UNITED STATES DISTRICT COURT
FOR THE DISTRICT OF MASSACHUSETTS

FREEDOM WIRELESS, INC.

Plaintiff,

- v. -

BOSTON COMMUNICATIONS GROUP, INC., ALLTEL CORPORATION, and DOES 1-20.

Defendants.

05 11062 EFH

Civil Action No.

RECEIPT # 64648
AMOUNT $ 250.00
SUMMONS ISSUED 3
LOCAL RULE 4.1 —
WAIVER FORM —
MCF ISSUED —
BY DPTY. CLK. M.P.
DATE 5/20/05

COMPLAINT FOR PATENT INFRINGEMENT

MAGISTRATE JUDGE

JURISDICTION AND VENUE

(1) This is a patent infringement action brought under the patent laws of the United States, 35 U.S.C. § 1 et seq. This action arises under the Patent Act, 35 U.S.C. § 271. This Court has original jurisdiction over the patent infringement claims in this action under 28 U.S.C. §§ 1331 and 1338(a).

(2) Venue is proper in this Court pursuant to 28 U.S.C. §§ 1391(b)-(c) and 1400(b). Defendant Boston Communications Group, Inc. ("BCGI") resides in the District of Massachusetts, and a substantial part of the events giving rise to the claims occurred in the District of Massachusetts.

PARTIES

(3) Plaintiff Freedom Wireless, Inc. ("Freedom") is a Nevada corporation with its principal place of business in Phoenix, Arizona.

(4) Upon information and belief, defendant Boston Communications Group, Inc. is a Massachusetts corporation with its principal place of business in Bedford, Massachusetts and is doing business in the State of Massachusetts and this judicial district.

(5) Upon information and belief, defendant Alltel Corporation ("Alltel") is a Delaware Corporation with its principal place of business in Little Rock, Arkansas and is doing business in the State of Massachusetts and this judicial district.

(6) Freedom is unaware of the true names and capacities, whether individual, corporate, associate, or otherwise, of defendants Does 1 through 20, inclusive, or any of them, and therefore sues these defendants, and each of them, by such fictitious names. Freedom will seek leave of Court to amend this Complaint when the identities of these defendants are ascertained.

FIRST CLAIM FOR RELIEF

(7) Freedom realleges and incorporates herein by reference each and every allegation contained in paragraphs (1) through (6) above, as though set forth at length.

(8) Freedom is the assignee and owner of United States Patent No. 5,722,067 (the "'067 patent") entitled "Security Cellular Telecommunications System," a copy of which is attached to this Complaint as Exhibit 1. The '067 patent was duly and legally issued by the United States Patent and Trademark Office on February 24, 1998.

(9) The '067 patent relates to, among other things, a novel cellular telecommunications system that allows pre-paid users to complete cellular telephone calls without the necessity of entering additional account codes and further allows account usage to be monitored in real time so that usage may be terminated upon exhaustion of a pre-paid account.

(10) Defendants are not licensed or otherwise authorized by Freedom to make, use, offer for sale, or sell any telecommunications system or method claimed in the '067 patent.

(11) Upon information and belief, defendants have been and are infringing the '067 patent by making, using, offering for sale, and selling pre-paid cellular programs and systems that utilize telecommunications systems and methods claimed in the '067 patent, including BCGI prepaid programs and systems.

(12) Upon information and belief, defendants are aiding and abetting, and actively inducing and contributing to infringement of the '067 patent by each other defendant and by nonparties.

(13) By reason of defendants' infringing activities, Freedom has suffered, and will continue to suffer, substantial damages, in an amount to be proven at trial.

(14) Defendants' acts complained of herein have damaged and will continue to damage Freedom irreparably. Freedom has no adequate remedy at law for these wrongs and injuries. Freedom is therefore entitled to an injunction restraining and enjoining defendants and their agents, servants, and employees, and all persons acting thereunder, in concert with, or on their behalf, from infringing the claims of the '067 patent.

(15) Upon information and belief, defendants' infringement has been and continues to be willful.

SECOND CLAIM FOR RELIEF

(16) Freedom realleges and incorporates herein by reference each and every allegation contained in paragraphs (1) through (15) above, as though set forth at length.

(17) Freedom is the assignee and owner of United States Patent No. 6,157,823 (the "'823 patent") entitled "Security Cellular Telecommunications System," a copy of which is

attached to this Complaint as Exhibit 2. The '823 patent was duly and legally issued by the United States Patent and Trademark Office on December 5, 2000.

(18) The '823 patent relates to, among other things, a novel cellular telecommunications system that allows pre-paid users to complete cellular telephone calls without the necessity of entering additional account codes and further allows account usage to be monitored in real time so that usage may be terminated upon exhaustion of a pre-paid account.

(19) Defendants are not licensed or otherwise authorized by Freedom to make, use, offer for sale, or sell any telecommunications system or method claimed in the '823 patent.

(20) Upon information and belief, defendants have been and are infringing the '823 patent by making, using, offering for sale, and selling pre-paid cellular programs and systems that utilize telecommunications systems and methods claimed in the '823 patent, including BCGI prepaid programs and systems.

(21) Upon information and belief, defendants are aiding and abetting, and actively inducing and contributing to infringement of the '823 patent by each other defendant and by nonparties.

(22) By reason of defendants' infringing activities, Freedom has suffered, and will continue to suffer, substantial damages, in an amount to be proven at trial.

(23) Defendants' acts complained of herein have damaged and will continue to damage Freedom irreparably. Freedom has no adequate remedy at law for these wrongs and injuries. Freedom is therefore entitled to an injunction restraining and enjoining defendants and their agents, servants, and employees, and all persons acting thereunder, in concert with, or on their behalf, from infringing the claims of the '823 patent.

(24) Upon information and belief, defendants' infringement has been and continues to be willful.

PRAYER FOR RELIEF

WHEREFORE, plaintiff Freedom prays for a judgment in favor of plaintiff and against defendants as follows:

(1) that defendants have infringed and are infringing United States Patent No. 5,722,067 and that such infringement is willful;

(2) that defendants have infringed and are infringing United States Patent No. 6,157,823 and that such infringement is willful;

(3) that defendants and their officers, agents, representatives, servants, and employees and all persons in active concert or participation with them be enjoined from continued infringement of United States Patent No. 5,722,067;

(4) that defendants and their officers, agents, representatives, servants, and employees and all persons in active concert or participation with them be enjoined from continued infringement of United States Patent No. 6,157,823;

(5) that defendants be ordered to pay Freedom its damages caused by defendants' infringement of United States Patent No. 5,722,067, and that such damages be trebled, together with interest thereon;

(6) that defendants be ordered to pay Freedom its damages caused by defendants' infringement of United States Patent No. 6,157,823, and that such damages be trebled, together with interest thereon;

(7) that this case be declared exceptional pursuant to 35 U.S.C. § 285 and that Freedom be awarded its reasonable attorneys' fees and costs; and

(8) that Freedom have such other and further relief as the Court deems just and proper.

JURY TRIAL DEMAND

Freedom demands a trial by jury on all issues so triable raised herein.

Respectfully submitted,

FREEDOM WIRELESS, INC.
By its attorneys,

Paul F. Ware, Jr., P.C. (BBO #516240)
John Kenneth Felter, P.C. (BBO #162540)
Douglas C. Doskocil (BBO #558949)
Goodwin Procter LLP
Exchange Place
Boston, MA 02109-2881

Of Counsel:

William Price
Marshall M. Searcy III
Erica P. Taggart
Quinn Emanuel Urquhart Oliver & Hedges, LLP
865 South Figueroa Street, 10th Floor
Los Angeles, CA 90017

Dated: May 20, 2005
LIBA/1549096.1

US005722067A

United States Patent [19]

Fougnies et al.

[11] Patent Number: 5,722,067

[45] Date of Patent: Feb. 24, 1998

[54] **SECURITY CELLULAR TELECOMMUNICATIONS SYSTEM**

[75] Inventors: **Douglas V. Fougnies; Dan B. Harned,** both of Tempe, Ariz.

[73] Assignee: **Freedom Wireless, Inc.,** Las Vegas, Nev.

[21] Appl. No.: **364,479**

[22] Filed: **Dec. 23, 1994**

[51] **Int. Cl.**[6] **H04Q 7/20**

[52] **U.S. Cl.** **455/406**; 455/408; 455/415; 379/114; 379/127

[58] **Field of Search** 379/58, 59, 60, 379/33.2, 144, 114, 115, 127; 455/33.1, 33.2, 406–411, 414, 415

[56] **References Cited**

U.S. PATENT DOCUMENTS

4,756,020	7/1988	Fodale	379/112
4,852,149	7/1989	Zwick et al.	379/67
4,860,341	8/1989	D'Avello et al.	379/91
5,046,088	9/1991	Margulies	379/211
5,127,040	6/1992	D'Avello et al.	379/58
5,233,642	8/1993	Renton	379/59
5,265,155	11/1993	Castro	379/112
5,274,802	12/1993	Altine	395/600
5,291,543	3/1994	Freese et al.	379/59
5,297,189	3/1994	Chabernaud	379/58
5,309,501	5/1994	Kozik et al.	379/58
5,321,735	6/1994	Breeden	379/58
5,327,144	7/1994	Stilp et al.	342/387
5,341,414	8/1994	Popke	379/142
5,353,335	10/1994	D'Urso	379/67
5,359,642	10/1994	Castro	379/121
5,440,621	8/1995	Castro	379/112
5,592,535	1/1997	Klotz	379/58

OTHER PUBLICATIONS

AT&T Technical Journal, Summer 1991; pp. 11–25, 44–57, and 72–84.

Proceedings of the IEEE, vol. 79, No. 1, Jan. 1991; pp. 7–20.

Primary Examiner—Dwayne Bost
Assistant Examiner—Nay Maung
Attorney, Agent, or Firm—Cahill, Sutton & Thomas P.L.C.

[57] **ABSTRACT**

A cellular telecommunications system having a security feature which allows only pre-authorized users no complete cellular telephone calls. The system and method recognizes a cellular radiotelephone's pre-programmed a pre-selected telephone number and a automated number identification code (ANI). The pre-selected telephone number is reserved to the pre-paid cellular telecommunications system. The cellular radiotelephone transmits the ANI and a dialed number identification system code (DNIS) to a cellular switch, which contacts a host computer for call validation the pre-paid service provider.

21 Claims, 6 Drawing Sheets

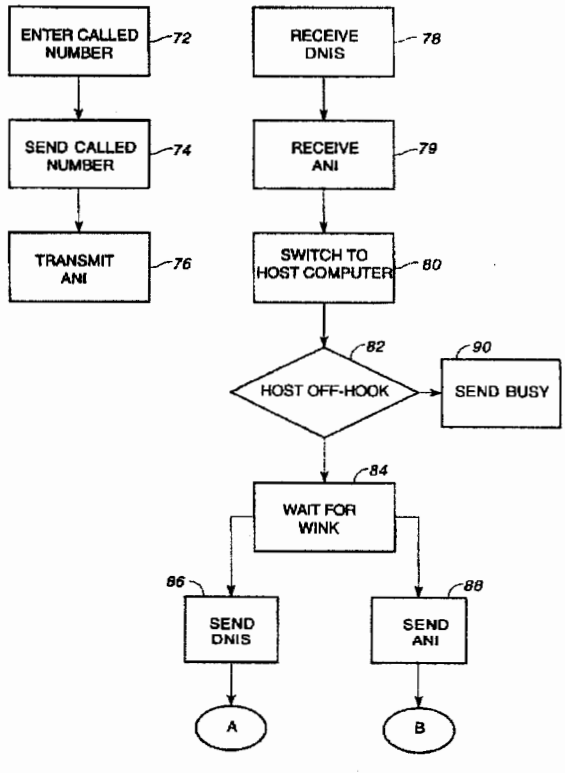

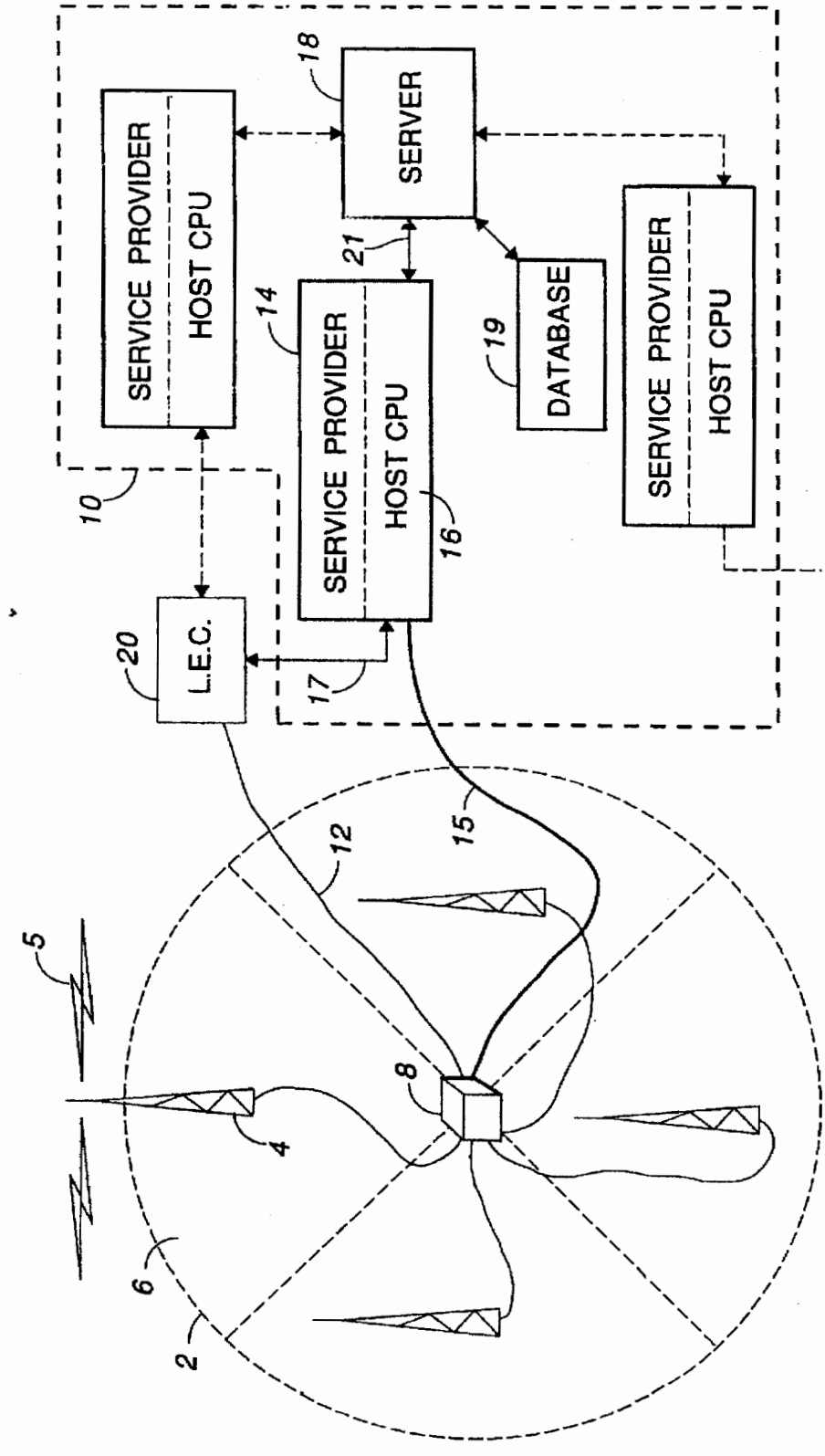
SERVICE PROVIDER
HOST CPU
18
SERVER
21
14
SERVICE PROVIDER
HOST CPU
19
DATABASE
SERVICE PROVIDER
HOST CPU
10
16
20
L.E.C.
17
12
15
5
8
4
6
2

FIG. 1

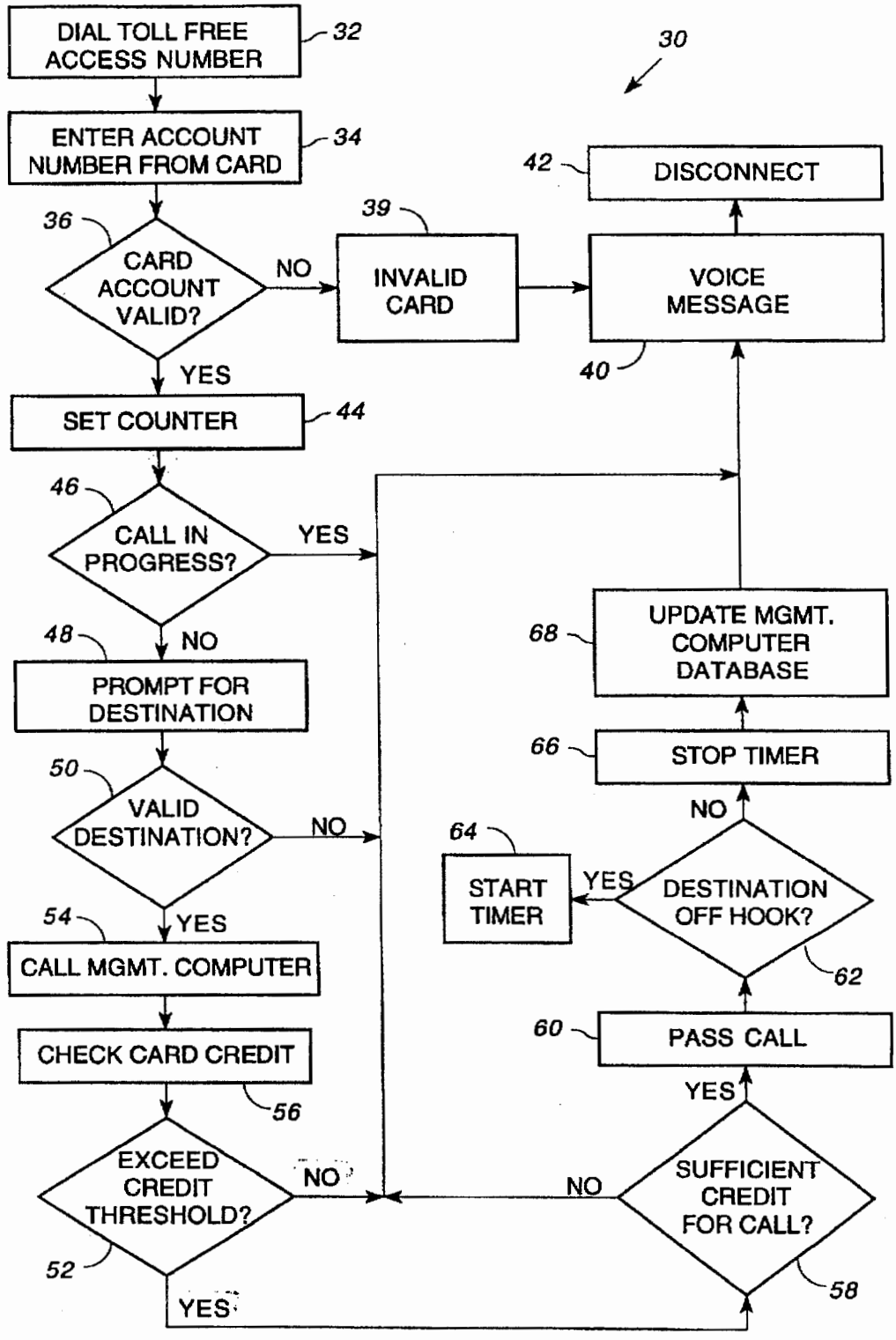

FIG. 2 (PRIOR ART)

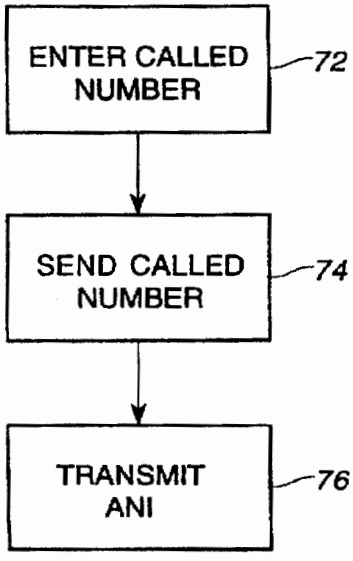
ENTER CALLED NUMBER
72
SEND CALLED NUMBER
74
TRANSMIT ANI
76

FIG. 3

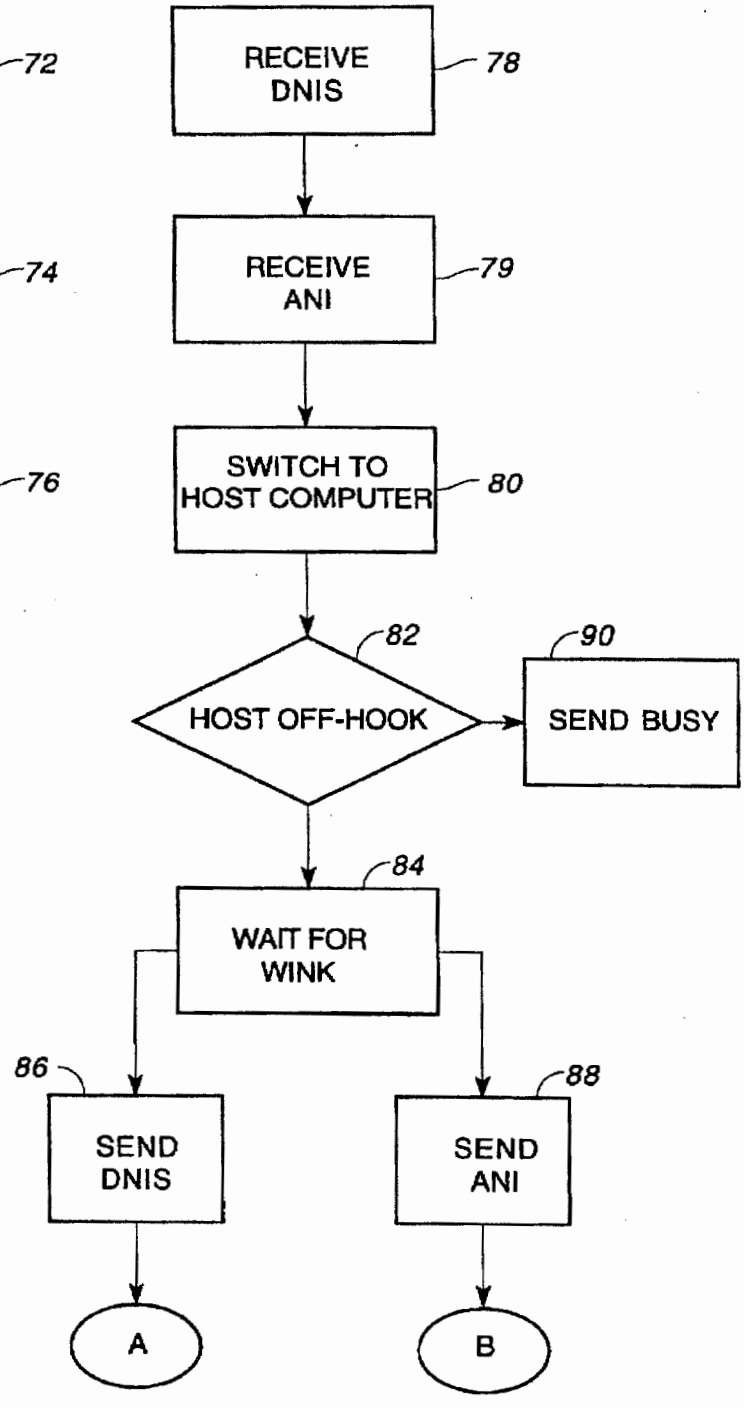
RECEIVE DNIS
78
RECEIVE ANI
79
SWITCH TO HOST COMPUTER
80
82
HOST OFF-HOOK
90
SEND BUSY
84
WAIT FOR WINK
86
SEND DNIS
88
SEND ANI
A
B

FIG. 4

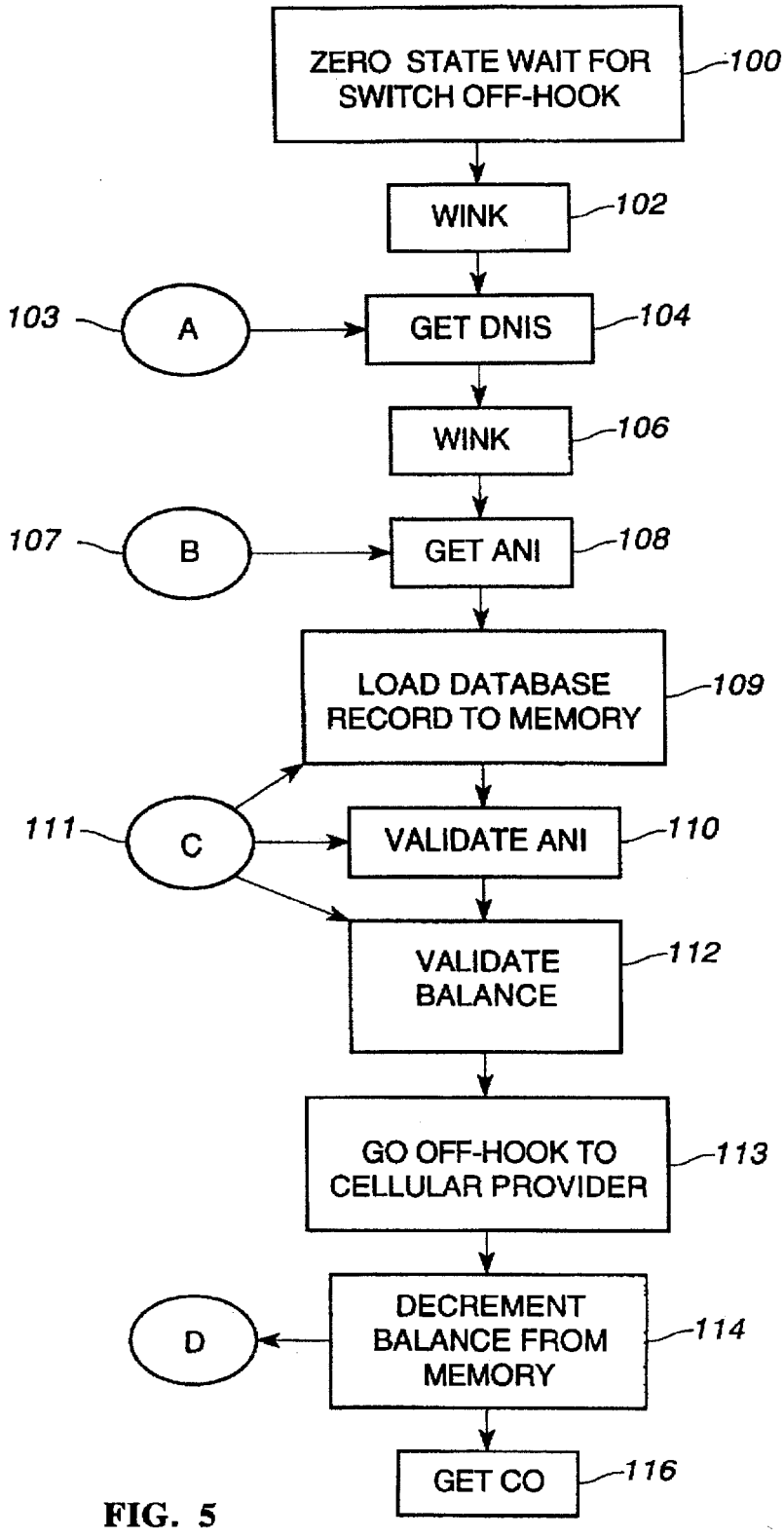
ZERO STATE WAIT FOR SWITCH OFF-HOOK
100
WINK
102
103
A
GET DNIS
104
WINK
106
107
B
GET ANI
108
LOAD DATABASE RECORD TO MEMORY
109
111
C
VALIDATE ANI
110
VALIDATE BALANCE
112
GO OFF-HOOK TO CELLULAR PROVIDER
113
D
DECREMENT BALANCE FROM MEMORY
114
GET CO
116

FIG. 5

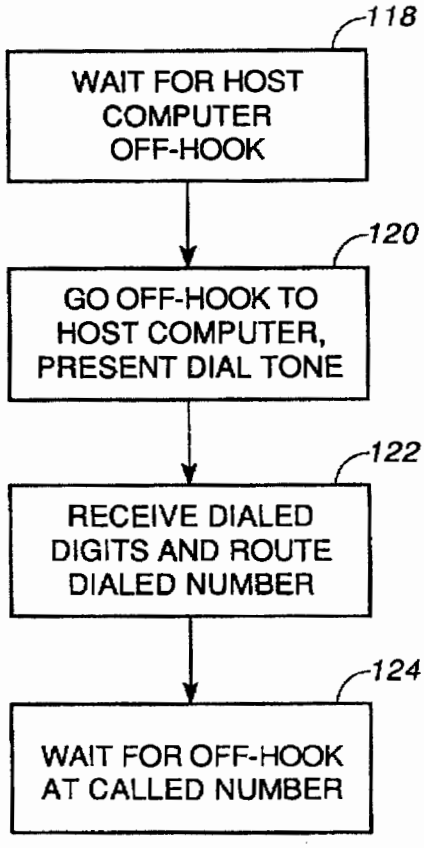
118
WAIT FOR HOST COMPUTER OFF-HOOK
120
GO OFF-HOOK TO HOST COMPUTER, PRESENT DIAL TONE
122
RECEIVE DIALED DIGITS AND ROUTE DIALED NUMBER
124
WAIT FOR OFF-HOOK AT CALLED NUMBER

FIG. 6

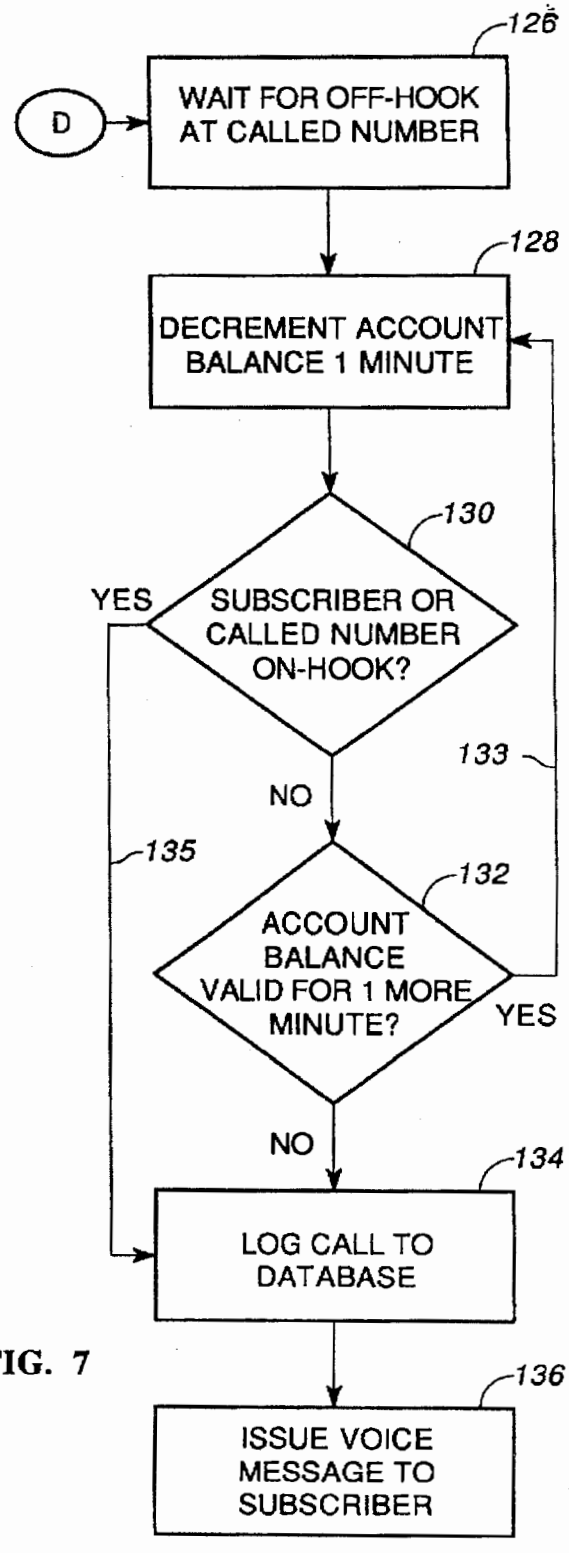
D
126
WAIT FOR OFF-HOOK AT CALLED NUMBER
128
DECREMENT ACCOUNT BALANCE 1 MINUTE
130
SUBSCRIBER OR CALLED NUMBER ON-HOOK?
YES
NO
133
135
132
ACCOUNT BALANCE VALID FOR 1 MORE MINUTE?
YES
NO
134
LOG CALL TO DATABASE
136
ISSUE VOICE MESSAGE TO SUBSCRIBER

FIG. 7

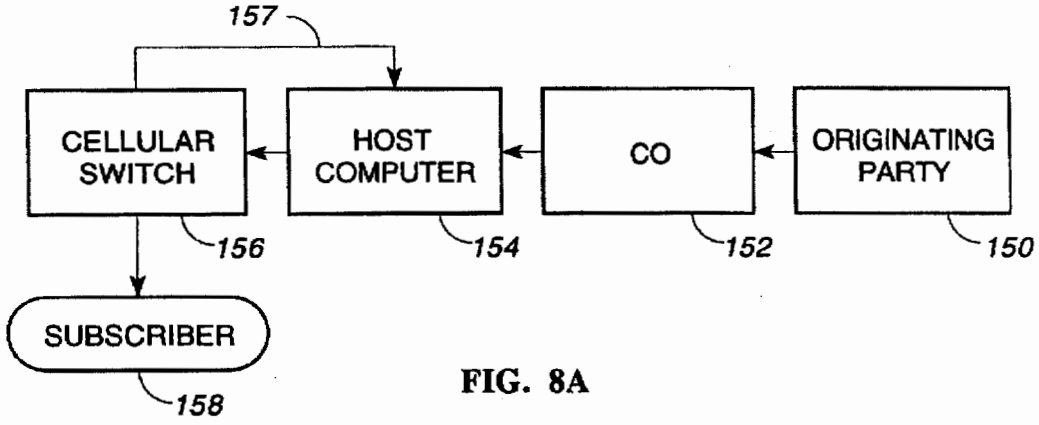
157
CELLULAR SWITCH
HOST COMPUTER
CO
ORIGINATING PARTY
156
154
152
150
SUBSCRIBER
158

FIG. 8A

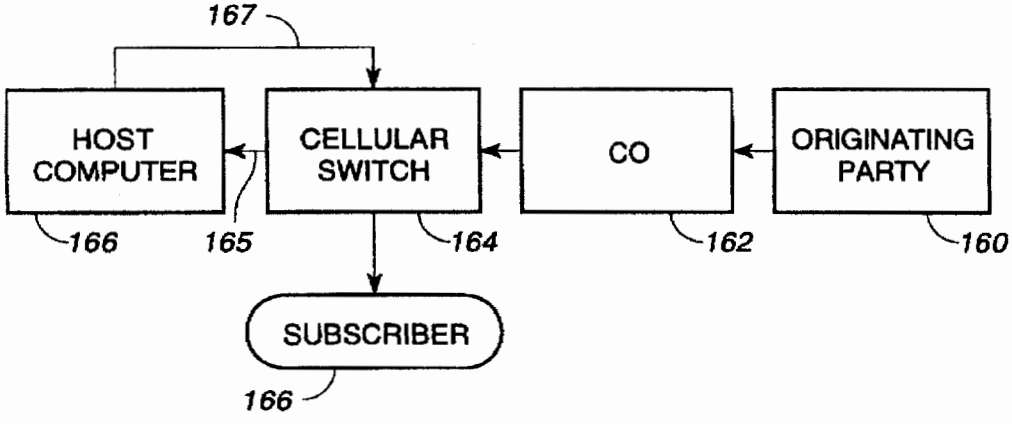
167
HOST COMPUTER
CELLULAR SWITCH
CO
ORIGINATING PARTY
166
165
164
162
160
SUBSCRIBER
166

FIG. 8B

SECURITY CELLULAR TELECOMMUNICATIONS SYSTEM

BACKGROUND OF THE INVENTION

The present invention relates generally to a cellular telecommunications system having a security feature which allows only pre-authorized users to complete cellular telephone calls. More particularly, the cellular telecommunications system of the present invention permits cellular telecommunications providers to obtain pre-paid subscribers and eliminate credit-risk problems. In addition, the present invention provides anti-fraud protection for cellular service providers by allowing subscribers to designate protection codes which must be dialed before a telecommunications event will be completed.

Conventional cellular telecommunications systems require the cellular provider to undertake credit screening and certify credit-worthy subscribers before enabling a user to access the cellular telecommunications system. Customarily, a potential subscriber will apply to the cellular service provider, who then undertakes a verification process to determine whether the potential subscriber is credit-worthy. If the potential subscriber has a positive credit rating, the subscriber is given access to the cellular system and is able to initiate or receive unlimited cellular telecommunications events during a certain period of time or during a certain number of billing cycles. If the subscriber regularly pays invoices for the telecommunications services, the subscriber's access to the telecommunications system continues unfettered. If the subscriber fails to pay invoices as they become due, the cellular service provider has the ability to discontinue the subscriber's access until the invoice is paid. Thus, pre-paid telecommunications access is a desirable feature to prevent fraudulent use of the telecommunications system. Additionally, the present invention provides anti-fraud capabilities by requiring that a pass-code or personal identification number (PIN) be dialed along with the called number before a telecommunications event will be completed.

Up to now, the cellular service provider had no means available to offer cellular telecommunications services on a pre-paid basis, monitor the subscriber's cellular telecommunications usage in real time and discontinue access to the cellular telecommunications services immediately upon exhaustion of a pre-paid account balance. Additionally, up to now, cellular service providers had no means available to prevent cellular theft by unscrupulous persons retrieving equipment serial numbers from cellular signal transmissions and "cloning" or reprogramming other cellular equipment to replicate a subscriber's telecommunications profile.

DESCRIPTION OF THE PRIOR ART

Land-based telecommunication systems have devised a method for allowing pre-paid telephone usage and limiting telecommunications usage to only a period of time equivalent to the pre-paid value. Perhaps the best example of such a land-based telecommunications system is found in U.S. Pat. No. 5,353,335 issued Oct. 4, 1994, to D'Urso (hereinafter the "D'Urso" patent).

The D'Urso patent discloses a public switched telephone network (PSTN) which operates on a pre-payment system and has multilingual capabilities. A telephone user purchases a predetermined quantum of service, i.e., telecommunications time before access and is provided a card imprinted with a unique account number. The user is also given a series of toll free, commonly Known as "1-800" number which

allows the user to access the prepaid telephone system. Activation of each of the toll free numbers causes the system described in the D'Urso patent to interact with the user in the user's native language or in a language which the user desires to interact with the telecommunications system. Upon dialing an appropriate toll free telephone number at a PSTN node, the user is connected through a switching system with a host computer. The host computer prompts the user, typically by digital voice commands, to enter the user's account number, using the PSTN node keypad, imprinted on the user's account card. The authenticity of the entered account number and the available amount of credit is determined by the host computer. Account authentication and credit balance checking is accomplished by local area network connection with a service management computer which manages a card database containing account information for each outstanding account card. If the account valid and an available balance is verified, the host computer prompts the user to enter a speed dialing alias or destination telephone number. The user is given a pre-set number of attempts to enter a valid alias or destination number. The system performs editing checks on the alias or destination number. Improper entry of a speed dialing alias or destination for the pre-set number of attempts will cause the host computer to disconnect the user. Upon proper entry of a speed dialing alias or destination number, the host computer compares the available card balance against the balance required to make a one minute phone call to the desired destination. If the available balance is greater than or equal to the balance required to make that one minute call, a voice response unit (VRU) plays an announcement in the user's chosen language informing the user that the call is being processed. The VRU computer uses a stored call rate associated with the caller's destination number and the available credit balance to determine the available call duration. A call duration timer is set in response to the determination of the available call duration.

The VRU computer is then directed to outpulse the digits of the destination number to a network node. When the host computer detects an off-hook condition from the destination, the call duration timer is started and the available call balance is depleted while the call is in progress. When the host computer detects that the available call balance is close to depletion, the VRU computer is bridged onto the call and plays a pending disconnect announcement in the users chosen language. Upon exhaustion of the call balance, the VRU plays a disconnect announcement, the call is disconnected and the host computer sends a message to the service management computer and database that the balance on the card is depleted.

Alternatively, if an on-hook condition at the destination occurs before the card balance is depleted, the host computer calculates the remaining available balance based upon the condition of the call timer and compares the computed balance to the minimum credit threshold. The host computer then causes a VRU computer to notify the caller, in the chosen language, whether the remaining balance exceeds the minimum credit threshold, and the value of the available balance and then disconnects the calling party. The host computer then sends an update message to the service management computer and the database, notifying them of the calculated remaining balance. The service management computer then overwrites the present balance in the database with the calculated balance sent by the host computer.

While the D'Urso telecommunications system allows for pre-paid telecommunications activity, it is wholly dependent upon user first calling a toll free number, inputting account

information, waiting for account validation, inputting the called destination, waiting for destination validation and then either being connected or not. The D'Urso system requires a plurality of input events by the user before a call can be passed to the destination. Moreover, the D'Urso system lacks direct interface with the remote database for real time account balance adjustment during a telecommunications event. Rather, in the D'Urso system a host computer queries a remote management server database to determine an available credit balance. The host computer then looks up a telecommunications rate for the destination number called, calculates a time value corresponding to the credit balance for the destination number and either authorizes or rejects the attempted call on the basis of the calculated time value. If the attempted call is authorized, a calculated tame value timer is set. Upon occurrence of an off-hook condition at the destination called, the calculate time value timer at the host computer is decremented until a pre-determined threshold value. As the threshold value is reached, a voice message is bridged onto the call to advise the user of the remaining calculated time value. Upon expiration of the calculated time value, the call is disconnected. After disconnection due to either 1) expiration of the calculated time value, or 2) an on-hook condition at the called desalination, the host computer re-calculates the credit balance from the remaining time value and sends an update record to the management server and database and overwrites the previous credit balance information stored at the database. In this manner, the database is not actively updated as the telecommunications activity is occurring.

Those skilled in the art will understand and appreciate that the prepaid land-based telecommunications system described in the D'Urso patent is fundamentally different from the cellular-based telecommunications system of the present invention.

SUMMARY OF THE INVENTION

A need has been recognized for a cellular telecommunications system which permits access by pre-paid users, without the need for modifying the cellular radiotelephones commonly in use. The present invention provides a system and method which recognizes cellular radiotelephones pre-programmed with a pre-selected telephone number and an automated number identification code (ANI). The pre-selected telephone number is reserved to the pre-paid cellular telecommunications system. The user merely enters the destination telephone number and activates an off-hook condition, typically by depressing a "send" button on the keypad of the cellular radiotelephone. The cellular radiotelephone then transmits the ANI and a dialed number identification system code (DNIS). Because all cellular systems operate on the basis of discrete cell sites, which re-transmit the received signal to a central cellular service organization cellular switch, both the ANI and the DNIS are transmitted to the cellular switch. At the cellular switch, the ANI is recognized as one reserved to the pre-paid cellular system and is re-directed, along with the DNIS, to the pre-paid cellular system switch via T1 land lines or via cellular re-transmission.

At the pre-paid cellular system switch, a host computer authenticates both the ANI and DNIS. Upon recognition of a valid ANI, the host computer establishes communications via either a local area network (LAN) or wide-area network (WAN) with a remote computer database server. At the remote computer database server, a database is maintained with pre-paid subscriber information. The pre-paid subscriber database contains records of each pre-paid subscriber. Each subscriber record in the database includes, at least the ANI assigned to that pre-paid subscriber, a pre-paid account balance and a time rate for telecommunications charges. The host computer validates the received ANI by comparison to the ANI information in the database. Upon validation of the received ANI, account balance information for the account associated with the received ANI is queried to determine if there is a positive credit balance. Upon verification that the account has a positive credit balance, the host computer outpulses the dialed destination telephone number to a local exchange carrier, such as one of the Regional Bell Operating Companies.

During the call progress, tile account balance information at the computer database server is decremented based upon elapse of pre-determined time periods at the predetermined time value for cellular telecommunications. It is important to note the time value is deducted from the account balance at regular intervals of time while the call is in progress.

The present invention allows a pre-paid user to access the cellular telecommunication system and have authentication and accounting occur transparently without any preliminary input by the user. The present invention accomplishes this by using the ANI as the file link to identify and authenticate the cellular telephone against the database. Thus, cellular telephone users are freed of the need to carry and use cards, are freed of the need to enter account information as a first step in the authentication process and the possibility of fraud on the cellular service providers is minimized.

These and other objects, features, and advantages of the present invention will become more apparent to those skilled in the art from the following more detailed description of the present invention when taken with reference to the accompanying drawings.

BRIEF DESCRIPTION OF THE DRAWINGS

FIG. **1** is a diagrammatic view of a typical cellular telecommunications system interfaced with the cellular telecommunications system of the present invention.

FIG. **2** is a diagrammatic call flow of the prior art pre-paid land-based telecommunications system.

FIG. **3** is a call flow diagram from a typical cellular radiotelephone.

FIG. **4** is a call flow diagram at a cellular switch in accordance with the present invention.

FIG. **5** is a flow diagram illustrating call validation processing at a host computer in accordance with the present invention.

FIG. **6** is a flow diagram illustrating call processing at the central office in accordance with the present invention.

FIG. **7** is a flow diagram illustrating call accounting processing at a host computer in accordance with the present invention.

FIG. **8A** is a flow diagram illustrating a first embodiment of incoming call processing in accordance with the present invention.

FIG. **8B** is a flow diagram illustrating a second embodiment of incoming call processing in accordance with the present invention.

DETAILED DESCRIPTION OF THE PREFERRED EMBODIMENTS

The prepaid cellular telecommunications system of the present invention is best illustrated with reference to the accompanying drawings in which FIGS. **1** and **3** through **8B**

generally describe the system of the present invention and FIG. 2 depicts the prior art system described in the D'Urso patent.

With particular reference to FIG. 1, the pre-paid cellular system 10 of the present invention is illustrated. The pre-paid cellular system 10 interfaces with a conventional cellular telecommunications switched network 2. Conventional cellular telecommunications switched network 2 is a network consisting of a plurality of cellular antenna, such as antenna 4, capable of receiving cellular band RF signals 5, with each antenna being located in a discrete cell site, such as site 6. Each antenna is electrically linked to cellular switch 8 which governs the operation of the cellular telecommunications switched network 2 and links the network 2 to local exchange carrier 20 via T1 land line 12.

In accordance with the present invention, a cellular service provider 14 is linked to the cellular telecommunications switched network 2 cellular switch 8 via T1 land lines 15. The cellular service provider 14 has a plurality of cellular telephone numbers reserved to it for pre-paid subscribers. Each reserved cellular telephone number has a unique automated number identifier (ANI) associated with the reserved telephone number. These reserved cellular telephone numbers are stored in a switch computer resident at switch 8. The cellular service provider 14 is electrically linked to the local exchange carrier 20 via T1 land lines 17 to communicate cellular telephone calls from the service provider 14 to the local exchange carrier's regular network.

The service provider 14 has host computer 16 which is preferably networked through either a local area network (LAN) or wide area network (WAN) 21 to a remote server computer 18. In this manner a plurality of service providers may, within a single cellular service, operate from the same remote server computer 18. The remote server computer 18 has an associated database 19 of pre-paid subscribers, which is independently accessible by each of the service providers.

The host computer is preferably based upon a multi-processor platform such as those made by Intel Corporation and based upon the 486 or PENTIUM microprocessor, with each host computer having a plurality of modems and network interface circuit boards capable of simultaneous bi-directional processing of telecommunications data between the T1 land lines 15 and the modems and between the host computer and the remote server. The remote server is also preferably a multi-processor based platform capable of distributed load processing, and fitted with a plurality of network interface circuit boards. The database is preferably stored across n plurality of hard disk drives configured as a redundant array of independent drives (RAID).

In the foregoing manner, a cellular transmission 5 received by an antenna 4 within a cell size 6 is received at switch 8. If the ANI and DNIS transmitted with the cellular transmission 5 is one of the reserved pre-paid cellular telephone numbers, the switch 8 re-directs the transmission 5 to the service provider via the T1 land line 15. The transmission 5 is communicated to the service provider's host computer 16, which then authenticates the ANI and DNIS by accessing the server computer 18 and database 19. Upon valid authentication of the ANI and DNIS, the subscriber identity is validated. The database 19 will have records indicative of the subscriber's account balance. A check of the subscriber's account balance in the database 19 is made to validate the presence of a pre-paid balance sufficient to supply a pre-determined quantum of telecommunications, e.g., one minute, at a predetermined telecommunications charge rate associated with both the dialed number and the time of day in which the call is placed. Upon account balance validation, the host computer 16 validates the call and passes it to the local exchange carrier 20 via the T1 land lines 17.

A pre-payment telecommunications system 30 of the prior art is illustrated with reference to FIG. 2. The system 30 requires that a pre-paid user first dial a toll free access number at block 32. Upon connection with the toll free access number, the user must enter an assigned account number imprinted on a card at block 34. After the card account number is validated at block 3G, a counter is set at block 44 and a check is made at block 46 to determine whether a call on the entered account is in progress. A negative validation at block 36 will cause an invalid card flag to be initiated at block 38 and an appropriate voice message from a voice response unit (VRU) announced at block 40. If an affirmative response is elicited from the check at block 46, the VRU prompts the user to enter a destination telephone number at block 48. A validation check is made at block 58 of the dialed number entered in response to the VRU prompt at block 48. If the validation check at block 50 is affirmative, a database associated with a management computer is called at block 54 and the account's records are retrieved for credit balance determination. A check is made of the credit associated with the card account to determine whether the user's account has any available credit at block 56 and whether the available credit exceeds a pre-determined minimum threshold at block 52. An additional check is made to determine whether sufficient credit in the user's account balance to pay for a threshold time value of a call, e.g., one minute, based upon a time value rate for the destination being called is determined at block 58. If the determinations made at blocks 52, 56 and 58 are affirmative the call is passed by outpulsing the dialed number at block 50. If a negative determination at any of blocks 52, 56 or 58 is made, an appropriate voice message is played by the VRU at block 40 and the user is disconnected at block 42.

Upon connection with the destination number, an off-hook condition of the destination is sensed at block 62. If an off-hook condition exists at the destination, a timer is started at block 64 which continues until art on-hook condition exists at the destination and the timer is stopped at block 66. Upon a stop timer condition at block 66, the management computer is called and updated by overwriting the user's account record with updated information based upon the elapsed time of the call and the time value of the call at block 68. The VRU then issues an appropriate voice message 40 to advise the user of the revised account balance and the user is disconnected at block 42.

As will be understood by those skilled in the art, the foregoing description of the pre-paid telecommunications system of the prior art 30 requires the user to first access a toll-free number to be linked to a host computer, and then must enter an account code and wait for validation and then enter a destination number, and wait for validation before the call is passed. The present invention operates advantageously with a cellular telecommunications system to eliminate the need for a toll free host computer to interact directly with the user, and eliminate the need for the pre-paid user to make multiple keypad entries. Rather, as will be more apparent from the following description of the preferred embodiment, the user only enters the destination number and all call processing is handled by the host computer in conjunction with the cellular switch.

Turning now to FIGS. 3–3B, call flow in the pre-paid cellular telecommunications system of the present invention is illustrated. It is important to note that the cellular radio-

telephones used by pro-paid subscribers are of a conventional type, without special circuitry, modification or programming. Rather, each cellular radiotelephone used by pre-paid subscribers is programmed, in the normal manner, with a pre-defined cellular telephone number reserved to the pre-paid cellular telecommunications system **10**.

FIG. **3** illustrates call initiation by a pro-paid cellular telecommunications subscriber. The subscriber initiates a cellular call at block **72** by entering the destination number directly at the keypad of the cellular radiotelephone. After the subscriber enters the called number, the subscriber sends the destination number (DNIS) by activating a send key on the keypad of the cellular radiotelephone at block **74**. The cellular radiotelephone then transmits the DNIS and an ANI unique to the transmitting cellular radiotelephone at block **76** as cellular signals **5** to the nearest antenna within the cell site.

FIG. **4** illustrates call processing by the cellular switch **8**. The cellular switch **8** is constantly in a wait condition for receipt of cellular transmissions from a plurality of subscribers within the coverage area of the cellular switch. The cellular switch receives the transmitted DNIS at block **78** and the transmitted ANI at block **79**. Upon recognition of the ANI as a unique ANI identifying a subscriber in the inventive pre-paid cellular system, the cellular switch routes the cellular call through a direct line to a host computer of the inventive cellular system at block **80** and goes off-hook to the host computer at block **82**. The cellular switch then waits for receipt of a wink signal at block **84**. Upon receipt of a first wink signal at block **84**, the cellular switch sends the DNIS to the host computer at block **86**. Upon receipt of a second wink signal at block **84**, the cellular switch sends the ANI to the host computer at block **88**. Those skilled in the art will understand that the sequential order of sending the DNIS and ANI may be reversed. After sending the DNIS and ANI, the cellular switch waits for an off-hook condition from the host computer to connect the call. If the host computer fails to go off-hook within a pre-determined period of time, the cellular switch drops the caller.

Call processing at the host computer is illustrated in FIG. **5**. The host computer's initiated zero state is to wait for a cellular switch off-hook condition to the host Upon receipt of an off-hook condition from the cellular switch, the host computer sends a first wink signal to the cellular switch at block **102** which tells the cellular switch to send the DNIS. The host computer then receives the DNIS **103** from the cellular switch at block **104**. After receiving the DNIS at block **104**, the host computer sends a second wink signal to the cellular switch at block **106** which tells the cellular switch to send the ANI. The host computer then receives the ANI **107** from the cellular switch at block **108**. The host computer accesses the subscriber database from the remote server **11** and loads the database record corresponding to the received ANI to memory at block **109**. The received ANI is validated against the database record in memory as one belonging to a pre-paid subscriber at block **110**. Upon ANI validation at block **110**, the host computer then validates the subscriber's pre-paid balance based upon the DNIS and time of day rate, e.g., peak or off-peak time rates, at block **112**.

Those skilled in the art will understand and appreciate that the processing of the DNIS and ANI signals may occur in reverse order, and that different cellular service providers may use alternative signals to represent the dialed number and the subscriber's cellular radiotelephone. For example, the cellular radiotelephone's electronic serial number (ESN) may be transmitted instead of the ANI. The ANI is referenced, herein only by way of example.

Upon balance validation at block **112**, the host computer goes off-hook to the cellular provider at block **113** and a pre-determined minimum time rate is decremented from the subscriber's balance in memory at block **114** and then the call accounting loop is initiated at block D. While at present time, it is preferable to use memory, those skilled in the art will understand that future improvements in LAN and WAN communication speeds and database read-write speeds may obviate the desirability of loading the account balance to memory to facilitate subsequent call accounting processing. The host computer then outpulses the DNIS, or another host computer-qualified signal including the called telephone number, such as a pass-code or PIN number, or the DNIS stripped of the area code, to the local exchange carrier for connection at block **98** to obtain a central office (CO) line.

Turning now to FIG. **6**, the CO is in a zero state waiting for an off-hook from the host computer at block **118**. Upon an off-hook condition from the host computer at block **118**, the CO goes off hook to the host computer and presents a dial tone at block **120**. After the T1 land line has been seized, the DNIS or a host-computer modified DNIS, is received and routed over the T1 land line to the number dialed out by the host computer at block **122**. The CO then waits for an off-hook condition at the called telephone number at block **124** and connects the call.

Immediately upon occurrence of an off-hook condition at the called number, the call accounting flow illustrated in FIG. **7** is executed. While the CO negotiates and seizes a T1 line from the local exchange carrier, the host computer waits at block **126** for an off-hook condition at the called number. Immediately upon occurrence of an off-hook condition at the called number, the account balance in memory is decremented by a predetermined value, corresponding to a minimum time rate based upon the DNIS and the time of day rate, e.g., $0.02 for each six seconds of telecommunications time at an off-peak, i.e., after 7:00 p.m. local time. Thus, for example, immediately upon occurrence of an off-hook condition at the destination number, a minimum time value of one minute is decremented from the account balance resident in memory.

In accordance with the preferred embodiment of the present invention, the account balance read into memory is translated to a time value based upon the called number (DNIS) and the time of day rate applicable. In this manner, the account balance is converted to a time value, e.g., number of seconds or number of minutes, and the time value is decremented based upon elapse of pre-determined time periods while either the subscriber's cellular telephone or the called number are off-hook.

After the elapse of a time period equal to the pre-determined minimum time value, the account balance is queried at block **132** to determine if there is a sufficient account balance for an additional quantum of the minimum time value. If a sufficient account balance is determined to exist at block **132**, the process loops back **133** and decrements the account balance by the pre-determined minimum time value at block **128**. Process loop **133** continues to execute until either the subscriber or the called number are on-hook at block **130** or until a negative response issues to the account balance validation at block **132**. If either an on-hook condition at the subscriber or the called party at block **130** or the account balance is not validated at block **132**, a disconnection occurs, accounting ceases and the call, including the DNIS and the elapsed time of the call are logged to the database resident at the remote server (not shown) and the remaining account balance is written to the database at block **134**. The system then bridges to a voice

response unit and issues a voice message to the subscriber advising the subscriber of the remaining account balance at block **136**. Where it is technically feasible to decrement the account balance directly from the database, without loading the account balance to memory at the host computer, those skilled in the art will understand that the step of writing the adjusted account balance to the database may not be a necessary step.

The foregoing describes the call handling process for outgoing calls from a cellular subscriber. In those cellular service areas where the cellular service is offered only on a "calling party pays" basis, there is no need to monitor or control telecommunications events incoming to the subscriber. However, in those cellular service areas where cellular service is offered on the basis that the subscriber pays telecommunication charges irrespective of whether the subscriber is originating or receiving a call, the present system provides a method for monitoring and controlling incomming cellular telephone calls to the pro-paid subscriber and adjusting the pre-paid subscriber's account balance for incomming calls.

FIGS. **8**A and **8**B illustrate alternative embodiments of the system adapted to monitor and control incoming calls to a pre-paid cellular service provider. It must be understood that the operation and construction of the cellular swatch, host computer, CO and local exchange carrier are identical to that for outgoing calls made by the pre-paid subscriber. The principal difference is, however, in the sequence of events which occur to activate the call accounting and control functions of the inventive cellular telecommunications system.

We turn now specifically to FIG. **8**A which illustrates a first embodiment of the inventive pre-paid cellular telecommunications system. In FIG. **8**A, an originating party initiates a land line telephone call at block **150**. The initiated call consists of the pre-paid subscriber's telephone number unique to the pre-paid cellular system. The call is handed to a co at block **152** and redirected to the host computer based upon the dialed number matching a pre-paid subscriber's telephone number. The host computer is initialized in a wait for CO off-hook state and waits for an incomming off-hook signal from the CO at block **154**. Upon receiving an incoming call at block **154**, the host computer validates the dialed number against the pre-paid subscriber database and determines whether a sufficient account balance exists for the pre-determined minimum time value for a telecommunications event, as described above with reference to FIG. **7**. Upon validation of the dialed number and the available account balance, the host computer outpulses the dialed number to the cellular switch **156** which routes the call to the cellular subscriber at block **158**. Upon occurrence of an off-hook condition at the cellular subscriber at block **158**, the cellular switch returns **157** the off-hook condition to the host computer and call accounting as described above with reference to FIG. **7** occurs.

In accordance with a second embodiment for incoming call handling in accordance with the present invention, and as illustrated in FIG. **8**B, the originating party at block **160** and the CO at block **162** function identically as described above with reference to FIG. **8**A. However, in this second embodiment, the CO outpulses the mobile identifier directly to the cellular switch at block **164**, and the cellular switch passes **165** the mobile identifier to the host computer at block **166** to enable the host computer to validate both the mobile identifier and the available balance. Upon such validation, the host computer at block **166** directs the cellular switch to pass the call to the subscriber at block **168**. Again, upon occurrence of an off-hook condition at the subscriber, the, host computer executes call accounting as previously described with reference to FIG. **7**.

Thus, in the present invention, the disadvantages of the prior art are overcome, particularly as those disadvantages would affect a cellular user. By eliminating the need for the user to make unnecessary dialing entries and limit the user's dialing entry only to the destination number the present invention represents a valuable and needed advance in the art. Additionally, by using the ANI to identify the subscriber, rather than the situs of the call, the present invention provides for transparent call processing for the end-user and achieves a fraud tolerance level not presently available to service providers.

While the invention has been described with reference to its preferred embodiments, those skilled in the art will understand and appreciate from the foregoing that variations in equipment, operating conditions and configuration may be made and still fall within the spirit and scope of the present invention which is to be limited only by the claims appended hereto.

What is claimed is:

1. A method of cellular telecommunications, comprising the steps of:

(a) establishing a pre-paid subscriber account balance linked to a pre-determined cellular telephone number assigned to a subscriber;

(b) writing the established pre-paid subscriber account balance to a database;

(c) initiating a cellular telecommunications event, by a subscriber, by the subscriber entering a dialed call destination number and transmitting the dialed call destination number as a dialed number identification system (DNIS) code and transmitting an automated number identification code (ANI) uniquely identified with a subscriber's cellular radiotelephone;

(d) receiving the DNIS and ANI at a cellular switch, the cellular switch recognizing the ANI as belonging to a pre-paid subscriber;

(e) sending an off-hook signal from the cellular switch to a host computer;

(f) the host computer serially sending a first signal to the cellular switch to obtain the DNIS signal therefrom, receiving the first signal, sending a second signal to the cellular switch to obtain the ANI signal therefrom, and receiving the second signal at the host computer;

(g) establishing communication between the host computer and a remote server computer, the remote server computer being in communication with the subscriber database, and validating the ANI received from the cellular switch as belonging to a subscriber;

(h) validating existence of a pre-determined subscriber account balance in the subscriber database based upon the DNIS and the time of day of the telecommunications event;

(i) establishing communications between the host computer and a local exchange carrier to obtain an available telecommunications line and sending the DNIS only if an affirmative validation at step (h) occurs;

(j) checking for an off-hook condition at the DNIS destination and, upon occurrence thereof, decrementing the subscriber account balance at regular intervals during the telecommunications event until an on-hook condition exists as the DNIS destination; and

(k) disconnecting the telecommunications event at the host server upon occurrence of a negative validation at step (h) or an on-hook condition exists at step (j).

2. A cellular telecommunications system for pre-paid subscribers, said system comprising:

(a) a plurality of cellular telephones, each cellular telephone being capable of transmitting an automated number identification code (ANI);

(b) a cellular switch in communication with said plurality of cellular telephones;

(c) a local exchange carrier;

(d) a pre-paid service provider including

(1) a host computer for providing pre-paid cellular service, said host computer being coupled to said local exchange carrier via switched lines and being coupled to said cellular switch via unswitched lines;

(2) a server computer coupled to and remote from said host computer, said server computer including a database containing a plurality of records identified by ANI and representing the accounts of pre-paid subscribers, each of which accounts contains information on the balance in the account; and

(3) means in said host computer for receiving a signal indicative of a pending call from said cellular switch and for forwarding the call to the local exchange carrier after confirming that the balance in the account corresponding to the ANI is greater than a predetermined minimum,

whereby said cellular switch forwards calls from the pre-paid subscribers to said pre-paid service provider via said unswitched lines.

3. The cellular telecommunications system of claim 2, wherein said host computer communicates with said local exchange carrier and said cellular switch over land-lines.

4. The cellular telecommunications system of claim 2 wherein said server computer and said host computer communicate over a local area network.

5. The cellular telecommunications system of claim 2, wherein said server computer and said host computer communicate over a wide area network.

6. The cellular telecommunications system of claim 2, wherein said database is contained in a redundant array of mass storage devices.

7. The cellular telecommunications system of claim 2, wherein said host computer includes a memory for storing subscriber account information from the database and wherein said host computer includes means revising the subscriber account information during call after connection with a dialed number.

8. The cellular telecommunications system of claim 7, wherein said host computer includes means for sending revised subscriber account information from said memory to said server computer and wherein said server computer updates the database after receipt of the revised subscriber account information.

9. The cellular telecommunications system of claim 2, wherein

said receiving and forwarding means in said host computer terminates a call when the balance in the account corresponding to the ANI is not greater than the predetermined minimum.

10. A method for pre-paid cellular telephone service, said method comprising the steps of:

forwarding to a pre-paid switching system a dialed number identification system code (DNIS) and an automated number identification code (ANI) representing a call from a cellular telephone;

at the pre-paid switching system, verifying a positive balance in an account identified by the ANI;

forwarding the call to an LEC; and

decrementing the balance in the account at regular intervals during the call until the call is terminated or until the balance is no longer positive, whichever occurs first.

11. The method as set forth in claim 10 wherein said verifying step includes the steps of:

finding the ANI; and

retrieving a balance associated with the ANI.

12. The method as set forth in claim 11 including a database of ANIs remote from the pre-paid switching system and said finding step includes the step of:

accessing the database via a remote server.

13. The method as set forth in claim 12 wherein said accessing step includes the step of:

sharing access to the database with other pre-paid switching systems.

14. The method as set forth in claim 10 and including the step of:

terminating the call when the balance in the account becomes zero.

15. A method for pre-paid cellular telephone service, said method comprising the steps of:

receiving an automated number identification code (ANI) representing a call at a cellular switch;

at the cellular switch checking the ANI against each stored reserved pre-paid cellular telephone number identifying a pre-paid subscriber; and

if the ANI is found in the stored reserved pre-paid cellular telephone numbers, then forwarding the call directly to a pre-paid service provider.

16. A method as set forth in claim 15 and further including the steps

at the pre-paid service provider, verifying a positive balance in an account associated with the ANI that was received from the cellular switch;

forwarding the call to a telecommunication service provider; and

decrementing the balance in the account at regular intervals during the call until the call is terminated.

17. The method as set forth in claim 16 wherein said decrementing step continues until the call is terminated or until the balance in the account becomes zero.

18. The method as set forth in claim 16 and including the step of:

terminating the call when the balance in the account becomes zero.

19. The method as set forth in claim 16 wherein said verifying step includes the steps of:

validating the existence of the ANI against the reserved pre-paid cellular telephone numbers; and

retrieving a balance in an account associated with the stored ANI.

20. The method as set forth in claim 19 wherein the reserved pre-paid cellular telephone numbers are stored in a database remote from the pre-paid service provider and said checking step is preceded by the step of:

accessing the database via a remote server.

21. The method as set forth in claim 20 wherein said accessing step includes the step of:

sharing access to the database with other pre-paid service providers.

* * * * *

US006157823A

United States Patent [19]

Fougnies et al.

[11] Patent Number: 6,157,823

[45] Date of Patent: *Dec. 5, 2000

[54] **SECURITY CELLULAR TELECOMMUNICATIONS SYSTEM**

[75] Inventors: **Douglas V. Fougnies; Dan B. Harned,** both of Tempe, Ariz.

[73] Assignee: **Freedom Wireless, Inc.,** Las Vegas, Nev.

[*] Notice: This patent is subject to a terminal disclaimer.

[21] Appl. No.: **09/009,199**

[22] Filed: **Jan. 20, 1998**

Related U.S. Application Data

[63] Continuation of application No. 08/364,479, Dec. 23, 1994, Pat. No. 5,722,067.

[51] **Int. Cl.**[7] **H04M 11/00**

[52] **U.S. Cl.** **455/406**; 455/408; 455/415; 379/114; 379/127

[58] **Field of Search** 455/403, 405, 455/406, 407, 408, 409, 410, 411, 426; 379/112, 113, 114, 120, 121, 127, 128, 144, 130; 380/247, 248, 271; 235/380, 382, 382.5

[56] **References Cited**

U.S. PATENT DOCUMENTS

4,706,275	11/1987	Kamil .	
4,756,020	7/1988	Fodale	379/112
4,776,000	10/1988	Parienti .	
4,776,003	10/1988	Harris .	
4,831,647	5/1989	D'Avello et al. .	
4,845,740	7/1989	Tokuyama et al. .	
4,852,149	7/1989	Zwick et al.	379/67
4,860,341	8/1989	D'Avello et al.	379/91
5,046,088	9/1991	Margulies	379/211
5,127,040	6/1992	D'Avello et al.	379/58
5,138,650	8/1992	Stahl et al. .	
5,144,649	9/1992	Zicker et al. .	
5,233,642	8/1993	Renton	379/59
5,265,155	11/1993	Castro	379/112
5,274,802	12/1993	Altine	395/600
5,291,543	3/1994	Freese et al. .	
5,297,189	3/1994	Chabernaud	379/58
5,301,223	4/1994	Amadon et al. .	

(List continued on next page.)

OTHER PUBLICATIONS

AT&T Technical Journal, Summer 1991; pp. 11–25, 44–57, and 72–84.

Proceedings of the IEEE, vol. 79, No. 1, Jan. 1991; pp. 7–20.

Bond, "Cellular Carriers Use Prepaid Programs to Reach Untapped Markets," Billing World, Mar. 1997, pp. 14–17.

Freedom Wireless, "The Freedom to Choose! Get Pre–Pay Cellular," sales pamphlet, undated.

MultiMedia Publishing Corp., "Prepaid Cellular and Prepaid Wireless Market Report and Forecast 1997–2002," sales literature, undated.

NEXTLINK, "Introducing a New Prepaid Telephone Service from NEXTLINK," sales literature, undated.

Open Development Corp., "openMEDIA Cellular Prepaid," sales literature, undated.

Tecore, Inc., "Pre–Paid Cellular", sales literature, Mar. 25, 1997, pp. 1–4.

"Testimony of Scott Silvey, CAL PUC Docket 1.88–11–040" (Aug. 30, 1991).

CSI Switch to Radio–Based Cellular Carriers, LEC & IXC Interconnections (undated).

Primary Examiner—Nay Maung

Attorney, Agent, or Firm—Fish & Richardson PC

[57] **ABSTRACT**

A cellular telecommunications system having a security feature which allows only pre-authorized users to complete cellular telephone calls. The system and method recognizes a cellular radiotelephone's pre-programmed a pre-selected telephone number and a automated number identification code (ANI). The pre-selected telephone number is reserved to the pre-paid cellular telecommunications system. The cellular radiotelephone transmits the ANI and a dialed number identification system code (DNIS) to a cellular switch, which contacts a host computer for call validation by the pre-paid service provider.

59 Claims, 6 Drawing Sheets

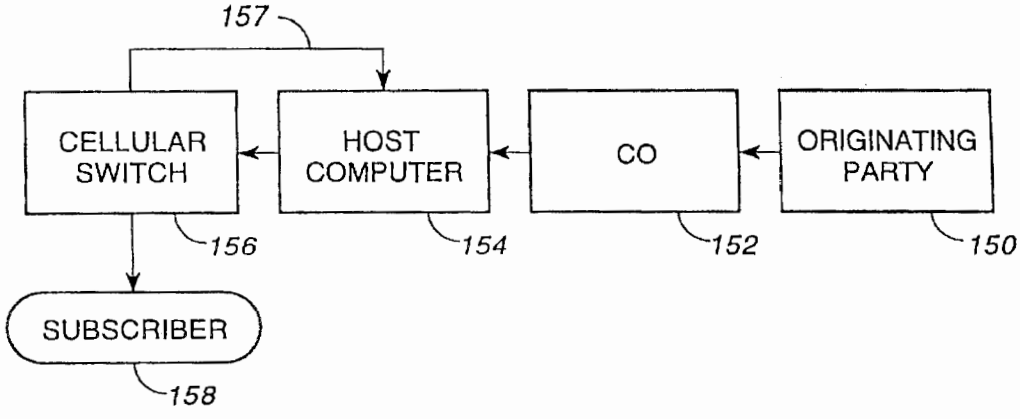

U.S. PATENT DOCUMENTS

5,301,234	4/1994	Mazziotto et al. .	
5,309,501	5/1994	Kozik et al.	379/58
5,321,735	6/1994	Breeden	379/58
5,327,144	7/1994	Stilp et al.	342/387
5,341,414	8/1994	Popke	379/142
5,353,335	10/1994	D'Urso	379/67
5,359,182	10/1994	Schilling .	
5,359,642	10/1994	Castro	379/121
5,440,621	8/1995	Castro	379/112
5,469,497	11/1995	Pierce et al. .	
5,509,056	4/1996	Ericsson et al. .	
5,517,555	5/1996	Amadon et al. .	
5,517,559	5/1996	Hayashi et al. .	
5,579,376	11/1996	Kennedy, III et al. .	
5,592,535	1/1997	Klotz .	
5,722,067	2/1998	Fougnies et al. .	
5,732,346	3/1998	Lazaridis et al.	455/406
5,778,313	7/1998	Fougnies .	
5,790,636	8/1998	Marshall .	
5,826,185	10/1998	Wise et al. .	
5,854,975	12/1998	Fougnies et al.	455/408
5,940,755	8/1999	Scott	455/426
6,029,062	2/2000	Hanson	455/408

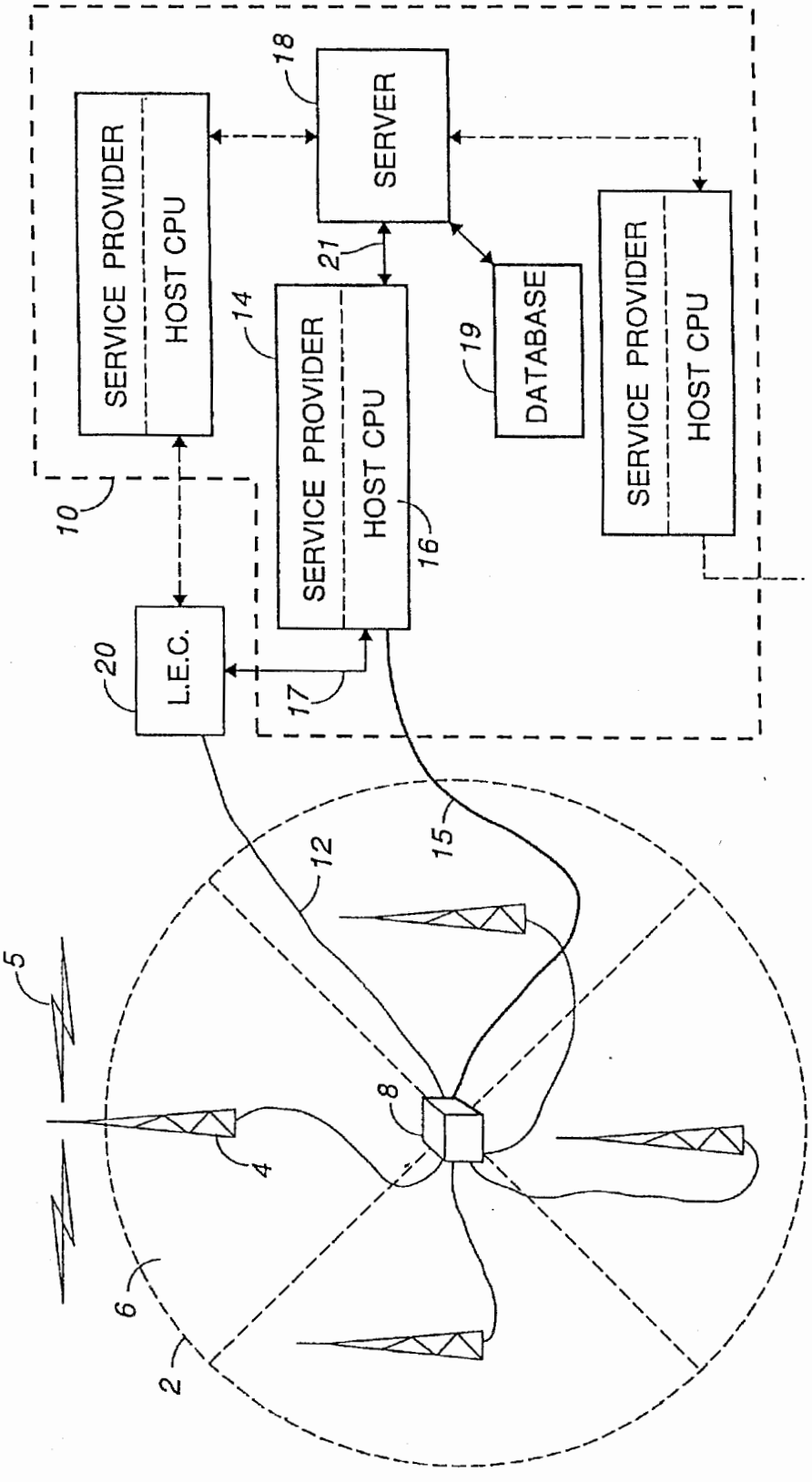
SERVICE PROVIDER
HOST CPU
18
SERVER
21
14
SERVICE PROVIDER
HOST CPU
19
DATABASE
SERVICE PROVIDER
HOST CPU
10
16
20
L.E.C.
17
12
15
5
8
4
6
2

FIG. 1

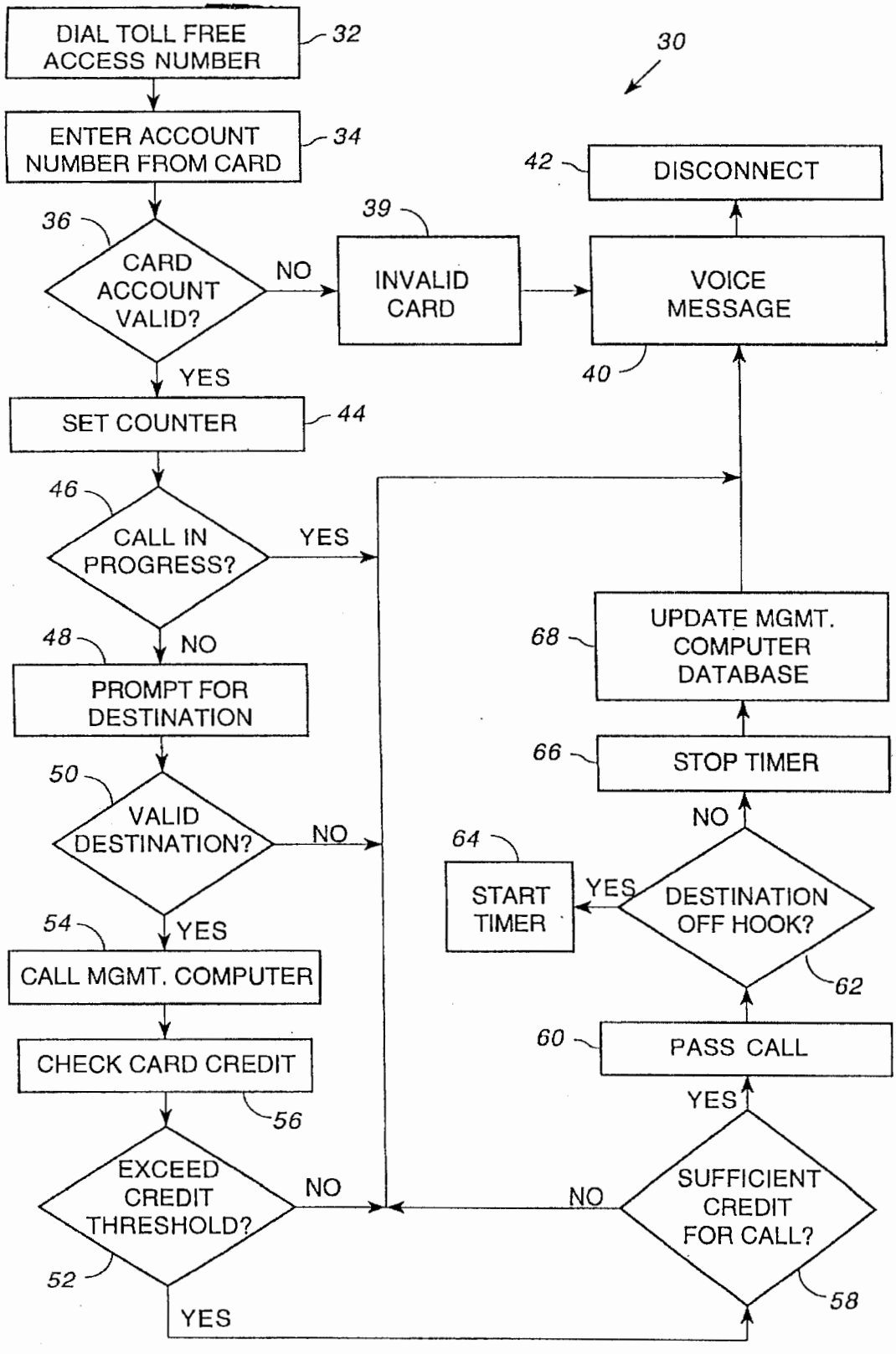

FIG. 2 (PRIOR ART)

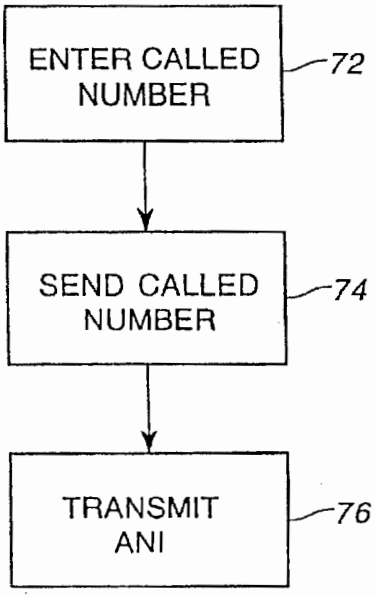
ENTER CALLED NUMBER
72
SEND CALLED NUMBER
74
TRANSMIT ANI
76

FIG. 3

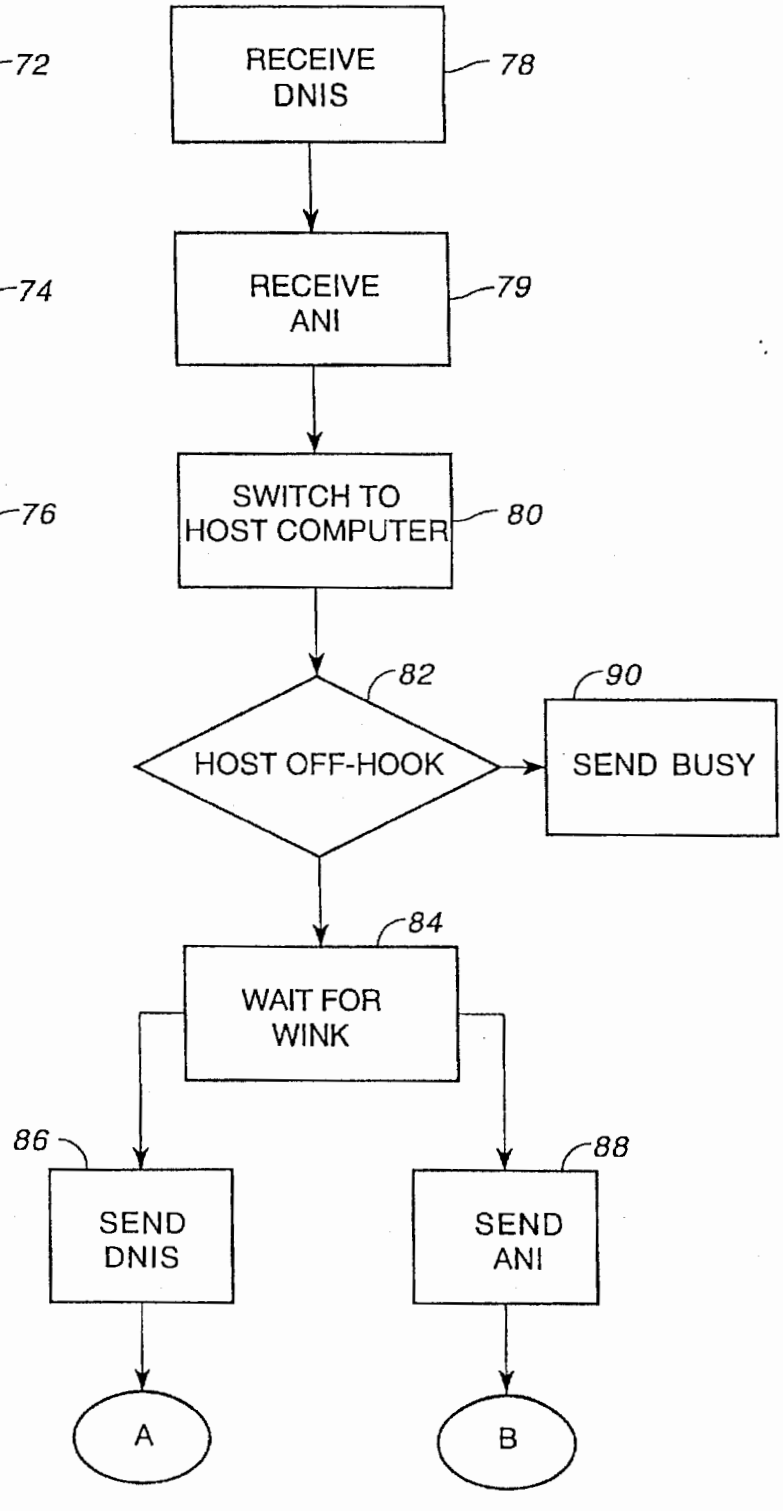
RECEIVE DNIS
78
RECEIVE ANI
79
SWITCH TO HOST COMPUTER
80
82
HOST OFF-HOOK
90
SEND BUSY
84
WAIT FOR WINK
86
SEND DNIS
88
SEND ANI
A
B

FIG. 4

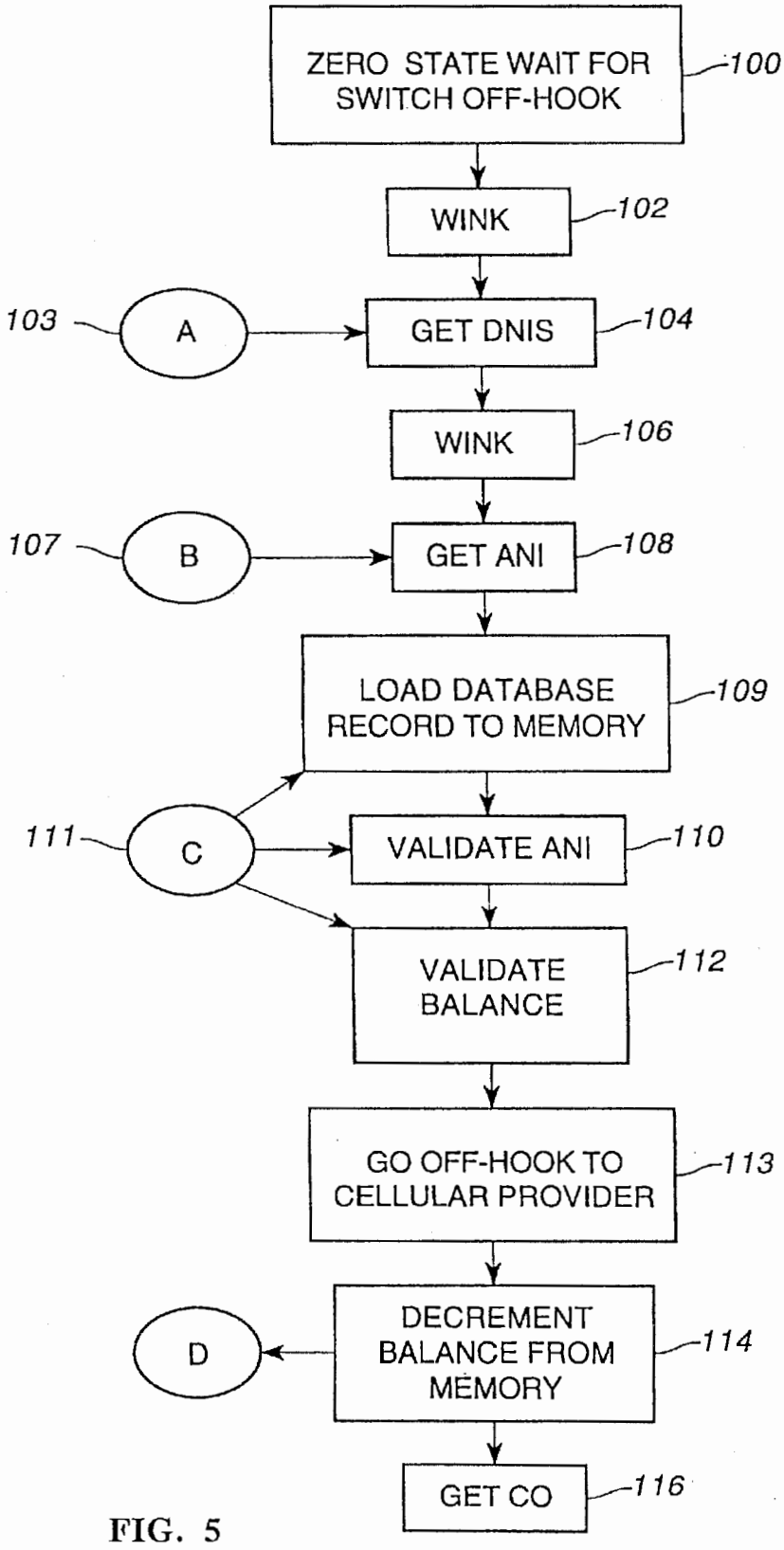
ZERO STATE WAIT FOR SWITCH OFF-HOOK
100
WINK
102
103
A
GET DNIS
104
WINK
106
107
B
GET ANI
108
LOAD DATABASE RECORD TO MEMORY
109
111
C
VALIDATE ANI
110
VALIDATE BALANCE
112
GO OFF-HOOK TO CELLULAR PROVIDER
113
D
DECREMENT BALANCE FROM MEMORY
114
GET CO
116

FIG. 5

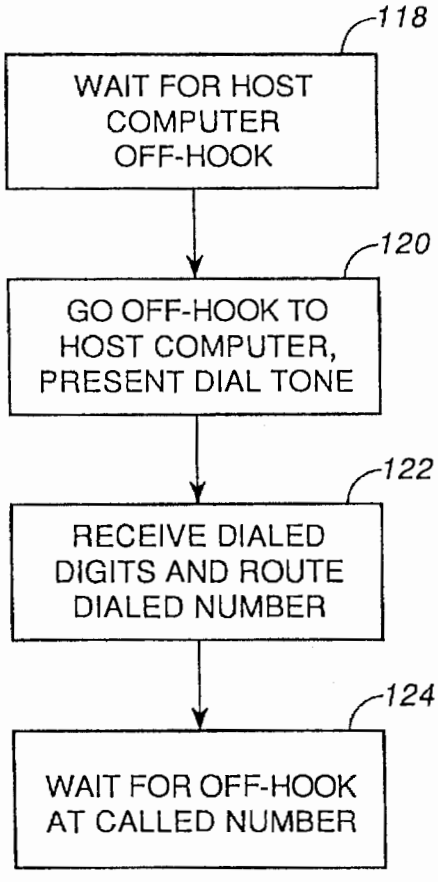
118
WAIT FOR HOST COMPUTER OFF-HOOK
120
GO OFF-HOOK TO HOST COMPUTER, PRESENT DIAL TONE
122
RECEIVE DIALED DIGITS AND ROUTE DIALED NUMBER
124
WAIT FOR OFF-HOOK AT CALLED NUMBER

FIG. 6

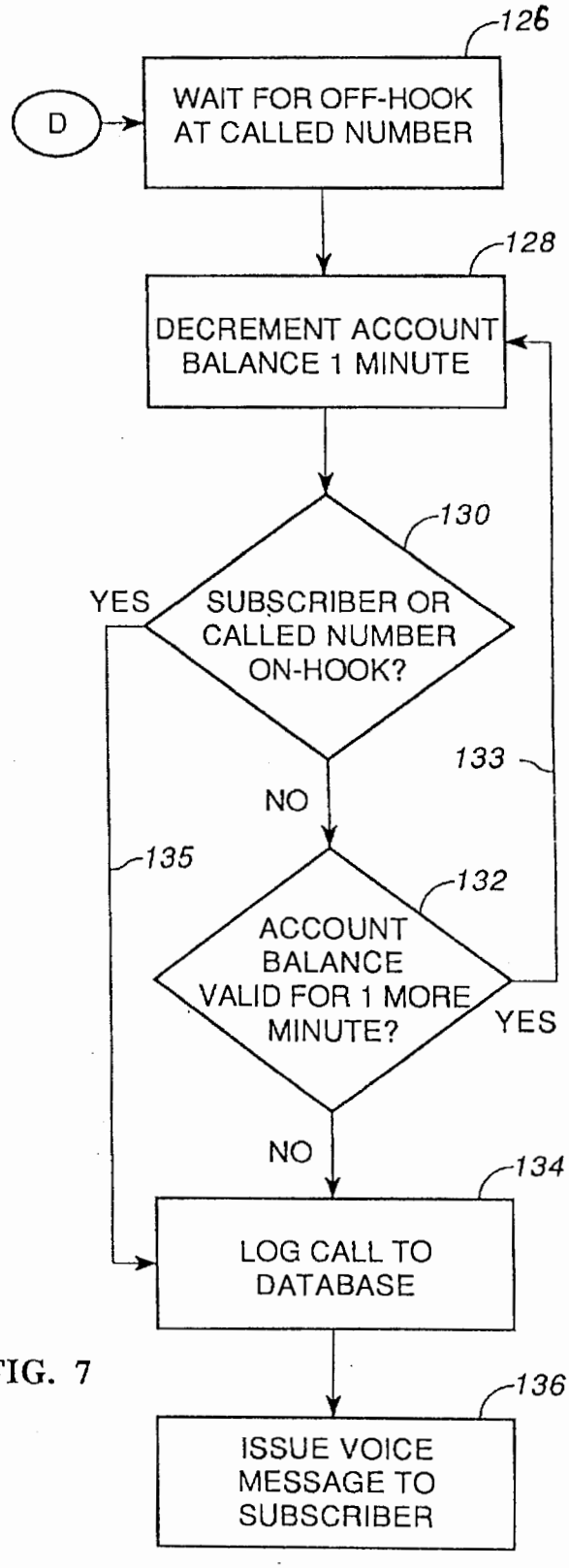
126
D
WAIT FOR OFF-HOOK AT CALLED NUMBER
128
DECREMENT ACCOUNT BALANCE 1 MINUTE
130
YES
SUBSCRIBER OR CALLED NUMBER ON-HOOK?
133
NO
135
132
ACCOUNT BALANCE VALID FOR 1 MORE MINUTE?
YES
NO
134
LOG CALL TO DATABASE
136
ISSUE VOICE MESSAGE TO SUBSCRIBER

FIG. 7

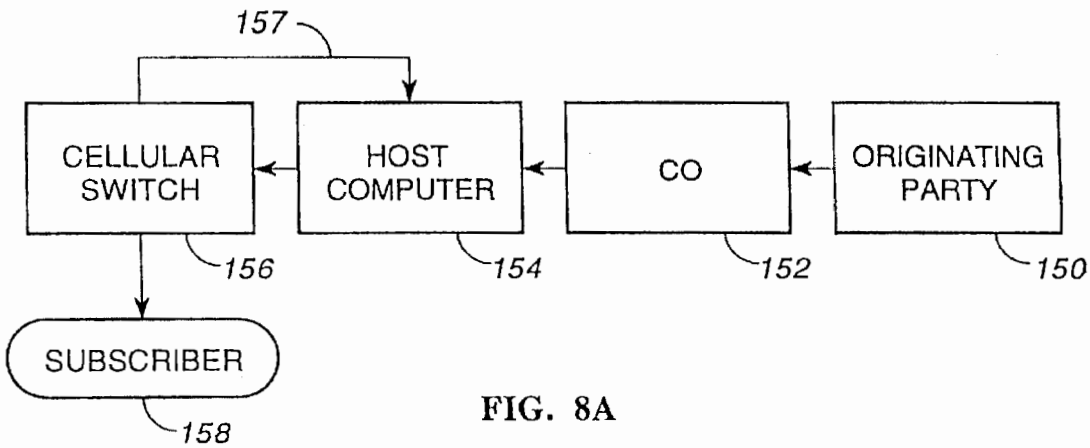
157
CELLULAR SWITCH
HOST COMPUTER
CO
ORIGINATING PARTY
156
154
152
150
SUBSCRIBER
158

FIG. 8A

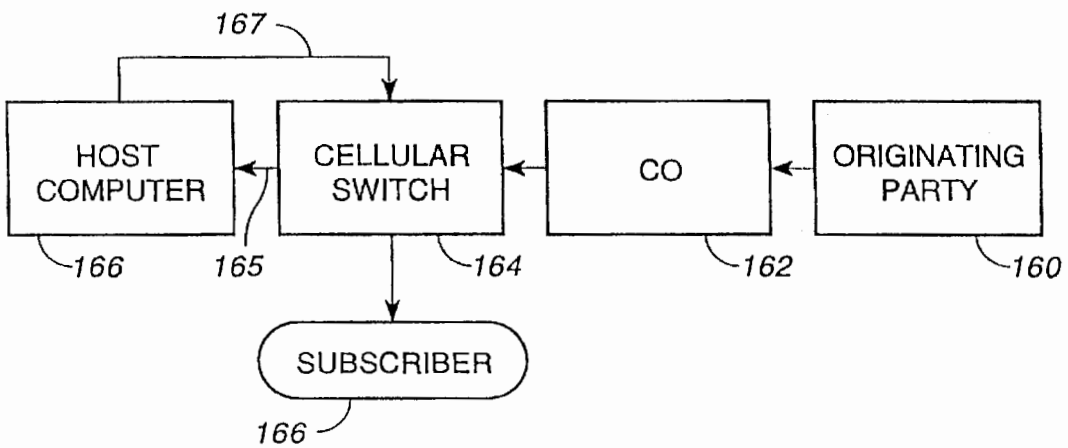
167
HOST COMPUTER
CELLULAR SWITCH
CO
ORIGINATING PARTY
166
165
164
162
160
SUBSCRIBER
166

FIG. 8B

SECURITY CELLULAR TELECOMMUNICATIONS SYSTEM

This is a continuation of application Ser. No. 08/364,479, filed Dec. 23, 1994, now US. Pat. No. 5,722,067 of DOUGLAS V. FOUGNIES and DAN B. HARNED, for a "SECURITY CELLULAR TELECOMMUNICATIONS SYSTEM".

BACKGROUND OF THE INVENTION

The present invention relates generally to a cellular telecommunications system having a security feature which allows only pre-authorized users to complete cellular telephone calls. More particularly, the cellular telecommunications system of the present invention permits cellular telecommunications providers to obtain pre-paid subscribers and eliminate credit-risk problems. In addition, the present invention provides anti-fraud protection for cellular service providers by allowing subscribers to designate protection codes which must be dialed before a telecommunications event will be completed.

Conventional cellular telecommunications systems require the cellular provider to undertake credit screening and certify credit-worthy subscribers before enabling a user to access the cellular telecommunications system. Customarily, a potential subscriber will apply to the cellular service provider, who then undertakes a verification process to determine whether the potential subscriber is credit-worthy. If the potential subscriber has a positive credit rating, the subscriber is given access to the cellular system and is able to initiate or receive unlimited cellular telecommunications events during a certain period of time or during a certain number of billing cycles. If the subscriber regularly pays invoices for the telecommunications services, the subscriber's access to the telecommunications system continues unfettered. If the subscriber fails to pay invoices as they become due, the cellular service provider has the ability to discontinue the subscriber's access until the invoice is paid. Thus, pre-paid telecommunications access is a desirable feature to prevent fraudulent use of the telecommunications system. Additionally, the present invention provides anti-fraud capabilities by requiring that a pass-code or personal identification number (PIN) be dialed along with the called number before a telecommunications event will be completed.

Up to now, the cellular service provider had no means available to offer cellular telecommunications services on a pre-paid basis, monitor the subscriber's cellular telecommunications usage in real time and discontinue access to the cellular telecommunications services immediately upon exhaustion of a pre-paid account balance. Additionally, up to now, cellular service providers had no means available to prevent cellular theft by unscrupulous persons retrieving equipment serial numbers from cellular signal transmissions and "cloning" or reprogramming other cellular equipment to replicate a subscriber's telecommunications profile.

DESCRIPTION OF THE PRIOR ART

Land-based telecommunication systems have devised a method for allowing pre-paid telephone usage and limiting telecommunications usage to only a period of time equivalent to the pre-paid value. Perhaps the best example of such a land-based telecommunications system is found in U.S. Pat. No. 5,353,335 issued Oct. 4, 1994 to D'Urso (hereinafter the "D'Urso" patent).

The D'Urso patent discloses a public switched telephone network (PTSN) which operates on a pre-payment system

and has multilingual capabilities. A telephone user purchases a pre-determined quantum of service, i.e., telecommunications time before access and is provided a card imprinted with a unique account number. The user is also given a series of toll free, commonly known as "1–800" numbers which allows the user to access the prepaid telephone system. Activation of each of the toll free numbers causes the system described in the D'Urso patent to interact wit the user in the user's native language or in a language which the user desires to interact with the telecommunications system. Upon dialing an appropriate toll free telephone number at a PTSN node, the user is connected through a switching system with a host computer. The host computer prompts the user, typically by digital voice commands, to enter the user's account number, using the PTSN node keypad, imprinted on the user's account card. The authenticity of the entered account number and the available amount of credit is determined by the host computer. Account authentication and credit balance checking is accomplished by local area network connection with a service management computer which manages a card database containing account information for each outstanding account card. If the account card is valid and an available balance is verified, the host computer prompts the user to enter a speed dialing alias or destination telephone number. The user is given a pre-set number of attempts to enter a valid alias or destination number. The system performs editing checks on the alias or destination number. Improper entry of a speed dialing alias or destination for the pre-set number of attempts will cause the host computer to disconnect the user. Upon proper entry of a speed dialing alias or destination number, the host computer compares the available card balance against the balance required to make a one minute phone call to the desired destination. If the available balance is greater than or equal to the balance required to make that one minute call, a voice response unit (VRU) plays an announcement in the user's chosen language informing the user that the call is being processed. The VRU computer uses a stored call rate associated with the caller's destination number and the available credit balance to determine the available call duration. A call duration timer is set in response to the determination of the available call duration.

The VRU computer is then directed to outpulse the digits of the destination number to a network node. When the host computer detects an off-hook condition from the destination, the call duration timer is started and the available call balance is depleted while the call is in progress. When the host computer detects that the available call balance is close to depletion, the VRU computer is bridged onto the call and plays a pending disconnect announcement in the users chosen language. Upon exhaustion of the call balance, the VRU plays a disconnect announcement, the call is disconnected and the host computer sends a message to the service management computer and database that the balance on the card is depleted.

Alternatively, if an on-hook condition at the destination occurs before the card balance is depleted, the host computer calculates the remaining available balance based upon the condition of the call timer and compares the computed balance to the minimum credit threshold. The host computer then causes a VRU computer to notify the caller, in the chosen language, whether the remaining balance exceeds the minimum credit threshold, and the value of the available balance and then disconnects the calling party. The host computer then sends an update message to the service management computer and the database, notifying them of the calculated remaining balance. The service management

computer then overwrites the present balance in the database with the calculated balance sent by the host computer.

While the D'Urso telecommunications system allows for pre-paid telecommunications activity, it is wholly dependent upon user first calling a toll free number, inputting account information, waiting for account validation, inputting the called destination, waiting for destination validation and then either being connected or not. The D'Urso system requires a plurality of input events by the user before a call can be passed to the destination. Moreover, the D'Urso system lacks direct interface with the remote database for real time account balance adjustment during a telecommunications event. Rather, in the D'Urso system a host computer queries a remote management server database to determine an available credit balance. The host computer then looks up a telecommunications rate for the destination number called, calculates a time value corresponding to the credit balance for the destination number and either authorizes or rejects the attempted call on the basis of the calculated time value. If the attempted call is authorized, a calculated time value timer is set. Upon occurrence of an off-hook condition at the destination called, the calculate time value timer at the host computer is decremented until a pre-determined threshold value. As the threshold value is reached, a voice message is bridged onto the call to advise the user of the remaining calculated time value. Upon expiration of the calculated time value, the call is disconnected. After disconnection due to either 1) expiration of the calculated time value, or 2) an on-hook condition at the called destination, the host computer re-calculates the credit balance from the remaining time value and sends an update record to the management server and database and overwrites the previous credit balance information stored at the database. In this manner, the database is not actively updated as the telecommunications activity is occurring.

Those skilled in the art will understand and appreciate that the prepaid land-based telecommunications system described in the D'Urso patent is fundamentally different from the cellular-based telecommunications system of the present invention.

SUMMARY OF THE INVENTION

A need has been recognized for a cellular telecommunications system which permits access by pre-paid users, without the need for modifying the cellular radiotelephones commonly in use. The present invention provides a system and method which recognizes cellular radiotelephones pre-programmed with a pre-selected telephone number and a automated number identification code (ANI). The pre-selected telephone number is reserved to the pre-paid cellular telecommunications system. The user merely enters the destination telephone number and activates an off-hook condition, typically by depressing a "send" button on the keypad of the cellular radiotelephone. The cellular radiotelephone then transmits the ANI and a dialed number identification system code (DNIS). Because all cellular systems operate on the basis of discrete cell sites, which re-transmit the received signal to a central cellular service organization cellular switch, both the ANI and the DNIS are transmitted to the cellular switch. At the cellular switch, the ANI is recognized as one reserved to the pre-paid cellular system and is re-directed, along with the DNIS, to the pre-paid cellular system switch via T1 land lines or via cellular re-transmission.

At the pre-paid cellular system switch, a host computer authenticates both the ANI and DNIS. Upon recognition of a valid ANI, the host computer establishes communications via either a local area network (LAN) or wide-area network (WAN) with a remote computer database server. At the remote computer database server, a database is maintained with pre-paid subscriber information. The pre-paid subscriber database contains records of each pre-paid subscriber. Each subscriber record in the database includes, at least the ANI assigned to that pre-paid subscriber, a pre-paid account balance and a time rate for telecommunications charges.

The host computer validates the received ANI by comparison to the ANI information in the database. Upon validation of the received ANI, account balance information for the account associated with the received ANI is queried to determine if there is a positive credit balance. Upon verification that the account has a positive credit balance, the host computer outpulses the dialed destination telephone number to a local exchange carrier, such as one of the Regional Bell Operating Companies.

During the call progress, the account balance information at the computer database server is decremented based upon elapse of pre-determined time periods at the predetermined time value for cellular telecommunications. It is important to note the time value is deducted from the account balance at regular intervals of time while the call is in progress.

The present invention allows a pre-paid user to access the cellular telecommunication system and have authentication and accounting occur transparently without any preliminary input by the user. The present invention accomplishes this by using the ANI as the file link to identify and authenticate the cellular telephone against the database. Thus, cellular telephone users are freed of the need to carry and use cards, are freed of the need to enter account information as a first step in the authentication process and the possibility of fraud on the cellular service providers is minimized.

These and other objects, features, and advantages of the present invention will become more apparent to those skilled in the art from the following more detailed description of the present invention when taken with reference to the accompanying drawings.

BRIEF DESCRIPTION OF THE DRAWINGS

FIG. **1** is a diagrammatic view of a typical cellular telecommunications system interfaced with the cellular telecommunications system of the present invention.

FIG. **2** is a diagrammatic call flow of the prior art pre-paid land-based telecommunications system.

FIG. **3** is a call flow diagram from a typical cellular radiotelephone.

FIG. **4** is a call flow diagram at a cellular switch in accordance with the present invention.

FIG. **5** is a flow diagram illustrating call validation processing at a host computer in accordance with the present invention.

FIG. **6** is a flow diagram illustrating call processing at the central office in accordance with the present invention.

FIG. **7** is a flow diagram illustrating call accounting processing at a host computer in accordance with the present invention.

FIG. **8**A is a flow diagram illustrating a first embodiment of incoming call processing in accordance with the present invention.

FIG. **8**B is a flow diagram illustrating a second embodiment of incoming call processing in accordance with the present invention.

DETAILED DESCRIPTION OF THE PREFERRED EMBODIMENTS

The prepaid cellular telecommunications system of the present invention is best illustrated with reference to the accompanying drawings in which FIGS. **1** and **3** through **8B** generally describe the system of the present invention and FIG. **2** depicts the prior art system described in the D'Urso patent.

With particular reference to FIG. **1**, the pre-paid cellular system **10** of the present invention is illustrated. The pre-paid cellular system **10** interfaces with a conventional cellular telecommunications switched network **2**. Conventional cellular telecommunications switched network **2** is a network consisting of a plurality of cellular antennae **4** capable of receiving cellular band RF signals **5**, with each of the plurality cellular antennae **4** being associated with a discrete cell site **6**. Each of the plurality of cellular antennae **4** is electrically linked to a cellular switch **8** which governs the operation of the cellular telecommunications switched network **2** and links the network **2** to a local exchange carrier **20** via T1 land line **12**.

In accordance with the present invention, a cellular service provider **14** is linked to he cellular telecommunications switched network **2** cellular switch **8** via T1 land line **15**. The cellular service provider **14** has a plurality of cellular telephone numbers reserved to it for pre-paid subscribers. Each reserved cellular telephone number has a unique automated number identifier (ANI) associated with the reserved telephone number. These reserved cellular telephone numbers are stored in a switch computer resident at switch **8**. The cellular service provider **14** is electrically linked to the local exchange carrier **20** via T1 land line **17** to communicate cellular telephone calls from the service provider **14** to the local exchange carrier's regular network.

The service provider **14** has host computer **16** which is preferably networked through either a local area network (LAN) or wide area network (WAN) **21** to a remote server computer **18**. In this manner a plurality of service providers may, within a single cellular service, operate from the same remote server computer **18**. The remote server computer **18** has an associated database **19** of pre-paid subscribers, which is independently accessible by each of the service providers.

The host computer is preferable based upon a multi-processor platform such as those made by Intel Corporation and based upon the 486 of PENTIUM microprocessor, with each host computer having a plurality of modem's and network interface circuit boards capable of simultaneous bi-directional processing of telecommunications data between the T1 land line **15** and the modems and between the host computer and the remote server. The remote server is also preferably a multi-processor based platform capable of distributed load processing, and fitted with a plurality of network interface circuit boards. The database is preferably stored across a plurality of hard disk drives configured as a redundant array of independent drives (RAID).

In the foregoing manner, a cellular transmission **5** received by an antenna **4** within a cell size **6** is received at switch **8**. If the ANI and DNIS transmitted with the cellular transmission **5** is one of the reserved pre-paid cellular telephone numbers, the switch **8** re-directs the transmission **5** to the service provider via the T1 land line **15**. The transmission **5** is communicated to the service provider's host computer **16**, which then authenticates the ANI and DNIS by accessing the server computer **18** and database **19**. Upon valid authentication of the ANI and DNIS, the subscriber identity is validated. The database **19** will have

records indicative of the subscriber's account balance. A check of the subscriber's account balance in the database **19** is made to validate the presence of a pre-paid balance sufficient to supply a pre-determined quantum of telecommunications, e.g., one minute, at a predetermined telecommunications charge rate associated with both the dialed number and the time of day in which the call is placed. Upon account balance validation, the host computer **16** validates the call and passes it to the local exchange carrier **20** via the T1 land line **7**.

A pre-payment telecommunications system **30** of the prior art is illustrated with reference to FIG. **2**. The system **30** requires that a pre-paid user first dial a toll free access number at block **32**. Upon connection with the toll free access number, the user must enter an assigned account number imprinted on a card at block **34**. After the card account number is validated at block **36**, a counter is set at block **44** and a check is made at block **46** to determine whether a call on the entered account is in progress. A negative validation at block **36** will cause an invalid card flag to be initiated at block **38** and an appropriate voice message from a voice response unit (VRU) announced at block **40**. If an affirmative response is elicited from the check at block **46**, the VRU prompts the user to enter a destination telephone number at block **48**. A validation check is made at block **50** of the dialed number entered in response to the VRU prompt at block **48**. If the validation check at block **50** is affirmative, a database associated with a management computer is called at block **54** and the account's records are retrieved for credit balance determination. A check is made of the credit associated with the card account to determine whether the user's account has any available credit at block **56** and whether the available credit exceeds a pre-determined minimum threshold at block **52**. An additional check is made to determine whether sufficient credit in the user's account balance to pay for a threshold time value of a call, e.g., one minute, based upon a time value rate for the destination being called is determined at block **58**. If the determinations made at blocks **52**, **56** and **58** are affirmative the call is passed by outpulsing the dialed number at block **60**. If a negative determination at any of blocks **52**, **56** or **58** is made, an appropriate voice message is played by the VRU at block **40** and the user is disconnected at block **42**.

Upon connection with the destination number, an off-hook condition of the destination is sensed at block **62**. If an off-hook condition exists at the destination, a timer is started at block **64** which continues until an on-hook condition exists at the destination and the timer is stopped at block **66**. Upon a stop timer condition at block **66**, the management computer is called and updated by overwriting the user's account record with updated information based upon the elapsed time of the call and the time value of the call at block **68**. The VRU then issues an appropriate voice message **40** to advise the user of the revised account balance and the user is disconnected at block **42**.

As will be understood by those skilled in the art, the foregoing description of he pre-paid telecommunications system of the prior art **30** requires the user to first access a toll-free number to be linked to a host computer, and then must enter an account code and wait for validation and then enter a destination number, and wait for validation before the call is passed. The present invention operates advantageously with a cellular telecommunications system to eliminate the need for a toll free host computer to interact directly with the user, and eliminate the need for the pre-paid user to make multiple keypad entries. Rather, as will be more apparent from the following description of the preferred

embodiment, the user only enters the destination number and all call processing is handled by the host computer in conjunction with the cellular switch.

Turning now to FIGS. **3–8B**, call flow in the pre-paid cellular telecommunications system of the present invention is illustrated. It is important to note that the cellular radiotelephones used by pre-paid subscribers are of a conventional type, without special circuitry, modification or programming. Rather, each cellular radiotelephone used by pre-paid subscribers is programmed, in the normal manner, with a pre-defined cellular telephone number reserved to the pre-paid cellular telecommunications system **10**.

FIG. **3** illustrates call initiation by a pre-paid cellular telecommunications subscriber. The subscriber initiates a cellular call at block **72** by entering the destination number directly at the keypad of the cellular radiotelephone. After the subscriber enters the called number, the subscriber sends the destination number (DNIS) by activating a send key on the keypad of he cellular radiotelephone at block **74**. The cellular radiotelephone then transmits the DNIS and an ANI unique to the transmitting cellular radiotelephone at block **76** as cellular signals **5** to the nearest antenna within the cell site.

FIG. **4** illustrates call processing by the cellular switch **8**. The cellular switch **8** is constantly in a wait condition for receipt of cellular transmissions from a plurality of subscribers within the coverage area of the cellular switch. The cellular switch receives the transmitted DNIS at block **78** and the transmitted ANI at block **79**. Upon recognition of the ANI as a unique ANI identifying a subscriber in the inventive pre-paid cellular system, the cellular switch routes the cellular call through a direct line to a host computer of the inventive cellular system at block **80** and goes off-hook to the host computer at block **82**. The cellular switch then waits for receipt of a wink signal at block **84**. Upon receipt of a first wink signal at block **84**, the cellular switch sends the DNIS to the host computer at block **86**. Upon receipt of a second wink signal at block **84**, the cellular switch sends the ANI to the host computer at block **88**. Those skilled in the art will under stand that the sequential order of sending the DNIS and ANI may be reversed. After sending the DNIS and ANI, the cellular switch waits for an off-hook condition from the host computer to connect the call. If the host computer fails to go off-hook within a pre-determined period of time, the cellular switch drops the caller.

Call processing at the host computer is illustrated in FIG. **5**. The host computer's initiated zero state is to wait for a cellular switch off-hook condition to the host computer. Upon receipt of an off-hook condition from the cellular switch, the host computer sends a first wink signal to the cellular switch at block **102** which tells the cellular switch to send the DNIS. The host computer then receives the DNIS **103** from the cellular switch at block **104**. After receiving the DNIS at block **104**, the host computer sends a second wink signal to the cellular switch at block **106** which tells the cellular switch to send the ANI. The host computer then receives the ANI **107** from the cellular switch at block **108**. The host computer accesses the subscriber database from the remote server **11** and loads the database record corresponding to the received ANI to memory at block **109**. The received ANI is validated against the database record in memory as one belonging to a pre-paid subscriber at block **110**. Upon ANI validation at block **110**, the host computer then validates the subscriber's pre-paid balance based upon the DNIS and time of day rate, e.g., peak or off-peak time rates, at block **112**.

Those skilled in the art will understand and appreciate that the processing of the DNIS and ANI signals may occur in reverse order, and that different cellular service providers may use alternative signals to represent the dialed number and the subscriber's cellular radiotelephone. For example, the cellular radiotelephone's electronic serial number (ESN) may be transmitted instead of the ANI. The ANI is referenced, herein only by way of example.

Upon balance validation at block **112**, the host computer goes off-hook to the cellular provider at block **113** and a pre-determined minimum time rate is decremented from the subscriber's balance in memory at block **114** and then the call accounting loop is initiated at block D. While at present time, it is preferable to use memory, those skilled in the art will understand that future improvements in LAN and WAN communication speeds and database rad-write speeds may obviate the desirability of loading the account balance to memory to facilitate subsequent call accounting processing. The host computer then outpulses the DNIS, or another host computer-modified signal including the called telephone number, such as a pass-code or PIN number, or the DNIS stripped of the area code, to the local exchange carrier for connection to obtain a central office (CO) line at block **116**.

Turning now to FIG. **6**, the CO is in a zero state waiting for an off-hook from the host computer at block **118**. Upon an off-hook condition from the host computer at block **118**, the CO goes off hook to the host computer and presents a dialtone, at block **120**. After the T1 land line has been seized, the DNIS or a host-computer modified DNIS, is received and routed over the T1 land line to the number dialed out by the host computer at block **122**. The CO then waits for an off-hook condition at the called telephone number at block **124** and connects the call.

Immediately upon occurrence of an off-hook condition at the called number, the call accounting flow illustrated in FIG. **7** is executed. While the CO negotiates and seizes a T1 line from the local exchange carrier, the host computer waits at block **126** for an off-hook condition at the called number. Immediately upon occurrence of an off-hook condition at the called number, the account balance in memory is decremented by a predetermined value, corresponding to a minimum time rate base upon the DNIS and the time of day rate, e.g., $0.02 for each six seconds of telecommunications time at an off-peak, i.e., after 7:00 p.m. local time. Thus, for example, immediately upon occurrence of an off-hook condition at the destination number, a minimum time value of one minute is decremented from the account balance resident in memory.

In accordance with the preferred embodiment of the present invention, the account balance read into memory is translated to a time value based upon the called number (DNIS) and the time of day rate applicable. In this manner, the account balance is converted to a time value e.g., number of seconds or number of minutes, and the time value is decremented based upon elapse of pre-determined time periods while either the subscriber's cellular telephone or the called number are off-hook.

After the elapse of a time period equal to the pre-determined minimum time value, the account balance is queried at block **132** to determine if there is a sufficient account balance for an additional quantum of the minimum time value. If a sufficient account balance is determined to exist at block **132**, the process loops back **133** and decrements the account balance by the pre-determined minimum time value at block **128**. Process loop **133** continues to execute until either the subscriber or the called number are on-hook at block **130** or until a negative response issues to the account balance validation at block **132**. If either an

on-hook condition at the subscriber or the called party at block **130** or the account balance is not validated at block **132**, a disconnection occurs, accounting ceases and the call, including the DNIS and the elapsed time of the call are logged to the database resident at the remote server (not shown) and the remaining account balance is written to the database at block **134**. The system then bridges to a voice response unit and issues a voice message to the subscriber advising the subscriber of the remaining account balance at block **136**. Where it is technically feasible to decrement the account balance directly from the database, without loading the account balance to memory at the host computer, those skilled in the art will understand that the step of writing the adjusted account balance to the database may not be a necessary step.

The foregoing describes the call handling process for outgoing calls from a cellular subscriber. In those cellular service areas where the cellular service is offered only on a "calling party pays" basis, there is no need to monitor or control telecommunications events incoming to the subscriber. However, in those cellular service areas where cellular service is offered on the basis that the subscriber pays telecommunication charges irrespective of whether the subscriber is originating or receiving a call, the present system provides a method for monitoring and controlling incomming cellular telephone calls to the pre-paid subscriber and adjusting the pre-paid subscriber's account balance for incomming calls.

FIGS. **8A** and **8B** illustrate alternative embodiments of the system adapted to monitor and control incomming calls to a pre-paid cellular service provider. It must be understood that the operation and construction of the cellular switch, host computer, CO and local exchange carrier are identical to that for outgoing calls made by the pre-paid subscriber. The principal difference is, however, in the sequence of events which occur to activate the call accounting and control functions of the inventive cellular telecommunications system.

We turn now specifically to FIG. **8A** which illustrates a first embodiment of the inventive pre-paid cellular telecommunications system. In FIG. **8A**, an originating party initiates a land line telephone call at block **150**. The initiated call consists of the pre-paid subscriber's telephone number unique to the pre-paid cellular system. The call is handed to a CO at block **152** and redirected to the host computer based upon the dialed number matching a pre-paid subscriber's telephone number. The host computer is initialized in a wait for CO off-hook state and waits for an incomming off-hook signal from the CO at block **154**. Upon receiving an incomming call at block **154**, the host computer validates the dialed number against the pre-paid subscriber database and determines whether a sufficient account balance exists for the pre-determined minimum time value for a telecommunications event, as described above with reference to FIG. **7**. Upon validation of the dialed number and the available account balance, the host computer outpulses the dialed number to the cellular switch **156** which routes the call to the cellular subscriber at block **158**. Upon occurrence of an off-hook condition at the cellular subscriber at block **158**, the cellular switch returns **157** the off-hook condition to the host computer and call accounting as described above with reference to FIG. **7** occurs.

In accordance with a second embodiment for incomming call handling in accordance with the present invention, and as illustrated in FIG. **8B**, the originating party at block **160** and the CO at block **162** function identically as described above with reference to FIG. **8A**. However, in this second embodiment, the CO outpulses the mobile identifier directly to the cellular switch at block **164**, and the cellular switch passes **165** the mobile identifier to the host computer at block **166** to enable the host computer to validate both the mobile identifier and the available balance. Upon such validation, the host computer at block **166** directs the cellular switch to pass the call to the subscriber at block **168**. Again, upon occurrence of an off-hook condition at the subscriber, the host computer executes call accounting as previously described with reference to FIG. **7**.

Thus, in the present invention, the disadvantages of the prior art are overcome, particularly as those disadvantages would affect a cellular user. By eliminating the need for the user to make unnecessary dialing entries and limit the user's dialing entry only to the destination number the present invention represents a valuable and needed advance in the art. Additionally, by using the ANI to identify the subscriber, rather than the situs of the call, the present invention provides for transparent call processing for the end-user and achieves a fraud tolerance level not presently available to service providers.

While the invention has been described with reference to its preferred embodiments, those skilled in the art will understand and appreciate from the foregoing that variations in equipment, operating conditions and configuration may be made and still fall within the spirit and scope of the present invention which is to be limited only by the claims appended hereto.

What is claimed is:

1. A method of completing pre-paid wireless telephone calls to a subscriber, the subscriber having a prepaid subscriber account balance stored in a database, where the prepaid subscriber account balance is associated with a predetermined wireless telephone number assigned to the subscriber, comprising:

receiving the subscriber's wireless telephone number at a wireless switch, the telephone number corresponding to a wireless telecommunications event initiated by a party calling the subscriber's wireless telephone number, the wireless switch recognizing the subscriber's wireless telephone number as being associated with the subscriber;

communicating between a computer with access to the database and the wireless switch;

validating existence of a pre-determined subscriber account balance in the database; and

if the validating step is successful, completing a call.

2. The method of claim **1** comprising:

checking for a connection with the subscriber's wireless telephone, and periodically validating a call based on the balance associated with the account during the telecommunications event until the call is terminated.

3. The method of claim **2** wherein the call is terminated due to validation being unsuccessful.

4. The method of claim **2** wherein the call is terminated by a party to the call.

5. The method of claim **1** comprising:

checking for a connection with the subscriber's wireless telephone; and

causing the call to be terminated when a time limit based on the account balance is expired.

6. A method of wireless telecommunications with respect to a subscriber, the subscriber having a prepaid subscriber account balance stored in a database, where the prepaid subscriber account balance is associated with a predetermined wireless telephone number assigned to the subscriber, comprising:

receiving an identifier associated with the subscriber at a wireless switch, the wireless switch recognizing the identifier as being associated with a pre-paid subscriber for whom a wireless telecommunications event has been initiated by a party calling the subscriber's wireless telephone number;

communicating between a computer with access to the database and the wireless switch;

attempting to establish a connection between the wireless switch and the subscriber's wireless telephone;

checking for a connection with the subscriber'wireless telephone, and periodically validating a call based on the balance associated with the account during the telecommunications event until the call is terminated.

7. The method of claim **6** wherein the call is terminated due to validation being unsuccessful.

8. The method of claim **6** wherein the call is terminated by a party to the call.

9. A method of completing wireless telephone call requests to a subscriber to a pre-paid wireless telephone service, comprising:

receiving at a wireless switch an identifier corresponding to a pre-paid wireless subscriber to whom a wireless telephone call is directed;

forwarding the identifier to a pre-paid wireless service provider associated with the pre-paid wireless subscriber that validates an account associated with the pre-paid wireless subscriber based on the forwarded identifier, and if the validation is successful, passes the identifier to a wireless switch and causes the call to be completed, performs periodic real-time validation of the account while the call is in progress, and causes the call to be interrupted while the call is in progress if the periodic validation fails.

10. A method of completing wireless telephone call requests to a subscriber to a pre-paid wireless telephone service, comprising:

receiving at a wireless switch an identifier corresponding to a pre-paid wireless subscriber to whom a wireless telephone call is directed;

at a pre-paid wireless service provider associated with a pre-paid wireless subscriber to whom a wireless telephone call is directed, receiving from a telecommunications service an identifier corresponding to the pre-paid wireless subscriber;

validating an account associated with the pre-paid wireless subscriber based on the forwarded identifier;

if the validation is successful, passing the identifier to a wireless switch and causing the call to be completed;

performing periodic real-time validation of the account while the call is in progress; and

causing the call to be interrupted while the call is in progress if the periodic validation fails.

11. A method of wireless telecommunications with respect to a subscriber, the subscriber having a prepaid subscriber account balance stored in a database where the prepaid subscriber account balance is associated with a predetermined wireless telephone number assigned to the subscriber, comprising:

receiving an identifier associated with the subscriber at a wireless switch, the wireless switch recognizing the identifier as being associated with a pre-paid subscriber for whom a wireless telecommunications event has been initiated by a party calling the subscriber's wireless telephone number;

communicating between a computer with access to the database and the wireless switch;

attempting to establish a connection between the wireless switch and the subscriber's wireless telephone;

checking for a connection with the subscriber's wireless telephone, and causing a call to be terminated when a time limit based on the account balance is expired.

12. The method of claim **11** comprising:

identifying at least one cost variable associated with the call;

determining a rate associated with a fixed interval of time based on the cost variable; and

converting the account balance to a maximum call length based on the account balance and based on the rate.

13. The method of claim **12** wherein the cost variable is time of day.

14. The method of claim **12** wherein the cost variable is a destination of the pre-paid wireless call.

15. A method of completing wireless telephone call requests to a subscriber to a pre-paid wireless telephone service, comprising:

receiving at a wireless switch an identifier corresponding to a pre-paid wireless subscriber to whom a wireless telephone call is directed;

forwarding the identifier to a pre-paid wireless service provider associated with the pre-paid wireless subscriber that validates an account associated with the pre-paid wireless subscriber based on the forwarded identifier, and if the validation is successful, passes the identifier to a wireless switch, causes the call to be completed, sets a time limit based on the account balance, and causes the call to be terminated when the time limit is expired.

16. A method of completing wireless telephone call requests to a subscriber to a pre-paid wireless telephone service, comprising:

receiving at a wireless switch an identifier corresponding to a pre-paid wireless subscriber to whom a wireless telephone call is directed;

at a pre-paid wireless service provider associated with a pre-paid wireless subscriber to whom a wireless telephone call is directed, receiving from a telecommunications service an identifier corresponding to the pre-paid wireless subscriber;

validating an account associated with the pre-paid wireless subscriber based on the forwarded identifier; and

if the validation is successful, passing the identifier to a wireless switch and causing the call to be completed; and

causing the call to be terminated when a time limit based on the account balance is expired.

17. A system for managing pre-paid wireless communications, comprising:

a wireless switch at which a wireless call request is received; and

a pre-paid wireless service provider, in communication with the wireless switch, that selectively authorizes the wireless call request based on information in the wireless call request that identifies a pre-paid wireless subscriber to whom the call request is directed;

wherein the pre-paid wireless service provider selectively authorizes the wireless call request by validating in real time an account associated with the identified pre-paid wireless subscriber; and

wherein validation of an account by the pre-paid wireless service provider occurs periodically during a call and the call is caused to be terminated if validation is unsuccessful.

18. A method for managing pre-paid wireless communications, comprising:

receiving a wireless call request at a wireless switch; and

communicating between the wireless switch and a pre-paid wireless service provider that selectively authorizes the wireless call request based on information in the wireless call request that identifies a pre-paid wireless subscriber to whom the call request is directed; wherein the pre-paid wireless service provider selectively authorizes the wireless call request by validating in real time an account associated with the identified pre-paid wireless subscriber; and wherein validation of an account by the pre-paid wireless service provider occurs periodically during a call and the call is caused to be terminated if validation is unsuccessful.

19. A method for managing pre-paid wireless communications, comprising:

at a pre-paid wireless service provider, communicating with a wireless switch at which a wireless call request is received, and selectively authorizing the wireless call request based on information in the wireless call request that identifies a pre-paid wireless subscriber to whom the call request is directed;

wherein the pre-paid wireless service provider selectively authorizes the wireless call request by validating in real time an account associated with the identified pre-paid wireless subscriber; and

wherein validation of an account by the pre-paid wireless service provider occurs periodically during a call and the call is caused to be terminated if validation is unsuccessful.

20. A system for managing pre-paid wireless communications, comprising:

a wireless switch at which a wireless call request is received; and

a pre-paid wireless service provider, in communication with the wireless switch, that selectively authorizes the wireless call request based on information in the wireless call request that identifies a pre-paid wireless subscriber to whom to call request is directed;

wherein the pre-paid wireless service provider selectively authorizes the wireless call request by validating in real time an account associated with the identified pre-paid wireless subscriber; and

wherein validation of an account by the pre-paid wireless service provider includes causing a call is caused to be terminated when a time limit based on a balance in the account is expired.

21. A method for managing pre-paid wireless communications, comprising:

receiving a wireless call request at a wireless switch; and

communicating between the wireless switch and a pre-paid wireless service provider that selectively authorizes the wireless call request based on information in the wireless call request that identifies a pre-paid wireless subscriber to whom the call request is directed; wherein the pre-paid wireless service provider selectively authorizes the wireless call request by validating in real time an account associated with the identified pre-paid wireless subscriber; and wherein validation of an account by the pre-paid wireless service provider includes causing a call to be terminated when a time limit based on a balance in the account is expired.

22. A method for managing pre-paid wireless communications, comprising:

at a pre-paid wireless service provider, communicating with a wireless switch at which a wireless call request is received, and selectively authorizing the wireless call request based on information in the wireless call request that identifies a pre-paid wireless subscriber to whom the call request is directed;

wherein the pre-paid wireless service provider selectively authorizes the wireless call request by validating in real time an account associated with the identified pre-paid wireless subscriber; and

wherein validation of an account by the pre-paid wireless service provider includes causing a call to be terminated when a time limit based on a balance in the account is expired.

23. A system for managing pre-paid wireless communications, comprising:

a wireless switch at which a wireless call request is received; and

a pre-paid wireless service provider, in communication with the wireless switch, that selectively authorizes the wireless call request based on information in the wireless call request that identifies a pre-paid wireless subscriber to whom the wireless call request is directed;

wherein the pre-paid wireless service provider selectively authorizes the wireless call request by validating in real time an account balance associated with the identified pre-paid wireless subscriber; and

wherein validation of the account balance by the pre-paid wireless service provider occurs prior to a call being authorized.

24. A method for managing pre-paid wireless communications, comprising:

receiving a wireless call request at a wireless switch; and

communicating between the wireless switch and a pre-paid wireless service provider that selectively authorizes the wireless call request based on information in the wireless call request that identifies a pre-paid wireless subscriber to whom the call request is directed; wherein the pre-paid wireless service provider selectively authorizes the wireless call request by validating in real time an account balance associated with the identified pre-paid wireless subscriber; and wherein validation of the account balance by the pre-paid wireless service provider occurs prior to a call being authorized.

25. A method for managing pre-paid wireless communications, comprising:

at pre-paid wireless service provider, communicating with a wireless switch at which a wireless call request is received, and selectively authorizing the wireless call request based on information in the wireless call request that identifies a pre-paid wireless subscriber to whom the call request is directed;

wherein the pre-paid wireless service provider selectively authorizes the wireless call request by validating in real time an account balance associated with the identified pre-paid wireless subscriber; and

wherein validation of the account balance by the pre-paid wireless service provider occurs prior to a call being authorized.

26. A system for managing pre-paid wireless communications comprising:

a wireless switch at which is received a wireless call request;

a pre-paid wireless service provider, in communication with the wireless switch, that selectively authorizes the wireless call request based on information in the wireless call request that identifies a pre-paid wireless subscriber to whom the wireless call request is directed; and

a database of pre-paid wireless subscribers, comprising account information for the pre-paid wireless subscribers, that is accessed by the pre-paid wireless service provider to decide whether to authorize the wireless call request;

the pre-paid wireless service provider's selective authorization of the wireless call request being based on a real-time validation of an account balance associated with the identified pre-paid wireless subscriber.

27. A method for managing pre-paid wireless communications, comprising:

receiving a wireless call request at a wireless switch; and

communicating between the wireless switch and a pre-paid wireless service provider that selectively authorizes the wireless call request based on information in the wireless call request that identifies a pre-paid wireless subscriber to whom the call request is directed, and that accesses a database of pre-paid wireless subscribers, comprising account information for the pre-paid wireless subscribers, in order to decide whether to authorize the wireless call request, the pre-paid wireless service provider's selective authorization of the wireless call request being based on a real-time validation of an account balance associated with the identified pre-paid wireless subscriber.

28. A method for managing pre-paid wireless communications, comprising:

at a pre-paid wireless service provider, communicating with a wireless switch at which a wireless call request is received, and selectively authorizing the wireless call request based on information in the wireless call request that identifies a subscriber to whom the call request is directed; and

accessing a database of pre-paid wireless subscribers, comprising account information for the pre-paid wireless subscribers, in order to decide whether to authorize the wireless call request, the pre-paid wireless service provider's selective authorization of the wireless call request being based on a real-time validation of the of an account balance associated with the identified pre-paid wireless subscriber.

29. A method for pre-paid wireless telephone service, the method comprising:

identifying an originator of a wireless telephone call as a subscriber to a pre-paid wireless telephone service;

causing the call to be connected to a pre-paid switching system; and

a wireless switch sending an identifier associated with the destination of the call and an identifier associated with a pre-paid account of the originator of the call to the pre-paid switching system that validates the balance in the account of the originator of the call, causes the call to be connected to the destination, sets a time limit based on the account balance, and causes the call to be terminated when the time limit is expired.

30. A method for pre-paid wireless telephone service, the method comprising:

at a pre-paid switching system, receiving from a wireless switch an identifier associated with a destination of a wireless telephone call, and an identifier associated with a pre-paid account of an originator of the call, the originator of the call being identified as being a subscriber to the pre-paid wireless telephone service;

validating the balance in the account of the originator of the call;

causing the call to be connected to the destination; and

periodically validating the call based on the balance associated with the account and causing the call to be terminated if validation is unsuccessful.

31. A method for pre-paid wireless telephone service, the method comprising:

at a pre-paid switching system, receiving from a wireless switch an identifier associated with a destination of a wireless telephone call, and an identifier associated with a pre-paid account of an originator of the call, the originator of the call being identified as being a subscriber to the pre-paid wireless telephone service;

validating the balance in the account of the originator of the call;

causing the call to be connected to the destination; and

causing the call to be terminated when a time limit based on the balance in the account is expired.

32. A method for pre-paid wireless telephone service, the method comprising:

identifying an originator of a wireless telephone call as a subscriber to a pre-paid wireless telephone service;

causing the call to be connected to a pre-paid switching system; and

sending an identifier associated with the destination of the call and an identifier associated with a pre-paid account of the originator of the call to the pre-paid switching system that validates the balance in the account of the originator of the call, causes the call to be connected to the destination, and periodically validates the call based on the balance associated with the account and terminates the call if validation is unsuccessful;

wherein the identifier associated with the pre-paid account is an electronic serial number.

33. A system for providing pre-paid wireless telephone service, comprising:

(a) a database of information pertaining to subscribers to the pre-paid wireless telephone service;

(b) a computer with access to the database of information pertaining to subscribers to the pre-paid wireless telephone service, which computer receives, from a wireless switch, an identifier associated with a destination of a wireless telephone call, and an identifier associated with a pre-paid account of an originator of the call, the originator of the call being identified as being a subscriber to the pre-paid wireless telephone service;

(c) a computer that receives information from the wireless switch and that:

(i) validates a balance in the pre-paid account of the originator of the call;

(ii) causes the call to be connected to the destination;

(iii) periodically validates the call based on the balance associated with the account; and

(iv) causes the call to be terminated if validation is unsuccessful.

34. A system for providing pre-paid wireless telephone service, comprising:

(a) a database of information pertaining to subscribers to the pre-paid wireless telephone service;

(b) a computer with access to the database of information pertaining to subscribers to the pre-paid wireless telephone service, which computer receives, from a wireless switch, an identifier associated with a destination of a wireless telephone call, and an identifier associated with a pre-paid account of an originator of the call, the originator of the call being identified as being a subscriber to the pre-paid wireless telephone service;

(c) a computer that receives information from the wireless switch and that:

(i) validates a balance in the pre-paid account of the originator of the call;

(ii) causes the call to be connected to the destination;

(iii) sets a time limit based on the account balance; and

(iv) causes the call to be terminated when the time limit is expired.

35. A method for pre-paid wireless telephone service comprising:

receiving an identifier associated with a pre-paid account of an originator of a call at a wireless switch;

at the wireless switch, determining whether the identifier is associated with a pre-paid account; and

if the identifier is associated with a pre-paid account, communicating with a pre-paid service provider and causing the identifier associated with the pre-paid account and an identifier associated with a destination of the call to be sent to the pre-paid service provider.

36. A method as set forth in claim **35** and including:

at the pre-paid service provider, validating the call based on the balance associated with the account;

causing the call to be completed; and

periodically validating the call based on the balance associated with the account and causing the call to be terminated if validation is unsuccessful.

37. The method as set forth in claim **36** wherein the step of periodically validating the call continues until the call is terminated or the balance in the account reaches a predetermined amount.

38. The method as set forth in claim **36** including terminating the call when the balance in the account reaches a predetermined amount.

39. The method of claim **35** comprising:

at the pre-paid service provider, validating the call based on the balance associated with the account;

causing the call to be completed; and

causing the call to be terminated when a time limit based on the account balance is expired.

40. The method as set forth in claim **35** wherein the step of determining whether the identifier is associated with a pre-paid account comprises accessing a database remote from the pre-paid service provider and comparing the identifier with numbers stored in the database.

41. The method as set forth in claim **40** wherein the accessing step includes sharing access to the database with other pre-paid service providers.

42. A method for pre-paid wireless telephone service, the method comprising:

identifying an originator of a wireless telephone call as a subscriber to a pre-paid wireless telephone service;

causing the call to be connected to a pre-paid switching system; and

a wireless switch sending an identifier associated with the destination of the call and an identifier associated with a pre-paid account of the originator of the call to the pre-paid switching system that validates the balance in the account of the originator of the call, causes the call to be connected to the destination, and periodically validates the call based on the balance associated with the account and causes the call to be terminated if validation is unsuccessful.

43. The method as set forth in claim **42** including terminating the call when the balance in the account becomes zero.

44. The method of claim **42** wherein the identifier associated with the pre-paid account is a mobile identifier.

45. The method of claim **42** wherein the identifier associated with the pre-paid account is a telephone number.

46. The method of claim **42** wherein the identifier associated with the pre-paid account is an automated number identifier.

47. The method as set forth in claim **42, 29, 30,** or **31** wherein the validating step includes finding the pre-paid account of the originator of the call and retrieving a balance associated with the account.

48. The method as set forth in claim **47** including maintaining a database of identifiers associated with pre-paid wireless telephone accounts, the database being remote from the pre-paid switching system, and the finding step including accessing the database via a remote server.

49. The method as set forth in claim **48** wherein the accessing step includes sharing access to the database with one or more other pre-paid switching systems.

50. The method as set forth in claim **42, 29, 30,** or **31** including notifying the originator of the pre-paid wireless telephone call of the status of the account.

51. The method of claim **50** including notifying the originator of the pre-paid wireless telephone call of the remaining balance.

52. The method of claim **42, 29, 30,** or **31** wherein the identifier associated with the pre-paid account is an electronic serial number.

53. The method of claim **42, 29, 30,** or **31** comprising:

identifying at least one cost variable associated with the call;

determining a rate associated with a fixed interval of time based on the cost variable; and

converting the account balance to a maximum call length based on the account balance and based on the rate.

54. The method of claim **53** wherein the cost variable is time of day.

55. The method of claim **53** wherein the cost variable is a destination of the pre-paid wireless call.

56. The method as set forth in claim **42, 29, 30,** or **31** wherein the originator of the wireless telephone call is identified as a subscriber to the pre-paid wireless telephone service at the wireless switch.

57. The method as set forth in claim **42, 29, 30,** or **31** wherein the identifier associated with the destination of the call is entered by the subscriber prior to origination of the wireless telephone call, and the identifier associated with the pre-paid account of the originator of the call is transparently sent to the wireless switch upon origination of the wireless telephone call.

58. The system of claim **33** to **34** wherein the computer with access to the database is the computer that receives information from the wireless switch, validates the balance, causes the call to be connected to the destination, periodically validates the call, and causes the call to be terminated if validation is unsuccessful.

59. The system of claim **33** to **34** wherein the computer with access to the database is networked to a server computer with which the database is associated.

* * * * *

LIBA/1333699.1

JS 44 (Rev. 3/99)

CIVIL COVER SHEET

The JS-44 civil cover sheet and the information contained herein neither replace nor supplement the filing and service of pleading or other papers as required by law, except as provided by local rules of court. This form, approved by the Judical Conference of the United States in September 1974, is required for the use of the Clerk of Court for the purpose of initiating the civil docket sheet. (SEE INSTRUCTIONS ON THE REVERSE OF THE FORM.)

I. (a) PLAINTIFFS

FREEDOM WIRELESS, INC.

(b) County of Residence of First Listed Plaintiff _____
(EXCEPT IN U.S. PLAINTIFF CASES)

(c) Attorney's (Firm Name, Address, and Telephone Number)
Paul F. Ware, Jr., P.C. (BBO # 516240)
John Kenneth Felter, P.C. (BBO #162540)
Douglas C. Doskocil (BBO #558949)
Goodwin Procter LLP, Exchange Place, Boston, MA 02109
Tel (617) 570-1000

DEFENDANTS

BOSTON COMMUNICATIONS GROUP, INC., ALLTEL CORPORATION, and DOES 1-20

County of Residence of First Listed Defendant _____
(IN U.S. PLAINTIFF CASES ONLY)
NOTE: IN LAND CONDEMNATION CASEES, USE THE LOCATION OF THE LAND INVOLVED.

Attorneys (If Known)

05 11062 EFH

II. BASIS OF JURISDICTION (Place and "X" in One Box Only)

- ☐ 1 U.S. Government Plaintiff
- ☒ 3 Federal Question (U.S. Government Not a Party)
- ☐ 2 U.S. Government Defendant
- ☐ 4 Diversity (Indicate Citizenship of Parties in Item III)

III. CITIZENSHIP OF PRINCIPAL PARTIES (Place an "X" in One Box for Plaintiff and One Box for Defendant)
(For Diversity Cases Only)

	PTF	DEF		PTF	DEF
Citizen of This State	☐ 1	☐ 1	Incorporated *or* Principal Place of Business In This State	☐ 4	☐ 4
Citizen of Another State	☐ 2	☐ 2	Incorporated *and* Principal Place of Business In Another State	☐ 5	☐ 5
Citizen or Subject of a Foreign Country	☐ 3	☐ 3	Foreign Nation	☐ 6	☐ 6

IV. NATURE OF SUIT (Place and "X" in One Box Only)

CONTRACT
- ☐ 110 Insurance
- ☐ 120 Marine
- ☐ 130 Miller Act
- ☐ 140 Negotiable Instrument
- ☐ 150 Recovery of Over-payment & Enforce-ment of Judgment
- ☐ 151 Medicare Act
- ☐ 152 Recovery of Defaulted Student Loans (Excl. Veterans)
- ☐ 153 Recovery of Overpay-ment of Veteran's Benefits
- ☐ 160 Stockholders' Suits
- ☐ 190 Other Contract
- ☐ 195 Contract Product Lia-bility
- ☐ 196 Franchise

TORTS

PERSONAL INJURY
- ☐ 310 Airplane
- ☐ 315 Airplane Product Liability
- ☐ 320 Assault, Libel & Slander
- ☐ 330 Federal Employers' Liability
- ☐ 340 Marine
- ☐ 345 Marine Product Liability
- ☐ 350 Motor Vehicle
- ☐ 355 Motor Vehicle Product Liability
- ☐ 360 Other Personal Injury

PERSONAL INJURY
- ☐ 362 Personal Injury—Med. Malpractice
- ☐ 365 Personal Injury—Product Liability
- ☐ 368 Asbestos Personal Inury Product Liability

PERSONAL PROPERTY
- ☐ 370 Other Fraud
- ☐ 371 Truth in Lending
- ☐ 380 Other Personal Property Damage
- ☐ 385 Property Damage Product Liability

FORFEITURE/PENALTY
- ☐ 610 Agriculture
- ☐ 620 Other Food & Drug
- ☐ 625 Drug Related Seizure of Property 21 USC
- ☐ 630 Liquor Laws
- ☐ 640 R.R. & Truck
- ☐ 650 Airline Regs.
- ☐ 660 Occupational Safety/Health
- ☐ 690 Other

BANKRUPTCY
- ☐ 422 Appeal 28 USC 158
- ☐ 423 Withdrawal 28 USC 157

PROPERTY RIGHTS
- ☐ 820 Copyrights
- ☒ 830 Patent
- ☐ 840 Trademark

OTHER STATUTES
- ☐ 400 State Reapportionment
- ☐ 410 Antitrust
- ☐ 430 Banks and Banking
- ☐ 450 Commerce/ICC Rates/etc.
- ☐ 460 Deportation
- ☐ 470 Racketeer Influenced and Corrupt Organization
- ☐ 480 Consumer Credit
- ☐ 490 Cable/Sat TV
- ☐ 810 Selective Service
- ☐ 850 Securities/Commod-ities/Exchange
- ☐ 875 Customer Challenge 12 USC 3410
- ☐ 890 Other Statutory Actions
- ☐ 891 Agricultural Acts
- ☐ 892 Economic Stabilization Act
- ☐ 893 Environmental Matters
- ☐ 894 Energy Allocation Act
- ☐ 895 Freedom of Information Act
- ☐ 900 Appeal of Fee Deter-mination Under Equal Access to Justice
- ☐ 950 Constitutionality of State Statutes

LABOR
- ☐ 710 Fair Labor Standards Act
- ☐ 720 Labor/M gmt. Relations
- ☐ 730 Labor/Mgment. Reporting & Disclosure Act
- ☐ 740 Railway Labor Act
- ☐ 790 Other Labor Litigation
- ☐ 791 Empl. Ret. Inc. Security Act

SOCIAL SECURITY
- ☐ 861 HIA (13 95 ff)
- ☐ 862 Black Lung (923)
- ☐ 863 DIW C/DIW W (405 (g))
- ☐ 864 SSID Title XVI
- ☐ 865 RSI (405(g))

FEDERAL TAXSUITS
- ☐ 870 Taxes (U.S. Plaintiff or Defendant)
- ☐ 871 IRS—Third Party 26 USC 7609

REAL PROPERTY
- ☐ 210 Land Condemnation
- ☐ 220 Foreclosure
- ☐ 230 Rent Lease & Ejectment
- ☐ 240 Torts to Land
- ☐ 245 Tort Product Liability
- ☐ 290 All Other Real Property

CIVIL RIGHTS
- ☐ 441 Voting
- ☐ 442 Employment
- ☐ 443 Housing/Accom-modations
- ☐ 444 Welfare
- ☐ 445 Amer. w/Disabilities – Employment
- ☐ 446 Aer. w/Disabilities - Other
- ☐ 440 Other Civil Rights

PRISONER PETITIONS
- ☐ 510 Motions to Vacate Sentences

Habeas Corpus:
- ☐ 530 General
- ☐ 535 Death Penalty
- ☐ 540 Mandamus & Other
- ☐ 550 Civil Rights
- ☐ 535 Prison Condition

V. ORIGIN (PLACE AN "X" IN ONE BOX ONLY)

☒ 1 Original Proceeding | ☐ 2 Removed from State Court | ☐ 3 Remanded from Appellate Court | ☐ 4 Reinstated or Reopened | ☐ 5 Transferred from another district (specify) | ☐ 6 Multidistrict Litigation | ☐ 7 Appeal to District Judge from Magistrate Judgment

VI. CAUSE OF ACTION

Cite the U.S. Civil Statute under which you are filing (**Do not cite jurisdictional statutes unless diversity**):
35 U.S.C. § 1 et seq. and 35 U.S.C. § 271

Brief description of cause:
Patent infringement.

VII. REQUESTED IN COMPLAINT

☐ CHECK IF THIS IS A **CLASS ACTION** UNDER F.R.C.P. 23

DEMAND$

CHECK YES only if demanded in complaint
JURY DEMAND: ☒ Yes ☐ No

VIII. RELATED CASE(S) IF ANY (See instructions):

JUDGE **E.F. Harrington** DOCKET NUMBER **Civ. No. 00-12234 EFH**

DATE 5/20/05

SIGNATURE OF ATTORNEY OF RECORD

FOR OFFICE USE ONLY

RECEIPT # _____ AMOUNT _____ APPLYING IFP _____ JUDGE _____ MAG. JUDGE _____

UNITED STATES DISTRICT COURT
DISTRICT OF MASSACHUSETTS

1. Title of case (name of first party on each side only) **FREEDOM WIRELESS, INC. V. BOSTON COMMUNICATIONS GROUP, INC., et al.**

2. Category in which the case belongs based upon the numbered nature of suit code listed on the civil cover sheet. (See local rule 40.1(a)(2)).

☐ I. 160, 410, 470, R.23, REGARDLESS OF NATURE OF SUIT.

☒ II. 195, 196, 368, 400, 440, 441-446, 540, 550, 555, 625, 710, 720, 730, 740, 790, 791, 820*, 830*, 840*, 850, 890, 892-894, 895, 950. *Also complete AO 120 or AO 121 for patent, trademark or copyright cases

☐ III. 110, 120, 130, 140, 151, 190, 210, 230, 240, 245, 290, 310, 315, 320, 330, 340, 345, 350, 355, 360, 362, 365, 370, 371, 380, 385, 450, 891.

☐ IV. 220, 422, 423, 430, 460, 480, 490, 610, 620, 630, 640, 650, 660, 690, 810, 861-865, 870, 871, 875, 900.

05 11062 EFH

☐ V. 150, 152, 153.

3. Title and number, if any, of related cases. (See local rule 40.1(g)). If more than one prior related case has been filed in this district please indicate the title and number of the first filed case in this court

E.F. Harrington, Freedom Wireless, Inc. v. Boston Communications, et al., Civ. No. 00-12234 EFH

4. Has a prior action between the same parties and based on the same claim ever been filed in this court?

YES ☒ NO ☐

5. Does the complaint in this case question the constitutionality of an act of congress affecting the public interest? (See 28 USC § 2403)

YES ☐ NO ☒

If so, is the U.S.A. or an officer, agent or employee of the U.S. a party?

YES ☐ NO ☐

6. Is this case required to be heard and determined by a district court of three judges pursuant to title 28 USC §2284?

YES ☐ NO ☒

7. Do all of the parties in this action, excluding governmental agencies of the united states and the Commonwealth of Massachusetts ("governmental agencies"), residing in Massachusetts reside in the same division? – (See Local Rule 40.1(d)).

YES ☒ NO ☐

A. If yes, in which division do all of the non-governmental parties reside?

Eastern Division ☒ Central Division ☐ Western Division ☐

B. If no, in which division do the majority of the plaintiffs or the only parties, excluding governmental agencies, residing in Massachusetts reside?

Eastern Division ☐ Central Division ☐ Western Division ☐

8. If filing a Notice of Removal – are there any motions pending in the state court requiring the attention of this Court? (If yes, submit a separate sheet identifying the motions)

YES ☐ NO ☐

(PLEASE TYPE OR PRINT)

ATTORNEY'S NAME **Douglas C. Doskocil (BBO # 558949)**

ADDRESS **Goodwin Procter LLP, Exchange Place, Boston, Massachusetts 02109**

TELEPHONE NO. **(617) 570-1000**