EXHIBIT A

The '623 Patent	The Army Contract
FIELD OF THE INVENTION The present invention relates to the inspection of large containers by means of x-ray radiation, and more particularly to the x-ray inspection of cargo containers by means of transmitted and back scattered radiation. (Col. 1, lines 12-15)	**SUMMARY** This proposal is submitted in response to solicitation BAAB10-91-Q-2036 issued by the U.S. Army CECOM, and in particular to address the CounterNarcotics (CN) Technologies area of interest. AS&E Proposes to design, develop, produce, test, and deliver a prototype mobile x-ray inspection system intended for the non-intrusive examination of over-the-road vehicles and large cargo containers for the detection of narcotics and other contraband. * * * The proposed non-intrusive x-ray inspection system is based on AS&E's proprietary MICRO-DOSE Flying-Spot Technology. This scanning method makes possible not only the acquisition of conventional digital x-ray transmission images at extremely low doses, but also the acquisition of digital *baskcattered* x-ray images. (Ex. 1 at 54)[1]
BACKGROUND ART The interdiction of illicit drugs, explosives, and other contraband is an important goal of law enforcement. To that end, a variety of technologies have been developed and deployed for the non-intrusive inspection of containers not readily susceptible to visual scrutiny from the outside. The	1.1 **Background Discussion** 1.1.1 <u>Non-destructive X-ray Inspection Technologies</u> The interdiction of illicit drugs and other contraband has long been an important goal of the U.S. Customs Service (USCS) and of other law enforcement agencies. To that

[1] Exhibit 1 ("Ex. 1") referred to in this chart was attached to the Surreply Declaration of Robert M. Abrahamsen in Support of L-3's Opposition to AS&E's Motion for Partial Summary Judgment (D.I. 60).

The '623 Patent	The Army Contract
non-intrusive aspect of these inspection techniques is important; the great majority of containers do not carry contraband, and the public would not long tolerate the delays, disruption (and in some cases damage) of property, and invasions of privacy that would occur if invasive inspection means were commonly used. Non-intrusive inspection is typically non-destructive and can usually be accomplished faster than intrusive inspection, thereby increasing productivity of inspectors. Increased productivity means more containers inspected and more contraband interdicted. (Col. 1, lines 17-32)	end, an arsenal of technologies and equipment has been developed and deployed for the non-intrusive inspection of containers, vehicles, baggage, parcels, and people. The non-intrusive aspect of these inspection devices is important; since the great majority of containers, vehicles, etc. are not carrying contraband, the public would not long tolerate the delays, disruption (and in some cases damage) of property, and invasions of privacy that would occur if "invasive" inspection means were commonly used. Non-intrusive inspection is typically non-destructive and can usually be accomplished faster than intrusive inspection. Thus increasing productivity of inspectors. Increased productivity means more parcels inspected and more contraband interdicted. (Ex. 1 at 56)
Among non-intrusive inspection methods, x-ray imaging in its many forms has been a proven technology capable of detecting a variety of contraband. X-ray systems have been based on transmission imaging in any of a variety of implementations: cone-beam (fluoroscopes), fanbeam, flying-spot, multi-projection configurations; dual-energy imaging; computed tomography; as well as on imaging incorporating the detection of x-ray radiation scattered in various directions. (Col. 1, lines 33-41)	Among the arsenal of non-intrusive inspection devices, x-ray imaging in its many forms has been a proven technology capable of detecting a variety of contraband. X-ray systems based on transmission imaging in any of a variety of implementations: cone-beam (fluoroscopes), fan-beam, flying-spot, multi-projection configurations (developmental); dual-energy imaging (used to distinguish organic materials); computed tomography (CT - also rare, because of cost, implementation and throughput limitations; and, since its invention by AS&E in 1986, backscatter imaging (also used to distinguish organic materials, but with other unique advantages discussed below). (Ex. 1 at 56)
With only a few exceptions, x-ray imaging systems for contraband detection have operated within the source-energy range of 70 keV to 160 keV. Since the penetrating	With only a few exceptions, x-ray imaging systems for contraband detection have operated within the source-energy range of 70 kV to 160 kV. Since the penetrating

The '623 Patent	The Army Contract
power of these sources is limited, inspection is limited to relatively small parcels and containers. A few large, expensive, high-energy transmission imaging systems have also been built for the inspection of large containers or vehicles. These systems typically operate within the range of 6 MeV to 12 MeV, require heavily-shielded, fixed installations, and provide no means to distinguish organic materials. (Col. 1, lines 42-52)	power of these sources is limited, inspection is limited to relatively small parcels and containers. (A few large, expensive, high-energy transmission imaging systems have also been built for the inspection of large containers or vehicles. These systems typically operate within the range of 6 MV to 12 MV, require heavily-shielded, fixed installations, and provide no means to distinguish organic materials.) (Ex. 1 at 56)
Radiant energy imaging with a scanning pencil beam is the subject of U.S. Pat. No. 3,780,291. The creation and use of images from scattered x-radiation in conjunction with direct transmission images is the subject of U.S. Pat. No. 5,313,511. These patents are hereby incorporated herein by reference. Neither of the foregoing references, nor any prior art known to the inventors herein, discloses or suggests how x-ray images, in a sense defined below, may be formed of cargo containers on the scale of motor vehicles or railroad cars using a source of penetrating radiation and detectors mounted on a mobile platform. (Col. 1, lines 53-63)	**3. Mobile CARGO SEARCH Utilized Patented Technologies** AS&E has received patents on the technology described in the Limited Rights Drawings. A summary of these follows: U.S. Pat. No. — Title RE. 28,544 [reissue of 3,780,291] — Radiant Energy Imaging with Scanning Pencil Beam (MICRO-DOSE Flying Spot) * * * 5,313,511 — X-Ray Imaging Particularly Adapated for Low Z Materials (Z Backscatter) (Ex. 1 at 109)
DETAILED DESCRIPTION OF SPECIFIC EMBODIMENTS As used in this description and in the appended claims, a "cargo container" is a receptacle for the storage or transportation of goods, and includes freight pallets as well as vehicles, whether motorized or drawn, such as	It is the principal objective of this proposed program to develop a fully-mobile version of the 450 kV CARGOSEARCH system, which can be taken to the location of the planned inspection and set up to scan objects up to the size of a tractor-trailer rig in a matter of minutes. To facilitate this use, it is intended that the

The '623 Patent	The Army Contract
automobiles, the cab and trailer of a truck, railroad cars or ship-borne containers. The term "cargo container," as used herein, further includes the structures and components of the receptacle. (Col. 2, lines 23-30)	proposed system shall have *only* backscatter imaging capabilities, but that it be possible to upgrade it to include transmission imaging capabilities should they be deemed necessary in the future. Figure 3 is an illustration of the proposed system in the process of scanning a parked car. It is also intended that the system be able to inspect other parked vehicles or stationary cargo containers. It also has the capability to inspect objects moving on a conveyor or other transport device, provided that the speed of transport falls is less than or equal to 6 inches per second. (Ex. 1 at 60)
The invention described herein serves to characterize materials which may be contained within a cargo container and thus not readily susceptible to visual scrutiny. The characteristics of a material which might be the object of non-invasive inspection and which lend themselves to detection using the device and method taught by the invention include, but are not limited to, electron density, atomic number, mass density, linear dimensions and shape. These characteristics are unveiled by taking advantage of the various physical processes by which penetrating radiation interacts with matter. Penetrating radiation refers to electromagnetic radiation of sufficient energy per photon to penetrate materials of interest to a substantial and useful degree and include x-rays and more energetic forms of radiation. The interaction of such radiation with matter can generally be categorized as either scattering or absorption processes. Both types of process remove x-ray photons from a collimated (i.e., directional) beam; scattering processes do so by deflecting photons	The physical processes by which x-rays interact with matter can generally be categorized as either scattering or absorption processes. Both types of process remove x-ray photons from a collimated (i.e., directional) beam; scattering processes do so by deflecting photons into new directions (usually with some loss of energy, which can be substantial), while absorption processes simply remove photons from the beam. Conventional transmission imaging measures the total beam attenuation as a function of position on the image plane, without discriminating between absorption and scattering processes. (Ex. 1 at 63)

The '623 Patent	The Army Contract
into new directions (usually with loss of energy), while absorption processes simply remove photons from the beam. (Col. 2, lines 31-52)	
Conventional transmission imaging measures the total beam attenuation as a function of position on the image plane, without discriminating between absorption and scattering processes. The total beam attenuation is described by a parameter called the mass attenuation coefficient, as commonly employed by persons skilled in the art of x-ray inspection. The mass attenuation coefficient is a characteristic of a particular material at a specific x-ray photon energy, and is independent of the imaging geometry. As such, it is the sum of individual coefficients (or "cross sections") for each relevant physical process, each of which varies differently with x-ray energy and with the atomic number (Z) of the interacting material. (Col. 2, lines 53-65)	Conventional transmission imaging measures the total beam attenuation as a function of position on the image plane, without discriminating between absorption and scattering processes. The total beam attenuation is described by a parameter called the mass attenuation coefficient. For a mono-energetic beam incident on a known thickness of a single material, the parameter is defined mathematically by taking the natural logarithm of the ratio of transmitted to incident flux, inverting the sign (to obtain a positive result), and dividing by the product of the density and thickness of the material. The mass attenuation coefficient is a characteristic of the particular material at a specific x-ray photon energy, and is independent of the imaging geometry. As such, it is the sum of individual coefficients (also known as "cross sections") for each relevant physical process, each of which varies differently with x-ray energy and with the atomic number (Z) of the interacting material. (Ex. 1 at 63-64)
In the range of photon energies useful for penetrating and screening cargo containers, the scattering contribution is dominated by incoherent, or Compton scattering, and the absorption contribution is dominated by the photoelectric effect. The cross sections for Compton scattering and photoelectric absorption vary with both the atomic number of the material and with the energy of the x-ray photon, but in very different ways. The photoelectric absorption	In the energy range of interest, the scattering contribution is dominated by incoherent, or Compton scattering, and the absorption contribution is dominated by the photoelectric effect. Other contributions (e.g., coherent scattering and pair production) are either insignificant or totally absent. The cross sections for Compton scattering and photoelectric absorption vary with both the atomic number of the material and with the energy of the x-ray

The '623 Patent	The Army Contract
decreases very rapidly with increasing photon energy, and increases very rapidly with increasing Z of the material. The Compton scattering cross section changes very slowly with energy and is only weakly dependent on atomic number. These functional relationships are illustrated in FIG. 1 [reproduced below] for two relevant materials (iron and heroin). 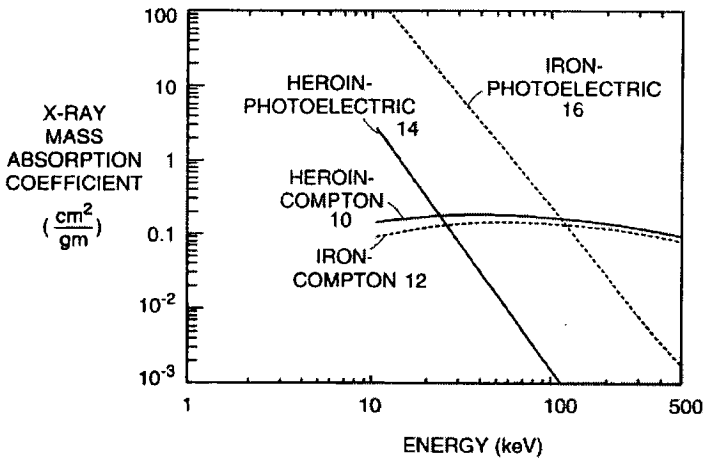 The Compton scattering cross section 10 for a low-Z material such as heroin and the Compton scattering cross section 12 for iron are nearly identical over the energy range of interest, and show little variation with energy. However, the photoelectric cross sections 14 and 16 are very different for the two materials, and both vary rapidly with energy. For heroin, the Compton scattering cross section 10 dominates the photoelectric cross section 14 for all x-ray energies above 20 keV. In contrast, for iron the photoelectric cross section 16 dominates for energies up to about 120 keV. Over the range from 60 keV to 400 keV, the	photon, but in very different ways. The photoelectric absorption decreases very rapidly with increasing photon energy, and increases very rapidly with increasing Z of the material. The Compton scattering cross section changes very slowly with energy and is only weakly dependent on atomic number. These functional relationships are illustrated in Fig. 4 [reproduced below] for two relevant materials (iron and heroin). 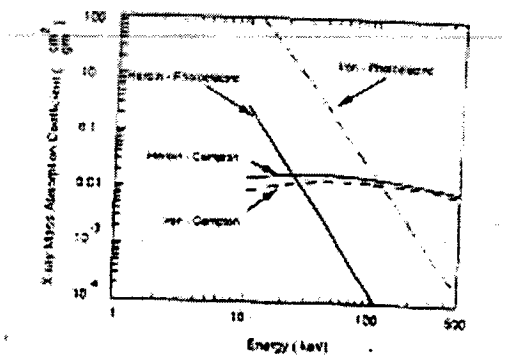 Figure 4. X-ray interaction coefficients for two materials, heroin and iron. The graph shows the Compton scattering and photoelectric absorption coefficients for each of the materials for X-ray photon energies from 10 to 500 keV. The Compton scattering cross sections for iron and heroin are nearly identical over the energy range of interest, and show little variation with energy. However, the photoelectric cross sections are very different for the two materials, and both very rapidly with energy. For heroin, the Compton scattering cross section dominates the photoelectric cross section for all x-ray energies above 20 keV. In contrast, for iron the photoelectric cross section dominates for energies up to about 120 keV. Over the

The '623 Patent	The Army Contract
total absorption coefficient (the sum of the Compton and the photoelectric coefficients) varies by less than a factor of two for heroin but by about a factor of 13 for iron. Such differences in scattering and absorption characteristics between low Z materials, characteristic of organic materials, and high Z materials, characteristic of most metals and their alloys, are typical and provide the means to differentiate between these two classes of materials. (Col. 3, line 66 – col. 4, line 30)	range from 60 keV to 400 keV, the total absorption coefficient (the um of the Compton and the photoelectric coefficients) varies by less than a factor of two for heroin but by about a factor of 100 for iron. Such differences in scattering and absorption characteristics between low Z materials, characteristic of organic materials, and high Z materials, characteristic of most metals, are typical and provide the means to differentiate between these two classes of materials. (Ex. 1 at 64-65)
Conventional transmission x-ray images-simply provide a map of the attenuation characteristics of the inspected object for the full spectrum of the x-ray beam. It should be noted that images may be directly displayed in graphic format for the visual inspection of human operators, but need not be so displayed. As used in this description and in the appended claims, the term "image" refers to any multidimensional representation, whether in tangible or otherwise perceptible form or otherwise, whereby a value of some characteristic is associated with each of a plurality of locations corresponding to dimensional coordinates of an object in physical space, though not necessarily mapped one-to-one thereonto. Thus, for example, the graphic display of the spatial distribution of some feature, such as atomic number, in one or more colors constitutes an image. So, also, does an array of numbers in a computer memory or holographic medium. Similarly, "imaging" refers to the rendering of a stated physical characteristic in terms of one or more images. (Col. 4, lines 31-48)	Conventional transmission x-ray images simply provide a map of the attenuation characteristics of the inspected object for the full spectrum of the x-ray beam. (Ex. 1 at 64)
Backscatter imaging in which the x-rays scattered by a material in a generally backward direction are employed	Backscatter imaging offers several unique inspection capabilities and operational features. (1) It is a one-sided

The '623 Patent	The Army Contract
offers several unique inspection capabilities and operational features. (1) Taken alone, it is a one-sided imaging modality: images can be obtained even when the object is accessible from only one side, or, the object is too thick to be penetrated radiographically. (2) Because the scatter signal falls off quite rapidly with increasing depth into the object, backscatter images effectively represent a "slice" of the object characteristic of the side nearest to the x-ray source; this image is frequently useful even when a transmission image representing the same scanned area is hopelessly confused by image clutter. (3) The underlying physical phenomenon that leads to scattered radiation is the Compton effect. Low atomic number (low Z) materials, which encompass organic materials, interact with x-rays principally by Compton scattering. Narcotic drugs, being among the densest of organic materials, tend to produce the brightest signatures in a backscatter image, as do organic explosives, making backscatter imaging a useful imaging modality for bomb or drug detection. (4) Alignment requirements of the x-ray beam with detectors or collimation devices are less exacting than for transmission imaging thereby enabling rapid deployment in a wide range of inspection scenarios. (Col. 4, line 49 – col. 5, line 5)	imaging modality: images can be obtained even when the object is accessible from only one side, or, the object is too thick to be penetrated radiographically. (2) Because the scatter signal falls off quite rapidly with increasing depth into the object, backscatter images effectively represent a "slice" of the object characteristic of the side nearest to the x-ray source; this image is frequently useful even when a transmission image representing the same scanned area is hopelessly confused by image clutter. (3) the underlying physical phenomenon that leads to scattered radiation is the Compton effect, which is a function not only of the density of the scattering material, but also of its atomic number; the scatter image therefore yields information about the atomic number of the object. Low atomic number (low Z) materials, which encompass organic materials, interact with x-rays principally by Compton scattering. Narcotic drugs, being among the densest of organic materials, tend to product the brightest signatures in a backscatter image. (Organic explosives also produce bright backscatter images, making it a useful imaging modality for bomb detection.) (4) The AS&E backscatter imaging technology does not require any alignment of the x-ray beam with detectors or collimation devices; and is therefore capable of rapid deployment in a wide range of inspection scenarios. (Ex. 1 at 57)
To the extent that Compton scattering removes x-ray photons from the x-ray beam, it contributes to the attenuation map image produced by transmitted x-rays. However, a scattered photon that is removed from one beam path projection and scattered into another contributes only an unwanted background or "fog" in the transmitted x-	To the extent that Compton scattering removes x-ray beam, it contributes to the attenuation map image. However, a scattered photon that is removed from one beam path projection and scattered into another contributes only an unwanted background or "fog" in the image. in cone-beam imaging geometries (e.g., film

The '623 Patent	The Army Contract
ray image. In cone-beam imaging geometries (e.g., film radiography), the scattered background can be a serious problem, and can, in fact, dominate over the transmitted x-ray image data. (Col. 5, lines 6-15)	radiography), the scattered background can be a serious problem, and con, in fact, dominate over the projection image data. (Ex. 1 at 66)
It is known to persons skilled in the art of x-ray inspection that high-Z and low-Z materials may be separately identified by measuring total attenuation at two different photon energies. This is the basis for the dual-energy systems in widespread use for airport baggage inspection. (Col. 5, lines 16-20)	It is theoretically possible to identify high- and low-Z materials separately by measuring total attenuation at two different photon energies, using transmission imaging alone. This is the basis for the dual-energy systems in widespread use for airport baggage inspection. (Ex. 1 at 66)
Another method to image low-Z materials is backscatter imaging. The technique relies upon the direct detection of photons which have been Compton scattered. An image is created that is separate and independent of any transmission image that may be produced at the same time. Since the photoelectric absorption cross section is small for organic materials, they interact almost entirely through Compton scattering, producing relatively large scatter signatures. Metals, on the other hand, interact almost exclusively by photoelectric absorption, so that their scatter image signature is comparatively small. The backscatter image directly reveals organic materials such as drugs or explosives. (Col. 5, lines 21-33)	Another method to image low-Z materials is backscatter imaging. The technique relies upon the direct detection of photons which have been Compton scattered. An image is created that is separate and independent of any transmission image that may be produced at the same time. Since the photoelectric absorption cross section is small for organic materials, they interact almost entirely through Compton scattering, producing relatively large scatter signatures. Metals, on the other hand, interact almost exclusively by photoelectric absorption, so that their scatter image signature is comparatively small. The backscatter image directly reveals organic materials such as drugs or explosives. (Ex. 1 at 66)
Flying-spot technology makes possible the acquisition of images using detectors specifically positioned to collect the scattered x-rays. In a typical flying-spot system, a thin "pencil beam" of x-rays is rapidly and repetitively swept through a source-centered, vertically-oriented "fan" of beam paths that are arranged to intercept the object under inspection. At the same time, the object is moved at a	AS&E's proprietary MICRO-DOSE® imaging technology is based on the use of mechanically generated flying-spot x-ray beam. In a typical flying-spot system, a thin "pencil beam" of x-rays is rapidly and repetitively swept thorough a source-centered, vertically-oriented "fan" of beam paths that are arranged to intercept the object under inspection. At the same time, the object is moved at a constant,

The '623 Patent	The Army Contract
constant, slower speed along a path perpendicular to the fan, on a horizontally moving conveyor belt for example. In this way, the pencil beam is made to traverse the object in point-by-point raster fashion, and the entire object is scanned as it passes through the fan plane over a period ranging from a few seconds to a few minutes depending upon the length of the object. (Col. 5, lines 34-47)	slower speed along a path perpendicular to the fan, on a horizontally moving conveyor belt for example. In this way, the pencil beam is made to traverse the object in point-by-point "raster" fashion, and the entire object is scanned as it passes through the fan plane over a period ranging from a few seconds to a few minutes depending upon the length of the object. (Ex. 1 at 67)
Although the total scan time is seconds to minutes in duration, the actual exposure time of any part of the scanned object is only the time it takes for the pencil beam to sweep across that pixel. That exposure time is typically in the range of 8 to 64 microseconds, depending on the design and the application, and yields an entrance exposure to the scanned object of only tens or hundreds of microroentgens. This low dose to the object also means that there is little radiation available to scatter into the environment, so the doses to operators and other bystanders is correspondingly low. Separate, large-area detectors are deployed adjacent to the beam plane on the x-ray source side of the scanned object, and with their active surfaces oriented toward the scanned object. These detectors need only provide a large solid angle for collection of scattered radiation; no critical alignments are required. In this location these detectors respond to x-rays which are scattered generally back toward the source from the object. (Col. 5, lines 48-65)	Although the total scan time is seconds to minutes in duration, the actual exposure time of any part of the scanned object is only the time it takes for the pencil beam to sweep across that pixel. That exposure time is typically in the range of 8 to 64 microseconds, depending on the design and the application, and yields an entrance exposure to the scanned object of only tens or hundreds of *micro*roentgens. (By comparison, th eentrance exposure for many medical x-ray procedures is on the order of 1 roentgen.) This low dose to the object also means that there is little radiation available to scatter into the environment, so the doses to operators and other bystanders is correspondingly low. (Ex. 1 at 67) Separate, large-area detectors are deployed adjacent to the beam plane on the x-ray source side of the scanned object, and with their active surfaces oriented toward the scanned object. These detectors need only provide a large solid angle for collection of scattered radiation; no critical alignments are required alignments are required. In this location these detectors respond to x-rays which are scattered generally back toward the source from the object.

The '623 Patent	The Army Contract
	(Ex. 1 at 68)
Typically, the transmission x-ray signature of organic materials is relatively weak in comparison to that of higher density, higher atomic-number materials such as metals. Since the x-ray transmission image is a result of interactions throughout a path through the entire object, larger and more complex objects such as cargo containers produce more confusing transmission images. Under these circumstances, even the presence of small amounts of metal and normal expected organic materials can produce extremely cluttered images masking the sought-for contraband. Image interpretation then becomes an overwhelming task. Frequently, most of the useful information is obtained from the backscatter image alone. (Col. 5, line 66 – col. 6, line 11)	Typically, the transmission x-ray signature of organic materials is relatively weak in comparison to that of higher density, higher automatic-number materials such as metals. Since the x-ray transmission image is a result of interactions throughout a path through the entire object; since larger and more complex the object produce more confusing transmission images. Under these circumstances, even the presence of small amounts of metal and normal expected organic materials can produce extremely cluttered images masking the sought-for contraband. Image interpretation then becomes an overwhelming task. This is illustrated by Figure 5, which shows both transmission and backscatter images obtained by the prototype CARGOSEARCH system for Otay Mesa. The lower, scatter image fully detects the concealed narcotic and explosive simulants, including those missed by the transmission image. Frequently, most of the useful information is obtained from the backscatter image alone: There are situations where the transmission image does provide additional information, however this may be of limited value due to image clutter by this information. (Ex. 1 at 68)
In a preferred embodiment of the present invention, the cargo container inspection device uses flying-spot x-ray imaging and backscatter imaging technologies. Equipment costs can be reduced if backscatter imaging is used to the exclusion of other modes of x-ray interrogation of the contents of the cargo container. (Col. 6, lines 12-17)	The proposed Mobile CARGOSEARCH system is based on AS&E's proprietary MICRO-DOSE® flying-spot x-ray imaging and Z® backscatter imaging technologies. To significantly reduce equipment costs and facilitate deployment and operation, the system is configured to use only the backscatter imaging capabilities of those technologies. (Ex. 1 at 70)
Referring now to FIG. 2A [reproduced below], a perspective	Fig. 3 [reproduced below] is an illustration of the proposed

The '623 Patent	The Army Contract
view is shown of a cargo container inspection system, designated generally by numeral 20, in accordance with a preferred embodiment of the invention. 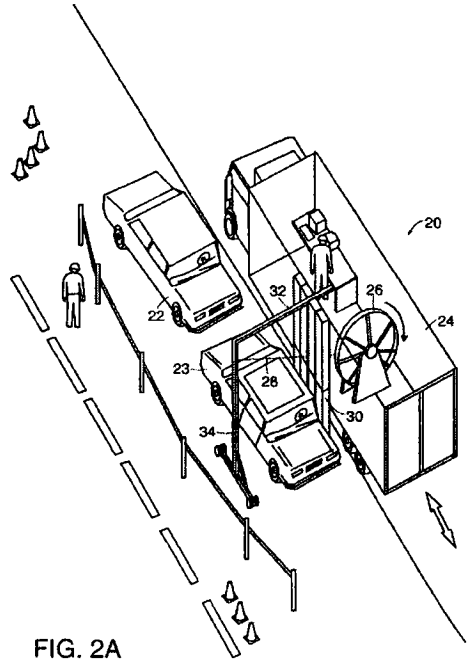 FIG. 2A Cargo container inspection system 20 is shown deployed for inspection of passenger cars 22 and 23. FIG. 2B shows a preferred embodiment of the invention. With reference to FIGS. 2A and 2B, a truck 24, typically 35' long.times.8' wide.times.10'6" high, houses and supports the x-ray inspection equipment, ancillary support and analysis systems, and a hydraulic slow-speed drive mechanism to provide the scan motion. Truck 24 serves as both the platform on which the mobile system is transported to its intended operating site, and a bidirectional translation stage, otherwise referred to herein as a "bed," to produce	system in the process of scanning a parked car. 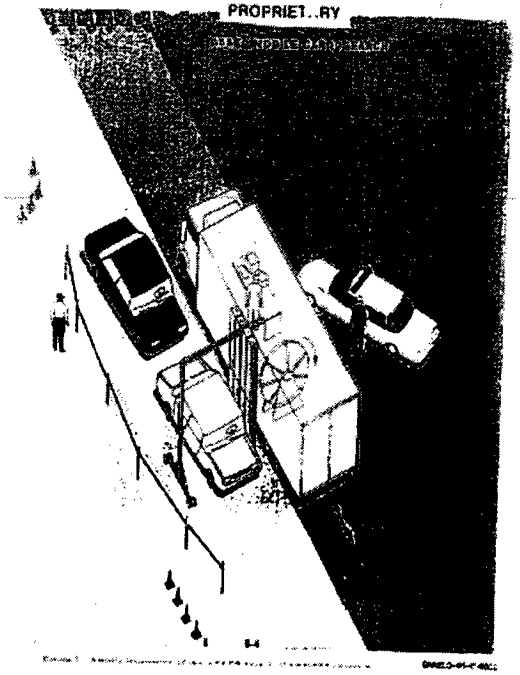 (Ex. 1 at 60-61) The major new development required is the truck and its accessories. The truck will be a custom-built 21' long x 8' wide x 10'6" high "box" large enough to house and support the imaging equipment, a power generator, HVAC equipment, a deployable beam stop (not shown in the layout drawings), and a hydraulic slow-speed drive mechanism to provide the scan motion. The truck serves as both the platform on which the mobile system is transported to its intended operating site, and a bi-directional translation stage to produce the relative motion required during a scan.

The '623 Patent	The Army Contract
the relative motion required during a scan. Chopper 26 is used, in accordance with flying spot generation techniques known to persons skilled in the art, to scan beam 28 of penetrating radiation recursively in a vertical direction. Radiation scattered by the contents of the cargo container, shown here as passenger car 23, is detected by x-ray backscatter detectors 30. Boom 32 allows beam stop 34 to track beam 28 as truck 24 advances in scanning past the cargo container. Beam stop 34 is also referred to as a "beam catcher." In addition or alternatively to beam stop 34, an x-ray transmission detector may be mounted in opposition to beam 28, tracking beam 28 on the distal side of the scanned cargo container. (Col. 6, lines 18-43)	(Ex. 1 at 70) AS&E's proprietary MICRO-DOSE® imaging technology is based on the use of mechanically generated flying-spot x-ray beam. In a typical flying-spot system, a thin "pencil beam" of x-rays is rapidly and repetitively swept thorough a source-centered, vertically-oriented "fan" of beam paths that are arranged to intercept the object under inspection. At the same time, the object is moved at a constant, slower speed along a path perpendicular to the fan, on a horizontally moving conveyor belt for example. In this way, the pencil beam is made to traverse the object in point-by-point "raster" fashion, and the entire object is scanned as it passes through the fan plane over a period ranging from a few seconds to a few minutes depending upon the length of the object. (Ex. 1 at 67) To facilitate this use, it is intended that the proposed system shall have *only* backscatter imaging capabilities, but that it be possible to upgrade it to include transmission imaging capabilities should they be deemed necessary in the future. (Ex. 1 at 60)
Referring now to FIG. 3 [reproduced below], a top schematic view of the layout of the system shown in FIG. 2B, is depicted as configured for transport.	Figure 6 [reproduced below] shows the preliminary plan-view layout of the system in the configuration for transport.

The '623 Patent	The Army Contract
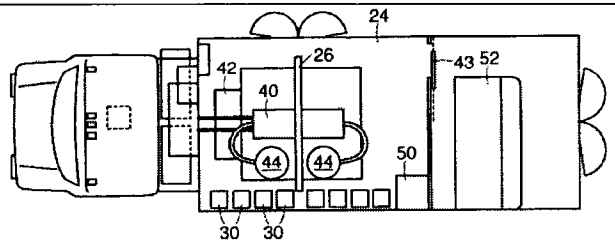 FIG. 3 FIG. 4 [reproduced below] is the corresponding side elevation, additionally showing the detectors in one of two available deployed positions. 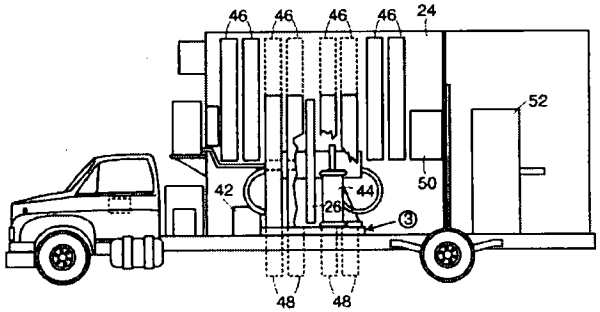 FIG. 4 The modular components comprising the cargo container inspection system are: the penetrating radiation source assembly 40; x-ray high voltage generating subsystem including high voltage power supply 42 and high voltage tanks 44; backscatter detector modules 30, comprised of an upper bank 46 of detectors and a lower bank 48 of detectors; detector electronics module 50; and operator's console 52. The dashed position of upper backscatter detector banks 46 indicate the position for inspection of cargo containers. The x-ray source 40, high-voltage power	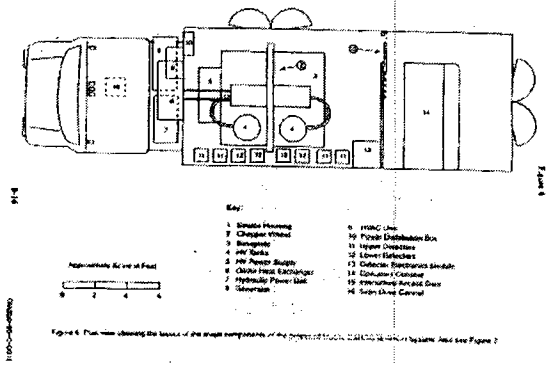 Figure 7 [reproduced below] is the corresponding side elevation also showing the detectors in one of two available deployed positions. 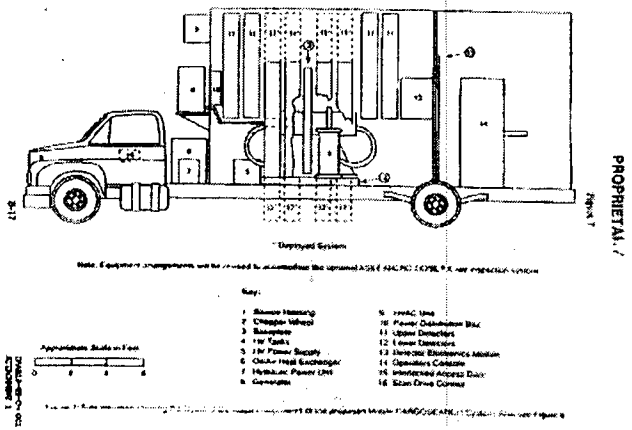 Most of the components of the scanning and imaging sub-system are based on modular components developed for the Otay Mesa CARGOSEARCH system. These components are used without modification except as required specifically for this mobile platform or for the revised scan geometry required by this application. These modular components are: x-ray the source assembly, x-ray

The '623 Patent	The Army Contract
supply 42, and positive and negative high-voltage tanks 44, are all in accordance with ordinary practice in the art of x-ray generation. In a preferred embodiment of the invention, a 450 kV x-ray tube is employed. (Col. 6, lines 44-61)	high voltage generating subsystem, backscatter detector modules, detector electronics module, operator's console, and interconnecting cables. (Ex. 1 at 70) The x-ray generating system comprises a high-voltage power supply (HVPS) and its microprocessor control unit, positive and negative high-voltage tanks, a pair of high-voltage cables, a 450 kV x-ray tube (slightly modified by AS&E), an oil-to-air heat exchanger, and miscellaneous interconnecting cables and accessories. (Ex. 1 at 76)
FIG. 5A [reproduced below] shows a cargo container inspection system 20, in accordance with a preferred embodiment of the invention, as deployed for inspection of a full-sized tractor-trailer 60 while FIG. 5B [also reproduced below] shows the same cargo container inspection system 20 deployed for inspection of a passenger van 62. 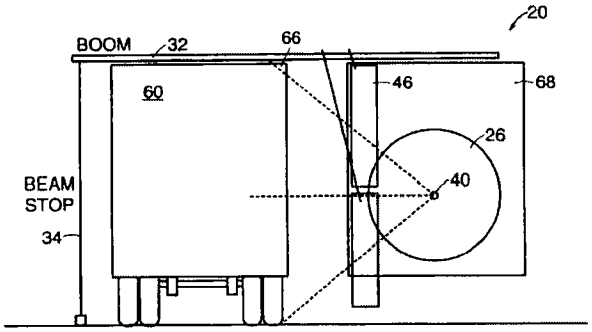 FIG. 5A	Figure 8 [reproduced below] shows the Mobile CARGOSEARCH scan geometry as deployed for inspection of a full-sized tractor-trailer (top) or a passenger car (bottom). 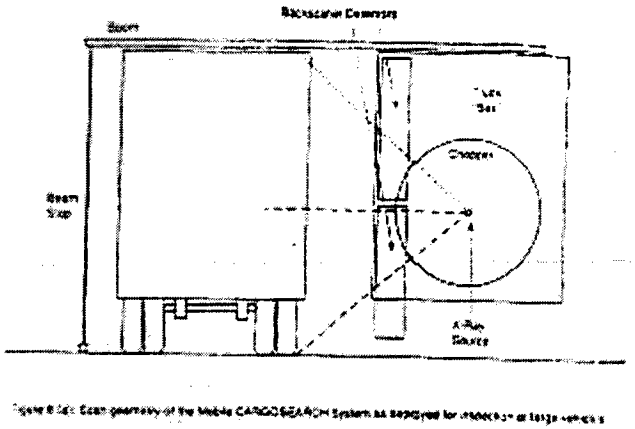

The '623 Patent	The Army Contract
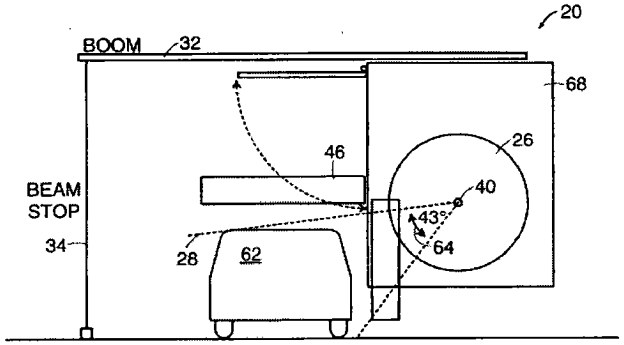 FIG. 5B The angle of elevation 64 of the 43° scanning beam can be changed depending upon the application. For optimum versatility, the range of limiting angles extends from at least 55° below horizontal to 55° above horizontal. This corresponds to an angular adjustment of the source axis from -33.5° to +33.5°. (Col. 6, line 62 – col. 7, line 5)	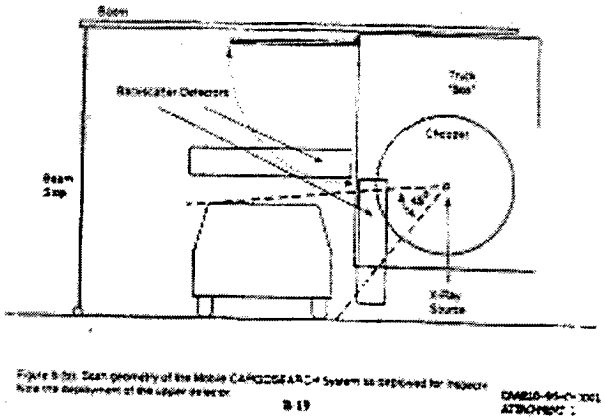 The angle of elevation of the 43° scanning beam can be changed depending upon the application. For optimum versatility, the range of limiting angles will extend from at least 55° below horizontal to 55° above horizontal. This corresponds to an angular adjustment of the source axis from -33.5° to +33.5°. (Ex. 1 at 70, 74)
Operationally, one side of a large truck 60 (up to 14' height), as depicted in FIG. 5A, can be completely covered in three passes; however, in many cases, satisfactory coverage can be achieved in two passes. The system operators must choose between doing a third pass or tolerating a small amount of corner cutoff 66, in which case, higher inspection throughput can be achieved. Since the scanning system is bi-directional, alternate passes can be in the forward and reverse directions. (Col. 7, lines 6-14)	Operationally, one side of a large truck (up to 14' height) can be completely covered in two passes; however, slightly better resolution and significantly better sensitivity can be achieved by scanning as close as possible to the inspected vehicle. To achieve this optimum performance, the system operators must choose between doing a third pass or tolerating a small amount of corner or midline cutoff. A small amount of corner cutoff is shown in Figure 8, but ideally it might be better to sacrifice a little more and to pass 1 or 2 feet closer to the truck. Since the scanning system is bi-directional, alternate passes can be in the forward and reverse directions. (Ex. 1 at 73

The '623 Patent	The Army Contract
Operationally, one-side of passenger cars and small trucks is scanned in a single pass of the system. Depending upon the situation, it may be necessary to scan the opposite side as well. The upper set 46 of backscatter detectors can be deployed over the top of smaller vehicles as shown in FIG. 5B [reproduced below], substantially improving the scatter collection efficiency and producing higher quality images. Backscatter detector modules 46 and 48, two are typically 6' long and 1' wide, and each typically comprises four segments. (Col. 7, lines 15-23)	Operationally, one-side of passenger cars and small trucks is scanned in a single pass of the system. Depending upon the situation, it may be necessary to scan the opposite side as well. The upper set of detectors can be deployed over the top of smaller vehicles as shown in Figure 8 [reproduced below], substantially improving the scatter collection efficiency and producing higher quality images. (Ex. 1 at 73) Four backscatter detector modules are shown in Figure 9. Two detectors are positioned vertically in mid-frame. Two are located horizontally, below the transport device on which the automobile is placed. Each of these modules are 7 feet long. It will be necessary to shorten the detector modules to 6 feet in length. So as not to exceed the maximum permissible vehicle height. (Ex. 1 at 76)
In a preferred embodiment of the invention, the cargo container inspection system has two scan-speed modes: nominally 3 inches/sec and 6 inches/sec. The faster speed results in higher throughput, the slower mode--higher image quality. In accordance with one embodiment of the invention, image data in either mode is acquired into a 1024.times.4096.times.12 bit image memory and displayed onto a 1024.times.1024 high-resolution display via a continuously-adjustable 12-bit-to-8-bit look-up table. Additional displays can be provided to allow simultaneous viewing of more than one image, or, alternatively, images may be superposed or combined, as known to persons skilled in the art. (Col. 7, lines 24-35)	The Mobile CARGOSEARCH system will have two scan-speed modes: nominally 3"/sec and 6"/sec. The faster speed will result in higher throughput, the slower mode higher image quality. Image data in either mode will be acquired into a 1024 x 4096 x 12 bit image memory and displayed onto a 1024 x 1024 high-resolution display via a continuously-adjustable 12-bit-to-8-bit look-up table. The proposed system is configured with only a single display, therefore only a single scan can be displayed at a time. Optional additional displays can be provided to allow simultaneous viewing of more than one image. (Ex. 1 at 73)
Backscatter detectors are mounted to allow efficient	Instead of the simple brackets currently used in the fixed

The '623 Patent	The Army Contract
collection of scattered radiation from close to the road surface, all the way to the roof of the inspected container. A motorized mechanism enables the upper set of detectors to be deployed over a small vehicle, as shown in FIG. 5B, though other means of deployment are readily apparent to persons skilled in the mechanical arts and are within the scope of the invention. (Col. 7, lines 36-43)	deployment, the detectors will need to mount onto counter-balanced slide mechanisms that will allow the lower set to be deployed downward, close to the road surface, and the upper set to move in close to the x-ray beam plane. These motions are shown in Figures 6 and 7. A pivot and crank mechanism is required to enable the upper set of detectors to be deployed over a small vehicle, as shown in Figure 8. (Ex. 1 at 76)
The operator's console 52 (shown in FIG. 3), provides for the console operator to control the x-ray system and display images. Various display monitors may be provided. One preferred embodiment has an upper display for transmission images, and a lower display for the corresponding backscatter image. Similarly, various display functions may be provided: Zoom, pan and scroll--Joystick controls allow the operator to display any part of the image at 2x and 4x magnifications. Continuous density expand--This contrast-enhancing feature allows the operator to display any contiguous subset of the 12-bits (4096 digital intensity levels) of image data over the full black-to-white range of grey levels on the display monitors. The implementation is through a set of 10 pre-set push buttons, along with a trackball for fine-tuning. Edge enhancement--A mathematical algorithm sharpens the image and extends the effective dynamic range of the display for faster and easier image analysis.	The current Operator's Console, for control of the CARGOSEARCH system and display of the images is shown in Figure 10. The scan controls and display controls are mounted into the writing shelf in the foreground. Four display monitors are shown: the upper displays are for two transmission images (one from each side), and the lower displays are for the corresponding backscatter images. The following display functions are provided: o Zoom, pan and scroll - Joystick controls allow the operator to display any part of the image at 2x and 4x magnifications. o Pan trim - This feature, applicable only when double-sided scans are done, allows the operator to adjust the zoomed fields-of-view separately to facilitate comparative analysis of the two images. o Continuous density expand - This contrast-enhancing feature allows the operator to display any contiguous subset of the 12-bits (4096 digital intensity levels) of image data over the full black-to-white range of grey levels on the display monitors. The implementation is through a set of 10 pre-set push buttons, along with a trackball for fine-tuning.

The '623 Patent	The Army Contract
Reverse video--Operators may select between positive (black-on-white) or negative (white-on-black) image display, depending on personal preference. Image archiving--Operators may "mark and annotate" the images from the console keyboard, and store them on optical disk for future recall. (Col. 7, line 44 – col. 8, line 3)	o Edge enhancement - A mathematical algorithm sharpens the image and extends the effective dynamic range of the display for faster and easier image analysis. o Reverse video - Operators may select between positive (black-on-white) or negative (white-on-black) image display, depending on personal preference. o Image archiving - Operators may "mark and annotate" the images from the console keyboard, and store them on optical disk for future recall. (Ex. 1 at 76, 78)
Truck 24 containing cargo container inspection system 20 is fitted with a custom-built box (or truck body) 68 (shown in FIGS. 5A and 5B) specified to accommodate the imaging equipment, and to provide support structures, environmental control, and electrical power distribution. (Col. 8, lines 4-8)	The truck will be fitted with a custom-built body ("box") specified to accommodate the imaging equipment, and to provide the support structures required. The interfaces will be specified by AS&E prior to placement of the order. The body will include HVAC equipment sufficient to handle the anticipated thermal loads. An extension on the forward end of the body will support components that are best located outside of the enclosed volume: a power generator, hydraulic equipment for the slow-drive mechanism, and the x-ray tube heat-exchanger. (Ex. 1 at 78-79)
Truck 24 is provided with both front- and rear-wheel drive: Standard rear-wheel drive from the truck's engine is used for normal over-the-road travel. An alternative drive mode is powered by a low-RPM hydraulic motor to obtain the very low speeds employed for the scan. The two drives are connected via a switchable gearbox to preclude the possibility of having both active at the same time. The	The truck will be provided with a both front- and rear-wheel drive. Standard rear-wheel drive is used for normal over-the-road travel. Instead of being coupled into a transmission from the truck's engine, the front-wheel drive will be powered by a low RPM hydraulic motor to obtain the very low speeds – 3"/sec and 6"/sec -- needed for the scan. Recent tests at AS&E have shown that it is not

The '623 Patent	The Army Contract
hydraulic motor controls, including speed selection, drive direction, and motion start/stop, are located in the cab of the truck under the control of the driver. As an additional safety feature, actuation of the truck's brake will automatically cause disengagement of the hydraulic clutch. A similar arrangement using a hydraulically-powered front or rear wheel drive is known in the art for other special applications requiring very slow vehicle motion. (Col. 8, lines 9-23)	practical to use the trucks engine to obtain smooth slow speeds required for the x-ray scan. To prevent damage to the hydraulic system, the front-wheel drive will be connected via an interlocked clutch to preclude the possibility of having both connected drives in operation at the same time. The hydraulic motor controls, including speed selection, drive direction, and motion start/stop, are located in the cab of the truck under the control of the driver. As an additional safety feature, actuation of the truck's brake will automatically cause disengagement of the hydraulic clutch. A similar arrangement using a hydraulically-powered front wheel drive is sometimes used for other special applications such as requiring very slow vehicle motion. (Ex. 1 at 79)
Deployable beam stop 34 is employed to assure compliance with FDA radiation safety requirements. However, the output radiation of the system is so low that the health and safety requirements for low radiation levels is met only a few feet away from the source even if no beam stop is used. Beam stop 34 uses a dense shielding material such as lead that is deployed from the end of a boom 32 that extends about 14' from the side of truck 24 at the location of the x-ray beam 28. Generation of x-rays is prevented by interlock circuits unless boom 32 and beam stop 34 are properly deployed. (Col. 8, lines 24-34)	In order to assure compliance with FDA radiation safety requirements as administered by the Center for Devices and Radiological Health (CDRH), the proposed system has provisions for a deployable beam stop device. However, the output radiation of the system is so low that the health and safety requirements for low radiation levels will be met only a few feet away from the source *even if no beam stop is used.* * * * The present concept for the beam stop uses two or three layers of leaded-vinyl shielding material (commonly used for baggage x-ray systems in airports) that would be deployed from the end of a boom that extends about 14' from the side of the truck at the location of the x-ray beam - refer to Figure 3. Generation of x-rays will be prevented

The '623 Patent	The Army Contract
	by interlock circuits unless the boom and the vinyl are properly deployed. (Ex. 1 at 79)
To stow the beam stop for road travel, the beam stop is retracted into the hollow boom 32. Boom 32 is then rotated parallel to the truck axis and lowered into a cradle in truck box 68. (Col. 8, lines 35-38)	To stow the beam stop for road travel, the vinyl is retracted into the hollow boom, and the boom itself is swung into orientation parallel to the truck axis and lowered into a cradle in the roof of the truck. (Ex. 1 at 79)
The scan motion is exceedingly slow--1/3 to 1/6 of a mile per hour. An audible alarm is actuated whenever the scan drive mechanism is engaged for motion in either direction. Since this motion also coincides with x-ray generation, the audible warning also provides an "X-RAYS ON" warning. The x-ray high voltage power supply 42 is interlocked so that it cannot be energized unless both chopper wheel 26 is up to speed and truck 24 is in motion. This additional safety precaution ensures that the scanning beam will not be stationary over any one region of space for a long time, thus ensuring low delivered dose. (Col. 8, lines 39-49)	Although the scan motion is exceedingly slow - 1/3 to 1/6 of a mile per hour - AS&E will design for an audible alarm to be actuated whenever the scan drive mechanism is engaged for motion in either direction. Since this motion will also coincide with x-ray generation, the audible warning will also provide an "X-RAYS ON" warning. The X-ray generator will be interlocked *so* that it cannot be energized unless *both* the chopper wheel is up to speed and the truck is in motion. This additional safety precaution ensures that the scanning beam will not be stationary over any one region of space for a long timer thus ensuring low delivered dose. (Ex. 1 at 80)
Operation will be described as it applies to the inspection of one or more passenger cars; scanning of large vehicles will be similar, except that the upper detectors do not need to be swung outboard in this case. It will also be assumed that the system will first be set up, and that vehicles to be scanned will then be brought to it. An alternative whereby the system is deployed beside parked vehicles or containers calls for a minor variation of procedures. (Col. 8, lines 50-57)	Operation will be described as it applies to the inspection of one or more passenger cars; scanning of large vehicles will be similar, except that the upper detectors do not need to be swung outboard in this case. It will also be assumed that the system will first be set up, and that vehicles to be scanned will then be brought to it. An alternative whereby the system is deployed beside parked vehicles or containers calls for a minor variation of procedures. (Ex. 1 at 80)
Upon arrival at the intended inspection site, the operators will first assure that the site is suitable: i.e., that there is a	Upon arrival at the intended inspection site, the operators will first assure that the site is suitable: i.e., that there is a

The '623 Patent	The Army Contract
sufficient space available for system operation and that operating space can reasonably be secured for safe operations. They will then position the truck at the starting position for the first scan, assuring that there is sufficient room to move the truck ahead for the required scan distance, usually about 65 feet. (Scans will normally alternate, forward and back; it is also possible to scan sequentially in the forward direction only, to scan a continuous line of parked vehicles for example, provided that the necessary space is free.) Once positioned, the on-board generator is started to provide power for system operation, lighting, and a cooling unit. Operator's console 52 is powered up at this time. (Col. 8, line 58- col. 9, line 4)	sufficient footprint available for system operation and that footprint can reasonably be secured for safe operations. They will then position the truck at the starting position for the first scan, assuring that there is sufficient room to move the truck ahead for the required scan distance, usually about 65 feet. (Scans will normally alternate, forward and back; it is also possible to scan sequentially in the forward direction only, to scan a continuous line of parked vehicles for example, provided that the necessary space is free.) Once positioned, the on-board generator is started to provide power for system operation, lighting, and the HVAC unit. The Operator's Console is powered up at this time, allowing the system electronics to warm up. (Ex. 1 at 81)
The operators then manually deploy the backscatter detectors and the beam stop using a motorized mechanism provided for that purpose. Only the upper set of detectors 46 deploy, as shown in FIG. 5B. The beam stop is deployed by rotating the boom into a position orthogonal to the truck, and then lowering the beam stop out of the boom to its preset limit. This action closes an interlock circuit that is required before x-ray generation is possible. An x-ray tube warm-up sequence, if necessary, is then initiated from operator console 52. (Col. 9, lines 5-14)	The operators then manually deploy the backscatter detectors and the beam stop. The bottom set of four detectors lower to a few inches above the road surface. The upper pairs of detectors slide inward towards the x-ray plane, and their tops swing outward into a horizontal position with the aid of a winch. The beam stop is deployed by manually cranking the boom into a position orthogonal to the truck, and then pulling the leaded vinyl sheets down to their stops. This action closes an interlock circuit that is required before x-ray generation is possible. (Ex. 1 at 81)
Following warmup, the physical configuration of the system setup is completed by rotating the x-ray beam angle to the direction (elevation) required for the intended scan operations. This is done by a manually-actuated electric motor, and with the aid of an indicator gauge to assist in setting the desired scan elevation. Scanning operations can then commence.	The physical configuration of the system setup is completed by rotating the x-ray beam angle to the direction (elevation) required for the intended scan operations. This is done by a manually-actuated electric motor, and with the aid of an indicator gauge to assist in setting the desired scan elevation. The interlocked access door is then closed, and the x-ray tube warmup sequence initiated from

The '623 Patent	The Army Contract
(Col. 9, lines 15-21)	the console. This process takes about 10 to 15 minutes (depending on how much time has elapsed since the last operation), and completes the system setup. (Ex. 1 at 81)
Scan operations are simple and straightforward. One or more vehicles are directed to positions along the scan path (up to 65 feet of total vehicle length may be imaged in a single scan) and the drivers and passengers exit the vehicles. (Col. 9, lines 22-25)	Scan operations are simple and straightforward. The Scan Coordinator directs one or more vehicles to positions along the scan path (up to 65' of total vehicle length may be imaged in a single scan) and instructs the drivers and passengers to exit the vehicles. (Ex. 1 at 81)
Using menu-driven software, the system's computer is readied for image acquisition. This places the computer and data acquisition electronics into a status wherein c-rays will be initiated and image acquisition started upon receipt of a "scan" command initiated by the system's slow-speed drive controls. The computer also transmits a "ready" status signal to the scan drive control located next to the driver of truck 24. (Col. 9, lines 26-33)	The Console Operator, using menu-driven software, readies the system's computer for image acquisition. This places the computer and data acquisition electronics into a status wherein x-rays will be initiated and image acquisition started upon receipt of a "scan" command initiated by the system's slow-speed drive controls. It also transmits a "ready" status signal to the Scan Drive Control box located next to the Scan Operator's position in the truck cab. (Ex. 1 at 82)
The driver sets the desired scan speed and direction at the scan drive control. After the "ready" status is received from the computer, the driver starts the scan by pushing a "start" button and releasing the truck brakes. "Start" initiates motion via the slow-speed drive. The driver has continuous control over the truck. He is responsible for steering, and may stop the truck at any time by actuating the brake. Otherwise, the scan will stop automatically after a full data set has been acquired by the computer (and the "ready" status is removed). (Col. 9 , lines 34-43)	The Scan Operator, meanwhile, has assured that the truck transmission is out of gear and that the hydraulic drive system is powered up.. He has also set the desired scan speed and direction at the Scan Drive Control. When the "ready" status signal is received from the computer he can start the scan at any time by pushing a "Start" button and releasing the truck brakes. "Start' initiates motion via the slow-speed drive. The Scan Operator continues to have control over the truck. He is responsible for steering, and may stop the truck at any time by actuating the brake. Otherwise, the scan will stop automatically after a full data set has been acquired by the computer (the 'ready" status

The '623 Patent	The Army Contract
	is removed). (Ex. 1 at 82)
As soon as the truck is in motion, a "scan" signal is sent to the computer. The computer then triggers the x-ray generator to ramp up to its pre-set operating conditions, and upon confirmation that they have been reached (about 5 seconds later) it starts data acquisition. Data acquisition continues until either the "scan" command is interrupted or the image memory is full. (Col. 9, lines 44-50)	As soon as the Scan Drive Control has initiated (and verified) truck motion, it sends a "scan" signal to the computer. The computer then triggers the x-ray generator to ramp up to its pre-set operating conditions, and upon confirmation that they have been reached (about S seconds later) it starts data acquisition. Data acquisition continues until either the "scan" command is interrupted or the image memory is full. (Ex. 1 at 82)
To break the system down for transportation, electronic systems are shut down and the beam stop and detector mechanisms are retracted and secured for travel. The hydraulic drive is disengaged and its power shut off. The generator is switched off. (Col. 9, lines 51-55)	Breaking the system down for transportation is even quicker and easier than the setup process. Electronic systems are shut down and the beam stop and detector mechanisms are retracted and secured for travel. The hydraulic drive is disengaged and its power shut off. The generator is switched off. (Ex. 1 at 82)
In a further embodiment, preferred in various applications, the intensity of the transmitted x-ray beam may be measured by a single, elongated transmission detector located on the opposite side of the inspected object from the x-ray source and carefully aligned with the plane of the x-ray beam. The detector is designed to accept and respond to x-rays striking anywhere along the length of its linear entrance slit. The detector is oriented so that the flying-spot beam sweeps repetitively from end-to-end along the slit while truck 24 moves past the inspected object. The detected signal is amplified, integrated, sampled and digitized into an image memory over many sequential, short time intervals during each sweep of the pencil beam. Each such digitized sample forms one pixel of the final image,	The intensity of the transmitted x-ray beam is measured by a single, elongated transmission detector located on the opposite side of the inspected object from the x-ray source and carefully aligned with the plane of the scanning pencil beam. The detector is designed to accept and respond to x-rays striking anywhere along the length of its linear entrance slit. The detector is oriented so that the flying-spot beam sweeps repetitively from end-to-end along the slit while the object moves past the beam plane and the detector. The detected signal is amplified, integrated, sampled and digitized into an image memory over many sequential, short time intervals during each sweep of the pencil beam. Each such digitized sample forms one pixel of the final image, and the series of samples acquired

The '623 Patent	The Army Contract
and the series of samples acquired during one sweep of the beam constitutes one line of image data--typically 1024 samples per line. A complete image frame is constructed by acquiring successive lines as the object is moved through the scan plane. (Col. 9, line 56 – col. 10, line 6)	during one sweep of the beam constitutes one line of image data – typically 1024 samples per line. A complete image frame is constructed by acquiring successive lines as the object is moved through the scan plane. (Ex. 1 at 67)
In the flying beam mode, the positional image information is acquired by correlating the instantaneous detector output with the position of the flying-spot beam at that instant of time. In a corresponding "fanbeam" system an entire line is illuminated at once and individual pixels along the line are acquired either by a large number of discrete detectors arranged along the line, or one or more detectors with positional sensitivity. The transmission detector may comprise scintillators optically coupled to photomultiplier tubes. This method is more efficient and less noisy than using a photodiode array. The resulting improvement in signal/noise allows equivalent images to be made at lower doses and with lower beam energies. (Col. 10, lines 7-19)	In effect, the positional image information is acquired by correlating the instantaneous detector output with the position of the flying-spot beam at that instant of time. In a corresponding "fan-beam" system an entire line is illuminated at once and individual pixels along the line are acquired either by a large number of discrete detectors arranged along the line, or a positionally sensitive detector. The transmission detector used in the AS&E MICRO-DOSE technology uses scintillators optically coupled to photomultiplier tubes. This method is far more efficient and less noisy than using a photodiode array. the resulting improvement in signal/noise allows equivalent images to be made at much lower doses and with lower beam energies than in fan-beam systems. (Ex. 1 at 67-68)
The described embodiments of the invention are intended to be merely exemplary and numerous variations and modifications will be apparent to those skilled in the art. All such variations and modifications are intended to be within the scope of the present invention as defined in the appended claims. (Col. 10, lines 20-25)	