UNITED STATES DISTRICT COURT

EASTERN DISTRICT OF LOUISIANA

ALFORD SAFETY SERVICES, INC. *Plaintiff*	*	Civil Action No.:_____
	*	Section: _____
v.	*	
	*	Magistrate: _____
HOT-HED, INC., HOT-HED SALES & SERVICE, INC. AND SAFEZONE SAFETY SYSTEMS, LLC *Defendants*	*	

COMPLAINT

NOW INTO COURT comes Plaintiff, Alford Safety Services, Inc. (hereinafter "ASSI"), through undersigned counsel, who respectfully represents to the Court the following:

NATURE OF THE CASE

1. This is an action for patent infringement arising under the patent laws of the United States, 35 U.S.C. §§ 1 *et seq.*

2. The Court has original subject matter jurisdiction over such claims pursuant to 28 U.S.C. §§ 1331 & 1338(a).

THE PARTIES

3. Plaintiff, ASSI, is a Louisiana corporation with it principal place of business located at 207-209 Clendenning Rd., Houma, Louisiana 70363.

4. Defendant Hot-Hed, Inc. is a Texas corporation with its principal place of business located at 5322 HH Addicks-Satsuma Road, Houston, Texas 77084.

5. Defendant Hot-Hed Sales & Service, Inc. ("HHSS") is a Texas corporation with its principal place of business located 5322 HH Addicks-Satsuma Road, Houston, Texas 77084. Hot-Hed, Inc. and HHSS are hereinafter referred to collectively as "Hot-Hed".

6. Defendant Safezone Safety Systems, L.L.C. ("Safezone") is a Louisiana limited liability company with its principle place of business located at 215 Venture Blvd., Houma, Louisiana 70360.

JURISDICTION & VENUE

7. This Court has personal jurisdiction over the parties, and venue is proper in this judicial district pursuant to: 28 U.S.C. §§ 1391(b) and (c) and/or 1400(b).

PLAINTIFF AND ITS RIGHTS

8. ASSI has provided oil-field and off-shore services, both in the Gulf of Mexico and world-wide, since at least 1997. ASSI has developed and marketed its own habitat for welding in hazardous conditions, branded HAZTEC, since at least 2002. ASSI's HAZTEC system is the subject of U.S. Patent Nos. 7,091,848 ("the '848 Patent"); 7,193,501 ("the '501 Patent"); 7,518,484 ("the '484 Patent"); and 6,783,054 ("the '054 Patent") (collectively, the "Alford Patents") (copies of these four patents are attached hereto as Exhibits A, B, C and D, respectively).

9. The '054 Patent issued from U.S. Patent Application No. 10/155,716, filed on May 20, 2002. Reexamination of the '054 Patent was requested in 2006, resulting in the issuance of a Reexamination Certificate on June 30, 2009. A true and correct copy of the '054

Patent, including the above referenced Reexamination Certificate, is appended to this Complaint as Exhibit D..

10. ASSI is the owner, by assignment, of all rights, title and interests in and to each of the Alford Patents, including the right to redress all past and present infringements of the patent. The Alford Patents are all in full force and effect and all fees necessary for such have been paid.

11. The subject matter of the Alford Patents relates generally to a system for conducting welding and other "hot work" in areas adjacent to flammable materials.

HOT-HED'S UNLAWFUL ACTS

12. On information and belief, in 2010 Hot-Hed was contracted by British Petroleum to provide a welding habitat that infringes one or more claims of the Alford Patents, for use on the Thunder Horse facility in the Gulf of Mexico.

13. On information and belief, Hot-Hed is currently offering to provide a welding habitat that infringes one or more claims of the Alford Patents for use on multiple platforms in the Gulf of Mexico.

14. On information and belief, Hot-Hed is making, using, selling, offering to sell, and/or importing into the United States, a welding habitat which infringes one or more claims of the Alford Patents.

15. On information and belief, Hot-Hed has engaged in the inducement of, and/or contribution to, the making, using, selling, offering to sell, and/or importing into the United States, by others of a welding habitat which infringes one or more claims of the Alford Patents.

SAFEZONE'S UNLAWFUL ACTS

16. On information and belief, Safezone has provided, and is currently providing, a welding habitat that infringes one or more claims of the Alford Patents for use on platforms operated by Anadarko Petroleum Corp.

17. On information and belief, Safezone is currently offering to provide a welding habitat that infringes one or more claims of the Alford Patents for use on multiple platforms in the Gulf of Mexico.

18. On information and belief, Safezone is making, using, selling, offering to sell, and/or importing into the United States, a welding habitat which infringes one or more claims of the Alford Patents.

COUNT ONE: HOT-HED'S PATENT INFRINGMENT

19. ASSI realleges and incorporates by reference the allegations set forth in Paragraphs 1 through 18 above as if fully set forth herein.

20. On information and belief, in the United States and in this Judicial District, Hot-Hed has been, and is, infringing – directly, contributorily, and/or by inducement – one or more of the claims of the Alford Patents by making, using, selling, offering to sell, and/or importing into the United States, a welding habitat for use in the Gulf of Mexico which infringes one or more claims of the Alford Patents.

21. Hot-Hed's infringing system directly competes with ASSI's HAZTEC system. By infringing – directly, contributorily, and by inducement – one or more claims of the Alford Patents, Hot-Hed has unfairly reaped a substantial commercial and competitive advantage and savings in research, development, costs, and marketability, all to ASSI's detriment.

22. ASSI has been, and will continue to be, damaged by such direct, contributory, and induced infringement in an amount to be proven at trial and in a manner and amount that cannot

be fully measured or compensated in economic terms and for which there is no adequate remedy at law. The actions of Hot-Hed have damaged, and will continue to damage, ASSI's business, market, reputation and goodwill. Such irreparable damage will continue unless the acts of Hot-Hed are enjoined during the pendency of this action and thereafter. ASSI is, therefore, entitled to the remedies provided by 35 U.S.C. §§ 283-285.

COUNT TWO: SAFEZONE'S PATENT INFRINGMENT

23. ASSI realleges and incorporates by reference the allegations set forth in Paragraphs 1 through 18 above as if fully set forth herein.

24. On information and belief, in the United States and in this Judicial District, Safezone has been, and is, infringing – directly, contributorily, and/or by inducement – one or more of the claims of the Alford Patents by making, using, selling, offering to sell, and/or importing into the United States, a welding habitat for use in the Gulf of Mexico which infringes one or more claims of the Alford Patents.

25. Safezone's infringing system directly competes with ASSI's HAZTEC system. By infringing – directly, contributorily, and by inducement – one or more claims of the Alford Patents, Safezone has unfairly reaped a substantial commercial and competitive advantage and savings in research, development, costs, and marketability, all to ASSI's detriment.

26. Safezone's activities with respect to the infringing welding habitat constitute willful infringement of one or more claims of the Alford Patents.

27. ASSI has been, and will continue to be, damaged by such direct, contributory, and induced infringement in an amount to be proven at trial and in a manner and amount that cannot be fully measured or compensated in economic terms and for which there is no adequate remedy at law. The actions of Safezone have damaged, and will continue to damage, ASSI's business,

market, reputation and goodwill. Such irreparable damage will continue unless the acts of Safezone are enjoined during the pendency of this action and thereafter. ASSI is, therefore, entitled to the remedies provided by 35 U.S.C. §§ 283-285.

PRAYER FOR RELIEF

WHEREFORE, ASSI prays for judgment that:

A. Hot-Hed, Safezone and their respective officers, agents, servants, employees, attorneys and all other persons in active concert or participation with any of them, be enjoined and restrained during the pendency of this action and permanently thereafter from infringing any claims of the Alford Patents.

B. Hot-Hed and Safezone be ordered to pay ASSI such damages as ASSI has sustained and adequate to compensate for the patent infringement, including ASSI's lost profits, but in no event less than a reasonable royalty, as provided by 35 U.S.C. § 284.

C. The infringement of the Alford Patents by Safezone be found to have been willfully committed by Defendants and that the damages be increased to three times the amount assessed, as provided by 35 U.S.C. § 284.

D. Hot-Hed and Safezone be ordered to pay ASSI the cots of this action and its reasonable attorneys' fees, and interest, as provided by 35 U.S.C. §§ 284 and 285.

E. Hot-Hed and Safezone be ordered to pay ASSI prejudgment interest on all sums awarded.

F. ASSI have such other and further relief as this Court may deem just and proper.

JURY DEMAND

ASSI demands a trial by jury as to all issues so triable.

Respectfully submitted,

/s/ Ian C. Barras

RAYMOND G. AREAUX (#16792) T.A.
IAN C. BARRAS (#30854)
J. MATTHEW MILLER III (#32594)
Carver, Darden, Koretzky, Tessier,
Finn, Blossman & Areaux, LLC
1100 Poydras Street, Suite 3100
New Orleans, Louisiana 70163
Telephone: (504) 585-3803
Facsimile: (504) 585-3801
E-mail: areaux@carverdarden.com
Attorneys for Alford Safety Services, Inc., Plaintiff

4830-4718-6694, v. 1

US007091848B2

(12) **United States Patent**
Albarado

(10) **Patent No.: US 7,091,848 B2**
(45) **Date of Patent: *Aug. 15, 2006**

(54) **ENCLOSURE SYSTEM FOR HOT WORK WITHIN THE VICINITY OF FLAMMABLE OR COMBUSTIBLE MATERIAL**

(75) Inventor: **Jason P. Albarado**, Houma, LA (US)

(73) Assignee: **Alford Safety Services, Inc.**, Houma, LA (US)

(*) Notice: Subject to any disclaimer, the term of this patent is extended or adjusted under 35 U.S.C. 154(b) by 0 days.

This patent is subject to a terminal disclaimer.

(21) Appl. No.: **11/011,848**

(22) Filed: **Dec. 14, 2004**

(65) **Prior Publication Data**

US 2005/0151661 A1 Jul. 14, 2005

Related U.S. Application Data

(63) Continuation-in-part of application No. 10/388,271, filed on Mar. 13, 2003, now abandoned.

(51) **Int. Cl.**
G08B 29/00 (2006.01)

(52) **U.S. Cl.** **340/506**; 340/3.1; 340/626; 340/632; 340/679; 340/691.6; 700/1

(58) **Field of Classification Search** ..... None
See application file for complete search history.

(56) **References Cited**

U.S. PATENT DOCUMENTS

3,626,836	A *	12/1971	Schneidler	454/339
4,297,940	A *	11/1981	Hainline	454/49
4,298,955	A *	11/1981	Munday et al.	700/266
4,721,947	A *	1/1988	Brown	340/540
4,767,913	A *	8/1988	Weber et al.	219/130.21
4,866,594	A *	9/1989	David et al.	700/9
5,018,321	A	5/1991	Wardlaw, III	
5,101,604	A *	4/1992	Wardlaw, III	52/2.17
5,565,852	A	10/1996	Peltier et al.	
5,755,884	A	5/1998	Buckler et al.	
6,060,689	A *	5/2000	Wilson	219/137.41
6,130,412	A *	10/2000	Sizemore	219/481
6,182,497	B1 *	2/2001	Krajci	73/23.2
6,540,603	B1 *	4/2003	Koskinen	454/58
6,583,386	B1 *	6/2003	Ivkovich	219/130.01
6,783,054	B1 *	8/2004	Pregeant et al.	228/102
2004/0122353	A1	6/2004	Shahmirian et al.	

(Continued)

FOREIGN PATENT DOCUMENTS

GB	2311847 A	8/1997
GB	2382593 A	4/2003

(Continued)

OTHER PUBLICATIONS

Welding Hot Work Habitats SPE Health, Safety and Environment in Oil and Gas Exploration and Production Conference, Jan. 25-27, Jakarta, Indonesia; Author: Browning, I.G.

* cited by examiner

Primary Examiner—Benjamin C. Lee
Assistant Examiner—Son Tang
(74) *Attorney, Agent, or Firm*—Henry E. Naylor; Kean, Miller, Hawthorne, D'Armond, McCowan & Jarman, LLP

(57) **ABSTRACT**

One or more enclosures constructed about one or more objects at which hot work is to be performed at a facility containing flammable and/or combustible material. Hot work includes such things as welding, torch cutting, grinding and the like that produces heat, spark, slag or flame. The one or more enclosures are capable of being simultaneously and independently controlled and monitored by a single control and monitoring system.

44 Claims, 2 Drawing Sheets

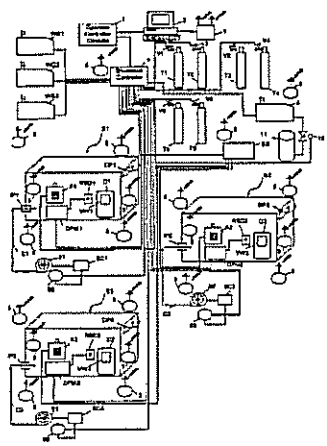

EXHIBIT
A

Figure 1

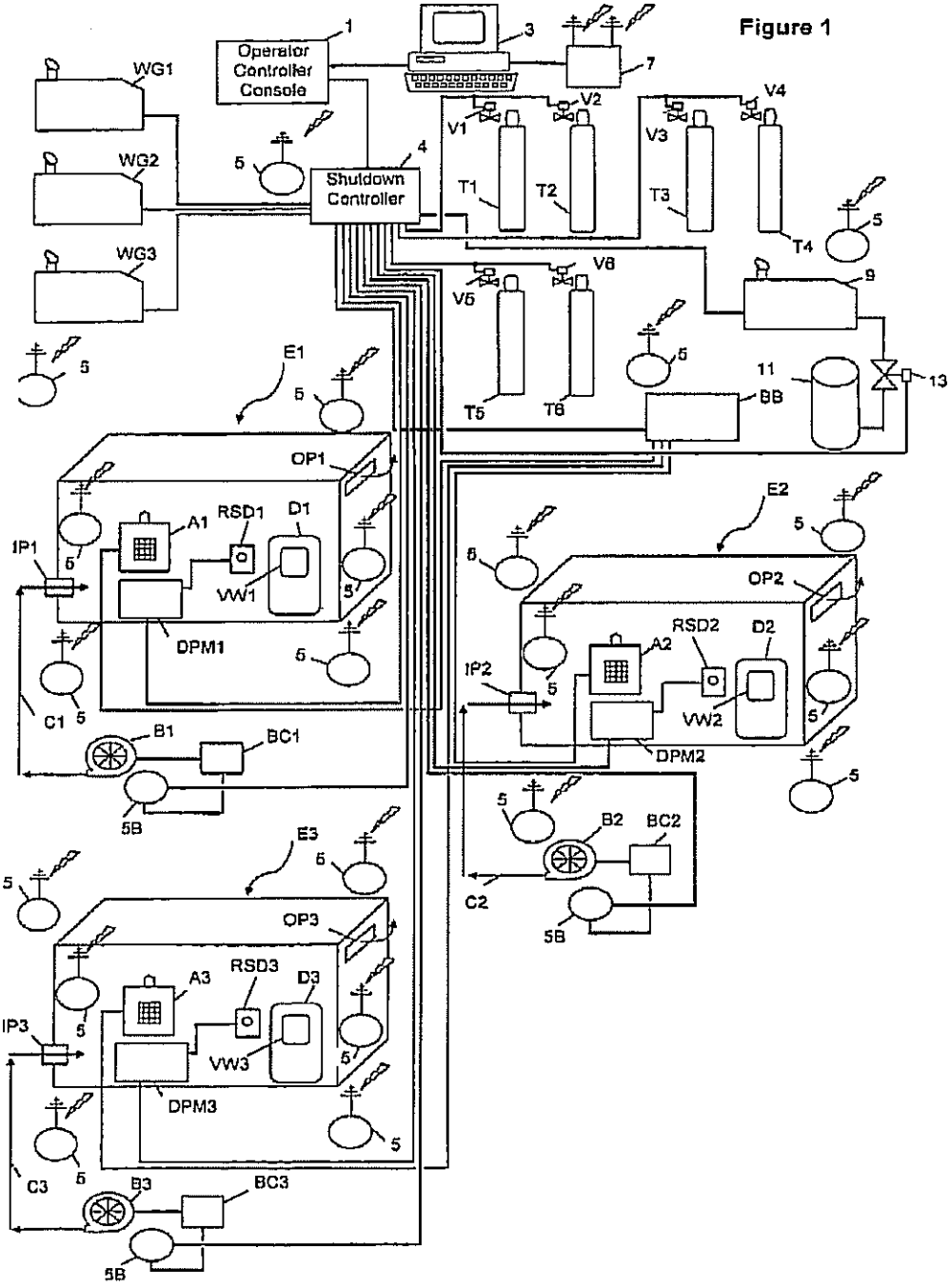
Operator Controller Console
Shutdown Controller
WG1
WG2
WG3
V1
V2
V3
V4
V5
V6
T1
T2
T3
T4
T5
T6
BB
OP1
OP2
OP3
A1
A2
A3
RSD1
RSD2
RSD3
D1
D2
D3
VW1
VW2
VW3
DPM1
DPM2
DPM3
IP1
IP2
IP3
C1
C2
C3
B1
B2
B3
BC1
BC2
BC3
E1
E2
E3
5B

Figure 2

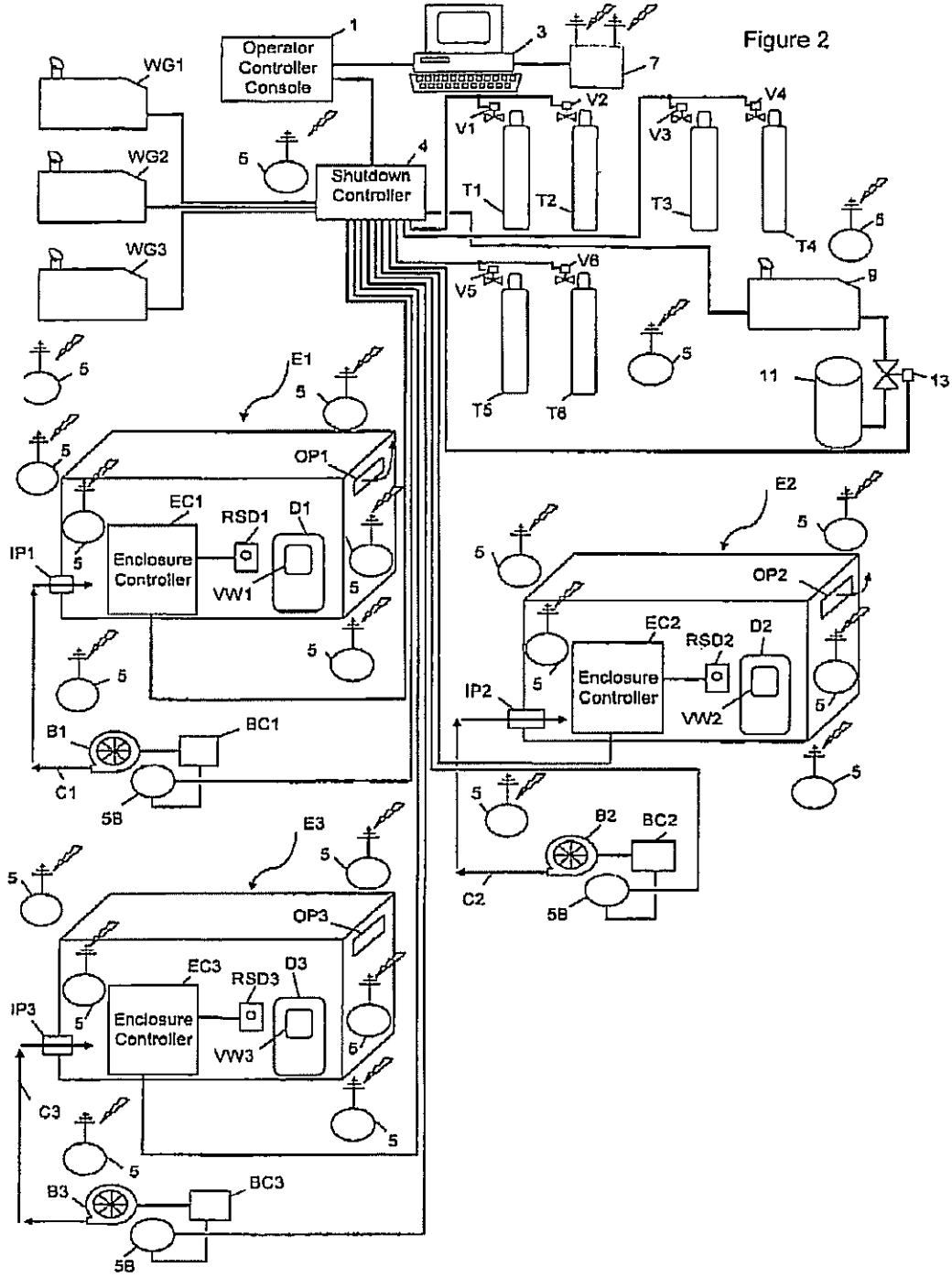
Operator Controller Console
1
3
7
WG1
WG2
WG3
Shutdown Controller
4
5
V1
V2
V3
V4
T1
T2
T3
T4
V5
V6
T5
T6
8
11
13
E1
OP1
EC1
RSD1
D1
IP1
Enclosure Controller
VW1
B1
BC1
C1
5B
E2
OP2
EC2
RSD2
D2
IP2
VW2
B2
BC2
C2
E3
OP3
EC3
RSD3
D3
IP3
VW3
C3
B3
BC3

ENCLOSURE SYSTEM FOR HOT WORK WITHIN THE VICINITY OF FLAMMABLE OR COMBUSTIBLE MATERIAL

CROSS-REFERENCE TO RELATED APPLICATIONS

This application is a continuation-in-part of U.S. Ser. No. 10/388,271 filed Mar. 13, 2003 now abandoned.

FIELD OF THE INVENTION

The present invention relates to one or more enclosures constructed around one or more objects at which hot work is to be performed at a facility containing flammable and/or combustible material. Hot work includes such things as welding, torch cutting, grinding and the like that produces heat, spark, slag or flame. The one or more enclosures are capable of being simultaneously and independently controlled and monitored by a single monitoring and control system.

BACKGROUND OF THE INVENTION

Hot work, such as welding, at facilities where flammable and combustible materials are present is extremely dangerous and is regulated by the appropriate governmental agency depending on the facility. In the case of offshore platforms, hot work is regulated by the Mineral Management Service (MMS); in the case of a pipeline, pumping stations and associated facilities, hot work is regulated by the Department of Transportation (DOT); and in the case of refineries and chemical plants, hot work is regulated by the Occupational Safety and Health Administration (OSHA). Regulations stipulate that hot work cannot be preformed in or on any of said facilities within 35 feet from the point of impact where slag, sparks or other burning substances can fall onto or in the vicinity of a storage area of a container holding flammable or combustible materials. Also, hot work cannot be preformed within 10 feet of a pressurized pipe or vessel containing flammable or combustible material in or on any of said facilities.

In some cases, the hot work operation can be setup in a safe area and items to be hot worked can be brought to this safe area, hot worked, then returned to their original location. In most cases it is not practical, from a strategic or from an economic point of view, to setup a remote hot work location a distance away from the object to be hot worked. In the past, a facility such as a petroleum production platform, would have to be shut down during hot work operation. Further, a section of pipe or vessel in a petroleum refinery or chemical plant would have to be purged and cleaned of flammable and combustible material before any hot work could be performed within 10 feet of it. This created a substantial financial burden for the operator of the platform, refinery or plant.

A welding habitat was developed within the last few years wherein a temporary building is built around an object to be welded. The habitat, also referred to as an enclosure, is equipped with gas monitors that will automatically signal a shutdown of all welding equipment when a predetermined concentration level of flammable or combustible gas is reached. For example, U.S. Pat. No. 6,783,054 to Pregeant Jr. et al. teaches and claims a system for conducting welding adjacent flammable materials on an offshore platform. The system contains an enclosed chamber having a blower and sensors, each of which monitors a single gas, typically a combustible gas, and the ability to automatically shutdown the welding operation if a predetermined unacceptable concentration of a combustible gas is detected at one or more sensors.

Co-pending application U.S. Ser. No. 10/388,271; filed Mar. 13, 2003, which is incorporated herein by reference, teaches a welding habitat and monitoring system wherein there is wireless communication between gas detection monitors and a CPU monitored by an operator.

While the industry is starting to see habitat and monitoring systems that enable hot work to be preformed in areas here-to-fore not allowed unless at least a portion of the facility was shutdown, there is still a need in the art for improved hot work enclosures and monitoring and control systems that lead to a more economical and safe hot work operation.

SUMMARY OF THE INVENTION

In accordance with the present invention, there is provided an enclosure system comprised of one or more enclosures built about at least one object to be hot worked at a facility wherein flammable or combustible materials are located within a hazardous distance from where the hot work is to be conducted, which enclosure system is comprised of:

a) at least one enclosure, each enclosure comprising: i) enclosing walls, ceiling and floor defining an enclosed chamber in which the hot work is to be conducted; ii) at least one door to allow workers to enter and exit; iii) at least one viewing window; iv) at least one air inlet port; v) at least one air outlet port; vi) a blower in fluid communication with said at least one air inlet port; vii) a blower control in communication with said blower and to a gas detection monitor located at the intake of said blower, wherein the blower control will allow the blower to continue to operate in the event of a shutdown that is not triggered by the gas detection monitor at the intake of the blower; viii) a differential pressure monitor for monitoring the pressure within the enclosure relative to the pressure outside of the enclosure; ix) at least one manual emergency shutdown switch inside of said enclosure; and x) at least one manual emergency shutdown switch outside of, but within the immediate perimeter of, said enclosure;

b) a monitoring system comprised of:

i) a plurality of gas detection monitors located at predetermined locations: a) inside and outside of each enclosure; b) in the vicinity of hot work equipment; and c) in the vicinity of the intake of said blower; each of said gas detection monitors having a means of communicating with a gas detection controller console; and

ii) a gas detection controller console comprised of: a) a means capable of receiving data transmitted from the plurality of gas detection monitors; b) an interface means capable of communicating data from said means of receiving data to the central processing unit (CPU); c) a central processing unit (CPU) containing software capable of, inter alia, accepting, storing, computing, and displaying data received from said plurality of gas detection monitors, d) a display device in communication with said central processing unit and capable of displaying data from said plurality of gas detection monitors; and e) an interface means capable of communicating a signal from the central processing unit to a control system;

c) a control system comprised of:

i) an operator controller console comprised of; a) a source of electrical power for the enclosure system; b) at least one

control device; c) a means for displaying the status of each enclosure; d) the capability of communicating predetermined by-pass and system shutdown signals to a shut down controller; and e) an audible alarm that will activate when a shutdown occurs; and

ii) a shutdown controller capable of sending shutdown signals to one or more enclosure control devices, and one or more shutdown control devices and to various equipment associated with the hot work to be conducted in said one or more enclosures.

In a preferred embodiment, said at least one enclosure also comprises one or more of the following: a) an audible alarm, b) a visual alarm, c) emergency lights, d) backup batteries, e) a power control and f) a temperature monitoring device.

In another preferred embodiment the hot work is selected from welding, cutting, and grinding.

In another preferred embodiment, the facility is a petroleum drilling platform, a petroleum production platform, a jack-up rig, a pumping station, a tank farm, a petroleum refinery, a chemical plant, an ocean going tanker, or a section of a pipeline.

In yet another preferred embodiment the operator controller console also has the capability to bypass a differential pressure monitor at each of the enclosures.

BRIEF DESCRIPTION OF THE FIGURES

FIG. 1 hereof is a schematic representation of one preferred embodiment of the present invention showing three enclosures, for hot work, that can be simultaneously and independently monitored and controlled.

FIG. 2 hereof is a schematic representation of another preferred embodiment of the present invention also showing three enclosures that can be simultaneously and independently monitored and controlled. This schematic shows an audible/visual alarm, DPM, and backup battery system as an integral unit for each enclosure.

DETAILED DESCRIPTION OF THE INVENTION

The present invention can be utilized for any type of hot work and at any type of facility where flammable and/or combustible materials present a safety issue during hot work operations. The term "hot work", as used herein, means any work operation that can result in a fire or explosion in the presence of combustible or flammable materials. Non-limiting examples of the types of hot work that can be conducted in the enclosures of the present invention include all types of welding, such as gas welding, electric arc welding and cutting, including gas tungsten arch welding (GTAW), gas shielding metal arch welding (GMAW), friction welding, laser welding; cutting such as with a torch or plasma cutter and cutting, brazing, soldering, and grinding with electric and pneumatic tools. Also included is working in electric panels while they are still energized at a location of said facility considered to be classified, in reference to the presence of flammable or combustible materials, by facility area classification drawings.

The present invention can be practiced at any type of facility where hot work is to be done in the vicinity of flammable or combustible material. Non-limiting examples of facilities where the instant invention can be practiced include petroleum drilling and production platforms, including jack-up rigs; pumping stations; petroleum refineries; chemical plants; tank farms where flammable or combustible materials are stored; and tankers and pipelines used for transporting flammable or combustible materials. As previously mentioned, governmental regulations are strict with respect to performing hot work at such facilities. In the past, at least a portion of such a facility would have to be shutdown prior to performing any hot work operation.

Practice of the present invention allows for safe and efficient hot work to be performed in the vicinity of flammable and combustible materials. At least one enclosure, also sometimes referred to herein as a habitat, is built about the object or objects to be hot worked. The enclosure is of temporary construction comprised of enclosing walls, ceiling extending between the walls and floor extending between the walls, thereby defining an enclosed chamber. It can take any shape depending on the object or objects to be hot worked and the particular site limitations at which it is to be built. Any material suitable for constructing such an enclosure can be used. Non-limiting examples of suitable construction materials include metals, ceramics, wood, and composite materials such as fiberglass and carbon fiber reinforced polymeric materials. Fire retardant wood is preferred, more preferably plywood, for the combination of safety, cost, and convenience purposes. Scaffolding, if needed, will be provided to support at least a portion of each enclosure, particularly if the enclosure needs to be positioned lateral to a production or drilling platform. The enclosure will be large enough to allow a predetermined number of workers to comfortably work inside the enclosure with all necessary tools, hot work equipment and monitoring and safety devices. At least two workers will typically be in a single enclosure. If only two workers are provided, one worker will be one performing the hot work operation and the other worker will typically be on fire watch for observing the hot work. Workers inside of the enclosure will have the capability of verbally communicating with the operator and other workers outside of the enclosure by use of conventional means, preferably by two-way wireless radio.

Each enclosure will contain at least one door that preferably opens to the outside of the enclosure. The door will be one that can be easily opened from both the inside and outside of the enclosure and built in a break-away fashion in case of an emergency. At least one shatterproof viewing window will be present on either the door or on one or more walls for observing activity within the enclosure. Shatterproof windows are well known in the art and are typically manufactured as laminated glass with an inner layer of transparent plastic material. All plastic viewing windows can also be used for the instant enclosures. The floor of each enclosure will preferably be lined with a suitable material capable of withstanding temperatures up to about, 3000° F., preferably up to about 3,500° F. Such a floor will preferably be comprised of a bottom layer of fire resistant plywood covered with a refractory cloth material. The cloth material, which will typically be supplied in rolls of ⅛ inch to ¼ inch thickness is of the type marketed by Thermostatic Industries Inc. of Huntington, Calif. under the tradename Panther Felt. Such a material is comprised of a refractory fiber, such as fiberglass or a ceramic fiber such as aluminosilicate or aluminoborosilicate. On top of the cloth layer will preferably be a relatively thin malleable layer sheet metal material, preferably a stainless steel, to safely contain slag or sparks generated from the hot work operation. The floor will also preferably contain side plates (not shown) around the periphery of the floor to help contain sparks and slag. The side plates will typically be several inches to about a foot off the floor.

Each enclosure will also contain at least one inlet port to allow a suitable amount of air to be conducted into the enclosure by use of a blower, preferably an electrically operated blower. At least one air outlet port will also be provided. It is preferred that each air outlet port contain a spark resistant grill or filter to substantially reduce the potential of sparks being carried from inside the enclosure to outside where flammable or combustible materials may be present. Another preferred way of minimizing the risk of sparks and slag from exiting the enclosure at a high temperature is to provide a metal ventilation duct system (not shown) of sufficient length leading to the spark resistant grill so that any sparks or slag entering the ventilation system in the enclosure will cool to a safe temperature by the time they exit the grill into the atmosphere.

Each enclosure, while in use, will be under a positive pressure to provide fresh air to workers inside the enclosure and to prevent gases from outside the enclosure from entering the enclosure. The pressure of each enclosure is monitored by a suitable differential pressure monitor (DPM). The present invention provides for the monitoring and control of multiple enclosures by a single operator using a single wireless gas detection monitoring system and a single control system wherein multiple enclosures can be individually or all can be simultaneously shutdown, or certain equipment can be selectively by-passed if one or more predetermined events occur.

It will be understood that each enclosure will also have a conventional explosion proof lighting system (not shown) supported by a backup battery system (BB) so that lighting inside each enclosure will continue to function during an emergency shutdown. A conduit sealing system will also be used to seal any spaces around cables, hoses and pipes entering an enclosure from the outside.

The present invention will be better understood with reference to the figures hereof. FIG. **1** is a simplified schematic of one preferred embodiment of the present invention showing three enclosure systems wherein welding is the hot work to be performed. All three enclosures are managed by a single operator using a single monitoring system, preferably a single wireless gas detection monitoring system, and a single control system. FIG. **1** shows three enclosures, E1, E2, and E3, each having at least one door D1, D2, and D3, at least one air intake port IP1, IP2, and IP3, and at least one air outlet port OP1, OP2, and OP3. It is preferred that the door open outward and that it be a break-away door. That is a door contructed in such a way that in the event of an emergency a single worker could exert enough force so that the door breaks away from its support means and provides the worker with a means of escape. At least one shatterproof viewing window VW1, VW2, and VW3 will also be provided for each enclosure for observing workers inside the enclosure. The three enclosures are also in communication with appropriate hot work equipment, such as welding machines and generators WG1, WG2, and WG3 and associated gas tanks T1–T6. The gas tanks will typically contain welding gases such as oxygen and acetylene. Each tank is equipped with, respectively, a shutdown valve V1 to V6, which is activated in case of an emergency shutdown by receiving a shutdown signal from shutdown controller **4**. Valves V1 to V6 will preferably be conventional solenoid valves readily available in the art. Further, each enclosure is provided with at least one remote manual emergency shutdown switch RSD1, RSD2, and RSD3. There is also a manual shutdown switch integrated in at least one of the enclosure controls (not shown) and also for the operator monitoring the operator controller console. It is preferred that the emergency shutdown switches be hard wired and not wireless.

It is within the scope of this invention that pneumatic tools be used in one or more of the enclosures. Such tools will require an air compressor **9** and associated equipment for running the pneumatic tools, such as volume tank **11** and blow-down valve **13**. Blow-down valve **13** provides for the sudden bleeding of compressed air from the compressed air system in case of an emergency to prevent damage to such things as compressor seals. It also serves to immediately stop the operation of pneumatic tools in case of an emergency shutdown. The system of the present invention will also be provided with at least one back-up battery BB in case of a power failure at the facility at which hot work is being performed.

There is also a blower, B1, B2, and B3 associated with the inlet ports of each enclosure for providing fresh air to the workers inside the enclosure, as well as for providing a positive pressure differential inside the enclosure. Although the blowers could be operated electrically or by use of compressed air, it is preferred that the blowers be electric blowers. Air is provided from the blowers to the inlet ports via any suitable hose or ducting C1, C2, and C3. It will be understood that the temperature inside of each enclosure can be controlled to some degree by providing either cool air or heated air to the blower intake. Cooled or heated air can be provided by any suitable conventional means, such as by use of a conventional heat exchange unit at the intake of the blower. It is preferred that each blower have associated therewith its own independent control device BC1, BC2, and BC3 in communication with said shutdown controller, but which can be by-passed by the operator at the operator controller console. That is, if the emergency shutdown is not triggered by the gas detection monitors 5B1, 5B2, and 5B3 located at the intake of the blowers then the blowers can be made to continue to operate for the safety of the workers inside the enclosure.

Each enclosure will also preferably have it's own independently operated audible alarm and light assembly A1, A2, and A3. The audible alarm can be a horn used to warn personnel inside the enclosure in the event of a system shutdown for that enclosure. The light is preferably a strobe light that is also used to warn personnel in the enclosure in the event of an emergency shutdown.

Each enclosure contains a differential pressure monitor DPM1, DPM2, and DPM3 that monitors the difference in pressure within the enclosures compared to the pressure outside the enclosures. One type of differential pressure monitor that can be used in the practice of the present invention is the Explosion Proof Differential Pressure Switch, such as Model 1950, supplied by Dwyer Instruments, Inc., of Michigan City, Ind. The interior of the enclosure is at a higher pressure than the pressure outside of the enclosure to prevent flammable or combustible gases from entering the enclosure from the outside during hot work operation. If the pressure inside the enclosure drops to substantially the pressure outside of the enclosure a signal is sent to the shutdown controller which sends the appropriate shutdown signal to all welding equipment, including tank valves, welding machines, etc. There will be times when workers will need to enter or exit the enclosure during normal and safe working conditions and unless the DPMs can be by-passed an emergency shutdown will result if the pressure in the enclosure drops to a level that will be substantially equal to the pressure outside the enclosure. Thus, a worker wishing to enter or exit an enclosure would

communicate with the operator, who would deactivate the DPM for that enclosure until the worker has safely entered or exited the enclosure, upon which it is reactivated.

The three enclosures E1, E2, and E3 can all simultaneously and independently be monitored and controlled by an operator monitoring the operator controller console 1, which is the central control center for all three enclosures. It will be understood that three enclosures are shown in the Figures hereof for illustrative purposes only. The present invention can be practiced for only one enclosure or for any number of enclosures, and all will be independently and simultaneously monitored and controlled. Of course, practical considerations, such as construction time, number of workers required, and space limitations will dictate the maximum number of enclosures that can be built and simultaneously operated at any given facility. The operator controller console 1 will contain a suitable power supply (not shown), at least one control device, a means for monitoring the status of any one or more enclosure, a manual emergency shutdown switch that is capable of shutting down any one or more of the enclosures simultaneously, a threshold indicator indicating if the upper and or lower threshold has been reached for any given gas detection variable, an appropriate audible and visual alarm system, and a differential pressure monitor (DPM) by-pass switch for each of the enclosures. The power supply will preferably be a conventional AC to DC power converter. Non-limiting examples of control devices include electrical relays, solenoids, switches, fuses and circuit breakers.

The operator controller console 1 is integrally connected to a monitoring system. The monitoring system can be any suitable system that will allow communication between the components of the system, preferably the gas detection controller console and the portable gas detection monitors. The monitoring system is comprised of a gas detection controller console 3, which preferably contains a suitable radio modem transceiver, a central processing unit (CPU), a display device and a plurality of interface cards. Interface cards are well known in the art and are typically a circuit board with the appropriate components to allow communication across boundaries, such as between hardware, or between software and hardware. Interface cards also allow communication between different software languages and codes that an application needs to communicate with each other and with hardware. It is to be understood that the entire gas detection monitoring system could be hardwired, although a wireless system is preferred. The display device is preferably part of a portable computer, more preferably a laptop computer. The gas detection controller console 3 will be in communication with a plurality of gas detection monitors 5, which will be strategically placed within and about the enclosures as well as in the vicinity of hot work equipment, blowers and any other of the various equipment associated with the present enclosure system. It is preferred that at least two gas detection monitors be located inside at least one, more preferably inside of all enclosures. It is also within the scope of the present invention to place gas monitors a distance away, preferably at least 10 feet away from the enclosure, in such a pattern that substantially 100% of the perimeter of the enclosure is monitored by gas detection monitors. A remote antenna box 7 is typically used for receiving signals (radio frequency) from the plurality of gas detection monitors and carrying them to the gas detection controller console 3, in the event that it is being used in the interior of a building. It is within the scope of the present invention that the software for the gas detection system be suitable for labeling the plurality of gas detection monitors as to their physical location and being viewable via the display device. This will allow the operator to know immediately what monitor is sending a distress signal which will allow the operator to take immediate appropriate measures at the precise location of distress. For example, if the distress signal is not coming from a gas detection monitor located in the vicinity of the blower intake, the operator can over ride the blower shutdown function so that the blower continues to conduct fresh air into the enclosure.

As previously mentioned, each gas detection monitor is in communication with the gas detection controller console 3. The gas detection monitors are preferably portable and wireless making them capable of being carried or worn by workers. Each monitor will be programmed to measure one or more non-limiting variables, such as temperature, combustible gases including those represented in the lower explosive limit (LEL), oxygen, carbon monoxide, and hydrogen sulfide. Although single point gas detection monitors can be employed, it is preferred that multi-point monitors be used. That is, a single point monitor is capable of monitoring the concentration level of only one gas, whereas a multi-point monitor is capable of simultaneously monitoring the concentration of more than one gas and as a part of a wireless system, simultaneously communicating information to the transceiver of the gas detection controller console 3, which in turn transmits the signal through a suitable interface means, preferably an interface card, that will translate the data into a protocol suitable for software in an associated CPU to read, analyze, display, store, and respond thereto. It is preferred that one or more of the gas detection monitors also have the capability of two-way voice communication with the operator of the controller console. The gas detection controller console 3 interfaces with the operator controller console 1 by any suitable means, such as also by use of a suitable interface card. The operator controller console will have the capabilities as previously mentioned, such as showing the status of each enclosure etc. The CPU of the gas detection controller console will also be capable of sending shutdown instructions to the operator controller console 1, which in turn sends the signal to the shutdown controller box 4, which signals the targeted equipment to shutdown. The ability of an operator to be able to monitor, on a display device, the predetermined variables, such as gas levels, etc. allows the operator to take the proper preemptive action prior to the level of emergency being reached. As previously mentioned, the operator controller console will display the status of each enclosure, preferably by the use of lights. That is, one light display can represent a safe situation and a different light display for an unsafe, or emergency shutdown situation.

An upper concentration level for each gas is programmed into the CPU software and if this level is reached, the system will automatically shutdown all targeted hot work equipment at all enclosures via communication with a shutdown controller 4. The shutdown controller 4 is in communication with all systems, devices and equipment of the overall system. For example, upon receiving an emergency shutdown signal from the operator controller console 1 via the gas detection controller console 3, a shutdown signal is sent to valves V1–V6 shutting down all gas delivery to the welding equipment. A shutdown signal is also sent to the blower control boxes BC1, BC2, and BC3 as well as to blowdown valve 13 and welding equipment WG1, WG2, and WG3. As previously mentioned, it is within the scope of this invention that blowers B1, B2, and B3 can continue to be operated, if it is determined that the emergency was not caused by the presence of combustible or flammable gas at

the intake of the blowers. It is also within the scope of this invention that a function be provided that will shutdown all enclosures in the case of a facility shutdown. That is, if a production platform, refinery or other facility has a general emergency shutdown, all hot work will automatically be shutdown as part of the facility shutdown. Solid lines (without arrow heads) between components of the system represent electrical hardwiring EW between components of the system in both FIG. 1 and in FIG. 2. All hardwiring is not labeled since it will be evident from the Figures where hardwiring occurs.

FIG. 2 hereof represents another preferred embodiment of the present invention where the audible and visual alarm warning system is combined with the differential pressure monitor and backup batteries into a single unit, referred to herein as the enclosure controllers EC1, EC2, and EC3. All of FIG. 2 components that are common to FIG. 1 have the same numbers as those of FIG. 1 hereof.

What is claimed is:

1. An enclosure system comprised of one or more enclosures built about at least one object to be hot worked at a facility wherein flammable or combustible materials are located within a hazardous distance from where the hot work is to be conducted, which enclosure system is comprised of:

a) at least one enclosure, each enclosure comprising: i) enclosing walls, ceiling and floor defining a chamber in which the hot work is to be conducted; ii) at least one door to allow workers to enter and exit; iii) at least one air inlet port; iv) at least one air outlet port; v) a blower having an intake and an exhaust, which exhaust is in fluid communication with said at least one air inlet port; vi) a blower control in communication with said blower and to a gas detection monitor located at the intake of said blower and to a shutdown controller, wherein the blower control has the capability of allowing the blower to continue to operate during an emergency shutdown that is not triggered by combustible or flammable gas detected at the gas detection monitor at the intake of the blower; vii) a differential pressure monitor for monitoring the pressure within the enclosure relative to the pressure outside of the enclosure; viii) at least one manual emergency shutdown switch inside of said enclosure; and ix)at least one manual emergency shutdown switch outside of, but within the perimeter of, said enclosure;

b) a monitoring system comprised of:

i) a plurality of gas detection monitors located at predetermined locations inside and outside of each enclosure; wherein each of said gas detection monitors having a means of communicating with a gas detection controller console; and

ii) a gas detection controller console comprised of: a) a means capable of receiving data transmitted from the plurality of gas detection monitors; b) an interface means capable of communicating data from said means to a central processing unit; c) the central processing unit containing software capable of accepting, storing, computing, and displaying data received from said plurality of gas detection monitors, d) a display device in communication with said central processing unit and capable of displaying data from said plurality of gas detection monitors; and e) an interface means capable of communicating a signal from the central processing unit to a control system;

c) the control system comprised of:

i) an operator controller console comprised of; a) a source of electrical power for the enclosure system; b) at least one control device; c) a means for displaying the status of each enclosure; d) the capability of communicating predetermined by-pass and system shutdown signals to a shut down controller; e) a by-pass function that has the capability of overriding a shutdown signal triggered by the differential pressure monitor in any one or more of said enclosures to allow workers to enter and exit said one or more enclosures without triggering a shutdown; and f) an audible alarm that will activate when a shutdown occurs; and

ii) the shutdown controller capable of sending shutdown signals to one or more enclosure control devices, and one or more shutdown control devices and to various equipment associated with the hot work to be conducted in said one or more enclosures.

2. The enclosure system of claim 1 wherein the walls, floor, door and ceiling of the enclosure are composed of fire retardant wood.

3. The enclosure system of claim 2 wherein the floor of said enclosure is further covered with a layer of fire proof refractory cloth material on top of which is a layer of sheet metal.

4. The enclosure system of claim 1 wherein the door of each enclosure opens outward.

5. The enclosure system of claim 1 wherein each enclosure is provided with an explosion proof interior lighting system.

6. The enclosure system of claim 1 wherein the outlet port of at least one enclosure is provided with a spark resistant filter.

7. The enclosure system of claim 1 wherein the hot work to be performed is welding.

8. The enclosure system of claim 1 wherein the blower of each enclosure is an electrically operated blower.

9. The enclosure system of claim 1 wherein at least two gas detection monitors is located in each enclosure.

10. The enclosure system of claim 1 wherein the various equipment associated with the hot work is selected from a) welding machines, b) generators, c) air compressors, and d) tanks for holding gases for a hot work operation.

11. The enclosure system of claim 1 wherein the source of electrical power is an AC to DC power converter.

12. The enclosure system of claim 1 which is located at a facility selected from a drilling platform a production platform, a jack-up rig, a pumping station, a petroleum refinery, a chemical plant, a tank farm, an ocean going tanker, and a section of pipeline.

13. The enclosure system of claim 1 wherein there are at least two enclosures.

14. The enclosure system of claim 1 wherein the operator controller console contains a bypass function that can override a shutdown signal to one or more blowers.

15. The enclosure system of claim 1 wherein each enclosure is provided with at least one additional item selected from the group consisting of: a) an audible alarm, b) a visual alarm, c) emergency lights, d) backup batteries and e) a power control, and f) a temperature monitoring device.

16. The enclosure system of claim 1 wherein each enclosure is also provided with an integral unit containing an audible alarm, a visual alarm, a differential pressure monitor, and backup batteries.

17. The apparatus of claim 1 wherein the enclosure has a viewing window.

18. An enclosure system comprised of one or more enclosures built about at least one object to be hot worked at a facility wherein flammable or combustible materials are located within a hazardous distance from where the hot work

is to be conducted, which facility is selected from a drilling platform, a production platform, a jack-up rig, a pumping station, a petroleum refinery, a chemical plant a tank farm, an ocean going tanker, and a section of pipeline, which enclosure system is comprised of:

a) at least one enclosure, each enclosure comprising: i) enclosing walls, ceiling and floor defining a chamber in which the hot work is to be conducted; ii) at least one door that opens outward to allow workers to enter and exit; iii) at least one shatterproof viewing window; iv) at least one air inlet port; v) at least one air outlet port containing a spark resistant filter; vi) an electrically operated blower located outside of said at least one enclosure and having an intake and an exhaust which exhaust is in fluid communication with said at least one air inlet port vii) a blower control in communication with said blower and to a shutdown controller, and to a gas detection monitor located at the intake of said blower, wherein the blower control has the capability of allowing the blower to continue to operate during an emergency shutdown that is not triggered by combustible or flammable gas detected at the gas detection monitor at the intake of the blower; viii) a differential pressure monitor for monitoring the pressure within the enclosure relative to the pressure outside of the enclosure; ix) at least one manual emergency shutdown switch inside of said enclosure; and x) at least one manual emergency shutdown switch outside of said enclosure, but within the perimeter of, said enclosure;

b) a wireless monitoring system comprised of:

i) a plurality of wireless gas detection monitors located at predetermined locations: a) at least 10 feet away and encompassing the outside of each enclosure; b) at least two wireless gas detection monitors inside of each enclosure; c) in the vicinity; of hot work equipment and d) at the intake of said blower; each of said gas detection monitors being in wireless communication with a gas detection controller console; and

ii) a gas detection controller console comprised of: a) a transceiver capable of receiving wireless data transmitted from said plurality of gas detection monitors; b) an interface card capable of communicating data from said transceiver to a central processing unit; c) a central processing unit containing; software capable of accepting, storing, computing, and displaying data received from said plurality of gas detection monitors, d) a display device in communication with said central processing unit and capable of displaying data from said plurality of gas detection monitors; and e) an interface card capable of communicating a signal from the central processing unit to a control system;

c) a control system comprised of:

i) an operator controller console comprised of; a) a source of electrical power for the enclosure system; b) at least one control device; c) a means for displaying the status of each enclosure; d) the capability of communicating predetermined by-pass and system shutdown signals to a shut-down controller; e) a by-pass function that has the capability of overriding a shutdown signal triggered by the differential pressure monitor in any one or more of said enclosures to allow workers to enter and exit said one or more enclosures without triggering a shutdown; and f) an audible alarm that will activate when a shutdown occurs; and

ii) the shutdown controller capable of sending shutdown signals to one or more enclosure control devices, and one or more shutdown control devices and to various equipment associated with the hot work to be conducted in said one or more enclosures.

19. The enclosure system of claim **18** wherein the walls, floor, door and ceiling of the enclosure are composed of fire retardant wood.

20. The enclosure system of claim **19** wherein the floor is constructed of a bottom layer of fire retardant plywood on top of which is a refractory cloth material on top of which is a surface layer of sheet metal.

21. The enclosure system of claim **18** wherein each enclosure is provided with an explosion proof interior lighting system.

22. The enclosure system of claim **18** wherein the hot work to be performed is welding.

23. The enclosure system of claim **18** wherein the various equipment associated with the hot work is selected from a) welding machines, b) generators, c) air compressors, and d) tanks for holding gases for a hot work operation.

24. The enclosure system of claim **18** wherein the source of electrical power is an AC to DC power converter.

25. The enclosure system of claim **18** which is located at a facility selected from a drilling platform, a production platform, a jack-up rig, a pumping station, a petroleum refinery, a chemical plant, a tank farm, an ocean going tanker, and a section of pipeline.

26. The enclosure system of claim **18** wherein there are at least two enclosures.

27. The enclosure system of claim **18** wherein each enclosure is provided with at least one additional item selected from the group consisting of: a) an audible alarm, b) a visual alarm, c) emergency lights, d) backup batteries and e) a power control box, and f) a temperature monitoring device.

28. The enclosure system of claim **18** wherein each enclosure is also provided with an integral unit containing an audible alarm, a visual alarm, a differential pressure monitor, and backup batteries.

29. A method for isolating the area about an item to be hot worked at a facility containing combustible or flammable material, which method comprises:

a) building an enclosure big enough about the item to be hot worked so that at least two workers can occupy it and conduct a hot work operation, which enclosure comprising: i) enclosing walls, ceiling and floor defining an enclosed chamber in which the hot work is to be conducted; ii) at least one door to allow workers to enter and exit; iii) at least one viewing window; iv) at least one air inlet port; v) at least one air outlet port; vi) a blower having an intake and an exhaust which exhaust is in fluid communication with said at least one air inlet port; vii) a blower control in communication with said blower and to a shutdown controller and to a gas detection monitor located at the intake of said blower, wherein the blower control has the capability of allowing the blower to continue to operate during an emergency shutdown that is not triggered by combustible or flammable gas detected at the gas detection monitor at the intake of the blower; viii) a differential pressure monitor for monitoring the pressure within the enclosure relative to the pressure outside of the enclosure; ix) at least one manual emergency shutdown switch inside of said enclosure; and x) at least one manual emergency shutdown switch outside of said enclosure, but within the immediate perimeter of, said enclosure;

b) providing the enclosure with a monitoring system comprised of:

i) a plurality of gas detection monitors located at predetermined locations: a) inside and outside of each enclosure; b) in the vicinity of hot work equipment; and c) in the vicinity of the intake of said blower; each of said gas detection monitors having a transceiver in wireless communication with a gas detection controller console; and

ii) a gas detection controller console comprised of: a) a transceiver capable of receiving wireless data transmitted from the plurality of gas detection monitors; b) an interface card capable of communicating data from said transceiver to a central processing unit c) the central processing unit containing software capable of accepting, storing, computing, and displaying data received from said plurality of gas detection monitors, d) a display device in communication with said central processing unit and capable of displaying data from said plurality of gas detection monitors; and e) an interface card capable of communicating a signal from the central processing unit to a control system;

c) further providing said enclosure with a control system comprised of:

i) an operator controller console comprised of; a) an electrical power source for the enclosure system; b) at least one control device; c) a means for displaying the status of each enclosure; d) the capability of communicating predetermined by-pass and system shutdown signals to a shut down controller; e) a bypass function that has the capability of overriding a shutdown signal triggered by the differential pressure monitor in any one or more of said enclosures to allow workers to enter and exit said one or more enclosures without triggering a shutdown; and f) an audible alarm that will activate when a shutdown occurs; and

ii) the shutdown controller capable of sending shutdown signals to one or more enclosure control devices, and one or more shutdown control devices, and to various equipment associated with the hot work to be conducted in said one or more enclosures.

30. The method of claim **29**, wherein the walls, floor, door and ceiling of the enclosure are composed of fire retardant wood.

31. The method of claim **30** wherein the floor of said enclosure is further covered with a layer fire proof refractory cloth material on top of which is a layer of sheet metal.

32. The method of claim **29** wherein the door of each enclosure opens outward.

33. The method of claim **29** wherein each enclosure is provided with an explosion proof interior lighting system.

34. The method of claim **29** wherein the outlet port of at least one enclosure is provided with a spark resistant filter.

35. The method of claim **29** wherein the hot work to be performed is welding.

36. The method of claim **29** wherein the blower of each enclosure is an electrically operated blower.

37. The method of claim **29** wherein at least two gas detection monitors is located in each enclosure.

38. The method of claim **29** wherein the various equipment associated with the hot work is selected from a) welding machines, b) generators, c) air compressors, and d) tanks for holding gases for a hot work operation.

39. The method of claim **29** wherein the source of electrical power is an AC to DC power converter.

40. The method of claim **29** which is located at a facility selected from a drilling platform, a production platform, a jack-up rig, a pumping station, a petroleum refinery, a chemical plant, a tank farm, an ocean going tanker, and a section of pipeline.

41. The method of claim **29** wherein there are at least two enclosures.

42. The method of claim **29** wherein the operator controller console contains a bypass function that can override a shutdown signal to one or more blowers.

43. The method of claim **29** wherein each enclosure is provided with at least one additional item selected from the group consisting of: a) an audible alarm, b) a visual alarm, c) emergency lights, d) backup batteries and e) a power control, and f) a temperature monitoring device.

44. The method of claim **29** wherein each enclosure is also provided with an integral unit containing an audible alarm, a visual alarm, a differential pressure monitor, and backup batteries.

* * * * *



UNITED STATES PATENT AND TRADEMARK OFFICE

UNITED STATES DEPARTMENT OF COMMERCE
United States Patent and Trademark Office
Address: COMMISSIONER FOR PATENTS
P.O. Box 1450
Alexandria, Virginia 22313-1450
www.uspto.gov

APPLICATION NO.	FILING DATE	FIRST NAMED INVENTOR	ATTORNEY DOCKET NO.	CONFIRMATION NO.
11/011,848	12/14/2004	Jason P. Albarado	16102-12	8432

7590 02/08/2007

Henry E. Naylor, of Kean, Miller,
Hawthorne, D'Armond, McCowan & Jarman, LLP
P.O. Box 3513
Baton Rouge, LA 70821-3513

EXAMINER	
TANG, SON M	
ART UNIT	**PAPER NUMBER**
2612	

MAIL DATE	DELIVERY MODE
02/08/2007	PAPER

Please find below and/or attached an Office communication concerning this application or proceeding.

PD

UNITED STATES PATENT AND TRADEMARK OFFICE

Commissioner for Patents
United States Patent and Trademark Office
P.O. Box 1450
Alexandria, VA 22313-1450
www.uspto.gov

In re Patent No. 7,091,848
Name of Patentee: Jason P. Albarado
Issue Date: August 15, 2006
Appl No.: 11/011,848
Filed: December 14, 2004
For: Enclosure System For Hot Work Within the Vicinity of Flammable or Combustible Materials

DECISION GRANTING PETITION
37 CFR 1.324

This is a decision on the petition filed November 26, 2006 to correct inventorship under 37 CFR 1.324.

The petition is granted.

The patented file is being forwarded to Certificate of Corrections Branch for issuance of a certificate naming only the actual inventor or inventors.

Daniel Wu
Supervisory Patent Examiner
Art Unit 2612
Technology Center 2600

Henry E. Naylor, of Kean, Miller,
Hawthorne, D'Armond, McCowan & Jarman, LLP
P.O. Box 3513
Baton Rouge, LA 70821-3513

UNITED STATES PATENT AND TRADEMARK OFFICE

Commissioner for Patents
United States Patent and Trademark Office
P.O. Box 1450
Alexandria, VA 22313-1450
www.uspto.gov

DATE: February 5, 2007
TO: Certificates of Correction Branch
FROM: Daniel Wu
SPE, Art Unit 2612
SUBJECT: REQUEST FOR CERTIFICATE OF CORRECTION

Please issue a Certificate of Correction in U. S. Letters Patent No. 7,091,848 as specified on the attached Certificate.

Daniel Wu, SPE/
Art Unit 2612

UNITED STATES PATENT AND TRADEMARK OFFICE

CERTIFICATE

Patent No. 7,091,848
Patented: August 15, 2006

On petition requesting issuance of a certificate for correction of inventorship pursuant to 35 U.S.C. 256, it has been found that the above identified patent, through error and without deceptive intent, improperly sets forth the inventorship. Accordingly, it is hereby certified that the correct inventorship of this patent is:

(75) Inventors: Jason P. Albarado, Houma, LA (US) and Todd J. Hutchinson, Houma, LA (US)

Daniel Wu
Supervisory Patent Examiner
Art Unit 2612

PTO/SB/44 (04-05)
Approved for use through 04/30/2007. OMB 0651-0033
U.S. Patent and Trademark Office; U.S. DEPARTMENT OF COMMERCE
Under the Paperwork Reduction Act of 1995, no persons are required to respond to a collection of information unless it displays a valid OMB control number.
(Also Form PTO-1050)

UNITED STATES PATENT AND TRADEMARK OFFICE
CERTIFICATE OF CORRECTION

PATENT NO. : 7,091,848

APPLICATION NO.: 11/011,848

ISSUE DATE : August 15, 2006

INVENTOR(S) : Jason P. Albarado & Todd J. Hutchinson

It is certified that an error appears or errors appear in the above-identified patent and that said Letters Patent is hereby corrected as shown below:

(75) Inventors: Jason P. Albarado, Houma, LA (US) and Todd J. Hutchinson, Houma, LA (US)

MAILING ADDRESS OF SENDER (Please do not use customer number below):

Henry E. Naylor, Registration No. 27,461, Kean, Miller, Hawthorne, D'Armond, McCowan, Jarman, L.L.P., P.O. Box 3513, Baton Rouge, LA 70821

This collection of information is required by 37 CFR 1.322, 1.323, and 1.324. The information is required to obtain or retain a benefit by the public which is to file (and by the USPTO to process) an application. Confidentiality is governed by 35 U.S.C. 122 and 37 CFR 1.14. This collection is estimated to take 1.0 hour to complete, including gathering, preparing, and submitting the completed application form to the USPTO. Time will vary depending upon the individual case. Any comments on the amount of time you require to complete this form and/or suggestions for reducing this burden, should be sent to the Chief Information Officer, U.S. Patent and Trademark Office, U.S. Department of Commerce, P.O. Box 1450, Alexandria, VA 22313-1450. DO NOT SEND FEES OR COMPLETED FORMS TO THIS ADDRESS. SEND TO: Attention Certificate of Corrections Branch, Commissioner for Patents, P.O. Box 1450, Alexandria, VA 22313-1450.

If you need assistance in completing the form, call 1-800-PTO-9199 and select option 2.

US007193501B1

(12) **United States Patent**
Albarado et al.

(10) **Patent No.: US 7,193,501 B1**
(45) **Date of Patent: *Mar. 20, 2007**

(54) **ENCLOSURE SYSTEM ALLOWING FOR HOT WORK WITHIN THE VICINITY OF FLAMMABLE AND COMBUSTIBLE MATERIAL**

(75) Inventors: **Jason P. Albarado**, Houma, LA (US); **Todd J. Hutchinson**, Houma, LA (US)

(73) Assignee: **Alford Safety Services, Inc.**, Houma, LA (US)

(*) Notice: Subject to any disclaimer, the term of this patent is extended or adjusted under 35 U.S.C. 154(b) by 0 days.

This patent is subject to a terminal disclaimer.

(21) Appl. No.: **11/176,495**

(22) Filed: **Jul. 7, 2005**

Related U.S. Application Data

(63) Continuation-in-part of application No. 11/011,848, filed on Dec. 14, 2004, which is a continuation-in-part of application No. 10/388,271, filed on Mar. 13, 2003, now abandoned.

(51) **Int. Cl.**
G05B 23/02 (2006.01)

(52) **U.S. Cl.** **340/3.1**; 340/506; 340/626; 340/679; 340/691.6

(58) **Field of Classification Search** ..... None
See application file for complete search history.

(56) **References Cited**

U.S. PATENT DOCUMENTS

3,626,836	A *	12/1971	Schneidler	454/339
4,297,940	A *	11/1981	Hainline	454/49
4,298,955	A	11/1981	Munday et al.	
5,018,321	A	5/1991	Wardlaw, III	
5,101,604	A *	4/1992	Wardlaw, III	52/2.17
5,565,852	A	10/1996	Peltier et al.	
5,755,884	A *	5/1998	Buckler et al.	118/317
5,854,994	A *	12/1998	Canada et al.	702/56
6,060,689	A *	5/2000	Wilson	219/137.41
6,130,412	A *	10/2000	Sizemore	219/481
6,540,603	B1 *	4/2003	Koskinen	454/58
6,583,386	B1 *	6/2003	Ivkovich	219/130.01
6,687,005	B2 *	2/2004	Kim	356/437
6,783,054	B1 *	8/2004	Pregeant et al.	228/102
2004/0122353	A1	6/2004	Shahmirian et al.	

FOREIGN PATENT DOCUMENTS

GB	2311847 A	10/1997
GB	2382593 A	6/2003

OTHER PUBLICATIONS

Welding Hot Work Habitats SPE Health, Safety and Environment in Oil and Gas Exploration and Production Conference, Jan. 25-27, Jakarta, Indonesia; Author: Browning, I.G.

* cited by examiner

Primary Examiner—Benjamin C. Lee
Assistant Examiner—Son Tang
(74) *Attorney, Agent, or Firm*—Henry E. Naylor; Kean, Miller, Hawthorne, D'Armond, McCowan & Jarman, LLP

(57) **ABSTRACT**

An enclosure constructed around an area at which hot work is to be performed at a facility containing flammable or combustible material. Hot work includes such things as welding, torch cutting, grinding and the like. Facilities include petroleum drilling and production platforms, oil tankers, petroleum and chemical plants, and petroleum tank farms. Gas detection monitoring apparatuses are used with the enclosure which will automatically simultaneously shut-down one or more enclosures.

40 Claims, 5 Drawing Sheets

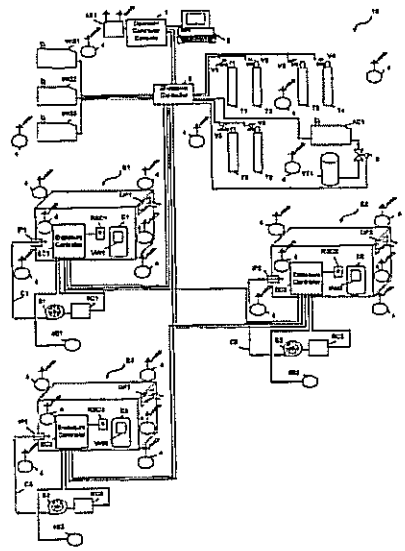

EXHIBIT
3

Figure 1

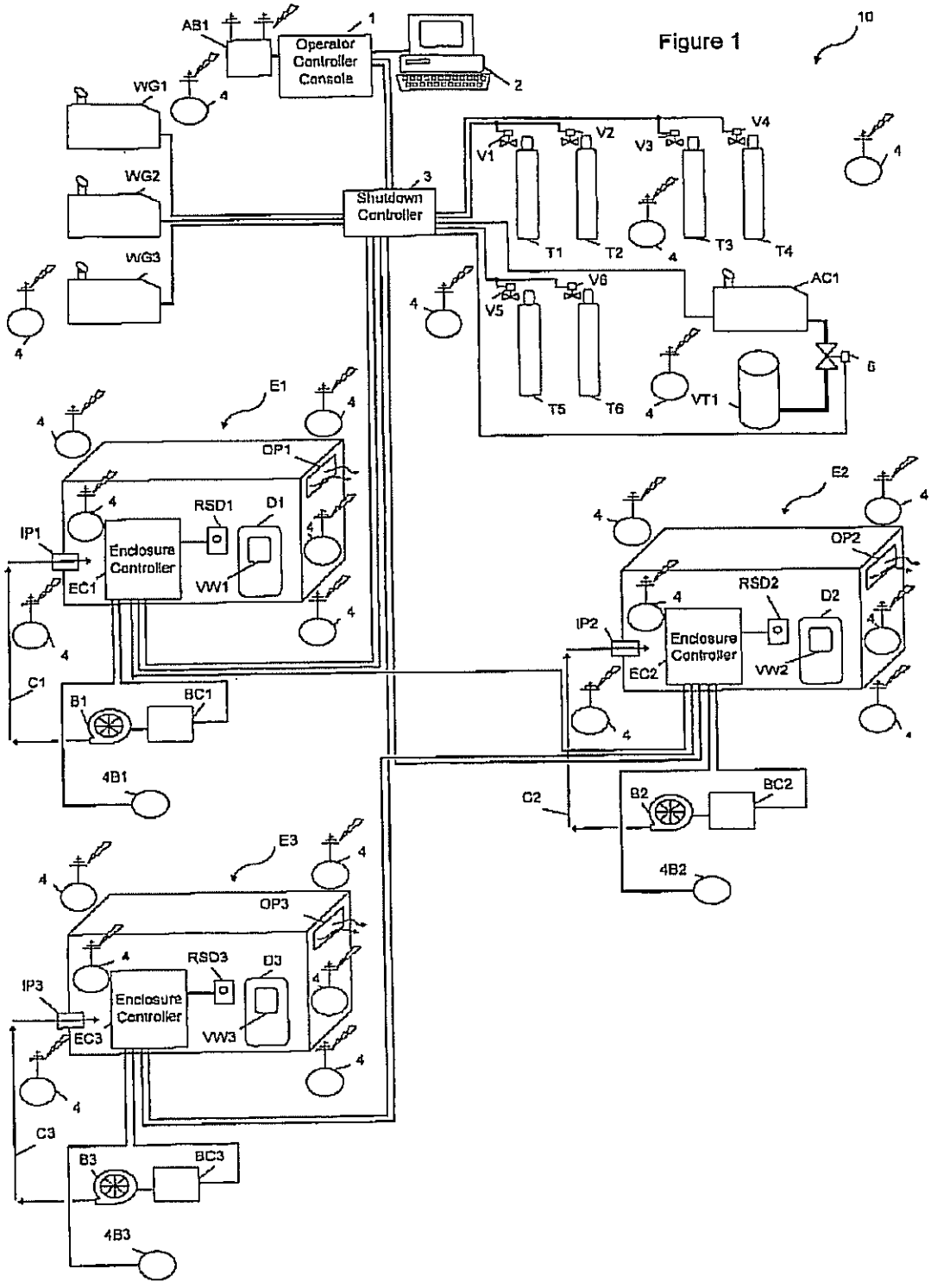
10
AB1
1
Operator Controller Console
2
WG1
WG2
WG3
4
3
Shutdown Controller
V1
V2
V3
V4
T1
T2
T3
T4
V5
V6
T5
T6
AC1
VT1
6
E1
OP1
RSD1
D1
IP1
Enclosure Controller
EC1
VW1
C1
B1
BC1
4B1
E2
OP2
RSD2
D2
IP2
EC2
VW2
C2
B2
BC2
4B2
E3
OP3
RSD3
D3
IP3
EC3
VW3
C3
B3
BC3
4B3

Figure 2

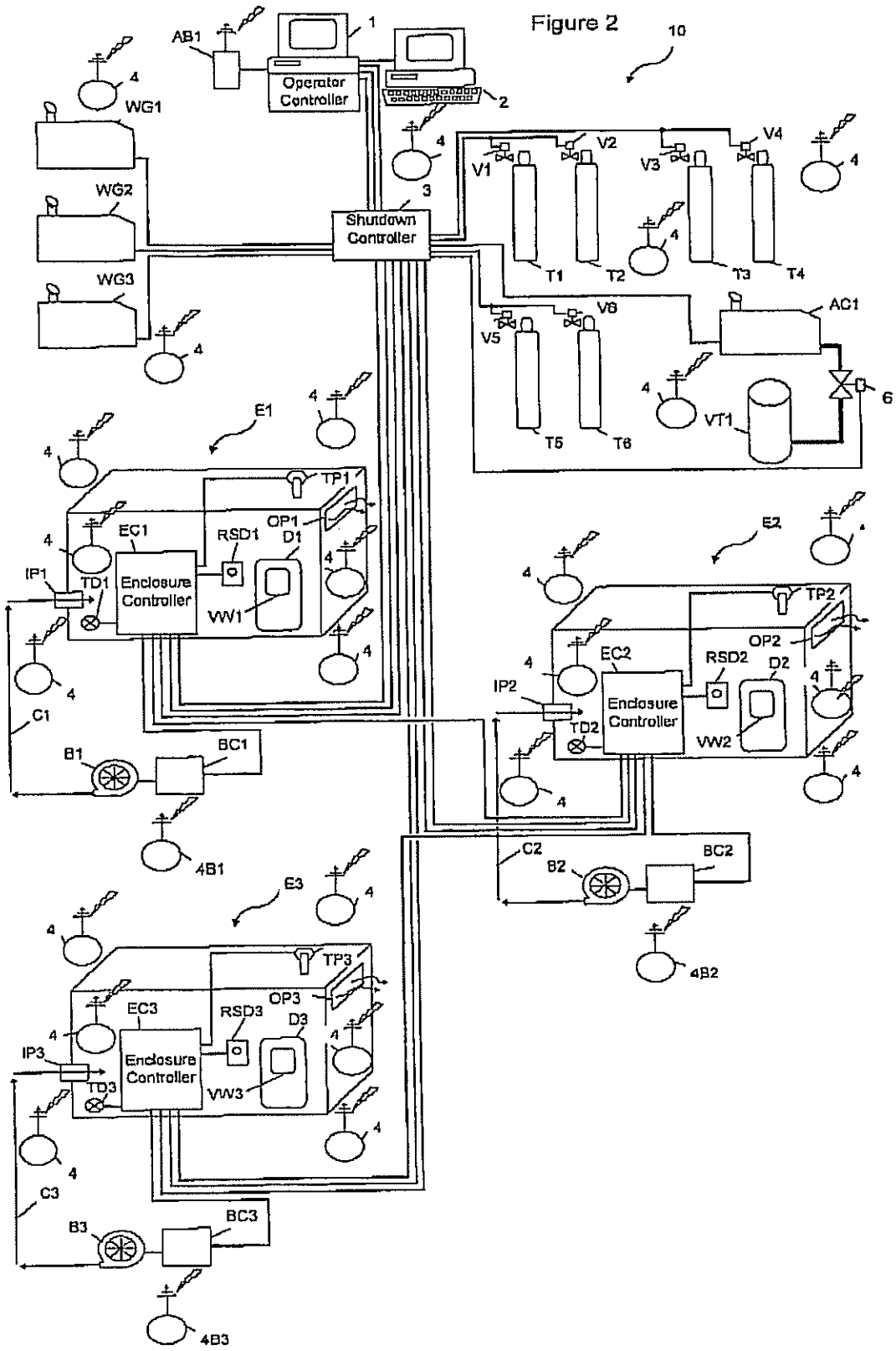
10
AB1
1
Operator Controller
2
WG1
WG2
WG3
3
Shutdown Controller
V1
V2
V3
V4
T1
T2
T3
T4
V5
V6
T5
T6
AC1
VT1
6
E1
TP1
EC1
RSD1
OP1
D1
IP1
TD1
Enclosure Controller
VW1
C1
B1
BC1
4B1
E2
TP2
EC2
RSD2
OP2
D2
IP2
TD2
Enclosure Controller
VW2
C2
B2
BC2
4B2
E3
TP3
EC3
RSD3
OP3
D3
IP3
TD3
Enclosure Controller
VW3
C3
B3
BC3
4B3
4

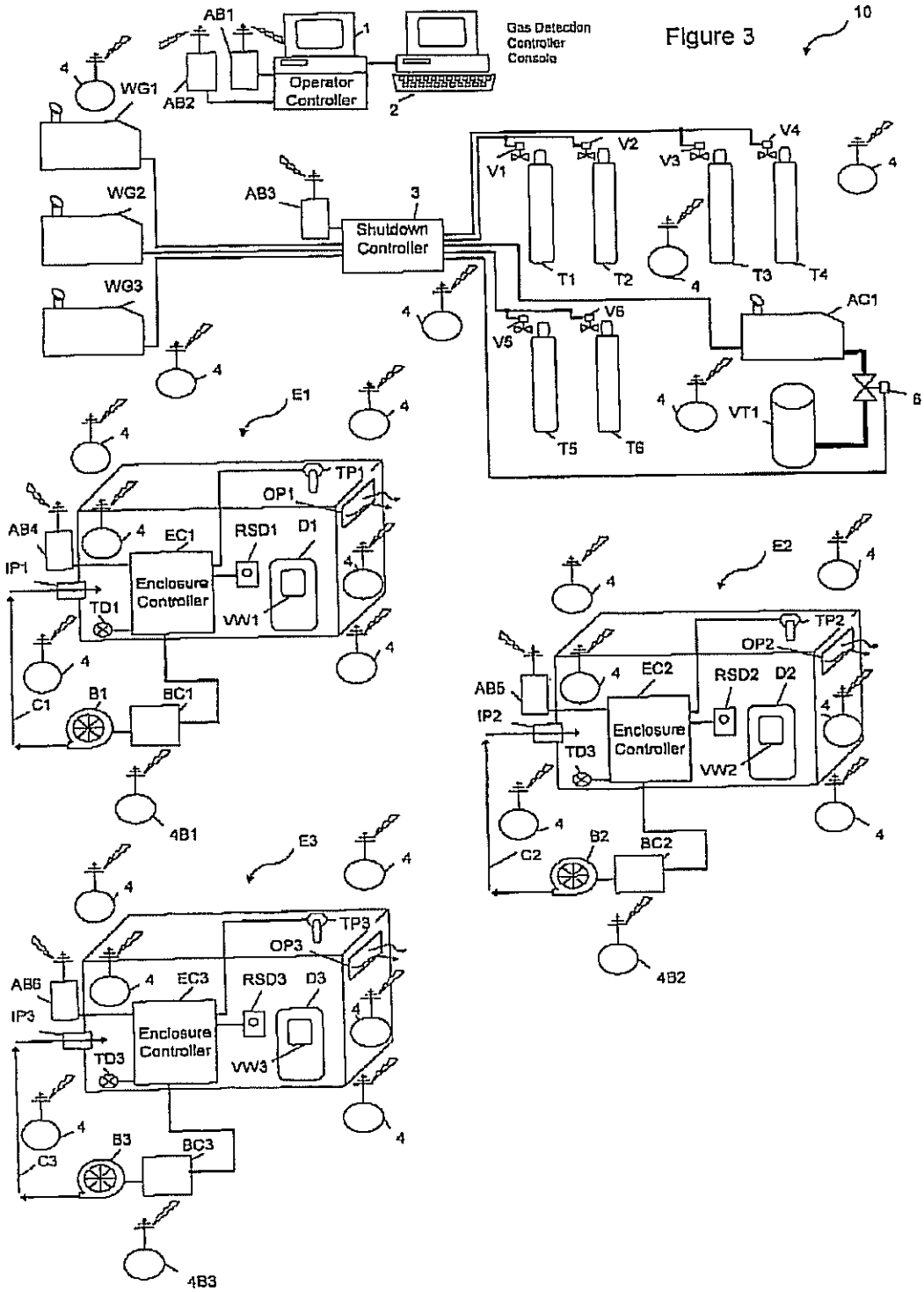
Figure 3
10
Gas Detection Controller Console
Operator Controller
Shutdown Controller
Enclosure Controller
AB1
AB2
AB3
AB4
AB5
AB6
WG1
WG2
WG3
V1
V2
V3
V4
V5
V6
T1
T2
T3
T4
T5
T6
AC1
VT1
E1
E2
E3
TP1
TP2
TP3
OP1
OP2
OP3
EC1
EC2
EC3
RSD1
RSD2
RSD3
D1
D2
D3
IP1
IP2
IP3
TD1
TD3
VW1
VW2
VW3
B1
B2
B3
BC1
BC2
BC3
C1
C2
C3
4B1
4B2
4B3

Figure 4

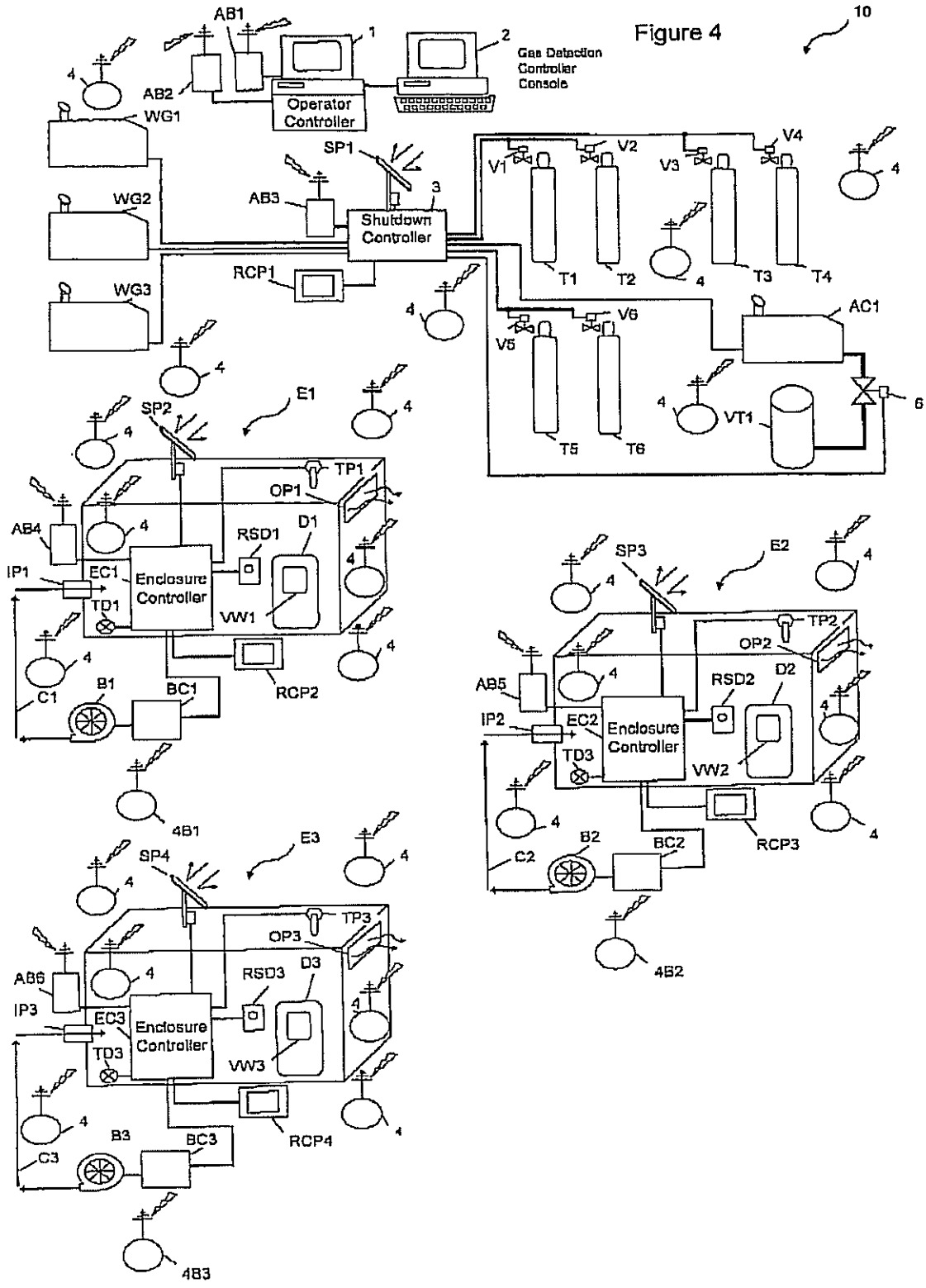
10
AB1
1
2
Gas Detection Controller Console
Operator Controller
AB2
WG1
WG2
WG3
SP1
AB3
3
Shutdown Controller
RCP1
V1
V2
V3
V4
T1
T2
T3
T4
V5
V6
T5
T6
AC1
VT1
6
E1
SP2
TP1
OP1
AB4
RSD1
D1
IP1
EC1
Enclosure Controller
TD1
VW1
RCP2
C1
B1
BC1
4B1
SP3
E2
TP2
OP2
AB5
RSD2
D2
IP2
EC2
Enclosure Controller
TD2
VW2
RCP3
C2
B2
BC2
4B2
SP4
E3
TP3
OP3
AB6
RSD3
D3
IP3
EC3
Enclosure Controller
TD3
VW3
RCP4
C3
B3
BC3
4B3
4

Figure 5

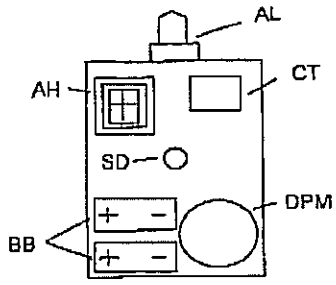

Figure 6

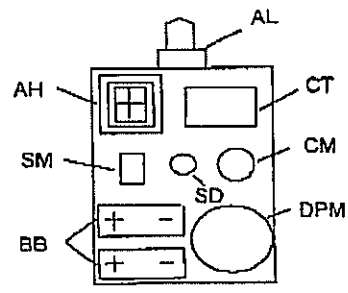

Figure 7

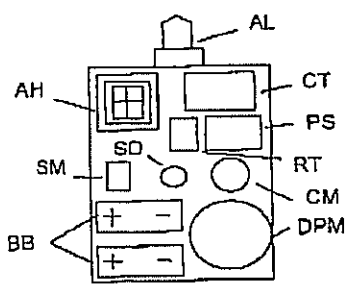

Figure 8

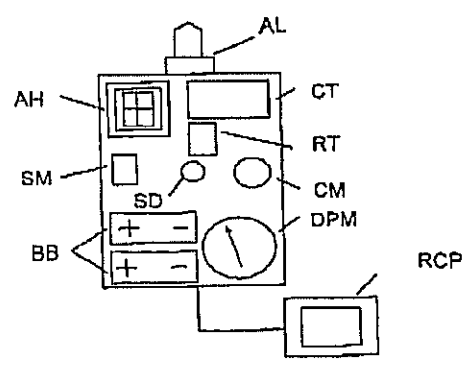

ENCLOSURE SYSTEM ALLOWING FOR HOT WORK WITHIN THE VICINITY OF FLAMMABLE AND COMBUSTIBLE MATERIAL

CROSS-REFERENCE TO RELATED APPLICATIONS

This application is a continuation-in-part of U.S. Ser. No. 11/011,848 filed Dec. 14, 2004, which is a continuation-in-part of U.S. Ser. No. 10/388,271 filed Mar. 13, 2003 now abandoned.

FIELD OF THE INVENTION

The present invention relates to a system, that incorporates one or more enclosures constructed around one or more objects at which, "hot work" is to be performed at a facility containing flammable or combustible materials. Hot work includes such things as welding, torch cutting, grinding and the like that produces heat, spark or flame. The one or more enclosures are capable of being simultaneously and independently controlled and monitored by a single control and monitoring system.

BACKGROUND OF THE INVENTION

Hot work, such as welding, at facilities where flammable and combustible materials are present, is extremely dangerous and is regulated by the appropriate governmental agency depending on the facility. In the case of offshore platforms, hot work is regulated by the Mineral Management Service (MMS); in the case of pipeline, pumping stations and associated facilities, hot work is regulated by the Department of Transportation (DOT) and in the case of refineries and chemical plants, hot work is regulated by the Occupational Safety and Health Administration (OSHA). Regulations stipulate that hot work cannot be preformed in or on any of said facilities within 35 feet from the point of impact where slag, sparks or other burning materials could fall onto or in the vicinity of a storage area of a container containing flammable or combustible materials. Also, hot work cannot be preformed within 10 feet of a pressurized pipe or vessel containing flammable or combustible material in or on any of said facilities.

In some cases, the hot work operation can be setup in a safe area and items to be hot worked can be brought to this safe area, hot worked, and then returned to their original location. In most cases it is not practical, from a strategic or from an economic point of view, to setup a remote hot work location a distance away from the item that needs to be hot worked. In the past, a facility such as a petroleum production platform, would have to be shut down during hot work operations. Further, a section of pipe or vessel in a petroleum refinery or chemical plant would have to be purged and cleaned of flammable and combustible material before any hot work could be performed within 10 feet of it. This created a substantial financial burden for the operator of the platform or plant.

A welding habitat was developed within the last few years wherein a temporary building was built around an object to be hot-worked. The habitat, also referred to as an enclosure, is equipped with gas detection monitors that would automatically signal a shut down of all welding equipment when a predetermined concentration level of flammable or combustible gas is reached. For example, U.S. Pat. No. 6,783,054 to Pregeant Jr. et al. teaches and claims a system for

conducting welding adjacent flammable materials on an offshore platform. The system contains an enclosed chamber having a blower and sensors, each of which monitors a single gas, typically a combustible gas, and the ability to automatically shutdown the welding operation if a predetermined unacceptable concentration of a combustible gas is detected at one or more sensors.

Co-pending applications U.S. Ser. No. 10/388,271 filed Mar. 13, 2003 and U.S. Ser. No. 11/011,848 filed Dec. 14, 2004, both of which are incorporated herein by reference, teach a welding habitat and control and monitoring system wherein there is wireless communication between gas detection devices and a CPU monitored by an operator.

While the industry is starting to see habitat and monitoring systems that enable hot work to be preformed in areas here-to-fore not allowed unless the facility was shut-down, there is still a need in the art for improved hot work enclosures and monitoring and control systems that lead to a more economical and safe hot work operation.

SUMMARY OF THE INVENTION

In accordance with the present invention there is provided an enclosure system comprised of one or more enclosures built about at least one object to be hot worked at a facility wherein flammable or combustible materials are located within a hazardous distance from where the hot work is to be performed, which enclosure system is comprised of:

a) at least one enclosure, each enclosure comprising: i) enclosing walls, ceiling and floor defining a chamber in which hot work is to be performed; ii) at least one door to allow workers to enter and exit; iii) at least one viewing window; iv) at least one air inlet port; v) at least one air outlet port; vi) at least one blower in fluid communication with said at least one air inlet port vii) a blower control in communication with said at least one blower, wherein said blower control is capable of allowing the blower to operate in the event of a shutdown that is not triggered by a gas detection monitor located at the intake of the blower; viii) at least one manual emergency shutdown switch inside of said enclosure; and ix) at least one manual emergency shutdown switch outside of, but within the immediate perimeter of, said enclosure;

b) a monitoring system comprised of:

i) a plurality of gas detection monitors located at predetermined locations: a) inside and outside of each enclosure; b) in the vicinity of the hot work equipment; and c) in the vicinity of the intake of each of said at least one blower; each of said gas detection monitors having a means of communication with a gas detection controller console; and

ii) a gas detection controller console comprised of: a) a means capable of receiving data transmitted from the plurality of the gas detection monitors; b) an interface means capable of communicating data from the said receiving means of said console to the CPU; c) a central processing unit (CPU) containing software capable of, inter alia, accepting, storing computing, and displaying data received from said plurality of gas detection monitors; d) a display device in communication with said CPU and capable of displaying data from said plurality of gas detection monitors; and e) an interface means capable of communicating a signal from the CPU to a control system;

c) a control system comprised of:

i) an operator controller console comprised of: a) a source of electrical power for the system; b) at least one control device; c) a means for displaying the status of each enclosure; d) the capability of communicating predetermined

bypass and system shutdown signals to a shutdown controller; and e) an audible alarm that will activate when a shutdown occurs.

ii) a shutdown controller capable of sending shutdown signals to one or more enclosure control devices, one or more shutdown control devices, and to various equipment associated with the hot work to be conducted in said one or more enclosures; and

iii) an enclosure controller comprised of a differential pressure monitor for monitoring the pressure within the enclosure relative to the pressure outside of the enclosure, a programmable logic control device, an audible alarm, a visual alarm, and a manual shut-down switch.

In a preferred embodiment, said at least one enclosure also comprises one or more of the following: a) a power control; b) a temperature probe; c) a temperature detector; d) emergency lights; or e) a capable sealing system.

In another preferred embodiment, the shutdown controller and enclosure controllers are provided with a remote control panel for performing predetermined control functions, remote of the operator controller console.

In another preferred embodiment, there is provided, devices for wireless communication between the operator controller console, the shutdown controller and the one or more enclosure controllers.

In another preferred embodiment, the components of the gas detection controller console are integrated into the operator controller console. This new console serves as a system console and utilizes a separate display device for viewing the readings of the plurality of the gas detection monitors.

In another preferred embodiment, the DPM in any one or more enclosure controllers contains a manual gauge and/or a generated signal for a scaled readout of the current reading of the DPM, on a display device.

In another preferred embodiment, the operator controller console also has the ability to bypass the shutdown function of a differential pressure monitor (DPM) at each of the said at least one enclosures by the use of a manual or logic (PLC) switch.

In another preferred embodiment, the operator controller console also has the ability to bypass the shutdown function of a differential pressure monitor (DPM) at each of the said at least one enclosures by the use of a manual or logic (PLC) switch and an automatic, temporary bypass program.

In another preferred embodiment, there is provided devices for powering the components of the shutdown controller and the enclosure controllers, via solar power.

In another preferred embodiment, the hot work is selected from welding, cutting, and grinding.

In another preferred embodiment, the facility is a petroleum drilling platform, a petroleum production platform, a jack-up rig, a pumping station, a petroleum refinery, a tank farm, a chemical plant, an ocean going tanker, or a section of a pipeline.

BRIEF DESCRIPTION OF THE FIGURES

FIG. **1** hereof is schematic representation of one preferred embodiment of the monitored enclosure system of the present invention showing three enclosures that can be simultaneously and independently monitored and controlled. This schematic shows the use of both a wireless gas detection system and some hard wired gas detection monitors used to implement an automatic blower control concept, a control system; which uses software programmed controllers and further utilizes an operator controller console; which uses a touch screen application for a display device and for controlling some predetermined control functions.

FIG. **2** hereof is a schematic representation of another preferred embodiment of the monitored enclosure system of the present invention also showing three enclosures capable of being simultaneously and independently monitored and controlled. This system utilizes most of the components of the enclosure system of FIG. **1** with the following exceptions and additions: the use of only a wireless gas detection system wherein the components of the gas detection controller console have been integrated into the operator controller console serving as a system console. This gas detection system allows for the implementation of the automatic blower control concept with an all wireless system. This figure also shows the integration of a camera and sensor module inside of the enclosure controllers. The camera is used for viewing the hot work being performed inside the enclosure and the sensor module for taking readings of variables such as temperature and humidity inside of the controllers. Another feature represented by this FIG. **2** is the use of a temperature probe and a temperature detector. The temperature probe is for monitoring the ambient temperature inside of the enclosure and the temperature detector is used to detect the temperature of an object being worked on inside the enclosure. Furthermore a "fire-eye," or arc sensitive switch is incorporated in part of the implementation of an automatic DPM bypass concept wherein the DPM will have a timed automatic bypass feature unless thee is hot work being performed inside of the enclosure.

FIG. **3** hereof is a schematic representation of another preferred embodiment of the monitored enclosure system of the present invention also showing three enclosures capable of being simultaneously and independently monitored and controlled. This system utilizes components of the enclosures system of FIG. **1** hereof with some additional components added into the operator controller console, shutdown controller and enclosure controllers, for implementing wireless communication between all the controllers in the system. The use of a plurality of remote antenna boxes is also disclosed, as they are needed in providing communication between the controllers in the control system.

FIG. **4** hereof is a schematic representation of another preferred embodiment of the monitored enclosure system of the present invention also showing three enclosures capable of being simultaneously and independently monitored and controlled. This system shows the use of components of the enclosure system represented in FIG. **3** hereof with a few additional items added for an alternate power source and remote control capabilities. Represented as a part of this figure is the use of solar panels as an alternate power source for the shutdown controller and the plurality of enclosure controllers in the system. Also added to the shutdown controller and the enclosure controllers, is the use of a touch screen application for remotely controlling some predetermined control functions.

FIG. **5** is a diagram representation of one preferred embodiment of a configuration of the enclosure controllers utilized in the system disclosed in FIG. **1**.

FIG. **6** is a diagram representation of one preferred embodiment of a configuration of the enclosure controllers utilized in the system disclosed in FIG. **2**.

FIG. **7** is a diagram representation of one preferred embodiment of a configuration of the enclosure controllers utilized in the system disclosed in FIG. **3**.

FIG. **8** is a diagram representation of one preferred embodiment of a configuration of the enclosure controllers utilized in the system disclosed in FIG. **4**.

DETAILED DESCRIPTION OF THE INVENTION

The present invention can be utilized for any type of hot work and at any facility where flammable and/or combustible materials present a safety issue during hot work operations. The term "hot work" as used herein, means any work or operation, which could produce spark, flame or excessive heat resulting in a fire or explosion in the presence of combustible or flammable materials. Non-limiting examples of the types of hot work that can be conducted in the enclosures of the present invention include all types of welding, such as gas welding, electric are welding and cutting, including gas tungsten arch welding (GTAW), gas shielding metal arch welding (GMAW), friction welding, laser welding, cutting such as with a torch or plasma cutter and cutting, brazing, soldering, and grinding with electric and pneumatic tools. Also included, is working in electrical panels while they are still energized in a location of the said facility considered to be classified, in reference to the presence of flammable or combustible materials, by a facility area classification drawing.

The present invention can be practiced at any type of facility where hot work is to be done in the vicinity of flammable or combustible material. Non-limiting examples of facilities where the instant invention can be practiced include petroleum drilling and production platforms, including jack-up rigs; pumping stations; petroleum refineries; chemical plants; tank farms where flammable or combustible materials are stored; and tankers and pipelines used for transporting flammable or combustible materials. As previously mentioned, governmental regulations are strict with respect to performing hot work at such facilities. In the past, at least a portion of such a facility would have to be shutdown prior to performing any hot work operation.

Practice of the present invention allows for safe and efficient hot work to be performed in the vicinity of flammable and combustible materials. At least one enclosure, also sometimes referred to herein as a habitat, is built around the object or objects to be hot worked. The enclosure is of temporary construction comprised of enclosing walls, ceiling extending between the walls and floor extending between the walls, thereby defining a chamber. It can take any shape depending on the object or objects to be hot worked and the particular site limitations at which it is to be built. Any material suitable for constructing such an enclosure can be used. Non-limiting examples of suitable construction materials include metals, ceramics, wood, and composite materials such as fiberglass and carbon fiber reinforced polymeric materials. Fire retardant wood is preferred, more preferably plywood, for the combination of safety, cost and convenience purposes. Scaffolding, if needed, can be provided to support at least a portion of each enclosure, particularly if the enclosure needs to be positioned lateral to a production or drilling platform. The enclosure will be large enough to allow a predetermined number of workers to comfortably work inside the enclosure with all necessary tools, hot work equipment and monitoring and safety devices. At least two workers will typically be in a single enclosure. If only two workers are provided, one worker will be the one performing the hot work and the other worker will typically be on fire watch for observing the hot work. Workers inside of the enclosure will have the capability of verbally communicating with the operator and workers outside of the enclosure by use of conventional means, preferably by two-way wireless radio.

Each enclosure will contain at least one door that preferably opens to the outside of the enclosure. The door will be one that can be easily opened from both the inside and outside of the enclosure and built in a break-away fashion, in case of an emergency. At least one shatterproof viewing window will be present on either the door or on one or more walls for observing activity within the enclosure. Shatterproof windows are well known in the art and are typically manufactured as laminated glass with an inner layer of transparent plastic material. All plastic viewing windows can also be used for the instant enclosure. The floor of each enclosure will preferably be lined with a suitable material capable of withstanding temperatures up to about 3000° F., preferably up to about 3500° F. Such a floor will preferably be comprised of a bottom layer of fire retardant plywood with a refractory cloth material. The cloth material, which will typically be supplied in rolls of ⅛ to ¼ inch thickness, is of the type marketed by Thermostatic Industries Inc. of Huntington Beach, Calif., under the tradename Panther Felt. Such a material is comprised of a refractory fiber, such as fiberglass or a ceramic fiber such as aluminosilicate or aluminoborosilicate. On top of the cloth layer will preferably be a relatively thin malleable layer of sheet metal material, preferably a stainless steel, to safely contain slag or sparks generated from the hot work operation. The floor will also preferably contain side plates (not shown) around the periphery of the floor to help contain sparks and slag. The side plates will typically be several inches to about a foot off the floor.

Each enclosure will also contain at least one inlet port to allow a suitable amount of air to be conducted into the enclosure by use of a blower, preferably an electrically operated blower. At least one air outlet port will also be provided. It is preferred that each air outlet port contain a spark resistant grill or filter to substantially reduce the potential of sparks being carried from inside of the enclosure to the outside where flammable or combustible materials may be present. Another preferred way of minimizing the risk of sparks and slag from exiting the enclosure at a high temperature is to provide a metal ventilation duct system (not shown). Such a system will be of sufficient length leading to the spark resistant filter so that any sparks or slag entering the ventilation system in the enclosure will cool to a safe temperature if they should ever reach the filter, and get through to the outside atmosphere.

Each enclosure, while in use, will be under a positive pressure to provide fresh air to workers inside the enclosure and to prevent gases from outside the enclosure from entering the interior of the enclosure. The pressure of each enclosure is monitored by a suitable differential pressure monitor (DMP), which is preferably an integral component of the enclosure controller. The present invention provides for the monitoring and control of multiple enclosures by a single operator using a single monitoring system and a single control system wherein multiple enclosures can be individually or all can be simultaneously shutdown, or certain equipment can be selectively bypassed if one or more predetermined events occur. Of course only a single enclosure can be monitored and controlled by the practice of the present invention.

It will be understood that each enclosure will also have an enclosure controller represented in FIGS. 5–8 hereof. The enclosure controller will be an integral unit containing such things as: a) a differential pressure monitor (DPM); b) at least one control device preferably a programmable logic controller; c) an audible alarm; d) a visual alarm; e) a backup battery system; f) a manual shutdown switch; g) a camera

module; h) a component sensor module; i) a radio transceiver; and j) a remote control panel, preferably of the touch screen type. A basic enclosure controller will contain a DPM, at least the one control device, an audible alarm, and a visual alarm. The next more complex enclosure controller can contain manual shutdown switch and/or a backup battery. The enclosure controller(s) for an all wireless system would also include a radio transceiver.

It will also be understood that each enclosure will also have a conventional explosion proof lighting system supported by a backup battery system, so that lighting inside each enclosure will continue to function during an emergency shutdown. A conduit sealing system will also be used to create proper seal for sealing any spaces around cables, hoses, and pipes entering an enclosure from the outside.

The present invention will be better understood with reference to the figures hereof. FIG. **1** is a simplified schematic of one preferred embodiment of the present invention showing three enclosures systems wherein welding is the hot work to be performed in any one or more of the enclosures. All three enclosures are managed by a single operator using a single monitoring system, preferably a single wireless gas detection monitoring system, and a single control system. FIG. **1** shows three enclosures E1, E2, and E3, each having at least one door D1, D2, and D3, at least one air inlet port IP1, PI2, and IP3, and at least one air outlet port OP1, OP2, and OP3. It is preferred that the door open outward and that it be a break-away door. That is, a door constructed in such a way that in the event of an emergency a single worker of average strength could exert enough force so that the door breaks away from its support means and provides the worker with a means of escape.

In one embodiment the one or more of doors D1, D2, and D3 is provided with a safety door switch similar to those sold under the name Omron with the designations D4DS, D4BS and D4BL Series. Such a switch will indicate whether or not the door is open or closed, typically by use of a spring loaded pin that will be pushed in and in contact with a set of contacts when the door is closed. This will allow voltage to pass through the switch giving the operator an indication that the door is closed. Such a switch can be programmed in one or several ways. For example, it can be programmed in conjunction with a "fire-eye" or are sensitive switch so that if hot work is being performed inside the enclosure when the door was accidentally opened, the system would automatically shut down. The switch can also be programmed so that if no hot work was being performed when the door was opened a timing circuit would allow a predetermined amount of time to pass for the door to be closed before shutting down the system. If the door were shut in this predetermined amount of time the system would not shut down.

At least one shatterproof viewing window VW1, VW2, VW2, and VW3, will also be provided for each enclosure for observing workers inside the enclosure. The three enclosures are also in communication with appropriate hot work equipment, such as welding machines and generators WG1, WG2, and WG3, and associated gas tanks T1–T6. The gas tanks will typically contain welding gases such as oxygen and acetylene. Each tank is equipped with, respectively, a shutdown value V1–V6, which is activated in case of an emergency shutdown by receiving a shutdown signal from the shutdown controller **3**. Valves V1–V6 will preferably be conventional solenoid valves readily available in the art. Further, each enclosure is provided with at least one remote manual emergency shutdown switch RSD1, RSD2, and RSD3. There is also a manual shutdown switch integrated in at least one of the enclosure controllers EC1, EC2, and EC3 and also for the operator monitoring the operator controller console **1**.

It is within the scope of this invention that pneumatic tools be used in one or more of the enclosures. Such tools will require an air compressor AC1 and associated equipment for running the pneumatic tools, such as volume tank VT1 and blow-down valve **6**. The blow-down valve **6** provides for the sudden bleeding of compressed air from the compressed air system in case of an emergency to prevent damage to such things as compressor seals. It also serves to immediately stop the operation of pneumatic tools in case of an emergency shutdown.

There is also a blower, B1, B2, and B3 associated with the inlet port of each enclosure for providing fresh air to the workers inside the enclosure, as well as for providing a positive pressure differential inside the enclosure. Although the blowers can be operated electrically or by use of compressed air, it is preferred that the blowers be electric blowers. Air is provided from the blowers to the inlet ports via any suitable hose or ducting C1, C2, and C3. It will be understood that the temperature inside of each enclosure can be controlled to some degree by providing either cool air or heated air into the blower intake. Cooled or heated air can be provided by an suitable means, such as by the use of a conventional heat exchange unit at the intake of the blower. It is preferred that each blower have associated therewith its own independent control device BC1, BC2, and BC3 each of which contains a shutdown relay SDR, in communication with said shutdown controller **3** but which can be bypassed by the operator at the operator controller console. That is, if the emergency shutdown is not triggered by the gas detection monitors 4B1, 4B2, and 4B3, at the intake of the blowers, then the blowers can be made to continue to operate for the safety of the workers inside the enclosure. It is preferred that each enclosure controller have associated therewith a power controller for controlling power to receptacles associated with each enclosure. The power controller will cut power to the receptacles in the case of a shutdown disabling all power tools used in and around the enclosure. Each power controller, as well as each blower control device will preferably contain a shutdown relay that is capable of shutting down power in response to a shutdown signal relayed to it.

As previously mentioned, each enclosed will also preferably have its own independently operated enclosure controller EC1, EC2, and EC3. This controller is a multifunctional unit container: a) at least one control device, preferably one, of the said at least one, being a programmable logic control device CT; b) an audible alarm AH; c) a visual alarm AL; d) a differential pressure monitor DPM; and e) a manual shutdown switch SD. Non-limiting examples of enclosures controllers used in the practice of the present invention are shown in FIGS. **5**, **6**, **7** and **8** hereof.

In a preferred embodiment, the enclosure controller will also contain one or more of the following items selected from: a) a manual emergency shutdown switch SD; b) a back-up battery system BB; c) a camera module CM; d) a component sensor module SM; e) a power converter supply PS; f) a radio transceiver RT, used for wireless communication; or g) a remote control panel RCP, touch screen application. The component sensor module SM will be capable of sensing one or more variable inside of the enclosure controller. Such variable include temperature, humidity, air flow, and sound. It is more preferably that at least the temperature and humidity be monitored.

In another preferred embodiment, the DPM contained in the enclosure controller will be an integral device containing: a) a differential pressure switch; b) a gauge, for a manual readout of the current differential pressure reading; and c) a transmitter for sending a signal to the programmable control device CT for a readout of the current differential pressure reading via a display device.

One type of difference pressure monitor that can be used in the practice of the present invention is the Explosion Proof Differential Switch, such as the Model 1950, manufactured by Dwyer Instruments, Inc., of Michigan City, Ind. The interior of the enclosure is at a higher pressure than the pressure outside of the enclosure to prevent flammable or combustible gases from entering the enclosure during hot work operation. If the pressure inside the enclosure drops to substantially the pressure outside of the enclosure, a signal is sent to the shutdown controller **3**, which sends the appropriate shutdown signal to all welding equipment, including tank valves, welding machines, etc. There will be times when workers need to enter or exit the enclosure during normal and safe working conditions and unless the DPM(s) can be bypassed, an emergency shutdown will occur anytime if the pressure in the enclosure drops to a level that would be substantially equal to the pressure outside the enclosure. Thus, a worker wishing to enter or exit an enclosure would communicate with the operator, who would deactivate the DPM for that enclosure until the worker has safely entered or exited the enclosure, upon which it is reactivated. It is within the scope of this invention that each enclosure be provided with a device wherein a worker desiring to enter to exit an enclosure would know the status of the hot work taking place within the enclosure. That worker can then activate a switch that would be pass the DPM and allow the door to be opened without causing a system shutdown and would allow the worker a predetermined amount of time to enter or exit the enclosure.

The three enclosures E1, E2, and E3, can all simultaneously and independently be monitored and controlled by an operator monitoring the operator controller console **1**, which is the central control center for all enclosures E1, E2 and E3. It will be understood that the three enclosures are shown in the figures hereof for illustrative purposes only. The present invention can be practiced for only one enclosure or for any number of enclosures, and all enclosures can be independently and simultaneously monitored and controlled. Of course, practical considerations, such as construction time, number of workers required, and space limitations will dictate the maximum number of enclosures that can practically be built and simultaneously operated at any given facility. The operator controller console **1** will contain: a) a suitable means of power, preferably a conventional AC-DC power converter (not shown); b) at least one control device, one of those control devices preferably being a programmable logic controller (PLC). Other non-limiting examples of typical control devices that can be used in the practice of the present invention include: electrical relays, solenoids, switches, circuit breakers and fuses; c) a suitable means for monitoring the status of any one or more enclosures and performing certain predetermined control functions, such as: i) automatically and manually by-passing a differential pressure monitor (DPM) at each of the enclosures; ii) displaying the status of devices being used in the system; iii) providing scaled readings of particular devices in the system; and iv) performing control functions as needed or as programmed; d) a manual emergency shutdown switch that is capable of shutting all of the enclosures simultaneously; and e) an appropriate audible and visual alarm system. It is preferred that the means for monitoring the status of any one or more enclosure be a suitable touch screen application having a graphic display and programmed with suitable software.

The operator controller console **1** is integrally connected to a monitoring system. The monitoring system can be any suitable system that will allow communication between the components of the system, preferably the console and the gas detection monitors and preferably wireless communication. The monitoring system is comprised of a gas detection controller console **2**, which preferably contains: a suitable radio modem transceiver; a central processing unit (CPU); a display device; and a plurality of interface cards. Interface cards are well known in the art and are typically a circuit board with the appropriate components to allow communication across boundaries, such as between hardware, or between software and hardware. Interface cards also allow communication between different software languages and codes that an application needs to communicate with each other and with hardware. It is to be understood that the entire gas detection monitoring system could be hardwired, although a wireless system is preferred. The display device is preferably part of a portable computer, more preferably a laptop computer. The gas detection monitors **4** are another component of the monitoring system and are in constant communication with the gas detection controller console **2**, and are strategically placed within and about the enclosures as well as in the vicinity of hot work equipment, blowers and any of the other various equipment associated with the present enclosures system. It is preferred that at least two gas detection monitors be located inside each enclosure, at least one located near the ceiling and at least one near the floor to better cover the entire atmosphere of the enclosure. It is also with in the scope of the present invention to place gas monitors a distance away, preferably at least 10 feet away from the enclosure in such a pattern that substantially 100% of the perimeter of each enclosure is monitored by gas detection monitors. These perimeter gas detection monitors will also be placed in high and lower positions so that gases heavier than air are monitored as well as gases lighter than air. A remote antenna box AB1, is preferably used for receiving signals (radio frequency) from the plurality of gas detection monitors **4** and carrying them to the gas detection controller console **2**, in the event that it is being used in the interior of a building.

It is within the scope of the present invention that the software used for the gas detection controller console **2** be suitable for labeling each of the plurality of gas detection monitors as to their physical location and being viewable via a display device. This will allow the operator to known immediately what monitor is sending a distress signal which will allow the operator to take immediate appropriate measures at the precise location of distress. For example, if the distress signal is not coming from a gas detection monitor located in the vicinity of the blower intake, the operator can over ride the blower shutdown function so that the blower continues to conduct fresh air into the enclosure.

As previously mentioned, each gas detection monitor **4** is in communication with the gas detection controller console **2**. The gas detection monitors **4** are preferably portable and wireless, making them capable of being carried or worn by workers. Each monitor will be programmed to measure one or more non-limiting variables, such as temperature, combustible gases including those represented in the lower explosive limit (LEL), oxygen, carbon monoxide, and hydrogen sulfide. Although single point gas detection monitors can be employed, it is preferred that multi-point moni-

tors be used. That is, a single point monitor is capable of monitoring the concentration level of only one variable, whereas a multi-point is capable of simultaneously monitoring the concentration of more than one variable and as a part of a wireless system the gas detection monitor will simultaneously communicate information to the transceiver of the gas detection controller console **2**, which in turn transmits the signal through a suitable interface means, preferably an electronic interface card, that will translate the data into a protocol suitable for the software in an associated CPU to read, analyze, display, store, and respond thereto. It is preferred that one or more of the gas detection monitors also have the capability of either two-way voice communication or receiving text messages as a part of a network. The gas detection controller console **2** interfaces with the operator controller console **1** by any suitable means, such as also by the use of a suitable electronic interface card. The operator controller console **1** will have the capabilities as previously mentioned, such as showing the status of each enclosure, etc. The CPU of the gas detection controller console will also be capable of sending shutdown signals to the operator controller console **1**, which in turn sends the signal to the shutdown controller **3**, which signals the targeted equipment to shutdown. The ability of an operator to be able to monitor, on a display device, the concentration of atmospheric variables such as gas levels, temperature, etc., allows the operator to take the proper preemptive action prior to a level of emergency being reached. As previously mentioned, the operator controller console **1** will preferably display the status of enclosure systems, preferably by the use of a touch screen application. That is, a device that has the capability of being programmed to display the status of devices in the system based on predetermined variables. Any conventional touch screen application may be used although a color screen is preferred for extended alarm range notification through the use of colors for different alarm levels.

An upper concentration level for each atmospheric variable is programmed into the CPU software and if that level is reached, the system will automatically shutdown all targeted hot work equipment at all enclosures via communication with the shutdown controller **3**. The shutdown controller **3** is in communication with all systems, devices and equipment of the overall system. For example, upon receiving an emergency shutdown signal from the operator controller console **1** via the gas detection controller console **2**, a shutdown signal is sent to valves V1–V6 shutting down all gas delivery to the welding equipment. A shutdown signal is also sent to blower controls BC1 to BC3 as well as to the blow-down valve **6** and welding equipment WG1 to WG3. As previously mentioned, it is within the scope of this invention that blowers B1 to B3 continue to operate if it is determined that an emergency was not caused by the presence of combustible or flammable gases at the gas detection monitor at the intake of the blowers B1–B3. It is also within the scope of this invention that a function be provided that can shutdown all hot work in the case of a facility shutdown. That is, if a production platform, refinery or other facility has a general emergency shutdown, all hot-work will automatically be shutdown as a part of the facility shutdown.

In a preferred embodiment, the use of both a wireless gas detection system and some hard wired gas monitors, is used for implementing the automatic blower control concept.

Other preferred embodiments are represented in FIGS. **2** to **4** hereof. The components of the gas direction controller console are integrated into the operator controller console, becoming a system console, and a portable computer is used as a display device, labeled as device (2) in these figures.

FIG. **2** hereof represents another preferred embodiment of the present invention. FIG. **2** further shows the use of a temperature probe TP1, TP2, TP3 and a temperature detector TD1, TD2, and TD3 in the inside of the enclosures E1, E2 and E3. The temperature probe is used to take ambient readings of the interior of the enclosure. These reachings can be used to warn the operator, sound an alarm and/or initiate a shutdown. The temperature detectors are used to take temperature readings of an object being used in the enclosures E1–E3. These readings can also be used to perform the functions previously described. All of FIG. **2** components that are common to FIG. **1** have the same nomenclature as those of FIG. **1** hereof. FIG. **2** hereof also shows more hardwired connections because of the addition of a camera module and a component sensor module as part of the enclosure controller. It is preferred in some instances that these two modules be hardwired to the shutdown console and controller console.

FIG. **3**, which shows an all wireless monitoring system, represents another preferred embodiment of the present invention. FIG. **4** further shows the use of a plurality of additional remote antenna boxes AB2–AB6. The remote antenna boxes are used for wireless communication between the controllers being used in the operator controller console **1**, the shutdown controller **3** and the enclosure controllers EC1, EC2, and EC3. All of FIG. **3** components that are common to FIG. **3** have the same nomenclature as those of FIG. **2** hereof.

FIG. **4** hereof represents another preferred embodiment of the present invention which is substantial all wireless system. FIG. **4** further shows the use of a plurality of remote control panels RCP1, RCP2, RCP3, and RCP4. These remote control panels are a touch screen application, which can be integrated into the shutdown and enclosure controllers or used remotely from the controllers, e.g. outside of the enclosures E1, E2 and E3 for controlling and viewing certain predetermined functions of the control system. FIG. **4** further discloses the use of an alternate power source for the shutdown and enclosure controllers. This alternate power source is preferably in the form of a solar panel SP1, SP2, SP3, and SP4; these devices can be used in lieu of a conventional AC-DC power converter supply. All of FIG. **4** components that are common to FIG. **3** hereof have the same nomenclature as those of FIG. **3** hereof.

FIG. **5** is a diagram representation of a preferred embodiment of the enclosure controller of the enclosure system represented in FIG. **1** hereof. This controller would be used in the inside of the enclosures E1, E2 and E3. It contains the following components listed: the audible alarm AH, the visual alarm AL, the controller CT, the manual shutdown switch SD, the back-up batteries BB and the differential pressure monitor DPM.

FIG. **6** is a diagram representation of another preferred embodiment of the enclosure controller. It shows the components used in the system represented in FIG. **2** hereof. It contains the following additional components from the controller described in FIG. **5**; the camera module CM and the sensor module SM. All of FIG. **6** components that are common to FIG. **5** have the same nomenclature as those of FIG. **5** hereof.

FIG. **7** is a diagram representation of another preferred embodiment of the enclosure controller and is the enclosure controller if the enclosure system represented in FIG. **3** hereof. It contains the following additional components from the controller described in FIG. **6**: the power supply PS

and the radio transceiver RT. All of FIG. **7** components that are common to FIG. **6** have the same nomenclature as those of FIG. **6** hereof.

FIG. **8** is a diagram representation of the enclosure controller of the enclosure system represented in FIG. **4** hereof. It contains the following exceptions and additional components from the controller box described in FIG. **7**: the power supply PS, has been removed due to the use of the alternate power source or solar panel SP2–SP4 described in FIG. **4**, the DPM although still used has been changed to one that also contains a gauge for a visual display of the readings being taken, and a remote control panel for transmitting a signal to the operators controller console touch screen application, for viewing of the current readings. All of FIG. **7** components that are common to FIG. **6** have the same nomenclature as those of FIG. **6** hereof.

What is claimed is:

1. An enclosure system comprised of one or more enclosures built about at least one object to be hot worked at a facility wherein flammable or combustible materials are located within a hazardous distance from where the hot work is to be preformed, which enclosure system is comprised of:

a) at least one enclosure, each enclosure comprising: i) enclosing walls, ceiling and floor defining a chamber in which the hot work is to be performed; ii) at least one door to allow workers to enter and exit; iii) at least one air inlet port; iv) at least one air outlet port; v) at least one blower having an intake and exhaust, which exhaust is in fluid communication with said at least one air inlet port; vi) a blower control in communication with said at least one blower and to a gas detection monitor at the intake of said at least one blower and to a shutdown controller, wherein said blower control has the capability of allowing the blower to continue to operate during an emergency shutdown that it not triggered by a combustible or flammable gas detected at said gas detection monitor located at the intake of said at least one blower; vii) at least one manual emergency shutdown switch inside of said enclosure; and viii) at least one manual emergency shutdown switch outside of, but within the perimeter of, said enclosure;

b) a monitoring system comprised of:

i) a plurality of gas detection monitors located at the predetermined locations inside and outside of each enclosure; wherein each of said gas detection monitors having a means of communication with a gas detection controller console; and

ii) a gas detection controller console comprised of: a) a means capable of receiving data transmitted from the plurality of the gas detection monitors; b) an interface means capable of communicating data from the said receiving means of the console to a central processing unit; c) the central processing unit containing software capable of, inter alia, accepting, storing computing, and displaying data received from said plurality of gas detection monitors; d) a display device in communication with said central processing unit and capable of displaying data from said plurality of gas detection monitors; and e) an interface means capable of communicating a signal from said central processing unit to a control system;

c) the control system comprised of:

i) an operator controller console comprised of: a) a source of electrical power for the system; b) at least one control device; c) a means for displaying the status of each enclosure; d) a capability of communicating predetermined bypass and system shutdown signals to a shutdown controller; and e) an audible alarm that will activate when a shutdown occurs;

ii) a shutdown controller capable of sending shutdown signals to one or more enclosure control devices one or more shutdown control devices, and to various equipment associated with the hot work to be conducted in said one or more enclosures; and

iii) an enclosure controller comprised of a differential pressure monitored for monitoring the pressure within the enclosure relative to the pressure outside of the enclosure, a programmable logic control device, an audible alarm and a visual alarm.

2. The enclosure system of claim **1** wherein the walls, floor door and ceiling of the enclosure are composed of fire retardant wood.

3. The enclosure system of claim **2** wherein the floor of said enclosure is further covered with a layer of fire proof refractory cloth material on top of which is a layer of sheet metal.

4. The enclosure system of claim **1** wherein the door of each enclosure is a breakaway door that opens outward.

5. The enclosure system of claim **1** wherein each enclosure is provided with an explosion proof interior lighting system.

6. The enclosure system of claim **1** wherein the outlet port of at least one enclosure is provided with a spark resistant filter.

7. The enclosure system of claim **1** wherein the hot work to be performed is welding.

8. The enclosure system of claim **1** wherein the blower of each enclosure is an electrically operated blower.

9. The enclosure system of claim **1** wherein at least two gas detection monitors is located in each enclosure.

10. The enclosure system of claim **1** wherein the various equipment associated with the hot work is selected from a) welding machines, b) generators, c) air compressors, d) tanks for holding gases for a hot work operation, and e) a blow-down valve capable of bleeding compressed air from a compressed air system in the event of an emergency shut-down.

11. The enclosure system of claim **1** wherein the source of electrical power is an AC to DC power converter.

12. The enclosure system of claim **1** which is located at a facility selected from a drilling platform, a production platform, a jack-up right, a pumping station, a petroleum refinery, a chemical plant, a tank farm, an ocean going tanker, and a section of pipeline.

13. The enclosure system of claim **1** wherein there are at least two enclosures.

14. The enclosure system of claim **1** wherein the operator controller console contains a bypass function that can override a shutdown signal to one or more blowers.

15. The enclosure system of claim **1** wherein the operator controller console contains a bypass function that can override a shutdown signal triggered by a differential pressure monitor in any one or more of said enclosures to allow workers to enter and exit said one or more enclosures without triggering a shutdown.

16. The enclosure system of claim **1** wherein the gas detection console and the operator console is one integrated single console.

17. The enclosure system of claim **1** wherein one or more of said enclosures contains a temperature sensing means for measuring the temperature of an item during hot-working.

18. The enclosure system of claim **1** wherein one or more of the enclosure controllers contains at least one of: a) backup batteries; b) a radio transceiver; c) a camera module

for visually monitoring the interior of the enclosure, the exterior of the enclosure, or both; d) a remote control panel; e) and a manual shutdown switch.

19. The enclosure system of claim **1** wherein a solar panel supplies power to the shutdown controller, the operator controller, or both.

20. The enclosure system of claim **1** wherein there is wireless communication between the operator controller and at least one enclosure controllers.

21. The enclosure system of claim **1** wherein at least one of the gas detection monitors is handheld.

22. The enclosure of claim **1** wherein at least one differential pressure monitor contains a means for continuously measuring and displaying pressure.

23. The enclosure system of claim **1** wherein a solar panel supplies power to the shutdown controller, the operator controller, or both.

24. The enclosure of claim **1** wherein the enclosure also contains at least one viewing window.

25. An enclosure system comprised of one or more enclosures built about at least one object to be hot worked at a facility wherein flammable or combustible materials are located within a hazardous distance from where the hot work is to be performed, which enclosure system is comprised of:

a) at least one enclosure, each enclosure comprising: i) enclosing walls, ceiling and floor defining a chamber in which the hot work is to be performed; ii) at least one door to allow workers to enter and exit; iii) at least one viewing window; iv) at least one air inlet port; v) at least one air outlet port; vi) at least one blower having an intake and an exhaust, which exhaust is in fluid communication with said at least one air inlet port; vii) a blower control in communication with said at least one blower and to a gas detection monitor at the intake of said at least one blower and to a shutdown controller, wherein said blower control has the capability of allowing the blower to continue to operate during an emergency shutdown that is not triggered by a combustible or flammable gas detected at a gas detection monitor located at the intake of said one or more blower; viii) at least one manual emergency shutdown switch inside of said enclosure; and ix) at least one manual emergency shutdown switch outside of, but within the immediate perimeter of, said enclosure;

b) a monitoring system comprised of:

i) a plurality of gas detection monitors located at the predetermined locations inside and outside of each enclosure, wherein at least one gas detection monitor is handheld and portable; and wherein each of said gas detection monitors having a wireless means of communication with a gas detection controller console; and

ii) a gas detection controller console comprised of: a) a means capable of receiving wireless data transmitted from the plurality of the gas detection monitors; b) an interface means capable of communicating data from the said receiving means of the console to a central processing unit; c) a central processing unit containing software capable of, inter alia, accepting, storing computing, and displaying data received from said plurality of gas detection monitors; d) a display device in communication with said central processing unit and capable of displaying data from said plurality of gas detection monitors; and e) an interface means capable of communicating a signal from said central processing unit to a control system.

c) a control system comprised of:

i) an operator controller console comprised of: a) a source of electrical power for the system; b) at least one control device; c) a means for displaying the status of each enclosure; d) the capability of communicating predetermined bypass and system shutdown signals to a shutdown controller; e) a by-pass function that has the capability of overriding a shutdown signal triggered by a differential pressure monitor in any one or more of said enclosures to allow workers to enter and exit said one or more enclosures without triggering a shutdown; and f) an audible alarm that will activate when a shutdown occurs;

ii) a shutdown controller capable of sending shutdown signals to one or more enclosure control devices, one or more shutdown control devices, and to various equipment associated with the hot work to be conducted in said one or more enclosures; and wherein there is wireless communication between the operator controller, the gas detection controller, and the shutdown controller; and

iii) an enclosure controller comprised of a differential pressure monitor for monitoring the pressure within the enclosure relative to the pressure outside of the enclosure, a programmable logic control device, an audible alarm and a visual alarm.

26. The enclosure system of claim **25**, wherein the walls, floor, door and ceiling of the enclosure are composed of fire retardant wood and which floor is further covered with a layer of fire proof refractory cloth material on top of which is a layer of sheet metal.

27. The enclosure system of claim **25**, wherein the door of each enclosure is a breakaway door that opens outward.

28. The enclosure system of claim **25** wherein each enclosure is provided with an explosion proof interior lighting system and wherein the outlet port of at least one enclosure is provided with a spark resistant filter.

29. The enclosure system of claim **25**, wherein the blower of each enclosure is an electrically operated blower.

30. The enclosure system of claim **25** wherein at least two gas detection monitors is located in each enclosure.

31. The enclosure system of claim **25** wherein the various equipment associated with the hot work is selected from a) welding machines, b) generators, e) air compressors, d) tanks for holding gases for a hot work operation, and e) a blow-down valve capable of bleeding compressed air from a compressed air system in the event of an emergency shut-down.

32. The enclosure system of claim **25** wherein the source of electrical power is an AC to DC power converter.

33. The enclosure system of claim **25** wherein is located at a facility selected from a drilling platform, a production platform, a jack-up rig, a pumping station, a petroleum refinery, a chemical plant, a tank farm, an ocean going tanker, and a section of pipeline.

34. The enclosure system of claim **25** wherein the operator controller console contains a bypass function that can override a shutdown signal to one or more blowers.

35. The enclosure system of claim **25** wherein the operator controller console contains a bypass function that can override a shutdown signal triggered by a differential pressure monitor in any one or more of said enclosures to allow workers to enter and exit said one or more enclosures without triggering a shutdown.

36. The enclosure system of claim 25 wherein the gas detection console and the operator console is one integrated single console.

37. The enclosure system of claim 25 wherein one or more of said enclosures contains a temperature sensing means for measuring the temperature of an item during hot-working.

38. The enclosure system of claim 25 wherein one or more of the enclosure controllers contains at least one of: a) backup batteries; b) a radio transceiver; c) a camera module for visually monitoring the interior of the enclosure, the exterior of the enclosure, or both; d) a remote control panel; e) and a manual shutdown switch.

39. The enclosure of claim 25 wherein at least one differential pressure monitor contains a means for continuously measuring and display pressure.

40. The enclosure of claim 25 wherein the enclosure also contains at least one viewing window.

* * * * *



UNITED STATES PATENT AND TRADEMARK OFFICE

UNITED STATES DEPARTMENT OF COMMERCE
United States Patent and Trademark Office
Address: COMMISSIONER FOR PATENTS
P.O. Box 1450
Alexandria, Virginia 22313-1450
www.uspto.gov

APPLICATION NO.	FILING DATE	FIRST NAMED INVENTOR	ATTORNEY DOCKET NO.	CONFIRMATION NO.
11/176,495	07/07/2005	Jason P. Albarado	16102-13	5646

23329 7590 02/12/2007

KEAN, MILLER, HAWTHORNE, D'ARMOND,
MCCOWAN & JARMAN, L.L.P.
ONE AMERICAN PLACE, 22ND FLOOR
P.O. BOX 3513
BATON ROUGE, LA 70821

EXAMINER	
TANG, SON M	

ART UNIT	PAPER NUMBER
2612	

MAIL DATE	DELIVERY MODE
02/12/2007	PAPER

Please find below and/or attached an Office communication concerning this application or proceeding.

Petition to Change Inventorship under 37 CFR 1.48(a)

1. In view of the papers filed on 11/19/2006, it has been found that this nonprovisional application, as filed, through error and without deceptive intent, improperly set forth the inventorship, and accordingly, this application has been corrected in compliance with 37 CFR 1.48(a). The inventorship of this application has been changed by adding Todd J. Hutchinson as co-inventor.

The application will be forwarded to Technology Center 2600 technical support staff for issuance of a corrected filing receipt, and correction of Office records to reflect the inventorship as corrected.

2. Any inquiry concerning this communication should be directed to Daniel Wu at telephone number 571-272-2964.

DANIEL WU
SUPERVISORY PATENT EXAMINER
02/09/07

US007518484B2

(12) **United States Patent**
Albarado et al.

(10) **Patent No.: US 7,518,484 B2**
(45) **Date of Patent: *Apr. 14, 2009**

(54) **ENCLOSURE SYSTEM ALLOWING FOR HOT WORK WITHIN THE VICINITY OF FLAMMABLE AND COMBUSTIBLE MATERIAL**

(75) Inventors: **Jason P. Albarado**, Houma, LA (US); **Todd J. Hutchinson**, Houma, LA (US)

(73) Assignee: **Alford Safety Services, Inc.**, Houma, LA (US)

(*) Notice: Subject to any disclaimer, the term of this patent is extended or adjusted under 35 U.S.C. 154(b) by 352 days.

This patent is subject to a terminal disclaimer.

(21) Appl. No.: **11/605,653**

(22) Filed: **Nov. 29, 2006**

(65) **Prior Publication Data**

US 2007/0120695 A1 May 31, 2007

Related U.S. Application Data

(63) Continuation-in-part of application No. 11/176,495, filed on Jul. 7, 2005, now Pat. No. 7,193,501, which is a continuation-in-part of application No. 11/011,848, filed on Dec. 14, 2004, now Pat. No. 7,091,848, which is a continuation-in-part of application No. 10/388,271, filed on Mar. 13, 2003, now abandoned.

(51) **Int. Cl.**
G05B 23/02 (2006.01)

(52) **U.S. Cl.** **340/3.1**; 340/506; 340/626; 340/679; 340/691.6

(58) **Field of Classification Search** 340/506, 340/626, 632, 679, 691.6, 3.1; 700/1
See application file for complete search history.

(56) **References Cited**

U.S. PATENT DOCUMENTS

3,626,836	A *	12/1971	Schneidler	454/339
4,297,940	A *	11/1981	Hainline	454/49
4,298,955	A *	11/1981	Munday et al.	700/266
4,721,947	A	1/1988	Brown	

(Continued)

FOREIGN PATENT DOCUMENTS

GB	2311847	A	10/1997
GB	2382593	A	6/2003

OTHER PUBLICATIONS

Welding Hot Work Habitats; SPE 27238 Health, Safety and Environment in Oil and Gas Exploration and Production Conference, Jan. 25-27, 1994, Jakarta, Indonesia; Author: Browning, I.G.

Primary Examiner—Daniel Wu
Assistant Examiner—Son M Tang
(74) *Attorney, Agent, or Firm*—Henry E. Naylor; Kean Miller Hawthorne D'Armond McCowan & Jarman, LLP

(57) **ABSTRACT**

A system, that incorporates one or more enclosures constructed around one or more objects at which, "hot work" is to be performed at a facility at a first location containing flammable or combustible materials. The one or more enclosures are capable of being simultaneously and independently controlled and monitored by a single control and monitoring system which is capable of being in radio communication with a control system at a second, but remote, location.

8 Claims, 4 Drawing Sheets

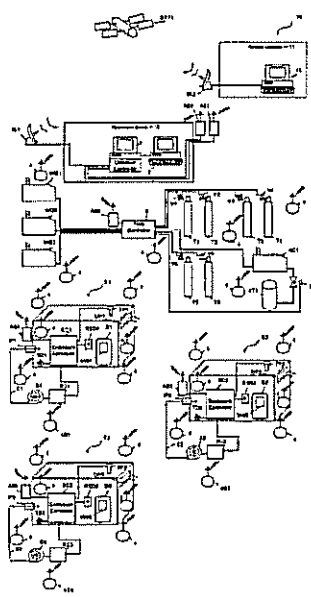

EXHIBIT
C

U.S. PATENT DOCUMENTS

4,767,913	A		8/1988	Weber et al.
4,866,594	A		9/1989	David
5,018,321	A	*	5/1991	Wardlaw, III 52/2.17
5,101,604	A	*	4/1992	Wardlaw, III 52/2.17
5,565,852	A	*	10/1996	Peltier et al. 340/632
5,755,884	A	*	5/1998	Buckler et al. 118/317
5,854,994	A	*	12/1998	Canada et al. 702/56
6,060,689	A	*	5/2000	Wilson 219/137.41
6,130,412	A	*	10/2000	Sizemore 219/481
6,182,497	B1		2/2001	Krajet
6,540,603	B1	*	4/2003	Koskinen 454/58
6,583,386	B1	*	6/2003	Ivkovich 219/130.01
6,687,005	B2	*	2/2004	Kim 356/437
6,783,054	B1	*	8/2004	Pregeant et al. 228/102
7,091,848	B2		8/2006	Albarado
7,193,501	B1		3/2007	Albarado et al.
2004/0122353	A1	*	6/2004	Shahmirian et al. 604/65

* cited by examiner

Figure 1

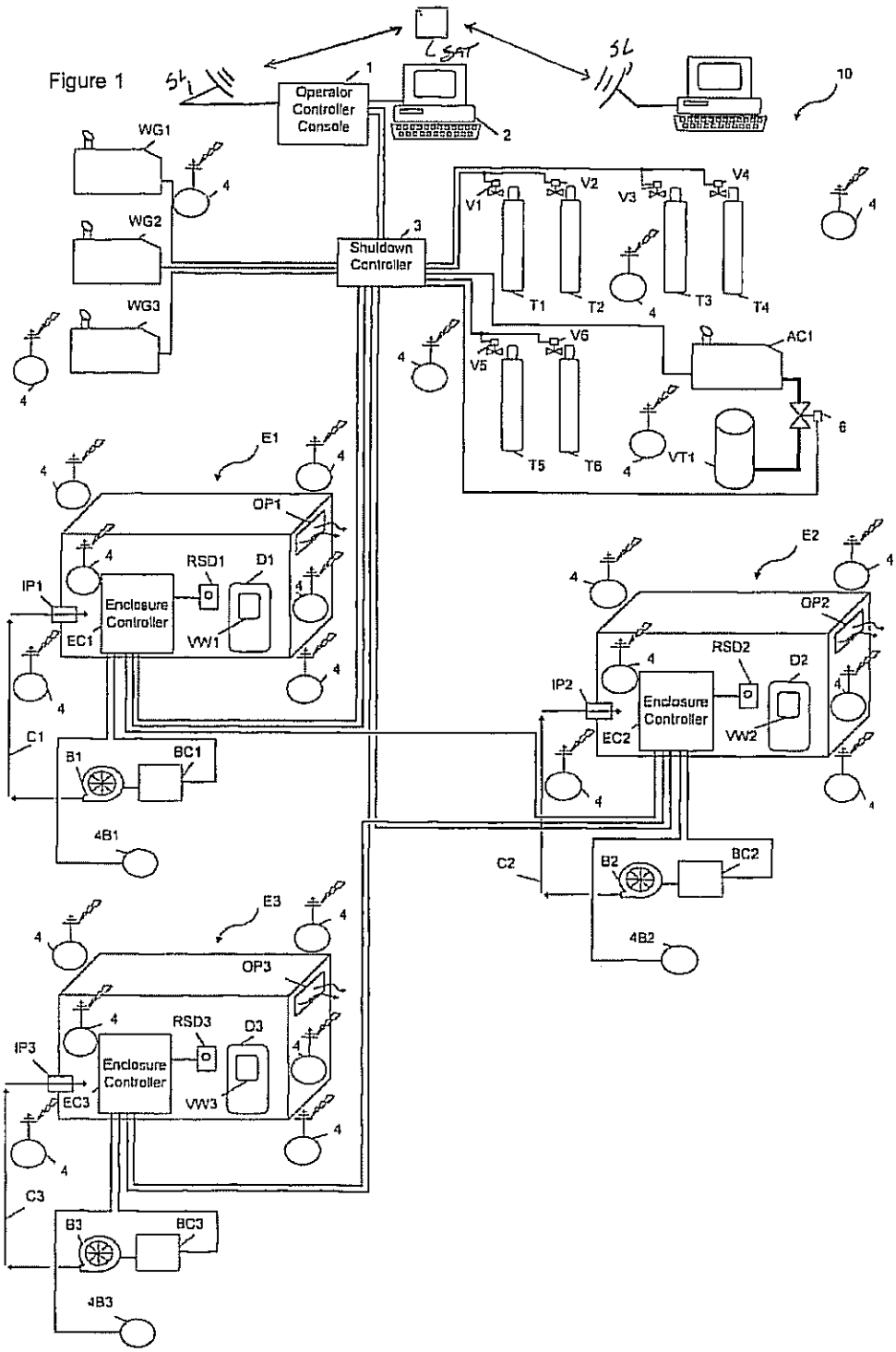
SL
SAT
SL
10
Operator Controller Console
1
2
WG1
WG2
WG3
4
Shutdown Controller
3
V1
V2
V3
V4
T1
T2
T3
T4
V5
V6
T5
T6
VT1
AC1
6
E1
OP1
RSD1
D1
IP1
Enclosure Controller
EC1
VW1
C1
B1
BC1
4B1
E2
OP2
RSD2
D2
IP2
Enclosure Controller
EC2
VW2
C2
B2
BC2
4B2
E3
OP3
RSD3
D3
IP3
Enclosure Controller
EC3
VW3
C3
B3
BC3
4B3

Figure 2

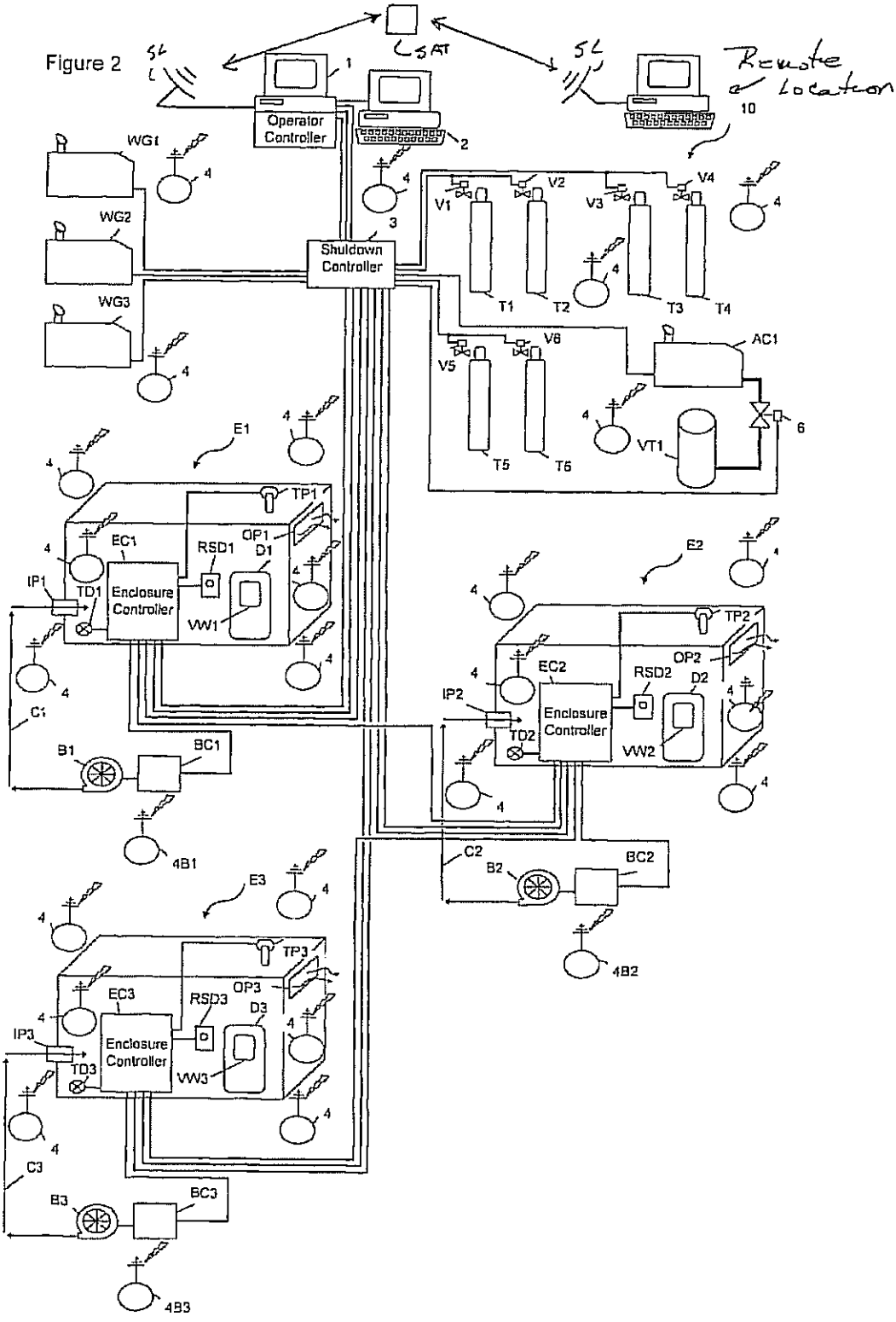
SAT
SAT
Remote Location
10
Operator Controller
1
2
WG1
WG2
WG3
4
3
Shutdown Controller
V1
V2
V3
V4
T1
T2
T3
T4
V5
V6
T5
T6
AC1
VT1
6
E1
TP1
EC1
RSD1
OP1
D1
IP1
TD1
Enclosure Controller
VW1
C1
B1
BC1
4B1
E2
TP2
EC2
RSD2
OP2
D2
IP2
TD2
Enclosure Controller
VW2
C2
B2
BC2
4B2
E3
TP3
EC3
RSD3
OP3
D3
IP3
TD3
Enclosure Controller
VW3
C3
B3
BC3
4B3

Figure 3

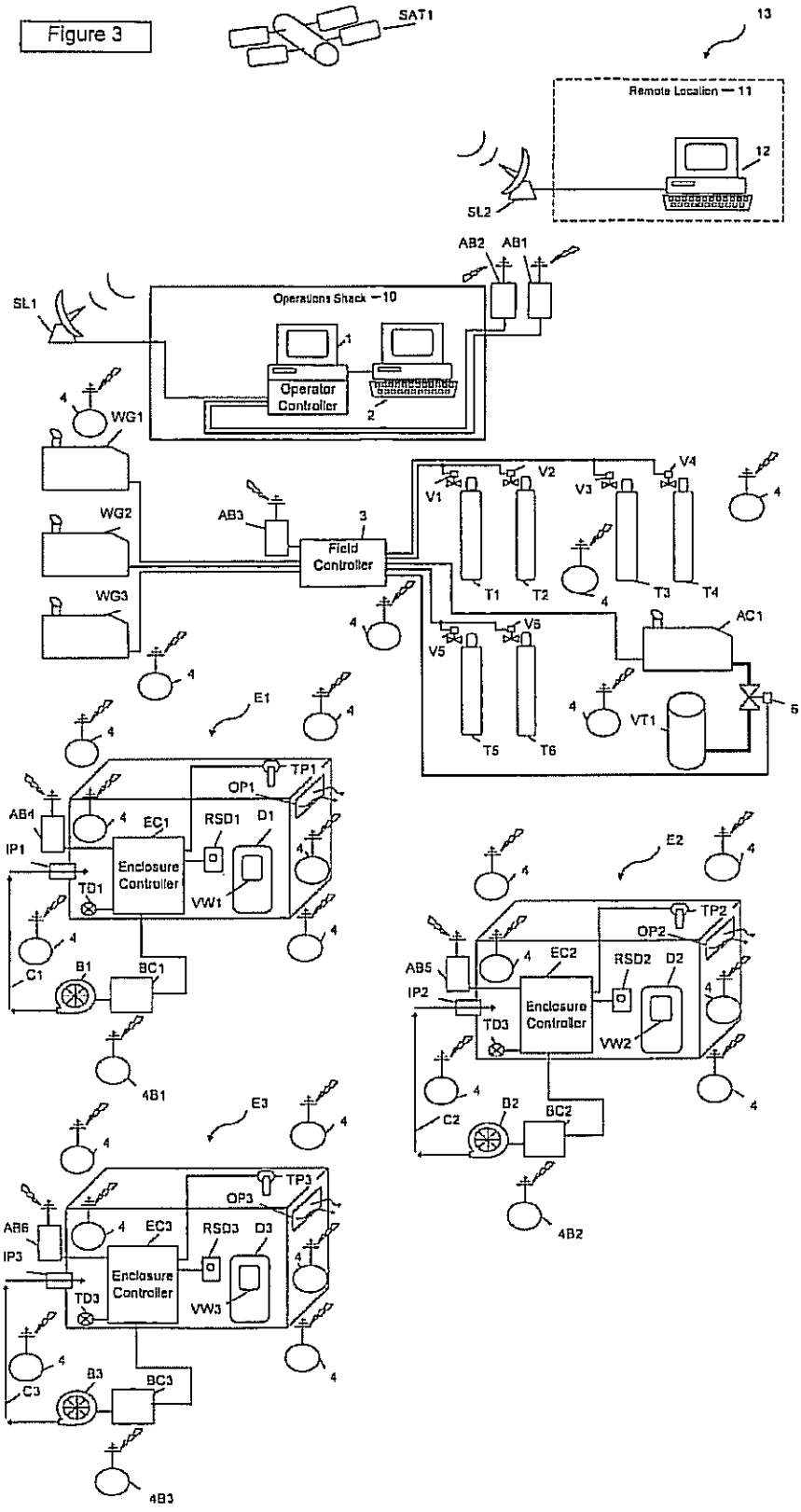
SAT1
13
Remote Location — 11
12
SL2
AB2
AB1
SL1
Operations Shack — 10
Operator Controller
1
2
4
WG1
WG2
WG3
AB3
3
Field Controller
V1
V2
V3
V4
T1
T2
T3
T4
V5
V6
T5
T6
AC1
VT1
5
E1
TP1
OP1
AB4
EC1
RSD1
D1
IP1
Enclosure Controller
TD1
VW1
C1
B1
BC1
4B1
E2
TP2
OP2
AB5
EC2
RSD2
D2
IP2
TD2
VW2
C2
B2
BC2
4B2
E3
TP3
OP3
AB6
EC3
RSD3
D3
IP3
TD3
VW3
C3
B3
BC3
4B3

Figure 4

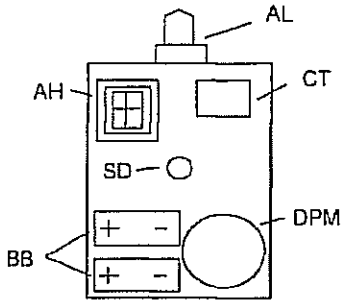

Figure 5

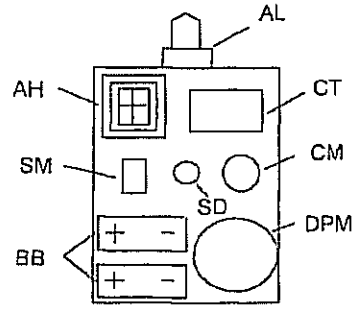

Figure 6

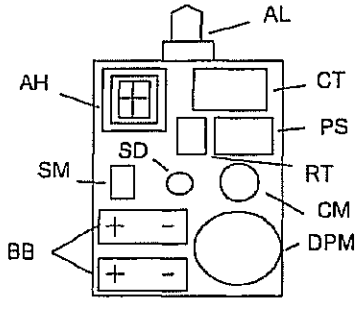

Figure 7

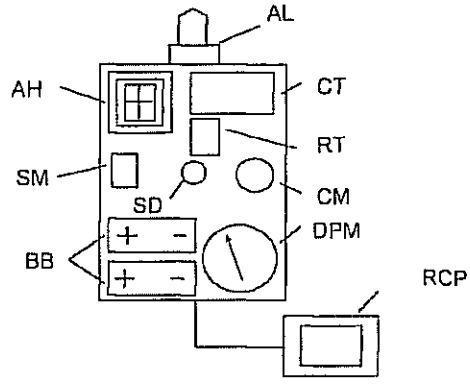

ENCLOSURE SYSTEM ALLOWING FOR HOT WORK WITHIN THE VICINITY OF FLAMMABLE AND COMBUSTIBLE MATERIAL

CROSS REFERENCE TO RELATED APPLICATIONS

This application is a continuation-in-part of U.S. Ser. No. 11/176,495 filed Jul. 7, 2005 now U.S. Pat No. 7,193,501 which is a continuation-in-part of U.S. Ser. No. 11/011,848 filed Dec. 14, 2004 now U.S. Pat. No. 7,091,848 issued on Aug. 15, 2006 which is a continuation-in-part of U.S. Ser. No. 10/388,271 filed Mar. 13, 2003 now abandoned.

FIELD OF THE INVENTION

The present invention relates to a system, that incorporates one or more enclosures constructed around one or more objects at which, "hot work" is to be performed at a facility at a first location containing flammable or combustible materials. The one or more enclosures are capable of being simultaneously and independently controlled and monitored by a single control and monitoring system which is capable of being in wireless communication with a control system at a second, but remote, location.

BACKGROUND OF THE INVENTION

Hot work, such as welding, at facilities where flammable and combustible materials are present, is extremely dangerous and is regulated by the appropriate governmental agency depending on the facility. In the case of offshore platforms, hot work is regulated by the Mineral Management Service (MMS); in the case of a pipeline, pumping stations and associated facilities, hot work is regulated by the Department of Transportation (DOT) and in the case of refineries and chemical plants, hot work is regulated by the Occupational Safety and Health Administration (OSHA). Regulations stipulate that hot work cannot be preformed in or on any of said facilities within 35 feet from the point of impact where slag, sparks or other burning materials could fall onto or in the vicinity of a storage area of a container containing flammable or combustible materials. Also, hot work cannot be preformed within 10 feet of a pressurized pipe or vessel containing flammable or combustible material in or on any of said facilities.

In some cases, the hot work operation can be setup in a safe area and items to be hot worked can be brought to this safe area, hot worked, and then returned to their original location. In most cases it is not practical, from a strategic or from an economic point of view, to setup a remote hot work location a distance away from the item that needs to be hot worked. In the past, a facility such as a petroleum production platform, would have to be shut down during hot work operations. Further, a section of pipe or vessel in a petroleum refinery or chemical plant would have to be purged and cleaned of flammable and combustible material before any hot work could be performed within 10 feet of it. This created a substantial financial burden for the operator of the platform or plant.

A welding habitat was developed within the last few years wherein a temporary building was built around an object to be hot-worked. The habitat, also referred to as an enclosure, is equipped with gas detection monitors that would automatically signal a shut down of all welding equipment when a predetermined concentration level of flammable or combustible gas is reached. For example, U.S. Pat. No. 6,783,054 to Pregeant Jr. et al. teaches and claims a system for conducting welding adjacent flammable materials on an offshore platform. The system contains an enclosed chamber having a blower and sensors, each of which monitors a single gas, typically a combustible gas, and the ability to automatically shutdown the welding operation if a predetermined unacceptable concentration of a combustible gas is detected at one or more sensors.

U.S. Pat. No. 7,091,848 to Alford Safety Services, Inc and co-pending patent application Ser. No. 11/176,495 teach habitat systems allowing for hot work to be performed within the vicinity of flammable and combustible materials. The hot work is monitored and controlled though the use of gas detectors and central processing units, but there is no provision for data being transmitted to a remote location or for the system to be controlled from a remote location.

While the industry is starting to see habitat and monitoring systems that enable hot work to be preformed in areas hereto-fore not allowed unless the facility was shut-down, there is still a need in the art for improved hot work enclosures and monitoring and control systems that lead to a more economical and safe hot work operation.

SUMMARY OF THE INVENTION

In accordance with the present invention there is provided an enclosure system comprised of one or more enclosures built about at least one object to be hot worked at a facility wherein flammable or combustible materials are located within a hazardous distance from where the hot work is to be performed, which enclosure system is comprised of:

a) at least one enclosure, each enclosure comprising: i) enclosing walls, ceiling and floor defining a chamber in which the hot work is to be performed; ii) at least one door to allow workers to enter and exit; iii) at least one air inlet port; iv) at least one air outlet port; v) at least one blower having an intake and exhaust, which exhaust is in fluid communication with said at least one air inlet port; vi) a blower control in communication with said at least one blower and to a gas detection monitor at the intake of at least one of said one or more blowers and to a shutdown controller, wherein said blower control has the capability of allowing the blower to continue to operate during an emergency shutdown that is not triggered by a combustible or flammable gas detected at a gas detection monitor located at the intake of said one or more blower; vii) at least one manual emergency shutdown switch inside of said enclosure; and viii) at least one manual emergency shutdown switch outside of, but within the immediate perimeter of, said enclosure;

b) a monitoring system comprised of:

i) a plurality of gas detection monitors located at the predetermined locations inside and outside of each enclosure; wherein each of said gas detection monitors having a means of communication with a gas detection controller console; and

ii) a gas detection controller console comprised of: a) a means capable of receiving data transmitted from the plurality of the gas detection monitors; b) an interface means capable of communicating data from the said receiving means of the console to a central processing unit; c) the central processing unit containing software capable of, inter alia, accepting, storing computing, and displaying data received from said plurality of gas detection monitors; d) a display device in communication with said central processing unit and capable of displaying data from said plurality of gas detection monitors;

and e) an interface means capable of communicating a signal from said central processing unit to a control system;

c) the control system comprised of:

i) an operator controller console comprised of: a) a source of electrical power for the system; b) at least one control device; c) a means for displaying the status of each enclosure; d) a capability of communicating predetermined bypass and system shutdown signals to a shutdown controller; and e) an audible alarm that will activate when a shutdown occurs;

ii) a shutdown controller capable of sending shutdown signals to one or more enclosure control devices, one or more shutdown control devices, and to various equipment associated with the hot work to be conducted in said one or more enclosures;

iii) an enclosure controller comprised of a differential pressure monitor for monitoring the pressure within the enclosure relative to the pressure outside of the enclosure, a programmable logic control device, an audible alarm and a visual alarm; and

iv) a controller console at a remote location and in wireless communication with said operator controller console and shutdown controller, which controller console is capable of performing all the functions of said operator controller console and which is also capable of downloading software said central processing unit and programmable logic control device.

In a preferred embodiment the wireless communication is performed via a link to a communications satellite.

In a preferred embodiment, said at least one enclosure also comprises one or more of the following: a) a power control; b) a temperature probe; c) a temperature detector; d) emergency lights; or e) a cable sealing system.

In another preferred embodiment, there is provided, devices for wireless communication between the operator controller console, the shutdown controller and the one or more enclosure controllers.

In another preferred embodiment, the components of the gas detection controller console are integrated into the operator controller console. This new console serves as a system console and utilizes a separate display device for viewing the readings of the plurality of the gas detection monitors.

In another preferred embodiment, the DPM in any one or more enclosure controllers contains a manual gauge and/or a generated signal for a scaled readout of the current reading of the DPM, on a display device.

In another preferred embodiment, the operator controller console also has the ability to bypass the shutdown function of a differential pressure monitor (DPM) at each of the said at least one enclosures by the use of a manual or logic (PLC) switch.

In another preferred embodiment, the operator controller console also has the ability to bypass the shutdown function of a differential pressure monitor (DPM) at each of the said at least one enclosures by the use of a manual or logic (PLC) switch and an automatic, temporary bypass program.

In another preferred embodiment, there is provided devices for powering the components of the shutdown controller and the enclosure controllers, via solar power.

In another preferred embodiment, the hot work is selected from welding, cutting, and grinding.

In another preferred embodiment, the facility is a petroleum drilling platform, a petroleum production platform, a jack-up rig, a pumping station, a petroleum refinery, a tank farm, a chemical plant, an ocean going tanker, or a section of a pipeline.

BRIEF DESCRIPTION OF THE FIGURES

FIG. **1** hereof is schematic representation of one preferred embodiment of the monitored enclosure system of the present invention showing three enclosures that can be simultaneously and independently monitored and controlled. This schematic shows the use of both a wireless gas detection system and some hard wired gas detection monitors used to implement an automatic blower control concept, a control system; which uses software programmed controllers and further utilizes an operator controller console; which uses a display device and for controlling some predetermined control functions. Data from the operator controller console is transmitted to a remote control console via a communications satellite link.

FIG. **2** hereof is a schematic representation of another preferred embodiment of the monitored enclosure system of the present invention also showing three enclosures capable of being simultaneously and independently monitored and controlled. This system utilizes most of the components of the enclosure system of FIG. **1** with the following exceptions and additions: the use of only a wireless gas detection system wherein the components of the gas detection controller console have been integrated into the operator controller console serving as a system console. This gas detection system allows for the implementation of the automatic blower control concept with an all wireless system. This figure also shows the integration of a camera and sensor module inside of the enclosure controllers. The camera is used for viewing the hot work being performed inside the enclosure and the sensor module for taking readings of variables such as temperature and humidity inside of the controllers. Another feature represented by this FIG. **2** is the use of a temperature probe and a temperature detector. The temperature probe is for monitoring the ambient temperature inside of the enclosure and the temperature detector is used to detect the temperature of an object being worked on inside the enclosure. Furthermore a "fire-eye," or arc sensitive switch is incorporated in part of the implementation of an automatic DPM bypass concept wherein the DPM will have a timed automatic bypass feature unless there is hot work being performed inside of the enclosure.

FIG. **3** hereof is a schematic representation of another preferred embodiment of the monitored enclosure system of the present invention also showing three enclosures capable of being simultaneously and independently monitored and controlled. This system utilizes components of the enclosure system of FIG. **1** hereof with some additional components added into the operator controller console, shutdown controller and enclosure controllers, for implementing wireless communication between all the controllers in the system. The use of a plurality of remote antenna boxes is also disclosed, as they are needed in providing communication between the controllers in the control system.

FIG. **4** is a diagram representation of one preferred embodiment of a configuration of the enclosure controllers utilized in the system disclosed in FIG. **1**.

FIG. **5** is a diagram representation of one preferred embodiment of a configuration of the enclosure controllers utilized in the system disclosed in FIG. **2**.

FIG. **6** is a diagram representation of one preferred embodiment of a configuration of the enclosure controllers utilized in the system disclosed in FIG. **3**.

FIG. **7** is a diagram representation of one preferred embodiment of a configuration of the enclosure controllers utilized in the system disclosed in FIG. **4**.

DETAILED DESCRIPTION OF THE INVENTION

The present invention can be utilized for any type of hot work and at any facility where flammable and/or combustible materials present a safety issue during hot work operations. The term "hot work" as used herein, means any work or operation, which could produce spark, flame or excessive heat resulting in a fire or explosion in the presence of combustible or flammable materials. Non-limiting examples of the types of hot work that can be conducted in the enclosures of the present invention include all types of welding, such as gas welding, electric arc welding and cutting, including gas tungsten arch welding (GTAW), gas shielding metal arch welding (GMAW), friction welding, laser welding, cutting such as with a torch or plasma cutter and cutting, brazing, soldering, and grinding with electric and pneumatic tools. Also included, is working in electrical panels while they are still energized in a location of the said facility considered to be classified, in reference to the presence of flammable or combustible materials, by a facility area classification drawing.

The present invention can be practiced at any type of facility where hot work is to be done in the vicinity of flammable or combustible material. Non-limiting examples of facilities where the instant invention can be practiced include petroleum drilling and production platforms, including jack-up rigs; pumping stations; petroleum refineries; chemical plants; tank farms where flammable or combustible materials are stored; and tankers and pipelines used for transporting flammable or combustible materials. As previously mentioned, governmental regulations are strict with respect to performing hot work at such facilities. In the past, at least a portion of such a facility would have to be shutdown prior to performing any hot work operation.

Practice of the present invention allows for safe and efficient hot work to be performed in the vicinity of flammable and combustible materials. At least one enclosure, also sometimes referred to herein as a habitat, is built around the object or objects to be hot worked. The enclosure is of temporary construction comprised of enclosing walls, ceiling extending between the walls and floor extending between the walls, thereby defining a chamber. It can take any shape depending on the object or objects to be hot worked and the particular site limitations at which it is to be built. Any material suitable for constructing such an enclosure can be used. Non-limiting examples of suitable construction materials include metals, ceramics, wood, and composite materials such as fiberglass and carbon fiber reinforced polymeric materials. Fire retardant wood is preferred, more preferably plywood, for the combination of safety, cost and convenience purposes. Scaffolding, if needed, can be provided to support at least a portion of each enclosure, particularly if the enclosure needs to be positioned lateral to a production or drilling platform. The enclosure will be large enough to allow a predetermined number of workers to comfortably work inside the enclosure with all necessary tools, hot work equipment and monitoring and safety devices. At least two workers will typically be in a single enclosure. If only two workers are provided, one worker will be the one performing the hot work and the other worker will typically be on fire watch for observing the hot work. Workers inside of the enclosure will have the capability of verbally communicating with the operator and workers outside of the enclosure by use of conventional means, preferably by two-way wireless radio.

Each enclosure will contain at least one door that preferably opens to the outside of the enclosure. The door will be one that can be easily opened from both the inside and outside of the enclosure and built in a break-away fashion, in case of an emergency. At least one shatterproof viewing window will be present on either the door or on one or more walls for observing activity within the enclosure. Shatterproof windows are well known in the art and are typically manufactured as laminated glass with an inner layer of transparent plastic material. All plastic viewing windows can also be used for the instant enclosure. The floor of each enclosure will preferably be lined with a suitable material capable of withstanding temperatures up to about 3000° F., preferably up to about 3500° F. Such a floor will preferably be comprised of a bottom layer of fire retardant plywood covered with a refractory cloth material. The cloth material, which will typically be supplied in rolls of ⅛ to ¼ inch thickness, is of the type marketed by Thermostatic Industries Inc. of Huntington Beach, Calif., under the trade-name Panther Felt. Such a material is comprised of a refractory fiber, such as fiberglass or a ceramic fiber such as aluminosilicate or aluminoborosilicate. On top of the cloth layer will preferably be a relatively thin malleable layer of sheet metal material, preferably a stainless steel, to safely contain slag or sparks generated from the hot work operation. The floor will also preferably contain side plates (not shown) around the periphery of the floor to help contain sparks and slag. The side plates will typically be several inches to about a foot off the floor.

Each enclosure will also contain at least one inlet port to allow a suitable amount of air to be conducted into the enclosure by use of a blower, preferably an electrically operated blower. At least one air outlet port will also be provided. It is preferred that each air outlet port contain a spark resistant grill or filter to substantially reduce the potential of sparks being carried from inside of the enclosure to the outside where flammable or combustible materials may be present. Another preferred way of minimizing the risk of sparks and slag from exiting the enclosure at a high temperature is to provide a metal ventilation duct system (not shown). Such a system will be of sufficient length leading to the spark resistant filter so that any sparks or slag entering the ventilation system in the enclosure will cool to a safe temperature if they should ever reach the filter, and get through to the outside atmosphere.

Each enclosure, while in use, will be under a positive pressure to provide fresh air to workers inside the enclosure and to prevent gases from outside the enclosure from entering the interior of the enclosure. The pressure of each enclosure is monitored by a suitable differential pressure monitor (DPM), which is preferably an integral component of the enclosure controller. The present invention provides for the monitoring and control of multiple enclosures by a single operator using a single monitoring system and a single control system wherein multiple enclosures can be individually or all can be simultaneously shutdown, or certain equipment can be selectively bypassed if one or more predetermined events occur. Of course only a single enclosure can be monitored and controlled by the practice of the present invention.

It will be understood that each enclosure will also have an enclosure controller represented in FIGS. 4-7 hereof. The enclosure controller will be an integral unit containing such things as: a) a differential pressure monitor (DPM); b) at least one control device preferably a programmable logic controller; c) an audible alarm; d) a visual alarm; e) a backup battery system; f) a manual shutdown switch; g) a camera module; h) a component sensor module; i) a radio transceiver; and j) a remote control panel, preferably of the touch screen type. A basic enclosure controller will contain a DPM, at least the one control device, an audible alarm, and a visual alarm. The next more complex enclosure controller can contain manual shut-

down switch and/or a backup battery. The enclosure controller(s) for an all wireless system would also include a radio transceiver.

It will also be understood that each enclosure will also have a conventional explosion proof lighting system supported by a backup battery system, so that lighting inside each enclosure will continue to function during an emergency shutdown. A conduit sealing system will also be used to create a proper seal for sealing any spaces around cables, hoses, and pipes entering an enclosure from the outside.

The present invention will be better understood with reference to the figures hereof. FIG. **1** is a simplified schematic of one preferred embodiment of the present invention showing three enclosures systems wherein welding is the hot work to be performed in any one or more of the enclosures. All three enclosures are managed by a single operator using a single monitoring system, preferably a single wireless gas detection monitoring system, and a single control system. FIG. **1** shows three enclosures E1, E2, and E3, each having at least one door D1, D2, and D3, at least one air inlet port IP1, IP2, and IP3, and at least one air outlet port OP1, OP2, and OP3. It is preferred that the door open outward and that it be a breakaway door. That is, a door constructed in such a way that in the event of an emergency a single worker of average strength could exert enough force so that the door breaks away from its support means and provides the worker with a means of escape.

In one embodiment the one or more of doors D1, D2, and D3 is provided with a safety door switch similar to those sold under the name Omron with the designation D4DS, D4BS and D4BL Series. Such a switch will indicate whether or not the door is open or closed, typically by use of a spring loaded pin that will be pushed in and in contact with a set of contacts when the door is closed. This will allow voltage to pass through the switch giving the operator an indication that the door is closed. Such a switch can be programmed in one or several ways. For example, it can be programmed in conjunction with a "fire-eye" or arc sensitive switch so that if hot work is being performed inside the enclosure when the door was accidentally opened, the system would automatically shut down. The switch can also be programmed so that if no hot work was being performed when the door was opened a timing circuit would allow a predetermined amount of time to pass for the door to be closed before shutting down the system. If the door were shut in this predetermined amount of time the system would not shut down.

At least one shatterproof viewing window VW1, VW2, and VW3, will also be provided for each enclosure for observing workers inside the enclosure. The three enclosures are also in communication with appropriate hot work equipment, such as welding machines and generators WG1, WG2, and WG3, and associated gas tanks T1-T6. The gas tanks will typically contain welding gases such as oxygen and acetylene. Each tank is equipped with, respectively, a shutdown valve V1-V6, which is activated in case of an emergency shutdown by receiving a shutdown signal from the shutdown controller **3**. Valves V1-V6 will preferably be conventional solenoid valves readily available in the art. Further, each enclosure is provided with at least one remote manual emergency shutdown switch RSD1, RSD2, and RSD3. There is also a manual shutdown switch integrated in at least one of the enclosure controllers EC1, EC2, and EC3 and also for the operator monitoring the operator controller console **1**.

It is within the scope of this invention that pneumatic tools be used in one or more of the enclosures. Such tools will require an air compressor AC1 and associated equipment for running the pneumatic tools, such as volume tank VT1 and blow-down valve **6**. The blow-down valve **6** provides for the sudden bleeding of compressed air from the compressed air system in case of an emergency to prevent damage to such things as compressor seals. It also serves to immediately stop the operation of pneumatic tools in case of an emergency shutdown.

There is also a blower, B1, B2, and B3 associated with the inlet port of each enclosure for providing fresh air to the workers inside the enclosure, as well as for providing a positive pressure differential inside the enclosure. Although the blowers can be operated electrically or by use of compressed air, it is preferred that the blowers be electric blowers. Air is provided from the blowers to the inlet ports via any suitable hose or ducting C1, C2, and C3. It will be understood that the temperature inside of each enclosure can be controlled to some degree by providing either cool air or heated air into the blower intake. Cooled or heated air can be provided by any suitable means, such as by the use of a conventional heat exchange unit at the intake of the blower. It is preferred that each blower have associated therewith its own independent control device BC1, BC2, and BC3 each of which contains a shutdown relay SDR in communication with said shutdown controller **3** but which can be bypassed by the operator at the operator controller console. That is, if the emergency shutdown is not triggered by the gas detection monitors 4B1, 4B2, and 4B3, at the intake of the blowers, then the blowers can be made to continue to operate for the safety of the workers inside the enclosure. It is preferred that each enclosure controller have associated therewith a power controller for controlling power to receptacles associated with each enclosure. The power controller will cut power to the receptacles in the case of a shutdown disabling all power tools used in and around the enclosure. Each power controller, as well as each blower control device will preferably contain a shutdown relay that is capable of shutting down power in response to a shutdown signal relayed to it.

As previously mentioned, each enclosure will also preferably have its own independently operated enclosure controller EC1, EC2, and EC3. This controller is a multifunctional unit containing: a) at least one control device, preferably one, of the said at least one, being a programmable logic control device CT; b) an audible alarm AH; c) a visual alarm AL; d) a differential pressure monitor DPM; and e) a manual shutdown switch SD. The enclosure controller will typically be a sealed box of a suitable material containing the predetermined components. The enclosure controller box will contain a door that will preferably be fitted with a tamper switch that will trigger an audible or visual alarm should the door be opened. Non-limiting examples of enclosure controllers used in the practice of the present invention are shown in FIGS. **4**, **5**, **6** and **7** hereof.

In a preferred embodiment, the enclosure controller will also contain one or more of the following items selected from: a) a manual emergency shutdown switch SD; b) a back-up battery system BB; c) a camera module CM; d) a component sensor module SM; e) a power converter supply PS; f) a radio transceiver RT, used for wireless communication; or g) a remote control panel RCP, touch screen application. The component sensor module SM will be capable of sensing one or more variables inside of the enclosure controller. Such variables include temperature, humidity, air flow, and sound. It is more preferred that at least the temperature and humidity be monitored. The enclosure controller can also contain a voltage meter capable of indicating the state of the batteries, which voltage can be communicated to the operator controller console.

In another preferred embodiment, the DPM contained in the enclosure controller will be an integral device containing: a) a differential pressure switch; b) a gauge, for a manual readout of the current differential pressure reading; and c) a transmitter for sending a signal to the programmable control device CT for a readout of the current differential pressure reading via a display device.

One type of differential pressure monitor that can be used in the practice of the present invention is the Explosion Proof Differential Switch, such as the Model 1950, manufactured by Dwyer Instruments, Inc., of Michigan City, Ind. The interior of the enclosure is at a higher pressure than the pressure outside of the enclosure to prevent flammable or combustible gases from entering the enclosure during hot work operation. If the pressure inside the enclosure drops to substantially the pressure outside of the enclosure, a signal is sent to the shutdown controller **3**, which sends the appropriate shutdown signal to all welding equipment, including tank valves, welding machines, etc. There will be times when workers need to enter or exit the enclosure during normal and safe working conditions and unless the DPM(s) can be bypassed, an emergency shutdown will occur anytime if the pressure in the enclosure drops to a level that would be substantially equal to the pressure outside the enclosure. Thus, a worker wishing to enter or exit an enclosure would communicate with the operator, who would deactivate the DPM for that enclosure until the worker has safely entered or exited the enclosure, upon which it is reactivated. It is within the scope of this invention that each enclosure be provided with a device wherein a worker desiring to enter to exit an enclosure would know the status of the hot work taking place within the enclosure. That worker can then activate a switch that would by pass the DPM and allow the door to be opened without causing a system shutdown and would allow the worker a predetermined amount of time to enter or exit the enclosure.

The three enclosures **E1**, **E2**, and **E3**, can all simultaneously and independently be monitored and controlled by an operator monitoring the operator controller console **1**, which is the central control center for all enclosures **E1**, **E2** and **E3**. The operator controller is in wireless communication, preferably radio communication, with a remote location **11** which is also a controller similar to the operator controller. It is preferred that the radio communication be achieved via a satellite link SL via a communications satellite SAT. This will enable an operator at the remote location, which will typically be a land based central operation center capable of monitoring and controlling multiple enclosures and multiple location around the world. The central location controller can be used to provide advice or take over the entire enclosure operations during an emergency. The central location controller can also be used to provide software patches and software updates simultaneously at multiple locations around the world. The radio communication system can also be used to allow a client, such as a major oil company, to monitor the hot work being performed on its platform.

It will be understood that the three enclosures are shown in the figures hereof for illustrative purposes only. The present invention can be practiced for only one enclosure or for any number of enclosures, and all enclosures can be independently and simultaneously monitored and controlled. Of course, practical considerations, such as construction time, number of workers required, and space limitations will dictate the maximum number of enclosures that can practically be built and simultaneously operated at any given facility. The operator controller console **1** will contain: a) a suitable means of power, preferably a conventional AC-DC power converter (not shown); b) at least one control device, one of those control devices preferably being a programmable logic controller (PLC). Other non-limiting examples of typical control devices that can be used in the practice of the present invention include: electrical relays, solenoids, switches, circuit breakers and fuses; c) a suitable means for monitoring the status of any one or more enclosures and performing certain predetermined control functions, such as: i) automatically and manually by-passing a differential pressure monitor (DPM) at each of the enclosures; ii) displaying the status of devices being used in the system; iii) providing scaled readings of particular devices in the system; and iv) performing control functions as needed or as programmed; d) a manual emergency shutdown switch that is capable of shutting all of the enclosures simultaneously; and e) an appropriate audible and visual alarm system. It is preferred that the means for monitoring the status of any one or more enclosure be a suitable touch screen application having a graphic display and programmed with suitable software

The operator controller console **1** is integrally connected to a monitoring system. The monitoring system can be any suitable system that will allow communication between the components of the system, preferably the console and the gas detection monitors and preferably wireless communication. The monitoring system is comprised of a gas detection controller console **2**, which preferably contains: a suitable radio modem transceiver; a central processing unit (CPU); a display device; and a plurality of interface cards. Interface cards are well known in the art and are typically a circuit board with the appropriate components to allow communication across boundaries, such as between hardware, or between software and hardware. Interface cards also allow communication between different software languages and codes that an application needs to communicate with each other and with hardware. It is to be understood that the entire gas detection monitoring system could be hardwired, although a wireless system is preferred. The display device is preferably part of a portable computer, more preferably a laptop computer. The gas detection monitors **4** are another component of the monitoring system and are in constant communication with the gas detection controller console **2**, and are strategically placed within and about the enclosures as well as in the vicinity of hot work equipment, blowers and any of the other various equipment associated with the present enclosure system. It is preferred that at least two gas detection monitors be located inside each enclosure, at least one located near the ceiling and at least one near the floor to better cover the entire atmosphere of the enclosure. It is also with in the scope of the present invention to place gas monitors a distance away, preferably at least 10 feet away from the enclosure in such a pattern that substantially 100% of the perimeter of each enclosure is monitored by gas detection monitors. These perimeter gas detection monitors will also be placed in high and low positions so that gases heavier than air are monitored as well as gases lighter than air. A remote antenna box **AB1**, is preferably used for receiving signals (radio frequency) from the plurality of gas detection monitors **4** and carrying them to the gas detection controller console **2**, in the event that it is being used in the interior of a building.

It is within the scope of the present invention that the software used for the gas detection controller console **2** be suitable for labeling each of the plurality of gas detection monitors as to their physical location and being viewable via a display device. This will allow the operator to know immediately what monitor is sending a distress signal which will allow the operator to take immediate appropriate measures at the precise location of distress. For example, if the distress signal is not coming from a gas detection monitor located in

the vicinity of the blower intake, the operator can over ride the blower shutdown function so that the blower continues to conduct fresh air into the enclosure.

As previously mentioned, each gas detection monitor 4 is in communication with the gas detection controller console 2. The gas detection monitors 4 are preferably portable and wireless, making them capable of being carried or worn by workers. Each monitor will be programmed to measure one or more non-limiting variables, such as temperature, combustible gases including those represented in the lower explosive limit (LEL), oxygen, carbon monoxide, and hydrogen sulfide. Although single point gas detection monitors can be employed, it is preferred that multi-point monitors be used. That is, a single point monitor is capable of monitoring the concentration level of only one variable, whereas a multi-point monitor is capable of simultaneously monitoring the concentration of more than one variable and as a part of a wireless system the gas detection monitor will simultaneously communicate information to the transceiver of the gas detection controller console 2, which in turn transmits the signal through a suitable interface means, preferably an electronic interface card, that will translate the data into a protocol suitable for the software in an associated CPU to read, analyze, display, store, and respond thereto. It is preferred that one or more of the gas detection monitors also have the capability of either two-way voice communication or receiving text messages as a part of a network. The gas detection controller console 2 interfaces with the operator controller console 1 by any suitable means, such as also by the use of a suitable electronic interface card. The operator controller console 1 will have the capabilities as previously mentioned, such as showing the status of each enclosure, etc. The CPU of the gas detection controller console will also be capable of sending shutdown signals to the operator controller console 1, which in turn sends the signal to the shutdown controller 3, which signals the targeted equipment to shutdown. The ability of an operator to be able to monitor, on a display device, the concentration of atmospheric variables such as gas levels, temperature, etc., allows the operator to take the proper preemptive action prior to a level of emergency being reached. As previously mentioned, the operator controller console 1 will preferably display the status of the enclosure systems, preferably by the use of a touch screen application. That is, a device that has the capability of being programmed to display the status of devices in the system based on predetermined variables. Any conventional touch screen application may be used although a color screen is preferred for extended alarm range notification through the use of colors for different alarm levels.

An upper concentration level for each atmospheric variable is programmed into the CPU software and if that level is reached, the system will automatically shutdown all targeted hot work equipment at all enclosures via communication with the shutdown controller 3. The shutdown controller 3 is in communication with all systems, devices and equipment of the overall system. For example, upon receiving an emergency shutdown signal from the operator controller console 1 via the gas detection controller console 2, a shutdown signal is sent to valves V1-V6 shutting down all gas delivery to the welding equipment. A shutdown signal is also sent to blower controls BC1 to BC3 as well as to the blow-down valve 6 and welding equipment WG1 to WG3. As previously mentioned, it is within the scope of this invention that blowers B1 to B3 continue to operate if it is determined that an emergency was not caused by the presence of combustible or flammable gases at the gas detection monitor at the intake of the blowers B1-B3. It is also within the scope of this invention that a function be provided that can shutdown all hot work in the case of a facility shutdown. That is, if a production platform, refinery or other facility has a general emergency shutdown, all hot-work will automatically be shutdown as a part of the facility shutdown.

In a preferred embodiment, the use of both a wireless gas detection system and some hard wired gas monitors, is used for implementing the automatic blower control concept.

Other preferred embodiments are represented in FIGS. 2 to 4 hereof. The components of the gas detection controller console are integrated into the operator controller console, becoming a system console, and a portable computer is used as a display device, labeled as device (2) in these figures.

FIG. 2 hereof represents another preferred embodiment of the present invention. FIG. 2 further shows the use of a temperature probe TP1, TP2, TP3 and a temperature detector TD1, TD2, and TD3 in the inside of the enclosures E1, E2 and E3. The temperature probe is used to take ambient readings of the interior of the enclosure. These readings can be used to warn the operator, sound an alarm and/or initiate a shutdown. The temperature detectors are used to take temperature readings of an object being used in the enclosures E1-E3. These readings can also be used to perform the functions previously described. All of FIG. 2 components that are common to FIG. 1 have the same nomenclature as those of FIG. 1 hereof. FIG. 2 hereof also shows more hardwired connections because of the addition of a camera module and a component sensor module as part of the enclosure controller. It is preferred in some instances that these two modules be hardwired to the shutdown console and controller console.

FIG. 3 which shows an all wireless monitoring system, represents another preferred embodiment of the present invention. FIG. 4 further shows the use of a plurality of additional remote antenna boxes AB2-AB6. The remote antenna boxes are used for wireless communication between the controllers being used in the operator controller console 1, the shutdown controller 3 and the enclosure controllers EC1, EC2, and EC3. All of FIG. 3 components that are common to FIG. 3 have the same nomenclature as those of FIG. 2 hereof.

FIG. 4 hereof represents another preferred embodiment of the present invention which is substantial all wireless system. FIG. 4 further shows the use of a plurality of remote control panels RCP1, RCP2, RCP3, and RCP4. These remote control panels are a touch screen application, which can be integrated into the shutdown and enclosure controllers or used remotely from the controllers, i.e. outside of the enclosures E1, E2 and E3 for controlling and viewing certain predetermined functions of the control system. FIG. 4 further discloses the use of an alternate power source for the shutdown and enclosure controllers. This alternate power source is preferably in the form of a solar panel SP1, SP2, SP3, and SP4; these devices can be used in lieu of a conventional AC-DC power converter supply. All of FIG. 4 components that are common to FIG. 3 hereof have the same nomenclature as those of FIG. 3 hereof.

FIG. 5 is a diagram representation of a preferred embodiment of the enclosure controller of the enclosure system represented in FIG. 1 hereof. This controller would be used in the inside of the enclosures E1, E2 and E3. It contains the following components listed: the audible alarm AH, the visual alarm AL, the controller CT, the manual shutdown switch SD, the back-up batteries BB and the differential pressure monitor DPM.

FIG. 6 is a diagram representation of another preferred embodiment of the enclosure controller. It shows the components used in the system represented in FIG. 2 hereof. It contains the following additional components from the controller described in FIG. 5: the camera module CM and the

sensor module SM. All of FIG. 6 components that are common to FIG. 5 have the same nomenclature as those of FIG. 5 hereof.

FIG. 7 is a diagram representation of another preferred embodiment of the enclosure controller and is the enclosure controller if the enclosure system represented in FIG. 3 hereof. It contains the following additional components from the controller described in FIG. 6: the power supply PS and the radio transceiver RT. All of FIG. 7 components that are common to FIG. 6 have the same nomenclature as those of FIG. 6 hereof.

FIG. 8 is a diagram representation of the enclosure controller of the enclosure system represented in FIG. 4 hereof. It contains the following exceptions and additional components from the controller box described in FIG. 7: the power supply PS, has been removed due to the use of the alternate power source or solar panel SP2-SP4 described in FIG. 4, the DPM although still used has been changed to one that also contains a gauge for a visual display of the readings being taken, and a remote control panel for transmitting a signal to the operators controller console touch screen application, for viewing of the current readings. All of FIG. 7 components that are common to FIG. 6 have the same nomenclature as those of FIG. 6 hereof.

What is claimed:

1. An enclosure system comprised of one or more enclosures built about at least one object to be hot worked at a facility wherein flammable or combustible materials are located within a hazardous distance from where the hot work is to be performed, which enclosure system is comprised of:

a) at least one enclosure, each enclosure comprising: i) enclosing walls, ceiling and floor defining a chamber in which the hot work is to be performed; ii) at least one door to allow workers to enter and exit; iii) at least one air inlet port; iv) at least one air outlet port; v) at least one blower having an intake and exhaust, which exhaust is in fluid communication with said at least one air inlet port; vi) a blower control in communication with said at least one blower and to a gas detection monitor at the intake of at least one of said one or more blowers and to a shutdown controller, wherein said blower control has the capability of allowing the blower to continue to operate during an emergency shutdown that is not triggered by a combustible or flammable gas detected at a gas detection monitor located at the intake of said one or more blower; vii) at least one manual emergency shutdown switch inside of said enclosure; and viii) at least one manual emergency shutdown switch outside of, but within the immediate perimeter of, said enclosure;

b) a monitoring system comprised of:

i) a plurality of gas detection monitors located at the predetermined locations inside and outside of each enclosure; wherein each of said gas detection monitors having a means of communication with a gas detection controller console; and

ii) a gas detection controller console comprised of: a) a means capable of receiving data transmitted from the plurality of the gas detection monitors; b) an interface means capable of communicating data from said receiving means of the console to a central processing unit; c) the central processing unit containing software capable of, inter alia, accepting, storing computing, and displaying data received from said plurality of gas detection monitors; d) a display device in communication with said central processing unit and capable of displaying data from said plurality of gas detection monitors; and e) an interface means capable of communicating a signal from said central processing unit to a control system;

c) the control system comprised of:

i) an operator controller console comprised of: a) a source of electrical power for the system; b) at least one control device; c) a means for displaying the status of each enclosure; d) a capability of communicating predetermined bypass and system shutdown signals to a shutdown controller; and e) an audible alarm that will activate when a shutdown occurs;

ii) a shutdown controller capable of sending shutdown signals to one or more enclosure control devices, one or more shutdown control devices, and to various equipment associated with the hot work to be conducted in said one or more enclosures;

iii) an enclosure controller comprised of a differential pressure monitor for monitoring the pressure within the enclosure relative to the pressure outside of the enclosure, a programmable logic control device, an audible alarm and a visual alarm; and

iv) a controller console at a remote location and in radio communication with said operator controller console and shutdown controller, which controller console is capable of performing all the functions of said operator controller console and which is also capable of downloading software said central processing unit and programmable logic control device.

2. The enclosure system of claim 1 wherein the radio communication is provided by a satellite link.

3. The enclosure system of claim 1 wherein the door of each enclosure is a breakaway door that opens outward.

4. The enclosure system of claim 1 wherein each enclosure is provided with an explosion proof interior lighting system.

5. The enclosure system of claim 1 wherein the outlet port of at least one enclosure is provided with a spark resistant filter.

6. The enclosure system of claim 1 wherein the hot work to be performed is welding.

7. The enclosure system of claim 1 wherein the blower of each enclosure is an electrically operated blower.

8. The enclosure system of claim 1 wherein at least two gas detection monitors is located in each enclosure.

* * * * *

US006783054B1

(12) **United States Patent**
Pregeant, Jr. et al.

(10) **Patent No.: US 6,783,054 B1**
(45) **Date of Patent: Aug. 31, 2004**

(54) **SYSTEM FOR CONTROLLABLY CONDUCTING WELDING OPERATIONS ADJACENT FLAMMABLE MATERIALS AND METHOD OF WELDING ADJACENT FLAMMABLE MATERIALS**

(76) Inventors: **Clyde W. Pregeant, Jr.**, 12201 W. Ave. B, Cut Off, LA (US) 70345; **Richard J. Pregeant**, 203 Chateau Dr., Lochport, LA (US) 70374; **Mark A. Pregeant**, 135 W. 145th St., Galliano, LA (US) 70354; **Glenn R. Payton**, 1463 Flamingo Dr., Gretna, LA (US) 70056; **James R. Craig**, 240 Saxony Ct., Belle Chasse, LA (US) 70037

(*) Notice: Subject to any disclaimer, the term of this patent is extended or adjusted under 35 U.S.C. 154(b) by 12 days.

(21) Appl. No.: **10/155,716**

(22) Filed: **May 20, 2002**

(51) **Int. Cl.**[7] **B23K 9/10**; B23K 31/02

(52) **U.S. Cl.** **228/102**; 103/8; 103/119; 219/72; 219/130.01; 454/228

(58) **Field of Search** 228/102, 103, 228/8, 9, 119; 219/72, 130.01, 130.02; 454/49, 56, 228; 52/2.17; 135/900

(56) **References Cited**

U.S. PATENT DOCUMENTS

3,452,764 A		7/1969	Bell	135/1
3,946,571 A		3/1976	Pate et al.	61/69
4,091,719 A	*	5/1978	Galloway	454/253
4,151,396 A	*	4/1979	Veal	219/132
4,297,940 A		11/1981	Hainline	98/33
4,606,260 A	*	8/1986	Cox	454/56
4,767,913 A	*	8/1988	Weber et al.	219/130.21
5,026,219 A		6/1991	Wallace	405/303
5,101,604 A		4/1992	Wardlaw, III	52/2.17
5,410,120 A	*	4/1995	Taylor	219/72
6,540,603 B1	*	4/2003	Koskinen	454/58

* cited by examiner

Primary Examiner—Kiley Stoner
Assistant Examiner—Kevin McHenry
(74) *Attorney, Agent, or Firm*—Baker Donelson

(57) **ABSTRACT**

A system (**10**) for conducting welding adjacent flammable materials (**12**) on a platform (**11**) is disclosed having a chamber (**13**) defining an interior space (**16**). The system also includes a welding apparatus (**48**) operable within the interior space. A sensor (**54**) is provided for sensing the presence of combustible gas within the interior space above a pre-selected level and generating a signal. An exterior sensor (**57**) is provided for sensing the presence of combustible gas outside the interior space above a pre-selected level and generating a signal. A controller (**66**) is in communication with the welding apparatus, the sensor, and the exterior sensor to control the operations of the welding apparatus in response to signals received from the sensor.

18 Claims, 2 Drawing Sheets

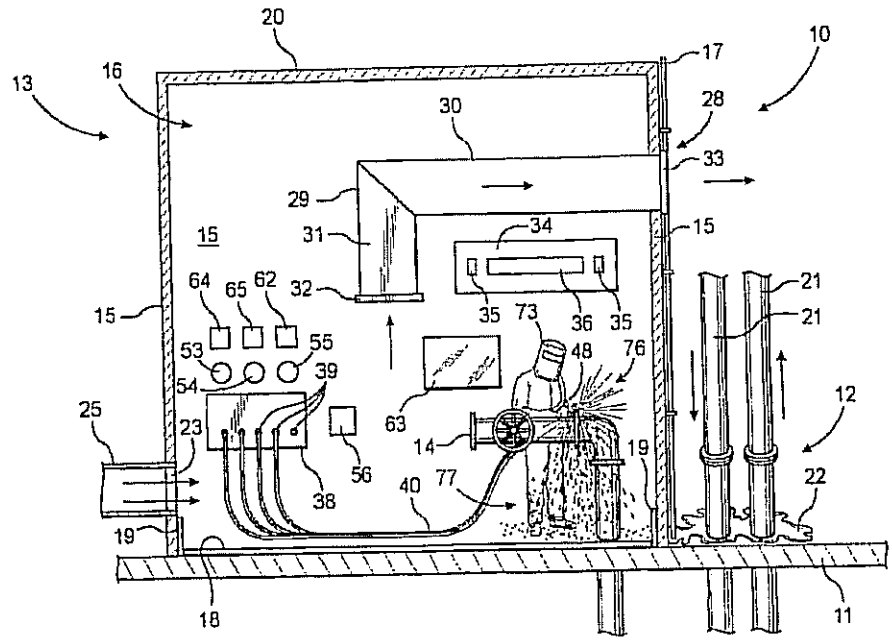

EXHIBIT
D

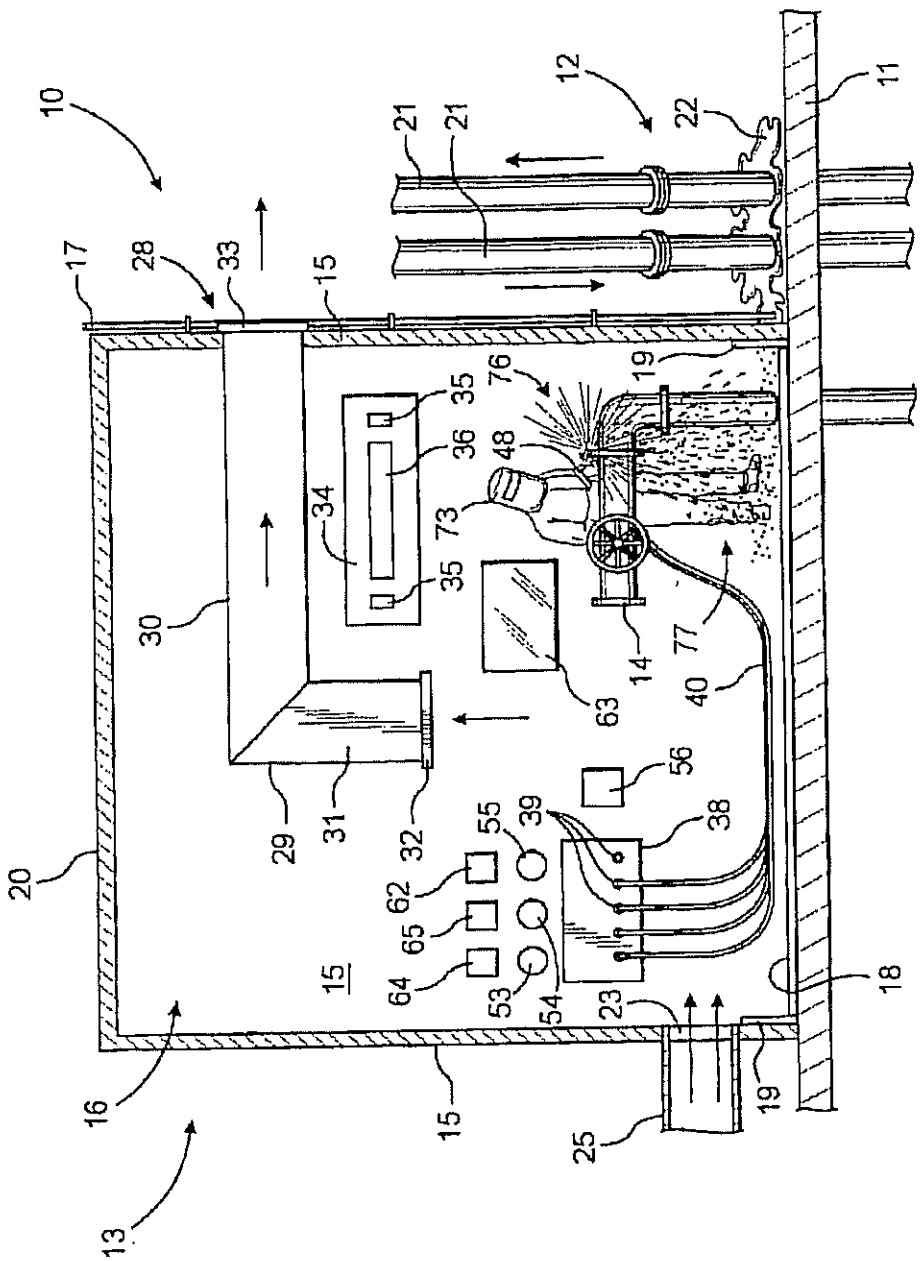
10
12
11
21
21
22
17
28
33
15
19
76
35
36
48
34
73
35
30
14
77
40
63
56
29
31
32
55
39
38
20
62
65
64
53
54
23
18
16
15
19
25
13

FIG. 1

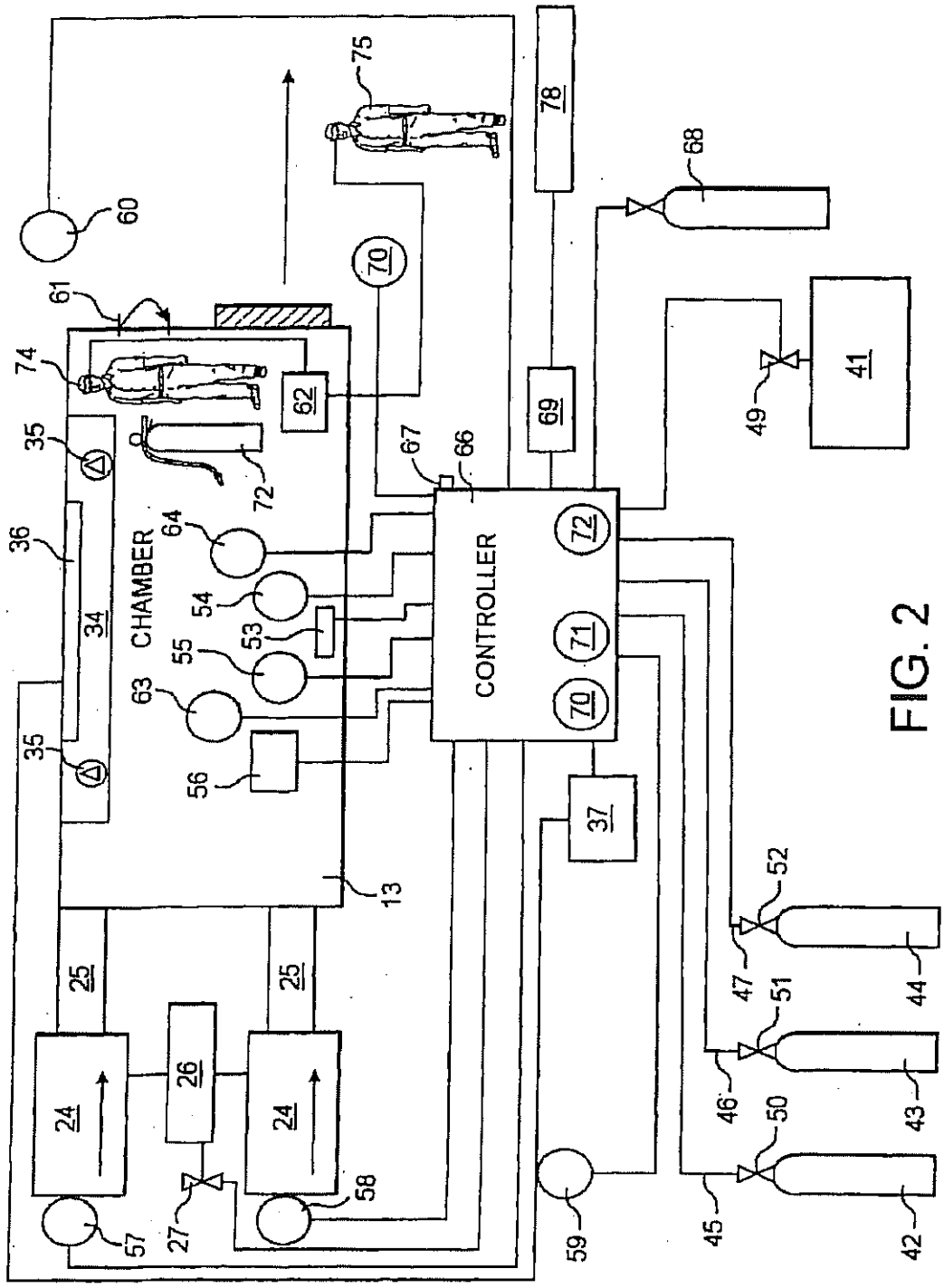
CHAMBER
CONTROLLER
60
61
74
35
36
34
35
62
72
64
54
53
55
63
56
13
25
25
24
26
24
57
27
58
75
78
70
67
66
69
68
41
49
72
71
70
37
59
52
47
44
51
46
43
50
45
42

FIG. 2

SYSTEM FOR CONTROLLABLY CONDUCTING WELDING OPERATIONS ADJACENT FLAMMABLE MATERIALS AND METHOD OF WELDING ADJACENT FLAMMABLE MATERIALS

TECHNICAL FIELD

This invention relates generally to systems for controlling industrial environments, and particularly to systems for controlling welding environments adjacent flammable materials and methods for concurrently conducting welding and drilling operations adjacent one another.

BACKGROUND OF INVENTION

Drilling facilities, such as offshore platforms, are commonly constructed and maintained in remote areas of the world for use in drilling petroleum from the subterranean. Oftentimes, such drilling facilities are subjected to rigorous use as well as harsh weather conditions. Pipelines, drilling equipment, storage tanks, and decking on such facilities are routinely in need of repairs which require welding and cutting to be conducted.

In performing welding, intense heat is used to melt metals together and cause them to become integrally joined when cooled. A welding torch fueled by gas or a TIG (Tungsten Inert Gas) torch powered by a diesel or electric welding machine directs the intense heat to engage the subject metals. The force of the intense heat from a welding torch combined with the melting of metals generates sparks and slag that spray outwardly and fall downwardly from the subject metals that are being welded.

Conducting welding on petroleum drilling facilities is particularly dangerous due to the proximity of heat, sparks and slag to petroleum liquids and gases, which are flammable. Although petroleum is contained within pipelines or storage tanks, petroleum is often spilled or sprayed accidentally about a well or a drilling platform, for example, as a result of blow-out, breaches in seals, or similar conditions.

In addition to petroleum, other dangerously flammable materials exist on drilling facilities. For example, much of the heavy equipment used on a drilling platform, such as cranes, forklifts, and the like, are powered by gasoline, diesel or other fuels containing hydrocarbons that are flammable. In addition to the fuel tanks installed in such equipment, other containers for storing such fuels are often maintained on the drilling platform for re-fueling purposes.

Some safeguards have been taken to reduce the danger of igniting flammable materials on offshore platforms during welding operations. For example, drilling on offshore platforms is often ceased while welding is performed to reduce the risk of heat, sparks or slag inadvertently igniting petroleum that is being collected, processed and stored. Such cessations in drilling operations on a platform are known in the art as "shut-ins". Shut-ins are intended to prevent petroleum from flowing near welding operations. However, each shut-in may cost hundreds of thousands of dollars in lost production depending upon the duration of the shut-in.

Another safeguard that has been undertaken prior to performing welding on drilling platforms is that flammable materials within containers and equipment have been isolated from the area in which welding is to be performed. Preferably, welding operations are secluded to an open space separated from pipe lines and storage containers containing petroleum as well as equipment containing flammable fuel

by a distance of at least 35 feet. However, on a drilling platform, such open and secluded space is often unavailable. Occasionally, petroleum can be re-routed or otherwise moved to another location to prepare an open and secluded area for welding. However, given the limited space on offshore petroleum platforms, welding operations are commonly required to be conducted within a few feet of petroleum or other flammable materials and therefore a shut-in must be instituted.

As shown in U.S. Pat. Nos. 3,452,764 and 5,101,604, tent-like shelters have been erected about pipelines and wellheads in an effort to protect welders from inclement weather. None of these shelters however, provide for conducting welding directly adjacent flammable materials, or conducting welding on surfaces other than horizontal surfaces. Additionally, capsules, such as those shown in U.S. Pat. Nos. 3,946,571 and 5,026,219, have been made portable and have provided ventilation for welders. While such prior art capsules disclose the provision of some ventilation for welders, none of the systems associated therewith disclose controls sufficient to minimize the dangers of igniting flammable liquids and gases located adjacent welding operations so that welding and drilling operations may be performed simultaneously and adjacent one another.

It is thus seen that a need exists for a system for conducting welding adjacent flammable materials, such as petroleum and other fuels and gases, in a safe and efficient manner without shutting down drilling operations. It is to the provision of such that the present invention is particularly directed.

SUMMARY OF THE INVENTION

In a preferred form of the invention, a system for conducting welding adjacent flammable materials on a platform comprises a chamber defining an interior space. A welding apparatus is operable within the interior space. A sensor is provided for sensing combustible gas in the interior space and generating a signal. A controller is in communication with the welding apparatus and the sensor controlling the operations of the welding apparatus in response to signals received from the sensor.

In another preferred form of the invention, a method for controllably conducting welding adjacent flammable materials on a drilling platform comprises the steps of building a chamber about an object on the platform to be welded in order to separate the object from adjacent flammable materials and to create a substantially sealed environment about the object, blowing air into the chamber to create a positive pressure within the chamber that inhibits combustible gases from entering the chamber, operating a welding torch within the chamber to repair the object while sensing inside the chamber for the presence of combustible gas above a pre-selected level, and ceasing the welding operations upon the sensing detecting combustible gas inside the chamber above the pre-selected level.

BRIEF DESCRIPTION OF THE DRAWINGS

FIG. 1 is a perspective partial cross-sectional view of a system for conducting welding on a drilling platform adjacent flammable materials.

FIG. 2 is a schematic view of the system illustrated in FIG. 1.

DETAILED DESCRIPTION OF THE DRAWINGS

FIG. 1 is a perspective partial cross-sectional view of a system 10 for conducting welding on a drilling platform 11

adjacent flammable materials **12**. The system **10** includes a chamber **13** erected about an object **14**, such as a broken pipe, to be welded. The chamber **13** has a plurality of sides **15** that surround the object **14** and define an interior space **16**. A floor **18** extends between the sides **15**. A ceiling **20** extends between the sides **15** opposite the floor **18**.

The sides **15** are preferably comprised of sheets of plywood mounted to a frame of wooden boards. The plywood and boards are fire-resistant, preferably treated by pressure impregnation with a fire-resistant treatment, such as Pyro-Guard®. Scaffolding framework **17** mounts to a deck of the platform **11** adjacent the chamber **13**. The scaffolding **17** includes a series of interlocking metal pipes that preferably form a support frame that flanks the sides **15** of the chamber **13**.

The floor **18** is preferably comprised of a sheet of ⅛" aluminum supported upon the platform **11**. A side plate **19** attaches to a lower portion of each side **15**. Each side plate **19** abuts the peripheral edges of the floor **18**. The side plates **19** are also preferably comprised of aluminum sheets at least ⅛" thick and 6" high. The ceiling **20** is comprised of fire-resistant plywood and framing boards similar to the sides **15** of the chamber **13**.

The chamber **13** may be constructed adjacent pipes **21**, which contain petroleum that is flowing between different levels of the platform **11**. The sides **15**, the floor **18** and the ceiling **20** of the chamber **13** may contain cut-outs or holes as needed to allow the passage of the object **14** into the interior space **16**, such that the chamber may be constructed about existing piping, wells and other objects. The chamber **13** may also be constructed adjacent petroleum **22** that has been spilt upon the platform **11**.

A pair of first openings **23** are provided in one of the sides **15**. A pair of blowers **24**, shown in FIG. **2**, attach to the chamber **13** adjacent the first openings **23** through a pair of flexible ducts **25**. Each of the blowers **24** is in fluid communication with the interior space **16**. The blowers **24** are preferably portable air driven blowers, such as an Allegro Industries Model No. 9508. Each of the blowers **24** has an intake manifold that is coupled to an air compressor **26**. In this preferred configuration, each blower **24** supplies compressed air from the air compressor **26** to the interior space **16** of the chamber **13** at a rate of approximately 1800 CFM. A blower shutoff valve **27** couples to the air compressor **26**. The blower shutoff valve **27** is a solenoid valve operable upon receiving an electrical signal, such as a Model No. 4262-A072 Air Intake Shutoff Valve sold by AMOT Controls Corporation.

A second opening **28** is provided in one of the sides **15** of the chamber **13**. A ventilation duct **29** attaches to the chamber **13** adjacent the second opening **28**. The ventilation duct **29** has a lateral extension **30** and a downward extension **31** extending downwardly from the lateral extension **30** to a central portion of the chamber **13**. A grill **32** attaches to the open end of the downward extension **31**. A set of framed, spring-loaded louvers **33** attach to the ventilation duct **29** opposite the grill **32**.

An electrical panel **34** coupled to a 120 Volt AC power supply attaches to a side **15** of the chamber **13**. Electrical power outlets **35** and lights **36** are electrically connected to the electrical panel **34** for supplying power and lighting to the interior space **16**. A power switch **37** couples to the electrical panel **34** to control the flow of electricity to the electric panel.

A welding panel **38** attaches to a side **15** of the chamber **13**. The welding panel **38** is preferably a junction box defining a plurality of holes **39** extending through the side **15** of the chamber **13** to which the welding panel is attached. A plurality of welding leads **40** attach to the welding panel **38** through the holes **39**. The welding leads **40** are hoses or supply lines that are connected to a welding machine **41** and several gas tanks **42**, **43** and **44**. The welding machine **41** is a conventional diesel welding machine capable of performing welding, burning and cutting operations. The tanks **42**, **43** and **44** hold gases such as argon, acetylene and oxygen that are used in conducting welding, burning and cutting operations. A welding torch **48** couples to each of the welding leads **40** opposite the panel **38**. A welding machine shutoff valve **49** couples to the welding machine **41**. The welding machine shutoff valve **49** is a solenoid valve operable upon receiving an electrical signal from a controller **66** that is described in detail below. The welding machine shutoff valve **49** is preferably similar to the blower shutoff valve **27** described above.

Each of the tanks **42**, **43** and **44** has an associated tank shutoff valve **50**, **51** and **52** and an associated supply line **45**, **46** and **47** respectively. The supply lines **45**, **46** and **47** connect to the welding torch **48**. Each of the tank shutoff valves **50**, **51** and **52** controls the flow of gas from the tanks **42**, **43** and **44** to their respective supply lines **45**,**46** and **47**. Each of the tank valves **42**, **43** and **44** is preferably a conventional solenoid valve, such as a Model No. 8223G10 sold by ASCO of Florham Park, N.J. Each of the tank valves **42**, **43** and **44** operates to shutoff a respective gas supply line **45**, **46** and **47** upon receiving an electrical signal from the controller **66**.

A pressure sensor **53** mounts to the side **15** of the chamber **13** and couples to the controller **66**. The pressure sensor **53** senses changes in air pressure in the interior space **16** of the chamber **13** and generates an electrical signal to the controller **66** upon detecting a change in pressure below a pre-selected level of pressure. The pre-selected level of pressure may be ambient pressure. The pressure sensor **53** is preferably an Explosion Proof Differential Pressure Switch, such as Model 1950, supplied by Dwyer Instruments, Inc. of Michigan City, Ind.

A gas detector **54** mounts to the side **15** of the chamber **13** and couples to the controller **66**. The gas detector **54** monitors the interior space **16** of the chamber **13** for combustible gases and vapors, and upon detection of combustible gases or vapors above a pre-selected level, generates an electrical signal to the controller **66**. The gas detector **54** has an explosion proof housing and a digital display. The gas detector **54** is preferably a Model S104-300-101-201 Smart Sensor gas detector supplied by General Monitors of Lake Forest, Calif. The gas detector **54** preferably couples to an amplifier, such as a Model TA102A Single-Channel Combustible Gas Trip Amplifier Module sold by General Monitors, that amplifies the electrical signal generated by the gas detector **54** prior to sending the signal to the controller **66**.

An oxygen detector **55** mounts to the side of the chamber **13** and couples to the controller **66**. The oxygen detector **55** detects oxygen in the interior space **16** of the chamber **13** and generates a signal upon detection of oxygen below a pre-selected level. The oxygen detector **55** is preferably a Model TS420 Oxygen Deficiency Detector sold by General Monitors and includes a field mounted display, such as an FMD 321-106-110, that provides an LCD readout of sensed oxygen.

An interior manual switch **56** mounts to a side **15** of the chamber **13**. The interior manual switch **56** is preferably an

explosion proof, mushroom shaped button switch that generates an electrical signal to the controller **66** upon being depressed.

A plurality of exterior gas detectors **57**, **58**, **59** and **60** mount to the platform **11** outside the chamber **13** and couple to the controller **66**. The exterior gas detectors **57** and **58** are mounted adjacent the blowers **24**. The exterior gas detector **59** is mounted adjacent the gas tanks **42**, **43** and **44**. The exterior gas detector **60** is mounted adjacent a doorway **61** to the chamber **13**. The exterior gas detectors **57**, **58**, **59** and **60** are preferably similar to in type, style and operation to the interior gas detector **54**.

The pressure sensor **53**, the gas detectors **54**, **57**, **58**, **59** and **60**, the oxygen detector **55** and the interior manual switch **56** couple to a power supply module such as a Model PS002 Power Supply Module sold by General Monitors that generates 24 Volt DC power. A communications link **62** mounts to the chamber **13** for establishing audio communications between the interior **16** and exterior of the chamber. The communications link **62** is preferably a conventional intercom or a 2-way radio. A window **63** extends through the side **15** of the chamber **13** to enable visual communications between the interior **16** and exterior of the chamber. An interior audio alarm **64** and an interior visual alarm **65** mount to the chamber **13** and couple to the controller **66**.

The controller **66**, shown in. FIG. **2**, mounts to the platform **11** outside the chamber **13**. The controller **66** includes an electrical distribution panel housed within a protected, sealed enclosure, preferably of the type provided by Bebco Industries of Texas City, Tex. The enclosure defines a cavity about its electrical distribution panel. The controller **66** is in electrical communication with the pressure sensor **53**, the interior gas detector **54**, the interior manual switch **56**, the oxygen detector **55**, and the exterior gas detectors **57**, **58**, **59** and **60**. The controller is also in electrical communication with the blower shutoff valve **27**, the electric panel power switch **37**, the welding machine shutoff valve **49**, and the tank shutoff valves **50**, **51** and **52**. Such electrical communication, for example, between the controller **66** and the pressure sensor **53**, the interior gas detector **54**, the interior manual switch **56**, the oxygen detector **55**, the exterior gas detectors **57**, **58**, **59** and **60**, the blower shutoff valve **27**, the electric panel power switch **37**, the welding machine shutoff valve **49**, and the tank shutoff valves **50**, **51** and **52**, may be established by wire or wireless connections.

An exterior control switch **67** mounts to the exterior of the controller **66** and is in electrical communication with the controller **66**. The exterior control switch **67** is also electrically connected to the blower shutoff valve **27**, the electric panel power switch **37**, the welding machine shutoff valve **49**, and the tank shutoff valves **50**, **51** and **52**. A pressurizing gas tank **68** attaches to the controller **66** and is in fluid communication with the cavity of the controller **66** that surrounds the electric distribution panel. The pressurizing tank **68** holds an inert shielding gas, such as argon or nitrogen, for purging the cavity of the controller **66**.

The platform **11** has an electrical power source **78** for powering equipment, lighting, and HVAC used on the platform. An emergency shut down switch **69** is in electrical communication with the electrical power source **78** and the controller **66**. An exterior visual alarm **70** and an exterior audio alarm **71** mount adjacent the controller **66**. The exterior visual alarm **70** is preferably a strobe light or similar warning light. The exterior audio alarm **71** is preferably a siren or similar warning horn. The exterior visual alarm **70** and the exterior audio alarm **71** electrically couple to the controller **66**. A fire extinguisher **72** is placed within the chamber **13**. The fire extinguisher **72** is preferably a conventional water pressurized extinguisher.

The entryway **61** provided in the side **15** of the chamber **13** is preferably a door hingedly attached to one of the sides **15**. Fire-resistant caulk is used to seal any seams in the chamber **13**, for example, between the sides **15**, the floor plate **18** and the side plates **19**, and about any of the openings or cutouts made in the sides.

Operation of the system **10** preferably involves at least three individuals: a welder **73**, a fire watch **74**, and a controller operator **75**. The welder **73** is located within the chamber **13** to perform welding operations. A fire watch **74** is also located within the chamber **13** to monitor the welding operations. Both the welder **73** and the fire watch **74** communicate to the exterior of the chamber **13** verbally using the communications link **62** and visually using the window **63**. In addition, both the welder **73** and the fire watch **74** may activate the first manual switch **56** to discontinue operations of the blowers **24**, the electrical panel **34**, and the welding torch **48**.

Prior to the welder **73** or the fire watch **74** entering the chamber **13** to conduct welding operations, the blowers **24** are activated to blow air into the chamber. The blowers **24** provide ambient air to the chamber **13** and create a positive pressure within the chamber that is higher than ambient pressure. The time required to pressurize the chamber **13** will depend upon the size of the chamber. However, at a flow rate of 1800 CFM per blower and using two blowers **24**, pressurizing an 8'×8'×8' chamber **13** requires only a few minutes to achieve a pressure within the chamber that is higher than ambient pressure.

Once the chamber **13** is pressurized, the inert gas from the pressurizing gas tank **68** is released into the cavity of the controller **66** to pressurize the controller. Pressurization of the controller **66** with inert gas from the pressurization tank **68** shields any heat or sparks generated from the electrical circuitry within the controller from encountering flammable gases exterior to the controller.

The controller **66** is then activated and the power switch **37** is closed to supply electrical power to the electrical panel **34**, the pressure sensor **53**, the gas detectors **54**, **57**, **58**, **59**, and **60**, and the oxygen sensor **55**. Signals from the pressure sensor **53**, the gas detectors **54**, **57**, **58**, **59**, and **60**, and the oxygen sensor **55** are monitored to confirm that the chamber **13** is pressurized, that none of the gas detectors **54**, **57**, **58**, **59**, and **60** are detecting gas in the chamber or near the chamber, and that an acceptable level of oxygen is present in the chamber.

If the pressure sensor **53** indicates that the chamber **13** is pressurized, that none of the gas detectors **54**, **57**, **58**, **59**, and **60** are detecting gas, and that the oxygen detector **55** detects an acceptable level of oxygen in the chamber, the welder **73** and the fire watch **74** enter the chamber **13** through the entryway **61**. It should be appreciated that opening the entryway **61** to the chamber **13** releases some of the air in the chamber **13** thereby decreasing temporarily the pressure within the chamber. Preferably, the blowers **24** are operating at a sufficient capacity to permit the entryway door **61** to be opened and closed at least once without reducing the pressure within the chamber **13** to a level near ambient pressure. If, however, the pressure within the chamber **13** dips below an acceptable level, the pressure sensor **53** will signal the controller **61** to activate the alarms **64**, **65**, **70**, and **71** and to open the power switch **37**. In that event, the welder **73** and

the fire watch **74** must wait another few minutes for the blowers **24** to re-pressurize the chamber **13** to a level sufficiently higher than before so that opening of the entry-way **61** will not reduce the chamber pressure to below ambient pressure. Signaling of low chamber pressure by the pressure sensor **53** to the controller **66** does not interrupt the continued operation of the blowers **24** which are pressurizing the chamber **13**.

Once inside the chamber **13**, the welder **73** or the fire watch **74** reads the field mounted display of the oxygen detector **55** to confirm that an oxygen level sufficient to support their breathing is present within the chamber **13**. The welder **73** and the fire watch **74** also confirm that the communications link **62** and the electric panel **34** are operable. If the field mounted display of the oxygen detector **55** indicates that sufficient oxygen is present, and if the communications link **62** and electric panel **34** are operable, the welding machine **41** is energized and the welding torch **48** is lit so that welding operations may begin.

Welding creates intense heat from a flame or electric arc generated by the welding torch **48** as well as sparks **76** and slag **77** caused from contact of the flame or arc with the metal object **14**. The sparks **76** spray outwardly from the object **14** and the slag **77** falls downwardly. As the sparks **76** and slag **77** travel from the point at which the torch flame contacts the object **14**, the sparks **76** and the slag **77** begin to cool.

The sides **15**, the side plates **19** and the floor **18** of the chamber **13** contain the sparks **76** and the slag **77** within the chamber **13**. The ventilation duct **29** also prevents the sparks **76** and slag **77** from escaping the chamber **13** prior to cooling. In particular, the grill **32** of the ventilation duct **29** serves as a filter to inhibit sparks **76** and slag **77** from passing through the grill and entering the downward extension **31**. Also, the length of the lateral extension **30** is preferably at least several feet such that in the event that sparks **76** or slag **77** were to inadvertently enter the downward extension **31**, the time required to travel the length of the lateral extension toward the second opening **28** is sufficient to enable the sparks and slag to cool prior to exiting the chamber **13**.

The pressurization of the chamber **13** by the blowers **24** inhibits flammable gases and vapors from entering the chamber. Signaling to the controller **66** the presence of combustible gases exterior to the chamber **13** by the exterior gas detectors **57**, **58**, **59**, and **60** also inhibits flammable gases and vapors from entering the chamber **13** during welding operations. If any of the exterior gas detectors **57**, **58**, **59**, and **60** detects the presence of combustible gas, a signal is sent to the controller **66**. In turn, the controller **66** activates the blower shutoff valve **27**, the power switch **37**, the welding machine shutoff valve **49**, the tank shutoff valves **50**, **51** and **52**, and the alarms **64**, **65**, **70** and **71**. In addition, the controller **66** may also activate the emergency shut down switch **69** to immediately shut down all electrical operations on the platform **11**.

If the interior gas detector **54** detects the presence of gas within the chamber **13**, the interior gas detector signals the controller **66**. In turn, the controller **66** activates the blower shutoff valve **27**, the power switch **37**, the welding machine shutoff valve **49**, the tank shutoff valves **50**, **51** and **52**, the emergency shut down switch **69**, and the alarms **64**, **65**, **70** and **71**.

If the oxygen detector **55** detects a low level of oxygen within the chamber **13**, the oxygen detector signals the controller **66**. In turn, the controller **66** activates the power switch **37**, the welding machine shutoff valve **49**, the tank shutoff valves **50**, **51** and **52**, and the alarms **64**, **65**, **70** and **71**. The blowers **24** preferably continue to operate after the oxygen detector **55** signals the controller **66** to raise the oxygen level within the chamber **13** by blowing air into the chamber.

In the event another problem is detected, for example, if a fire ignites within the chamber **13**, a blowout occurs on the platform **11**, or unfavorable weather conditions threaten the platform, the first manual switch **56**, the exterior control switch **67** or the emergency shut down switch **69** may be depressed. Depression of the first manual switch **56** or the exterior control switch **67** signals the controller **66** to activate the blower shutoff valve **27**, the power switch **37**, the welding machine shutoff valve **49**, the tank shutoff valves **50**, **51** and **52**, and the alarms **64**, **65**, **70** and **71**. Depression of the emergency shut down switch **69** shuts down the electrical power source **78** for the platform **11** thereby ceasing all electrical operations on the platform.

It is preferred that the chamber **13** is erected on a horizontal surface of the platform **11**. However, it should be appreciated that the scaffolding **17** may be mounted in other configurations, such as protruding outwardly in a lateral direction from a side of the platform **11** in order to establish a foundation for a chamber **13** that mounts to the side of a platform. For example, to repair an object **14** laterally positioned to the platform **11**, scaffolding framework **17** might be erected outwardly from a side of the platform. In such a configuration, the scaffolding **17** rather than the platform **11** itself would serve to support the floor **18** of the chamber **13**. It should also be appreciated that although the scaffolding **17** and sides **15** of the chamber **13** have been illustrated in a rectangular configuration, the chamber may take the shape of any number of configurations depending upon obstacles, such as active pipelines and other structures, about which the proposed welding area, i.e. the interior space **16**, is located.

It is also preferred that the emergency shut down switch **69** although illustrated adjacent the controller **66** is operable not only by an operator located adjacent the controller **66**, but also by an operator that is controlling operations of the platform **11**. In this manner, a platform operator may observe operations of the chamber **13** from a distance and upon hearing or seeing any warnings from the alarms **64**, **65**, **70** and **71** may activate the emergency shut down switch **69** to prevent ignition or explosion of flammable materials during welding operations in the chamber. Additionally, the first manual switch **56** may be in electrical communication with the emergency shut down switch **69** directly or through the controller **66** so that activation of the first manual switch shuts down the platform power source **78**.

Although the system **10** has been illustrated and described in connection with welding utilities, it should be appreciated that the system **10** is not limited to controlling welding operations adjacent flammable materials. Applications of other industrial utilities, for example painting, sanding, grinding, or other machining operations, could be controllably operated within the chamber **13** adjacent flammable materials using the above-described system.

From the foregoing, it is seen that a new system for controllably conducting welding adjacent flammable materials is now provided which overcome problems associated with those of the prior art. It should, however, be understood that the just described system merely illustrates principles of the invention in preferred forms. Many modifications, additions and deletions may, of course, be made thereto without departure from the spirit and scope of the invention as set forth in the following claims.

We claim:

1. A system for conducting welding adjacent flammable materials on a platform, the system comprising

a chamber defining an interior space;

a welding apparatus operable within said interior space;

a blower in fluid communication with said interior space and in communication with said controller, whereby the controller controls the operation of the blower in response to signals received from the sensor,

a sensor for sensing combustible gas in said interior space and generating a signal in response to said sensor sensing of a pre-determined level of combustible gas; and

a controller in communication with said welding apparatus and in communication with said sensor, said controller being capable of controlling the operation of the welding apparatus,

whereby the controller controls the operations of the welding apparatus in response to signals received from the sensor.

2. The system of claim 1 wherein said system further comprises an air pressure sensor for sensing the air pressure in said interior space and generating an air pressure signal in response to the sensing of an interior air pressure below a pre-selected level, said air pressure sensor being in communication with said controller, whereby the controller controls operations of the welding apparatus in response to air pressure signals received from the air pressure sensor.

3. The system of claim 1 further comprising a detector for detecting oxygen levels in said interior space and generating an oxygen level signal, said detector being in fluid communication with said controller, whereby the controller controls operations of the welding apparatus in response to oxygen level signals received from the oxygen detector.

4. The system of claim 1 further comprising an electric panel in communication with said controller for supplying electricity to said interior space, whereby the controller controls the electric panel in response to signals received from the sensor.

5. A system for conducting welding adjacent flammable materials on a platform, the system comprising

a chamber defining an interior space;

a welding apparatus operable within said interior space;

a sensor for sensing combustible gas in said interior space and generating a first signal in response to said sensor sensing a pre-determined level of combustible gas, an exterior sensor for sensing combustible gas outside of said interior space and generating a second signal, said exterior sensor being in communication with said controller;

a controller in communication with said welding apparatus and in communication with said sensor, said controller being capable of controlling the operation of the welding apparatus,

whereby the controller controls the operations of the welding apparatus in response to the first signal and the second signal.

6. The system of claim 5 further including a blower in fluid communication with said interior space and in communication with said controller, whereby the controller controls operations of the blower in response to the first signal or the second signal.

7. A method for controllably conducting welding adjacent flammable materials on a drilling platform comprising the steps of:

(a) Building a chamber about an object on the platform to be welded in order to separate the object from adjacent flammable materials and to create a substantially sealed environment about the object,

(b) Blowing air into the chamber to create a positive pressure within the chamber that inhibits combustible gases from entering the chamber,

(c) Operating a welding torch within the chamber to repair the object while sensing inside the chamber for combustible gas above a pre-selected level, and

(d) Ceasing the welding operations upon the sensing detecting combustible gas inside the chamber above the pre-selected level.

8. The method of claim 7 wherein in step (c) sensing is also performed outside the chamber for the presence of combustible gas above a pre-selected level and wherein in step (d) welding operations are ceased upon the sensing detecting combustible gas inside the chamber or outside the chamber.

9. The method of claim 7 wherein in step (b) a blower is used to blow air into the chamber, and in step (d) operations of the blower are ceased upon detecting combustible gas inside the chamber.

10. The method of claim 7 wherein following step (d) the combustible gas is removed from inside the chamber and steps (b) through (d) are repeated.

11. The method of claim 7 wherein in step (c) sensing is also performed for the presence of oxygen within the chamber and in step (d) welding operations are ceased upon detecting that the level of oxygen within the chamber is below a pre-selected level.

12. The method of claim 7 further comprising step (e) drilling operations for flammable materials are performed on the platform concurrently with the welding operations and upon detecting combustible gas within the chamber above the pre-selected level, one or more of the drilling operations are ceased.

13. A method for controllably conducting welding adjacent flammable materials on a drilling platform comprising the steps of:

(a) Building a chamber about an object on the platform to be welded in order to separate the object from adjacent flammable materials and to create a substantially sealed environment about the object,

(b) Blowing air into the chamber to create a positive pressure within the chamber that inhibits combustible gases from entering the chamber,

(c) Operating a welding torch within the chamber to repair the object while sensing outside the chamber combustible gas above a pre-selected level, and

(d) Ceasing the welding operations upon the sensing detecting combustible gas outside the chamber above the pre-selected level.

14. The method of claim 13 wherein in step (c) sensing is also performed inside the chamber for the presence of combustible gas above a pre-selected level and wherein in step (d) welding operations are ceased upon the sensing detecting combustible gas outside the chamber or inside the chamber.

15. The method of claim 13 wherein in step (b) a blower is used to blow air into the chamber, and in step (d) operations of the blower are ceased upon detecting combustible gas outside the chamber.

16. The method of claim 13 wherein following step (d) the combustible gas is removed from outside the chamber and steps (b) through (d) are repeated.

17. The method of claim 13 wherein in step (c) sensing is also performed for the presence of oxygen within the chamber and in step (d) welding operations are ceased upon detecting that the level of oxygen within the chamber is below a pre-selected level.

18. The method of claim 13 further comprising step (e) drilling operations for flammable materials are performed on the platform concurrently with the welding operations and upon detecting combustible gas adjacent the chamber above the pre-selected level, one or more of the drilling operations are ceased.

* * * * *

US006783054C1

(12) INTER PARTES REEXAMINATION CERTIFICATE (0077th)

United States Patent

Pregeant, Jr. et al.

(10) Number: US 6,783,054 C1

(45) Certificate Issued: Jun. 30, 2009

(54) **SYSTEM FOR CONTROLLABLY CONDUCTING WELDING OPERATIONS ADJACENT FLAMMABLE MATERIALS AND METHOD OF WELDING ADJACENT FLAMMABLE MATERIALS**

(75) Inventors: **Clyde W. Pregeant, Jr.**, Cut Off, LA (US); **Richard J. Pregeant**, Lochport, LA (US); **Mark A. Pregeant**, Galliano, LA (US); **Glenn R. Payton**, Gretna, LA (US); **James R. Craig**, Belle Chasse, LA (US)

(73) Assignee: **Alford Safety Services, Inc.**, Houma, LA (US)

Reexamination Request:
No. 95/000,148, Nov. 22, 2006
No. 90/008,050, Jun. 1, 2006

Reexamination Certificate for:

Patent No.:	6,783,054
Issued:	Aug. 31, 2004
Appl. No.:	10/155,716
Filed:	May 20, 2002

(51) **Int. Cl.**
B23K 9/10 (2006.01)
B23K 31/02 (2006.01)

(52) **U.S. Cl.** 228/102; 228/8; 228/103; 228/119; 219/72; 219/130.01; 454/228

(58) **Field of Classification Search** ..... None
See application file for complete search history.

(56) **References Cited**

U.S. PATENT DOCUMENTS

5,101,604	A	4/1992	Wardlaw, III
6,783,054	B1	8/2004	Pregeant, Jr. et al.

FOREIGN PATENT DOCUMENTS

GB	2311847	10/1997

OTHER PUBLICATIONS

Norsok Standard—Temporary Equipment; Z–015; Rev. 1, Jul. 1998.

Electrical Safety in Hazardous Environments, Apr. 19–21, 1994; Conference Publication, No. 390. IEE, 1994. Current Appln. of Oil–Well Equipment in Hazardous Areas; C.G. Casso.

Technor Multi–channel Mobile Gas Detection System TN 99–4 for offshore uses allows "hot work" in Ex–areas (Zones 1 and 2).

Environmental Control Unit Division Technical Bulletin WDP–12–R1.2, (May 1997); Model WDP–12, Wall Mount Dual Blower Building Pressurization Unit—Bebco Industries.

Environmental Control Unit Division Technical Bulletin GD–R–R1, (May 1997); Model GD & GDSB, Gas Detector Sensors, Monitors, Power Supplies & Mounting Brackets—Bebco Industries.

Environmental Control Unit Division Document WDP–12 1OM–R1.0, (Feb. 1997) Wall Mount Dual Blower Building Pressurization Unit Installation and Ooperation Manual—Bebco Industries.

D. Parascin, "Welding Enclosure Eliminates Platform Shut–in", Oil and Gas Journal (May 4, 1998).

(Continued)

Primary Examiner—Joseph A. Kaufman

(57) **ABSTRACT**

A system (**10**) for conducting welding adjacent flammable materials (**12**) on a platform (**11**) is disclosed having a chamber (**13**) defining an interior space (**16**). The system also includes a welding apparatus (**48**) operable within the interior space. A sensor (**54**) is provided for sensing the presence of combustible gas within the interior space above a pre-selected level and generating a signal. An exterior sensor (**57**) is provided for sensing the presence of combustible gas outside the interior space above a pre-selected level and generating a signal. A controller (**66**) is in communication with the welding apparatus, the sensor, and the exterior sensor to control the operations of the welding appartus in response to signals received from the sensor.-

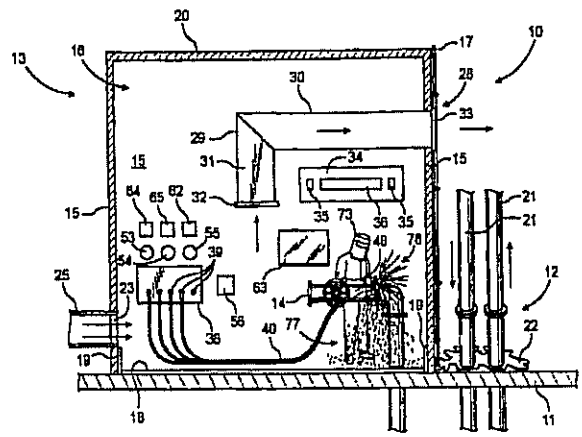

OTHER PUBLICATIONS

29 CFR 1910.146(b); 146(C)(5)(ii)(E); 146(C)(5)(ii)(G); 146(d)(5); 146(d)(6).
30 CFR 250.113.
46 CFR 108.185.
NFPA 496 A–2–10.
API 500 6.2; 6.52.
API 14C C.1.3.
I.G. Browning, "Welding Hot Work Habitats" Society of Petroleum Engineers (1994).
29 USC §653 (1998).
43 USC §1331 (2000).
29 CFR § 1910 Sub. Q, 1910.146, 1910.399, 1915.12, 1926.353 (1998).
30 CFR 250.107, 250.198, 250.113, 250.114, 250.459, 250.803 (2000).
46 CFR 108.085, 111.103, 111.105–33 (2000).
Memorandum of Understanding between the United States Coast Guard, The Department of Transportation and the Occupational Safety and Health Administration, The Department of Labor Concerning Occupation Safety and Health on Artificial Islands,Installations and Other Devices on the Outer Continental Shelf on the United States (1979).
MMS Production Inspection Form Procedural Handbook (2000).
Memorandum of Understanding between Minerals Management Service, US. Department of the Interior and United States Coast Guard, U.S. Department of Transportation (1998).
API 500–Recommended Practice for Classification of Locations for Electrical Installatons at Petroleum Facilities Classified as Class 1, Division 1 and Division 2. (1997).
API 14C "Recommended Practice for Analysis, Design, Installaton, and Testing of Basic Surface Safety Systems for Offshore Production Platforms," American Petroleum Institute (1998).
API 14F "Recommended Practice for Design and Installation of Electrical Systems for Fixed and Floating Offshore Petroleum Facilities for Unclassified and Class 1, Division 1 and Division 2 Locations," American Petroleum Institue (1999).
NFPA 496 "Standard for Purged and Pressurized Enclosures for Electrical Equipment," National Fire Prevention Association (1998).
American National Standard Institute ANSI Z117.1:1995—"Safety Requirements for Confined Spaces" American Society of Safety Engineers (1995).
American National Standard Institute ANSI Z49.1:1999—"Safety in Welding, Cutting and Allied Processes" American Society of Safety Engineers (1999).
Australian Standard 2865–1995—"Safe working in a confined space".
Confined Spaces Regulation 1999—"Safe work in confined spaces," Health and Safety Commission, HSE Books (1997).
Woodside Energy Limited Engineering Excellence Awards 1999, North Rankin A Fire & Gas System Replacement Project (1999).
D. Parascin, "Welding Enclosure eliminates platform shut–in," Oil & Gas Journal (May 4, 1998).
SPE (Society of Petroleum Engineers) 27238, Welding Hot Work Habitats SPE Health, Safety and Environmental in Oil and Gas Exploration and Production Conference, Jan. 25–27, 1994, Jakarta, Indonesia; Author: Browning, I.G.

INTER PARTES REEXAMINATION CERTIFICATE ISSUED UNDER 35 U.S.C. 316

THE PATENT IS HEREBY AMENDED AS INDICATED BELOW.

Matter enclosed in heavy brackets [ ] appeared in the patent, but has been deleted and is no longer a part of the patent; matter printed in italics indicates additions made to the patent.

AS A RESULT OF REEXAMINATION, IT HAS BEEN DETERMINED THAT:

Claims **2**, **3** and **6**–**18** are cancelled.

Claims **1** and **5** are determined to be patentable as amended.

Claim **4**, dependent on an amended claim, is determined to be patentable.

1. A system for conducting welding adjacent flammable materials on a platform, the system comprising

a chamber defining an interior space;

a controller;

a pressure sensor located within said chamber for sensing the change in air pressure in said chamber, which pressure sensor is capable of generating an electrical signal to the controller upon sensing a change in pressure below a pre-selected level of pressure;

an oxygen sensor located within said chamber for sensing the level of oxygen within said chamber;

at least one gas detector located outside of said chamber, which at least one gas detector is capable of sensing the presence of combustible gases;

a welding apparatus operable within said interior space;

a manual emergency shutdown switch located within said chamber;

a blower in fluid communication with said interior space and in communication with said controller, whereby the controller controls the operation of the blower in response to signals received from the [sensor] *at least one gas detector located outside of said chamber;*

a [sensor] *gas detector located within said chamber capable of* [for sensing] *detecting* combustible gas in said interior space and generating a signal in response to said [sensor sensing of] *detector detecting* a predetermined level of combustible gas; and

[a] *said* controller in communication with said welding apparatus and in communication with said [sensor] *pressure sensor, said oxygen sensor, said at least one gas detector located outside of said chamber, said manual emergency shutdown switch, and said gas detector located inside of said chamber,* said controller being capable of controlling the operation of the welding apparatus,

[whereby the controller controls the operations of the welding apparatus] in response to signals received from [the sensor] *one or more of said pressure sensor, said oxygen sensor, said at least one gas detector located outside of said chamber, said manual emergency shutdown switch, and said gas detector located inside of said chamber, and wherein said controller is also capable of allowing said blower to continue to operate in the event of a signal from said pressure sensor that the pressure in said chamber has been reduced to atmospheric pressure.*

5. A system for conducting welding adjacent flammable materials on a platform, the system comprising

a chamber defining an interior space;

a controller;

a welding apparatus operable within said interior space;

a [sensor] *first gas detector located within said chamber* for [sensing] *detecting* combustible gas in said interior space and generating a first signal in response to said [sensor sensing] *gas detector detecting* a predetermined level of combustible gas, [an] *a second gas detector* exterior [sensor] *of said chamber* for [sensing] *detecting* combustible gas outside of said interior space and generating a second signal, said [exterior sensor] *second gas detector* being in communication with said controller;

[a] *said* controller in communication with said welding apparatus and in communication with said [sensor] *first and second gas detectors,* said controller being capable of controlling the operaton of the welding apparatus;

a blower in fluid communication with said interior space and in communication with said controller;

whereby the controller controls the operations of the *blower and* welding apparatus in response to the first signal and the second signal.

* * * * *