Exhibit 1

US006144310A

United States Patent [19]

Morris

[11] Patent Number: 6,144,310

[45] Date of Patent: Nov. 7, 2000

[54] **ENVIRONMENTAL CONDITION DETECTOR WITH AUDIBLE ALARM AND VOICE IDENTIFIER**

[76] Inventor: **Gary Jay Morris**, 2026 Glenmark Ave., Morgantown, W. Va. 26505

[21] Appl. No.: **09/299,483**

[22] Filed: **Apr. 26, 1999**

Related U.S. Application Data

[60] Provisional application No. 60/117,307, Jan. 26, 1999.

[51] **Int. Cl.**[7] **G08B 25/08**

[52] **U.S. Cl.** **340/692**; 340/505; 340/506; 340/539; 340/577; 340/628; 340/632; 340/693.11

[58] **Field of Search** 340/692, 500, 340/505, 506, 517, 520, 521, 522, 523, 524, 531, 532, 533, 534, 539, 540, 577, 584, 605, 628, 632, 691.1, 691.4, 693.5, 693.6, 693.7, 693.9, 693.11, 286.01, 286.05, 286.11, 328, 329, 386.1, 384.3, 384.4–384.73

[56] **References Cited**

U.S. PATENT DOCUMENTS

4,160,246	7/1979	Martin et al. .	
4,275,274	6/1981	English .	
4,282,519	8/1981	Hagland et al. .	
4,288,789	9/1981	Molinick et al.	340/524
4,335,379	6/1982	Martin .	
4,343,990	8/1982	Ueda .	
4,350,860	9/1982	Ueda .	
4,351,999	9/1982	Nagamoto et al. .	
4,531,114	7/1985	Topol et al. .	
4,688,021	8/1987	Buck et al. .	
4,698,619	10/1987	Loeb	340/384.1
4,754,266	6/1988	Shand et al. .	
4,816,809	3/1989	Kim .	
4,862,147	8/1989	Thomas	340/628
4,951,045	8/1990	Knapp et al.	340/944
5,229,753	7/1993	Berg et al. .	
5,291,183	3/1994	Chiang .	
5,349,338	9/1994	Routman et al. .	
5,379,028	1/1995	Chung .	
5,460,228	10/1995	Butler .	
5,587,705	12/1996	Morris .	
5,657,380	8/1997	Mozer .	
5,663,714	9/1997	Fray .	
5,673,023	9/1997	Smith .	
5,724,020	3/1998	Hsu .	
5,726,629	3/1998	Yu .	
5,764,134	6/1998	Carr et al. .	

(List continued on next page.)

OTHER PUBLICATIONS

NFPA 72 National Fire Alarm Code 1996 Edition, 72–1to 72–106 (partial copy).

NFPA 72, Recommended Practice for the Installation of Household Carbon Monoxide (CO) Warning Equipment 1998 Edition;.

UL 217 ISBN 0–7629–0062–8, Single and Multiple Station Smoke Alarms, Mar. 16, 1998–Feb. 21, 1997.

UL 2034 ISBN 0–7629–274–9, Single and Multiple Station Carbon Monoxide Alarms, Dec. 21, 1998–Oct. 29, 1996.

National Fire Protection Association–NFPA72–National Fire Alarm Code 1996 Edition pp. 72–105 through 72–106. Quincy, MA USA.

Primary Examiner—Nina Tong

Attorney, Agent, or Firm—Rockey, Milnamow & Katz, Ltd.

[57] **ABSTRACT**

Due to the presence of various environmental condition detectors in the home and businesses such as smoke detectors, carbon monoxide detectors, natural gas detectors, etc., each having individual but similar sounding alarm patterns, it can be difficult for occupants of such dwellings to immediately determine the specific type of environmental condition that exists during an alarm condition. The present invention comprises an environmental condition detector using both tonal pattern alarms and pre-recorded voice messages to indicate information about the environmental condition being sensed. Single-station battery-powered and 120 VAC detectors are described as are multiple-station interconnected 120 VAC powered detectors. The pre-recorded voice messages describe the type of environmental condition detected or the location of the environmental condition detector sensing the condition, or both, in addition to the tonal pattern alarm. Provisions are made for multi-lingual pre-recorded voice messages.

22 Claims, 5 Drawing Sheets

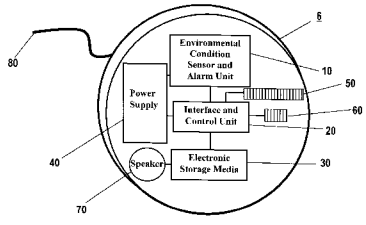

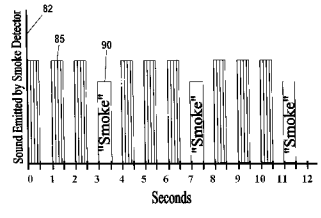

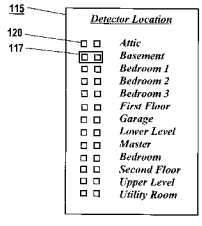

U.S. PATENT DOCUMENTS

5,786,749	7/1998	Johnson et al. .	
5,786,768	7/1998	Chan et al. .	
5,798,686	8/1998	Schreiner .	
5,841,347	11/1998	Kim .	
5,846,089	12/1998	Weiss et al. .	
5,856,781	1/1999	Michel et al. .	
5,864,288	1/1999	Hogan .	
5,874,893	2/1999	Ford .	
5,877,698	3/1999	Kusnier et al. .	
5,886,631	3/1999	Ralph .	
5,894,275	4/1999	Swingle .	
5,905,438	5/1999	Weiss et al.	340/636
5,914,650	6/1999	Segan .	
5,936,515	8/1999	Right et al. .	
6,043,750	3/2000	Mallory .	

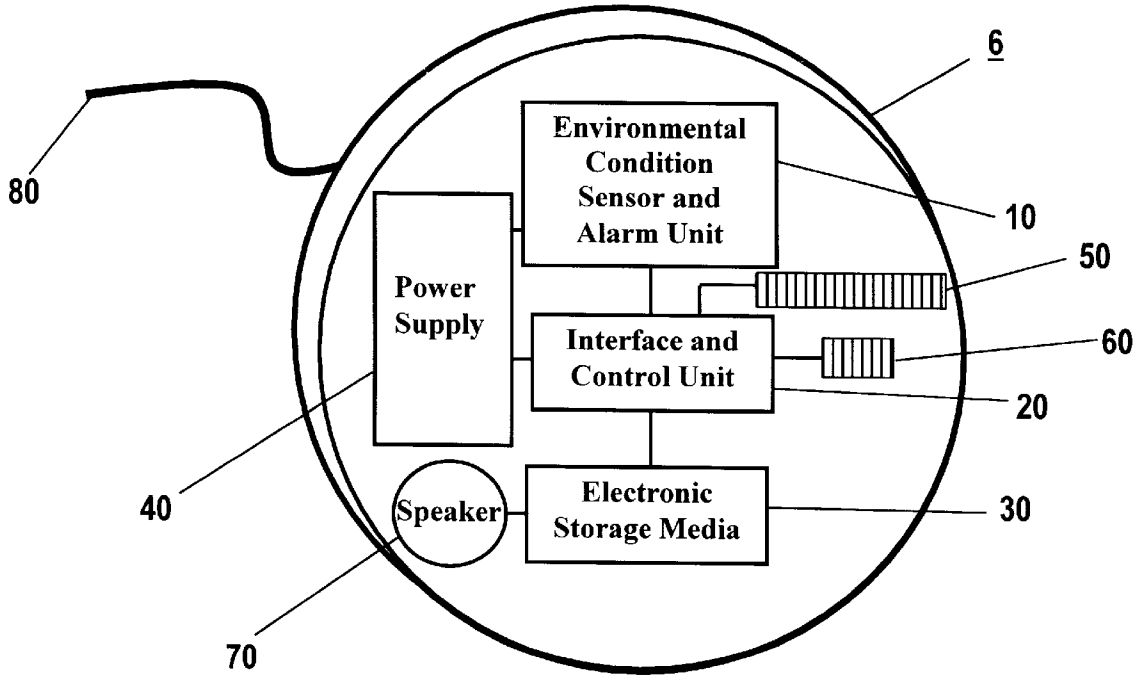
6
80
Environmental Condition Sensor and Alarm Unit
10
50
Power Supply
Interface and Control Unit
60
20
40
Speaker
Electronic Storage Media
30
70

Fig. 1

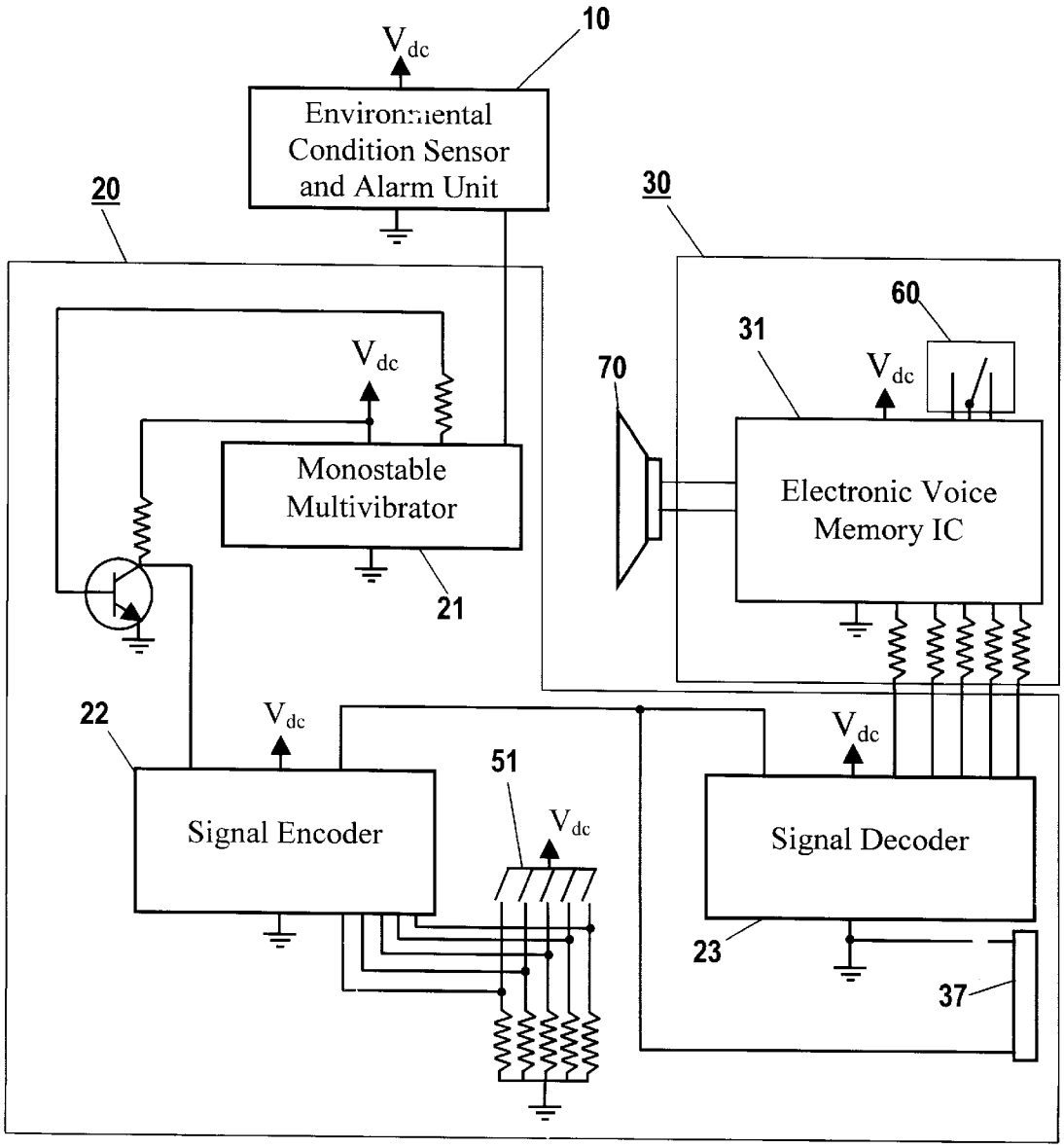
10
V_{dc}
Environmental
Condition Sensor
and Alarm Unit
20
30
60
31
70
V_{dc}
V_{dc}
Monostable
Multivibrator
Electronic Voice
Memory IC
21
22
V_{dc}
V_{dc}
51
V_{dc}
Signal Encoder
Signal Decoder
23
37

Fig. 2

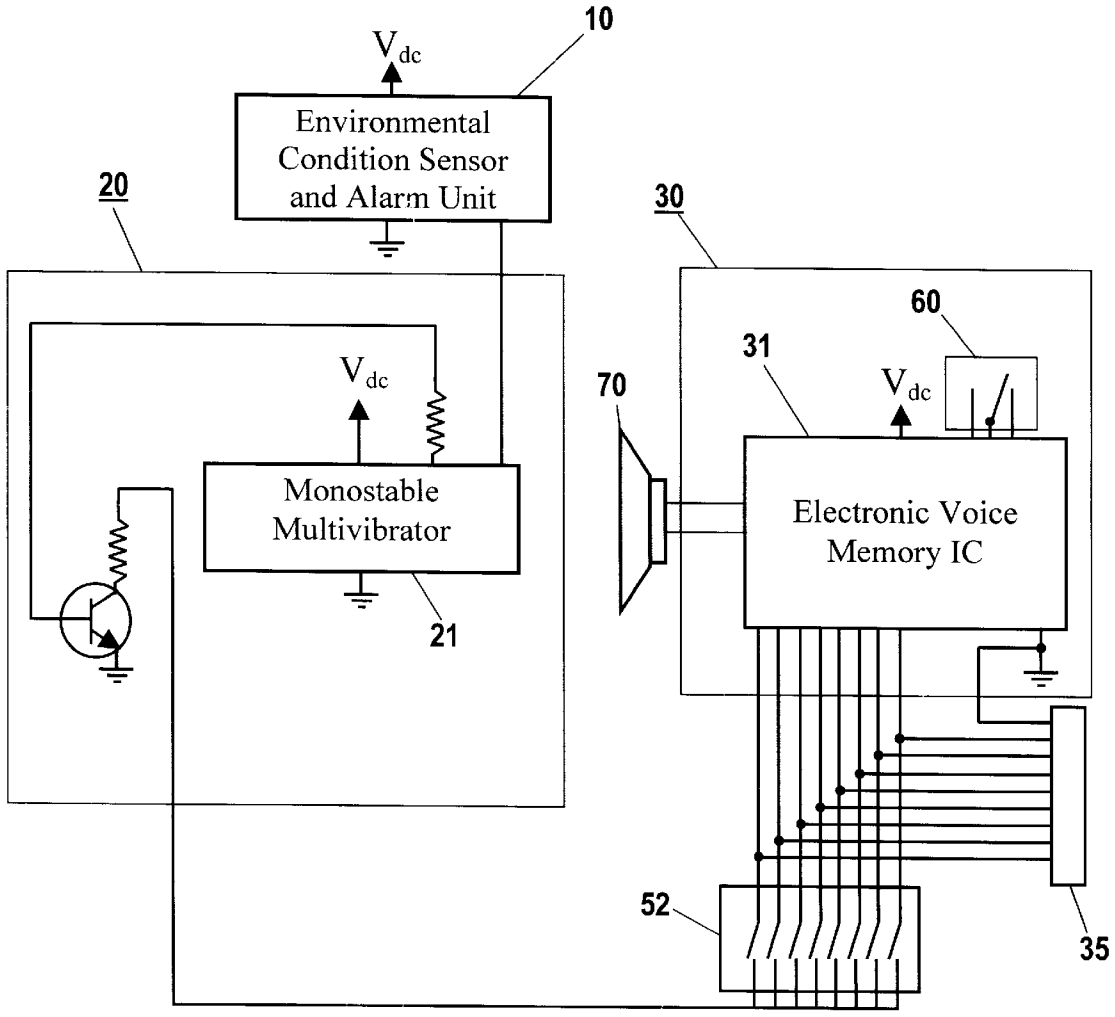
10
V_{dc}
Environmental
Condition Sensor
and Alarm Unit
20
30
60
31
V_{dc}
70
V_{dc}
Monostable
Multivibrator
Electronic Voice
Memory IC
21
52
35

Fig. 3

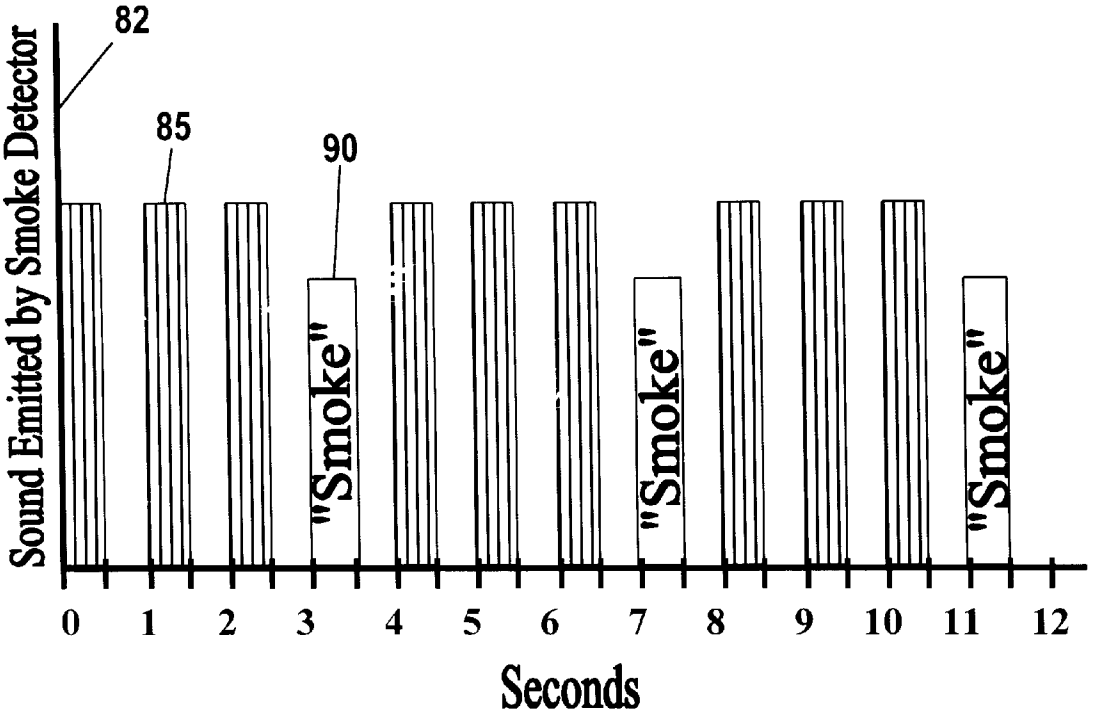
82
85
90
Sound Emitted by Smoke Detector
"Smoke"
"Smoke"
"Smoke"
0 1 2 3 4 5 6 7 8 9 10 11 12
Seconds

Fig. 4

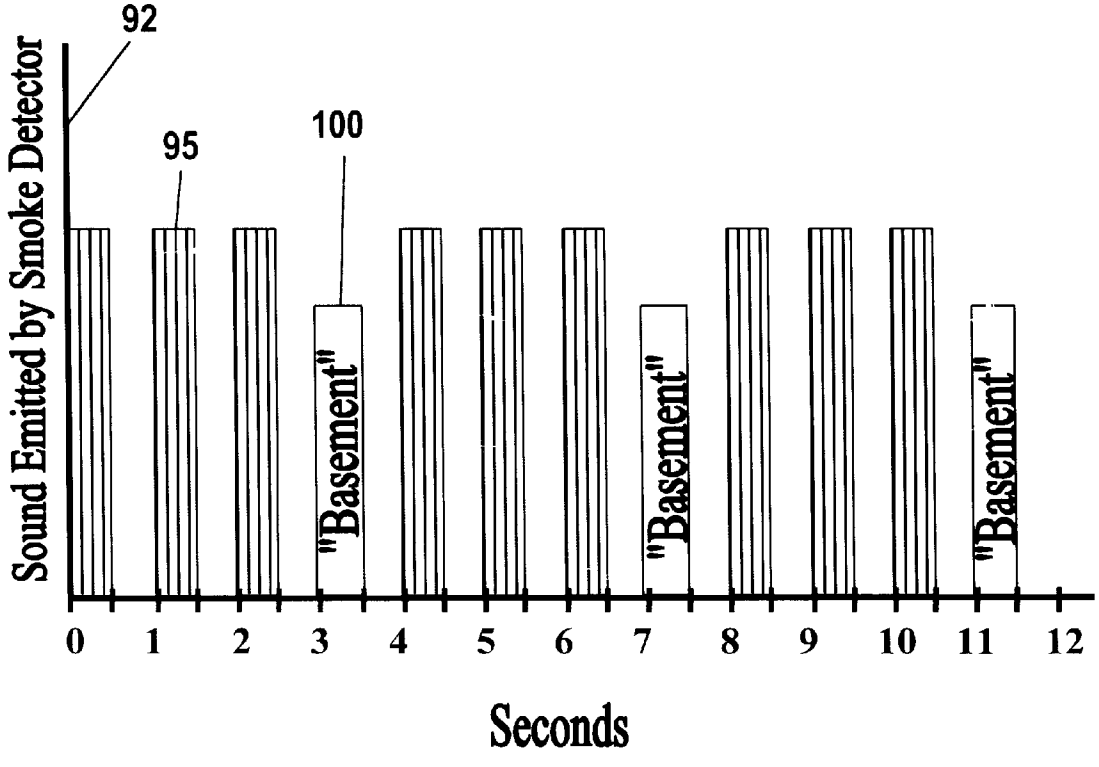
92
95
100
Sound Emitted by Smoke Detector
"Basement"
"Basement"
"Basement"
0 1 2 3 4 5 6 7 8 9 10 11 12
Seconds

Fig. 5

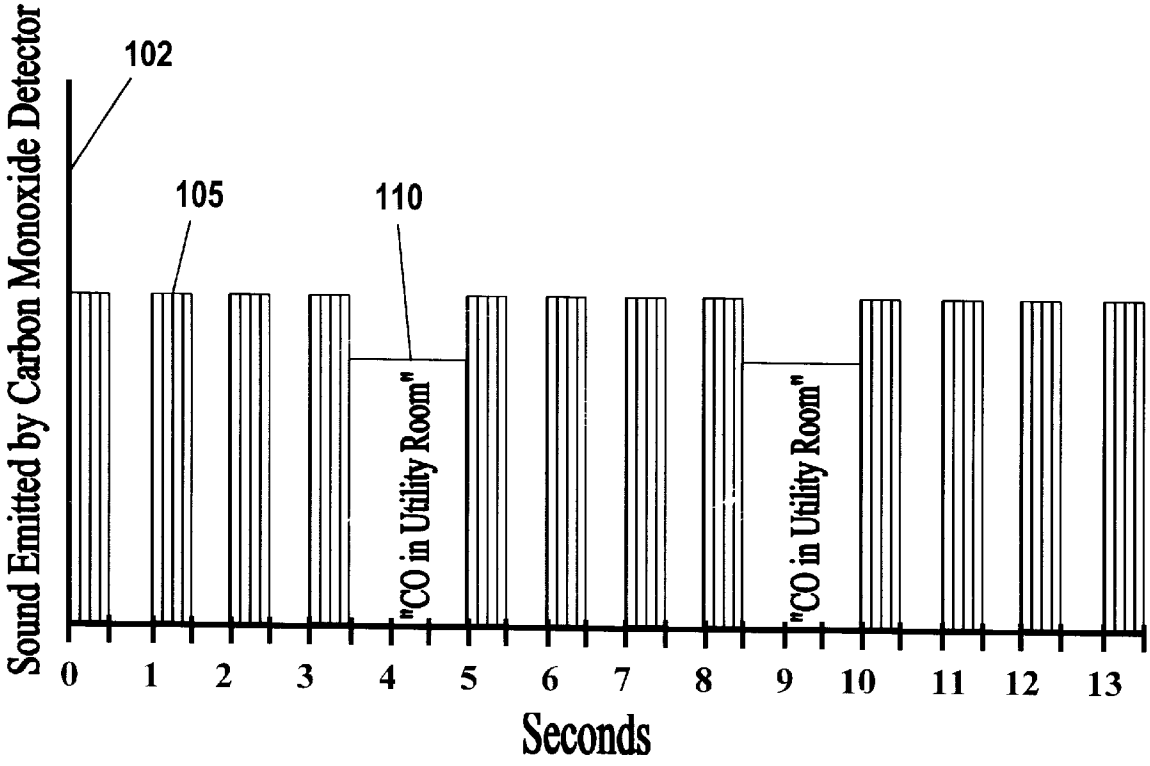
Sound Emitted by Carbon Monoxide Detector
102
105
110
"CO in Utility Room"
"CO in Utility Room"
0 1 2 3 4 5 6 7 8 9 10 11 12 13
Seconds

Fig. 6

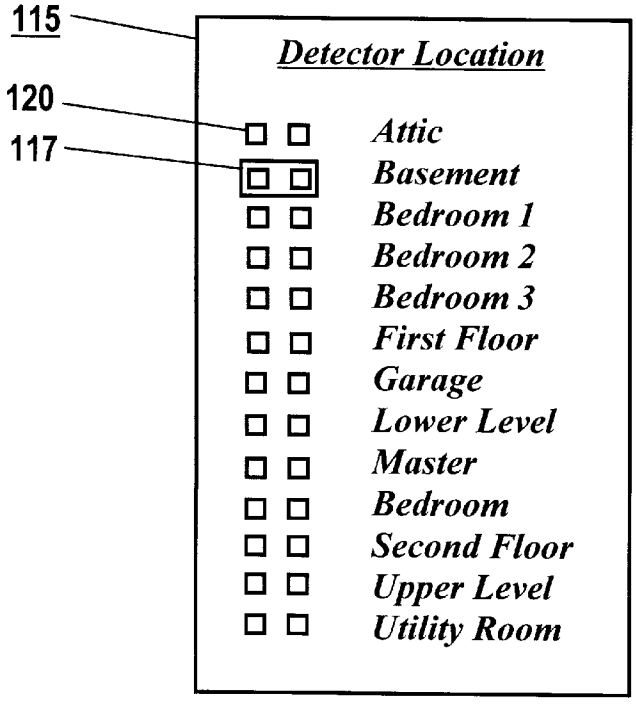
115
120
117
Detector Location
Attic
Basement
Bedroom 1
Bedroom 2
Bedroom 3
First Floor
Garage
Lower Level
Master
Bedroom
Second Floor
Upper Level
Utility Room

Fig. 7

ENVIRONMENTAL CONDITION DETECTOR WITH AUDIBLE ALARM AND VOICE IDENTIFIER

This application is in reference to Provisional Patent Application No. 60/117,307 filed Jan. 26, 1999.

BACKGROUND FOR THE INVENTION

1. Field of Invention

The present invention relates to environmental condition detection for dwellings including smoke detection, carbon monoxide gas detection, natural gas detection, propane gas detection, combination smoke and carbon monoxide gas detection, etc. such that the audible tonal pattern alarm emitted by a detector sensing an abnormal environmental condition is accompanied by a pre-recorded voice message that clearly indicates the specific type of condition sensed or the specific location of the detector sensing the condition, or both.

2. Background

With the widespread use of environmental condition detectors such as smoke detectors, carbon monoxide detectors, natural gas detectors, propane detectors, etc. in residences and businesses today, there is a critical need to provide definite distinction between the tonal pattern alarms emitted by each type of detector so that the occupants of the involved dwelling are immediately made aware of the specific type of condition detected along with its location so they can take the proper immediate action. Regulating and governing bodies for products of the home safety industry (National Fire Protection Association, Underwriters Laboratories, etc.) have recently regulated the tonal patterns emitted from such environmental detectors, however, much confusion still exists among the very similar tonal pattern alarms emitted by various detector types. This is particularly true for those individuals partially overcome by the environmental condition, those asleep when the alarm occurs, young children, or the elderly. Therefore, a need exists whereby the environmental detector sensing an abnormal condition plays a recorded voice message stating the specific condition and/or location of the condition in addition to the required tonal pattern alarm. In conventional smoke detectors and carbon monoxide detectors, there are silent periods within the prescribed audible tonal pattern alarms where recorded verbal messages such as "smoke" or "CO" or "carbon monoxide" or "smoke in basement" or "utility room" (as examples) may be played during this alarm silence period to clearly discriminate between the types of audible alarms and environmental conditions and where the environmental condition was detected. Such messages immediately provide the occupants in an involved dwelling important safety information during potentially hazardous environmental conditions. The occupants can make informed decisions about how to respond to the alarm condition. Occupants residing in the uninvolved area of the dwelling may choose to assist those residing in the involved area depending on the location and type of condition detected. The type of environmental condition sensed or the location of the condition, or both are immediately made clear through the use of recorded voice messages in addition to conventional tonal pattern alarms.

3. Discussion of Prior Art

While there are inventions in the prior art pertaining to emergency alarm systems utilizing verbal instructions, none are known to the inventor which use a combination of tonal pattern alarms and factory pre-recorded voice messages with

function or intent to clearly and specifically identify and clarify which type of environmental condition is present in a dwelling. Nor are there known inventions that use such pre-recorded voice messages to specifically identify the location of the environmental condition sensed by environmental condition detectors in dwellings without the use of a central control unit.

Morris (U.S. Pat. No. 5,587,705) describes a wireless smoke detector system using a minimum of two smoke detectors to indicate the location of the smoke detector sensing the smoke through coded alarm patterns. The present invention does not use wireless communication between detectors; each detector may operate without any others or may operate as a hardwired system with interconnected units for those powered by 120 VAC. Fray (U.S. Pat No. 5,663,714) describes a warning system for giving user-recorded verbal instructions during a fire. Fray teaches an object of his invention is to warn individuals of the presence of smoke and fire and to provide verbal instructions and guidance as how to escape the hazard. Routman et al (U.S. Pat. No. 5,349,338) describe a fire detector and alarm system that uses personally familiar user-recorded verbal messages specifically for a small child or adult in need of verbal instructions during the presence of a fire. Chiang (U.S. Pat. No. 5,291,183) describes a multi-functional alarming system using a microphone to sense ambient conditions and user-recorded verbal instructions for indicating the way to escape a fire. Kim (U.S. Pat. No. 4,816,809) describes a speaking fire alarm system that uses a central control system with remote temperature sensors. Haglund et al (U.S. Pat. No. 4,282,519) describe a hardwired smoke detector system whereby two audible alarm codes are indicated to determine whether the smoke was detected locally or not. Only two possible alarm patterns are used and no voice message is used with Haglund's hardwired system. Molinick and Sheilds (U.S. Pat. No. 4,288,789) describe an oral warning system for monitoring mining operations that uses a plurality of non-emergency condition sensors and second sensors for detecting emergencies. The patent further describes the use of a single and system-central multiple-track magnetic tape player for storing the verbal messages and links the alarm system to control the operation of mechanical devices (mining conveyor belts, etc.) during emergency conditions when verbal messages are played.

Additionally, Morris (U.S. Pat. No. 5,587,705), Fray (U.S. Pat. No. 5,663,714), Routman et al (U.S. Pat. No. 5,349,338), Chaing (U.S. Pat. No. 5,291,183), Kim (U.S. Pat. No. 4,816,809), and Haglund et al (U.S. Pat. No. 4,282,519) do not recite the specific use of factory pre-recorded voice messages to indicate the specific location of the environmental condition, or the use of voice messages to identify the specific type of environmental condition detected, or the use of a plurality of interconnected detectors emitting identical verbal messages, or a selectable means to define the installation location of the detector, all of which are taught in the present invention and afford significant safety advantages. While Molinick and Shields (U.S. Pat. No. 4,288,789) refer to verbally describing an emergency condition in mining operations, their patent teaches of a much more complex system than the present invention and describes a central control system with multiple stages of various configuration sensors and the use of user-recorded voice messages. Furthermore, the patent does not describe a selectable coding means to define the installation location of the sensors.

All known prior art providing user-recorded verbal instructions on how to escape a hazardous condition has

become impractical for use in dwellings in view of the recent National Fire Protection Association (NFPA) and Underwriters Laboratories (UL,) regulations that require a maximum silence period between tonal alarm patterns of 1.5 seconds (Ref UL2034, UL217, NFPA72 and NFPA720). This period of time is sufficient for the present invention to verbally indicate the type and location of the sensed environmental condition but is unlikely to be useful to provide detailed instructions, as taught in the prior art, to occupants on how to respond to a hazardous condition.

The present invention employs either single station environmental condition detectors or a system comprising direct, hardwired communication links between a plurality of environmental condition detectors to provide a tonal pattern alarm with pre-recorded voice message information regarding the specific type of environmental condition detected or the specific location of the detector sensing the environmental condition, or both, all without the need of a centralized control unit. For detector embodiments using pre-recorded voice messages to indicate the location of the detected condition, each detector is set-up by the user during installation to define the physical location of the detector within the dwelling according to pre-defined location definitions pre-programmed into the electronic storage media. The recorded voice messages are pre-recorded into the electronic storage media during manufacture and are not normally changeable by the user. In view of the recent National Fire Protection Association and Underwriters Laboratories regulations for tonal pattern alarms, it is not practical to have the user record their own sounds during the silent periods of the tonal pattern. The user may choose to record other alarm sounds that would violate the regulations governing such tonal patterns and compromise the safety features of the device. The use of factory pre-recorded voice messages alleviates this problem.

It is emphasized that no other related prior art known to the inventor makes use of factory pre-recorded voice messages to indicate the location of the environmental condition or the type of condition or both. Sufficient addressable electronic memory is available in the preferred embodiment of the invention to afford numerous pre-recorded voice messages.

SUMMARY OF THE INVENTION

Described herein is the Environmental Condition Detector with Audible Alarm and Voice Identifier invention, which comprises an environmental condition detector, such as a smoke detector, carbon monoxide gas detector, natural gas detector, propane detector, or any combination detector thereof, which detects the desired environmental condition (s) by those methods well known and described in the art and emits the prescribed audible tonal pattern alarm in accordance with the industry's empowered governing bodies' (National Fire Protection Association, Underwriters Laboratories etc.) criteria for such environmental conditions. Simultaneously, the environmental condition detector sensing the condition emits a verbal message to indicate, through a recorded voice message or synthesized human voice, the condition being sensed. This recorded voice message is emitted simultaneously with the audible tonal pattern alarm so as normally to occur during silent segments of the prescribed tonal pattern alarm. For example, for the condition of smoke detection, the smoke detector emits the following combination audible tonal pattern alarm (Beep) and recorded voice message, "Beep - - - Beep - - - Beep - - - 'SMOKE' - - - Beep - - - Beep - - - Beep - - - 'SMOKE' - - - " in a periodic manner for as long as the environmental condition is detected. As a second example, for carbon monoxide detection, a carbon monoxide detector emits "Beep - - - Beep - - - Beep - - - Beep - - - 'CO' - - - Beep - - - Beep - - - Beep - - - Beep - - - 'CO' - - - ". As a third example, for smoke detection with the location identifier, a smoke detector emits "Beep - - - Beep - - - Beep - - - "SMOKE IN BASEMENT' - - - Beep - - - Beep - - - Beep - - - 'SMOKE IN BASEMENT' - - - ". As a fourth example, for carbon monoxide detection with a voice location only identifier, a carbon monoxide detector emits "Beep - - - Beep - - - Beep - - - Beep - - - 'Utility Room' - - - Beep - - - Beep - - - Beep - - - Beep - - - 'Utility Room' - - - ".

OBJECTS AND ADVANTAGES OF THE PRESENT INVENTION

It is one object of the present invention to provide environmental condition detectors that function as single station (non-interconnected) detector units equipped to emit a tonal pattern alarm and a recorded voice message. The recorded voice message clearly identifies the location of the environmental condition detector sensing the condition, or describes the type of environmental condition that has been detected, or both, as illustrated in the above, non-exhaustive examples. The single station detector embodiment is battery powered or 120 VAC powered. User-selectable coding switches or jumpers permit the user to define the physical location of the single station unit within the dwelling. No other related prior art is known to the inventor that uses factory pre-recorded voice messages in combination with conventional tonal pattern alarms to indicate the specific type or specific location, or both, of an abnormal environmental condition as related to single station units.

It is another object of the present invention to provide an environmental condition detection system where one detector sensing an environmental condition causes all other interconnected detectors to emit identical tonal pattern alarms and recorded voice messages. The hardwired, directly interconnected detectors forming the environmental condition detection system are 120 VAC powered with optional battery back-up and use the recorded voice message to identify the location of the environmental condition detector sensing the condition, or to describe the type of environmental condition that has been detected, or both, as illustrated in the above, non-exhaustive examples. The environmental condition detection system embodiments of the present invention do not require the use of a centralized control unit (control panel) between detectors. No other related prior art is known to the inventor that uses factory pre-recorded voice messages in combination with conventional tonal pattern alarms to indicate the specific type or specific location, or both, of an abnormal environmental condition as related to a directly interconnected environmental condition detector system having no central control unit or panel.

A major advantage of both the single station embodiment and the system embodiment of the present invention is the use of factory pre-recorded voice messages that fit within the National Fire Protection Association and Underwriters Laboratories specified 1.5 second silence period of the standard smoke detector and carbon monoxide detector tonal pattern alarms. Prior art using user-recorded voice messages are intended to indicate directions on how to escape the hazard or how to respond to a hazard. Such messages would not practically fit into the maximum 1.5 second silent time period in conventional tonal alarm patterns for smoke detectors and carbon monoxide detectors used in dwellings. The allowance for a user to record his or her own messages may

actually add to the confusion and danger that results during an alarm condition if the user chooses to record additional alarm sounds or errs in the directions given in the message on how to properly respond to a hazardous conditon.

BRIEF DESCRIPTION OF THE DRAWINGS

FIG. **1** is a sketch of a preferred embodiment of the Environmental Condition Detector with Alarm and Voice Identifier according to the invention.

FIG. **2** is a sketch of a preferred embodiment of the electronic circuitry for the interconnected system embodiment of the Environmental Condition Detector with Alarm and Voice Identifier according to the invention.

FIG. **3** is a sketch of a second preferred embodiment of the electronic circuitry for the interconnected system embodiment of the Environmental Condition Detector with Alarm and Voice Identifier according to the invention.

FIG. **4** shows an example audible tonal pattern alarm and recorded voice message combination used for the Environmental Condition Detector with Alarm and Voice Identifier configured as a smoke detector and using a recorded voice message as an environmental condition type identifier according to the invention.

FIG. **5** shows an example audible tonal pattern alarm and recorded voice message combination used for the Environmental Condition Detector with Alarm and Voice Identifier configured as a smoke detector using a recorded voice message as an environmental condition location identifier according to the invention.

FIG. **6** shows an example audible tonal pattern alarm and recorded voice message combination used for the Environmental Condition Detector with Alarm and Voice Identifier configured as a carbon monoxide detector and using a recorded voice message as an environmental condition type identifier and location identifier according to the invention.

FIG. **7** shows one method for the user to select the installation location coding of the Environmental Condition Detector with Alarm and Voice Identifier according to the invention.

DETAILED DESCRIPTION OF THE INVENTION

A preferred embodiment of the Environmental Condition Detector with Alarm and Voice Identifier **6** is shown in FIG. **1**. The unit is powered by a battery **40** and/or by standard 120 VAC (not shown). The environmental condition sensor and alarm unit **10** (conventional smoke detector, carbon monoxide detector, combination smoke detector and carbon monoxide detector, natural gas detector, propane detector, abnormal temperature etc.) is any sensor type(s) utilizing environmental detection methods and alarm devices typically known in the art of smoke detectors, carbon monoxide detectors and other hazard detectors. Upon sensing the environmental condition, the environmental condition sensor and alarm unit **10** sounds its tonal pattern alarm to indicate that an environmental condition has been sensed in the immediate area. The alarm pattern is a prescribed audible tonal pattern alarm corresponding to the environmental condition as set forth by the empowered governing body (National Fire Protection Association, Underwriters Laboratories etc.). The interface and control unit **20** electronically interfaces with the environmental condition sensor and alarm unit **10** and controls the timing of a recorded voice message that is emitted simultaneously with the audible tonal pattern alarm such that the recorded voice message is emitted only during the period when the audible tonal pattern alarm cycles through a silent period. In one embodiment, an electronic signal frequency counter (not shown) is used to determine when the silent period of the audible alarm is occurring. The recorded voice message or synthesized human voice message is factory-recorded on an electronic storage media **30** such as, but not limited to, a ROM device. The recorded voice message is emitted through a speaker or other audio transducer **70**. For the embodiments of the invention requiring identification of the location of the environmental condition detector sensing the environmental condition, a selectable coding apparatus **50** (jumper selector or DIP switch) which connects to the interface and control unit **20** is provided to select one of several predefined physical locations of the environmental condition detectors within a residence. Recorded voice messages to identify physical locations consistent with the position of the selectable coding apparatus **50** are stored on the electronic storage media **30**. The selectable coding apparatus **50** is set to correspond to the location within the dwelling where the particular environmental condition detector **6** is installed. A language code selector (jumper set or DIP switch) **60** is used to choose the language type (English, Spanish, etc.) used by the recorded voice. For interconnected 120 VAC units, when one environmental condition detector sounds its tonal pattern alarm and recorded voice message, all interconnected units will sound identical tonal pattern alarms and recorded voice messages in temporal phase. For the environmental condition detection system embodiment, an interconnecting, conductor set **80** sends and receives a coded electrical signal encoded and decoded by the interface and control unit **20** by the sending and receiving detector, respectively. The coding of the signal sent over the interconnecting conductor set determines what specific recorded voice message is played from the electronic storage media **30** at the interconnected but remotely located environmental condition detectors. Another embodiment of the invention shown in FIG. **3** uses several interconnection conductors which alleviates the need for electrical encoding and decoding of the signal sent and received over the interconnecting conductor set **80**.

Shown in FIG. **2** is a sketch of a preferred embodiment of the electronic circuitry for one detector unit of the interconnected system embodiment of the Environmental Condition Detector with Alarm and Voice Identifier. The environmental condition sensor and alarm unit **10** connects to the interface and control unit **20** to trigger the monostable multivibrator **21** for a predetermined period of time when an environmental condition is detected. The monostable multivibrator **21** enables the signal encoder **22** to send a coded electrical signal to the local signal decoder **23** and to all other signal decoders of interconnected detectors hardwired linked together through the conductor set **80** shown in FIG. **1**. Upon receiving a local or remote encoded signal, the signal decoder **23** decodes the signal and validates or rejects the signal. Upon validation of a received signal, within each interconnected detector, the signal decoder **23** enables and addresses the electronic voice memory integrated circuit **31** to emit a recorded voice message verbally describing the location or type, or both, of the environmental condition sensed. All recorded voice messages emitted by the interconnected detector units connected through the conductor set **80** via electrical conductor connector **37** are in temporal phase. A selectable coding apparatus of switches or jumpers **51** defines the physical installation location of each environmental condition detector through pre-defined location designations illustrated in FIG. **7**. A language selector switch

apparatus **60** is used to select which language is used during the playing of the recorded voice messages. The recorded voice message is played through a speaker **70**.

Shown in FIG. **3** is a sketch of a second preferred embodiment of the electronic circuitry for one detector unit for the interconnected system embodiment of the Environmental Condition Detector with Alarm and Voice Identifier. The environmental condition sensor and alarm unit **10** connects to the interface and control unit **20** to trigger the monostable multivibrator **21** for a predetermined period of time when an environmental condition is detected. The monostable multivibrator **21** enables the electronic voice memory integrated circuit **31** to emit a recorded voice message verbally describing the location or type, or both, of the environmental condition sensed. All detector units within the interconnected system share common electrical connection to the address bits on each detector unit's electronic voice memory integrated circuit **31** through a multiple conductor connector interface **35** which results in all detector units emitting identical recorded voice messages in temporal phase. A selectable coding apparatus of switches or jumpers **52** defines the physical installation location of each environmental condition detector through pre-defined location designations illustrated in FIG. **7**. A language selector switch apparatus **60** is used to select which language is used during the playing of the recorded voice messages. The recorded voice message is played through a speaker **70**.

Shown in FIG. **4** is an example alarm timing plot of the sound emitted **82** by an environmental condition detector using both an audible tonal pattern alarm **85** and a recorded voice message **90** to convey information about the specific environmental condition detected. In the example exhibited in FIG. **2**, the environmental condition detector embodiment is a smoke detector using voice as an environmental condition type identifier only. The recorded voice message **90** is inserted into the defined silence periods of the prescribed audible tonal pattern alarm **85** consistent with conventional smoke detector alarms.

Shown in FIG. **5** is an example alarm timing plot of the sound emitted **92** by an environmental condition detector using an audible tonal pattern alarm **95** to convey the specific type of environmental condition and a recorded voice message **100** to convey the location of the detected environmental condition. In the example exhibited in FIG. **5**, the environmental condition detector embodiment is a smoke detector using voice as an environmental condition location identifier only. The recorded voice message **100** is inserted into the defined silence periods of the prescribed audible tonal pattern alarm **95** consistent with conventional smoke detector alarms.

Shown in FIG. **6** is an example alarm timing plot of sound emitted **102** by an environmental condition detector using an audible tonal pattern alarm **105** and a recorded voice message **110** to convey the specific type of environmental condition detected and the location of the environmental condition detector sensing the environmental condition. In the example exhibited in FIG. **6** the environmental condition detector embodiment is a carbon monoxide detector using voice as both an environmental condition type identifier and location identifier. The recorded voice message **110** is inserted into the defined silence periods of the prescribed audible tonal pattern alarm **105** consistent with conventional carbon monoxide alarms. The example tonal pattern alarms and recorded voice messages are illustrative and not intended to provide an exhaustive exhibit of all possible tonal alarm patterns and recorded voice messages.

Shown in FIG. **7** is a selectable coding apparatus **115** for the user to select one of the pre-defined locations of the Environmental Condition Detector with Alarm and Voice Identifier embodiment when and where it is installed in a dwelling. Selectable coding means such as a jumper **117** on DIP header pins **120** or DIP switches (not shown) are simple methods to define the installation location of a detector embodiment. Typical dwelling locations are shown in FIG. **7** and are not intended to exhibit an exhaustive list.

The various preferred embodiments described above are merely descriptive of the present invention and are in no way intended to limit the scope of the invention. Modifications of the present invention will become obvious to those skilled in the art in light of the detailed description above, and such modifications are intended to fall within the scope of the appended claims.

What is claimed is:

1. An environmental condition sensor using pre-recorded voice messages to indicate the specific type of environmental condition detected in a dwelling comprising:

(a) at least one sensor for detecting the presence of an environmental condition in the dwelling, wherein said sensor comprises a type selected from the group including a smoke detector type, a carbon monoxide detector type, a natural gas detector type, a propane detector type, and any multiple combination of these environmental condition detector types;

(b) an electronic storage device for storing at least one user unalterable pre-recorded voice message which represents the type of the environmental condition;

(c) a selecting device for a user to select a language type for the user unalterable pre-recorded voice message;

(d) an electronic circuit coupled to the sensor, and the devices for activation of an alarm having user unalterable, prescribed groups of pulsating audible tonal patterns for the duration of the detection of said environmental condition, wherein groups of patterns are spaced apart by predetermined silent periods, wherein said electronic circuit repeatedly emits a selected language type of said pre-recorded user unalterable voice message which represents the specific type of detected environmental condition for the duration of the detection of said environmental condition such that said voice message is repeatedly emitted during at least some of said silent periods;

(e) a power source input coupled to said circuit and selected from a group including a battery input, an AC input, and an AC with a battery back-up input; and

(f) a housing which carries said sensor, said electronic circuit, said electronic storage device, said selecting device, and said power source input.

2. An environmental condition sensor using pre-recorded voice messages to indicate the specific location of environmental condition detected in a dwelling comprising:

(a) at least one sensor for detecting the presence of an environmental condition in the dwelling, wherein said sensor comprises a type selected from the group including a smoke detector type, a carbon monoxide detector type, a natural gas detector type, a propane detector type, and any multiple combination of these environmental condition detector types;

(b) an electronic storage device for storing user unalterable pre-recorded voice messages; wherein each message represents a different location of detected environmental condition;

(c) a selecting device for a user to select one of the pre-recorded voice messages to represent the location of said environment sensor;

(d) an electronic circuit coupled to said at least one sensor, and the devices for activation of an alarm having user unalterable prescribed groups of pulsating audible tonal patterns for the duration of the detection of said environment condition, wherein groups of patterns are spaced apart by predetermined silent periods, wherein said electronic circuit repeatedly emits selected pre-recorded user unalterable voice messages that verbally describe the location of the detected environmental condition for the duration of detection thereof such that said selected pre-recorded voice message is repeatedly emitted during at least some of said silent periods;

(e) a power source input, coupled to said circuit, selected from a group which includes a battery input, an AC input, and an AC with a battery back-up input; and

(f) a housing which carries said sensor, said electronic circuit, said electronic storage device, said selecting device, and said power input.

3. The environmental condition sensor of claim **2** wherein said electronic circuit to play said pre-recorded voice messages has further means to provide for the selection of language type presentation of said pre-recorded voice messages.

4. An environmental condition sensor using pre-recorded voice messages to indicate the specific type and location of environmental condition detected in a dwelling comprising:

(a) at least one sensor for detecting the presence of an environmental condition in the dwelling, wherein said sensor comprises a type selected from the group including a smoke detector type, a carbon monoxide detector type, a natural gas detector type, a propane detector type, and any multiple combination of these environmental condition detector types;

(b) an electronic storage device for storing user unalterable pre-recorded voice messages, wherein said messages include different locations and types of detected environmental conditions;

(c) a selecting device for a user to select one of the pre-recorded voice messages to represent the location of said environmental sensor;

(d) an electronic circuit, coupled to said at least one sensor and the devices for activation of an alarm having user unalterable prescribed groups of pulsating audible tonal patterns for the duration of the detection of said environmental condition, wherein groups of patterns are spaced apart by predetermined silent periods, wherein said electronic circuit repeatedly emits voice messages representing the type of detected condition during at least some of said silent periods and then repeatedly emits other voice messages representing the location of the sensor during the same silent periods; wherein said prescribed groups of pulsating audible tonal patterns are interleaved with said pre-recorded voice messages;

(e) a power source input coupled to said circuit and selected from a group including a battery input, an AC input, and an AC with a battery back-up input; and

(f) a housing which carries said sensor, said electronic circuit, said electronic storage device, said selecting device, and said power source input.

5. The environmental condition sensor of claim **4** wherein said electronic circuit to play said pre-recorded voice messages has further means to provide for the selection of language type presentation of said pre-recorded voice messages.

6. An environmental condition detection system using pre-recorded voice messages to indicate the specific type of an environmental condition detected in a dwelling comprising;

(a) at least two environmental condition detectors, each detector comprising at least one sensor for detecting the presence of an environmental condition in said dwelling, wherein said sensor comprises a type selected from the group including a smoke detector type, a carbon monoxide detector type, a natural gas detector type, a propane detector type, and any multiple combination of these environmental condition detector types;

(b) each environmental condition detector comprising a selecting device for a user to select a language type for a user unalterable pre-recorded voice message;

(c) each environmental condition detector comprising an electronic circuit, coupled to a respective device, for activation of an audible alarm having user unalterable prescribed groups of pulsating audible tonal patterns for the duration of the detection of said environmental condition, wherein groups of patterns are spaced apart by predetermined silent periods; said electronic circuit comprising an electronic device for storing pre-recorded voice messages representative of the type of environmental condition;

(d) wherein each said electronic circuit repeatedly emits a selected language type of said pre-recorded voice messages that verbally describe the type of said detected environmental condition for the duration of the detection thereof such that said pre-recorded voice messages are emitted during at least some of said silent periods;

(e) each environmental condition detector comprising direct hardwired interconnection terminals for electrically linking a plurality of like environmental condition detectors such that the detection of said environmental condition by one detector causes all other hardwired interconnected detectors to emit the same tonal pattern alarm and same pre-recorded voice messages emitted by said environmental condition detector sensing said environmental condition;

(f) each environmental condition detector comprising a power source input, coupled to the circuit selected from a group including of a battery input, an AC input, and an AC with a battery back-up power input; and

(g) each environmental condition detector comprising a housing for carrying its respective sensor, electronic circuit, electronic storage device, selecting device, and power source input.

7. An environmental condition detection system using pre-recorded voice messages to indicate the specific location of an environmental condition detected in a dwelling comprising:

(a) at least two environmental condition detectors, each detector comprising at least one sensor for detecting the presence of an environmental condition in the dwelling, wherein said sensor comprises a type selected from the group including a smoke detector type, a carbon monoxide detector type, a natural gas detector type, a propane detector type, and any multiple combination of these environmental condition detector types;

(b) each environmental condition detector comprising a selecting device for a user to select one of a plurality of user unalterable pre-recorded voice messages, each represents a location for said environmental sensor;

(c) each environmental condition detector comprising an electronic circuit, coupled to a respective sensor and a respective device for activation of an audible alarm having user unalterable prescribed groups of pulsating audible tonal patterns for the duration of the detection

of said environmental condition, wherein groups of patterns are spaced apart by predetermined silent periods, said electronic circuit comprising an electronic device for storing pre-recorded voice messages representative of different locations of the environmental condition sensor;

(d) wherein each said electronic circuit repeatedly emits the selected one of the pre-recorded voice messages that verbally describe the location of said environmental condition for the duration of the detection thereof such that said pre-recorded voice messages are emitted during at least some of said silent periods;

(e) each environmental condition detector comprising direct hardwired interconnection terminals for electrically linking a plurality of like environmental condition detectors such that the detection of said environmental condition by one detector causes all other hardwired interconnected detectors to emit the same tonal pattern alarm and same pre-recorded voice messages emitted by said environmental condition detector sensing said environmental condition;

(f) each environmental condition detector comprising a power source input coupled to the circuit, selected from a group including a battery input, an AC input, and an AC with a battery back-up power supply input; and

(g) each environmental condition detector comprising a housing for carrying its respective sensor, electronic circuit, electronic storage device, selecting device, and power source input.

8. The environmental condition detection system of claim **7** wherein said electronic circuit to play said pre-recorded voice messages has further means to provide for the selection of language type presentation of said pre-recorded voice messages.

9. A self-contained environmental condition detector comprising:

at least one ambient condition sensor wherein said at least one sensor comprises a type selected from a group including a smoke sensor type, a carbon monoxide sensor type, a natural gas sensor type, a propane sensor type, and any multiple combination of these environmental condition sensor types;

a control element coupled to said at least one sensor, wherein the control element includes circuitry for detecting a first alarm condition;

a selecting element, coupled to the control element, for a user to select a language type for a user unalterable pre-recorded voice message;

an alarm indicating audible output device coupled to the control element wherein the control element, in response to the first alarm condition, drives the output device to emit at least one set of alarm patterns, wherein each pattern has a preset number of pulsating alarm tones, each alarm pattern is spaced apart by a first silent time interval from the next pattern and wherein pulsating tones in a pattern are spaced apart from one another by a second time interval;

voice circuit for storing at least a first, user unalterable, predetermined verbal, alarm-type output message, coupled to the control element and associated with said at least one sensor, wherein the circuit, in response to the presence of a first detected alarm condition, injects the verbal, alarm-type output message in the selected language type repetitively, only into the first intervals; and

a housing for carrying said sensor, said control element, said alarm device, said voice circuit.

10. A detector comprising:

a housing;

a fire sensor and a gas sensor, both carried by the housing;

a control element coupled to the sensors wherein the element includes circuitry for detecting a fire alarm and for detecting a gas alarm;

an alarm indicating audible output device coupled to the control element wherein the control element in response to a fire alarm drives the output device to repetitively emit interrupted groups of fire alarm tones wherein the members of the groups are spaced apart from one another by a first time interval and each member has a width corresponding to the first time interval and wherein groups are spaced apart by silent, longer second time intervals, and wherein the control circuit in response to a gas alarm drives the output device to repetitively emit different, interrupted groups of gas alarm tones wherein the members of the groups are spaced apart from one another by a third time interval and wherein groups are spaced apart by silent, longer, fourth time intervals;

a voice output circuit coupled to the control element, wherein the voice output circuit includes storage for at least a word indicative of a fire alarm and storage for at least a phrase indicative of a gas alarm, wherein in response to a fire alarm the output circuit injects the stored fire alarm indicating word into only the second time intervals between groups of fire alarm tones and wherein in response to a gas alarm the output circuit injects the stored gas alarm indicating phrase into only the fourth time intervals;

wherein the tonal patterns and output word and phrase are predefined and not user alterable; and

wherein the voice output circuit includes an audio output transducer.

11. A method for providing environmental condition detection for a dwelling comprising:

(a) providing an environmental condition detection system to a dwelling, said dwelling comprising one or more distinctive regions selected from the group consisting of rooms, floor levels, areas, closets, attics, basements, passages, hallways, stairways, crawlspaces, garages, and any multiple combination thereof,

(b) setting a selectable coding means to define the detector installation location, within said dwelling, for each detector comprising said environmental condition detection system to cause the detector sensing an environmental condition to play a user unalterable pre-recorded voice message, which verbally describes said detector installation location of said detector sensing an environmental condition, during the periods of silence in a prescribed audible tonal pattern alarm emitted by said detector sensing an environmental condition simultaneously with said pre-recorded voice message for the duration of said environmental condition,

(c) interconnecting a minimum of two environmental condition detectors forming said environmental condition detection system such that the tonal pattern alarm and pre-recorded voice messages emitted by one environmental condition detector sensing an environmental condition causes all other interconnected detectors to emit the same tonal pattern alarm and pre-recorded voice message as those emitted by said environmental condition detector sensing said environmental condition.

12. The method of claim 11 wherein said method comprises playing a pre-recorded voice message that verbally describes the type of environmental condition detected for the duration of the detection of the said environmental condition such that said pre-recorded voice message is emitted during periods of silence in said prescribed audible tonal pattern alarm emitted simultaneously.

13. The method of claim 11 wherein said method comprises providing an environmental condition detector type selected from the group consisting of a smoke detector type, a carbon monoxide detector type, a natural gas detector type, a propane detector type, and any multiple combination of these environmental condition detector types.

14. A self-contained ambient condition detector comprising:

first and second, different, ambient condition sensors;

control electronics coupled to the sensors wherein the electronics emits at least two, different, unalterable pre-stored alarm indicating tonal, output patterns wherein each pattern includes predetermined silent intervals and each is associated with a respective one of the sensors;

voice output circuitry, coupled to the electronics, wherein the voice circuitry includes at least two pre-stored, user unalterable, verbal alarm output messages wherein each of the pre-stored messages is associated with a respective one of the tonal output patterns and verbalizes the respective alarm type and wherein the control electronics, in response to a detected alarm condition, outputs an audio representation of a respective one of the tonal patterns and an interleaved respective verbal alarm type message in a respective silent interval; and

a common housing for the sensors, the electronics and the output circuitry.

15. A detector as in claim 14 wherein one of the sensors is a smoke sensor and the respective, prestored verbal message is a fire alarm to reinforce the respective tonal output pattern indicative of a fire alarm.

16. A detector as in claim 15 wherein the other sensor is a carbon monoxide sensor and the respective pre-stored verbal message is a carbon monoxide alarm to reinforce the respective tonal output pattern, indicative of a carbon monoxide alarm.

17. A detector as in claim 16 wherein at least one tonal output pattern defines groups of three substantially identical output tones with constant intragroup spacing of a first amount and constant intergroup spacing of a second amount wherein another tonal output pattern defines groups of four substantially identical output tones with constant intragroup spacing of a third amount and constant intergroup spacing of a fourth amount.

18. A detector as in claim 17 wherein each tone of one tonal pattern has a duration on the order of 0.5 seconds.

19. A detector as in claim 14 wherein each tonal output pattern defines groups of substantially identical output tones with constant intragroup spacing of a first amount and constant intergroup spacing of a second amount wherein the second amount is at least two times than the first amount.

20. A detector as in claim 19 wherein one tonal pattern has an intragroup spacing on the order of 0.5 seconds and an intergroup spacing on the order of 1.5 seconds.

21. A self-contained ambient condition detector comprising:

a fire sensor and a gas sensor;

control electronics coupled to the sensors wherein the electronics emits at least first and second, different, unalterable pre-stored alarm indicating tonal, output patterns wherein each pattern includes groups of spaced apart tones separated by longer intergroup silent intervals and wherein each output pattern is associated with a respective one of the sensors;

voice output circuitry, coupled to the electronics, wherein the voice circuitry includes at least two pre-stored, user unalterable, verbal alarm output messages wherein each of the pre-stored messages is associated with a respective one of the tonal output patterns and verbalizes the respective alarm type and wherein the control electronics, in response to a detected alarm condition, outputs an audio representation of a respective one of the tonal patterns and an interleaved respective verbal alarm type message in a respective intergroup silent interval; and

a common housing for the sensors, the electronics and the output circuitry.

22. A detector as in claim 21 wherein the first tonal output pattern, associated with the fire sensor, comprises a selected number of tones in each group with intragroup tonal spacing less than 50% of the respective intergroup silent interval and wherein the second tonal output pattern, associated with the gas sensor, comprises a greater number of tones in each group than the selected number of tones.

* * * * *

UNITED STATES PATENT AND TRADEMARK OFFICE

CERTIFICATE OF CORRECTION

PATENT NO. : 6,144,310
DATED : November 7, 2000
INVENTOR(S) : Gary Jay Morris

It is certified that error appears in the above-identified patent and that said Letters Patent is hereby corrected as shown below:

Column 14,
Line 11, please insert -- greater -- after "times".

Signed and Sealed this

Twenty-sixth Day of August, 2003



JAMES E. ROGAN
Director of the United States Patent and Trademark Office

US006600424B1

(12) **United States Patent**
Morris

(10) **Patent No.: US 6,600,424 B1**
(45) **Date of Patent: Jul. 29, 2003**

(54) **ENVIRONMENT CONDITION DETECTOR WITH AUDIBLE ALARM AND VOICE IDENTIFIER**

(76) Inventor: **Gary Jay Morris**, 2026 Glenmark Ave., Morgantown, WV (US) 26505

(*) Notice: Subject to any disclaimer, the term of this patent is extended or adjusted under 35 U.S.C. 154(b) by 0 days.

(21) Appl. No.: **09/651,454**

(22) Filed: **Aug. 30, 2000**

Related U.S. Application Data

(63) Continuation of application No. 09/299,483, filed on Apr. 26, 1999, now Pat. No. 6,144,310.
(60) Provisional application No. 60/117,307, filed on Jan. 26, 1999.

(51) **Int. Cl.**[7] **G08B 17/10**
(52) **U.S. Cl.** **340/628**; 340/539.22; 340/539.26; 340/577; 340/632; 340/692; 340/693.11
(58) **Field of Search** 340/628, 692, 340/505, 506, 577, 632, 693.11, 539, 517, 520, 521, 522, 523, 524, 531, 532, 533, 534, 540, 584, 605, 691.1, 691.4, 693.5, 693.6, 693.7, 693.9, 286.01, 286.05, 286.11, 328, 329, 386.1, 384.3, 384.4, 384.73

(56) **References Cited**

U.S. PATENT DOCUMENTS

3,906,491 A 9/1975 Gosswiller et al.
4,101,872 A 7/1978 Pappas
4,141,007 A 2/1979 Kavasilios et al.
4,160,246 A 7/1979 Martin et al.
4,275,274 A 6/1981 English
4,282,519 A 8/1981 Hagland et al.
4,288,789 A 9/1981 Molinick et al.
4,335,379 A 6/1982 Martin
4,343,990 A 8/1982 Ueda
4,350,860 A 9/1982 Ueda
4,351,999 A 9/1982 Nagamoto et al.
4,363,031 A 12/1982 Reinowitz
4,365,315 A 12/1982 Jamnik
4,366,873 A 1/1983 Levy et al.

(List continued on next page.)

FOREIGN PATENT DOCUMENTS

WO WO 90/01759 2/1990

OTHER PUBLICATIONS

*National Fire Protection Association—NFPA72—National Fire Alarm Code 1996 Edition pp. 72 through 106. Quincy, MA USA.
*NFPA 720, Recommended Practice for the Installation of Household Carbon Monoxide (CO) Warning Equipment 1998 Edition.
UL 217 ISBN 0–7629–0062–8, Single and Multiple Station Smoke Alarms, Mar. 16,1998–Feb. 21, 1997; UL 2034 ISBN 0–7629–274–9, Single and Multiple Station Carbon Monoxide Alarms, Dec. 21, 1998–Oct. 29, 1996.

Primary Examiner—Nina Tong
(74) *Attorney, Agent, or Firm*—Welsh & Katz, Ltd.

(57) **ABSTRACT**

Due to the presence of various environmental condition detectors in the home and businesses such as smoke detectors, carbon monoxide detectors, natural gas detectors, etc., each having individual but similar sounding alarm patterns, it can be difficult for occupants of such dwellings to immediately determine the specific type of environmental condition that exists during an alarm condition. The present invention comprises an environmental condition detector using both tonal pattern alarms and pre-recorded voice messages to indicate information about the environmental condition being sensed. Single-station battery-powered and 120VAC detectors are described as are multiple-station interconnected 120VAC powered detectors. The pre-recorded voice messages describe the type of environmental condition detected or the location of the environmental condition detector sensing the condition, or both, in addition to the tonal pattern alarm. Provisions are made for multi-lingual pre-recorded voice messages.

41 Claims, 5 Drawing Sheets

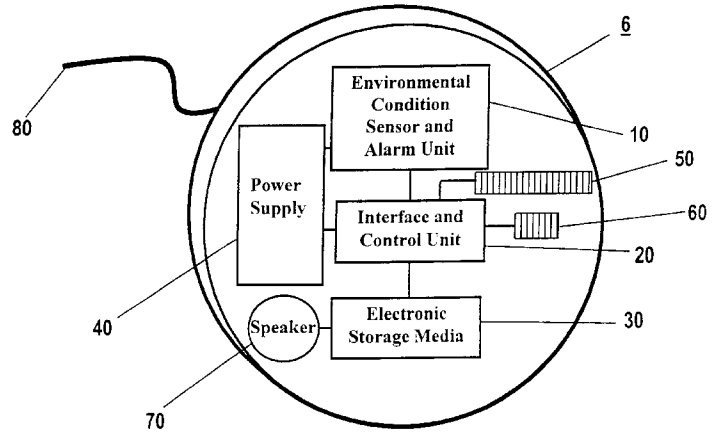

U.S. PATENT DOCUMENTS

4,375,329	A	3/1983	Park
4,389,639	A	6/1983	Torii et al.
4,400,786	A	8/1983	Mandei et al.
4,453,222	A	6/1984	Gosyk
4,455,551	A	6/1984	Lemelson
4,481,507	A	11/1984	Takiguchi et al.
4,498,078	A	2/1985	Yoshimura et al.
4,500,971	A	2/1985	Futaki et al.
4,519,027	A	5/1985	Vogelsberg
4,531,114	A	7/1985	Topol et al.
4,560,978	A	12/1985	Lemelson
4,572,652	A	2/1986	Tada et al.
4,682,348	A	7/1987	Dawson et al.
4,688,021	A	8/1987	Buck et al.
4,698,619	A	10/1987	Loeb
4,754,266	A	6/1988	Shand et al.
4,810,996	A	3/1989	Glen et al.
4,816,809	A	3/1989	Kim
4,821,027	A	4/1989	Mallory et al.
4,851,823	A	7/1989	Mori
4,862,147	A	8/1989	Thomas
4,894,642	A	1/1990	Ashbaugh et al.
4,904,988	A	2/1990	Nesbit et al.
4,940,965	A	7/1990	Umehara
4,951,045	A	8/1990	Knapp et al.
4,988,980	A	1/1991	Graham
5,019,805	A	5/1991	Curl et al.
5,103,206	A	4/1992	Yu
5,117,217	A	5/1992	Nykerk
5,153,567	A	10/1992	Chimento
5,229,753	A	7/1993	Berg et al.
5,291,183	A	3/1994	Chiang
5,349,338	A	9/1994	Routman et al.
5,379,028	A	1/1995	Chung
5,460,228	A	10/1995	Butler
5,506,565	A	4/1996	Andrew de Leon et al.
5,548,276	A	8/1996	Thomas
5,587,705	A	12/1996	Morris
5,657,380	A	8/1997	Mozer
5,663,714	A	9/1997	Fray
5,673,023	A	9/1997	Smith
5,724,020	A	3/1998	Hsu
5,726,629	A	3/1998	Yu
5,764,134	A	6/1998	Carr et al.
5,786,749	A	7/1998	Johnson et al.
5,786,768	A	7/1998	Chan et al.
5,793,280	A	8/1998	Hincher
5,798,686	A	8/1998	Schreiner
5,841,347	A	11/1998	Kim
5,846,089	A	12/1998	Weiss et al.
5,856,781	A	1/1999	Michel et al.
5,864,288	A	1/1999	Hogan
5,874,893	A	2/1999	Ford
5,877,698	A	3/1999	Kusnier et al.
5,886,631	A	3/1999	Ralph
5,894,275	A	4/1999	Swingle
5,898,369	A	4/1999	Godwin
5,905,438	A	5/1999	Weiss et al.
5,914,650	A	6/1999	Segan
5,936,515	A	8/1999	Right et al.
5,986,540	A	11/1999	Nakagaki et al.
6,043,750	A	3/2000	Mallory
6,097,289	A	8/2000	Li et al.
6,114,967	A	9/2000	Yousif
6,121,885	A	9/2000	Masone et al.
6,144,310	A	11/2000	Morris
6,307,482	B1	10/2001	Le Bel

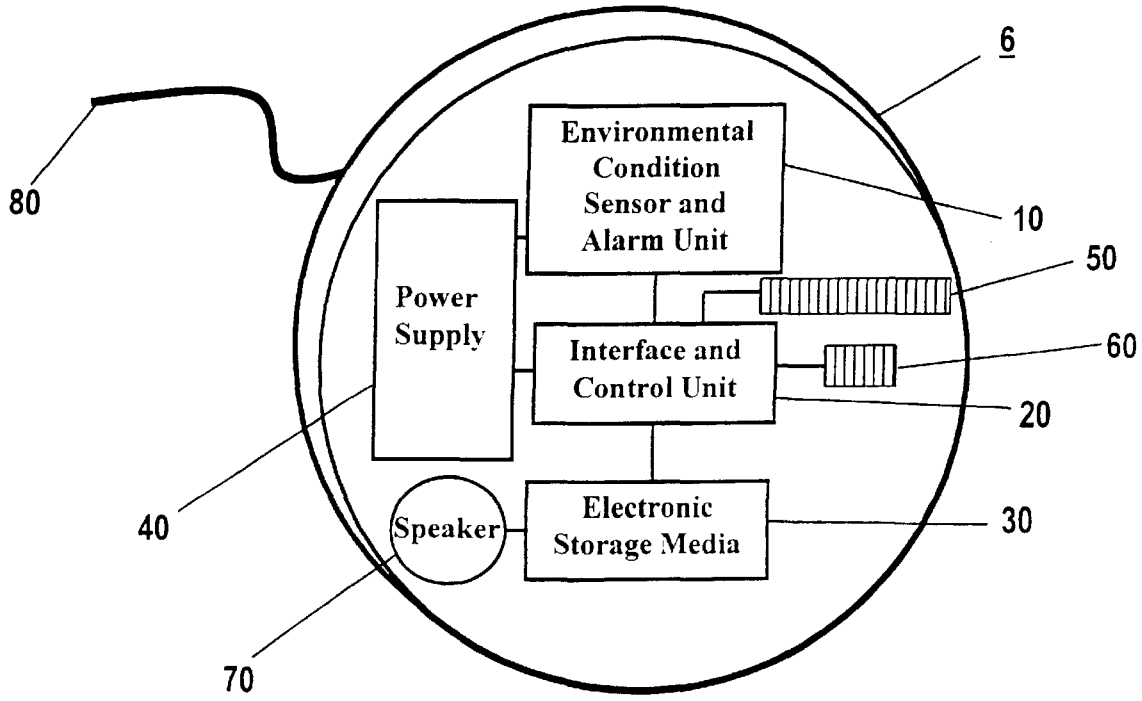
6
80
Environmental Condition Sensor and Alarm Unit
10
50
Power Supply
Interface and Control Unit
60
20
40
Speaker
Electronic Storage Media
30
70

Fig. 1

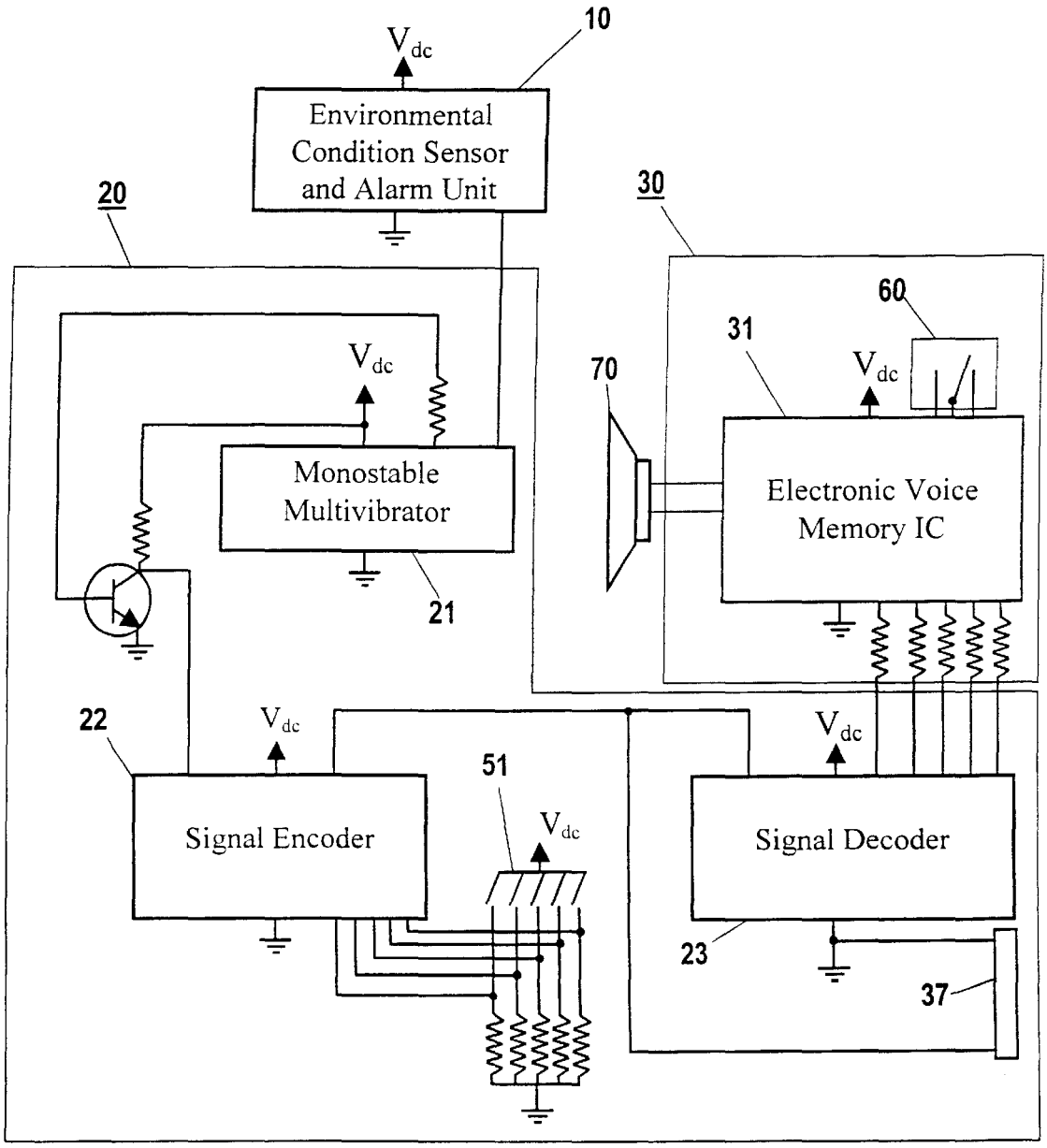
10
V_{dc}
Environmental Condition Sensor and Alarm Unit
20
30
60
31
V_{dc}
70
V_{dc}
Monostable Multivibrator
Electronic Voice Memory IC
21
22
V_{dc}
V_{dc}
51
V_{dc}
Signal Encoder
Signal Decoder
23
37

Fig. 2

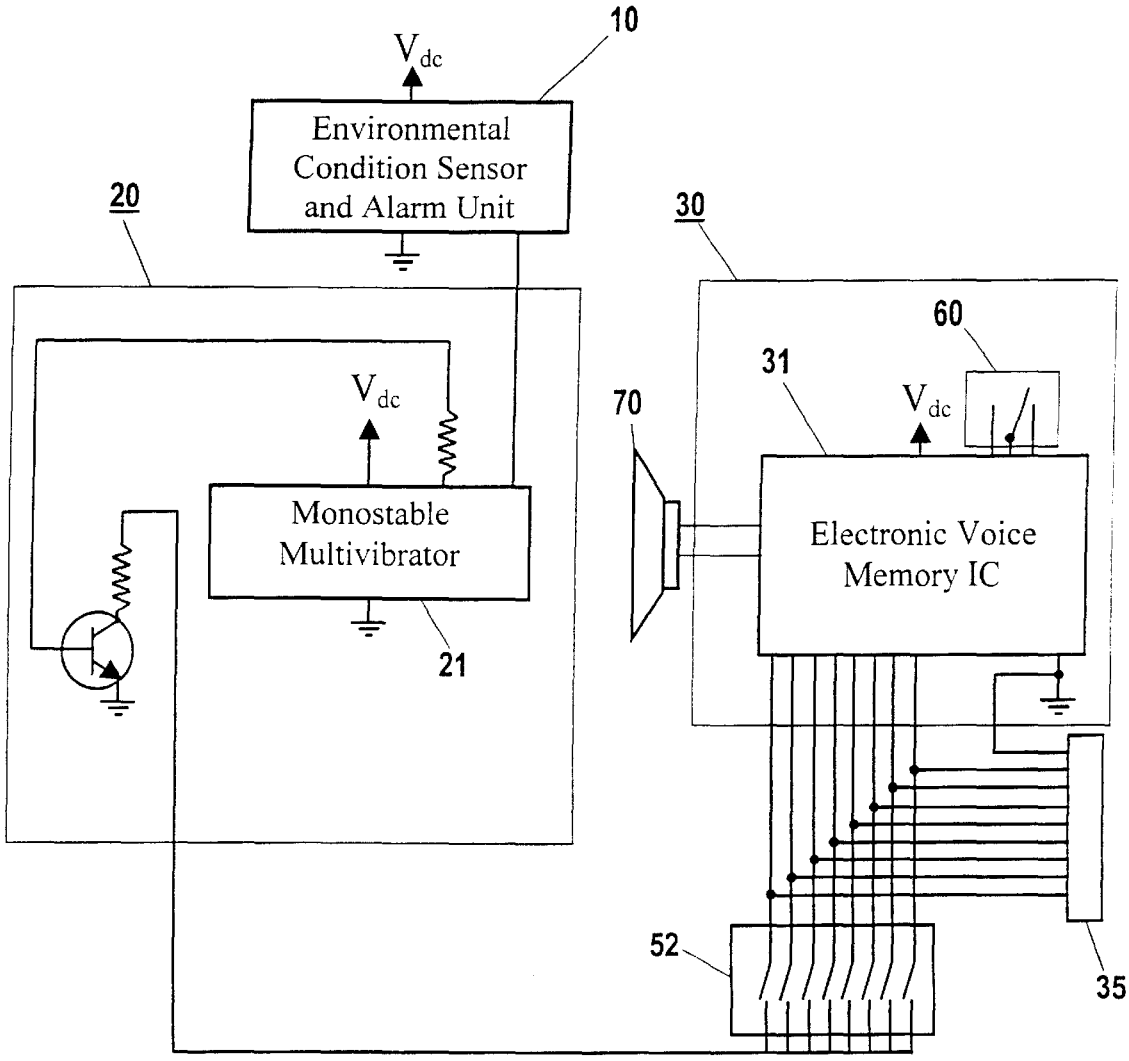
10
V_{dc}
Environmental
Condition Sensor
and Alarm Unit
20
30
60
31
V_{dc}
70
V_{dc}
Monostable
Multivibrator
Electronic Voice
Memory IC
21
52
35

Fig. 3

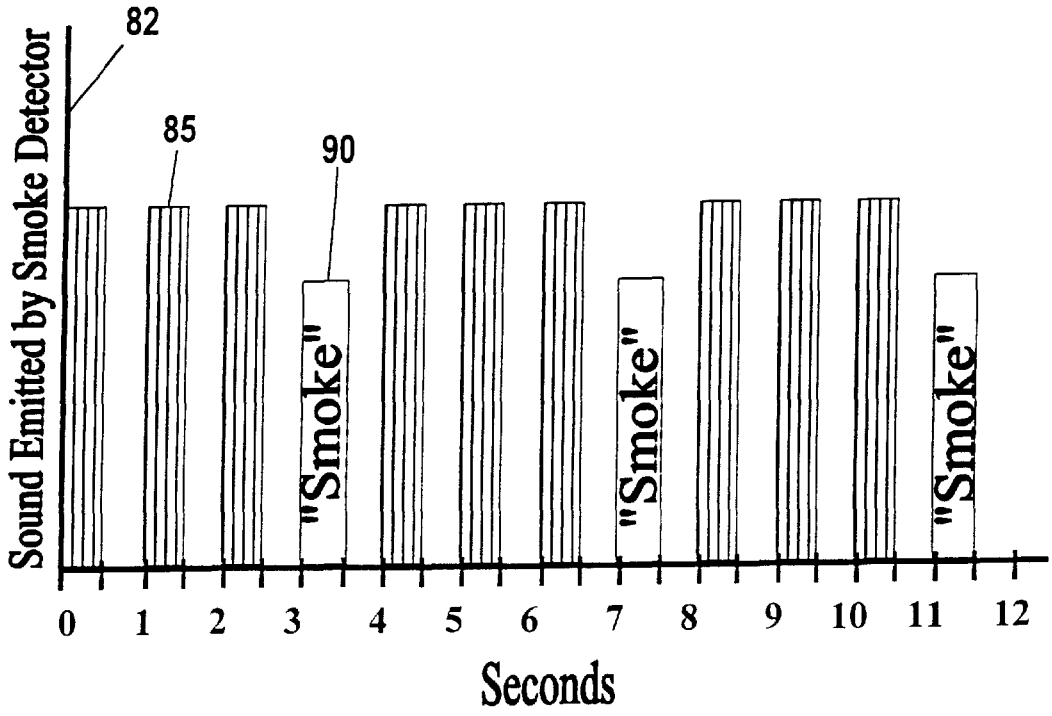
82
85
90
Sound Emitted by Smoke Detector
"Smoke"
"Smoke"
"Smoke"
0 1 2 3 4 5 6 7 8 9 10 11 12
Seconds

Fig. 4

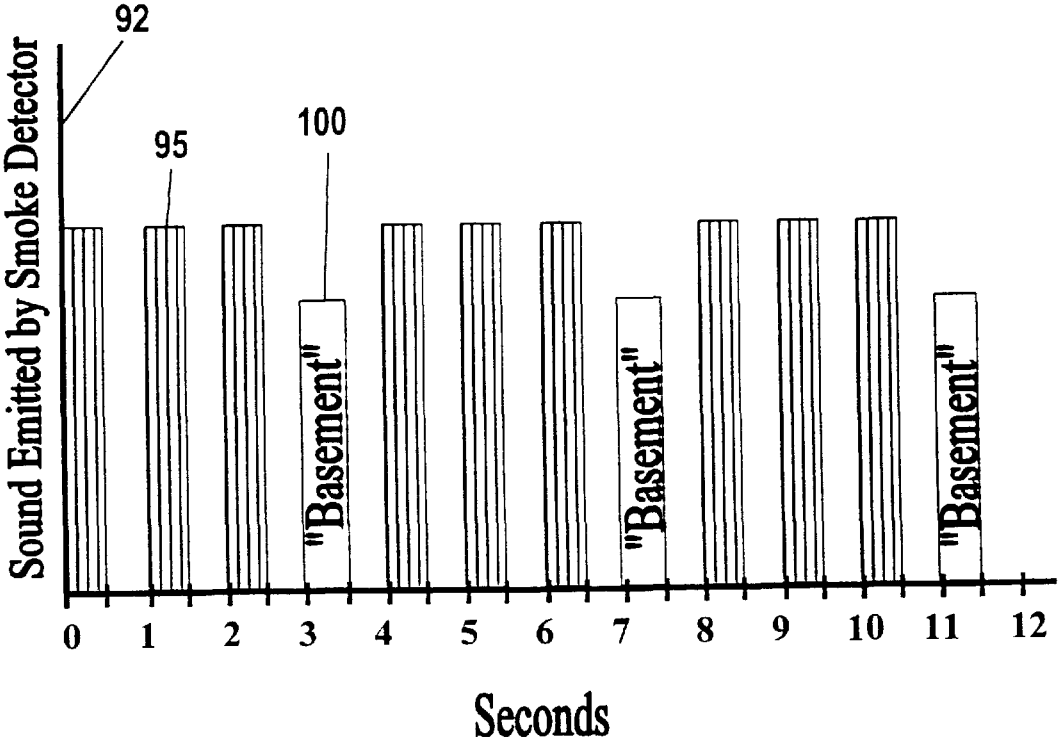
92
95
100
Sound Emitted by Smoke Detector
"Basement"
"Basement"
"Basement"
0 1 2 3 4 5 6 7 8 9 10 11 12
Seconds

Fig. 5

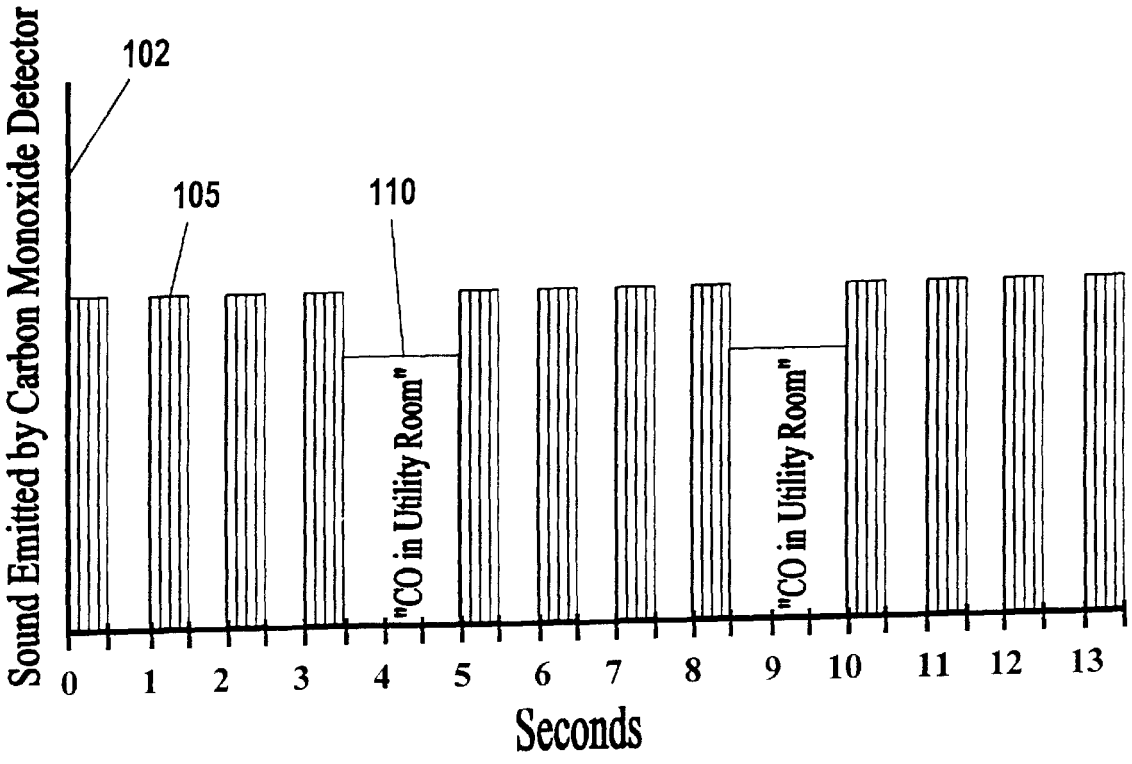
102
105
110
Sound Emitted by Carbon Monoxide Detector
"CO in Utility Room"
"CO in Utility Room"
0 1 2 3 4 5 6 7 8 9 10 11 12 13
Seconds

Fig. 6

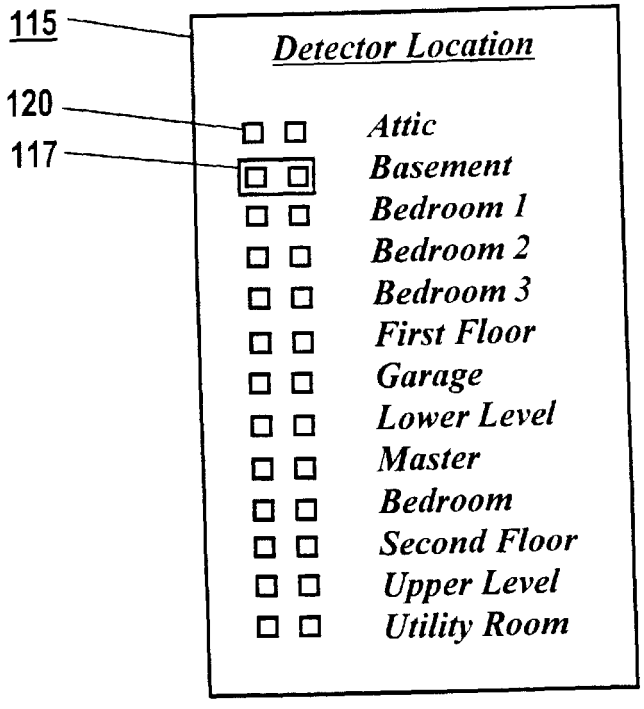
115
120
117
Detector Location
Attic
Basement
Bedroom 1
Bedroom 2
Bedroom 3
First Floor
Garage
Lower Level
Master
Bedroom
Second Floor
Upper Level
Utility Room

Fig. 7

ENVIRONMENT CONDITION DETECTOR WITH AUDIBLE ALARM AND VOICE IDENTIFIER

This application is a continuation and claims the benefit of the filing date of Ser. No. 09/299,483 filed Apr. 26, 1999, now U.S. Pat. No. 6,144,310 which claimed the benefit of Provisional Application Serial No. 60/117,307, filed Jan. 26, 1999 and Disclosure Document 415668.

BACKGROUND FOR THE INVENTION

1. Field of Invention

The present invention relates to environmental condition detection for dwellings including smoke detection, carbon monoxide gas detection, natural gas detection, propane gas detection, combination smoke and carbon monoxide gas detection, etc. such that the audible tonal pattern alarm emitted by a detector sensing an abnormal environmental condition is accompanied by a pre-recorded voice message that clearly indicates the specific type of condition sensed or the specific location of the detector sensing the condition, or both.

2. Background

With the widespread use of environmental condition detectors such as smoke detectors. carbon monoxide detectors, natural gas detectors, propane detectors, etc. in residences and businesses today, there is a critical need to provide definite distinction between the tonal pattern alarms emitted by each type of detector so that the occupants of the involved dwelling are immediately made aware of the specific type of condition detected along with its location so they can take the proper immediate action. Regulating and governing bodies for products of the home safety industry (National Fire Protection Association, Undewriters Laboratories, etc.) have recently regulated the tonal patterns emitted from such environmental detectors, however, much confusion still exists among the very similar tonal pattern alarms emitted by various detector types. This is particularly true for those individuals partially overcome by the environmental condition, those asleep when the alarm occurs, young children, or the elderly. Therefore, a need exists whereby the environmental detector sensing an abnormal condition plays a recorded voice message stating the specific condition and/or location of the condition in addition to the required tonal pattern alarm. In conventional smoke detectors and carbon monoxide detectors, there are silent periods within the prescribed audible tonal pattern alarms where recorded verbal messages such as "smoke" or "CO" or "carbon monoxide" or "smoke in basement" or "utility room" (as examples) may be played during this alarm silence period to clearly discriminate between the types of audible alarms and environmental conditions and where the environmental condition was detected. Such messages immediately provide the occupants in an involved dwelling important safety information during potentially hazardous environmental conditions. The occupants can make informed decisions about how to respond to the alarm condition. Occupants residing in the uninvolved area of the dwelling may choose to assist those residing in the involved area depending on the location and type of condition detected. The type of environmental condition sensed or the location of the condition, or both are immediately made clear through the use of recorded voice messages in addition to conventional tonal pattern alarms.

DISCUSSION OF PRIOR ART

While there are inventions in the prior art pertaining to emergency alarm systems utilizing verbal instructions, none

are known to the inventor which use a combination of tonal pattern alarms and factory pre-recorded voice messages with function or intent to clearly and specifically identify and clarify which type of environmental condition is present in a dwelling. Nor are there known inventions that use such pre-recorded voice messages to specifically identify the location of the environmental condition sensed by environmental condition detectors in dwellings without the use of a central control unit.

Morris (U.S. Pat. No. 5,587,705) describes a wireless smoke detector system using a minimum of two smoke detectors to indicate the location of the smoke detector sensing the smoke through coded alarm patterns. The present invention does not use wireless communication between detectors; each detector may operate without any others or may operate as a hardwired system with interconnected units for those powered by 120 VAC. Fray (U.S. Pat. No. 5,663,714) describes a warning system for giving user-recorded verbal instructions during a fire. Fray teaches an object of his invention is to warn individuals of the presence of smoke and fire and to provide verbal instructions and guidance as how to escape the hazard. Routman et al (U.S. Pat. No. 5,349,338) describe a fire detector and alarm system that uses personally familiar user-recorded verbal messages specifically for a small child or adult in need of verbal instructions during the presence of a fire. Chiang (U.S. Pat. No. 5,291,183) describes a multi-functional alarming system using a microphone to sense ambient conditions and user-recorded verbal instructions for indicating the way to escape a fire. Kim (U.S. Pat. No. 4,816,809) describes a speaking fire alarm system that uses a central control system with remote temperature sensors. Haglund et al (U.S. 4,282,519) describe a hardwired smoke detector system whereby two audible alarm codes are indicated to determine whether the smoke was detected locally or not. Only two possible alarm patterns are used and no voice message is used with Haglund's hardwired system. Molinick and Sheilds (U.S. Pat. No. 4,288,789) describe an oral warning system for monitoring mining operations that uses a plurality of non-emergency condition sensors and second sensors for detecting emergencies. The patent further describes the use of a single and system-central multiple-track magnetic tape player for storing the verbal messages and links the alarm system to control the operation of mechanical devices (mining conveyor belts, etc.) during emergency conditions when verbal messages are played.

Additionally, Morris (U.S. Pat. No. 5,587,705), Fray (U.S. Pat. No. 5,663,714), Routman et al (U.S. Pat. No. 5,349,338), Chaing (U.S. Pat. No. 5,291,183), Kim (U.S. Pat. No. 4,816,809), and Haglund et al (U.S. Pat. No. 4,282,519) do not recite the specific use of factory pre-recorded voice messages to indicate the specific location of the environmental condition, or the use of voice messages to identify the specific type of environmental condition detected, or the use of a plurality of interconnected detectors emitting identical verbal messages, or a selectable means to define the installation location of the detector, all of which are taught in the present invention and afford significant safety advantages. While Molinick and Shields (U.S. Pat. No. 4,288,789) refer to verbally describing an emergency condition in mining operations, their patent teaches of a much more complex system than the present invention and describes a central control system with multiple stages of various configuration sensors and the use of user-recorded voice messages. Furthermore, the patent does not describe a selectable coding means to define the installation location of the sensors.

All known prior art providing user-recorded verbal instructions on how to escape a hazardous condition has become impractical for use in dwellings in view of the recent National Fire Protection Association (NFPA) and Underwriters Laboratories (UL) regulations that require a maximum silence period between tonal alarm patterns of 1.5 seconds (Ref. UL2034, UL217, NFPA72 and NFPA720). This period of time is sufficient for the present invention to verbally indicate the type and location of the sensed environmental condition but is unlikely to be useful to provide detailed instructions, as taught in the prior art, to occupants on how to respond to a hazardous condition.

The present invention employs either single station environmental condition detectors or a system comprising direct, hardwired communication links between a plurality of environmental condition detectors to provide a tonal pattern alarm with pre-recorded voice message information regarding the specific type of environmental condition detected or the specific location of the detector sensing the environmental condition, or both, all without the need of a centralized control unit. For detector embodiments using pre-recorded voice messages to indicate the location of the detected condition, each detector is set-up by the user during installation to define the physical location of the detector within the dwelling according to pre-defined location definitions pre-programmed into the electronic storage media. The recorded voice messages are pre-recorded into the electronic storage media during manufacture and are not normally changeable by the user. In view of the recent National Fire Protection Association and Underwriters Laboratories regulations for tonal pattern alarms, it is not practical to have the user record their own sounds during the silent periods of the tonal pattern. The user may choose to record other alarm sounds that would violate the regulations governing such tonal patterns and compromise the safety features of the device. The use of factory pre-recorded voice messages alleviates this problem.

It is emphasized that no other related prior art known to the inventor makes use of factory pre-recorded voice messages to indicate the location of the environmental condition or the type of condition or both. Sufficient addressable electronic memory is available in the preferred embodiment of the invention to afford numerous pre-recorded voice messages.

SUMMARY OF THE INVENTION

Described herein is the Environmental Condition Detector with Audible Alarm and Voice Identifier invention, which comprises an environmental condition detector, such as a smoke detector, carbon monoxide gas detector, natural gas detector, propane detector, or any combination detector thereof, which detects the desired environmental condition (s) by those methods well known and described in the art and emits the prescribed audible tonal pattern alarm in accordance with the industry's empowered governing bodies (National Fire Protection Association, Underwriters Laboratories etc.) criteria for such environmental conditions. Simultaneously, the environmental condition detector sensing the condition emits a verbal message to indicate, through a recorded voice message or synthesized human voice, the condition being sensed. This recorded voice message is emitted simultaneously with the audible tonal pattern alarm so as normally to occur during silent segments of the prescribed tonal pattern alarm. For example, for the condition of smoke detection, the smoke detector emits the following combination audible tonal pattern alarm (Beep) and recorded voice message. "Beep - - - Beep - - - Beep - - - 'SMOKE' - - - Beep - - - Beep - - - Beep - - - 'SMOKE' - - - "in a periodic manner for as long as the environmental condition is detected. As a second example, for carbon monoxide detection, a carbon monoxide detector emits "Beep - - - Beep - - - Beep - - - Beep - - - 'CO' - - - Beep - - - Beep - - - Beep - - - Beep - - - 'CO' - - -". As a third example, for smoke detection with the location identifier, a smoke detector emits "Beep - - - Beep - - - Beep - - - "SMOKE IN BASEMENT" - - - Beep - - - Beep - - - Beep - - - 'SMOKE IN BASEMENT' - - - ". As a fourth example, for carbon monoxide detection with a voice location only identifier, a carbon monoxide detector emits ""Beep - - - Beep - - - Beep - - - Beep - - -'Utility Room' - - - Beep - - - Beep - - - Beep - - - Beep - - - 'Utility Room' - - -".

OBJECTS AND ADVANTAGES OF THE PRESENT INVENTION

It is one object of the present invention to provide environmental condition detectors that function as single station (non-interconnected) detector units equipped to emit a tonal pattern alarm and a recorded voice message. The recorded voice message clearly identifies the location of the environmental condition detector sensing the condition, or describes the type of environmental condition that has been detected, or both, as illustrated in the above, non-exhaustive examples. The single station detector embodiment is battery powered or 120 VAC powered. User-selectable coding switches or jumpers permit the user to define the physical location of the single station unit within the dwelling. No other related prior art is known to the inventor that uses factory pre-recorded voice messages in combination with conventional tonal pattern alarms to indicate the specific type or specific location, or both, of an abnormal environmental condition as related to single station units.

It is another object of the present invention to provide an environmental condition detection system where one detector sensing an environmental condition causes all other interconnected detectors to emit identical tonal pattern alarms and recorded voice messages. The hardwired, directly interconnected detectors forming the environmental condition detection system are 120 VAC powered with optional battery back-up and use the recorded voice message to identify the location of the environmental condition detector sensing the condition, or to describe the type of environmental condition that has been detected, or both, as illustrated in the above, non-exhaustive examples. The environmental condition detection system embodiments of the present invention do not require the use of a centralized control unit (control panel) between detectors. No other related prior art is known to the inventor that uses factory pre-recorded voice messages in combination with conventional tonal pattern alarms to indicate the specific type or specific location, or both, of an abnormal environmental condition as related to a directly interconnected environmental condition detector system having no central control unit or panel.

A major advantage of both the single station embodiment and the system embodiment of the present invention is the use of factory pre-recorded voice messages that fit within the National Fire Protection Association and Underwriters Laboratories specified 1.5 second silence period of the standard smoke detector and carbon monoxide detector tonal pattern alarms. Prior art using user-recorded voice messages are intended to indicate directions on how to escape the hazard or how to respond to a hazard. Such messages would not practically fit into the maximum 1.5 second silent time period in conventional tonal alarm patterns for smoke detec-

tors and carbon monoxide detectors used in dwellings. The allowance for a user to record his or her own messages may actually add to the confusion and danger that results during an alarm condition if the user chooses to record additional alarm sounds or errs in the directions given in the message on how to properly respond to a hazardous conditon.

BRIEF DESCRIPTION OF THE DRAWINGS

FIG. **1** is a sketch of a preferred embodiment of the Environmental Condition Detector with Alarm and Voice Identifier according to the invention.

FIG. **2** is a sketch of a preferred embodiment of the electronic circuitry for the interconnected system embodiment of the Environmental Condition Detector with Alarm and Voice Identifier according to the invention.

FIG. **3** is a sketch of a second preferred embodiment of the electronic circuitry for the interconnected system embodiment of the Environmental Condition Detector with Alarm and Voice Identifier according to the invention.

FIG. **4** shows an example audible tonal pattern alarm and recorded voice message combination used for the Environmental Condition Detector with Alarm and Voice Identifier configured as a smoke detector and using a recorded voice message as an environmental condition type identifier according to the invention.

FIG. **5** shows an example audible tonal pattern alarm and recorded voice message combination used for the Environmental Condition Detector with Alarm and Voice Identifier configured as a smoke detector using a recorded voice message as an environmental condition location identifier according to the invention.

FIG. **6** shows an example audible tonal pattern alarm and recorded voice message combination used for the Environmental Condition Detector with Alarm and Voice Identifier configured as a carbon monoxide detector and using a recorded voice message as an environmental condition type identifier and location identifier according to the invention.

FIG. **7** shows one method for the user to select the installation location coding of the Environmental Condition Detector With Alarm and Voice Identifier according to the invention.

DETAILED DESCRIPTION OF THE INVENTION

A preferred embodiment of the Environmental Condition Detector with Alarm and Voice Identifier **6** is shown in FIG. **1**. The unit is powered by a battery **40** and/or by standard 120 VAC (not shown). The environmental condition sensor and alarm unit **10** (conventional smoke detector, carbon monoxide detector, combination smoke detector and carbon monoxide detector, natural gas detector, propane detector, abnormal temperature etc.) is any sensor type(s) utilizing environmental detection methods and alarm devices typically known in the art of smoke detectors, carbon monoxide detectors and other hazard detectors. Upon sensing the environmental condition, the environmental condition sensor and alarm unit **10** sounds its tonal pattern alarm to indicate that an environmental condition has been sensed in the immediate area. The alarm pattern is a prescribed audible tonal pattern alarm corresponding to the environmental condition as set forth by the empowered governing body (National Fire Protection Association, Underwriters Laboratories etc.). The interface and control unit **20** electronically interfaces with the environmental condition sensor and alarm unit **10** and controls the timing of a recorded voice message that is emitted simultaneously with the audible tonal pattern alarm such that the recorded voice message is emitted only during the period when the audible tonal pattern alarm cycles through a silent period. In one embodiment, an electronic signal frequency counter (not shown) is used to determine when the silent period of the audible alarm is occurring. The recorded voice message or synthesized human voice message is factory-recorded on an electronic storage media **30** such as, but not limited to, a ROM device. The recorded voice message is emitted through a speaker or other audio transducer **70**. For the embodiments of the invention requiring identification of the location of the environmental condition detector sensing the environmental condition, a selectable coding apparatus **50** (jumper selector or DIP switch) which connects to the interface and control unit **20** is provided to select one of several predefined physical locations of the environmental condition detectors within a residence. Recorded voice messages to identify physical locations consistent with the position of the selectable coding apparatus **50** are stored on the electronic storage media **30**. The selectable coding apparatus **50** is set to correspond to the location within the dwelling where the particular environmental condition detector **6** is installed. A language code selector (jumper set or DIP switch) **60** is used to choose the language type (English, Spanish, etc.) used by the recorded voice. For interconnected 120 VAC units, when one environmental condition detector sounds its tonal pattern alarm and recorded voice message, all interconnected units will sound identical tonal pattern alarms and recorded voice messages in temporal phase. For the environmental condition detection system embodiment, an interconnecting conductor set **80** sends and receives a coded electrical signal encoded and decoded by the interface and control unit **20** by the sending and receiving detector, respectively. The coding of the signal sent over the interconnecting conductor set determines what specific recorded voice message is played from the electronic storage media **30** at the interconnected but remotely located environmental condition detectors. Another embodiment of the invention shown in FIG. **3** uses several interconnection conductors which alleviates the need for electrical encoding and decoding of the signal sent and received over the interconnecting conductor set **80**.

Shown in FIG. **2** is a sketch of a preferred embodiment of the electronic circuitry for one detector unit of the interconnected system embodiment of the Environmental Condition Detector with Alarm and Voice Identifier. The environmental condition sensor and alarm unit **10** connects to the interface and control unit **20** to trigger the monostable multivibrator **21** for a predetermined period of time when an environmental condition is detected. The monostable multivibrator **21** enables the signal encoder **22** to send a coded electrical signal to the local signal decoder **23** and to all other signal decoders of interconnected detectors hardwired linked together through the conductor set **80** shown in FIG. **1**. Upon receiving a local or remote encoded signal, the signal decoder **23** decodes the signal and validates or rejects the signal. Upon validation of a received signal, within each interconnected detector, the signal decoder **23** enables and addresses the electronic voice memory integrated circuit **31** to emit a recorded voice message verbally describing the location or type, or both, of the environmental condition sensed. All recorded voice messages emitted by the interconnected detector units connected through the conductor set **80** via electrical conductor connector **37** are in temporal phase. A selectable coding apparatus of switches or jumpers **51** defines the physical installation location of each envi-

ronmental condition detector through pre-defined location designations illustrated in FIG. **7**. A language selector switch apparatus **60** is used to select which language is used during the playing of the recorded voice messages. The recorded voice message is played through a speaker **70**.

Shown in FIG. **3** is a sketch of a second preferred embodiment of the electronic circuitry for one detector unit for the interconnected system embodiment of the Environmental Condition Detector with Alarm and Voice Identifier. The environmental condition sensor and alarm unit **10** connects to the interface and control unit **20** to trigger the monostable multivibrator **21** for a predetermined period of time when an environmental condition is detected. The monostable multivibrator **21** enables the electronic voice memory integrated circuit **31** to emit a recorded voice message verbally describing the location or type, or both, of the environmental condition sensed. All detector units within the interconnected system share common electrical connection to the address bits on each detector unit's electronic voice memory integrated circuit **31** through a multiple conductor connector interface **35** which results in all detector units emitting identical recorded voice messages in temporal phase. A selectable coding apparatus of switches or jumpers **52** defines the physical installation location of each environmental condition detector through pre-defined location designations illustrated in FIG. **7**. A language selector switch apparatus **60** is used to select which language is used during the playing of the recorded voice messages. The recorded voice message is played through a speaker **70**.

Shown in FIG. **4** is an example alarm timing plot of the sound emitted **82** by an environmental condition detector using both an audible tonal pattern alarm **85** and a recorded voice message **90** to convey information about the specific environmental condition detected. In the example exhibited in FIG. **2**. the environmental condition detector embodiment is a smoke detector using voice as an environmental condition type identifier only. The recorded voice message **90** is inserted into the defined silence periods of the prescribed audible tonal pattern alarm **85** consistent with conventional smoke detector alarms.

Shown in FIG. **5** is an example alarm timing plot of the sound emitted **92** by an environmental condition detector using an audible tonal pattern alarm **95** to convey the specific type of environmental condition and a recorded voice message **100** to convey the location of the detected environmental condition. In the example exhibited in FIG. **5**, the environmental condition detector embodiment is a smoke detector using voice as an environmental condition location identifier only. The recorded voice message **100** is inserted into the defined silence periods of the prescribed audible tonal pattern alarm **95** consistent with conventional smoke detector alarms.

Shown in FIG. **6** is an example alarm timing plot of sound emitted **102** by an environmental condition detector using an audible tonal pattern alarm **105** and a recorded voice message **110** to convey the specific type of environmental condition detected and the location of the environmental condition detector sensing the environmental condition. In the example exhibited in FIG. **6**, the environmental condition detector embodiment is a carbon monoxide detector using voice as both an environmental condition type identifier and location identifier. The recorded voice message **110** is inserted into the defined silence periods of the prescribed audible tonal pattern alarm **105** consistent with conventional carbon monoxide alarms. The example tonal pattern alarms and recorded voice messages are illustrative and not intended to provide an exhaustive exhibit of all possible tonal alarm patterns and recorded voice messages.

Shown in FIG. **7** is a selectable coding apparatus **115** for the user to select one of the pre-defined locations of the Environmental Condition Detector with Alarm and Voice Identifier embodiment when and where it is installed in a dwelling. Selectable coding means such as a jumper **117** on DIP header pins **120** or DIP switches (not shown) are simple methods to define the installation location of a detector embodiment. Typical dwelling locations are shown in FIG. **7** and are not intended to exhibit an exhaustive list.

The various preferred embodiments described above are merely descriptive of the present invention and are in no way intended to limit the scope of the invention. Modifications of the present invention will become obvious to those skilled in the art in light of the detailed description above, and such modifications are intended to fall within the scope of the appended claims.

I claim:

1. A self-contained ambient condition detector comprising:

an ambient condition sensor;

control electronics coupled to the sensor and responsive thereto, in response to a predetermined ambient condition, a user unalterable, pre-stored, audible, alarm identifying tonal output pattern is emitted wherein the pattern includes a plurality of spaced apart predetermined silent intervals bounded by pluralities of spaced apart tones wherein the tones are interrupted and are spaced apart from one another by silent intertonal spacing intervals of a common duration and wherein the common duration is always shorter than each of the silent intervals and where the control electronics includes voice output circuitry, the voice circuitry includes a factory pre-stored, user unalterable, verbal alarm-type output message, the pre-stored message is associated with the tonal output pattern and verbalizes the respective alarm type and where the control electronics, in response to the predetermined ambient condition, emits the audible tonal pattern and repetitively emits the verbal alarm-type message in respective silent intervals,

wherein the voice circuitry includes solid state storage circuitry for the pre-stored verbal message, a second sensor coupled to the control electronics, and a second condition warning audible message stored in the solid state storage circuitry, and a common housing which carries the sensors, the electronics, the output circuitry and a power supply.

2. A detector as in claim **1** wherein in response to sensing the second condition, the control electronics repetitively emits the second warning verbal message.

3. A detector as in claim **2** wherein the ambient condition sensor is selected from a class which includes a fire sensor, and a gas sensor.

4. A detector as in claim **3** wherein the second sensor is selected from a class which includes a fire sensor, and a gas sensor.

5. A self-contained ambient condition detector comprising:

an ambient condition sensor;

control electronics coupled to the sensor and responsive thereto wherein in response to a predetermined ambient condition, a user unalterable, pre-stored, audible, alarm identifying tonal output pattern is emitted, the pattern includes a plurality of spaced apart predetermined silent intervals bounded by pluralities of spaced apart tones, the tones are interrupted and are spaced apart

from one another by silent intertonal spacing intervals of a common duration and wherein the common duration is always shorter than each of the silent intervals and wherein the control electronics includes voice output circuitry, the voice circuitry includes a factory pre-stored, user unalterable, verbal alarm-type output message where the pre-stored message is associated with the tonal output pattern and verbalizes the respective alarm type and wherein the control electronics, in response to the predetermined ambient condition, emits the audible tonal pattern and repetitively emits the verbal alarm-type message in respective silent intervals;

a common housing for the sensor, the electronics, the output circuitry and a power supply, wherein the sensor is a fire sensor and the pre-stored verbal message specifies a fire to reinforce a respective tonal output pattern indicative of sensed fire;

wherein the fire indicating tonal output pattern defines groups of substantially identical output tones with a common intertonal spacing of the common duration and where the silent intervals are at least twice as long as the common duration; and

which includes at least one pre-stored verbal counterpart to the pre-stored verbal message wherein the pre-stored verbal message and the verbal counterpart are in first and second different languages.

6. A detector as in claim **5** which includes a manually operable, language specifying element.

7. A detector comprising:

a housing;

a fire sensor carried by the housing;

a control element coupled to the sensor wherein the element includes circuitry for detecting a fire;

an alarm indicating audible output device coupled to the control element wherein the control element, in response to a detected fire, drives the output device to repetitively emit interrupted groups of fire alarm indicating tones wherein the members of the groups are spaced apart from one another by a first time interval and wherein groups are spaced apart by silent, longer second time intervals;

semiconductor storage for at least a word indicative of fire wherein in response to a detected fire the control element repetitively injects the stored fire indicating word into only the second time intervals between groups of fire alarm indicating tones, wherein the tonal patterns are predefined, and not user alterable and wherein the output word is pre-stored at manufacture and not user alterable;

the housing also carries a power supply and is installable by a user as a self-contained unit; and

which includes a second condition sensor and an associated verbal, condition warning phrase stored in the semiconductor storage.

8. A detector as in claim **7** wherein the control element emits the associated verbal condition warning phrase in response to a predetermined output from the second sensor.

9. An apparatus comprising:

a first detector having:

a housing;

at least one ambient condition sensor carried by the housing;

a control element, carried by the housing and coupled to the sensor, for establishing the presence of a local alarm condition;

a wired input/output port coupled to the control element wherein the port and control element receive signals from other detectors, or, transmit signals to other detectors;

an audible output device, coupled to the control element and responsive thereto for emitting at least one user unalterable prescribed, alarm specifying, audible tonal pattern, activated in response to one of, the presence of a local alarm condition or a received signal indicating an alarm condition at a displaced detector, wherein some of the tones are spaced apart from one another by a first time interval and wherein others of the tones are closer together;

a manually settable location specifying member, coupled to the control element whereby a user can specify a location at which the housing is installed; and

voice annunciating circuitry and a plurality of stored, user unalterable verbal outputs identifying at least a plurality of locations for specifying an alarm location wherein in response to one of, an established local alarm condition, or received signals from another detector, the voice annunciating circuitry verbally outputs at least one of an alarm type message, or, an alarm location message repetitively in at least some of the first intervals, such that where a local alarm condition has been detected, at least one of, the location established by the manually settable member, or, the type of alarm is verbalized, and where alarm indicating signals have been received, at least one of the alarm type at the detector transmitting the signals, or, the location specified by the settable member of the detector transmitting the signals is verbalized.

10. An apparatus as in claim **9** wherein the ambient condition sensor comprises at least one of a fire sensor and a gas sensor.

11. An apparatus as in claim **10** wherein the control element includes a programmed processor and at least one pre-stored tonal output pattern indicative of the sensed ambient condition.

12. An apparatus as in claim **11** which includes a second pre-stored tonal output pattern indicative of a second sensed ambient condition.

13. An apparatus as in claim **10** which includes at last a second detector, substantially identical to the first detector and coupled therewith via the input/output ports, wherein in response to the first detector establishing the presence of a local alarm condition and sending alarm and location indicating signals to the second detector whereby the second detector emits the prescribed audible tonal pattern identifying the alarm type and during at least some of the first intervals, and verbalizes the location specified by the location specifying member of the first detector.

14. An apparatus as in claim **13** wherein the detectors each include at least one, prestored, alarm type indicating message wherein the second detector, in response to the received alarm and location indicating message, from the first detector, verbalizes the type of alarm condition local to the first detector during at least some of the first intervals.

15. An apparatus as in claim **13** wherein each detector includes a power supply.

16. An apparatus as in claim **15** wherein the supply includes a connector for engaging an exterior source of energy.

17. An apparatus as in claim **15** wherein the input/output ports each exhibit a connector coupling one of a coded signal between detectors, or a plurality of signals between detectors.

18. An apparatus as in claim 17 wherein input/output ports for coupling a coded signal between detectors comprise a plurality of conductors for coupling electrically coded signals between detectors.

19. An apparatus as in claim 18 wherein the plurality comprises two conductors.

20. An apparatus as in claim 17 wherein the input/output ports for coupling a plurality of signals between detectors comprise a plurality of conductors for carrying uncoded electrical signals between detectors.

21. An apparatus as in claim 13 which includes circuitry in the detectors for encoding and decoding the alarm and location indicating signals.

22. An apparatus as in claim 9 which includes a second, different sensor and wherein the voice annunciating circuitry outputs another user unalterable message, wherein the another message describes a second type of sensed ambient condition such that the message is emitted during periods of silence in a prescribed, user unalterable tonal alarm pattern indicative of the second type of sensor.

23. An environmental condition detector using pre-recorded voice messages to indicate the location of an environmental condition detected in a region comprising:

(a) at least one sensor for detecting the presence of an environmental condition in the region wherein the sensor comprises a type selected from a group including a smoke sensor, a carbon monoxide sensor, a natural gas sensor, a propane sensor, and any multiple combination of the sensors;

(b) an electronic storage device for storing user unalterable pre-recorded voice messages wherein at least some of the messages represent different locations;

(c) a selecting device for a user to select one of the pre-recorded voice messages to represent the location of the detector in the region;

(d) an electronic circuit coupled to the at least one sensor, and the devices for activation of an audible alarm device which emits user unalterable prescribed groups of pulsating, audible output tonal patterns for the duration of the sensed environmental condition, wherein groups of patterns are spaced apart by predetermined silent periods, wherein the electronic circuit repeatedly emits selected pre-recorded user unalterable voice messages that verbally describe the location of the detected environmental condition, as specified by the selecting device, for the duration of detection thereof wherein the selected pre-recorded voice message is repeatedly emitted during at least some of the silent periods; and

(e) a housing which carries the sensor, the electronic circuit, the electronic storage device, the alarm device and the selecting device.

24. A method for providing environmental condition detection for a building comprising:

(a) providing a plurality of detectors for a building having one or more distinctive regions;

(b) setting a selectable coding element to define each detector's installation location in the building whereupon a detector sensing an environmental condition emits a prescribed audible tonal pattern alarm and a user unalterable pre-recorded voice message which verbally describes the installation location of the detector sensing an environmental condition, during the periods of silence in the tonal pattern emitted by that detector, for the duration of the environmental condition; and

(c) interconnecting a minimum of two environmental condition detectors forming an environmental condition detection system such that the interconnected detectors respond to one detector which is sensing an environmental condition whereby all other interconnected detectors emit substantially the same tonal pattern alarm and pre-recorded voice message as those emitted by the environmental condition detector sensing the environmental condition.

25. The method of claim 24 wherein said method comprises emitting a pre-recorded voice message that verbally describes the type of environmental condition detected, for the duration of the detection of the said environmental condition, such that the pre-recorded voice message is repetitively emitted during at least some periods of silence in the prescribed audible tonal pattern alarm.

26. The method of claim 24 wherein said method comprises providing an environmental condition detector selected from a group which includes a smoke detector, a carbon monoxide detector, a natural gas detector, a propane detector, and any multiple combination of these environmental condition detector types.

27. An apparatus comprising:

a first detector having:

a housing;

at least one ambient condition sensor carried by the housing;

circuitry, carried by the housing and coupled to the sensor, for establishing the presence of a local alarm condition;

a wired input/output port coupled to the circuitry wherein the port and circuitry receive signals from other detectors, or, transmit signals to other detectors;

an audible output device, coupled to the circuitry and responsive thereto for emitting at least one user unalterable prescribed, alarm specifying, audible tonal pattern, activated in response to one of, the presence of a local alarm condition or a received signal indicating an alarm condition at a displaced detector, wherein some of the tones are spaced apart from one another by a first time interval and wherein others of the tones are closer together; and

wherein the circuitry includes voice annunciating circuits and at least one of a stored, user unalterable verbal alarm type output, and, a plurality of stored, user unalterable verbal outputs identifying at least a plurality of locations for specifying an alarm location wherein where a local alarm condition has been detected, at least one of, the alarm type or alarm location is verbalized, and where alarm indicating signals have been received, at least one of the alarm type at the detector transmitting the signals, or, the alarm location is verbalized.

28. An apparatus as in claim 27 wherein the ambient condition sensor comprises at least one of a fire sensor and a gas sensor.

29. An apparatus as in claim 28 wherein the circuitry includes a programmed processor and at least one pre-stored tonal output pattern indicative of the sensed ambient condition.

30. An apparatus as in claim 29 which includes a second pre-stored tonal output pattern indicative of a second sensed ambient condition.

31. An apparatus as in claim 28 which includes at least a second detector, substantially identical to the first detector and coupled therewith via the input/output ports, wherein in response to the first detector establishing the presence of a local alarm condition and sending an alarm indicating signal to the second detector, the second detector emits the pre-

scribed audible tonal pattern identifying the alarm type and during at least some of the first intervals, and verbalizes at least one of the type of alarm at the first detector or the location thereof.

32. An apparatus as in claim **27** which includes a second, different sensor and wherein the voice annunciating circuits output another user unalterable message, wherein the another message describes a second type of sensed ambient condition such that the message is emitted during periods of silence in a prescribed, user unalterable tonal alarm pattern indicative of the second type of sensor.

33. An apparatus as in claim **27** wherein each detector includes a power supply.

34. An apparatus as in claim **27** wherein the input/output ports each include a connector coupling one of a coded signal between detectors, or a plurality of signals between detectors.

35. An apparatus as in claim **34** wherein input/output ports for coupling a coded signal between detectors comprise at least one conductor for coupling electrically coded signals between detectors.

36. An apparatus as in claim **34** wherein the input/output ports for coupling a plurality of signals between detectors comprise a plurality of conductors for carrying uncoded electrical signals between detectors.

37. An environmental condition detector which uses pre-recorded voice messages to indicate the location of an environmental condition detected in a region comprising:

at least one sensor for detecting the presence of an environmental condition in the region wherein the sensor comprises a type selected from a group including a fire sensor, a carbon monoxide sensor, a natural gas sensor, a propane sensor, and any multiple combination of the sensors;

an electronic storage device for storing user unalterable pre-recorded voice messages wherein at least some of the messages represent different locations;

an electrical signal to select one of the pre-recorded voice messages to represent the location of the detector in the region;

an electronic circuit coupled to the at least one sensor, and the device for activation of an audible alarm device which emits user unalterable prescribed groups of pulsating, audible output tonal patterns for the duration of the sensed environmental condition, wherein groups of patterns are spaced apart by predetermined tonal silent periods, wherein the electronic circuit repeatedly verbalizes the selected, pre-recorded, user unalterable location message during at least some of the silent periods; and

a housing which carries the sensor, the electronic circuit, the electronic storage device, and the alarm device.

38. A detector as in claim **37** wherein one of the pre-recorded voice messages specifies an alarm type and wherein the electronic circuit verbalizes the alarm type during some of the tonal silent periods.

39. A method for providing environmental condition detection for a building comprising:

(a) providing a plurality of detectors for a building having one or more distinctive regions;

(b) interconnecting the detectors with at least one conductor;

(c) sensing an environmental condition at a detector and emitting a prescribed audible tonal alarm pattern and a user unalterable pre-recorded voice message which verbally describes the type of environmental condition, during the periods of silence in the tonal pattern emitted by that detector, for the duration of the environmental condition; and wherein all other interconnected detectors emit substantially the same tonal alarm pattern and pre-recorded voice message as emitted by the detector sensing the environmental condition.

40. The method of claim **39** wherein a pre-recorded voice message that verbally describes the location of the sensed environmental condition is repetitively emitted during at least some periods of silence in the emitted tonal pattern at all interconnected detectors.

41. The method of claim **39** which includes providing an environmental condition detector selected from a group which includes a fire detector, a carbon monoxide detector, a natural gas detector, a propane detector, and any multiple combination of the detector types.

* * * * *

US006784798B2

(12) **United States Patent**
Morris

(10) **Patent No.: US 6,784,798 B2**
(45) **Date of Patent: *Aug. 31, 2004**

(54) **ENVIRONMENTAL CONDITION DETECTOR WITH AUDIBLE ALARM AND VOICE IDENTIFIER**

(76) Inventor: **Gary Jay Morris**, 2026 Glenmark Ave., Morgantown, WV (US) 26505

(*) Notice: Subject to any disclaimer, the term of this patent is extended or adjusted under 35 U.S.C. 154(b) by 0 days.

This patent is subject to a terminal disclaimer.

(21) Appl. No.: **10/396,068**

(22) Filed: **Mar. 25, 2003**

(65) **Prior Publication Data**

US 2003/0179090 A1 Sep. 25, 2003

Related U.S. Application Data

(63) Continuation of application No. 09/651,454, filed on Aug. 30, 2000, now Pat. No. 6,600,424, which is a continuation of application No. 09/299,483, filed on Apr. 26, 1999, now Pat. No. 6,144,310.

(60) Provisional application No. 60/117,307, filed on Jan. 26, 1999.

(51) **Int. Cl.**[7] **G08B 17/10**

(52) **U.S. Cl.** **340/628**; 340/577; 340/632; 340/692; 340/693.11

(58) **Field of Search** 340/628, 692, 340/577, 505, 506, 632, 693.11, 500, 517, 520–524, 531–534, 540, 584, 605, 691.1, 691.4, 693.5, 693.7, 693.9, 286.01, 286.05, 286.11, 328, 329, 384.1, 384.3, 384.4, 384.73

(56) **References Cited**

U.S. PATENT DOCUMENTS

3,906,491	A	9/1975	Gosswiller et al.
4,101,872	A	7/1978	Pappas
4,141,007	A	2/1979	Kavasilios et al.
4,160,246	A	7/1979	Martin et al.
4,275,274	A	6/1981	English
4,282,519	A	8/1981	Haglund et al.

(List continued on next page.)

FOREIGN PATENT DOCUMENTS

WO	WO 90/01759	2/1990

OTHER PUBLICATIONS

National Fire Protection Association—NFPA72—National Fire Alarm Code 1996 Edition pp. 72 through 106. Quincy, MA USA.

NFPA 720, Recommended Practice for the Installation of Household Carbon Monoxide (CO) Warning Equipment 1998 Edition.

UL 217 ISBN 0–7629–0062–8, Single and Multiple Station Smoke Alarms, Mar. 16, 1998–Feb. 21, 1997.

UL 2034 ISBN 0–7629–274–9, Single and Multiple Station Carbon Monoxide Alarms, Dec. 21, 1998–Oct. 29, 1996.

Primary Examiner—Nina Tong
(74) *Attorney, Agent, or Firm*—Welsh & Katz, Ltd.

(57) **ABSTRACT**

Due to the presence of various environmental condition detectors in the home and businesses such as smoke detectors, carbon monoxide detectors, natural gas detectors, etc., each having individual but similar sounding alarm patterns, it can be difficult for occupants of such dwellings to immediately determine the specific type of environmental condition that exists during an alarm condition. The present invention comprises an environmental condition detector using both tonal pattern alarms and pre-recorded voice messages to indicate information about the environmental condition being sensed. Single-station battery-powered and 120VAC detectors are described as are multiple-station interconnected 120VAC powered detectors. The pre-recorded voice messages describe the type of environmental condition detected or the location of the environmental condition detector sensing the condition, or both, in addition to the tonal pattern alarm. Provisions are made for multi-lingual pre-recorded voice messages.

35 Claims, 5 Drawing Sheets

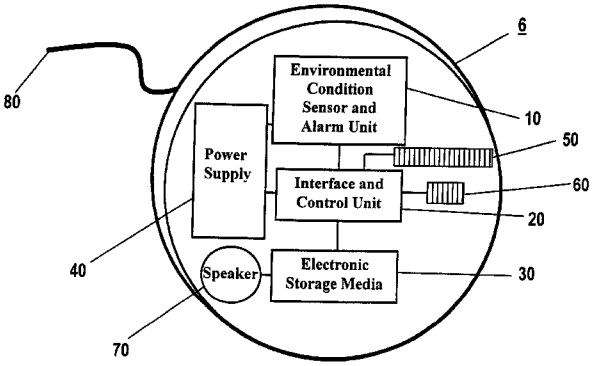

U.S. PATENT DOCUMENTS

4,288,789	A		9/1981	Molinick et al.
4,335,379	A		6/1982	Martin
4,343,990	A		8/1982	Ueda
4,350,860	A		9/1982	Ueda
4,351,999	A		9/1982	Nagamoto et al.
4,363,031	A		12/1982	Reinowitz
4,365,315	A		12/1982	Jamnik
4,366,873	A		1/1983	Levy et al.
4,375,329	A		3/1983	Park
4,389,639	A		6/1983	Torii et al.
4,400,786	A		8/1983	Mandel et al.
4,453,222	A		6/1984	Goszyk
4,455,551	A		6/1984	Lemelson
4,481,507	A		11/1984	Takiguchi et al.
4,498,078	A		2/1985	Yoshimura et al.
4,500,971	A		2/1985	Futaki et al.
4,519,027	A		5/1985	Vogelsberg
4,531,114	A		7/1985	Topol et al.
4,560,978	A		12/1985	Lemelson
4,572,652	A		2/1986	Tada et al.
4,682,348	A		7/1987	Dawson et al.
4,688,021	A	*	8/1987	Buck et al. 340/521
4,698,619	A		10/1987	Loeb
4,754,266	A		6/1988	Shand et al.
4,810,996	A		3/1989	Glen et al.
4,816,809	A		3/1989	Kim
4,821,027	A		4/1989	Mallory et al.
4,851,823	A		7/1989	Mori
4,862,147	A		8/1989	Thomas
4,894,642	A		1/1990	Ashbaugh et al.
4,904,988	A		2/1990	Nesbit et al.
4,940,965	A		7/1990	Umehara
4,951,045	A		8/1990	Knapp et al.
4,988,980	A		1/1991	Graham
5,019,805	A		5/1991	Curl et al.
5,103,206	A		4/1992	Yu
5,117,217	A		5/1992	Nykerk
5,153,567	A		10/1992	Chimento
5,229,753	A		7/1993	Berg et al.
5,291,183	A		3/1994	Chiang
5,349,338	A		9/1994	Routman et al.
5,379,028	A		1/1995	Chung
5,460,228	A		10/1995	Butler
5,506,565	A		4/1996	de Leon et al.
5,548,276	A		8/1996	Thomas
5,587,705	A		12/1996	Morris
5,657,380	A		8/1997	Mozer
5,663,714	A	*	9/1997	Fray 340/692
5,673,023	A		9/1997	Smith
5,724,020	A		3/1998	Hsu
5,726,629	A		3/1998	Yu
5,764,134	A		6/1998	Carr et al.
5,786,749	A		7/1998	Johnson et al.
5,786,768	A		7/1998	Chan et al.
5,793,280	A		8/1998	Hincher
5,798,686	A		8/1998	Schreiner
5,841,347	A		11/1998	Kim
5,846,089	A		12/1998	Weiss et al.
5,856,781	A		1/1999	Michel et al.
5,864,288	A		1/1999	Hogan
5,874,893	A		2/1999	Ford
5,877,698	A		3/1999	Kusnier et al.
5,886,631	A		3/1999	Ralph
5,894,275	A		4/1999	Swingle
5,898,369	A		4/1999	Godwin
5,905,438	A		5/1999	Weiss et al.
5,914,650	A		6/1999	Segan
5,936,515	A		8/1999	Right et al.
5,986,540	A		11/1999	Nakagaki et al.
6,043,750	A		3/2000	Mallory
6,097,289	A		8/2000	Li et al.
6,114,967	A		9/2000	Yousif
6,121,885	A		9/2000	Masone et al.
6,144,310	A	*	11/2000	Morris 340/692
6,307,482	B1		10/2001	Le Bel
6,323,780	B1	*	11/2001	Morris 340/692
6,344,799	B1	*	2/2002	Walker 340/691.1
6,600,424	B1	*	7/2003	Morris 340/628

* cited by examiner

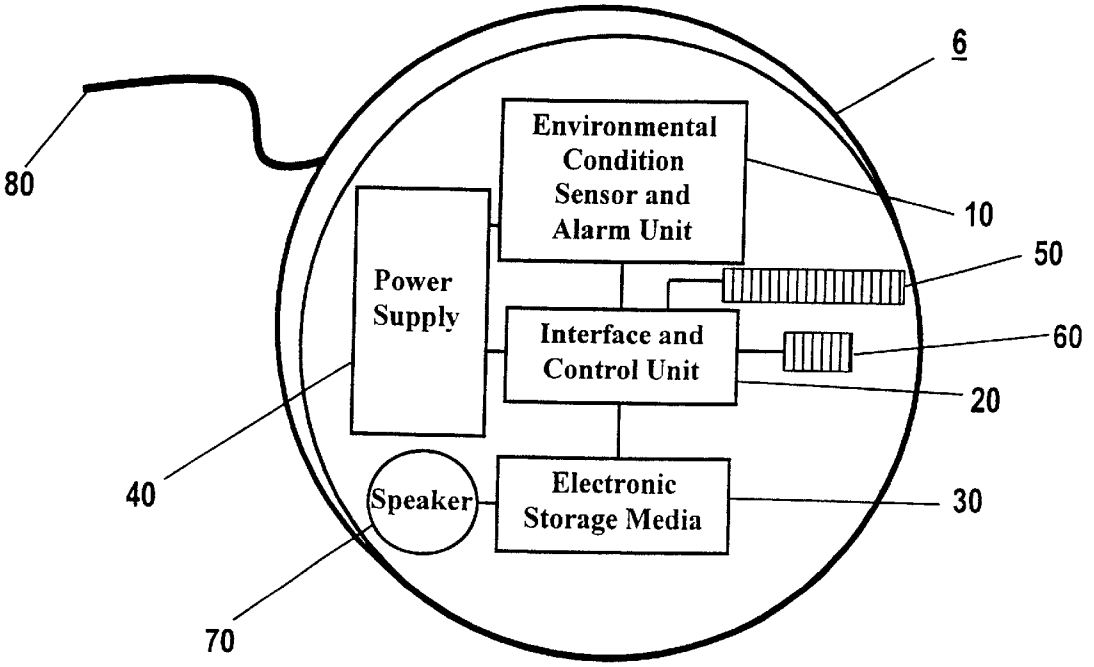
6
80
Environmental Condition Sensor and Alarm Unit
10
50
Power Supply
Interface and Control Unit
60
20
40
Speaker
Electronic Storage Media
30
70

Fig. 1

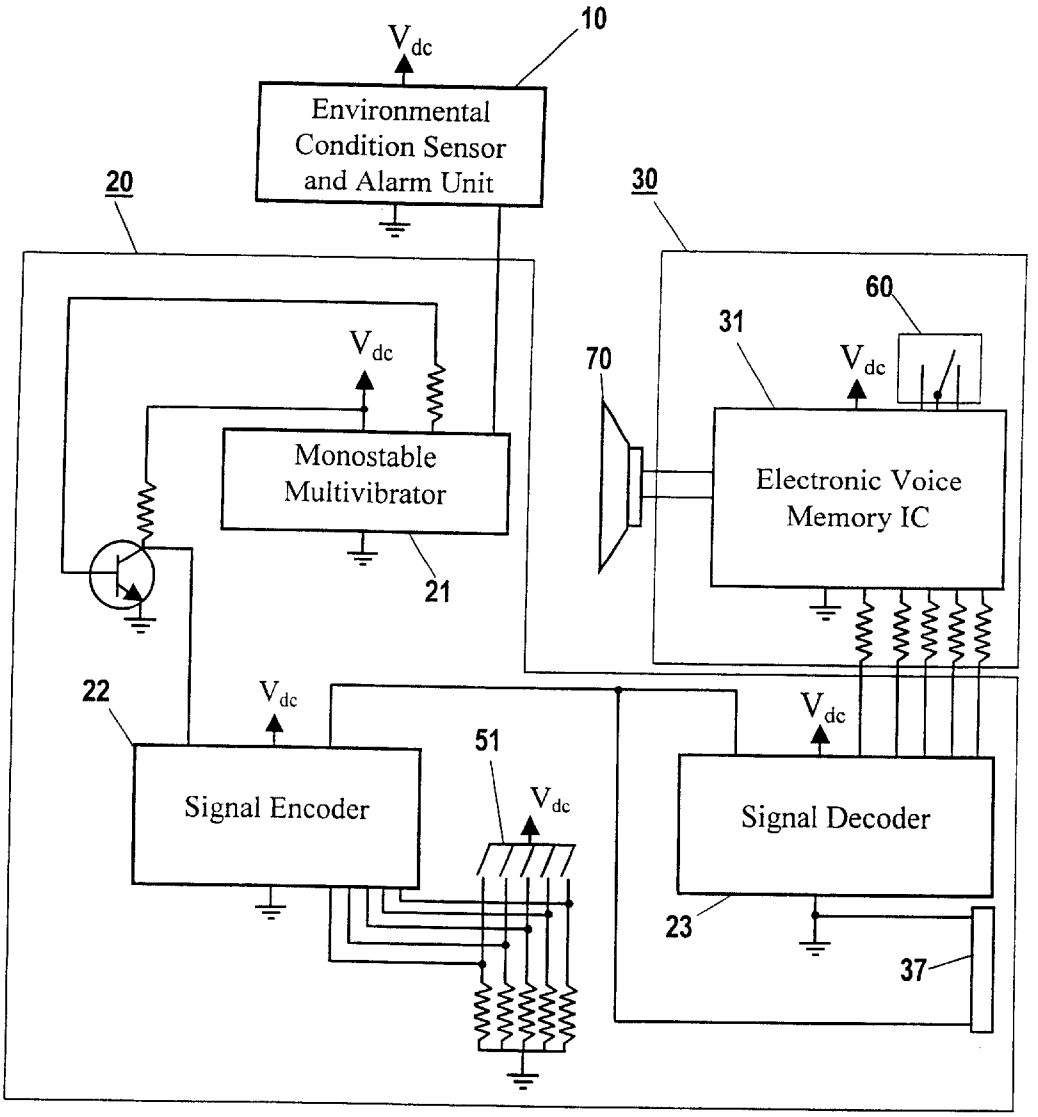
V_{dc}
10
Environmental Condition Sensor and Alarm Unit
20
30
60
31
70
V_{dc}
Monostable Multivibrator
21
Electronic Voice Memory IC
22
V_{dc}
V_{dc}
51
V_{dc}
Signal Encoder
Signal Decoder
23
37

Fig. 2

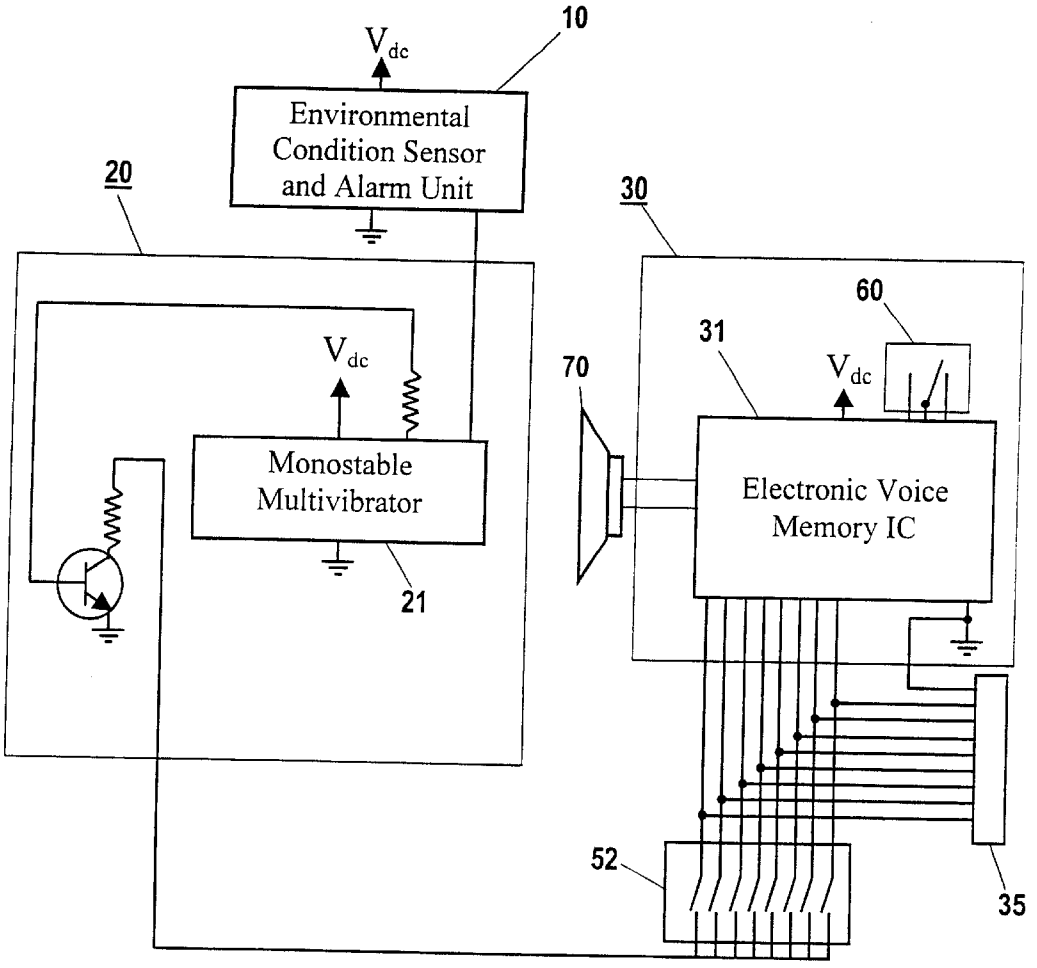
V_{dc}
10
Environmental Condition Sensor and Alarm Unit
20
30
60
31
V_{dc}
70
V_{dc}
Monostable Multivibrator
Electronic Voice Memory IC
21
52
35

Fig. 3

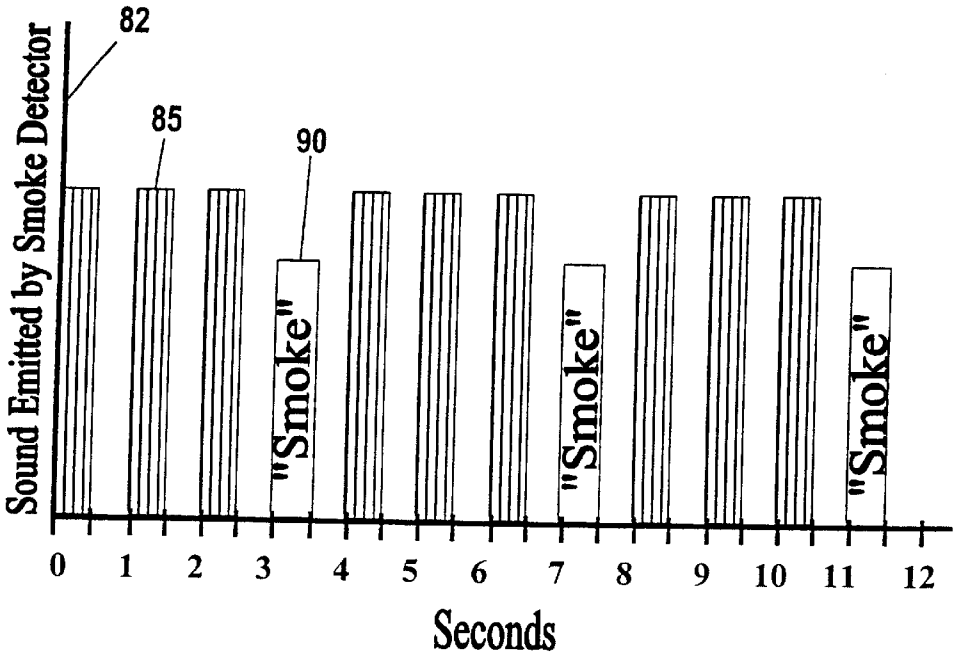
82
85
90
Sound Emitted by Smoke Detector
"Smoke"
"Smoke"
"Smoke"
0 1 2 3 4 5 6 7 8 9 10 11 12
Seconds

Fig. 4

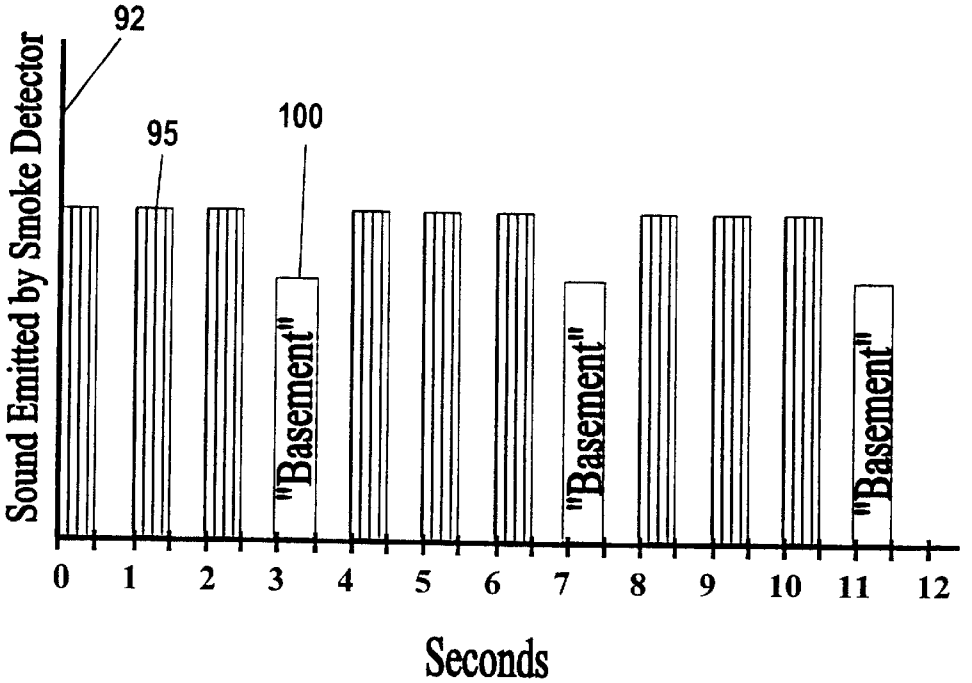
92
95
100
Sound Emitted by Smoke Detector
"Basement"
"Basement"
"Basement"
0 1 2 3 4 5 6 7 8 9 10 11 12
Seconds

Fig. 5

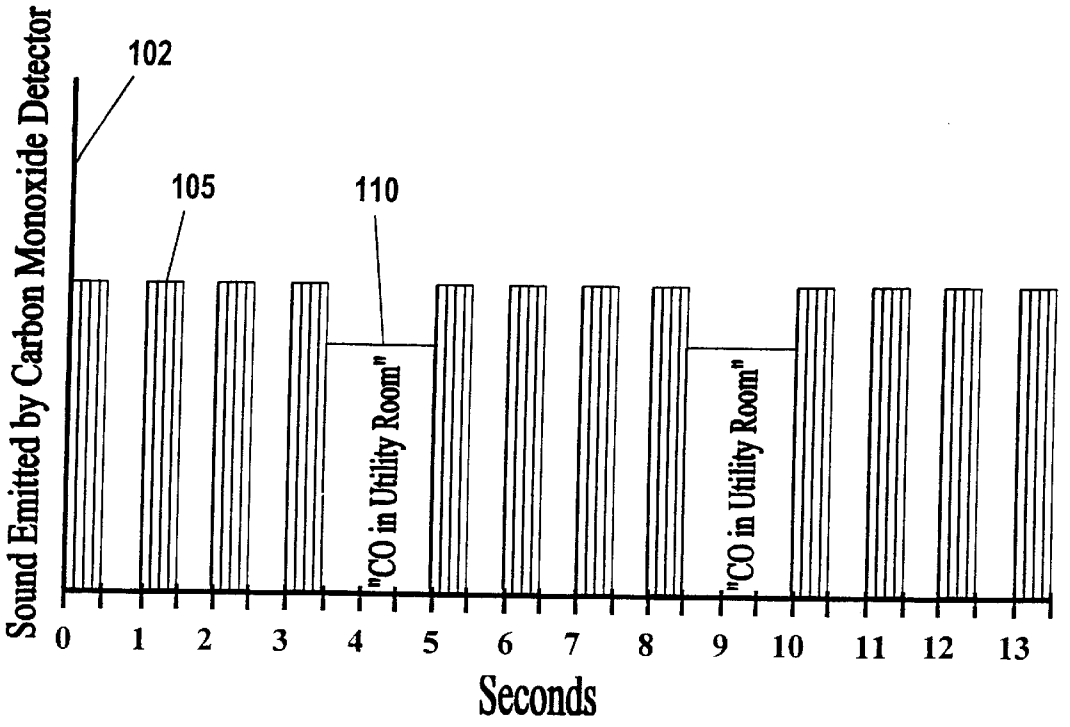
Sound Emitted by Carbon Monoxide Detector
102
105
110
"CO in Utility Room"
"CO in Utility Room"
0 1 2 3 4 5 6 7 8 9 10 11 12 13
Seconds

Fig. 6

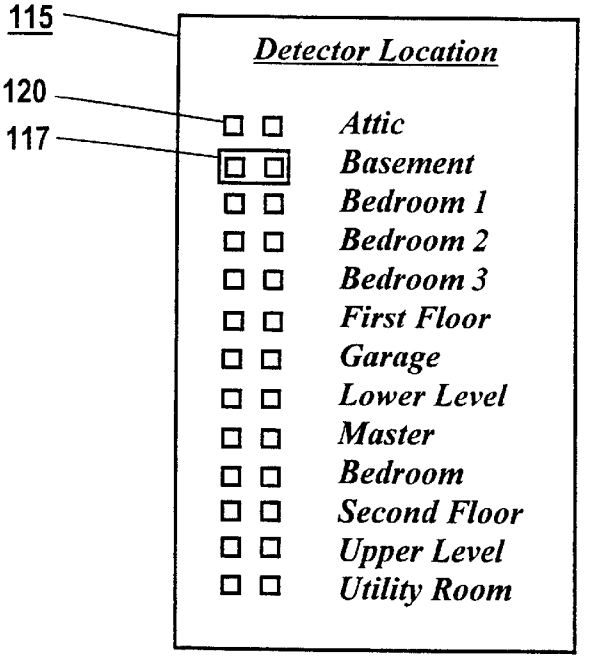
115
Detector Location
120
117
Attic
Basement
Bedroom 1
Bedroom 2
Bedroom 3
First Floor
Garage
Lower Level
Master
Bedroom
Second Floor
Upper Level
Utility Room

Fig. 7

ENVIRONMENTAL CONDITION DETECTOR WITH AUDIBLE ALARM AND VOICE IDENTIFIER

This application is a continuation of Ser. No. 09/651,454 filed Aug. 30, 2000, now U.S. Pat. No. 6,600,424; which was a continuation of Ser. No. 09/299,483, filed Apr. 26, 1999, now U.S. Pat. No. 6,144,310 which was a utility application claiming the benefit of the earlier filing date of Provisional Ser. No. 60/117,307 filed Jan. 26, 1999.

BACKGROUND FOR THE INVENTION

1. Field of Invention

The present invention relates to environmental condition detection for dwellings including smoke detection, carbon monoxide gas detection, natural gas detection, propane gas detection, combination smoke and carbon monoxide gas detection, etc. such that the audible tonal pattern alarm emitted by a detector sensing an abnormal environmental condition is accompanied by a pre-recorded voice message that clearly indicates the specific type of condition sensed or the specific location of the detector sensing the condition, or both.

2. Background

With the widespread use of environmental condition detectors such as smoke detectors, carbon monoxide detectors, natural gas detectors, propane detectors, etc. in residences and businesses today, there is a critical need to provide definite distinction between the tonal pattern alarms emitted by each type of detector so that the occupants of the involved dwelling are immediately made aware of the specific type of condition detected along with its location so they can take the proper immediate action. Regulating and governing bodies for products of the home safety industry (National Fire Protection Association, Underwriters Laboratories, etc.) have recently regulated the tonal patterns emitted from such environmental detectors, however, much confusion still exists among the very similar tonal pattern alarms emitted by various detector types. This is particularly true for those individuals partially overcome by the environmental condition, those asleep when the alarm occurs, young children, or the elderly. Therefore, a need exists whereby the environmental detector sensing an abnormal condition plays a recorded voice message stating the specific condition and/or location of the condition in addition to the required tonal pattern alarm. In conventional smoke detectors and carbon monoxide detectors, there are silent periods within the prescribed audible tonal pattern alarms where recorded verbal messages such as "smoke" or "CO" or "carbon monoxide" or "smoke in basement" or "utility room" (as examples) may be played during this alarm silence period to clearly discriminate between the types of audible alarms and environmental conditions and where the environmental condition was detected. Such messages immediately provide the occupants in an involved dwelling important safety information during potentially hazardous environmental conditions. The occupants can make informed decisions about how to respond to the alarm condition. Occupants residing in the uninvolved area of the dwelling may choose to assist those residing in the involved area depending on the location and type of condition detected. The type of environmental condition sensed or the location of the condition, or both are immediately made clear through the use of recorded voice messages in addition to conventional tonal pattern alarms.

DISCUSSION OF PRIOR ART

While there are inventions in the prior art pertaining to emergency alarm systems utilizing verbal instructions none

are known to the inventor which use a combination of tonal pattern alarms and factory pre-recorded voice messages with function or intent to clearly and specifically identify and clarify which type of environmental condition is present in a dwelling. Nor are there known inventions that use such pre-recorded voice messages to specifically identify the location of the environmental condition sensed by environmental condition detectors in dwellings without the use of a central control unit.

Morris (U.S. Pat. No. 5,587,705) describes a wireless smoke detector system using a minimum of two smoke detectors to indicate the location of the smoke detector sensing the smoke through coded alarm patterns. The present invention does not use wireless communication between detectors; each detector may operate without any others or may operate as a hardwired system with interconnected units for those powered by 120VAC. Fray (U.S. Pat. No. 5,663,714) describes a warning system for giving user-recorded verbal instructions during a fire. Fray teaches an object of his invention is to warn individuals of the presence of smoke and fire and to provide verbal instructions and guidance as how to escape the hazard. Routman et al (U.S. Pat. No. 5,349,338) describe a fire detector and alarm system that uses personally familiar user-recorded verbal messages specifically for a small child or adult in need of verbal instructions during the presence of a fire. Chiang (U.S. Pat. No. 5,291,183) describes a multi-functional alarming system using a microphone to sense ambient conditions and user-recorded verbal instructions for indicating the way to escape a fire. Kim (U.S. Pat. No. 4,816,809) describes a speaking fire alarm system that uses a central control system with remote temperature sensors. Haglund et al (U.S. Pat. No. 4,282,519) describe a hardwired smoke detector system whereby two audible alarm codes are indicated to determine whether the smoke was detected locally or not. Only two possible alarm patterns are used and no voice message is used with Haglund's hardwired system. Molinick and Sheilds (U.S. Pat. No. 4,288,789) describe an oral warning system for monitoring mining operations that uses a plurality of non-emergency condition sensors and second sensors for detecting emergencies. The patent further describes the use of a single and system-central multiple-track magnetic tape player for storing the verbal messages and links the alarm system to control the operation of mechanical devices (mining conveyor belts, etc.) during emergency conditions when verbal messages are played.

Additionally, Morris (U.S. Pat. No. 5,587,705), Fray (U.S. Pat. No. 5,663,714), Routman et al (U.S. Pat. No. 5,349,338), Chaing (U.S. Pat. No. 5,291,183), Kim (U.S. Pat. No. 4,816,809), and Haglund et al (U.S. Pat. No. 4,282,519) do not recite the specific use of factory pre-recorded voice messages to indicate the specific location of the environmental condition, or the use of voice messages to identify the specific type of environmental condition detected, or the use of a plurality of interconnected detectors emitting identical verbal messages, or a selectable means to define the installation location of the detector, all of which are taught in the present invention and afford significant safety advantages. While Molinick and Shields (U.S. Pat. No. 4,288,789) refer to verbally describing an emergency condition in mining operations, their patent teaches of a much more complex system than the present invention and describes a central control system with multiple stages of various configuration sensors and the use of user-recorded voice messages. Furthermore, the patent does not describe a selectable coding means to define the installation location of the sensors.

All known prior art providing user-recorded verbal instructions on how to escape a hazardous condition has become impractical for use in dwellings in view of the recent National Fire Protection Association (NFPA) and Underwriters Laboratories (UL) regulations that require a maximum silence period between tonal alarm patterns of 1.5 seconds (Ref UL2034, UL217, NFPA72 and NFPA720). This period of time is sufficient for the present invention to verbally indicate the type and location of the sensed environmental condition but is unlikely to be useful to provide detailed instructions, as taught in the prior art, to occupants on how to respond to a hazardous condition.

The present invention employs either single station environmental condition detectors or a system comprising direct, hardwired communication links between a plurality of environmental condition detectors to provide a tonal pattern alarm with pre-recorded voice message information regarding the specific type of environmental condition detected or the specific location of the detector sensing the environmental condition, or both, all without the need of a centralized control unit. For detector embodiments using pre-recorded voice messages to indicate the location of the detected condition, each detector is set-up by the user during installation to define the physical location of the detector within the dwelling according to pre-defined location definitions pre-programmed into the electronic storage media. The recorded voice messages are pre-recorded into the electronic storage media during manufacture and are not normally changeable by the user. In view of the recent National Fire Protection Association and Underwriters Laboratories regulations for tonal pattern alarms, it is not practical to have the user record their own sounds during the silent periods of the tonal pattern. The user may choose to record other alarm sounds that would violate the regulations governing such tonal patterns and compromise the safety features of the device. The use of factory pre-recorded voice messages alleviates this problem.

It is emphasized that no other related prior art known to the inventor makes use of factory pre-recorded voice messages to indicate the location of the environmental condition or the type of condition or both. Sufficient addressable electronic memory is available in the preferred embodiment of the invention to afford numerous pre-recorded voice messages.

SUMMARY OF THE INVENTION

Described herein is the Environmental Condition Detector with Audible Alarm and Voice Identifier invention, which comprises an environmental condition detector, such as a smoke detector, carbon monoxide gas detector, natural gas detector, propane detector, or any combination detector thereof, which detects the desired environmental condition(s) by those methods well known and described in the art and emits the prescribed audible tonal pattern alarm in accordance with the industry's empowered governing bodies' (National Fire Protection Association, Underwriters Laboratories etc.) criteria for such environmental conditions. Simultaneously, the environmental condition detector sensing the condition emits a verbal message to indicate, through a recorded voice message or synthesized human voice, the condition being sensed. This recorded voice message is emitted simultaneously with the audible tonal pattern alarm so as normally to occur during silent segments of the prescribed tonal pattern alarm. For example, for the condition of smoke detection, the smoke detector emits the following combination audible tonal pattern alarm (Beep) and recorded voice message "Beep - - - Beep - - - Beep - - - 'SMOKE' - - - Beep - - - Beep - - - Beep - - - 'SMOKE' - - -" in a periodic manner for as long as the environmental condition is detected. As a second example, for carbon monoxide detection, a carbon monoxide detector emits "Beep - - - Beep - - - Beep - - - Beep - - - 'CO' - - - Beep - - - Beep - - - Beep - - - 'CO'- - - ". As a third example, for smoke detection with the location identifier, a smoke detector emits "Beep - - - Beep - - - Beep - - - "SMOKE IN BASEMENT' - - -Beep - - - Beep - - - Beep - - - 'SMOKE IN BASEMENT' - - - ". As a fourth example, for carbon monoxide detection with a voice location only identifier, a carbon monoxide detector emits ""Beep - - - Beep - - - Beep - - - Beep - - - 'Utility Room' - - - Beep - - - Beep - - - Beep - - - Beep - - - 'Utility Room' - - - ".

OBJECTS AND ADVANTAGES OF THE PRESENT INVENTION

It is one object of the present invention to provide environmental condition detectors that function as single station (non-interconnected) detector units equipped to emit a tonal pattern alarm and a recorded voice message. The recorded voice message clearly identifies the location of the environmental condition detector sensing the condition, or describes the type of environmental condition that has been detected, or both, as illustrated in the above, non-exhaustive examples. The single station detector embodiment is battery powered or 120VAC powered. User-selectable coding switches or jumpers permit the user to define the physical location of the single station unit within the dwelling. No other related prior art is known to the inventor that uses factory pre-recorded voice messages in combination with conventional tonal pattern alarms to indicate the specific type or specific location, or both, of an abnormal environmental condition as related to single station units.

It is another object of the present invention to provide an environmental condition detection system where one detector sensing an environmental condition causes all other interconnected detectors to emit identical tonal pattern alarms and recorded voice messages. The hardwired, directly interconnected detectors forming the environmental condition detection system are 120VAC powered with optional battery back-up and use the recorded voice message to identify the location of the environmental condition detector sensing the condition, or to describe the type of environmental condition that has been detected, or both, as illustrated in the above, non-exhaustive examples. The environmental condition detection system embodiments of the present invention do not require the use of a centralized control unit (control panel) between detectors. No other related prior art is known to the inventor that uses factory pre-recorded voice messages in combination with conventional tonal pattern alarms to indicate the specific type or specific location, or both, of an abnormal environmental condition as related to a directly interconnected environmental condition detector system having no central control unit or panel.

A major advantage of both the single station embodiment and the system embodiment of the present invention is the use of factory pre-recorded voice messages that fit within the National Fire Protection Association and Underwriters Laboratories specified 1.5 second silence period of the standard smoke detector and carbon monoxide detector tonal pattern alarms. Prior art using user-recorded voice messages are intended to indicate directions on how to escape the hazard or how to respond to a hazard. Such messages would not practically fit into the maximum 1.5 second silent time period in conventional tonal alarm patterns for smoke detec-

tors and carbon monoxide detectors used in dwellings. The allowance for a user to record his or her own messages may actually add to the confusion and danger that results during an alarm condition if the user chooses to record additional alarm sounds or errs in the directions given in the message on how to properly respond to a hazardous condition.

BRIEF DESCRIPTION OF THE DRAWINGS

FIG. **1** is a sketch of a preferred embodiment of the Environmental Condition Detector with Alarm and Voice Identifier according to the invention.

FIG. **2** is a sketch of a preferred embodiment of the electronic circuitry for the interconnected system embodiment of the Environmental Condition Detector with Alarm and Voice Identifier according to the invention.

FIG. **3** is a sketch of a second preferred embodiment of the electronic circuitry for the interconnected system embodiment of the Environmental Condition Detector with Alarm and Voice Identifier according to the invention.

FIG. **4** shows an example audible tonal pattern alarm and recorded voice message combination used for the Environmental Condition Detector with Alarm and Voice Identifier configured as a smoke detector and using a recorded voice message as an environmental condition type identifier according to the invention.

FIG. **5** shows an example audible tonal pattern alarm and recorded voice message combination used for the Environmental Condition Detector with Alarm and Voice Identifier configured as a smoke detector using a recorded voice message as an environmental condition location identifier according to the invention.

FIG. **6** shows an example audible tonal pattern alarm and recorded voice message combination used for the Environmental Condition Detector with Alarm and Voice Identifier configured as a carbon monoxide detector and using a recorded voice message as an environmental condition type identifier and location identifier according to the invention.

FIG. **7** shows one method for the user to select the installation location coding of the Environmental Condition Detector with Alarm and Voice Identifier according to the invention.

DETAILED DESCRIPTION OF THE INVENTION

A preferred embodiment of the Environmental Condition Detector with Alarm and Voice Identifier **6** is shown in FIG. **1**. The unit is powered by a battery **40** and/or by standard 120VAC (not shown). The environmental condition sensor and alarm unit **10** (conventional smoke detector, carbon monoxide detector, combination smoke detector and carbon monoxide detector natural gas detector, propane detector, abnormal temperature etc.) is any sensor type(s) utilizing environmental detection methods and alarm devices typically known in the art of smoke detectors, carbon monoxide detectors and other hazard detectors. Upon sensing the environmental condition, the environmental condition sensor and alarm unit **10** sounds its tonal pattern alarm to indicate that an environmental condition has been sensed in the immediate area. The alarm pattern is a prescribed audible tonal pattern alarm corresponding to the environmental condition as set forth by the empowered governing body (National Fire Protection Association, Underwriters Laboratories etc.). The interface and control unit **20** electronically interfaces with the environmental condition sensor and alarm unit **10** and controls the timing of a recorded voice message that is emitted simultaneously with the audible tonal pattern alarm such that the recorded voice message is emitted only during the period when the audible tonal pattern alarm cycles through a silent period. In one embodiment, an electronic signal frequency counter (not shown) is used to determine when the silent period of the audible alarm is occurring. The recorded voice message or synthesized human voice message is factory-recorded on an electronic storage media **30** such as, but not limited to, a ROM device. The recorded voice message is emitted through a speaker or other audio transducer **70**. For the embodiments of the invention requiring identification of the location of the environmental condition detector sensing the environmental condition, a selectable coding apparatus **50** (jumper selector or DIP switch) which connects to the interface and control unit **20** is provided to select one of several predefined physical locations of the environmental condition detectors within a residence. Recorded voice messages to identify physical locations consistent with the position of the selectable coding apparatus **50** are stored on the electronic storage media **30**. The selectable coding apparatus **50** is set to correspond to the location within the dwelling where the particular environmental condition detector **6** is installed. A language code selector (jumper set or DIP switch) **60** is used to choose the language type (English, Spanish, etc.) used by the recorded voice. For interconnected 120VAC units, when one environmental condition detector sounds its tonal pattern alarm and recorded voice message, all interconnected units will sound identical tonal pattern alarms and recorded voice messages in temporal phase. For the environmental condition detection system embodiment, an interconnecting conductor set **80** sends and receives a coded electrical signal encoded and decoded by the interface and control unit **20** by the sending and receiving detector, respectively. The coding of the signal sent over the interconnecting conductor set determines what specific recorded voice message is played from the electronic storage media **30** at the interconnected but remotely located environmental condition detectors. Another embodiment of the invention shown in FIG. **3** uses several interconnection conductors which alleviates the need for electrical encoding and decoding of the signal sent and received over the interconnecting conductor set **80**.

Shown in FIG. **2** is a sketch of a preferred embodiment of the electronic circuitry for one detector unit of the interconnected system embodiment of the Environmental Condition Detector with Alarm and Voice Identifier. The environmental condition sensor and alarm unit **10** connects to the interface and control unit **20** to trigger the monostable multivibrator **21** for a predetermined period of time when an environmental condition is detected. The monostable multivibrator **21** enables the signal encoder **22** to send a coded electrical signal to the local signal decoder **23** and to all other signal decoders of interconnected detectors hardwired linked together through the conductor set **80** shown in FIG. **1**. Upon receiving a local or remote encoded signal, the signal decoder **23** decodes the signal and validates or rejects the signal. Upon validation of a received signal, within each interconnected detector, the signal decoder **23** enables and addresses the electronic voice memory integrated circuit **31** to emit a recorded voice message verbally describing the location or type, or both, of the environmental condition sensed. All recorded voice messages emitted by the interconnected detector units connected through the conductor set **80** via electrical conductor connector **37** are in temporal phase. A selectable coding apparatus of switches or jumpers **51** defines the physical installation location of each envi-

ronmental condition detector through pre-defined location designations illustrated in FIG. **7**. A language selector switch apparatus **60** is used to select which language is used during the playing of the recorded voice messages. The recorded voice message is played through a speaker **70**.

Shown in FIG. **3** is a sketch of a second preferred embodiment of the electronic circuitry for one detector unit for the interconnected system embodiment of the Environmental Condition Detector with Alarm and Voice Identifier. The environmental condition sensor and alarm unit **10** connects to the interface and control unit **20** to trigger the monostable multivibrator **21** for a predetermined period of time when an environmental condition is detected. The monostable multivibrator **21** enables the electronic voice memory integrated circuit **31** to emit a recorded voice message verbally describing the location or type, or both, of the environmental condition sensed. All detector units within the interconnected system share common electrical connection to the address bits on each detector unit's electronic voice memory integrated circuit **31** through a multiple conductor connector interface **35** which results in all detector units emitting identical recorded voice messages in temporal phase. A selectable coding apparatus of switches or jumpers **52** defines the physical installation location of each environmental condition detector through pre-defined location designations illustrated in FIG. **7**. A language selector switch apparatus **60** is used to select which language is used during the playing of the recorded voice messages. The recorded voice message is played through a speaker **70**.

Shown in FIG. **4** is an example alarm timing plot of the sound emitted **82** by an environmental condition detector using both an audible tonal pattern alarm **85** and a recorded voice message **90** to convey information about the specific environmental condition detected. In the example exhibited in FIG. **2**, the environmental condition detector embodiment is a smoke detector using voice as an environmental condition type identifier only. The recorded voice message **90** is inserted into the defined silence periods of the prescribed audible tonal pattern alarm **85** consistent with conventional smoke detector alarms.

Shown in FIG. **5** is an example alarm timing plot of the sound emitted **92** by an environmental condition detector using an audible tonal pattern alarm **95** to convey the specific type of environmental condition and a recorded voice message **100** to convey the location of the detected environmental condition. In the example exhibited in FIG. **5**, the environmental condition detector embodiment is a smoke detector using voice as an environmental condition location identifier only. The recorded voice message **100** is inserted into the defined silence periods of the prescribed audible tonal pattern alarm **95** consistent with conventional smoke detector alarms.

Shown in FIG. **6** is an example alarm timing plot of sound emitted **102** by an environmental condition detector using an audible tonal pattern alarm **105** and a recorded voice message **110** to convey the specific type of environmental condition detected and the location of the environmental condition detector sensing the environmental condition. In the example exhibited in FIG. **6**, the environmental condition detector embodiment is a carbon monoxide detector using voice as both an environmental condition type identifier and location identifier. The recorded voice message **110** is inserted into the defined silence periods of the prescribed audible tonal pattern alarm **105** consistent with conventional carbon monoxide alarms. The example tonal pattern alarms and recorded voice messages are illustrative and not intended to provide an exhaustive exhibit of all possible tonal alarm patterns and recorded voice messages.

Shown in FIG. **7** is a selectable coding apparatus **115** for the user to select one of the pre-defined locations of the Environmental Condition Detector with Alarm and Voice Identifier embodiment when and where it is installed in a dwelling. Selectable coding means such as a jumper **117** on DIP header pins **120** or DIP switches (not shown) are simple methods to define the installation location of a detector embodiment. Typical dwelling locations are shown in FIG. **7** and are not intended to exhibit an exhaustive list.

The various preferred embodiments described above are merely descriptive of the present invention and are in no way intended to limit the scope of the invention. Modifications of the present invention will become obvious to those skilled in the art in light of the detailed description above, and such modifications are intended to fall within the scope of the appended claims.

I claim:

1. A self-contained ambient condition detector comprising:

an ambient condition sensor;

control electronics coupled to the sensor and responsive thereto wherein in response to a predetermined ambient condition, a user unalterable, pre-stored, audible, alarm identifying tonal output pattern is emitted wherein the pattern includes a plurality of spaced apart predetermined silent intervals bounded by pluralities of spaced apart tones wherein the tones are interrupted and are spaced apart from one another by silent intertonal spacing intervals of a common duration and wherein the common duration is always shorter than each of the silent intervals and including voice output circuitry and a plurality of pre-stored, user unalterable, verbal alarm location output messages, one of the pre-stored messages is user selectable and verbalizes the selected location, where the control electronics, in response to the predetermined ambient condition, causes the audible tonal pattern to be emitted, and, causes the selected location message to be repetitively emitted in respective silent intervals; and

a common housing for the sensor, the electronics, the output circuitry and a power supply.

2. A detector as in claim **1** wherein the sensor is a fire sensor and including a pre-stored fire specifying, verbal message to reinforce a respective tonal output pattern indicative of sensed fire.

3. A detector as in claim **2** wherein the fire indicating tonal output pattern defines groups of substantially identical output tones with a common intertonal spacing of the common duration and wherein the silent intervals are at least twice as long as the common duration.

4. A detector as in claim **2** wherein each tone of the tonal pattern has a duration on the order of 0.5 seconds.

5. A detector as in claim **1** wherein the sensor is a gas sensor and including a gas specifying pre-stored verbal message to reinforce a respective tonal output pattern, indicative of sensed gas.

6. A detector as in claim **5** wherein the gas indicating tonal output pattern defines groups of four substantially identical output tones with common intertonal spacing of a first duration wherein the silent intervals are longer.

7. A detector as in claim **1** wherein the power supply comprises at least one of an AC/DC supply or a battery.

8. A detector as in claim **7** wherein the voice circuitry includes semiconductor storage circuitry for the pre-stored verbal message.

9. A detector as in claim **8** wherein at least one alarm-type specifying verbal message is also pre-stored in the semiconductor storage circuit.

10. A detector as in claim 9 wherein the electronics, in response to the predetermined ambient condition, emits the tonal output pattern and also repetitively emits first and second audible verbal output messages in respective silent intervals indicative of alarm type and location.

11. A detector as in claim 10 which includes a manually operable location specifying element.

12. A detector as in claim 1 wherein the voice circuitry includes semiconductor storage circuitry for the pre-stored message.

13. A detector as in claim 12 which includes a second sensor carried by the housing coupled to the control electronics, and a second condition warning audible message stored in the semiconductor storage circuitry.

14. A detector as in claim 13 wherein in response to sensing the second condition, the control electronics repetitively emits the second warning verbal message.

15. A detector as in claim 1 wherein representations of the location specifying messages are pre-stored in at least two different languages.

16. A detector as in claim 15 wherein the sensor is selected from a class which includes a fire sensor, and a gas sensor.

17. A detector as in claim 15 which includes at least two pre-stored alarm-type verbal counterparts wherein the verbal counterparts are in first and second different languages.

18. A detector as in claim 17 which includes a manually operable, language specifying element.

19. A detector comprising:

a housing;

a fire sensor carried by the housing;

a control element coupled to the sensor, the element includes circuitry for detecting a fire;

an alarm indicating audible output device coupled to the control element wherein the control element, in response to a detected fire drives the output device to repetitively emit interrupted groups of fire indicating tones, the members of the groups are spaced apart from one another by a first time interval and the groups are spaced apart by silent, longer second time intervals;

semiconductor storage for at least a word indicative of the presence of fire where in response to a detected fire the control element repetitively injects the stored fire indicating word into only the second time intervals between groups of fire alarm indicating tones, where the tonal patterns are predefined, and not user alterable and wherein the output word is pre-stored and not user alterable; and

which includes at least one pre-stored verbal counterpart to the pre-stored verbal message where the pre-stored verbal message and the verbal counterpart are in two different languages.

20. A detector as in claim 19 wherein the control element includes an interconnect port for receipt of alarm indicating signals from at least one remotely located detector.

21. A detector as in claim 20 wherein the control element includes circuitry responsive to received alarm indicating signals for repetitively emitting the fire alarm tones and intervening fire indicating verbal output word during the second time intervals.

22. A detector as in claim 21 wherein the received alarm indicating signals from the at least one remotely located detector include specific information such that the control element of the detector receiving the alarm indicating signals drives the output device to emit the same tonal pattern and verbal message as the at least one remotely located detector sensing the ambient condition.

23. A detector as in claim 19 which includes a second condition sensor and an associated verbal, condition warning phrase stored in the semiconductor storage.

24. A detector as in claim 23 wherein the control element emits the associated verbal condition warning phrase in response to a predetermined output from the second sensor.

25. An apparatus for the detection and enunciation of hazardous conditions within an environment comprising:

at least first and second sensors responsive to respective first and second conditions in the environment;

an alarm circuit, responsive to the sensors for generating at least a first alarm pattern;

voice synthesizing circuitry responsive to the sensors for generating at least a first voice message;

control circuitry coupled to the alarm circuit and the voice synthesizing circuitry with at least the first alarm pattern and the first voice message sequentially emitted in response to the presence of the first alarm condition where the alarm patterns and the voice messages are pre-set and not user alterable and are emitted by first and second different respective output transducers.

26. An apparatus as in claim 25 where the first sensor comprises a smoke sensor and the second sensor comprises a gas sensor.

27. An apparatus as in claim 25, where the alarm circuit generates a second, different alarm pattern, the first alarm pattern is associated with the condition to which the first sensor responds and the second alarm pattern is associated with the condition to which the second sensor responds.

28. An apparatus as in claim 27 where the voice synthesizing circuitry includes further circuitry for generating at least a second voice message with the second alarm pattern and the second voice message sequentially emitted in response to the presence of the second alarm condition.

29. An apparatus as in claim 28 where the first sensor is a fire sensor, the second sensor is a gas sensor with the first voice message indicative of fire and the second voice message indicative of gas.

30. An apparatus as in claim 29 where the alarm patterns each include a plurality of spaced apart predetermined silent intervals bounded by pluralities of spaced apart tones, the members of the respective pluralities of tones are spaced apart from one another by silent intertonal spacing intervals of a respective common duration, the common duration is always shorter than the respective silent intervals.

31. An apparatus as in claim 30 where the voice synthesizing circuitry generates the first voice message in a selected one of at least two languages.

32. An apparatus as in claim 31 includes a manually settable language selecting element.

33. An apparatus as in claim 25 where the voice synthesizing circuitry generates the first voice message in a selected one of at least two languages.

34. An apparatus as in claim 33 which includes a manually settable language selecting element.

35. A self-contained ambient condition detector comprising:

an ambient condition sensor;

control electronics coupled to the sensor and responsive thereto where in response to a predetermined ambient condition, a user unalterable, pre-stored, audible, alarm identifying tonal output pattern is emitted, the pattern includes a plurality of spaced apart predetermined silent intervals bounded by pluralities of spaced apart tones wherein the tones are interrupted and are spaced

apart from one another by silent intertonal spacing intervals of a common duration and wherein the common duration is always shorter than each of the silent intervals and including voice output circuitry, the voice circuitry includes a pre-stored, user unalterable, verbal alarm-type output message where the pre-stored message is associated with the tonal output pattern and verbalizes the respective alarm type and where the control electronics, in response to the predetermined ambient condition intermittently activates a first transducer to emit the audible tonal pattern and repetitively activates a second different transducer to emit the verbal alarm-type in respective silent intervals; and

a common housing which carries the sensor, the electronics, the voice output circuitry, the transducers and a power supply without any recording circuitry.

* * * * *

US007158040B2

(12) **United States Patent**
Morris

(10) **Patent No.: US 7,158,040 B2**
(45) **Date of Patent: *Jan. 2, 2007**

(54) **ENVIRONMENTAL CONDITION DETECTOR WITH AUDIBLE ALARM AND VOICE IDENTIFIER**

(75) Inventor: **Gary J. Morris**, Morgantown, WV (US)

(73) Assignee: **Sunbeam Products, Inc.**, Boca Raton, FL (US)

(*) Notice: Subject to any disclaimer, the term of this patent is extended or adjusted under 35 U.S.C. 154(b) by 0 days.

This patent is subject to a terminal disclaimer.

(21) Appl. No.: **10/915,672**

(22) Filed: **Aug. 10, 2004**

(65) **Prior Publication Data**

US 2005/0007255 A1 Jan. 13, 2005

Related U.S. Application Data

(63) Continuation of application No. 10/396,068, filed on Mar. 25, 2003, now Pat. No. 6,784,798, which is a continuation of application No. 09/651,454, filed on Aug. 30, 2000, now Pat. No. 6,600,424, which is a continuation of application No. 09/299,483, filed on Apr. 26, 1999, now Pat. No. 6,144,310.

(60) Provisional application No. 60/117,307, filed on Jan. 26, 1999.

(51) **Int. Cl.**
G08B 17/10 (2006.01)

(52) **U.S. Cl.** **340/628**; 340/692; 340/384.71; 340/632

(58) **Field of Classification Search** 340/628, 340/629, 630, 632, 521, 522, 577, 578, 381, 340/691.2, 691.8, 384, 384.6, 384.71
See application file for complete search history.

(56) **References Cited**

U.S. PATENT DOCUMENTS

3,906,491 A 9/1975 Gosswiller et al.

(Continued)

FOREIGN PATENT DOCUMENTS

WO WO 90/01759 2/1990

OTHER PUBLICATIONS

National Fire Protection Association—NFPA72—National Fire Alarm Code 1996 Edition pp. 72-1 and 72-28 through 72-32; 72-79. 72-104 through 72-106 Quincy, MA USA.

(Continued)

Primary Examiner—Jeffery Hofsass
Assistant Examiner—Hoi C. Lau
(74) *Attorney, Agent, or Firm*—Lawrence J. Shrupoff

(57) **ABSTRACT**

Due to the presence of various environmental condition detectors in the home and businesses such as smoke detectors, carbon monoxide detectors, natural gas detectors, etc., each having individual but similar sounding alarm patterns, it can be difficult for occupants of such dwellings to immediately determine the specific type of environmental condition that exists during an alarm condition. The present invention comprises an environmental condition detector using both tonal pattern alarms and pre-recorded voice messages to indicate information about the environmental condition being sensed. Single-station battery-powered and 120VAC detectors are described as are multiple-station interconnected 120 VAC powered detectors. The pre-recorded voice messages describe the type of environmental condition detected or the location of the environmental condition detector sensing the condition, or both, in addition to the tonal pattern alarm. Provisions are made for multilingual pre-recorded voice messages.

9 Claims, 5 Drawing Sheets

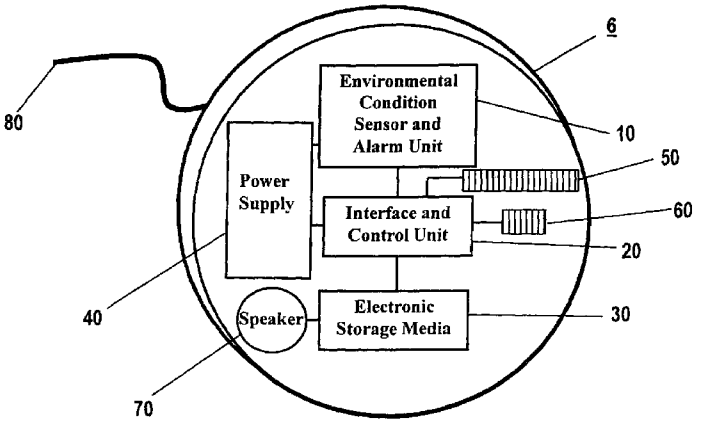

U.S. PATENT DOCUMENTS

4,065,767	A *	12/1977	Neuhof et al.	340/384.4
4,101,872	A	7/1978	Pappas	
4,141,007	A	2/1979	Kavasilios et al.	
4,160,246	A	7/1979	Martin et al.	
4,275,274	A	6/1981	English	
4,282,519	A	8/1981	Haglund et al.	
4,288,789	A	9/1981	Molinick et al.	
4,335,379	A	6/1982	Martin	
4,343,990	A	8/1982	Ueda	
4,350,860	A	9/1982	Ueda	
4,351,999	A	9/1982	Nagamoto et al.	
4,363,031	A	12/1982	Reinowitz	
4,365,315	A	12/1982	Jamnik	
4,366,873	A	1/1983	Levy et al.	
4,375,329	A	3/1983	Park	
4,389,639	A	6/1983	Torii et al.	
4,400,786	A	8/1983	Mandel et al.	
4,453,222	A	6/1984	Goszyk	
4,455,551	A	6/1984	Lemelson	
4,481,507	A	11/1984	Takiguchi et al.	
4,498,078	A	2/1985	Yoshimura et al.	
4,500,971	A	2/1985	Futaki et al.	
4,519,027	A	5/1985	Vogelsberg	
4,531,114	A	7/1985	Topol et al.	
4,560,978	A	12/1985	Lemelson	
4,572,652	A	2/1986	Tada et al.	
4,682,348	A	7/1987	Dawson et al.	
4,688,021	A	8/1987	Buck et al.	
4,698,619	A *	10/1987	Loeb	340/384.71
4,746,912	A *	5/1988	Clifford et al.	340/691.5
4,754,266	A	6/1988	Shand et al.	
4,810,996	A	3/1989	Glen et al.	
4,816,809	A *	3/1989	Kim	340/692
4,821,027	A	4/1989	Mallory et al.	
4,851,823	A	7/1989	Mori	
4,862,147	A	8/1989	Thomas	
4,894,642	A	1/1990	Ashbaugh et al.	
4,904,988	A *	2/1990	Nesbit et al.	340/628
4,940,965	A	7/1990	Umehara	
4,951,045	A	8/1990	Knapp et al.	
4,988,980	A	1/1991	Graham	
5,019,805	A	5/1991	Curl et al.	
5,103,206	A	4/1992	Yu	
5,117,217	A	5/1992	Nykerk	
5,153,567	A	10/1992	Chimento	
5,229,753	A	7/1993	Berg et al.	
5,291,183	A	3/1994	Chiang	
5,349,338	A	9/1994	Routman et al.	
5,379,028	A	1/1995	Chung	
5,460,228	A	10/1995	Butler	
5,506,565	A	4/1996	de Leon et al.	
5,548,276	A	8/1996	Thomas	
5,587,705	A	12/1996	Morris	
5,657,380	A	8/1997	Mozer	
5,663,714	A *	9/1997	Fray	340/692
5,673,023	A	9/1997	Smith	
5,724,020	A	3/1998	Hsu	
5,726,629	A	3/1998	Yu	
5,764,134	A	6/1998	Carr et al.	
5,786,749	A	7/1998	Johnson et al.	
5,786,768	A	7/1998	Chan et al.	
5,793,280	A	8/1998	Hincher	
5,798,686	A	8/1998	Schreiner	
5,841,347	A	11/1998	Kim	
5,846,089	A	12/1998	Weiss et al.	
5,856,781	A	1/1999	Michel et al.	
5,864,288	A	1/1999	Hogan	
5,874,893	A	2/1999	Ford	
5,877,698	A	3/1999	Kusnier et al.	
5,886,631	A	3/1999	Ralph	
5,894,275	A	4/1999	Swingle	
5,898,369	A	4/1999	Godwin	
5,905,438	A	5/1999	Weiss et al.	
5,914,650	A	6/1999	Segan	
5,936,515	A	8/1999	Right et al.	
5,986,540	A	11/1999	Nakagaki et al.	
6,043,750	A	3/2000	Mallory	
6,097,289	A	8/2000	Li et al.	
6,114,967	A *	9/2000	Yousif	340/690
6,121,885	A	9/2000	Masone et al.	
6,144,310	A *	11/2000	Morris	340/692
6,307,482	B1	10/2001	Le Bel	
6,323,780	B1	11/2001	Morris	
6,344,799	B1	2/2002	Walker	
6,600,424	B1 *	7/2003	Morris	340/628
6,624,750	B1 *	9/2003	Marman et al.	340/506
6,784,798	B1 *	8/2004	Morris	340/628

OTHER PUBLICATIONS

NFPA 720, Recommended Practice for the Installation of Household Carbon Monoxide (CO) Warning Equipment 1998 Edition.

UL 217 ISBN 0-7629-0062-8, Single and Multiple Station Smoke Alarms, Mar. 16, 1998-Feb. 21, 1997.

UL 2034 ISBN 0-7629-274-9, Single and Multiple Station Carbon Monoxide Alarms, Dec. 21, 1998-Oct. 29, 1996.

* cited by examiner

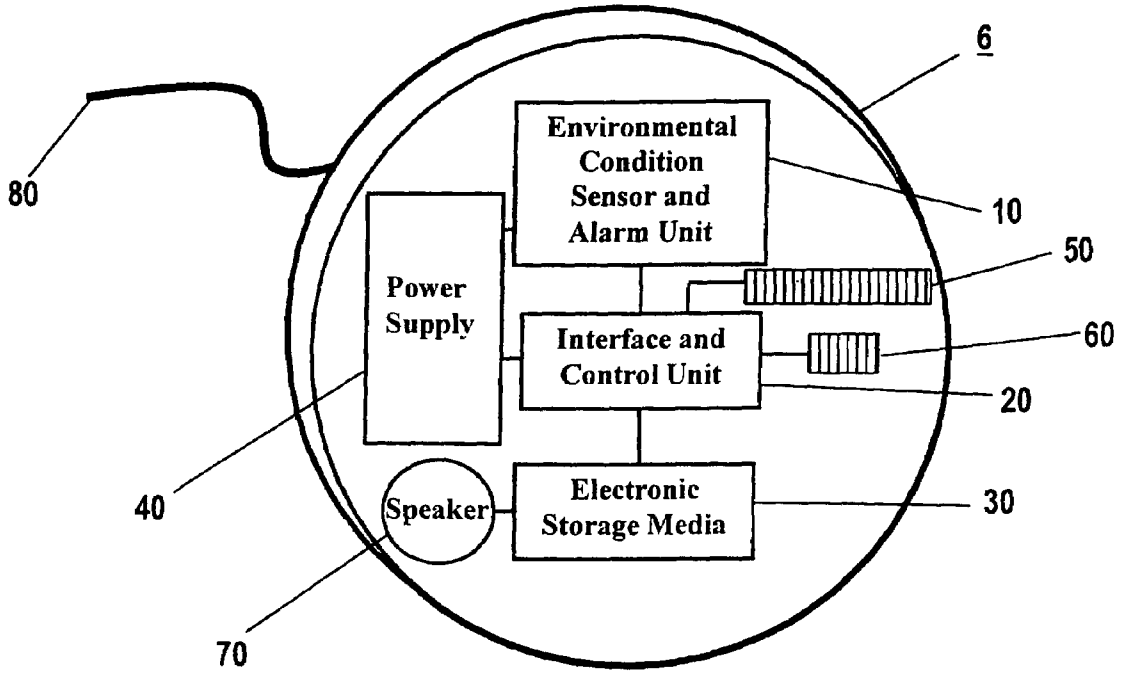
6
80
Environmental Condition Sensor and Alarm Unit
10
50
Power Supply
Interface and Control Unit
60
20
40
Speaker
Electronic Storage Media
30
70

Fig. 1

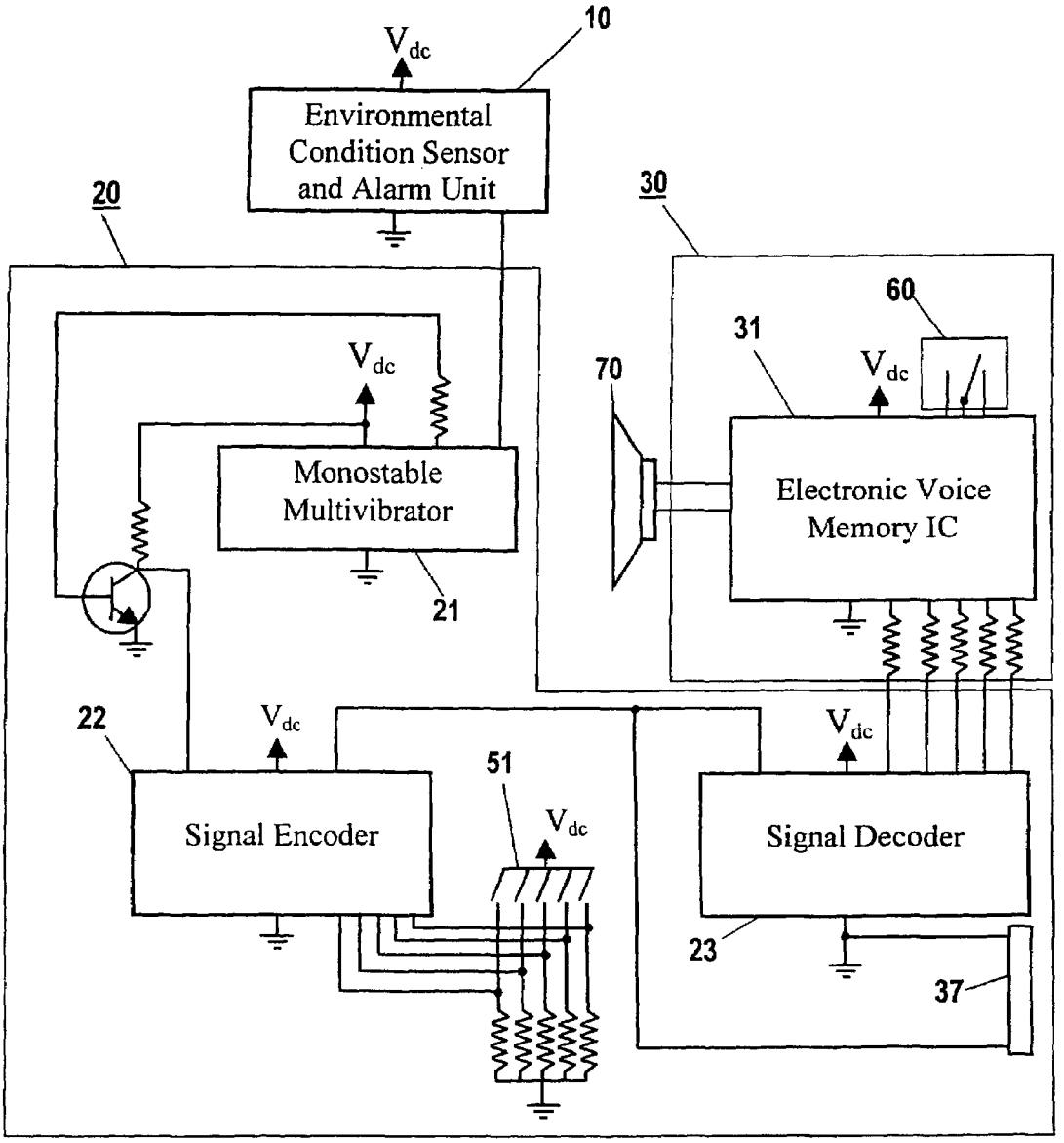
10
V_{dc}
Environmental Condition Sensor and Alarm Unit
20
30
60
31
70
V_{dc}
Monostable Multivibrator
21
Electronic Voice Memory IC
22
V_{dc}
51
V_{dc}
V_{dc}
Signal Encoder
Signal Decoder
23
37

Fig. 2

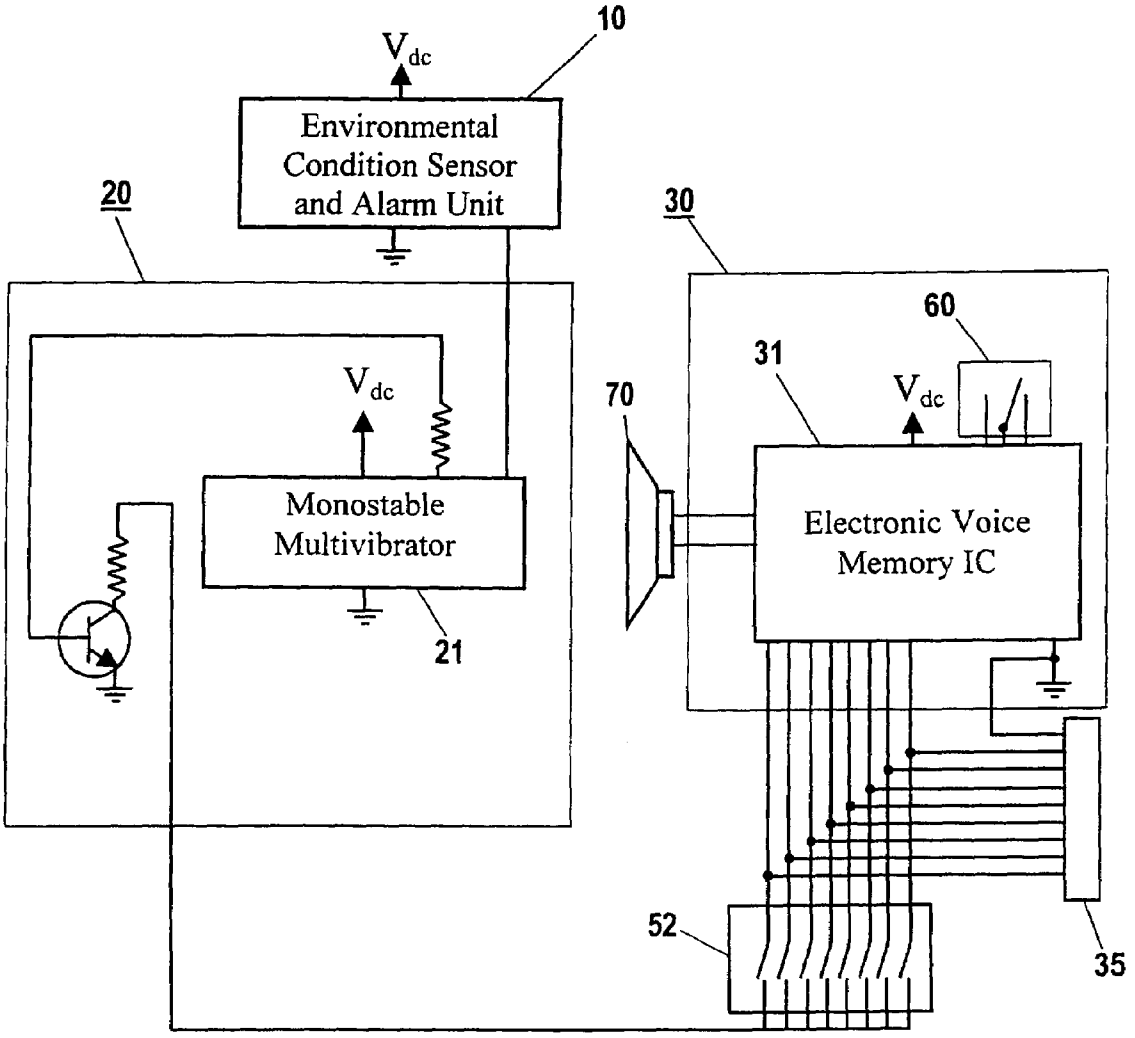
10
V_{dc}
Environmental Condition Sensor and Alarm Unit
20
30
60
31
V_{dc}
70
V_{dc}
Monostable Multivibrator
Electronic Voice Memory IC
21
52
35

Fig. 3

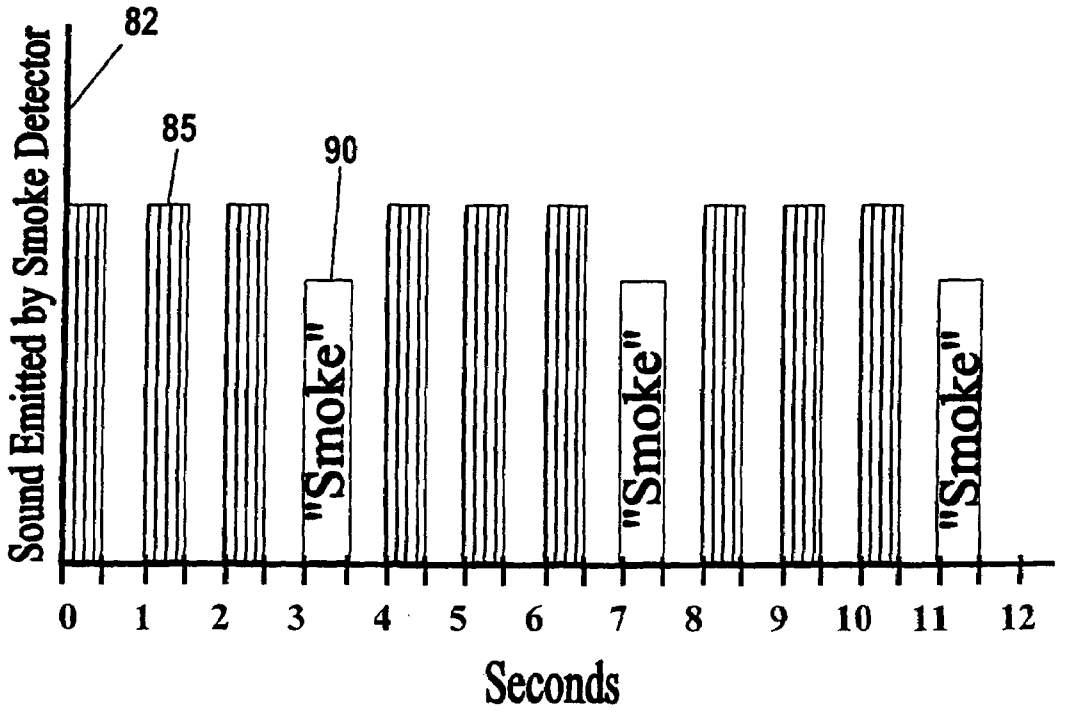
82
85
90
Sound Emitted by Smoke Detector
"Smoke"
"Smoke"
"Smoke"
0 1 2 3 4 5 6 7 8 9 10 11 12
Seconds

Fig. 4

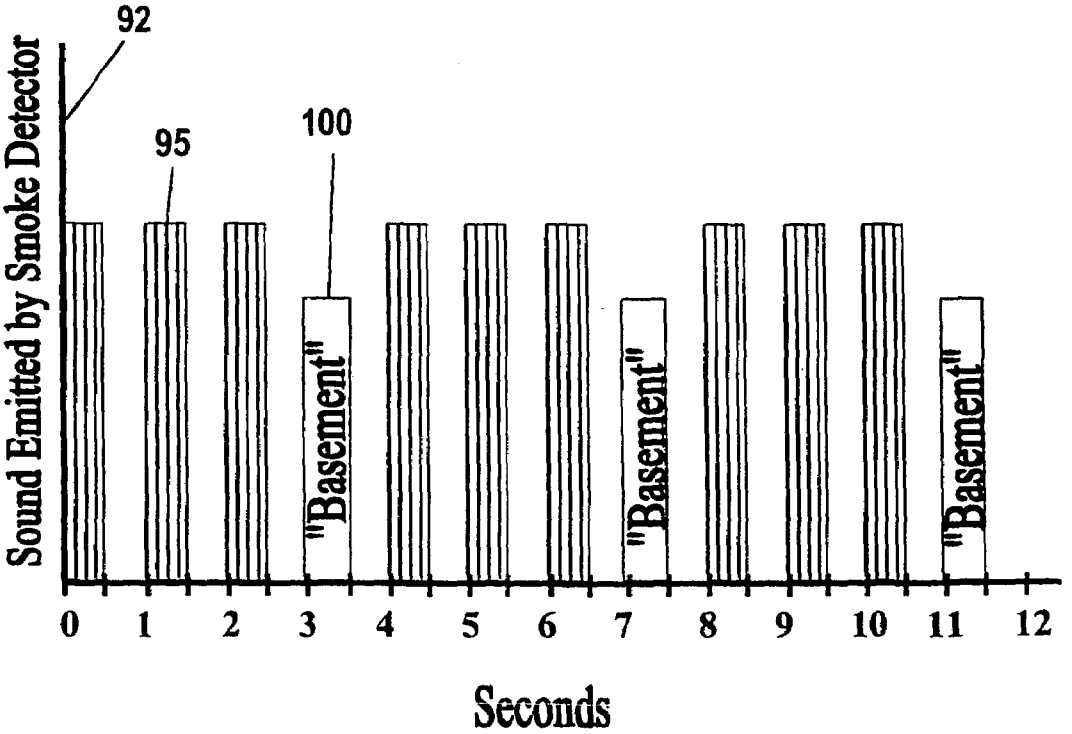
92
95
100
Sound Emitted by Smoke Detector
"Basement"
"Basement"
"Basement"
0 1 2 3 4 5 6 7 8 9 10 11 12
Seconds

Fig. 5

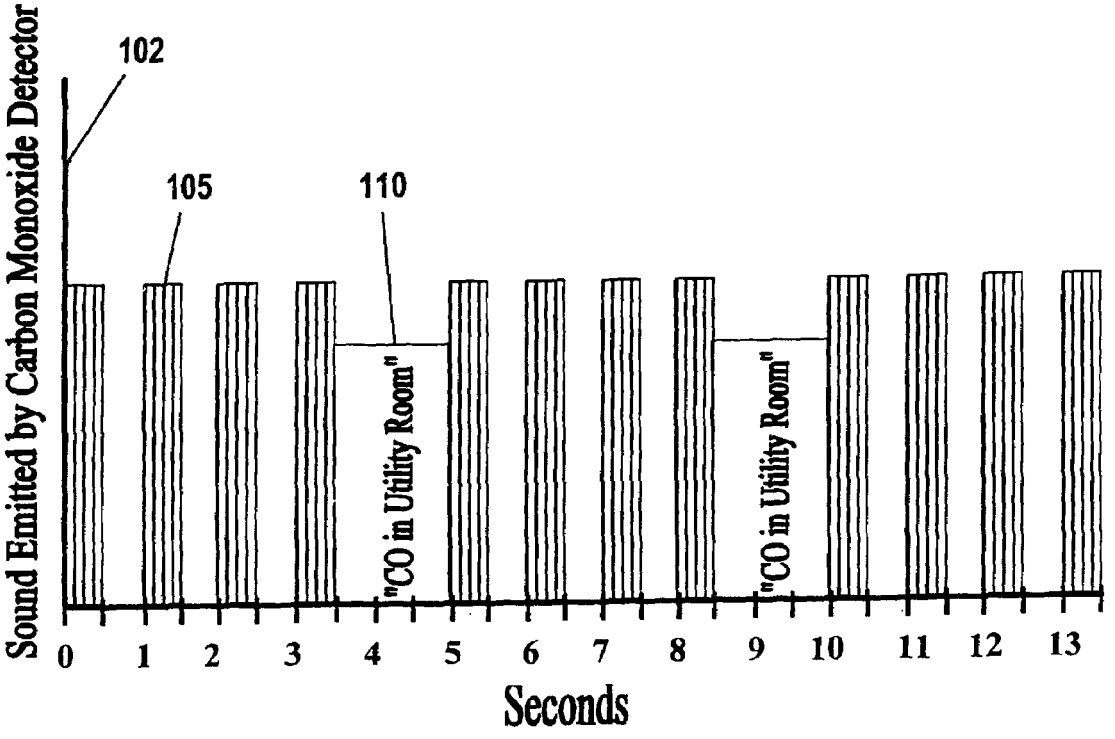
Sound Emitted by Carbon Monoxide Detector
102
105
110
"CO in Utility Room"
"CO in Utility Room"
0 1 2 3 4 5 6 7 8 9 10 11 12 13
Seconds

Fig. 6

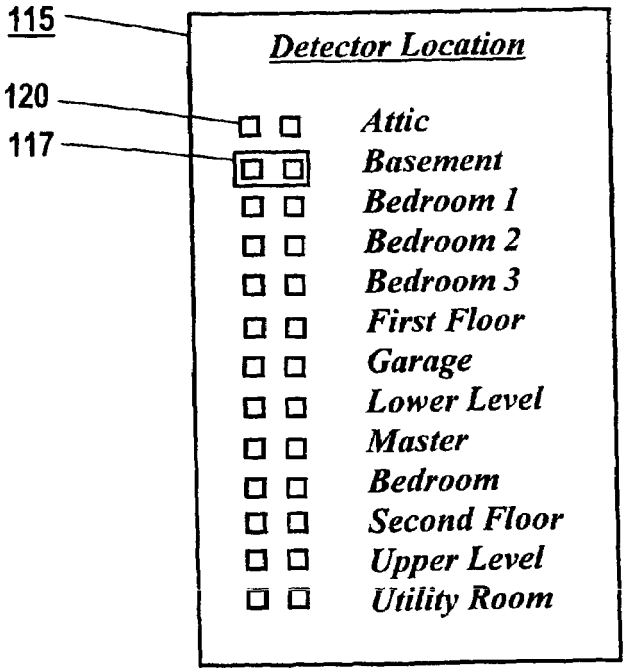
115
Detector Location
120
117
Attic
Basement
Bedroom 1
Bedroom 2
Bedroom 3
First Floor
Garage
Lower Level
Master
Bedroom
Second Floor
Upper Level
Utility Room

Fig. 7

ENVIRONMENTAL CONDITION DETECTOR WITH AUDIBLE ALARM AND VOICE IDENTIFIER

This application is a continuation of Ser. No. 10/396,068 filed Mar. 25, 2003, now U.S. Pat. No. 6,784,798; which is a continuation of Ser. No. 09/651,454 filed Aug. 30, 2000, now U.S. Pat. No. 6,600,424; which is a continuation of Ser. No. 09/299,483 filed Apr. 26, 1999, now U.S. Pat. No. 6,144,310; which is a utility application claiming the benefit of the earlier filing date of Provisional Ser. No. 60/117,307 filed Jan. 26, 1999.

BACKGROUND FOR THE INVENTION

1. Field of Invention

The present invention relates to environmental condition detection for dwellings including smoke detection, carbon monoxide gas detection, natural gas detection, propane gas detection, combination smoke and carbon monoxide gas detection, etc. such that the audible tonal pattern alarm emitted by a detector sensing an abnormal environmental condition is accompanied by a pre-recorded voice message that clearly indicates the specific type of condition sensed or the specific location of the detector sensing the condition, or both.

2. Background

With the widespread use of environmental condition detectors such as smoke detectors, carbon monoxide detectors, natural gas detectors, propane detectors, etc. in residences and businesses today, there is a critical need to provide definite distinction between the tonal pattern alarms emitted by each type of detector so that the occupants of the involved dwelling are immediately made aware of the specific type of condition detected along with its location so they can take the proper immediate action. Regulating and governing bodies for products of the home safety industry (National Fire Protection Association, Underwriters Laboratories, etc.) have recently regulated the tonal patterns emitted from such environmental detectors, however, much confusion still exists among the very similar tonal pattern alarms emitted by various detector types. This is particularly true for those individuals partially overcome by the environmental condition, those asleep when the alarm occurs, young children, or the elderly. Therefore, a need exists whereby the environmental detector sensing an abnormal condition plays a recorded voice message stating the specific condition and/or location of the condition in addition to the required tonal pattern alarm. In conventional smoke detectors and carbon monoxide detectors, there are silent periods within the prescribed audible tonal pattern alarms where recorded verbal messages such as "smoke" or "CO" or "carbon monoxide" or "smoke in basement" or "utility room" (as examples) may be played during this alarm silence period to clearly discriminate between the types of audible alarms and environmental conditions and where the environmental condition was detected. Such messages immediately provide the occupants in an involved dwelling important safety information during potentially hazardous environmental conditions. The occupants can make informed decisions about how to respond to the alarm condition. Occupants residing in the uninvolved area of the dwelling may choose to assist those residing in the involved area depending on the location and type of condition detected. The type of environmental condition sensed or the location of the condition, or both are immediately made clear through the use of recorded voice messages in addition to conventional tonal pattern alarms.

3. Discussion of Prior Art

While there are inventions in the prior art pertaining to emergency alarm systems utilizing verbal instructions, none are known to the inventor which use a combination of tonal pattern alarms and factory pre-recorded voice messages with function or intent to clearly and specifically identify and clarify which type of environmental condition is present in a dwelling. Nor are there known inventions that use such pre-recorded voice messages to specifically identify the location of the environmental condition sensed by environmental condition detectors in dwellings without the use of a central control unit.

Morris (U.S. Pat. No. 5,587,705) describes a wireless smoke detector system using a minimum of two smoke detectors to indicate the location of the smoke detector sensing the smoke through coded alarm patterns. The present invention does not use wireless communication between detectors; each detector may operate without any others or may operate as a hardwired system with interconnected units for those powered by 120 VAC. Fray (U.S. Pat. No. 5,663,714) describes a warning system for giving user-recorded verbal instructions during a fire. Fray teaches an object of his invention is to warn individuals of the presence of smoke and fire and to provide verbal instructions and guidance as how to escape the hazard. Routman et al (U.S. Pat. No. 5,349,338) describe a fire detector and alarm system that uses personally familiar user-recorded verbal messages specifically for a small child or adult in need of verbal instructions during the presence of a fire. Chiang (U.S. Pat. No. 5,291,183) describes a multi-functional alarming system using a microphone to sense ambient conditions and user-recorded verbal instructions for indicating the way to escape a fire. Kim (U.S. Pat. No. 4,816,809) describes a speaking fire alarm system that uses a central control system with remote temperature sensors. Haglund et al (U.S. Pat. No. 4,282,519) describe a hardwired smoke detector system whereby two audible alarm codes are indicated to determine whether the smoke was detected locally or not. Only two possible alarm patterns are used and no voice message is used with Haglund's hardwired system. Molinick and Sheilds (U.S. Pat. No. 4,288,789) describe an oral warning system for monitoring mining operations that uses a plurality of non-emergency condition sensors and second sensors for detecting emergencies. The patent further describes the use of a single and system-central multiple-track magnetic tape player for storing the verbal messages and links the alarm system to control the operation of mechanical devices (mining conveyor belts, etc.) during emergency conditions when verbal messages are played.

Additionally, Morris (U.S. Pat. No. 5,587,705), Fray (U.S. Pat. No. 5,663,714), Routman et al (U.S. Pat. No. 5,349,338), Chaing (U.S. Pat. No. 5,291,183), Kim (U.S. Pat. No. 4,816,809), and Haglund et al (U.S. Pat. No. 4,282,519) do not recite the specific use of factory pre-recorded voice messages to indicate the specific location of the environmental condition, or the use of voice messages to identify the specific type of environmental condition detected, or the use of a plurality of interconnected detectors emitting identical verbal messages. or a selectable means to define the installation location of the detector, all of which are taught in the present invention and afford significant safety advantages. While Molinick and Shields (U.S. Pat. No. 4,288,789) refer to verbally describing an emergency condition in mining operations, their patent teaches of a much more complex system than the present invention and describes a

central control system with multiple stages of various configuration sensors and the use of user-recorded voice messages. Furthermore, the patent does not describe a selectable coding means to define the installation location of the sensors.

All known prior art providing user-recorded verbal instructions on how to escape a hazardous condition has become impractical for use in dwellings in view of the recent National Fire Protection Association (NFPA) and Underwriters Laboratories (UL) regulations that require a maximum silence period between tonal alarm patterns of 1.5 seconds (Ref UL2034, UL217, NFPA72 and NFPA720). This period of time is sufficient for the present invention to verbally indicate the type and location of the sensed environmental condition but is unlikely to be useful to provide detailed instructions, as taught in the prior art, to occupants on how to respond to a hazardous condition.

The present invention employs either single station environmental condition detectors or a system comprising direct hardwired communication links between a plurality of environmental condition detectors to provide a tonal pattern alarm with pre-recorded voice message information regarding the specific type of environmental condition detected or the specific location of the detector sensing the environmental condition, or both, all without the need of a centralized control unit. For detector embodiments using pre-recorded voice messages to indicate the location of the detected condition, each detector is set-up by the user during installation to define the physical location of the detector within the dwelling according to pre-defined location definitions pre-programmed into the electronic storage media. The recorded voice messages are pre-recorded into the electronic storage media during manufacture and are not normally changeable by the user. In view of the recent National Fire Protection Association and Underwriters Laboratories regulations for tonal pattern alarms, it is not practical to have the user record their own sounds during the silent periods of the tonal pattern. The user may choose to record other alarm sounds that would violate the regulations governing such tonal patterns and compromise the safety features of the device. The use of factory pre-recorded voice messages alleviates this problem.

It is emphasized that no other related prior art known to the inventor makes use of factory pre-recorded voice messages to indicate the location of the environmental condition or the type of condition or both. Sufficient addressable electronic memory is available in the preferred embodiment of the invention to afford numerous pre-recorded voice messages.

SUMMARY OF THE INVENTION

Described herein is the Environmental Condition Detector with Audible Alarm and Voice Identifier invention, which comprises an environmental condition detector, such as a smoke detector, carbon monoxide gas detector, natural gas detector, propane detector, or any combination detector thereof, which detects the desired environmental condition(s) by those methods well known and described in the art and emits the prescribed audible tonal pattern alarm in accordance with the industry's empowered governing bodies' (National Fire Protection Association, Underwriters Laboratories etc.) criteria for such environmental conditions. Simultaneously, the environmental condition detector sensing the condition emits a verbal message to indicate, through a recorded voice message or synthesized human voice, the condition being sensed. This recorded voice message is emitted simultaneously with the audible tonal pattern alarm so as normally to occur during silent segments of the prescribed tonal pattern alarm. For example, for the condition of smoke detection, the smoke detector emits the following combination audible tonal pattern alarm (Beep) and recorded voice message. "Beep - - - Beep - - - Beep - - - 'SMOKE' - - - Beep - - - Beep - - - Beep - - - 'SMOKE' - - - " in a periodic manner for as long as the environmental condition is detected. As a second example, for carbon monoxide detection, a carbon monoxide detector emits "Beep - - - Beep - - - Beep - - - Beep - - - 'CO' - - - Beep - - - Beep - - - Beep - - - Beep - - - 'CO' - - - ". As a third example, for smoke detection with the location identifier, a smoke detector emits "Beep - - - Beep - - - Beep - - - "SMOKE IN BASEMENT' - - - Beep - - - Beep - - - Beep - - - 'SMOKE IN BASEMENT' - - - ". As a fourth example, for carbon monoxide detection with a voice location only identifier, a carbon monoxide detector emits ""Beep - - - Beep - - - Beep - - - Beep - - - 'Utility Room' - - - Beep - - - Beep - - - Beep - - - Beep - - - 'Utility Room' - - - ".

OBJECTS AND ADVANTAGES OF THE PRESENT INVENTION

It is one object of the present invention to provide environmental condition detectors that function as single station (non-interconnected) detector units equipped to emit a tonal pattern alarm and a recorded voice message. The recorded voice message clearly identifies the location of the environmental condition detector sensing the condition, or describes the type of environmental condition that has been detected, or both, as illustrated in the above, non-exhaustive examples. The single station detector embodiment is battery powered or 120 VAC powered. User-selectable coding switches or jumpers permit the user to define the physical location of the single station unit within the dwelling. No other related prior art is known to the inventor that uses factory pre-recorded voice messages in combination with conventional tonal pattern alarms to indicate the specific type or specific location, or both, of an abnormal environmental condition as related to single station units.

It is another object of the present invention to provide an environmental condition detection system where one detector sensing an environmental condition causes all other interconnected detectors to emit identical tonal pattern alarms and recorded voice messages. The hardwired directly interconnected detectors forming the environmental condition detection system are 120 VAC powered with optional battery back-up and use the recorded voice message to identify the location of the environmental condition detector sensing the condition, or to describe the type of environmental condition that has been detected, or both, as illustrated in the above, non-exhaustive examples. The environmental condition detection system embodiments of the present invention do not require the use of a centralized control unit (control panel) between detectors. No other related prior art is known to the inventor that uses factory pre-recorded voice messages in combination with conventional tonal pattern alarms to indicate the specific type or specific location, or both of an abnormal environmental condition as related to a directly interconnected environmental condition detector system having no central control unit or panel.

A major advantage of both the single station embodiment and the system embodiment of the present invention is the use of factory pre-recorded voice messages that fit within the National Fire Protection Association and Underwriters

Laboratories specified 1.5 second silence period of the standard smoke detector and carbon monoxide detector tonal pattern alarms. Prior art using user-recorded voice messages are intended to indicate directions on how to escape the hazard or how to respond to a hazard. Such messages would not practically fit into the maximum 1.5 second silent time period in conventional tonal alarm patterns for smoke detectors and carbon monoxide detectors used in dwellings. The allowance for a user to record his or her own messages may actually add to the confusion and danger that results during an alarm condition if the user chooses to record additional alarm sounds or errs in the directions given in the message on how to properly respond to a hazardous condition.

BRIEF DESCRIPTION OF THE DRAWINGS

FIG. **1** is a sketch of a preferred embodiment of the Environmental Condition Detector with Alarm and Voice Identifier according to the invention.

FIG. **2** is a sketch of a preferred embodiment of the electronic circuitry for the interconnected system embodiment of the Environmental Condition Detector with Alarm and Voice Identifier according to the invention.

FIG. **3** is a sketch of a second preferred embodiment of the electronic circuitry for the interconnected system embodiment of the Environmental Condition Detector with Alarm and Voice Identifier according to the invention.

FIG. **4** shows an example audible tonal pattern alarm and recorded voice message combination used for the Environmental Condition Detector with Alarm and Voice Identifier configured as a smoke detector and using a recorded voice message as an environmental condition type identifier according to the invention.

FIG. **5** shows an example audible tonal pattern alarm and recorded voice message combination used for the Environmental Condition Detector with Alarm and Voice Identifier configured as a smoke detector using a recorded voice message as an environmental condition location identifier according to the invention.

FIG. **6** shows an example audible tonal pattern alarm and recorded voice message combination used for the Environmental Condition Detector with Alarm and Voice identifier configured as a carbon monoxide detector and using a recorded voice message as an environmental condition type identifier and location identifier according to the invention.

FIG. **7** shows one method for the user to select the installation location coding of the Environmental Condition Detector with Alarm and Voice Identifier according to the invention.

DETAILED DESCRIPTION OF THE INVENTION

A preferred embodiment of the Environmental Condition Detector with Alarm and Voice Identifier **6** is shown in FIG. **1**. The unit is powered by a battery **40** and/or by standard 120 VAC (not shown). The environmental condition sensor and alarm unit **10** (conventional smoke detector, carbon monoxide detector, combination smoke detector and carbon monoxide detector, natural gas detector, propane detector, abnormal temperature etc.) is any sensor type(s) utilizing environmental detection methods and alarm devices typically known in the art of smoke detectors, carbon monoxide detectors and other hazard detectors. Upon sensing the environmental condition, the environmental condition sensor and alarm unit **10** sounds its tonal pattern alarm to indicate that an environmental condition has been sensed in the immediate area. The alarm pattern is a prescribed audible tonal pattern alarm corresponding to the environmental condition as set forth by the empowered governing body (National Fire Protection Association, Underwriters Laboratories etc.). The interface and control unit **20** electronically interfaces with the environmental condition sensor and alarm unit **10** and controls the timing of a recorded voice message that is emitted simultaneously with the audible tonal pattern alarm such that the recorded voice message is emitted only during the period when the audible tonal pattern alarm cycles through a silent period. In one embodiment, an electronic signal frequency counter (not shown) is used to determine when the silent period of the audible alarm is occurring. The recorded voice message or synthesized human voice message is factory-recorded on an electronic storage media **30** such as, but not limited to, a ROM device. The recorded voice message is emitted through a speaker or other audio transducer **70**. For the embodiments of the invention requiring identification of the location of the environmental condition detector sensing the environmental condition, a selectable coding apparatus **50** (jumper selector or DIP switch) which connects to the interface and control unit **20** is provided to select one of several predefined physical locations of the environmental condition detectors within a residence. Recorded voice messages to identify physical locations consistent with the position of the selectable coding apparatus **50** are stored on the electronic storage media **30**. The selectable coding apparatus **50** is set to correspond to the location within the dwelling where the particular environmental condition detector **6** is installed. A language code selector jumper set or DIP switch) **60** is used to choose the language type (English, Spanish. etc.) used by the recorded voice. For interconnected 120 VAC units, when one environmental condition detector sounds its tonal pattern alarm and recorded voice message, all interconnected units will sound identical tonal pattern alarms and recorded voice messages in temporal phase. For the environmental condition detection system embodiment, an interconnecting conductor set **80** sends and receives a coded electrical signal encoded and decoded by the interface and control unit **20** by the sending and receiving detector, respectively. The coding of the signal sent over the interconnecting conductor set determines what specific recorded voice message is played from the electronic storage media **30** at the interconnected but remotely located environmental condition detectors. Another embodiment of the invention shown in FIG. **3** uses several interconnection conductors which alleviates the need for electrical encoding and decoding of the signal sent and received over the interconnecting conductor set **80**.

Shown in FIG. **2** is a sketch of a preferred embodiment of the electronic circuitry for one detector unit of the interconnected system embodiment of the Environmental Condition Detector with Alarm and Voice Identifier. The environmental condition sensor and alarm unit **10** connects to the interface and control unit **20** to trigger the monostable multivibrator **21** for a predetermined period of time when an environmental condition is detected. The monostable multivibrator **21** enables the signal encoder **22** to send a coded electrical signal to the local signal decoder **23** and to all other signal decoders of interconnected detectors hardwired linked together through the conductor set **80** shown in FIG. **1**. Upon receiving a local or remote encoded signal, the signal decoder **23** decodes the signal and validates or rejects the signal. Upon validation of a received signal, within each interconnected detector, the signal decoder **23** enables and addresses the electronic voice memory integrated circuit **31** to emit a recorded voice message verbally describing the

location or type, or both of the environmental condition sensed. All recorded voice messages emitted by the interconnected detector units connected through the conductor set **80** via electrical conductor connector **37** are in temporal phase. A selectable coding apparatus of switches or jumpers **51** defines the physical installation location of each environmental condition detector through pre-defined location designations illustrated in FIG. **7**. A language selector switch apparatus **60** is used to select which language is used during the playing of the recorded voice messages. The recorded voice message is played through a speaker **70**.

Shown in FIG. **3** is a sketch of a second preferred embodiment of the electronic circuitry for one detector unit for the interconnected system embodiment of the Environmental Condition Detector with Alarm and Voice Identifier. The environmental condition sensor and alarm unit **10** connects to the interface and control unit **20** to trigger the monostable multivibrator **21** for a predetermined period of time when an environmental condition is detected. The monostable multivibrator **21** enables the electronic voice memory integrated circuit **31** to emit a recorded voice message verbally describing the location or type, or both, of the environmental condition sensed. All detector units within the interconnected system share common electrical connection to the address bits on each detector unit's electronic voice memory integrated circuit **31** through a multiple conductor connector interface **35** which results in all detector units emitting identical recorded voice messages in temporal phase. A selectable coding apparatus of switches or jumpers **52** defines the physical installation location of each environmental condition detector through pre-defined location designations illustrated in FIG. **7**. A language selector switch apparatus **60** is used to select which language is used during the playing of the recorded voice messages. The recorded voice message is played through a speaker **70**.

Shown in FIG. **4** is an example alarm timing plot of the sound emitted **82** by an environmental condition detector using both an audible tonal pattern alarm **85** and a recorded voice message **90** to convey information about the specific environmental condition detected. In the example exhibited in FIG. **2**, the environmental condition detector embodiment is a smoke detector using voice as an environmental condition type identifier only. The recorded voice message **90** is inserted into the defined silence periods of the prescribed audible tonal pattern alarm **85** consistent with conventional smoke detector alarms.

Shown in FIG. **5** is an example alarm timing plot of the sound emitted **92** by an environmental condition detector using an audible tonal pattern alarm **95** to convey the specific type of environmental condition and a recorded voice message **100** to convey the location of the detected environmental condition. In the example exhibited in FIG. **5**, the environmental condition detector embodiment is a smoke detector using voice as an environmental condition location identifier only. The recorded voice message **100** is inserted into the defined silence periods of the prescribed audible tonal pattern alarm **95** consistent with conventional smoke detector alarms.

Shown in FIG. **6** is an example alarm timing plot of sound emitted **102** by an environmental condition detector using an audible tonal pattern alarm **105** and a recorded voice message **110** to convey the specific type of environmental condition detected and the location of the environmental condition detector sensing the environmental condition. In the example exhibited in FIG. **6**, the environmental condition detector embodiment is a carbon monoxide detector using voice as both an environmental condition type identifier and location identifier. The recorded voice message **110** is inserted into the defined silence periods of the prescribed audible tonal pattern alarm **105** consistent with conventional carbon monoxide alarms. The example tonal pattern alarms and recorded voice messages are illustrative and not intended to provide an exhaustive exhibit of all possible tonal alarm patterns and recorded voice messages.

Shown in FIG. **7** is a selectable coding apparatus **115** for the user to select one of the pre-defined locations of the Environmental Condition Detector with Alarm and Voice Identifier embodiment when and where it is installed in a dwelling. Selectable coding means such as a jumper **117** on DIP header pins **120** or DIP switches (not shown) are simple methods to define the installation location of a detector embodiment. Typical dwelling locations are shown in FIG. **7** and are not intended to exhibit an exhaustive list.

The various preferred embodiments described above are merely descriptive of the present invention and are in no way intended to limit the scope of the invention. Modifications of the present invention will become obvious to those skilled in the art in light of the detailed description above, and such modifications are intended to fall within the scope of the appended claims.

I claim:

1. An ambient condition detector comprising: first and second, ambient condition sensors; control electronics coupled to the sensors wherein the electronics emits at least two, different, unalterable pre-established alarm indicating tonal, output patterns wherein each pattern includes predetermined silent intervals and each is associated with a respective one of the sensors; voice output circuitry, coupled to the electronics, wherein the voice circuitry can output at least two different user unalterable, verbal alarm output messages wherein each of the messages is associated with a respective one of the tonal output patterns and verbalizes the respective alarm type and wherein the control electronics, in response to a detected alarm condition, outputs an audio representation of a respective one of the tonal patterns and an interleaved respective verbal alarm type message in a respective silent interval; wherein each tonal output pattern defines groups of substantially identical output tones with constant intragroup spacing of a first amount and constant intergroup spacing of a second amount wherein the second amount is at least two times greater than the first amount; and a common housing for the sensors, the electronics and the output circuitry.

2. A detector as in claim **1** wherein one of the sensors is a smoke sensor and the respective, verbal message is a fire alarm to reinforce the respective tonal output pattern indicative of a fire alarm.

3. A detector as in claim **2** wherein the other sensor is a carbon monoxide sensor and the respective verbal message is a carbon monoxide alarm to reinforce the respective tonal output pattern, indicative of a carbon monoxide alarm.

4. A detector as in claim **3** wherein at least one tonal output pattern defines groups of three substantially identical output tones with constant intragroup spacing of a first amount and constant intergroup spacing of a second amount wherein another tonal output pattern defines groups of four substantially identical output tones with constant intragroup spacing of a third amount and constant intergroup spacing of a fourth amount.

5. A detector as in claim **4** wherein each tone of one tonal pattern has a duration on the order of 0.5 seconds.

6. A detector as in claim **1** wherein one tonal pattern has an intragroup spacing on the order of 0.5 seconds and an intergroup spacing on the order of 1.5 seconds.

7. A detector as in claim 1 which includes a plurality of predetermined location specifying messages.

8. A detector as in claim 7 which includes a manually operable element for selecting a location specifying message.

9. An ambient condition detector comprising: a fire sensor and a gas sensor; control electronics coupled to the sensors wherein the electronics emits at least first and second, different, unalterable alarm indicating tonal, output patterns wherein each pattern includes groups of spaced apart tones separated by longer intergroup silent intervals and wherein each output pattern is associated with a respective one of the sensors; voice output circuitry, coupled to the electronics, wherein the voice circuitry includes at least two pre-established, user unalterable, verbal alarm output messages wherein each of the messages is associated with a respective one of the tonal output patterns and verbalizes the respective alarm type and wherein the control electronics, in response to a detected alarm condition, outputs an audio representation of a respective one of the tonal patterns and an interleaved respective verbal alarm type message in a respective intergroup silent interval; wherein the first tonal output pattern, associated with the fire sensor, comprises a selected number of tones in each group with intragroup tonal spacing less than 50% of the respective intergroup silent interval and wherein the second tonal output pattern, associated with the gas sensor, comprises a greater number of tones in each group than the selected number of tones; and a common housing for the sensors, the electronics and the output circuitry.

* * * * *

UNITED STATES PATENT AND TRADEMARK OFFICE

CERTIFICATE OF CORRECTION

PATENT NO. : 7,158,040 B2
APPLICATION NO. : 10/915672
DATED : January 2, 2007
INVENTOR(S) : Gary J. Morris

It is certified that error appears in the above-identified patent and that said Letters Patent is hereby corrected as shown below:

On the Title page Item (73), "Assignee: Sunbeam Products, Inc., Boca Raton, FL (US)" should be deleted.

Signed and Sealed this

Twenty-ninth Day of July, 2008

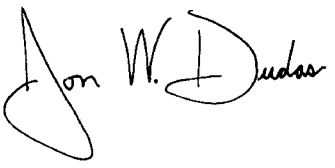

JON W. DUDAS
Director of the United States Patent and Trademark Office

US006323780B1

(12) **United States Patent**
Morris

(10) **Patent No.: US 6,323,780 B1**
(45) **Date of Patent: *Nov. 27, 2001**

(54) **COMMUNICATIVE ENVIRONMENTAL ALARM SYSTEM WITH VOICE INDICATION**

(76) Inventor: **Gary J. Morris**, 2026 Glenmark Ave., Morgantown, WV (US) 26505

(*) Notice: This patent issued on a continued prosecution application filed under 37 CFR 1.53(d), and is subject to the twenty year patent term provisions of 35 U.S.C. 154(a)(2).

Subject to any disclaimer, the term of this patent is extended or adjusted under 35 U.S.C. 154(b) by 0 days.

This patent is subject to a terminal disclaimer.

(21) Appl. No.: **09/417,154**

(22) Filed: **Oct. 12, 1999**

Related U.S. Application Data

(63) Continuation-in-part of application No. 09/299,483, filed on Apr. 26, 1999, now Pat. No. 6,144,310.
(60) Provisional application No. 60/104,217, filed on Oct. 14, 1998.

(51) **Int. Cl.**[7] **G08B 25/08**
(52) **U.S. Cl.** **340/692**; 340/539; 340/577; 340/505; 340/506; 340/628; 340/632; 340/693.11
(58) **Field of Search** 340/692, 539, 340/628, 632, 577, 693.11, 505, 506, 500, 517, 520–524, 531–534, 540, 584, 605, 691.1, 691.4, 693.5, 693.6, 693.7, 693.9, 286.01, 286.05, 286.11, 328, 329, 384.1, 384.3, 384.4, 384.73

(56) **References Cited**

U.S. PATENT DOCUMENTS

3,906,491		9/1975	Gosswiller et al. .	
4,101,872	*	7/1978	Pappas	340/539
4,141,007	*	2/1979	Kavasilios et al.	340/539
4,160,246		7/1979	Martin et al. .	

(List continued on next page.)

FOREIGN PATENT DOCUMENTS

90/01759 2/1990 (WO) .

OTHER PUBLICATIONS

NFPA 72 National Fire Alarm Code 1996 Edition, 72–1 to 72–106 (partial copy); NFPA 720, Recommended Practice for the Installation of Household Carbon Monoxide (CO) Warning Equipment 1998 Edition.

UL 217 ISBN 0–7629–0062–8, Single and Multiple Station Smoke Alarms, Mar. 16, 1998–Feb. 21, 1997; UL 2034 ISBN 0–7629–274–9, Single and Multiple Station Carbon Monoxide Alarms, Dec. 21, 1998–Oct. 29, 1996.

Primary Examiner—Nina Tong
(74) *Attorney, Agent, or Firm*—Rockey, Milanow & Katz, Ltd.

(57) **ABSTRACT**

The battery powered or 120 VAC powered environmental condition detector of the present invention is designed to provide an early warning of the presence of an environmental condition (smoke or carbon monoxide gas or natural gas or propane gas or any multiple combination of these offending agents) to persons in remote areas of a building. The detector sensing the environmental condition emits an audible tonal pattern alarm, while transmitting a radio signal directly to other environmental condition detectors to activate their alarms and to activate an electronically stored human voice recording (or synthesized voice) that indicates the location of the environmental condition detector sensing the environmental condition, or the type of environmental condition, or both. Rechargeable light modules separate from the detector are included that receive the signal from the detector sensing the environmental condition and illuminate areas and paths of egress for the duration of the alarm condition or in case of 120 VAC power failure. All components of the system are easy to install due to the modular design and conventional power sources. An intermittent activation of the electronic circuitry in the detector unit may be used to conserve battery energy in the battery powered embodiment.

59 Claims, 7 Drawing Sheets

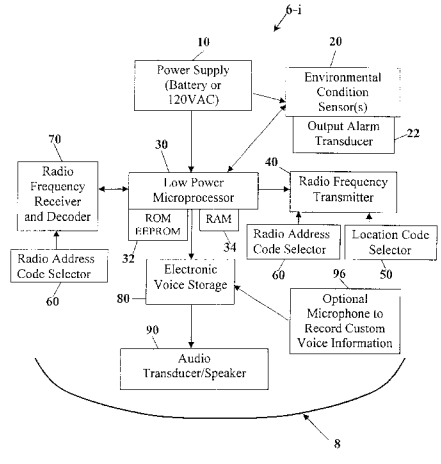

U.S. PATENT DOCUMENTS

4,275,274		6/1981	English .	
4,282,519		8/1981	Haglund et al. .	
4,288,789		9/1981	Molinick et al. .	
4,335,379		6/1982	Martin .	
4,343,990		8/1982	Ueda .	
4,350,860		9/1982	Ueda .	
4,351,999		9/1982	Nagamoto et al. .	
4,363,031	*	12/1982	Reinowitz	340/539
4,365,315		12/1982	Jamnik .	
4,366,873		1/1983	Levy et al. .	
4,375,329		3/1983	Park .	
4,389,639		6/1983	Torii et al. .	
4,400,786		8/1983	Mandei et al. .	
4,453,222		6/1984	Goszyk .	
4,455,551		6/1984	Lemelson .	
4,481,507		11/1984	Takiguchi et al. .	
4,498,078		2/1985	Yoshimura et al. .	
4,500,971		2/1985	Futaki et al. .	
4,519,027		5/1985	Vogelsberg .	
4,531,114	*	7/1985	Topol et al.	340/539
4,560,978		12/1985	Lemelson .	
4,572,652		2/1986	Tada et al. .	
4,682,348		7/1987	Dawson et al. .	
4,688,021	*	8/1987	Buck et al.	340/521
4,754,266		6/1988	Shand et al. .	
4,810,996		3/1989	Glen et al. .	
4,816,809		3/1989	Kim .	
4,821,027		4/1989	Mallory et al. .	
4,851,823		7/1989	Mori .	
4,862,147		8/1989	Thomas .	
4,894,642		1/1990	Ashbaugh et al. .	
4,940,965		7/1990	Umehara .	
4,988,980		1/1991	Graham .	
5,019,805	*	5/1991	Curl et al.	340/628
5,103,206	*	4/1992	Yu	340/506
5,117,217		5/1992	Nykerk .	
5,229,753		7/1993	Berg et al. .	
5,291,183		3/1994	Chiang .	
5,349,338		9/1994	Routman et al. .	
5,379,028		1/1995	Chung .	
5,460,228		10/1995	Butler .	
5,506,565	*	4/1996	De Leon et al.	340/522
5,587,705		12/1996	Morris .	
5,657,380		8/1997	Mozer .	
5,663,714		9/1997	Fray .	
5,673,023		9/1997	Smith .	
5,724,020		3/1998	Hsu .	
5,726,629		3/1998	Yu .	
5,764,134		6/1998	Carr et al. .	
5,786,749		7/1998	Johnson et al. .	
5,786,768		7/1998	Chan et al. .	
5,798,686		8/1998	Schreiner .	
5,841,347		11/1998	Kim .	
5,846,089		12/1998	Weiss et al. .	
5,856,781		1/1999	Michel et al. .	
5,864,288		1/1999	Hogan .	
5,874,893		2/1999	Ford .	
5,877,698		3/1999	Kusnier et al. .	
5,886,631		3/1999	Ralph .	
5,894,275		4/1999	Swingle .	
5,898,369	*	4/1999	Godwin	340/539
5,914,650		6/1999	Segan .	
5,936,515		8/1999	Right et al. .	
5,986,540		11/1999	Nakagaki et al. .	
6,114,967		9/2000	Yousif .	
6,144,310		11/2000	Morris .	
6,229,449		5/2001	Kirchner et al. .	

* cited by examiner

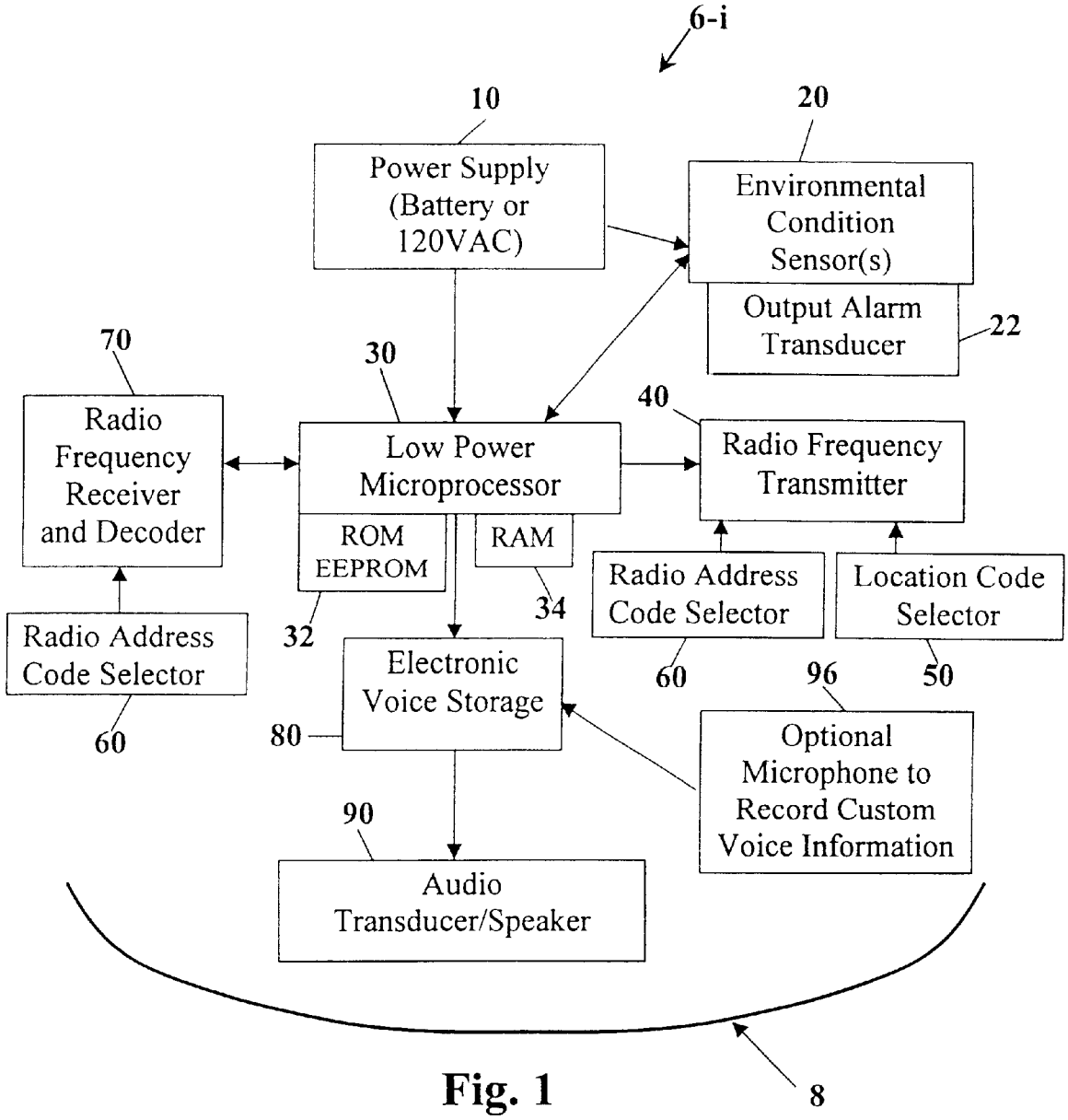
6-i
10
Power Supply (Battery or 120VAC)
20
Environmental Condition Sensor(s)
Output Alarm Transducer
22
70
Radio Frequency Receiver and Decoder
30
Low Power Microprocessor
ROM EEPROM
RAM
32
34
40
Radio Frequency Transmitter
Radio Address Code Selector
Location Code Selector
60
50
Radio Address Code Selector
60
Electronic Voice Storage
80
96
Optional Microphone to Record Custom Voice Information
90
Audio Transducer/Speaker
8

Fig. 1

Fig. 1A

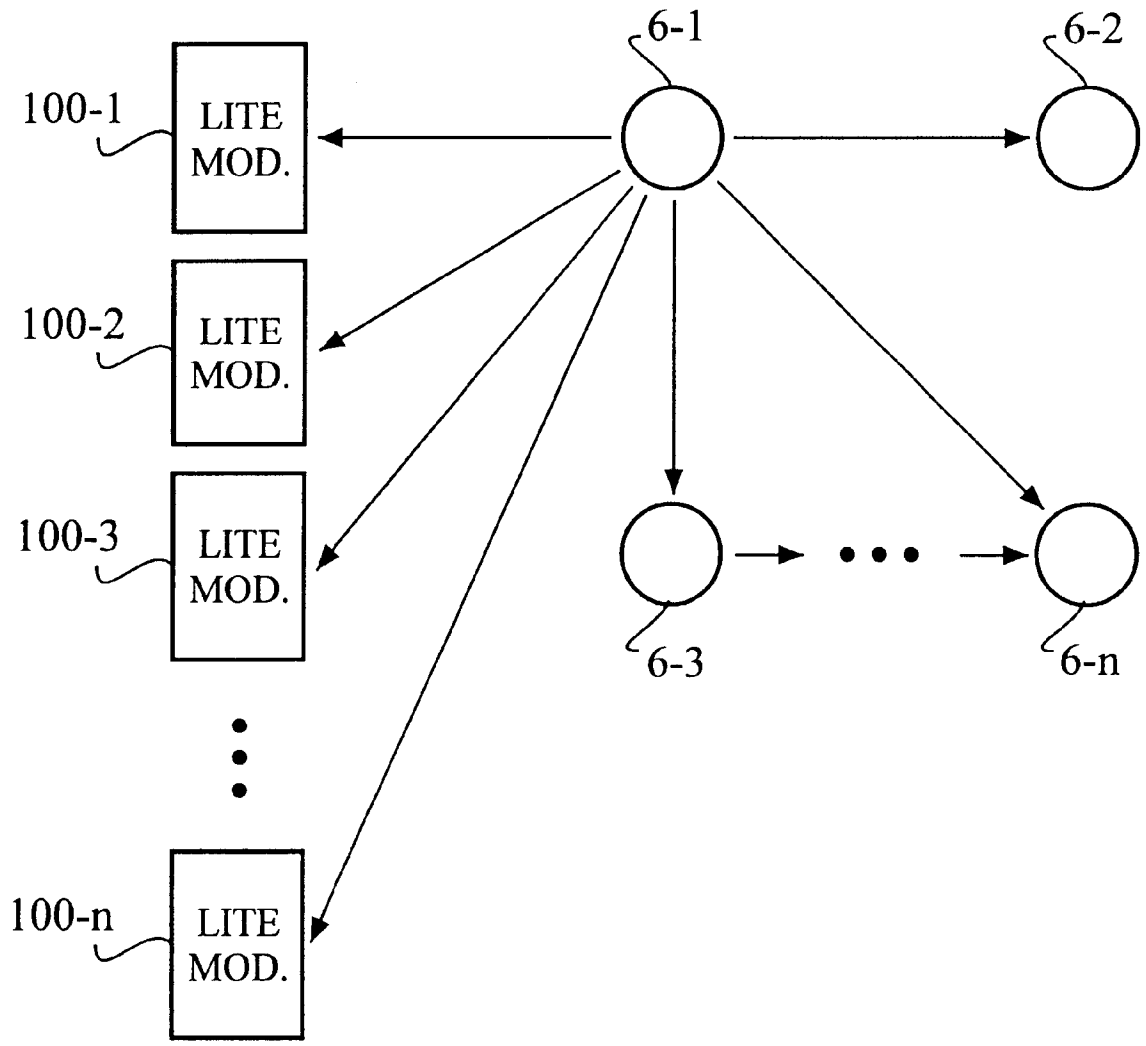
6-1
6-2
100-1
LITE MOD.
100-2
LITE MOD.
100-3
LITE MOD.
100-n
LITE MOD.
6-3
6-n

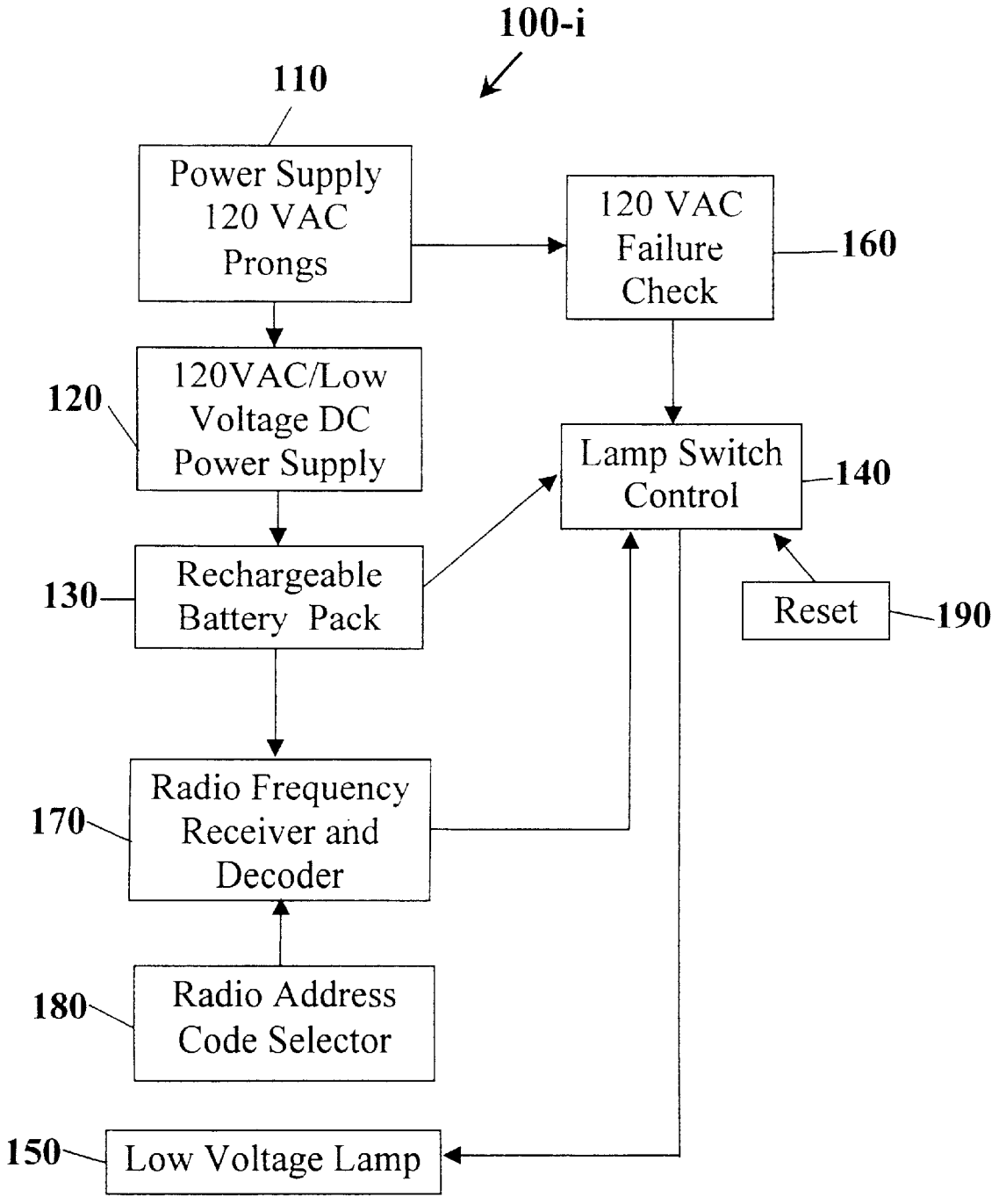
100-i
110
Power Supply 120 VAC Prongs
120 VAC Failure Check
160
120VAC/Low Voltage DC Power Supply
120
Lamp Switch Control
140
Rechargeable Battery Pack
130
Reset
190
Radio Frequency Receiver and Decoder
170
Radio Address Code Selector
180
Low Voltage Lamp
150

Fig. 2

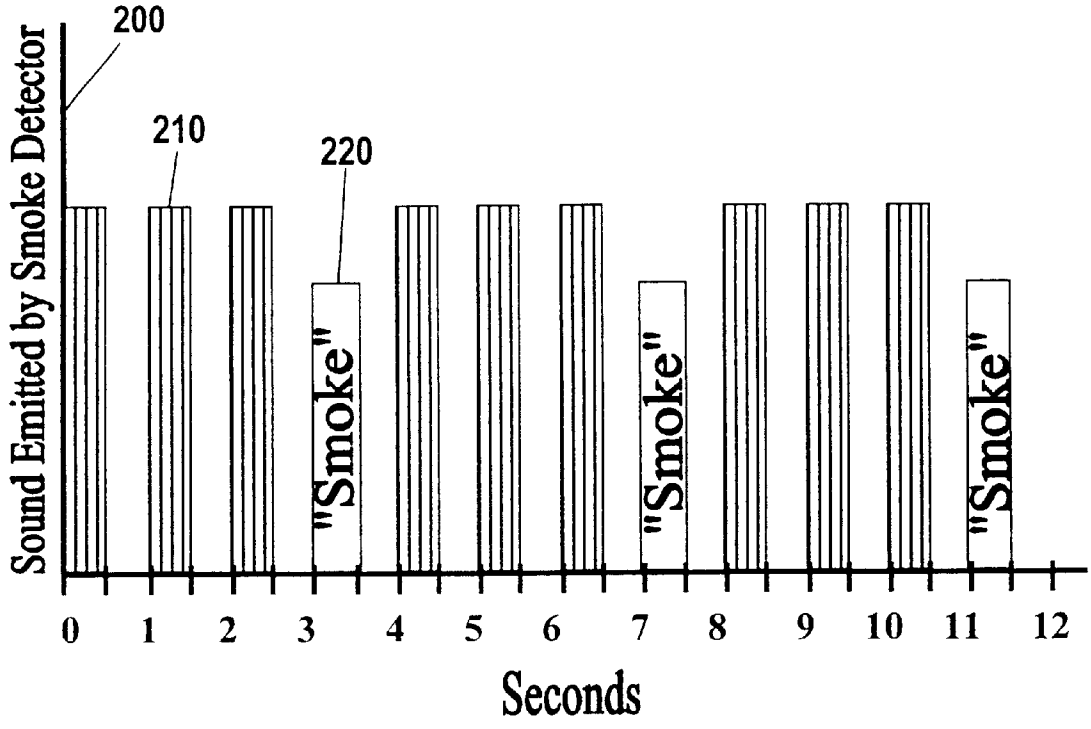
200
210
220
Sound Emitted by Smoke Detector
"Smoke"
"Smoke"
"Smoke"
0 1 2 3 4 5 6 7 8 9 10 11 12
Seconds

Fig. 3

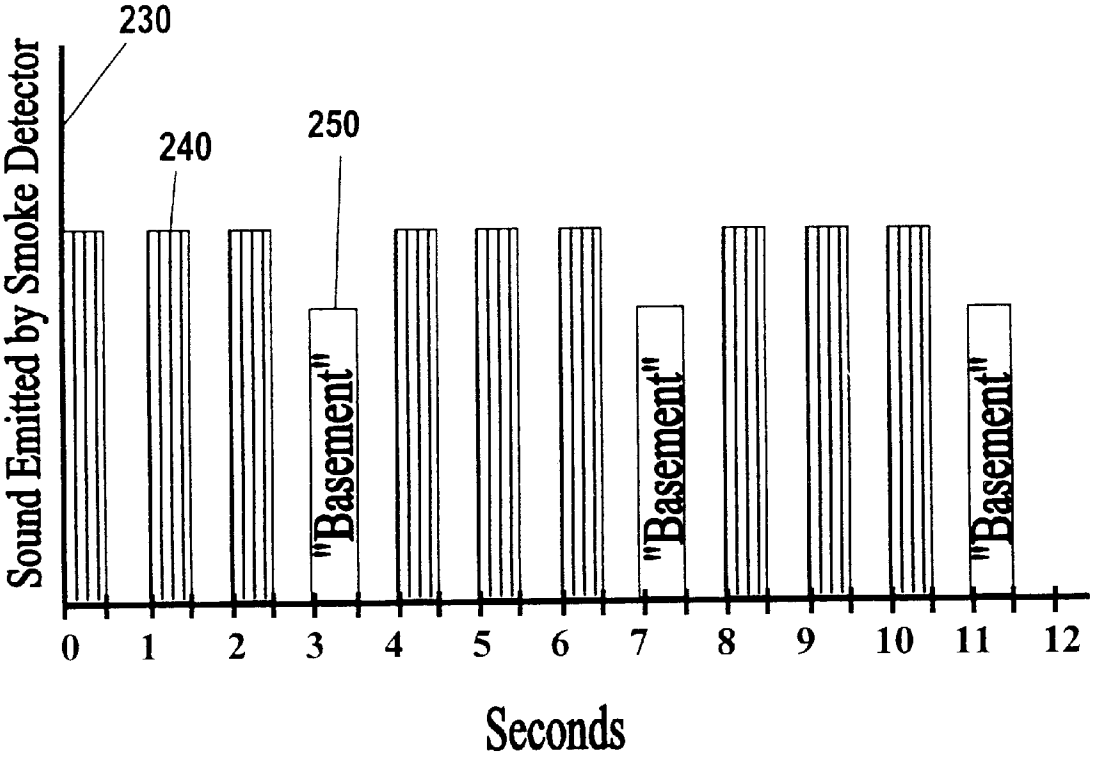
230
240
250
Sound Emitted by Smoke Detector
"Basement"
"Basement"
"Basement"
0 1 2 3 4 5 6 7 8 9 10 11 12
Seconds

Fig. 4

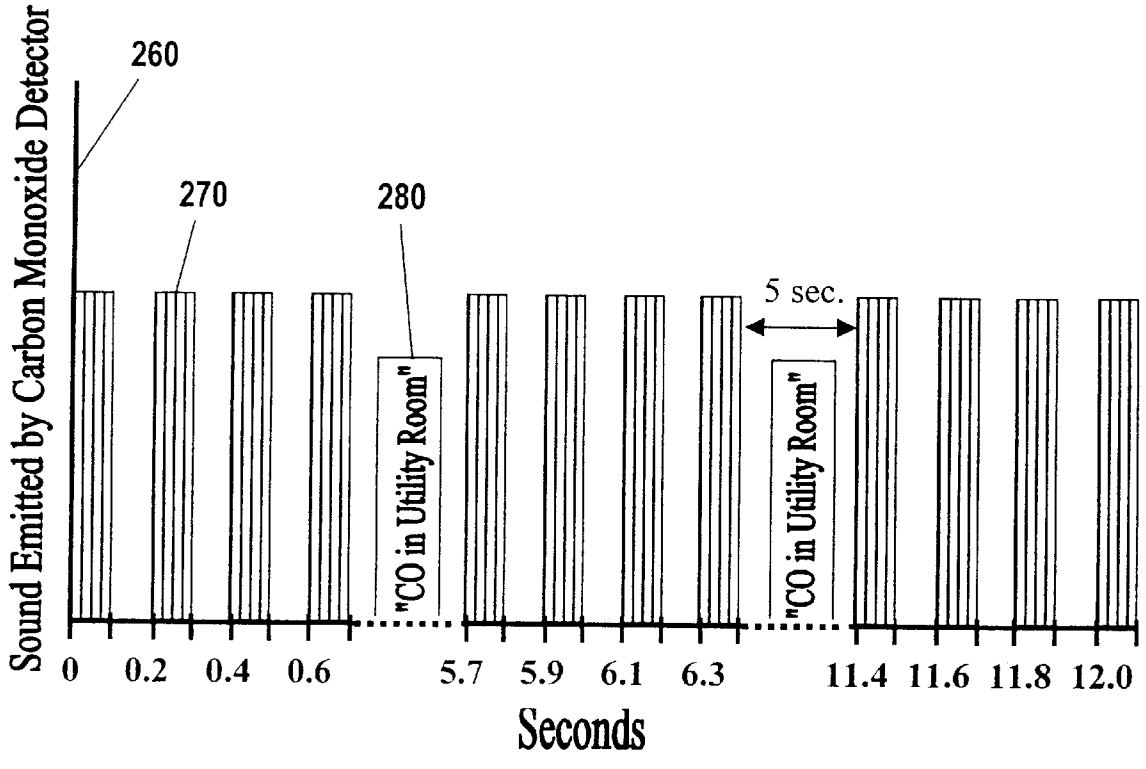
Sound Emitted by Carbon Monoxide Detector
260
270
280
5 sec.
"CO in Utility Room"
"CO in Utility Room"
0
0.2
0.4
0.6
5.7
5.9
6.1
6.3
11.4
11.6
11.8
12.0
Seconds

Fig. 5

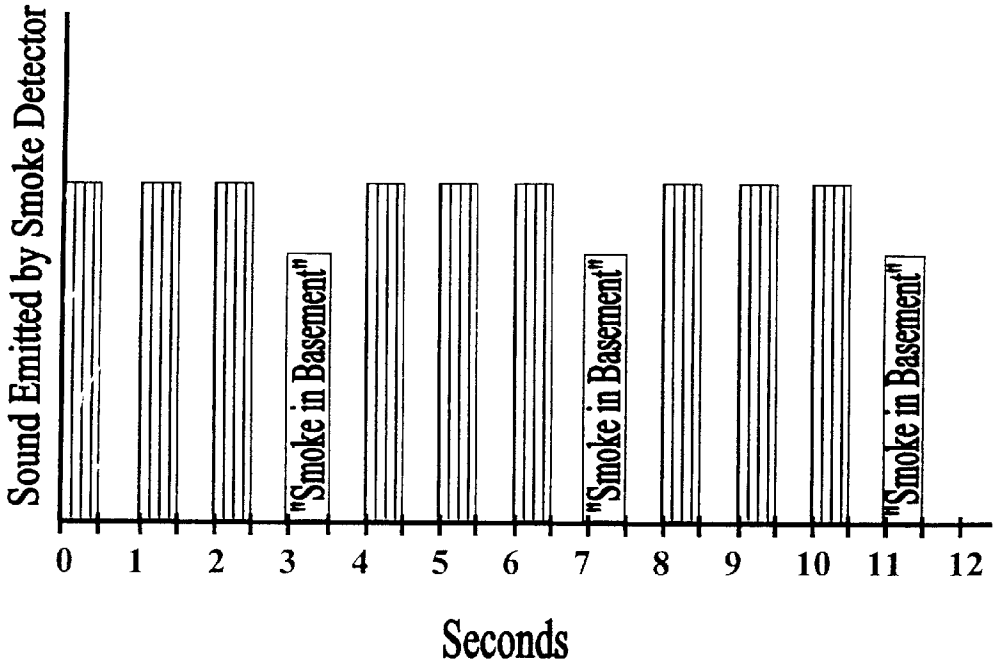
Sound Emitted by Smoke Detector
"Smoke in Basement"
"Smoke in Basement"
"Smoke in Basement"
0 1 2 3 4 5 6 7 8 9 10 11 12
Seconds

Fig. 6

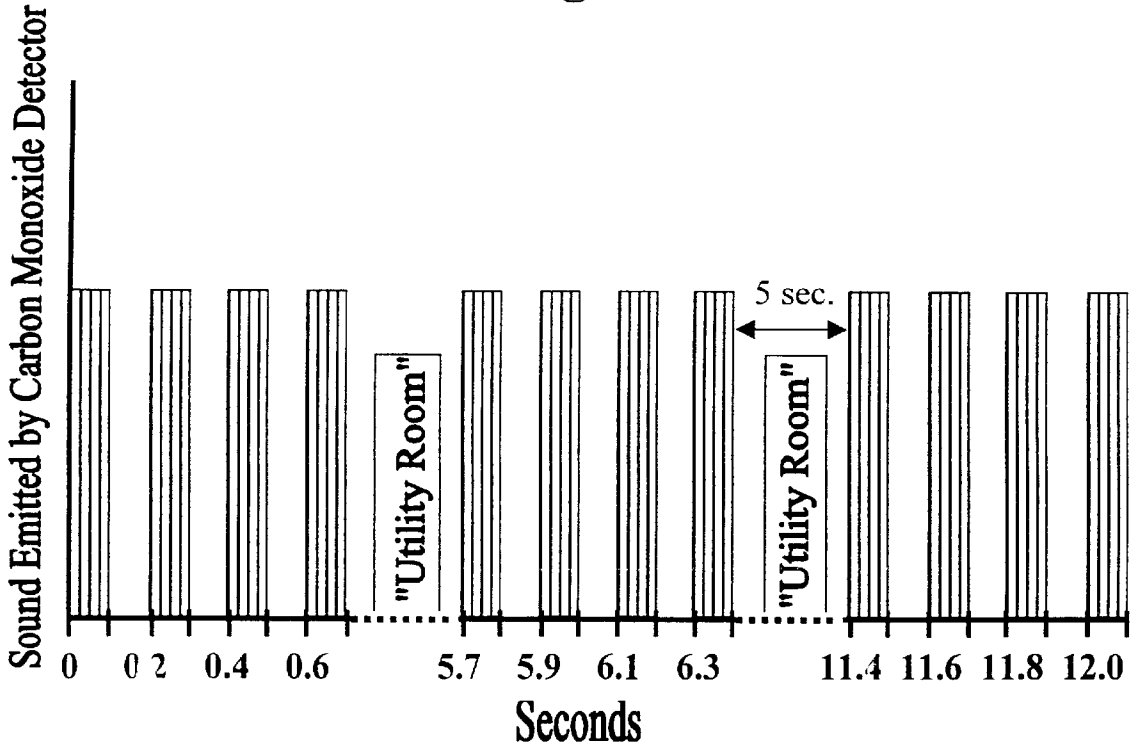
Sound Emitted by Carbon Monoxide Detector
5 sec.
"Utility Room"
"Utility Room"
0 0.2 0.4 0.6 5.7 5.9 6.1 6.3 11.4 11.6 11.8 12.0
Seconds

Fig. 7

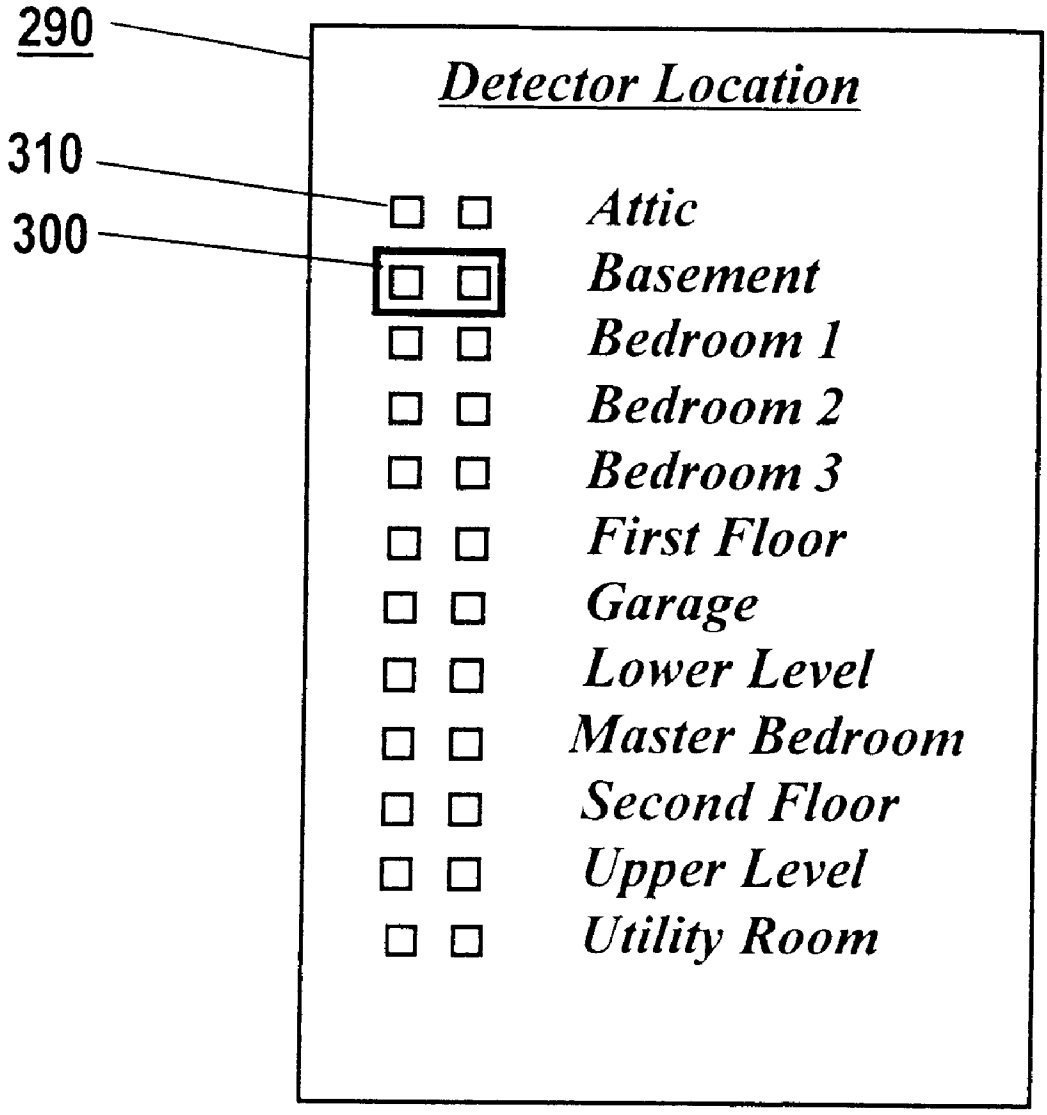
290
310
300
Detector Location
Attic
Basement
Bedroom 1
Bedroom 2
Bedroom 3
First Floor
Garage
Lower Level
Master Bedroom
Second Floor
Upper Level
Utility Room

Fig. 8

COMMUNICATIVE ENVIRONMENTAL ALARM SYSTEM WITH VOICE INDICATION

This application claims the benefit of Provisional Patent Application No. 60/104,217, including Disclosure Document 415668, filed Oct. 14, 1998. This application is a continuation-in-part of U.S. Patent application entitled Environmental Condition Detector With Audible Alarm And Voice Identifier, Ser. No. 09/299,483, filed Apr. 26, 1999 now issued as Pat. No. 6,144,310.

FIELD OF THE INVENTION

The invention pertains to ambient condition detectors. More particularly, the invention pertains to such detectors which incorporate verbal outputs.

BACKGROUND OF THE INVENTION

Harmful agents such as smoke, carbon monoxide gas, natural gas, or propane gas may unknowingly exist for significant periods of time in areas of dwellings before the occupants are warned through conventional environmental condition detector systems. Even with a plurality of conventional detectors, occupants in remote locations of an involved dwelling may not be able to hear the local alarm horn, know where the problem exists, or know what type of problem has been detected based on the audible tonal alarm pattern alone.

A need exists for environmental condition detection systems that can effectively provide an early warning to dwelling occupants in remote locations or levels away from the source of the environmental condition and can provide a means for lighted areas and paths of egress while doing so in a cost effective and simple manner. Such a system should be easy to install and operate to encourage usage.

Environmental condition detectors designed for remote sensing are commonly electrically hardwired to a central annunciator/controller panel to indicate the location of the environmental condition within a building. Unfortunately, only some businesses and few residences are currently equipped with hardwired detection systems with centralized smoke/fire annunciator panels.

Installing and retrofitting of remote environmental condition detection systems within buildings and residences without centralized annunciator panels is greatly facilitated with the environmental condition detector system described herein. Such detectors can incorporate wireless, for example radio frequency, intercommunication capabilities, to verbally indicate the location of the detector which sensed the environmental condition in a remote location. The type of environmental condition detected can be verbally indicated. Areas and paths of egress can be illuminated all without the need for a central control unit.

SUMMARY OF THE INVENTION

An environmental condition detection system signals occupants of a building or residence through the combined use of an audible tonal pattern alarm and voice when a selected environmental condition, such as an alarm condition, is detected in the area of any of the detectors. In one embodiment, remotely controlled light modules illuminate paths of egress or other desired areas during the selected environmental condition.

The detectors can be stand alone units for smoke detection, carbon monoxide detection, natural gas detection, or propane gas detection. Alternately, multiple sensors can be incorporated into a combination unit.

In another embodiment, two or more wirelessly coupled detectors form a system. Additional detectors or light modules may be employed as needed for desired coverage.

If a selected environmental condition is sensed by any one detector, it emits an audible tonal pattern alarm and also emits an electronically recorded verbal message indicating that the environmental condition is in close proximity to the detector. The verbal message can, for example, state the type of alarm, fire, gas and/or location. Simultaneously, that detector transmits a preset coded, wireless signal to all other such detectors within the region or building tuned to the same said wireless code. This results in the remotely located detector units emitting an audible tonal alarm pattern and an electronically recorded human voice (or synthesized voice) to indicate where, elsewhere in the region or building, the environmental condition has been detected to serve as an early and descriptive warning for the occupants.

The voice recording is selectively indicative of the location of the environmental condition sensed or the type of environmental condition sensed, or both. This voice recording can be selected by the user.

As an option, the user can record a message into the electronic memory using a microphone for specific dwellings. For example, a smoke detector located on the second floor of a dwelling receiving a radio frequency signal from a smoke detector located in the basement of the same dwelling would, in one embodiment emit the smoke detector tonal pattern alarm and intermittently emit the voice saying "Basement", or "Smoke in Basement", "Fire" or similar messages, during periods of silence within the tonal pattern alarm.

In one aspect of the invention, a system includes two or more autonomous environmental condition detectors which directly, and wirelessly communicate with other like environmental condition detectors through a radio frequency link (or other wireless link) between units without the need for a centralized control unit. This provides flexibility in location selection, reduced risk of total system failure in the absence of a single centralized control unit, and ease of installation of the system.

In yet another aspect of the invention, wireless communication can be provided to remote light modules to illuminate paths of egress or to illuminate any other room or area desired by the system user for the duration of the sensing of an environmental condition. The light modules are, in one embodiment, 120 VAC rechargeable battery powered units designed to energize a lamp during a 120 VAC power failure or upon receiving a properly coded radio signal from any of the detectors which within radio signal range have sensed the environmental condition.

The light modules are intended to be plugged into standard wall mounted 120 VAC receptacles to provide illumination in close proximity to the floor (approximately 40 cm above the floor). These light modules may be fixed to the wall outlets with screw fasteners to prevent their removal or may be simply held in place by the outlet plug friction so that the light module may be removed and carried as an emergency flashlight during the environmental condition.

Numerous other advantages and features of the present invention will become readily apparent from the following detailed description of the invention and the embodiments thereof, from the claims and from the accompanying drawings.

BRIEF DESCRIPTION OF THE DRAWINGS

FIG. 1 is a block diagram of a detector with voice indication according to the invention;

FIG. **1A** illustrates a multi-detector system wherein the detectors communicate wirelessly directly with one another;

FIG. **2** is a block diagram of a light module usable in conjunction with the preferred embodiment of the detector diagram shown in FIG. **1**;

FIG. **3** illustrates an exemplary audible tonal pattern alarm and recorded voice message combination emitted by the detector of FIG. **1** when configured as a fire detector and using a recorded voice message as an environmental condition type identifier;

FIG. **4** illustrates an exemplary audible tonal pattern alarm and recorded voice message combination emitted by the detector of FIG. **1** when configured as a fire detector using a recorded voice message as an environmental condition location identifier;

FIG. **5** illustrates an exemplary audible tonal pattern alarm and recorded voice message combination emitted by the detector of FIG. **1** when configured as a carbon monoxide detector using a recorded voice message as an environmental condition type identifier;

FIG. **6** illustrates an alternate verbal message emittable by a fire or smoke detector as in FIG. **1**;

FIG. **7** illustrates an alternate verbal message emittable by a gas detector as in FIG. **1**; and

FIG. **8** illustrates one method for the user to specify the installation location of the detector of FIG. **1**.

DETAILED DESCRIPTION OF THE PREFERRED EMBODIMENTS

While this invention is susceptible of embodiment in many different forms, specific embodiments are shown in the drawing and will be described herein in detail with the understanding that the present disclosure is to be considered as an exemplification of the principles of the invention and is not intended to limit the invention to the specific embodiments illustrated.

This application is a continuation-in-part of Ser. No. 09/299,483 filed Apr. 26, 1999. The specification and figures thereof are incorporated herein by reference.

A block diagram of a detector **6**-i is illustrated in FIG. **1**. Detector **6**-i is contained within and carried by a housing **8**.

Detector **6**-i is powered, for example by a long life battery (alkaline or lithium, for example) **10**. Alternately, a plug can be provided for coupling to standard 120 VAC. AC power with a battery back-up is an alternative.

An environmental condition sensor **20**, for example a conventional smoke sensor, carbon monoxide sensor, natural gas sensor, or propane gas sensor, (or any multiple combination thereof) is any sensor type utilizing methods typically known in the art.

In one embodiment, sensor(s) **20** could each contain electronics (an ASIC for example) for purposes of making an alarm determination. For example, sensed smoke can be compared to a pre-selected threshold to establish the presence of a fire alarm condition. One or more values of sensed gas concentration can be processed to establish the presence of a gas alarm condition. In such a structure, upon sensing the alarm condition, the sensor **20** energizes an alarm unit **22** which sounds its local alarm to indicate that an environmental alarm condition has been sensed in proximity of the sensor **20**.

In an alternate embodiment, processor **30**, in conjunction with instructions prestored in ROM, PROM, EEPROM **32** or the like could be programmed to make an alarm determination. Random access memory **34** could also be coupled to processor **30** to provide temporary data storage. In this embodiment, processor **30** could select from one or more sets of tonal output patterns, stored in memory unit **32**, and use a selected pre-stored set to drive output transducer **22**. Types of storable patterns include a U.S. standard fire alarm pattern, a Canadian standard fire alarm pattern and one or more U.S. standard gas alarm patterns.

While the detector **6**-i of FIG. **1** could be used as a stand alone unit, with or without the transmitter **40** and receiver **70**, in an alternate embodiment, it can be one of a plurality of substantially identical detectors in a system. FIG. **1A** illustrates a system which incorporates a plurality of detectors **6-1**, **6-2** . . . **6**-n all of which are substantially identical to the detector **6**-i of FIG. **1**.

In multi-detector systems, see FIG. **1A**, the microprocessor **30** (in an active detector such as detector **6-1**), signals a wireless transmitter **40** to transmit a coded, wireless signal defined by a location code selector **50** to all other detectors, **6-2**, **6-3** . . . **6**-n. At the same time, optional light modules **100-1** . . . **100-2** (FIG. **2**) within receiving range can also be energized.

In the system of FIG. **1A**, if one of the detectors goes into alarm, for example detector **6-1**, in addition to sounding a local tonal alarm with an intervening verbal alarm identifying message, the active detector communicates wirelessly with other detectors **6-2** . . . **6**-n in the range of transmitter **40**. This communication is direct, detector-to-detector. This communication can be implemented by RF transmission, optical transmission, or sonic transmission without limitation. It will be understood that references to "Radio" as a form of wireless transmission in the figures is intended to be exemplary only and not limiting.

Each of the detectors **6-2** . . . **6**-n which receives a wireless communication from a displaced detector such as detector **6-1**, recognizes the alarm type and location of the originating detector given the contents of the received message. Hence, each of the receiving detectors can go into an appropriate alarm state and verbally provide location information and/or type information as to the source of the alarm. It will be understood that a detector, such as detector **6-3**, in direct communication with active detector **6-1** could also relay a similar message to detector **6**-n which might be out of direct range of the detector **6-1**.

Additionally, the active detector, such as detector **6-1**, can via the same transmission, activate a plurality of light modules **100-1** . . . **100**-n corresponding to the light module **100**-i of FIG. **2** and discussed subsequently. The activated light modules can provide a lighted escape pathway for an individual in the vicinity of the active detector **6-1** and can provide lighted regions in the vicinity of all light modules **100-1** . . . **100**-n located within range.

As discussed below, each of the detectors **6**-i can include a location code selector element and a radio address code selector element which is user settable. These user specifiable settings customize the behavior of an otherwise standard detector and provide advantageous flexibility.

The location code selector **50** is a user-set dip-switch/jumper arrangement that enables the user to define the location voice information that remote units will play upon receiving a signal from an alarmed detector that initially senses the environmental condition, such as a fire or a gas concentration. The location code selector **50** programs the transmitter **40** to transmit the coded signal.

By way of example, detectors located on the first floor of a dwelling may be set by the location code selector **50** to

transmit a wireless signal to all other detectors instructing them to emit the audible tonal pattern alarm suitable for the detector type plus a voice playback indicating "First Floor" or "Smoke on First Floor", "Fire", "Fire First Floor" or the like, with periodicity.

Detectors located on the second floor of a dwelling may be set by the location code selector **50** to transmit a wireless signal to all other detectors instructing them to emit the audible tonal pattern alarm suitable for the detector type plus a voice playback indicating "Second Floor" or "Smoke on Second Floor" with periodicity. The voice messages are played during periods of silence in the audible tonal pattern alarm.

The address code selector **60** is a user-set switch that enables the user to select a coded wireless signal to be used for both transmission and reception, the intercommunication link between the detector units. This code is user-selectable to alleviate interference with spurious radio waves, optical waves or sonic waves and with other similar systems that may be operating in close proximity and are not desired to be operated within the same system.

Upon reception of a valid wireless signal, the receiver and decoder **70** decodes the signal according to the address code selector **60** setting. Upon verification that the received wireless signal originating from a desired transmitter, the receiver and decoder **70** then signals the microprocessor **30** to energize and drive the alarm unit **22** to sound its audible tonal alarm pattern.

Processor **30** also signals the electronic voice storage **80** to play or output the proper pre-stored voice information through the audio transducer/speaker **90** to verbally indicate the location of the detector sensing the environmental condition. An optional microphone **96** provides a means for the user to record short custom location information into the electronic voice storage **80**.

It will be understood that a wide variety of electronic configurations for the detector **6**-i come within the spirit and scope of the present invention. As noted previously, the detector **6**-i can incorporate one or more different environmental condition sensors **20**. For example, detector **6**-i can incorporate a smoke sensor such an ionization-type smoke sensor or a photoelectric-type smoke sensor. In addition, that detector can incorporate a gas sensor, such a carbon monoxide sensor, a position sensor, a motion sensor or the like without limitation.

Various types of processing come within the spirit and scope of the detector **6**-i. For example, processor **30** can detect signals from the sensors **20** carried by the detector **6**-i, and, based on pre-stored executable instructions, make all necessary alarm decisions. This includes processing of signals from smoke sensors and/or processing of signals from gas sensors, thermal sensors and the like. Alternately, one or more of the sensors **20** can be coupled to an application specific integrated circuit (ASIC) which can carry out processing specific to that type of sensor. Output from the ASIC can in turn be coupled to the processor **30** if desired.

Further, it will be understood that the alarm output transducer **22** and the audio transducer **90** can be separate elements or they can be integrated into a single unitary output transducer without departing from the spirit and scope of the present invention. Processor **30** can be augmented, or replaced, with hard wired circuits as desired within the spirit and scope of the present invention.

An output light module **100**-i is illustrated in FIG. **2**. The module **100**-i is intended to be coupled to a 120 VAC electrical outlet by prongs **110**. Received AC powers a 120 VAC to low-voltage DC electrical power supply **120**. The low-voltage DC electrical power supply **120** maintains a rechargeable battery pack **130** in a state of full charge.

An internal lamp switch control **140** energizes a low-voltage lamp **150** during a 120 VAC power failure as determined by a 120 VAC power failure circuit **160** or by reception of a properly coded wireless signal by the receiver and decoder **170**. This signal will have been transmitted from a detector unit that has sensed an environmental alarm condition.

The receiver and decoder **170** is continuously active and is powered by the power supply **120** through the battery pack **130** when 120 VAC power **110** is available or by the battery pack **130** upon 120 VAC power failure. The receiver and decoder **170** interprets the wireless signals received as programmed by the user-selectable address code selector **180**. The address code selector **180** is set to the same address code as the address code selector **70** in FIG. **1** if the light module **100**-i is to be part of the same system, see FIG. **1**A.

Upon reception of a valid wireless signal from a detector that has sensed an environmental alarm condition, the receiver and decoder **170** signals the internal electronic switch **140** to energize the low-voltage lamp **150**.

The low-voltage lamp **150** is powered from the power supply **120** as long as the 120 VAC power supply **110** is functioning. Otherwise, the low-voltage lamp **150** is powered by the rechargeable battery pack **130**.

Once activated by reception of a valid wireless signal, the low-voltage lamp **150** remains energized at least until no further valid wireless signals are received. If desired, a manual reset can be provided by a user operating the reset switch **190**. When the low-voltage lamp **150** is energized due to a 120 VAC supply failure, it remains energized until the 120 VAC power supply is reactivated or the energy of the battery pack **130** is expended.

In addition, other types of receiving units are within the spirit and scope of the present invention. One alternate type of receiving unit is a wirelessly coupled fire extinguisher.

FIG. **3** is an exemplary smoke alarm timing plot **200** of the sound emitted by an alarmed detector **6**-i which incorporates a smoke sensor. In the output pattern of FIG. **3**, both an audible tonal pattern alarm **210** and a recorded voice message **220** convey information about the specific environmental condition detected.

In FIG. **3**, the detector embodiment is a fire detector implemented as a smoke detector using voice as an environmental condition type identifier only. The recorded voice message **220** is inserted into the defined silence periods of the prescribed audible tonal pattern alarm **210** consistent with conventional smoke detector alarms.

Other messages identifying alarm type could be used. For example, instead of "Smoke", the detector could verbalize "Fire" or "Fire Fire". In the example of FIG. **3**, groups of three spaced apart 0.5 second fire alarm tones, generated by output transducer **22** (FIG. **1**), are spaced apart by 1.5 second silent intervals. The verbal alarm message **220** is output repetitiously during the 1.5 second silence interval. The verbal messages specify and can reinforce the type of alarm. Other tone patterns and silent intervals come within the spirit and scope of the present invention.

FIG. **4** illustrates an exemplary alarm timing plot of the sound **230** emitted by a smoke detector using an audible tonal pattern alarm **240** to convey a smoke alarm and a recorded voice message **250** to convey the location of the detected fire and smoke. In FIG. **4**, the environmental

condition detector embodiment is a smoke detector using voice as an environmental condition location identifier only. The recorded voice message **250** is inserted into the defined silence periods of the prescribed audible tonal pattern alarm **240** consistent with conventional smoke detector alarms.

FIG. **5** illustrates an exemplary alarm timing plot of sound **260** emitted by a detector such as detector **6**-i (FIG. **1**) with a CO sensor. An audible tonal pattern alarm **270** indicative of detected carbon monoxide and a recorded voice message **280** convey the specific type of environmental condition, carbon monoxide and the location of the alarmed detector sensing the dangerous levels of carbon monoxide.

In FIG. **5**, the environmental condition detector embodiment is a carbon monoxide detector using voice as both an environmental condition type identifier and location identifier. The recorded voice message **280** is inserted into the defined silence periods of the prescribed audible tonal pattern alarm **270** consistent with conventional carbon monoxide alarms.

FIG. **6** illustrates a tonal/verbal smoke detector output with an alternate verbal message. FIG. **7** illustrates a tonal/verbal carbon monoxide detector output with an alternate verbal message. The exemplary tonal pattern alarms and recorded voice messages are illustrative and not intended to exhaustively illustrate all possible tonal alarm patterns and recorded voice messages.

FIG. **8** illustrates a selectable coding apparatus **290**, corresponding to selector **50** for the user to select one of the pre-defined locations when the detector **6**-i (FIG. **1**) has been installed in a dwelling. Selectable coding elements such as a jumper **300** on DIP header pins **310** or DIP switches (not shown) are alternate methods to define the installation location of a detector. Typical dwelling locations are shown in FIG. **6**. The list of FIG. **6** is not intended to be exhaustive. Alternate mechanisms for specifying location also come within the spirit and scope of the present invention.

In summary, in one embodiment, the present inventive wireless communicative environmental alarm system with voice indication for indicating an alarm condition due to the presence of smoke, carbon monoxide gas, natural gas, propane gas or any multiple combination of these offending agents includes one or more sensors for indicating the presence of the selected environmental conditions wherein the sensor(s) is/are any known type. Actuation of an output transducer generates an audible tonal alarm pattern with voice for the duration of the environmental condition.

Wireless direct communication between detectors utilizes user-selectable, coded, signal transmission. The detectors can include a user-selectable, coded wireless transmitter and receiver.

The communication signal can be coded to verbally indicate the location within the dwelling of the detector that has sensed the respective environmental condition(s) by preset switches or manually settable elements for the user to manually select the verbal information indicative of each environmental condition detector location to be emitted. This selected information will be verbally emitted by all environmental condition detectors that receive the coded wireless signal transmission from the detector that has gone into alarm.

Circuitry is included for conservation of battery energy through intermittent activation of the wireless receiving circuitry. Low power electronic circuitry is included to control the activation intermittency of the receiving circuitry.

Test circuits for electronically simulating an environmental condition within the respective detector include a test switch accessible to the user operating the test switch activates the local audible alarm and initiates a wireless transmission to all other environmental condition detector units with an embedded code indicative of the location of the detector under test to determine operability of components therein.

Verbal information regarding the location of the sensed environmental condition, the type of the sensed environmental condition, or both, is emitted during silent periods within the audible tonal pattern alarm emitted by the active detector during an alarm condition. Multiple tonal patterns can be stored in detector memory.

The invention also pertains to a low voltage direct current, rechargeable light module to illuminate areas of a dwelling and paths of egress from a dwelling during an alarm condition. Exemplary modules include connectors for direct connection to a 120 VAC power supply wall outlet or the like; circuitry for conversion of 120 VAC power to a low voltage direct current, and a source of illumination wherein the illumination source includes, for example, a low voltage lamp.

The module may include circuitry by which to energize the low voltage lamp upon failure of 120 VAC power supply; or upon reception of a coded wireless signal from a detector's transmission. Circuitry is included for reception and decoding of the received wireless signal wherein a user can select the code for decoding. The system may also include a facility for manually de-energizing the lamp, such as a reset switch, accessible to the user.

It will be understood that in instances where a detector includes two or more sensors that it will include multiple tonal alarms and verbal messages, one set for each sensor. Similarly, multiple coded messages specifying alarm type, associated with each respective sensor, can be wirelessly transmitted to other detectors.

Output transducers, such as transducer **22**, can include loud speakers or piezoelectric elements. Transducer **90** can include loud speakers.

The various preferred embodiments described above are merely descriptive of the present invention and are in no way intended to limit the scope of the invention. Modifications of the present invention will become obvious to those skilled in the art in light of the detailed description above, and such modifications are intended to fall within the scope of the appended claims.

What is claimed:

1. An environmental condition detection system having:

a minimum of two environmental condition detectors, each said environmental condition detector comprising

(a) at least one sensor for detecting the presence of a selected environmental condition,

(b) an audible alarm having at least one user unalterable, prescribed audible tonal pattern active in response to sensing said environmental condition in accordance with a predetermined criterion;

(c) voice circuitry for playing at least one user unalterable, pre-recorded voice message wherein the message verbally describes the type of detected environmental condition for the duration of detection thereof in accordance with said criterion such that said pre-recorded voice message is emitted during periods of silence in said prescribed audible tonal pattern alarm; and

(d) a transmitter and a receiver for wireless direct communication with other detectors of the system wherein each transmitter transmits coded wireless

signals and each said receiver responds to received, coded signals, each said detector emitting at least one user unalterable electronically pre-recorded voice message, the selection of which is defined by electronic decoding of the received wireless signal transmitted by a condition detector sensing said environmental condition;

(e) selectable coding circuitry to define the installation location of the respective detector and wherein the voice circuitry plays a location specifying message;

wherein said at least one sensor is selected from a group including a smoke sensor, a carbon monoxide gas sensor, a natural gas sensor, and a propane gas sensor.

2. The system of claim **1** wherein at least some of the detectors include at least a second sensor of a different type and wherein the voice circuitry therein plays a second user unalterable pre-recorded voice message which describes a second type of detected environmental condition such that the pre-recorded voice is emitted during periods of silence in a prescribed audible tonal pattern.

3. The system of claim **1** further comprising a light module to illuminate adjacent areas during the detection of said environmental condition, said a light module comprising a lamp, an element for a plug-in type connection of the module to a power supply, a rechargeable battery for powering said light module upon a power failure, a control circuit and a wireless receiver, said circuit causing said lamp to be energized by upon receipt of a selected coded wireless signal by the receiver.

4. The system of claim **1** wherein said voice circuitry for playing said pre-recorded voice messages has further circuitry to provide for the selection of language type presentation of said pre-recorded voice messages.

5. The system of claim **1** wherein said audible alarm comprises storage for multiple tonal alarm patterns.

6. The system of claim **5** which includes a processor programmed for retrieving a selected tonal alarm pattern and presenting same to the audible alarm.

7. A system as in claim **1** wherein the type of wireless communication is selected from a class which includes acoustic transmission, optical transmission and radio frequency transmission.

8. A system as in claim **1** which includes at least one light module having:

a wireless receiver;

control circuitry coupled to the receiver; and

a source of illumination coupled to the control circuitry wherein the control circuitry energizes the source in response to receipt of a selected wireless signal.

9. A system as in claim **8** which includes a power supply.

10. A system as in claim **9** wherein the supply comprises a battery.

11. A system as in claim **9** wherein the supply includes a connector for engaging an exterior source of energy.

12. An environmental condition detection system comprising:

a minimum of two environmental condition detectors, each said environmental condition detector comprising

(a) at least one sensor for detecting the presence of a selected environmental condition,

(b) an audible alarm having at least one user unalterable prescribed audible tonal pattern active in response to sensing said environmental condition in accordance with a predetermined parameter;

(c) circuitry for playing at least one user unalterable pre-recorded voice message wherein the message verbally describes the location of the detected environmental condition for the duration of detection thereof in accordance with the parameter such that said pre-recorded voice message is emitted during selected periods of silence in said prescribed audible tonal pattern alarm;

(d) a transmitter and a receiver for wireless direct communication with other detectors of the system wherein each transmitter transmits coded wireless signals and each said receiver responds to received, coded signals, each said detector emitting at least one user unalterable electronically pre-recorded voice message, the selection of which is defined by electronic decoding of the received wireless signal transmitted by a detector sensing said environmental condition; and

(e) wherein said circuitry for playing said pre-recorded voice messages has a second circuit to provide for the selection of language-type presentation of said pre-recorded voice messages.

13. The system as in claim **12** wherein the circuitry plays a user unalterable. condition specifying message during other periods of silence.

14. The system of claim **13** wherein at least some of the detectors include at least a second sensor of a different type and wherein the circuitry therein plays a second, user unalterable condition specifying pre-recorded voice message such that the pre-recorded voice is emitted during periods of silence in a prescribed audible tonal pattern.

15. The system of claim **14** wherein said audible alarm comprises storage for multiple tonal alarm patterns.

16. The system of claim **15** which includes a processor programmed for retrieving a selected tonal alarm pattern and presenting same to the audible alarm.

17. The system of claim **12** wherein said sensors are selected from a group including a smoke sensor, a carbon monoxide gas sensor, a natural gas sensor, and a propane gas sensor.

18. The system of claim **12** further comprising a light module to illuminate adjacent areas during the detection of said environmental condition, said a light module comprising a lamp, an element for a plug-in type connection of the module to a power supply, a rechargeable battery for powering said light module upon a power failure, a control circuit and a wireless receiver, said circuit causing said lamp to be energized by upon receipt of a selected coded wireless signal by the receiver.

19. A system as in claim **12** wherein the type of wireless communication is selected from a class which includes acoustic transmission, optical transmission and radio frequency transmission.

20. A system as in claim **12** which includes at least one light module having:

a wireless receiver;

control circuitry coupled to the receiver; and

a source of illumination coupled to the control circuitry wherein the control circuitry energizes the source in response to receipt of a selected wireless signal.

21. A system as in claim **20** which includes a power supply.

22. A system as in claim **21** wherein the supply includes at least one prong for engaging an exterior source.

23. A method for providing environmental condition detection for a multi-section region comprising:

(a) locating a minimum of two environmental condition detectors in different sections of the region;

(b) setting a selectable coding element in each detector to define the location of the respective detector within a section;

(c) sensing an environmental condition and playing a user unalterable pre-recorded voice message, which verbally describes at least the location of the sensed condition;

(d) communicating wirelessly with another, selected detector such that the pre-recorded voice message at the sensed location is also emitted at the another detector.

24. A method as in claim **23** which includes verbally stating a type of sensed condition.

25. A method as in claim **23** which includes:

selecting the wireless communication from a class which includes acoustic communication, optical communication radio-type communication.

26. A method as in claim **23** which includes:

communicating wirelessly with a displaced source of illumination; and

energizing the source in response to receipt of a selected communication.

27. A detector comprising:

a) at least one sensor for sensing the presence of an environmental condition, wherein said sensor is selected from a group including a smoke sensor, a carbon monoxide gas sensor, a natural gas sensor, and a propane gas sensor and wherein said sensor further includes at least a second, different sensor,

b) a transmitter for transmitting a radio frequency signal,

c) a selector to define a coded radio frequency signal to be transmitted by said transmitter,

d) a receiver for radio signal reception,

e) an alarm code selector to define a voice information code to be transmitted in said radio signal, and

f) an audio transducer that emits selected user unalterable voice information in response to the receiver receiving a selected radio signal transmitted by another transmitter.

28. A detector as in claim **27** which includes circuitry for storage of at least one user unalterable alarm type voice message.

29. A detector as in claim **28** which includes circuitry for storage of a second, location specifying voice message.

30. A self-contained ambient condition detector comprising:

a housing;

at least one ambient condition sensor carried by the housing;

a control element, carried by the housing and coupled to the sensor, for establishing the presence of a selected alarm condition;

a wireless receiver coupled to the control element wherein the receiver and control element receive and decode wireless messages transmitted by other detectors;

a manually settable location specifying member, coupled to the control element whereby a user can specify a location at which the housing is installed;

voice annunciating circuitry and a plurality of stored user unalterable verbal outputs with one output identifying, at least in part, an alarm type and at least one output identifying, at least in part, an alarm location wherein in response to a received wireless message from another detector, the voice annunciation circuitry outputs at least one of a verbal alarm type and a verbal alarm location; and

a wireless transmitter, coupled to the control element whereby the control element includes circuitry for formatting wireless alarm specifying messages for transmission to displaced, substantially identical, detectors whereby the receiving detectors receive the alarm specifying messages for verbal presentation thereat;

wherein transmitted messages include location information as specified by the manually settable member.

31. A detector as in claim **30** wherein the at least one sensor is selected from a class which includes a position sensor, a motion sensor, a breakage sensor, a gas sensor, and a fire sensor.

32. A detector as in claim **30** which includes a second, different, sensor wherein the sensors are selected from a class which includes a gas sensor, a smoke sensor and a thermal sensor.

33. A detector as in claim **30** wherein the control element comprises a programmed processor and associated storage unit which includes at least one prestored audible alarm indicating tonal output pattern.

34. A detector as in claim **33** which includes a plurality of tonal output patterns pre-stored in the unit wherein one of the patterns is a fire alarm pattern.

35. A detector as in claim **34** wherein another of the prestored patterns is a gas alarm pattern.

36. A detector as in claim **30** wherein the control element comprises a storage unit for digitally storing at least one alarm indicating tonal output pattern.

37. A detector as in claim **30** wherein the annunciating circuitry comprises a speech synthesizer.

38. A detector as in claim **30** which includes a tonal output device coupled to the control element wherein the control element in response to the presence of the selected alarm condition, drives the output device to emit pluralities of alarm specifying output tones wherein the pluralities are temporally spaced apart from one another a selected interval and wherein the voice annunciating circuitry outputs at least one of the verbal alarm type and the verbal alarm location during the selected intervals.

39. A detector as in claim **38** wherein the pluralities of output tones are user unalterable.

40. A detector as in claim **39** wherein in response to the received wireless message, the voice annunciation circuitry outputs at least one of the verbal alarm type and the verbal alarm location during the selected intervals.

41. An alarm system comprising:

a plurality of wirelessly coupled, self-contained detectors wherein each detector includes a transceiver for wireless transmission of and reception of coded messages, directly communicated between detectors, wherein the messages include at least alarm specifying information transmitted by a detector exhibiting an alarm condition; and

wherein at least some detectors include voice output circuitry for verbally broadcasting user unalterable messages identifying the existence of an alarm condition at a different detector in response to a coded message directly received therefrom;

wherein at least some of the detectors include manually settable location specifying circuitry and the transmitted messages therefrom include both alarm and location information;

wherein the voice output circuitry of at least some of the detectors verbally outputs both alarm and location information received from another detector.

42. A system as in claim **41** wherein at least some of the detectors include at least one ambient condition sensor

selected from a class which includes at least a fire sensor, a gas sensor, a position sensor, a motion sensor and a breakage sensor.

43. A system as in claim **42** wherein the fire sensors comprise one or more of a thermal sensor, a photoelectric smoke sensor and an ionization smoke sensor.

44. A system as in claim **41** wherein at least some of the detectors include an alarm indicating audible output transducer.

45. A system as in claim **44** wherein at least some of the transducers comprise piezoelectric transducers.

46. A system as in claim **44** wherein verbal alarm specifying messages are interleaved with user unalterable tonal alarm indicating messages.

47. A system as in claim **46** wherein verbal alarm location messages are interleaved with tonal alarm indicating messages.

48. A system comprising:

at least one detector wherein the detector includes an ambient condition sensor and control circuitry for detecting the presence of a selected ambient condition and for emitting a user unalterable, patterned tonal alarm indicative of the detected condition wherein groups of tones are spaced apart by a first interval and tones in a group are spaced apart by a second, shorter, interval;

a transmitter coupled to the control circuitry for wirelessly emitting a condition specifying control signal to at least one displaced illumination module wherein the module comprises at least one prong for releasibly coupling to an external source of power, a receiver for receipt of the condition specifying control signal, a light source and circuitry for illuminating the source in response to receipt of the condition specifying control signal; and

voice annunciating circuitry for playing at least one, user unalterable, pre-recorded voice message during the first intervals wherein the message specifies the type of condition and wherein the voice annunciating circuitry is located at least in part at the detector;

a settable location specifying element coupled to the control circuit and wherein the annunciating circuitry verbally introduces a location specifying message, in accordance with a setting of the location specifying element, into some of the first intervals which would otherwise be silent;

a second detector, substantially identical to the at least one detector wherein the detectors can both be in wireless communication with the module.

49. A system as in claim **48** wherein the detectors each include a manually changeable, system specifying code incorporated into the condition specifying control signal.

50. A system as in claim **49** wherein the module includes circuitry for establishing the presence of a predetermined system specifying code in a received condition specifying control signal.

51. A system as in claim **50** wherein the module includes a manually changeable, system specifying code.

52. A system as in claim **48** wherein the module includes a battery.

53. A system as in claim **48** wherein the verbal type specifying message and the location specifying message are stored at the at least one detector.

54. An electrical unit comprising:

at least one of a condition sensor and source of illumination;

a control circuit responsive to a selected ambient condition to produce at least one output signal indicative thereof;

an audible output device, coupled to the control circuit and drivable thereby in response to the selected condition, to produce groups of user unalterable, alarm-type indicating tones wherein groups of tones are spaced apart a first interval and wherein tones in a group are spaced apart from one another a second, shorter interval;

voice output circuitry, coupled to the control circuit and driven thereby to produce at least one user unalterable alarm specifying output message which verbally identifies the same alarm as does the tonal output pattern wherein the output message is injected into at least some of the first intervals between tonal groups;

a settable system specifying element coupled to the control circuit for establishing a coded system specific identifier; and

at least one of a transmitter and a receiver coupled to the control circuitry to respectively send or receive a wireless signal indicative of the condition wherein sent signals include a system identifier and wherein received signals include a system identifier.

55. An electrical unit as in claim **54** wherein the sensor and the transmitter are coupled to the control circuit.

56. An electrical unit as in claim **54** wherein the source and the receiver are coupled to the control circuit.

57. An electrical unit as in claim **54** wherein the control circuit includes a programmed processor and wherein instructions for implementing at least the alarm condition indicating tones are executed thereby.

58. An electrical unit as in claim **54** which includes a settable location specifying element and wherein the voice output circuitry, when driven by the control circuit verbally produces a location specifying message, in accordance with a setting of the location specifying element in some of the first intervals which would otherwise be silent, provided, that the coded system specific identifier matches any received system identifier.

59. An electrical unit comprising:

at least one of a condition sensor and a source of illumination;

a control circuit responsive to a selected ambient condition to produce at least one output signal indicative thereof;

an audible output device, coupled to the control circuit and drivable thereby in response to the selected condition, to produce groups of user unalterable, alarm type indicating tones wherein groups of tones are spaced apart a first interval and wherein tones in a group are spaced apart from one another a second, shorter interval;

voice output circuitry, coupled to the control circuit and driven thereby to produce at least one user unalterable output message which verbally identifies an alarm location wherein the output message is injected into at least some of the first intervals between tonal groups;

a settable system specifying element coupled to the control circuit for establishing a coded system specific identifier; and

at least one of a transmitter and a receiver coupled to the control circuitry to respectively send or receive a wireless signal indicative of the condition wherein sent signals include a system identifier and wherein received signals include a system identifier.

* * * * *

US006377182B1

(12) **United States Patent**
Devine et al.

(10) **Patent No.: US 6,377,182 B1**
(45) **Date of Patent: Apr. 23, 2002**

(54) **SMOKE DETECTOR WITH SENSOR HAVING IMPROVED MOUNTING CONFIGURATION**

(75) Inventors: **Mark A. Devine**, Shorewood; **Mark A. Watson**, Plainfield; **Andrew J. Ivanecky**, Aurora; **Lulzim Osmani**, Glen Ellyn; **Kenneth L. Venzant**, Bolingbrook; **Samuel D. Lopez**, Oswego, all of IL (US)

(73) Assignee: **BRK Brands, Inc.**, Aurora, IL (US)

(*) Notice: Subject to any disclaimer, the term of this patent is extended or adjusted under 35 U.S.C. 154(b) by 0 days.

(21) Appl. No.: **09/692,758**

(22) Filed: **Oct. 19, 2000**

Related U.S. Application Data

(60) Provisional application No. 60/165,874, filed on Nov. 16, 1999.

(51) **Int. Cl.**[7] **G08B 17/10**
(52) **U.S. Cl.** **340/628**; 340/629; 340/630
(58) **Field of Search** 340/628, 629, 340/630, 632

(56) **References Cited**

U.S. PATENT DOCUMENTS

4,319,234	A	*	3/1982	Rice 340/328
4,796,015	A	*	1/1989	Admire, Jr. 340/693
4,887,073	A	*	12/1989	Nakao et al. 340/693
5,729,207	A	*	3/1998	Yamano 340/628

OTHER PUBLICATIONS

The configuration of a smoke detector as shown in Figures 1A, 1B and 1C of the attached sheet from the present application illustrating the configuration of a prior art smoke detector of a type on sale in the USA more than a year before the earliest filing date the present application is entitled to claim.

* cited by examiner

Primary Examiner—Edward Lefkowitz
(74) *Attorney, Agent, or Firm*—Rockey, Milnamow & Katz, Ltd.

(57) **ABSTRACT**

A smoke detector has a geometry that locates a sensor or sensors at or near a boundary layer of smoke movement thus facilitating smoke entry into the sensor and/or sensors. The sensors are mounted so as to protrude from the bottom of a cover instead of into the cover of the detector.

38 Claims, 3 Drawing Sheets

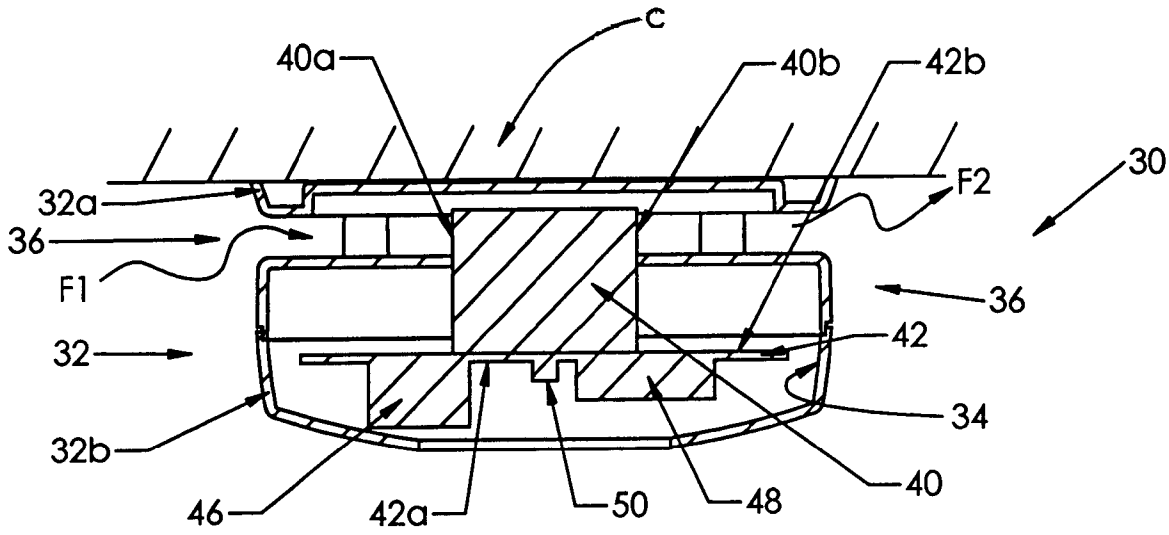

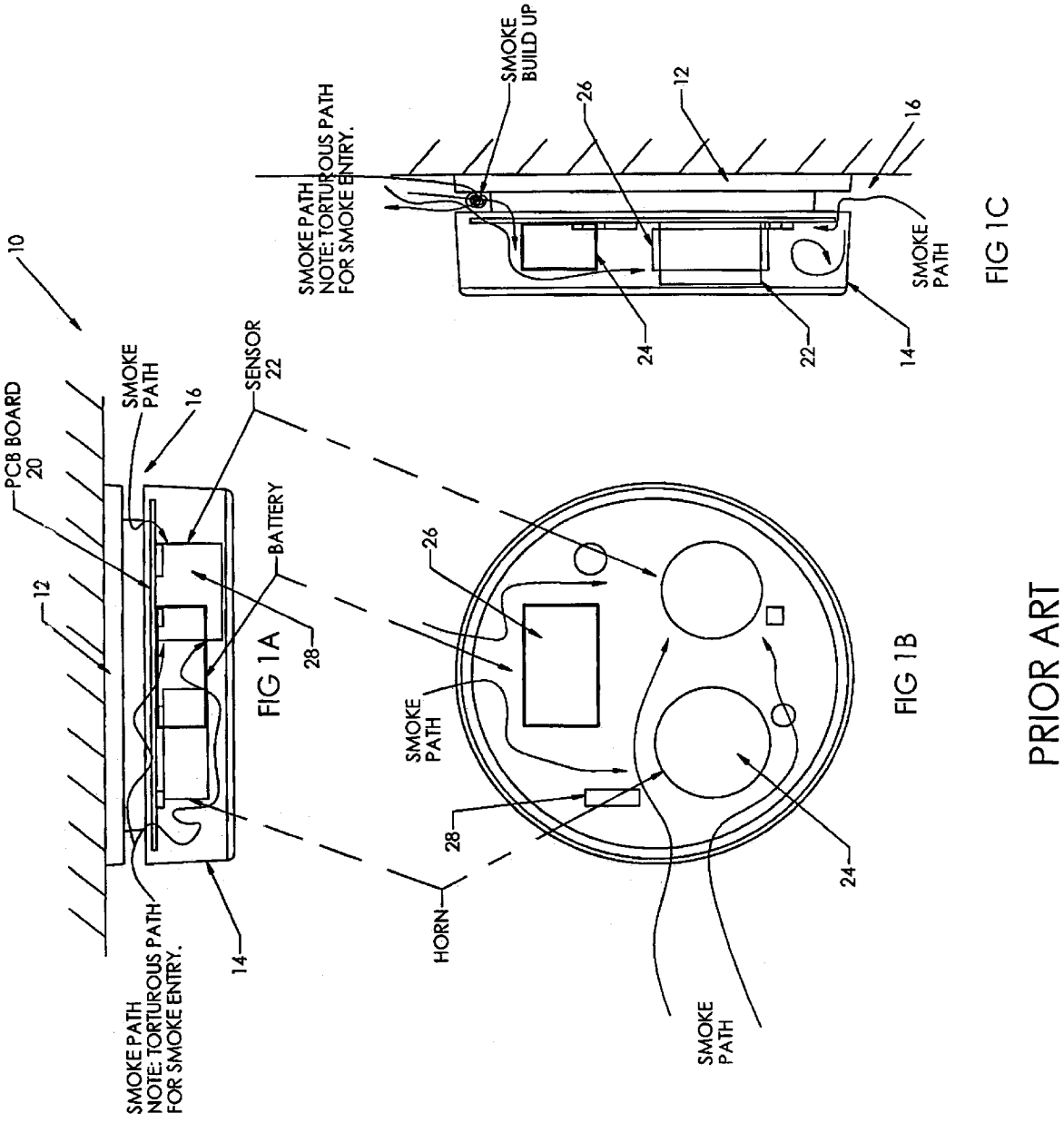
10
PCB BOARD
20
12
SMOKE
PATH
16
SENSOR
22
BATTERY
28
14
SMOKE PATH
NOTE: TORTUROUS PATH
FOR SMOKE ENTRY.
FIG 1A
26
SMOKE
PATH
28
HORN
24
SMOKE
PATH
FIG 1B
SMOKE PATH
NOTE: TORTUROUS PATH
FOR SMOKE ENTRY.
SMOKE
BUILD UP
26
12
16
SMOKE
PATH
24
22
14
FIG 1C
PRIOR ART

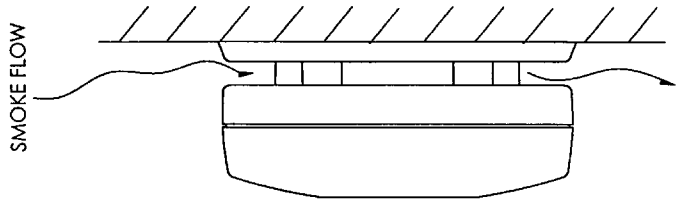

FIG 2A

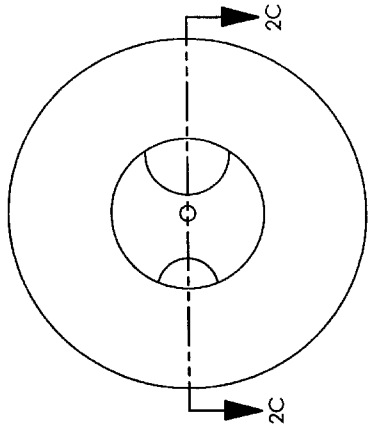

FIG 2B

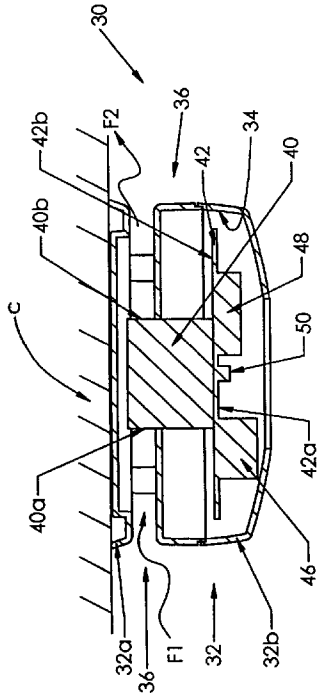

FIG 2C

INVERTED SENSOR SMOKE DETECTOR

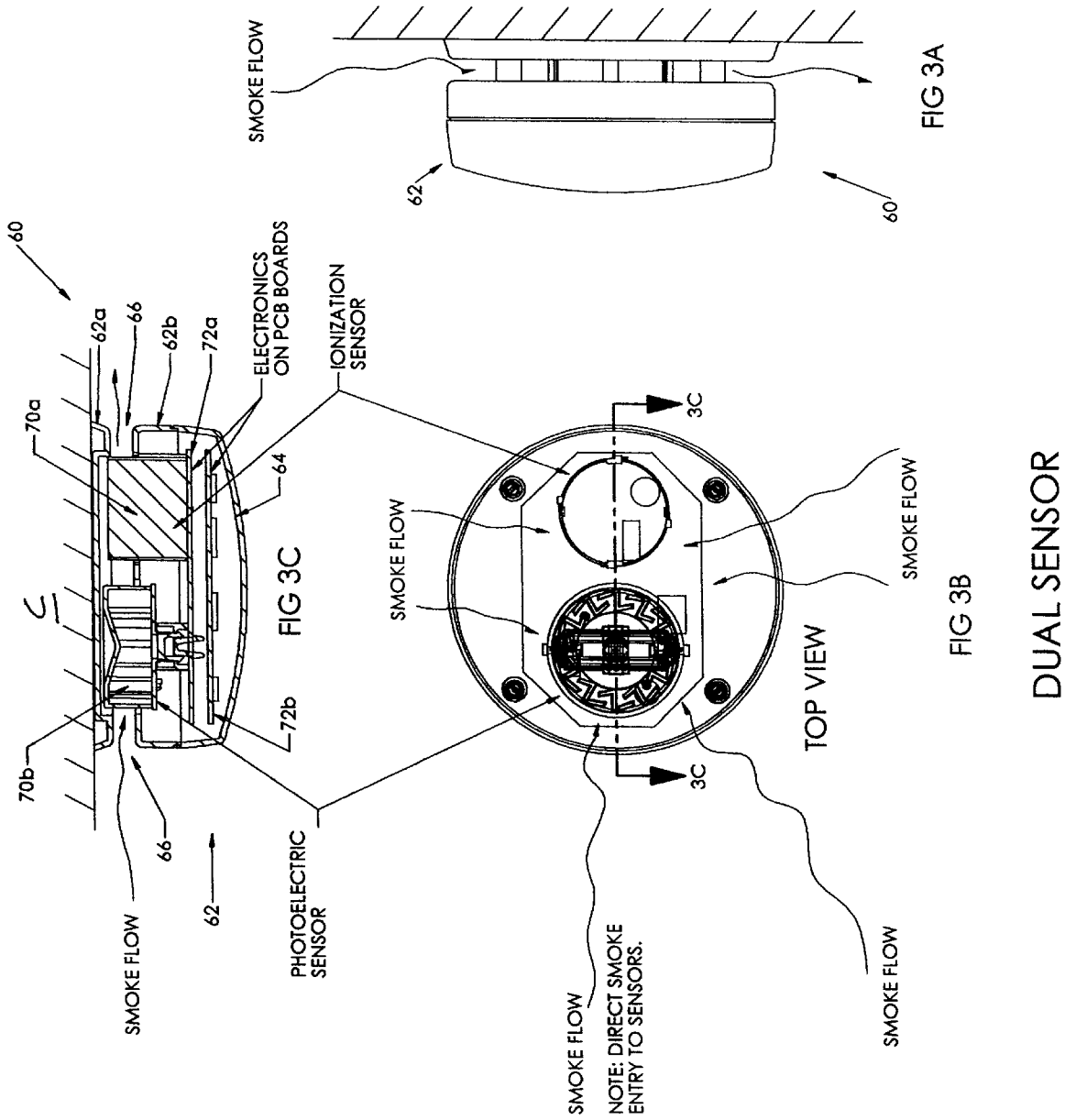
SMOKE FLOW
62
60
FIG 3A
60
62a
66
62b
72a
ELECTRONICS ON PCB BOARDS
IONIZATION SENSOR
70a
64
72b
70b
66
62
SMOKE FLOW
PHOTOELECTRIC SENSOR
FIG 3C
3C
SMOKE FLOW
SMOKE FLOW
TOP VIEW
3C
SMOKE FLOW
NOTE: DIRECT SMOKE ENTRY TO SENSORS.
SMOKE FLOW
FIG 3B
DUAL SENSOR

SMOKE DETECTOR WITH SENSOR HAVING IMPROVED MOUNTING CONFIGURATION

This application claims the benefit of the earlier filing date of Provisional Application Ser. No. 60/165,874, filed Nov. 16, 1999.

FIELD OF THE INVENTION

This invention pertains to ambient type sensors such as photoelectric and ionization smoke detectors. More particularly, the invention pertains to structures for locating the respective sensor/sensors with an orientation that facilitates the ingress of smoke into the sensors

BACKGROUND OF THE INVENTION

Known smoke detector designs mount the respective sensor inside a housing or on top of the housing. Both ionization and photoelectric sensors have been located inside housings having complicated vents and baffling designs in order to promote the ingress of smoke. Smoke detectors having sensors mounted inside the cover of the detector may have barriers such as the p-horn, battery, or other electrical components that interfere with smoke detection due to interference with smoke flow.

FIGS. **1**A–**1**C illustrate relevant aspects of a prior art smoke detector **10**. The detector **10** includes a base **12** intended to be attached to a ceiling C. A cover **14** is carried on the base **12**. A plurality of openings indicated generally at **16** provide smoke pathways into and out of the cover **14**.

In the detector **10**, a printed circuit board **20** is carried adjacent to the mounting base **12**. The printed circuit board **20** in turn carries an ambient condition sensor, such as a smoke sensor **22**, an audible output device such as a horn or the like **24**, and a power supply such as a battery **26**. Other electrical or electronic components generally indicated at **28**, are conventionally carried by the printed circuit board **20** often on the same side as are sensor **22**, horn **24** and battery **26**.

The configuration illustrated in FIGS. **1**A, **1**B and **1**C results in convoluted and tortuous smoke flow paths in and out of openings **16** and into cover **14**. Placing the sensor **22** on the printed circuit board as in FIGS. **1**A, **1**B and **1**C directs the sensor **22** into the internal volume of the cover **14** away from smoke flow adjacent ceiling C. To compensate for placement of the sensor **22**, known detectors have included vents and baffles for the purpose of promoting smoke flow to and from the respective sensor.

It would be desirable from a cost and design manufacturing perspective to be able to eliminate known vents, baffles and flanges. Preferably such reduced complexity might promote improved flow into and out of the respective housings.

SUMMARY OF THE INVENTION

The invention takes advantage of both the laminar and turbulent nature of smoke flow. Often smoke detectors are ceiling mounted. The sensor or sensors are arranged within the detector so as to be located near the respective mounting surface, such as near or on the ceiling.

The sensors are carried adjacent to a mounting surface of the detector as opposed to being mounted in the cover as in prior art smoke detectors. The design hereof displaces the sensor/sensors away from electronic components and closer to the mounting surface such as the ceiling. An air sampling gap exposes the sensor/sensors to air and smoke adjacent to the ceiling.

One or more sensors (ionization or photoelectric) may be carried adjacent to the mounting member for the detector. The present invention promotes omni-directional ingress of smoke into the detector.

Unlike the prior art, this invention eliminates the need for complicated venting geometries and complex baffling designs. This follows since the sensors are located adjacent to the mounting surface so as to promote direct ingress and egress of airborne smoke, and thus improved directionality.

Numerous other advantages and features of the present invention will become readily apparent from the following detailed description of the invention and the embodiments thereof, from the claims and from the accompanying drawings.

BRIEF DESCRIPTION OF THE DRAWINGS

FIGS. **1**A, **1**B and **1**C taken together are various views of a prior art smoke detector;

FIG. **2**A is a side elevational view of a detector in accordance with the present invention;

FIG. **2**B is a top plan view of the detector of FIG. **2**A taken along plane **2**A—**2**A;

FIG. **2**C is a side sectional view of the detector of FIG. **2**A taken along plane **2**C—**2**C;

FIG. **3**A is a side elevational view of a dual sensor detector in accordance with the present invention;

FIG. **3**B is a view taken along plane **3**B—**3**B of FIG. **3**A; and

FIG. **3**C is a side sectional view taken along plane **3**C—**3**C of FIG. **3**B.

DETAILED DESCRIPTION OF THE PREFERRED EMBODIMENTS

While this invention is susceptible of embodiment in many different forms, there are shown in the drawing and will be described herein in detail specific embodiments thereof with the understanding that the present disclosure is to be considered as an exemplification of the principles of the invention and is not intended to limit the invention to the specific embodiments illustrated.

FIGS. **2**A, **2**B, **2**C illustrate various views of a detector **30** in accordance with the present invention. The detector **30** includes a housing generally indicated at **32** having a base **32***a* which is intended to be attached to a mounting surface such as a ceiling C. The housing **32** includes a cover **32***b* coupled to the base **32***a*.

The cover **32***b* substantially defines an internal region **34**. The region **34** is open to the ambient atmosphere via slots, ports or openings generally indicated at **36** located adjacent to the base **32***a*. The openings or slots **36** are disposed around the housing **32**.

The housing **32** carries an ambient condition sensor **40**, which could be a smoke sensor, with a portion thereof positioned adjacent to the base **32***a*. The sensor **40** could be carried within the region **34** by a planar mounting element **42**. Element **42** could be implemented as one or more printed circuit boards.

The element **42** carries an audible output device **46** and a power supply, for example a replaceable battery **48**, on a side **42***a* displaced from a side **42***b* upon which the sensor **40** is mounted. Other electronic components **50**, for example control circuitry, as would be understood by those of skill in the art could be carried on the side **42***a* interconnected with audible output device **46** and battery **48**. Electrical connec-

tions to sensor **40** could be made using plated through holes or vias in the board **42** or other known methods as would be understood by those of skill in the art.

The configuration of detector **30** is particularly advantageous in that sensor **40** has input/output openings **40***a*, **40***b* which are in an ambient atmospheric flow pattern indicated generally at F**1** and F**2** through openings **36**. In this regard, the position of other components **46**, **48** and **50** on side **42***a* of the board or element **42** has located those components out of the ambient flow stream, F**1**, F**2**.

An inflow and outflow F**1**, F**2** of ambient atmosphere, which could carry fire indicating smoke, is able to flow unimpeded into and out of sensor **40** in a symmetrical fashion relative to the housing **32**. No special vanes or deflecting elements are required to cause inflow or outflowing ambient, smoke carrying, atmosphere to flow into openings **40***a*, **40***b* of sensor **40** since those openings and the associated portions of sensor **40** are located directly in the flow path.

It will be understood that the sensor **40** could be implemented as an ionization-type or photoelectric-type smoke sensor without departing from the spirit and scope of the present invention. Other types of smoke sensors or gas sensors if desired could also be used without departing from the spirit and scope of the present invention. Preferably sensor **40** would be symmetrically located on a center line L of housing **32**.

FIGS. **3**A, **3**B and **3**C illustrate various views of a dual sensor detector **60** in accordance with the present invention. Detector **60** includes a housing generally indicated at **62** which has a base **62***a* intended to be mounted to a surface such as a ceiling C. Additionally, housing **62** includes a cover **62***b* which substantially defines an internal region **64**. A plurality of openings, generally indicated at **66**, provides for an inflow and outflow of ambient atmosphere which could include airborne smoke which has accumulated adjacent to ceiling C.

Detector **30** includes first and second ambient condition sensors **70***a* and **70***b*. By way of example, and not limitation, sensor **70***a* could be implemented as an ionization-type smoke sensor. Sensor **70***b* could be implemented as a photoelectric-type smoke sensor. One of the sensors could be a gas sensor.

The sensors **70***a*, **70***b* are mounted on a printed circuit board **72***a* carried in housing **62**. The printed circuit board **72***a* and the sensors **70***a, b* are oriented such that inflow and outflow ports of the respective sensors are located adjacent the ports or openings **66** to promote a direct inflow and outflow of ambient atmosphere including airborne smoke therein.

For exemplary purposes, a second printed circuit board **72***b* can be mounted adjacent to the circuit board **72***a* and carry additional components such as audible output device, a piezo electric horn, control circuitry and a power supply which could include a replaceable battery. These respective components would be carried on printed circuit board **72***b* and oriented so as to not impinge upon or alter the ingress and egress of airborne ambient, such as airborne smoke, through openings **66**. As illustrated in FIG. **3**B, ingress and egress of airborne ambient can occur symmetrically relative to housing **62** and impinge upon the sensors **70***a, b* without obstruction from or deflection due to other components in the detector.

It will be understood that the choice of sensors **70***a, b* is exemplary. Other choices such as smoke and gas sensors could also be used without departing from the spirit and scope of the present invention. It will also be understood a variety of mounting arrangements could be implemented with base **62***a* without departing from the spirit and scope of the present invention.

The cover of the sensor may include a myriad of designs since adding vents, holes, etc. will not affect the sensor/sensors behavior in the detection of airborne smoke particulates, gas, etc.

From the foregoing, it will be observed that numerous variations and modifications may be effected without departing from the spirit and scope of the invention. It is to be understood that no limitation with respect to the specific apparatus illustrated herein is intended or should be inferred. It is, of course, intended to cover by the appended claims all such modifications as fall within the scope of the claims.

What is claimed:

1. A surface mountable smoke detector comprising:

a housing which bounds, at least in part, an internal volume and which has a mounting side positionable adjacent a mounting surface;

at least one smoke sensor carried within the housing and located adjacent to the mounting side wherein the housing is open, in part, to provide substantially symmetrical in-flow and out-flow of ambient atmosphere adjacent the mounting surface to and from the sensor.

2. A detector as in claim **1** wherein the sensor is mounted on a center line of the housing without obstruction of ambient inflow and outflow by other components.

3. A detector as in claim **1** which includes a printed circuit board wherein that board has first and second sides with the sensor mounted on one side and including an output transducer mounted on another side.

4. A detector as in claim **1** which includes a printed circuit board wherein that board has first and second sides with the sensor mounted on one side and including control circuitry mounted substantially on another side.

5. A detector as in claim **4** which includes a power supply substantially mounted on the another side.

6. A detector as in claim **5** wherein the power supply includes a replaceable battery.

7. A detector as in claim **1** which includes a second ambient condition sensor.

8. A detector as in claim **7** wherein the second sensor is one of a smoke sensor, a CO sensor, a gas sensor, and a flame sensor.

9. A detector as in claim **7** wherein the sensors are co-located adjacent to the mounting side so as to exhibit substantially no asymmetrical restrictions on in-flow and out-flow of ambient smoke.

10. An ambient condition detector comprising:

a housing which has a base and a cover;

an ambient condition sensor which protrudes from the cover and extends toward the base whereby the housing facilitates a symmetrical inflow of ambient atmosphere into the sensor.

11. A detector as in claim **10** wherein portions of the housing, adjacent to the base, are open to the inflow of ambient atmosphere.

12. A detector as in claim **10** wherein the housing is symmetrical about a centerline and the sensor is located on the centerline.

13. A detector as in claim **10** which includes a support element having first and second mounting surfaces wherein the sensor is mounted on the surface closest to the base.

14. A detector as in claim **13** which includes components mounted on the other surface so as not to block the inflow of ambient atmosphere to the sensor.

15. A detector as in claim 14 wherein the housing is symmetrical about a centerline and the sensor is symmetrically located on the centerline.

16. A detector as in claim 14 wherein the base, relative to the housing, has an exterior mounting surface and an interior surface adjacent to openings in the cover.

17. A detector as in claim 16 wherein the sensor comprises a smoke sensor.

18. A detector as in claim 17 which includes a second sensor selected from a class which includes a fire sensor and a gas sensor.

19. A detector as in claim 17 wherein the housing is substantially cylindrical.

20. A detector comprising:

a housing which defines an internal region wherein the housing has a mounting section with an exterior surface and an interior surface and wherein the housing has at least one region, adjacent to the interior surface, for atmospheric ingress and egress with a substantially planar flow path through the housing adjacent to the interior surface; and

an ambient condition sensor having an atmospheric input/output region wherein the sensor is carried within the housing with the input/output region, at least in part, extending into the planar flow path.

21. A detector as in claim 20 wherein the sensor includes a mounting region, displaced from the input/output region, whereby the sensor is coupled to and carried by the housing.

22. A detector as in claim 21 which includes a support member in the housing wherein the support member has first and second spaced apart surfaces wherein the sensor is coupled to one surface and an audible output device is coupled to another surface wherein the one surface is located between the flow path and the another surface.

23. A detector as in claim 21 which includes a support member in the housing wherein the support member has first and second spaced apart surfaces wherein the mounting region of the sensor is coupled to one surface and an audible output device is coupled to another surface wherein at least one of the surfaces is between the input-output region of the sensor and the audible output device.

24. A detector as in claim 21 which includes a two-sided, mounting element carried in the housing wherein the sensor is mounted on one side with the one side located between the input/output region of the sensor and a second side and wherein control electronics coupled to the sensor is carried, in substantial part on the second side.

25. A detector as in claim 24 wherein the mounting element is planar.

26. An ambient condition detector comprising:

a substantially planar support element for conducting electrical signals wherein the element includes first and second spaced apart mounting surfaces;

a first sensor carried on a first surface of the element; and

an audible output device carried on a second surface of the element which includes a housing which defines a substantially enclosed internal region with a perforated section so as to permit an inflow and outflow of ambient atmosphere wherein the planar support element is carried by the housing in the region oriented with a selected end region of the sensor extending toward the perforated section and with the audible output device extending away from the perforated section.

27. A detector as in claim 26 which includes a second sensor, carried in the housing and oriented to extend a sensing region thereof toward the inflow and outflow of ambient atmosphere.

28. A detector as in claim 26 wherein the perforated section comprises a substantially planar atmospheric flow path through the housing wherein the selected end region of the sensor extends, at least in part, into the flow path.

29. A detector as in claim 28 which includes a second sensor, carried on the planar support element and extending toward the flow path.

30. A surface mountable smoke detector comprising:

a housing which bounds, at least in part, an internal volume and which has a mounting wall;

at least one smoke sensor carried within the housing with a sensing region located adjacent to the mounting wall wherein the housing is open, in part, adjacent to the mounting wall to provide substantially symmetrical in-flow and out-flow of ambient atmosphere to and from the sensing region of the sensor; and

an alarm indicating output transducer carried within the housing displaced from the inflow and outflow.

31. A detector as in clam 30 which includes a printed circuit board wherein that board has first and second sides with the sensor mounted on one side and the output transducer mounted on another side.

32. A detector as in clam 31 which includes a power supply substantially mounted on the another side.

33. A detector as in clam 32 wherein the power supply includes a replaceable battery.

34. A detector as in claim 31 which includes a second ambient condition sensor carried on the printed circuit board.

35. A detector as in claim 31 wherein a planar flow path is provided in the housing between the printed circuit board and the mounting wall.

36. An ambient condition detector comprising:

a base and a cover;

a planar flow path for flow of ambient atmosphere through the cover; an ambient condition sensor which protrudes from the cover and extends toward the base into the flow path.

37. A detector as in claim 36 which includes a support element having first and second mounting surfaces wherein the sensor is mounted on the surface closest to the base.

38. A detector as in claim 37 which includes components mounted on the other surface so as not to block the flow of ambient atmosphere to/from the sensor.

* * * * *