IN THE UNITED STATES DISTRICT COURT
FOR THE NORTHERN DISTRICT OF ILLINOIS
EASTERN DIVISION

WEBER-STEPHEN PRODUCTS LLC, Plaintiff, v. SEARS HOLDINGS CORPORATION, Defendant.	Case No. **JURY TRIAL DEMANDED**

COMPLAINT

Plaintiff Weber-Stephen Products LLC complains of Defendant Sears Holdings Corporation as follows:

NATURE OF CASE

1. This Complaint includes claims for patent infringement arising under the patent laws of the United States, Title 35 of the United States Code. This Complaint also includes claims for unfair competition, false designation of origin and trade dress infringement in violation of Section 43(a) of the Lanham Act, 15 U.S.C. § 1125(a). This Court has jurisdiction over these claims pursuant to 28 U.S.C. § 1331 and § 1338(a) and (b).

PARTIES

2. Weber-Stephen Products LLC ("Weber") is a Delaware limited liability company having its principal place of business at 200 East Daniels Road, Palatine, Illinois 60067.

3. Weber is a leading worldwide designer, developer, manufacturer and provider of outdoor gas, charcoal and electric grills and grilling accessories sold under the Weber® brand name. Weber's founder, George Stephen, began making and selling grills under the Weber® name in the 1950s. Since that time, Weber has developed and introduced numerous revolutionary and iconic products, such as the Genesis® grills. Today, the Weber® brand has

become one of America's most recognized and trusted brands in outdoor grills. As a result of its innovative research and development efforts in the field of outdoor grills, Weber holds numerous design and utility patents.

4. Weber owns and has standing to sue for infringement of United States Patent No. 8,347,874 B2, entitled "Grease Drip Pan and Gas Tank Blocker for a Barbecue Grill," which issued on January 8, 2013 (the "'874 Patent").

5. Weber also owns and has standing to sue for infringement of United States Design Patent No. D564,834 S, entitled "Shroud for a Barbecue Grill," which issued on March 25, 2008 (the "'834 Patent").

6. Weber also owns and has standing to sue for infringement of United States Design Patent No. D609,045 S, entitled "Grill," issued on February 2, 2010 (the "'045 Patent").

7. Sears Holdings Corporation ("Sears") is a Delaware corporation having its principal place of business at 3333 Beverly Road, Hoffman Estates, Illinois 60179.

8. Sears, together with its subsidiaries, owns and operates Kmart and Sears retail stores, as well as the sears.com, kmart.com and kenmore.com websites. Among other things, Sears and its subsidiaries sell outdoor grills and accessories under the Kenmore® brand name.

JURISDICTION AND VENUE

9. The Court has personal jurisdiction over Sears because, among other things, it transacts business in this district at least by offering to sell, selling and/or advertising the accused products in such a way as to purposefully reach out to customers in Illinois and this judicial district through its retail stores located in this district, as well as through its websites, thus specifically committing acts of infringement in this judicial district. Sears is headquartered in this judicial district, has purposefully availed itself of the privilege of conducting business with

residents of this judicial district and has established sufficient minimum contacts with the State of Illinois such that it should reasonably and fairly anticipate being brought into court in Illinois.

10. Venue is proper in this district under 28 U.S.C. §§ 1391(b)-(d) and 1400(b).

COUNT I – INFRINGEMENT OF U.S. PATENT NO. 8,347,874 B2

11. Weber repeats and incorporates by reference the allegations contained in the preceding paragraphs as if set forth fully herein.

12. Sears offers to sell and sells a line of products called Kenmore Elite Gas Grills.

13. Sears offers to sell and sells the Kenmore Elite 3 Burner Dual Fuel Stainless Steel Gas Grill, Item # 07123675000 (the "Kenmore Elite Stainless Grill").

14. Sears offers to sell and sells the Kenmore Elite 3 Burner Dual Fuel Espresso Gas Grill, Item # 07123674000 (the "Kenmore Elite Espresso Grill").

15. Sears offers to sell and sells propane fuel tanks for use with the Kenmore Elite Stainless and Espresso Grills.

16. The Kenmore Elite Stainless and Espresso Grills (collectively, the "Accused Products") are barbeque grills.

17. The Accused Products have cooking chambers.

18. The Accused Products have frames or carts.

19. The Accused Products' frames or carts have an interior volume large enough to store two (2) twenty (20) pound standard propane fuel tanks.

20. The Accused Products have a tank blocking structure.

21. The Accused Products have a grease cup bracket.

22. The Accused Products' grease cup bracket prevents storage of two (2) twenty (20) pound standard propane fuel tanks in the interior volume of the frame or cart.

23. The Accused Products' grease cup bracket holds a grease drip pan or grease cup which collects grease from the cooking chamber or grill head.

24. The Accused Products' tank blocking structure or grease cup bracket is not suspended from the cooking chamber or grill head.

25. Sears has infringed and continues to infringe at least claim 1 of the '874 Patent within the meaning of 35 U.S.C. § 271(a) through the foregoing activities including, without limitation, selling and offering to sell the Kenmore Elite Gas Grills line of products including, without limitation, the Accused Products, and other grills with different model names or numbers but with the same or substantially the same designs, features and functionalities as the Accused Products.

26. Weber has complied with notice provisions of 35 U.S.C. § 287.

27. Upon information and belief, Sears has been aware of the '874 Patent and its infringement thereof, yet has continued its unlicensed and unauthorized infringement with no regard to the '874 Patent or Weber's rights. This infringement continues today despite an objectively high likelihood that Sears' actions constitute infringement of the '874 Patent. This objectively high likelihood of infringement was either known or so obvious that it should have been known to Sears. To date, Sears has not presented any competent advice of counsel upon which it has relied; nor has it presented any reasonable defense of non-infringement, invalidity or unenforceability. Sears' infringement of the '874 Patent has been willful, deliberate and objectively reckless.

28. Sears' infringement of the '874 Patent by selling and offering to sell the Accused Products has injured Weber and Weber is entitled to recover damages adequate to compensate it for such infringement, but in no event less than a reasonable royalty.

29. Sears' infringing activities have injured and will continue to injure Weber, unless and until this Court enters an injunction prohibiting further infringement and, specifically, enjoining further manufacture, use, sale, offer for sale and/or importation of products that come within the scope of the claims of the '874 Patent.

COUNT II – INFRINGEMENT OF U.S. DESIGN PATENT NO. D564,834 S

30. Weber repeats and incorporates by reference the allegations contained in the preceding paragraphs as if set forth fully herein.

31. The '834 Patent claims an "ornamental design for a shroud for a barbeque grill."

32. The Accused Products have a shroud or lid.

33. Figure 1 of the '834 Patent is shown on the left below, and the shroud or lid of the Accused Products is shown on the right below, as depicted in the parts diagram of the Kenmore Elite Use & Care Guide, Models 146.2367 4310/146.23675310, p. 15.

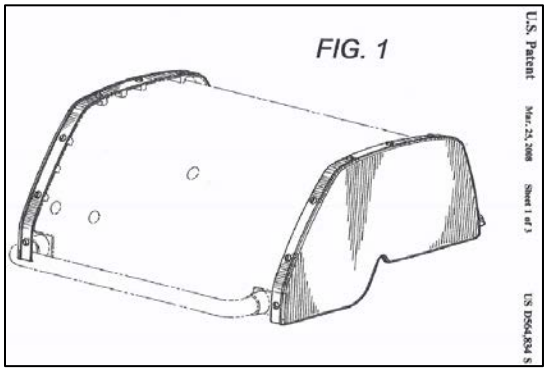

Figure 1 of '834 Patent

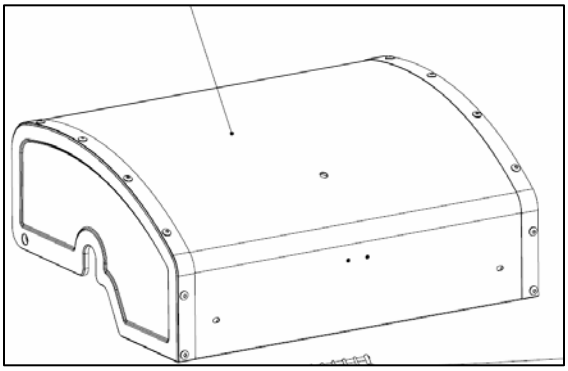

Kenmore Elite Stainless and Espresso Grills

34. The Accused Products' shroud or lid design has appropriated the ornamental design for a shroud for a barbeque grill as shown and described in the '834 Patent.

35. In the eye of the ordinary observer, giving such attention as a purchaser usually gives, the ornamental design for a shroud for a barbeque grill claimed in the '834 Patent and the

Accused Products' shroud or lid design are substantially the same; the resemblance is such as to deceive an ordinary observer, inducing him to purchase one supposing it to be the other.

36. Sears has infringed and continues to infringe the ornamental design for a shroud for a barbeque grill claimed in the '834 Patent within the meaning of 35 U.S.C. § 271(a) through the foregoing activities including, without limitation, selling and offering to sell the Kenmore Elite Gas Grills line of products including, without limitation, the Accused Products, and other grills with different model names or numbers but with the same or substantially the same shroud or lid designs as the Accused Products.

37. Weber has complied with notice provisions of 35 U.S.C. § 287.

38. Upon information and belief, Sears has been aware of the '834 Patent and its infringement thereof, yet has continued its unlicensed and unauthorized infringement with no regard to the '834 Patent or Weber's rights. This infringement continues today despite an objectively high likelihood that Sears' actions constitute infringement of the '834 Patent. This objectively high likelihood of infringement was either known or so obvious that it should have been known to Sears. To date, Sears has not presented any competent advice of counsel upon which it has relied; nor has it presented any reasonable defense of non-infringement, invalidity or unenforceability. Sears' infringement of the '834 Patent has been willful, deliberate and objectively reckless.

39. Sears' infringement of the '834 Patent by selling and offering to sell the Accused Products has injured Weber and Weber is entitled to recover damages adequate to compensate it for such infringement, but in no event less than a reasonable royalty, as permitted under 35 U.S.C. § 284, as well as damages for design patent infringement as permitted under 35 U.S.C. § 289.

40. Sears' infringing activities have injured and will continue to injure Weber, unless and until this Court enters an injunction prohibiting further infringement and, specifically, enjoining further manufacture, use, sale, offer for sale and/or importation of products that come within the scope of the design claimed in the '834 Patent.

COUNT III – INFRINGEMENT OF U.S. DESIGN PATENT NO. D609,045 S

41. Weber repeats and incorporates by reference the allegations contained in the preceding paragraphs as if set forth fully herein.

42. The '045 Patent claims an "ornamental design for grill."

43. The Accused Products are grills.

44. Figure 2 of the '045 Patent is shown on the far left below, and the Accused Products are shown on the right below, as depicted on Sears' www.kenmore.com website. See *http://www.kenmore.com/outdoors-grills-smokers-gas-grills/s-1040208?adCell=W2&adCell=W2#viewItems=12&pageNum=1&sortOption=ORIGINAL_SORT_ORDER&&filter=Brand|Kenmore+Elite&lastFilter=Brand*, and related URLs.

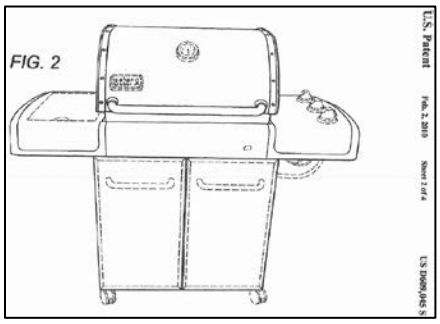





Figure 2 of '045 Patent **Kenmore Elite Stainless and Espresso Grills**

45. The Accused Products' design has appropriated the ornamental design for a grill as shown and described in the '045 Patent.

46. In the eye of the ordinary observer, giving such attention as a purchaser usually gives, the ornamental design for a grill claimed in the '045 Patent and the Accused Products'

design are substantially the same; the resemblance is such as to deceive an ordinary observer, inducing him to purchase one supposing it to be the other.

47. Sears has infringed and continues to infringe the ornamental design for a grill claimed in the '045 Patent within the meaning of 35 U.S.C. § 271(a) through the foregoing activities including, without limitation, selling and offering to sell the Kenmore Elite Gas Grills line of products including, without limitation, the Accused Products, and other grills with different model names or numbers but with the same or substantially the same designs as the Accused Products.

48. Weber has complied with notice provisions of 35 U.S.C. § 287.

49. Upon information and belief, Sears has been aware of the '045 Patent and its infringement thereof, yet has continued its unlicensed and unauthorized infringement with no regard to the '045 Patent or Weber's rights. This infringement continues today despite an objectively high likelihood that Sears' actions constitute infringement of the '045 Patent. This objectively high likelihood of infringement was either known or so obvious that it should have been known to Sears. To date, Sears has not presented any competent advice of counsel upon which it has relied; nor has it presented any reasonable defense of non-infringement, invalidity or unenforceability. Sears' infringement of the '045 Patent has been willful, deliberate and objectively reckless.

50. Sears' infringement of the '045 Patent by selling and offering to sell the Accused Products has injured Weber and Weber is entitled to recover damages adequate to compensate it for such infringement, but in no event less than a reasonable royalty, as permitted under 35 U.S.C. § 284, as well as damages for design patent infringement as permitted under 35 U.S.C. § 289.

51. Sears' infringing activities have injured and will continue to injure Weber, unless and until this Court enters an injunction prohibiting further infringement and, specifically, enjoining further manufacture, use, sale, offer for sale and/or importation of products that come within the scope of the design claimed in the '045 Patent.

COUNT IV - UNFAIR COMPETITION AND FALSE DESIGNATION OF ORIGIN

52. Weber repeats and incorporates by reference the allegations contained in the preceding paragraphs as if set forth fully herein.

53. This Court has jurisdiction over the subject matter of this claim for unfair competition and false designation of origin arising under Section 43(a) of the Lanham Act, codified in 15 U.S.C. § 1125(a).

54. Sears is fully aware of the popularity of the Weber Genesis® gas grills and the clear association of the Genesis® grill design with that line of products. The Weber Genesis® grill design obtained secondary meaning well prior to Sears' introduction of the Accused Products. Sears intentionally copied and offered in interstate commerce gas grill products that create the same overall visual effect and appearance as the family of grills in Weber's Genesis® line. Sears' Accused Products were designed to have the same distinctive overall appearance and look as the Weber Genesis® products and are confusingly similar in total image, appearance and overall aesthetic look. As a result, the public is, and is likely to be, confused.

55. A side-by-side comparison of the Genesis® grill design and the Sears Accused Products is shown below:



Weber Genesis® S310



Kenmore Elite Stainless Grill



Weber Genesis® S330



Kenmore Elite Espresso Grill

56. Sears has used in commerce, and continues to use in commerce, the Weber Genesis® grill design to unfairly benefit from Weber's success by selling the Accused Products bearing the same design in this jurisdiction and throughout the United States.

57. Sears could have selected an alternative aesthetic design and achieved the same functionality as its current Accused Products.

58. The Weber Genesis® grill design is non-functional.

59. Sears has used Weber's Genesis® grill design on its Accused Products with the express intent to pass off Sears' Accused Products as those of Weber and to cause confusion and mislead the purchasing public into believing that Sears' Accused Products are authorized,

sponsored, affiliated with, or associated with Weber, and to trade upon Weber's reputation for high-quality grill products and to improperly appropriate Weber's valuable trade dress rights.

60. Sales of Sears' Accused Products are likely to cause consumer confusion because of the similarity in appearance and look between Sears' and Weber's products. Consumers will believe that the Sears' Accused Products are either manufactured, licensed, affiliated with or sponsored by Weber or are being placed on the market with Weber's consent and/or actual or implied authority. As a result, Weber has been and will continue to be irreparably injured by Sears' improper acts.

61. Sears has willfully, deliberately, and with predatory intent, created such confusion by copying and reproducing the distinctive and unique design and overall product appearance of Weber's Genesis® grills; and has advertised and sold, and threatens to advertise and sell, its products so as to cause public confusion and deception for a substantial portion of the people who perceive the advertisements, which confusion and deception is likely to influence purchase decisions. Further, Sears' sales and offers for sale of its Accused Products have caused and threaten to cause Weber the loss of its valuable goodwill and reputation for making and selling distinctive, unique and high-quality grill products under the Genesis® design.

62. Sears' aforesaid acts constitute unfair competition and the use in commerce of false designations of origin and false and/or misleading descriptions or representations, tending to falsely or misleadingly describe and/or represent Sears' Accused Products as those of Weber in violation of section 43(a) of the Lanham Act, 15 U.S.C. § 1125(a).

63. Sears' wrongful acts will continue unless enjoined by this Court.

64. Weber has no adequate remedy at law and is suffering irreparable harm and damage as a result of the aforesaid acts of Sears in an amount to be determined at trial.

COUNT IV - FEDERAL TRADE DRESS INFRINGEMENT

65. Weber repeats and incorporates by reference the allegations contained in the preceding paragraphs as if set forth fully herein.

66. This Court has jurisdiction over the subject matter of this claim for trade dress infringement arising under section 43(a) of the Lanham Act, codified in 15 U.S.C. § 1125(a).

67. This claim is for trade dress infringement of Weber's product design and configuration for its Genesis® line of gas grills. The Weber Genesis® grill design obtained secondary meaning well prior to Sears' introduction of its Accused Products.

68. Weber has expended considerable time, effort and resources to design and develop unique and inherently distinctive appearances for its Genesis® grill products including, without limitation, their distinctive shape, proportions and feature placements, such as their shroud riveted band design and door trim design. See, e.g., paragraph 55, incorporated herein by reference. The Genesis® grill design has been featured prominently in Weber's in-store, on-site and other advertisements and promotions for its gas grill product line. This unique trade dress has become associated with the success of Weber's Genesis® grill products and has become an indication of a single, high-quality source for those products in the minds of the relevant purchasing public.

69. Sears' selection and use of substantially similar looks and appearances for its Accused Products is likely to mislead and confuse the public as to the source, sponsorship and/or affiliation of Sears' Accused Products. Because of the nearly-identical look of Sears' Accused Products to Weber's non-functional trade dress associated with Weber's Genesis® grill products, the public is likely to believe that Sears' Accused Products are in some way affiliated or associated with, or sponsored by Weber.

70. Sears' actions have been and are willful and deliberate.

71. Sears' wrongful acts will continue unless enjoined by this Court.

72. Weber has suffered, and will continue to suffer, substantial and irreparable harm and damage as a result of Sears' infringement of Weber's Genesis® grill trade dress, in an amount to be determined at trial.

PRAYER FOR RELIEF

WHEREFORE, Weber respectfully asks this Court to enter judgment against Sears, and against its subsidiaries, successors, parents, affiliates, officers, directors, agents, servants and employees, and all persons in active concert or participation with them, granting the following relief:

Counts I-III – Patent Infringement Claims

A. That judgment be entered in favor of Weber and against Sears on each claim made in the Complaint;

B. An award of damages adequate to compensate Weber for the infringement that has occurred, but in no event less than a reasonable royalty as permitted by 35 U.S.C. § 284, together with prejudgment interest from the date the infringement began;

C. Additional damages for design patent infringement as permitted under 35 U.S.C. § 289;

D. Increased damages as permitted under 35 U.S.C. § 284;

E. A finding that this case is exceptional and an award to Weber of its reasonable attorneys' fees and costs as provided by 35 U.S.C. § 285;

F. A preliminary and permanent injunction prohibiting Sears from infringing the patents in suit; and

G. Such other relief to which Weber is entitled under law, and any other and further relief that this Court or a jury may deem just and proper.

Counts IV-V – Lanham Act Claims

H. That judgment be entered in favor of Weber and against Sears on each claim made in the Complaint;

I. That the Court order that Sears be immediately and permanently enjoined from:

(1) using the Weber Genesis® trade dress rights or designs confusingly similar thereto;

(2) advertising (over the Internet, through catalogs, or otherwise), selling, importing, exporting, using, accepting orders for or offering to sell products in conjunction with, or under, the Genesis® grill design and appearance, including but not limited to the Sears Accused Products;

(3) engaging in any conduct that tends falsely to represent that, or is likely to confuse, mislead, or deceive purchasers, Sears' customers, and/or members of the public to believe that, the actions of Sears, the products sold by Sears, or Sears itself is connected with Weber, is sponsored, approved, or licensed by Weber, or is in some way connected or affiliated with Weber;

(4) otherwise competing unfairly with Weber in any manner;

J. That Weber be awarded damages in an amount sufficient to compensate it for the injuries it has sustained by reason of Sears' unlawful acts, including Weber's loss of goodwill, loss of past and/or future sales, and damages caused by Sears' acts of trade dress infringement and unfair competition. That Weber be awarded increased damages based upon the intentional and willful nature of Sears' conduct

of the kind complained of herein. That Weber be awarded all gains, profits and advantages received by Sears from the sale of the Accused Products and any other products that infringe upon Weber's trade dress rights;

K. That Weber be awarded all additional remedies provided for in 15 U.S.C. § 1117;

L. That Sears be ordered to (a) send to its customers and the general public corrective statements approved by Weber, correcting all false statements made and all misrepresentations made concerning the Weber Genesis® design; (b) disclaim any association between Sears and Weber and/or Weber's products; and, (c) recall and make reasonable efforts to obtain the return of any confusingly similar products from its customers; and

M. That the Court provide Weber with such other and further relief as it deems just and proper, or that Weber may be entitled to under the law, including but not limited to attorneys' fees, costs and interest.

JURY DEMAND

Weber demands a trial by jury on all issues presented in this Complaint.

Respectfully submitted,

/s/ Raymond P. Niro, Jr.

Raymond P. Niro
Raymond P. Niro, Jr.
Brian E. Haan
NIRO, HALLER & NIRO
181 W. Madison, Suite 4600
Chicago, IL 60602
(312) 236-0733
Fax: (312) 236-3137
RNiro@nshn.com; RNiroJr@nshn.com;
BHaan@nshn.com

Attorneys for Plaintiff Weber-Stephen Products LLC