E-FILED
Wednesday, 21 December, 2005 12:22:09 PM
Clerk, U.S. District Court, ILCD

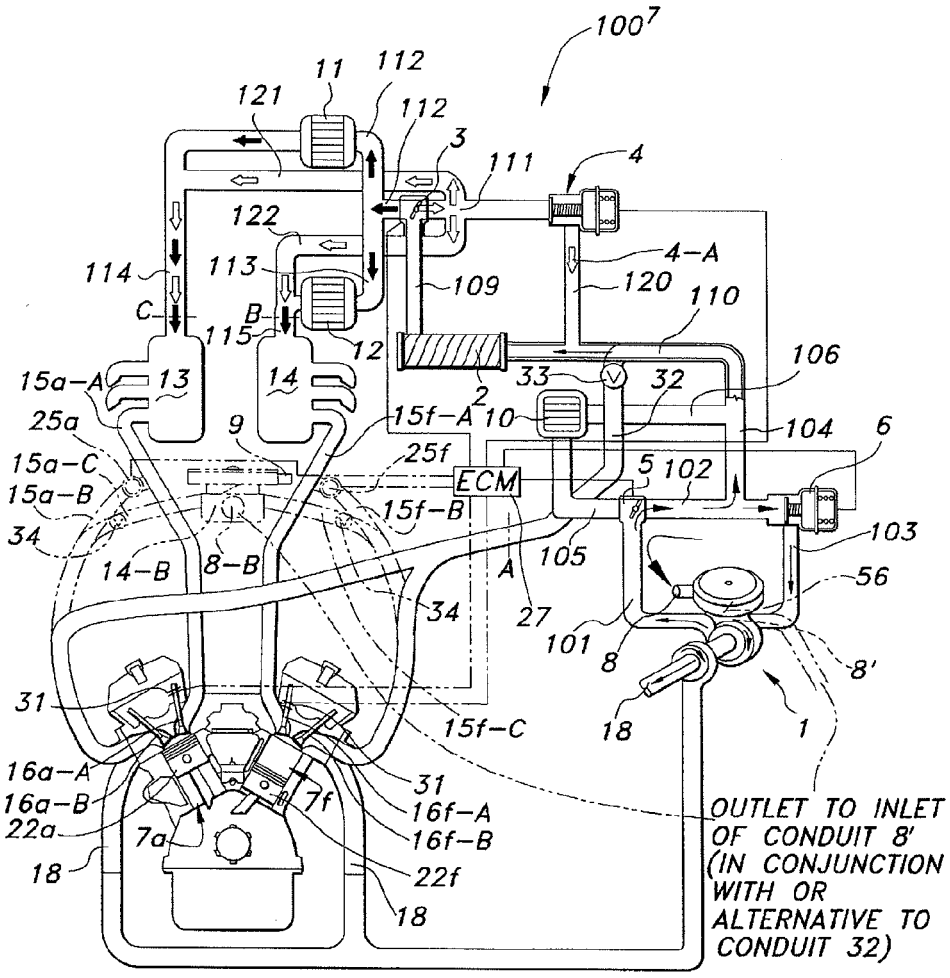

FIG 7

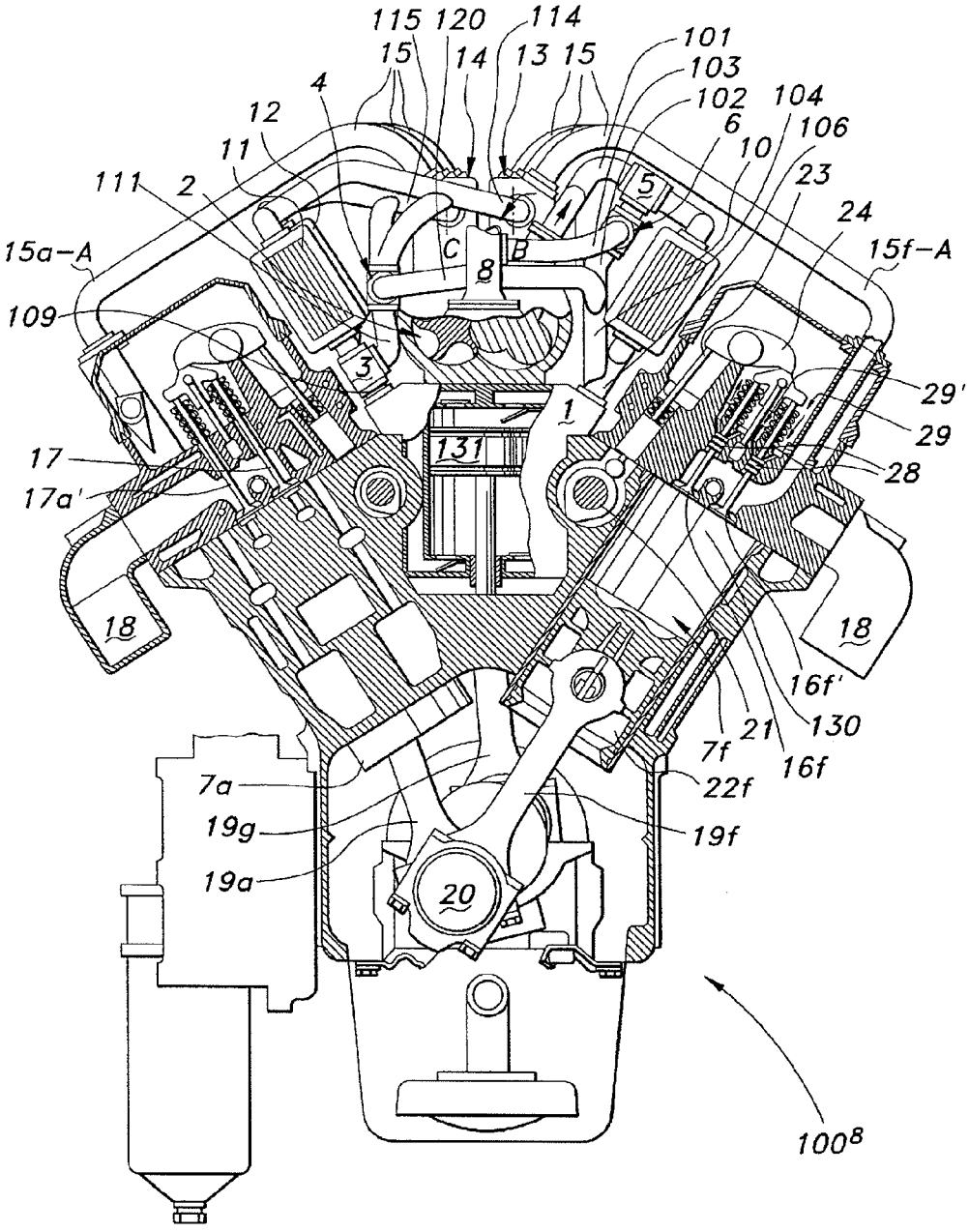
115
120
114
15
14
13
15
101
103
102
104
106
6
10
23
24
15f-A
4
12
11
111
2
5
C
B
8
15a-A
109
3
1
131
29'
29
28
17
17a'
18
18
16f'
130
21
7f
16f
22f
7a
19g
19f
19a
20
100^8

FIG 8

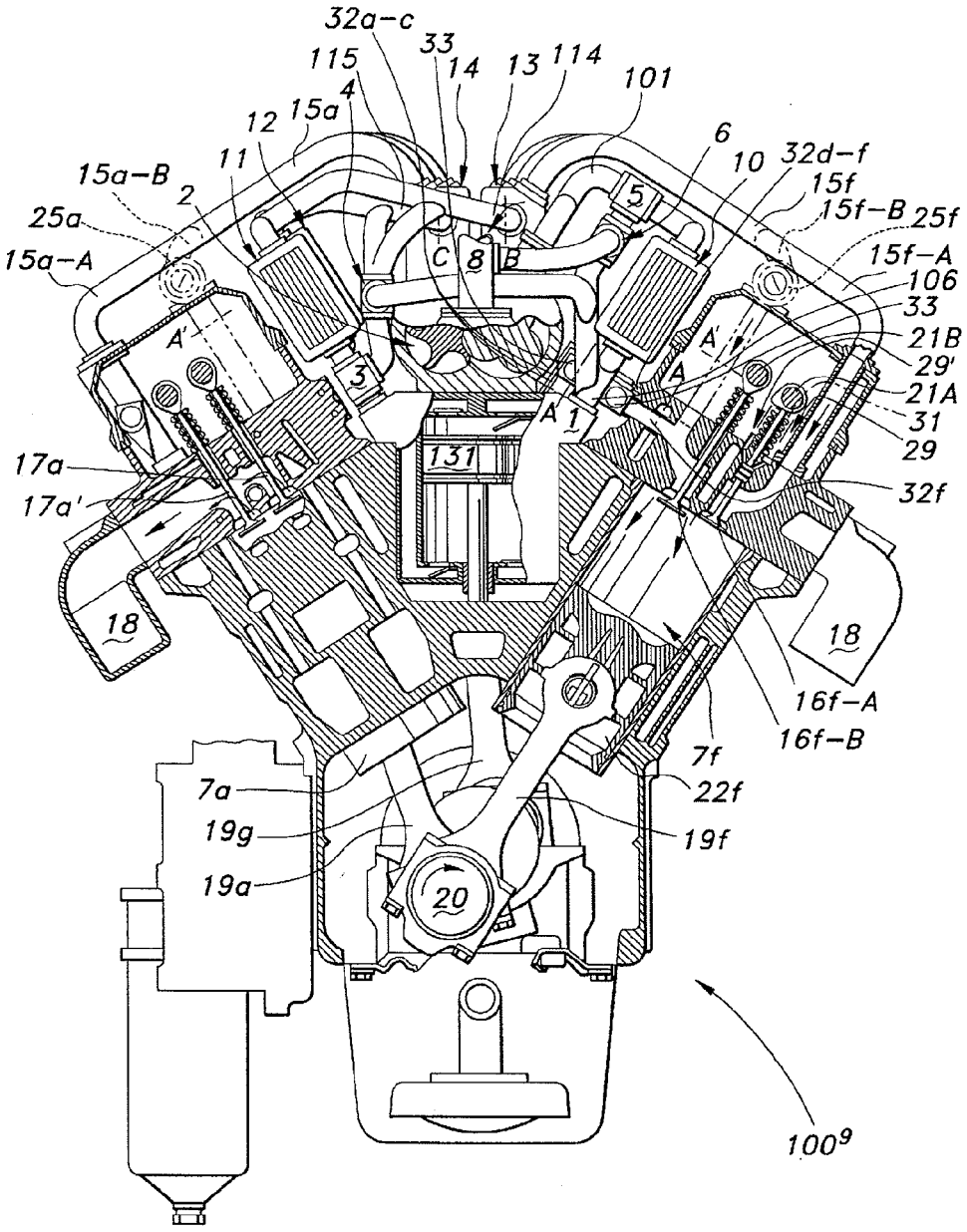
32a–c
33
115
14
13
114
101
4
15a
12
11
6
10
32d–f
15f
15f–B
25f
15a–B
2
25a
15a–A
5
C
8
B
15f–A
106
33
21B
29'
21A
31
29
32f
A
A'
3
1
131
17a
17a'
18
18
16f–A
16f–B
7f
22f
19f
7a
19g
19a
20
100

FIG 9

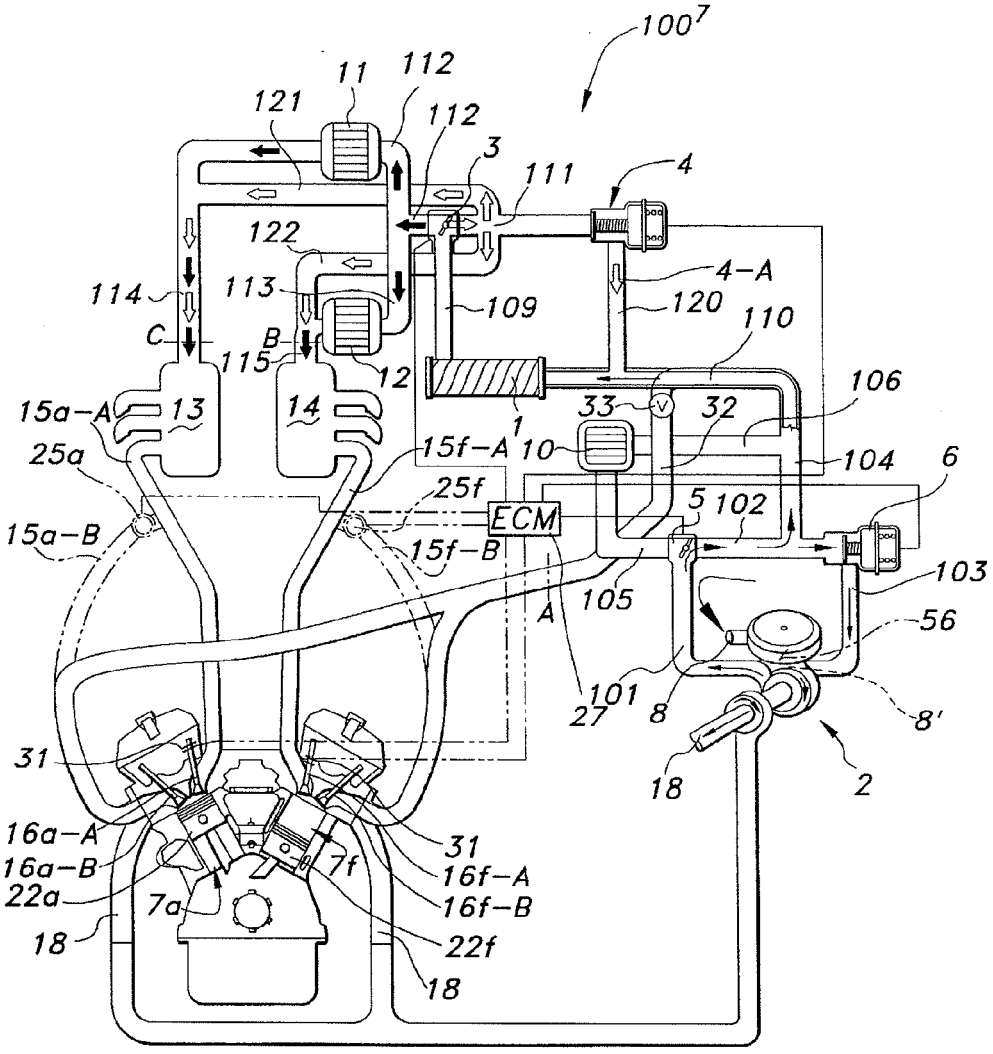
100
11
112
121
112
3
111
4
122
4-A
114
113
109
120
110
C
B
115
12
106
15a-A
13
14
33
32
1
15f-A
10
104
6
25a
25f
5
102
15a-B
ECM
15f-B
103
105
A
56
101
27
8
8'
31
18
2
16a-A
31
16a-B
7f
16f-A
22a
7a
16f-B
18
22f
18

FIG 9B

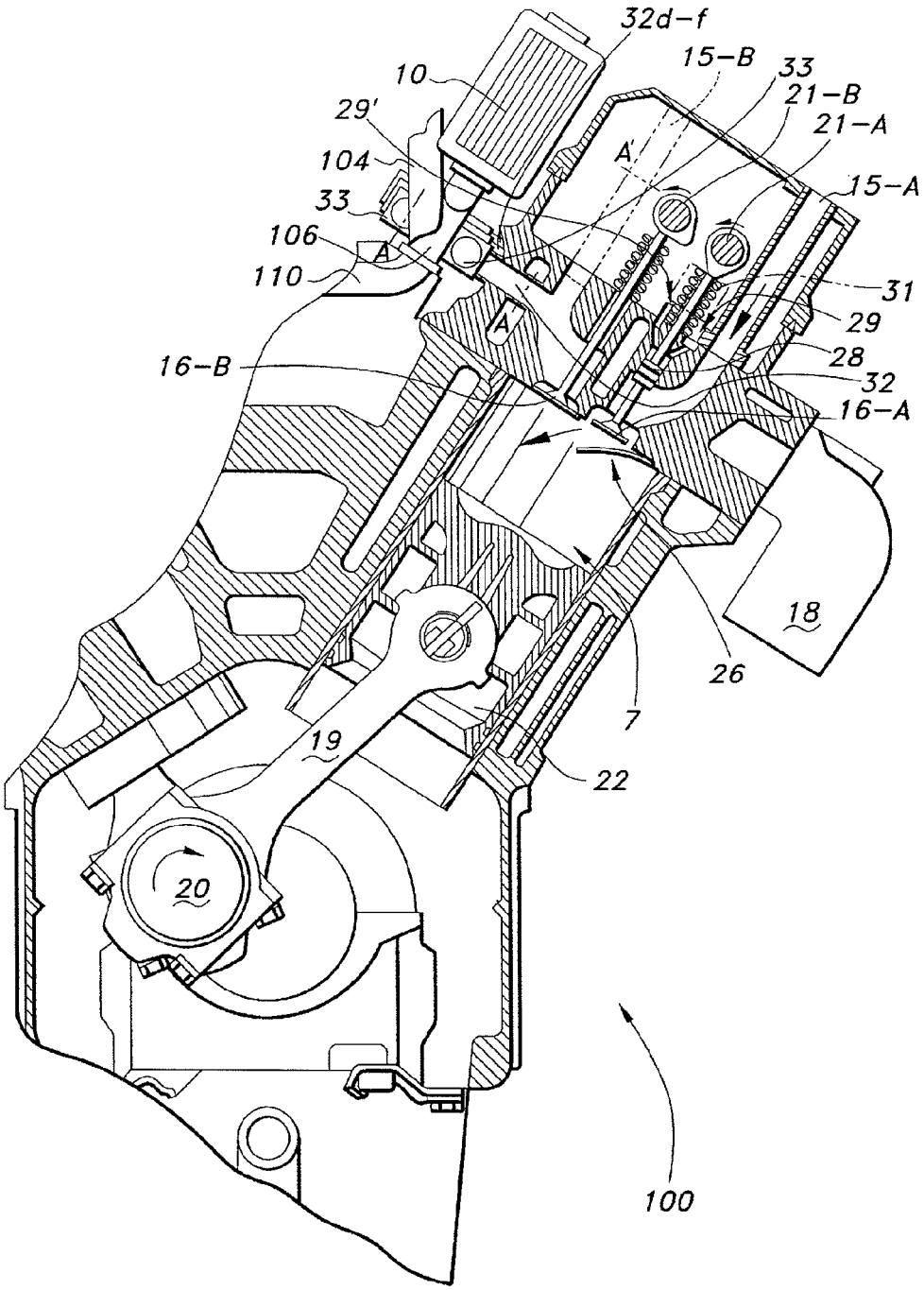
32d–f
15–B
33
21–B
21–A
15–A
10
29'
104
33
106
110
A
A'
31
29
28
32
16–A
16–B
18
26
7
19
22
20
100

FIG 10

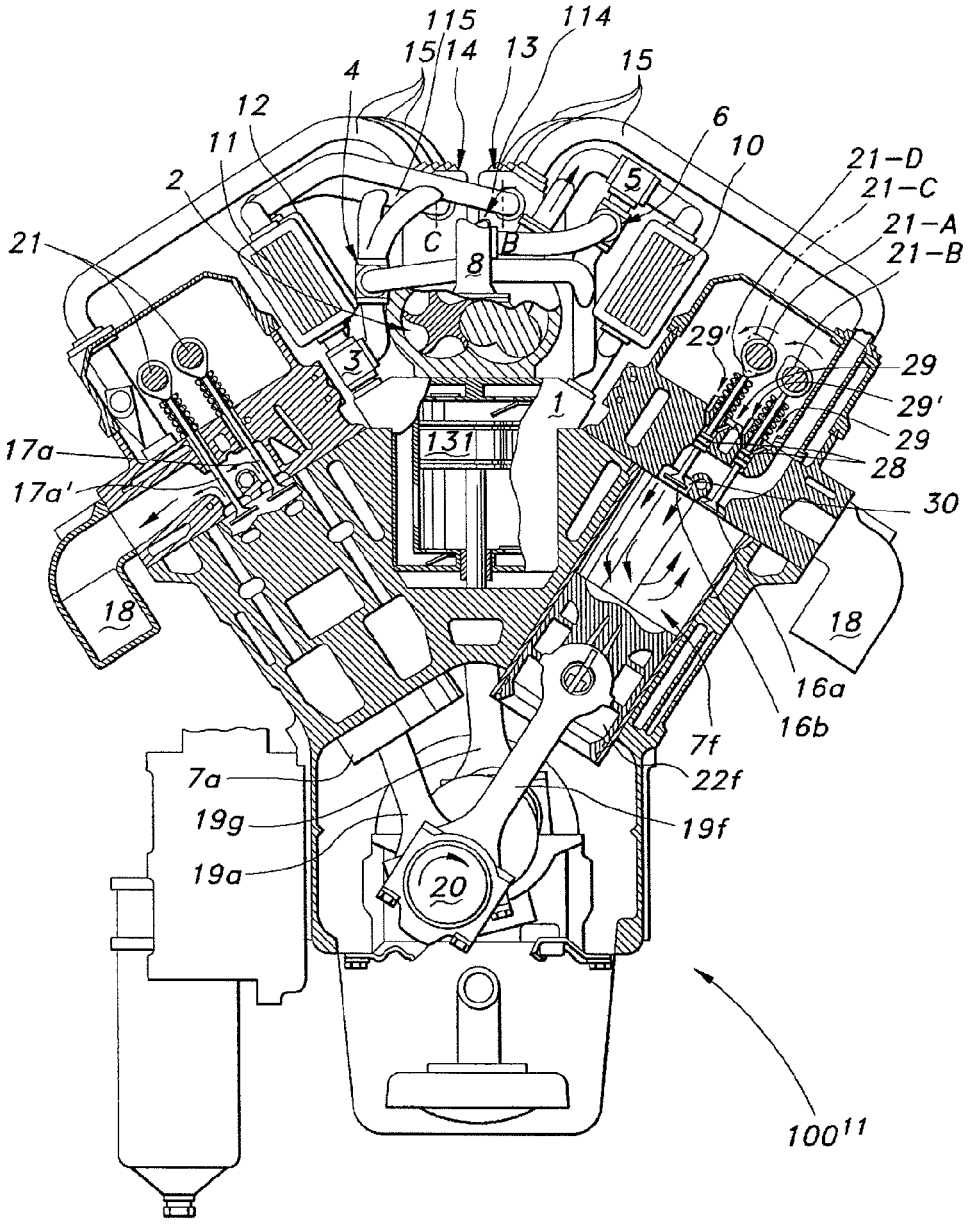
115
15
14
13
114
15
4
12
11
2
6
10
21-D
21-C
21-A
21-B
21
C
B
8
5
3
1
29'
29
29'
29
28
30
131
17a
17a'
18
18
16a
16b
7f
22f
19f
7a
19g
19a
20
100
11

FIG 11

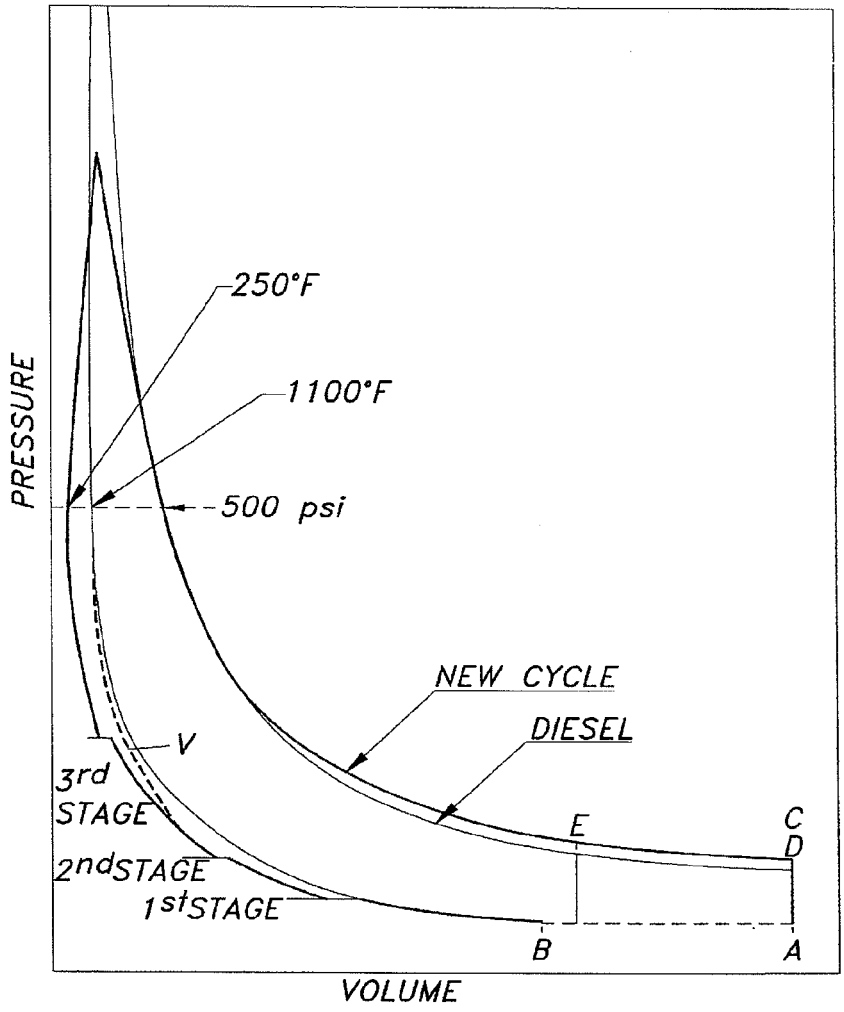

A – COMPRESSION BEGINS IN 2–STROKE AND 4–STROKE DIESEL CYCLE ENGINE
B – COMPRESSION BEGINS IN 2–STROKE AND 4–STROKE NEW CYCLE ENGINE
C – EXPANSION ENDS IN 4–STROKE DIESEL CYCLE ENGINE
D – EXPANSION ENDS IN 2–STROKE AND 4–STROKE NEW CYCLE ENGINE
E – EXPANSION ENDS (AT EXHAUST BLOW–DOWN) IN 2–STROKE DIESEL CYCLE ENGINE
V – SEE NOTE 1 IN DESCRIPTION

FIG 12

COMPARISON OF OPERATING PARAMETERS OF A HEAVY DUTY TWO-STROKE DIESEL ENGINE (A) WITH THE ENGINE OF THIS INVENTION (B)

ENGINE	COMPRESSION RATIO OR NOMINAL COMPRESSION RATIO	EFFECTIVE COMP RATIO	COMPRESSION PRESSURE (PSI)	TEMP @ END COMP (DEG F.)	TEMP @ END COMB (DEG F.)	CHARGE DENSITY (LB./CU. FT.)	EXPANSION RATIO	E. R. / C. R.	CHARGE WEIGHT PER REVOLUTION (GRAMS)
A	19:1	19:1	907	1300	3400	1.45	*10:1	0.5	2.06
B(ic)	13:1	2:1	533	250	3000	2.03	**19:1	1.5	2.86
B(bp)	13:1	13:1	533	992	^3100	1.01	**19:1	1.5	1.43
B2(ic)	10:1	2:1	369	250	^2800	1.40	**19:1	1.9	1.98
B2(bp)	10:1	10:1	369	871	^2900	0.75	**19:1	1.9	1.06

* Exhaust valve opens midstroke
** Exhaust valve opens near BDC
(ic) Air charge intercooled except for last stage of compression
(bp) Intercoolers bypassed
^ Estimated

$$\frac{\text{E. R.}}{\text{C. R.}} = \frac{\text{EXPANSION RATIO}}{\text{COMPRESSION RATIO}}$$

FIG 13

COMPARISON OF OPERATING PARAMETERS OF A HEAVY DUTY FOUR-STROKE DIESEL ENGINE (A) WITH THE ENGINE OF THIS INVENTION (B)

ENGINE	COMPRESSION RATIO OR NOMINAL COMPRESSION RATIO	EFFECTIVE COMP RATIO	COMPRESSION PRESSURE (PSI)	TEMP @ END COMP (DEG F.)	TEMP @ END COMB (DEG F.)	CHARGE DENSITY (LB./CU. FT.)	EXPANSION RATIO	E. R. / C. R.	CHARGE WEIGHT PER REVOLUTION (GRAMS)
A	19:1	19:1	907	1300	3400	1.45	19:1	1.0	*1.03
B(ic)	13:1	2:1	533	250	3000	2.03	19:1	1.5	**2.86
B(bp)	13:1	13:1	533	992	^3100	1.01	19:1	1.5	**1.43
B2(ic)	10:1	2:1	369	250	^2800	1.40	19:1	1.9	**1.98
B2(bp)	10:1	10:1	369	871	^2900	0.75	19:1	1.9	**1.06

* Per revolution, not per firing stroke
** Per revolution and per firing stroke
(ic) Air charge intercooled except for last stage of compression
(bp) Intrecoolers bypassed
^ Estimated

$$\frac{\text{E. R.}}{\text{C. R.}} = \frac{\text{EXPANSION RATIO}}{\text{COMPRESSION RATIO}}$$

FIG 14

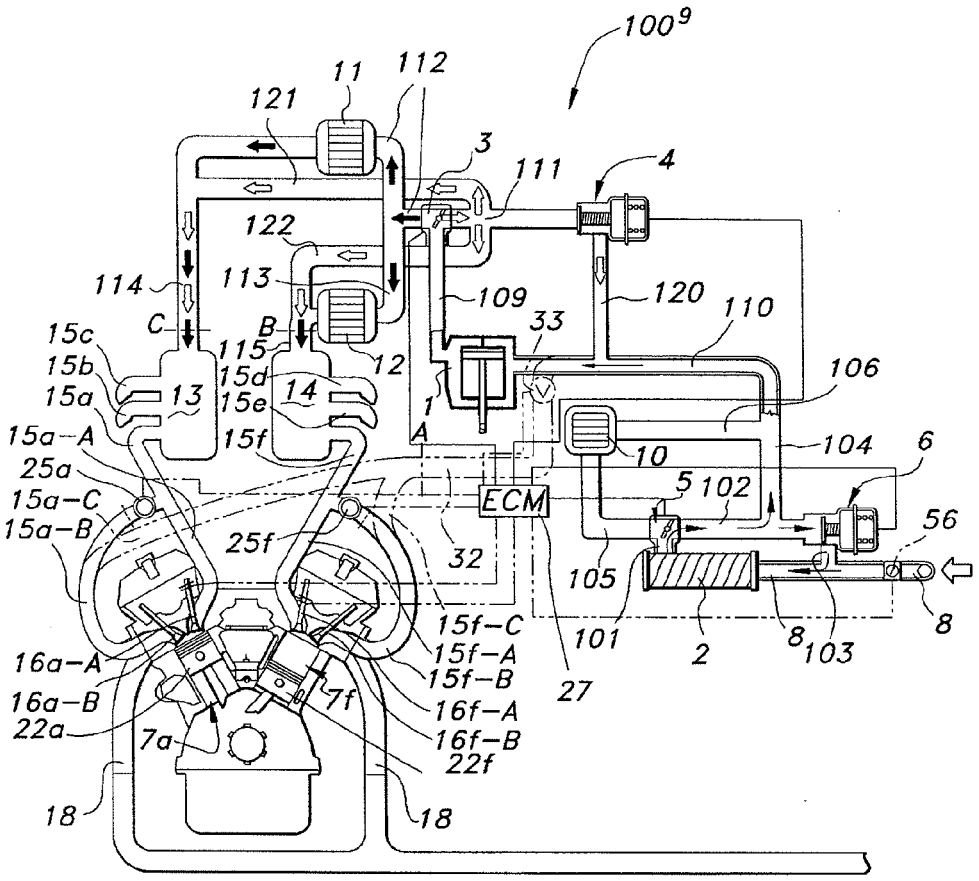
100
9
11
112
121
3
111
4
122
114
113
109
120
110
C
B
33
15c
15b
15a
115
15d
15e
12
13
14
1
A
106
15a-A
15f
10
104
6
25a
15a-C
15a-B
5
102
ECM
56
25f
32
105
15f-C
15f-A
15f-B
101
2
8
103
8
16a-A
16a-B
22a
7f
16f-A
16f-B
22f
27
7a
18
18

FIG 15