E-FILED
Thursday, 09 February, 2006 05:13:44 PM
Clerk, U.S. District Court, ILCD

UNITED STATES DISTRICT COURT
FOR THE CENTRAL DISTRICT OF ILLINOIS

CATERPILLAR INC. Plaintiff, v. ENTEC ENGINE CORPORATION, a corporation; and CLYDE C. BRYANT, an individual, Defendants.	Civil Action File No. 1:05-cvp01394-MMM-JAG

CATERPILLAR'S OPPOSITION TO DEFENDANTS' MOTION TO DISMISS

INTRODUCTION....1

I. CATERPILLAR HAD A REASONABLE APPREHENSION OF SUIT....2

A. Entec's Infringement Letters Demonstrate its Belief that Caterpillar Infringed Entec's Patents and Applications....3

B. Entec's Initiation of the *Inter-Partes* Reexamination Showed That It Was Ready and Willing to Litigate With Caterpillar....4

II. ENTEC'S FOCUS SOLELY ON THE CORRESPONDENCE WITH CATERPILLAR IS INCONSISTENT WITH THE "TOTALITY OF CIRCUMSTANCES" TEST....6

A. Entec's Adversarial Proceeding in the PTO Is Relevant to Caterpillar's Reasonable Apprehension of Suit....6

B. The Parties' Failure to Reach Agreement In Their Settlement Negotiations Is Relevant And Admissible....7

1. It Is Irrelevant That Caterpillar, Rather Than Entec, Terminated the Negotiations....7

2. Settlement Negotiations Were Terminated *Before* Caterpillar Filed This Action....8

3. The Parties' Pre-Negotiation Agreement Does Not Preclude the Court From Knowing About – and Considering – the Fact That the Settlement Negotiations Were Terminated....8

C. Entec's Efforts to Neutralize Its Accusatory Letters to Caterpillar Are Unavailing....9

1. Entec's Letters Need Not Contain Express Threats of Litigation to Show that Entec Believed Caterpillar Infringes....9

2. The Passage of Time Between Entec's Infringement Letters and the Filing of This Action Does Not Diminish the Letters' Contribution to Caterpillar's Apprehension....10

III. ENTEC'S LIMITED COVENANT NOT TO SUE DOES NOT VITIATE CATERPILLAR'S REASONABLE ANTICIPATION OF SUIT....11

IV. THERE IS NO BASIS FOR THIS COURT TO EXERCISE ITS DISCRETION AND DECLINE TO HEAR THIS LAWSUIT....14

CONCLUSION....16

INTRODUCTION

Defendants Entec Engine Corporation and Clyde C. Bryant (collectively "Entec") ask this Court to find that there is "no actual controversy" between them and Caterpillar because *after* this lawsuit was filed, they crafted a "Covenant Not to Sue" that, they now argue, "conclusively establishes" that there is no basis for Caterpillar to anticipate a lawsuit of any kind. Motion at 15. But the Covenant is so heavily qualified and has so many obvious loopholes that, far from vitiating Caterpillar's reasonable fears of a lawsuit, it *confirms* them. In effect, Entec covenants only that it will not sue Caterpillar on *some of its claims,* preserving Entec's ability to file a lawsuit against Caterpillar at any time on the claims it carefully carved out of the covenant.

Beyond the ineffective Covenant, Entec's Motion is premised on misstatements of both law and fact. For example, Entec insists that Caterpillar could not reasonably anticipate a lawsuit because Entec never expressly threatened to sue. But the Federal Circuit has held that an explicit threat of litigation is not necessary to create a reasonable apprehension of litigation; an assertion of infringement—like Entec's here—is sufficient. Entec further argues that an agreement between the parties precluded Caterpillar from advising the Court of the termination of the December 2005 settlement negotiations or relying on the termination as one of the facts supporting its reasonable apprehension of suit. In fact, the parties' agreement did no such thing. And Entec argues repeatedly that, in any event, the termination of the negotiations could not have contributed to Caterpillar's reasonable apprehension because the complaint was filed before the negotiations were terminated. Again, Entec is wrong. In fact, Caterpillar terminated the negotiations *before* the complaint was filed.

As shown below, the totality of the circumstances here establishes that Caterpillar did reasonably anticipate a lawsuit. Entec persistently accused Caterpillar of using its patented

technology; indeed, it went further and suggested Caterpillar was engaged in a "cover up" of its use of Entec's technology. Entec moved beyond written accusations in late 2004, when it confronted Caterpillar head-on in an adversarial *inter-partes* reexamination proceeding before the United States Patent and Trademark Office ("PTO"). In that proceeding, Entec attacked the PTO's issuance of two of Caterpillar's ACERT engine patents, arguing that one of its own patent applications precluded issuance of the Caterpillar patents. When the PTO agreed with Entec in September 2005 and rejected most of the claims in Caterpillar's patent because of Entec's patent applications, Caterpillar reasonably feared that Entec's victory before the PTO would embolden Entec to initiate further litigation. Caterpillar's concerns increased when the parties' settlement negotiations failed to result in an agreement. Caterpillar formally terminated the negotiations and then filed this action later that same day, reasonably expecting that a lawsuit would be the next logical (and likely) step in Entec's progressively more litigious efforts to assert its patents.

In sum, Caterpillar reasonably anticipated an imminent lawsuit from Entec, and this Court therefore has subject matter jurisdiction over this action. Contrary to Entec's assertions, there is no basis for this Court to exercise its discretion to dismiss this action. This declaratory judgment action is proper; it will resolve an actual controversy; and Entec's Motion should be denied.

I. CATERPILLAR HAD A REASONABLE APPREHENSION OF SUIT.

Despite Entec's effort to focus solely on the correspondence between it and Caterpillar, the Federal Circuit has made clear that the proper test is whether the *totality of circumstances* was sufficient to create a reasonable anticipation of suit. *See Vanguard Research, Inc. v. PEAT, Inc.*, 304 F.3d 1249, 1254 (Fed. Cir. 2002) ("[a]n examination of the totality of the circumstances must be made to determine whether there is a controversy"). That standard clearly is met here.

A. Entec's Infringement Letters Demonstrate its Belief that Caterpillar Infringed Entec's Patents and Applications

Entec does not – indeed, cannot – deny that it sent letters to Caterpillar in which Entec:

- Stated its belief that Caterpillar was "using Entec's patented technology" (Declaration of John Cheek ("Cheek Decl."), Ex. PA);
- Emphasized that "Entec does not concede" that Caterpillar does not infringe Entec's '550 patent (*id.*, Ex. PB);
- Suggested Caterpillar was trying to "cover up" its use of Entec's technology (*id.*);
- Accused Caterpillar of using "the ENTEC technology (including the '550 patent and other patents and allowed applications)" (*id.*); and
- Insisted that Entec does not "acquiesce in the positions of Caterpillar," including Caterpillar's statement that it does not use any Entec technology. *Id.*, Ex. PC.

Finally, after requesting reexamination of two of Caterpillar's patents in view of Entec's own patent application, Entec wrote to Caterpillar stating its belief that Caterpillar's patents "accurately describe the methods and apparatus used by Caterpillar in [its serially turbo charged ACERT] engines." *Id.*, Ex. PD. This statement indicates Entec's belief that its own patent application, the primary reexamination reference, must therefore also describe the methods and apparatus used by Caterpillar in its serially turbocharged ACERT engines.

The unmistakable significance of these letters is that ***Entec believes that Caterpillar infringes Entec's patents***. Entec's accusations that Caterpillar infringes, *by themselves*, create an actual controversy between the parties. *See Cardinal Chem. Co. v. Morton Int'l*, 508 U.S. 83, 96 (U.S. 1993) ("Merely the desire to avoid the threat of a 'scarecrow' patent … may therefore be sufficient to establish jurisdiction under the Declaratory Judgment Act. If, in addition to that

desire, a party has actually been charged with infringement of the patent, there is, necessarily, a case or controversy adequate to support jurisdiction...."); *Genentech v. Eli Lilly & Co.*, 998 F.2d 931, 936 (Fed. Cir. 1993); *Arrowhead Industrial Water, Inc. v. Ecolochem, Inc.*, 846 F.2d 731, 736 (Fed. Cir. 1988) ("If defendant has expressly charged a current activity of the plaintiff as an infringement, there is clearly an actual controversy, certainty has rendered apprehension irrelevant, and one need say no more.").

B. Entec's Initiation of the *Inter-Partes* Reexamination Showed That It Was Ready and Willing to Litigate With Caterpillar.

Entec's *inter-partes* reexamination request asked the PTO to reconsider whether Caterpillar's patents were validly issued, based primarily on Entec's own patent information. Entec's initiation of that proceeding is significant for three reasons.

First, it showed that Entec had moved to a litigious posture. Most proceedings in the PTO, including most reexamination proceedings, are conducted *ex-parte*, between a patent applicant and the PTO itself. An *inter-partes* reexamination is very different. It is a relatively rare adversarial proceeding that allows the requestor (Entec) to participate in the proceeding by providing written comments to the PTO regarding the patentee's (Caterpillar's) submissions to the PTO.[1] *See* 37 C.F.R. §§ 1.902-1.997. The *inter-partes* reexamination procedure allows further adversarial appellate proceedings through the Board of Patent Appeals and Interferences, an administrative law adjudicative body, and then up through the Court of Appeals for the Federal Circuit. *See* 37 C.F.R. §§ 1.959, 979, 981, and 983. Entec's initiation of *inter-partes* reexamination proceedings thus signaled that Entec was ready and willing to litigate. *See*

[1] Between 2001 and 2005, there were 1,925 *ex parte* reexamination requests filed in the PTO, while for the same time period, there were only 112 *inter partes* reexamination requests filed. *See* Declaration of Michael J. Stimson, Ex. PM, page 131 (PTO's Performance and Accountability Report, Fiscal Year 2005, Tables 13A and 13B).

Vanguard, 304 F.3d at 1254 (other litigation between the parties provided a reasonable apprehension of an impending infringement suit); *Goodyear Tire & Rubber Co. v. Releasomers, Inc.*, 824 F.2d 953, 955 (Fed. Cir. 1987) (state court litigation between the parties provided reasonable apprehension of patent infringement lawsuit).

Second, in initiating the *inter-partes* reexaminations, Entec *cited its own patent application against Caterpillar's patents.* Declaration of Michael J. Stimson ("Stimson Decl."), Exs. PF and PG. That is, Entec argued that its own patent application invalidated two of Caterpillar's ACERT patents – meaning that Entec argued that Caterpillar's ACERT technology already was covered by Entec's own patent applications. This was based on the *same* four patent applications as the applications that ultimately issued as Entec's '550 and '211 patents – the patents-in-suit here. *Id.*, Exs. PH-PJ.

Third, having initiated the adversarial proceeding, Entec sent Caterpillar another letter in which Entec stated its belief that Caterpillar's ACERT patents in reexamination covered technology used in Caterpillar's ACERT engines. Cheek Decl., Ex. PD. The clear implication of Entec's letter was that Entec believed its own patent applications covered that same technology and Caterpillar's ACERT engine technology therefore infringed Entec's patents and applications.

The PTO issued its actions closing reexamination in September 2005 and rejected Caterpillar's patents primarily in view of Entec's application. *See* Stimson Decl., Exs. PK, PL. At that point, Caterpillar became understandably apprehensive that Entec would be emboldened by its initial victory to take further litigious action.

Shortly thereafter, the parties began good faith settlement negotiations. Motion at 8-9 and Exs. M-S. They failed to result in an agreement, and shortly before filing suit, Caterpillar

formally terminated the negotiations in writing. Cheek Decl., Ex. PE.

II. ENTEC'S FOCUS SOLELY ON THE CORRESPONDENCE WITH CATERPILLAR IS INCONSISTENT WITH THE "TOTALITY OF CIRCUMSTANCES" TEST.

Entec does not – indeed, cannot – dispute the facts set forth above. Entec's accusations that Caterpillar is using its technology, infringing its patents, and engaging in a "cover up" of its supposed wrongdoing – as well as its unambiguous rejection of Caterpillar's assertion that it was not infringing Entec's patents or using its technology – are set forth in black and white. Nor can Entec deny that it initiated an adversarial proceeding in the PTO in which it retained counsel to challenge Caterpillar's patents on the basis of Entec's own patent application.

Faced with these facts, Entec's only response is to urge the Court to ignore them. Rather than focusing on the *totality* of the facts, as the law requires, Entec tries to focus on just one piece of the totality – the correspondence between Entec and Caterpillar – arguing that the other facts contributing to Caterpillar's reasonable apprehension somehow are irrelevant or not properly before the Court. Entec's strategy does not withstand scrutiny.

A. Entec's Adversarial Proceeding in the PTO Is Relevant to Caterpillar's Reasonable Apprehension of Suit.

Entec evidently realizes that its initiation of a contested proceeding against Caterpillar in the PTO to challenge Caterpillar's patents on the basis of its own is compelling support for Caterpillar's reasonable anticipation of suit. It therefore argues that the Court cannot consider its adversarial proceeding. Entec is wrong.

Entec first asserts that "actions in the PTO . . . cannot be the basis for a declaratory judgment . . . ." Motion at 8. Entec cites no authority for this proposition, and Caterpillar is aware of none. To the contrary, at least one court has found that a patent applicant's statements

to the PTO *can* create a reasonable apprehension of suit. *See Champion Int'l Inc. v. Technology Dev. Corp.*, 24 USPQ2d 1077, 1078 (S.D. Ohio 1992) (denying motion to dismiss because of defendant's statements to the PTO that the declaratory judgment plaintiff infringed).

Entec next suggests that "Caterpillar apparently concedes that the initiation of Reexaminations is not a fact on which a declaratory judgment can be based...." Motion at 7. Caterpillar, however, made no such concession or gave Entec any reason to believe it had. To the contrary, in the "Jurisdiction" section of its Complaint, Caterpillar alleged the following:

> "Entec filed requests for reexamination of two of Caterpillar's patents in the United States Patent and Trademark Office ('PTO') in an attempt to demonstrate that Entec's patents disclose the same technology claimed in Caterpillar's patents, and to thereby imply that Entec's patents cover one or more of Caterpillar's engine products." Complaint ¶12.

B. The Parties' Failure to Reach Agreement In Their Settlement Negotiations Is Relevant And Admissible.

Entec also evidently recognizes that termination of the settlement negotiations provides further support for Caterpillar's reasonable apprehension, so Entec tries to persuade the Court to exclude it from the "totality of circumstances," too. Again, Entec's efforts are without merit.

1. It Is Irrelevant That Caterpillar, Rather Than Entec, Terminated the Negotiations.

Entec first suggests that, because it was Caterpillar that terminated the negotiations, the breakdown in the settlement talks is irrelevant to the "reasonable apprehension" calculus. As a matter of law, however, it does not matter who terminated the negotiations. "[I]t is not a prerequisite that negotiations must terminate naturally or amicably, nor that the defendant must be the party to terminate negotiations, for a declaratory judgment plaintiff to establish jurisdiction." *Oce-Office Sys., Inc. v. Eastman Kodak Co.*, 805 F.Supp. 642, 645-647 (N.D. Ill. 1992). Once Caterpillar terminated the negotiations, it reasonably apprehended that it was

vulnerable to a lawsuit. *See Electronics for Imaging Inc. v. Coyle*, 394 F.3d 1341, 1347 (Fed. Cir. 2005) (reversing dismissal of declaratory judgment action, holding that plaintiff's termination of negotiations did not deprive plaintiff of right to sue).

2. Settlement Negotiations Were Terminated *Before* Caterpillar Filed This Action.

Entec next argues that the termination of the negotiations could not have contributed to Caterpillar's apprehension of suit because Caterpillar did not fax its the termination letter until after the lawsuit was filed. Motion at 9, 12, 14, and 15. Entec is mistaken.

Entec apparently bases its assertion on the facsimile "header" on Caterpillar's letter. But the fax heading was, quite simply, in error; the machine Caterpillar used to send the letter to Entec terminating the negotiations had not been adjusted from Central Daylight Savings Time to Central Standard Time. Declaration of Kathy Weiss,. ¶¶ 2, 3 and Ex. WD1 and WD2. The timestamp on the fax therefore was one hour later than the actual time the fax was transmitted – which means Caterpillar actually sent the fax terminating negotiations *before* it filed this action. *Id.*

3. The Parties' Pre-Negotiation Agreement Does Not Preclude the Court From Knowing About – and Considering – the Fact That the Settlement Negotiations Were Terminated.

Finally, Entec argues that its pre-negotiation agreement with Caterpillar precludes Caterpillar from mentioning the *fact* that the settlement negotiations failed or relying on that fact to support jurisdiction. Entec is wrong. The language that Entec cites reads:

> "Caterpillar . . . agrees that neither party shall use any communications (whether oral or in writing) made during this meeting, or any communications relating to the meeting, to initiate any legal proceedings or as evidence in any legal proceeding, other than to prove and enforce agreements that might be reached during the meeting." Motion at 9, Motion Ex. P.

Caterpillar complied with this agreement. It did not cite any "communications … made during" the meetings, nor any "communications relating to the meeting" to initiate legal proceedings. Caterpillar's complaint states only the *facts* that it participated in settlement negotiations with Entec and that those negotiations were unsuccessful. Those facts are relevant to the "totality of circumstances" supporting Caterpillar's anticipation of suit. The parties' agreement does not require Caterpillar to remain silent about them or this Court to ignore them.

C. Entec's Efforts to Neutralize Its Accusatory Letters to Caterpillar Are Unavailing.

Having tried to limit the Court's inquiry to its letters, Entec next tries to put a benign "spin" on them that neither the letters nor the law supports. As shown, Entec's letters to Caterpillar unequivocally conveyed Entec's belief that Caterpillar was infringing Entec's patents and using its technology. Entec's effort to diminish the significance of these letters fails.

1. Entec's Letters Need Not Contain Express Threats of Litigation to Show that Entec Believed Caterpillar Infringes.

Entec makes much of the fact that its letters do not expressly threaten to sue. Motion at 5, 7. But this is irrelevant to this Court's inquiry. Even the case Entec cites – *BP Chems. Ltd. v. Union Carbide Corp.*, 4 F.3d 975, 978 (Fed. Cir. 1993) – makes clear that declaratory judgment jurisdiction requires "an explicit threat *or other action* by the patentee, which creates a reasonable apprehension on the part of the declaratory plaintiff that it will face an infringement suit…." (emphasis added). *See also Vanguard*, 304 F.3d at 1254 ("Although the best evidence of a reasonable apprehension of suit comes in the form of an express threat of litigation, *an express threat is not required*.") (emphasis added).

Likewise, Entec's focus on the "cordiality" of its letters (Motion at 2) is irrelevant. "The test for finding a 'controversy' … cannot turn on whether the parties use polite terms in dealing

with one another or engage in more bellicose saber rattling." *EMC Corp. v. Norand Corp.*, 89 F.3d 807, 811-812 (Fed. Cir. 1996). As the court explained:

> "The need to look to substance rather than form is especially important in this area, because in many instances (as in this case) the parties are sensitive to the prospect of a declaratory judgment action and couch their exchanges in terms designed either to create or defeat declaratory judgment jurisdiction. In the end, the question is whether the relationship between the parties can be considered a 'controversy,' and that inquiry does not turn on whether the parties have used particular 'magic words' in communicating with one another." *Id.*

Next, Entec tries to dismiss the letters as mere licensing offers. Motion at 13-14. But read in full (and, together, in context) they were clearly more than that. Even so, courts have recognized that, while "the offer of a license, alone, is not sufficient to create a reasonable apprehension on the part of the plaintiff … it is a factor to be considered in determining whether the totality of the circumstances indicates a reasonable apprehension." *Millipore Corp. v. University Patents Inc.*, 682 F. Supp. 227, 233 (D. Del. 1987).

In short, the series of letters from Entec's counsel to Caterpillar are not the benign correspondence that Entec would have the Court believe.

2. The Passage of Time Between Entec's Infringement Letters and the Filing of This Action Does Not Diminish the Letters' Contribution to Caterpillar's Apprehension.

Setting aside the content of its letters, Entec argues that they were too old to support a reasonable apprehension of suit by Caterpillar when the action was filed. Motion at 8, 12. Caterpillar's Complaint does cite correspondence from October 29, 2003 in which Entec first stated its belief that Caterpillar infringed claims in an application that ultimately issued as the '211 patent and accused Caterpillar of "covering up" its use of Entec's technology and trade secrets. Cheek Decl., Ex. PB. But that letter is just one part of the totality of circumstances that

caused Caterpillar to reasonably anticipate a lawsuit. *See Vanguard*, 304 F.3d at 1254. Caterpillar's apprehension of a lawsuit was heightened when Entec followed its infringement letters with an adversarial proceeding before the PTO. And its apprehension was further intensified in late 2005, when Entec received its initial victory in the reexamination of Caterpillar's patents and settlement negotiations failed. At that point, it was reasonable for Caterpillar to believe that a lawsuit was the next logical step in Entec's escalating efforts to protect its patents. *Vanguard*, 304 F.3d at 1255 (finding reasonable apprehension when "[f]iling a lawsuit for patent infringement would be just another logical step in [the defendant's] quest to protect its technology.").

In short, Entec's correspondence in 2003 and 2004 informed Caterpillar of Entec's belief that Caterpillar is infringing and misappropriating; Entec's later conduct in 2005 confirmed that its beliefs had not changed and that it was likely gearing up to take action on them.

III. ENTEC'S LIMITED COVENANT NOT TO SUE DOES NOT VITIATE CATERPILLAR'S REASONABLE ANTICIPATION OF SUIT.

Unable to show that the totality of its conduct is benign, Entec changes tacks: It attempts to erase Caterpillar's reasonable anticipation of a lawsuit by proffering a "Covenant Not to Sue," which Entec created after this lawsuit was filed in an effort to moot the action. Entec argues that its newly-minted Covenant shows that Caterpillar has no reason to fear a lawsuit from either Entec or Bryant and that it therefore "conclusively establishes that Caterpillar does not have ongoing jurisdiction." Motion at 15. Entec is wrong.

It is true that, if broad enough, a covenant not to sue may effectively moot a declaratory judgment action. But to deprive the court of jurisdiction, the covenant must "eliminate the reasonable apprehension." *See Fina Research, S.A. v. Baroid Ltd.*, 141 F.3d 1479, 1484 (Fed.

Cir. 1998). A covenant that is qualified cannot moot a declaratory judgment action because it still leaves open the door to litigation. *See id.* (reversing dismissal of declaratory judgment action because covenant not to sue failed to disclaim charges of inducing infringement).

That is exactly the problem with Entec's Covenant. It is so riddled with limitations, qualifiers, and loopholes that it does not begin to eliminate Caterpillar's reasonable apprehension of suit. To the contrary, it underscores how very real the threat of litigation from Entec was when the complaint was filed and still is today. For example:

First, Entec covenants only not to sue for trade secret misappropriation based on conduct "*up through and including the filing*" of this action "at 10:42:07 AM on December 21, 2005." Motion Ex. A (emphasis added). Entec left itself free to sue for conduct occurring after that date and time, even the same conduct that occurred *before* the filing of this action. Conduct that took place after Caterpillar filed this action will be and is at issue in this action, and it would have to be released to resolve Caterpillar's apprehension.

Second, Entec has covenanted only not to sue for patent infringement based on products "made, used, offered for sale, or sold by Caterpillar . . . *through the date of filing of this Declaratory Judgment Action.*" Motion Ex. A (emphasis added). Again, Entec preserved its ability to sue Caterpillar for any alleged infringement occurring after 10:42:07 AM on December 21, 2005 – including the same products that were "made, used, offered for sale, or sold" by Caterpillar after the filing of this action, but *before* the filing of a proper covenant not to sue. Caterpillar already has sold many such products that are subject to this action but are not covered by the proposed covenant. At a minimum, Entec and Bryant must extend the Covenant's effective date through the date of the filing of the Covenant in this case. *See Super Sack Mfg. Corp. v. Chase Packaging Corp.*, 57 F.3d 1054, 1059 (Fed. Cir. 1995) (covenant not to sue was

effective where it extended to the filing date of the covenant).

Third, Entec limits its Covenant Not to Sue based on Caterpillar's actions and products "through the date of filing of this Declaratory Judgment Action," but excludes Caterpillar's future actions and products that are substantially the same as those before the Declaratory Judgment Action, including products already made, used, sold, or offered for sale. Motion Ex. A. Under Entec's Covenant, it would be free to sue Caterpillar for infringement by future products that incorporate any small change – even a change completely unrelated to the technology claimed in Entec's patents. And Entec would be free to sue Caterpillar for trade secret misappropriation for acts, including minor redesigns, that are slightly different than Caterpillar's acts before it brought this action, but that implicate no Entec technology.

Fourth, the Covenant not to sue for infringement only extends to products "currently or formerly made, used, offered for sale, or sold by Caterpillar." Motion Ex. A. It does not extend to claims of *induced* infringement or *contributory* infringement, both of which are subjects of Caterpillar's request for declaratory judgment. *See* Complaint ¶¶ 37, 38. This alone is fatal to Entec's argument. *See Fina*, 141 F.3d at 1484 (covenant not to sue does not "eliminate reasonable apprehension" where it fails to disclaim charges of inducing infringement).

Fifth, the Covenant not to sue for infringement only extends to "products," as they are ambiguously defined in the final sentence of the document. The covenant does not extend to the use of allegedly infringing "methods." The Covenant thus leaves Entec and Bryant free to sue Caterpillar for infringing any of the method claims in the '211 patent.

Sixth, Entec limits the Covenant only to certain "products," which it defines as "one unique device with certain size and shape components and all identical duplicates of that device." Motion Ex. A. What Entec intends by this oblique definition is not clear, but it *is* clear that

Entec intends to limit in some manner the scope of the covenant and the "products" to which it applies. Had Entec intended to give an unqualified covenant not to sue, it would not have qualified the scope of "product." *See Super Sack*, 57 F.3d at 1057 (effective covenant not to sue "unconditionally promised not to sue [plaintiff] in the future for infringement of the patents-in-suit with respect to *any products currently manufactured or sold*") (emphasis added).

Seventh, the Covenant is executed only by Lannie Clark and Clyde Bryant, who purport to sign for Entec Engine Corporation. But Entec gives no warranty that they have authority to act for and bind Entec to such an agreement. Furthermore, Defendants admit that Entec Engine Corporation is only a licensee of the patents-in-suit and that Clyde Bryant is the patent holder. *See* Motion at 3. And yet Bryant made a point of signing the Covenant only as "President" of Entec Engine Corporation, not in his individual capacity. Thus, Bryant left himself free to sue Caterpillar on any of his claims in his individual capacity as the patent owner.

In sum, Entec's Covenant is too craftily worded. Far from a sweeping promise to forego filing any claims against Caterpillar, this "covenant" is an implicit *preservation* of Entec's right to sue Caterpillar for a broad range of products and activities. This document is further evidence that Caterpillar's apprehension of a lawsuit from Entec is objectively reasonable.

IV. THERE IS NO BASIS FOR THIS COURT TO EXERCISE ITS DISCRETION AND DECLINE TO HEAR THIS LAWSUIT.

Finally, Entec argues that even if there is an actual controversy between the parties – and there plainly is – the Court should exercise its discretion to dismiss the action. The Federal Circuit has made clear, however, that "[t]here must be well-founded reasons for declining to entertain a declaratory judgment action." *Capo, Inc. v. Dioptics Med. Prods.*, 387 F.3d 1352, 1355 (Fed. Cir. 2004). None of Entec's arguments supports a discretionary dismissal.

First, Entec urges the Court to decline to exercise jurisdiction because Caterpillar "did not terminate the settlement negotiations until after it filed suit" and Caterpillar should not have advised the Court of the termination of the negotiations. Motion at 18. As shown above, however, both arguments are factually wrong.

Second, Entec argues that Caterpillar engaged in impermissible forum shopping by filing for declaratory judgment and suggests that *it* (Entec) should be permitted to select the forum for this lawsuit. *Id.* at 17. But this argument belies Entec's insistence that there is no reasonable basis for Caterpillar to fear a lawsuit. If Entec has no interest in filing a lawsuit, why is it worried about being the party to select the forum?

Third, Entec argues that this lawsuit should be dismissed because it is an "improper anticipatory filing." Motion at 16, 17, and 19. But, by their nature, declaratory judgment actions are filed in anticipation of litigation being brought. Under settled law, "when the patentee takes steps that create a reasonable apprehension that he will seek redress through the courts, the alleged infringer is not required to wait for the patentee to decide when and where to sue, but can take the initiative and seek declaratory relief." *EMC Corp.*, 89 F.3d at 811; *See also Electronics For Imaging, Inc.*, 394 F.3d at 1347 ("the district court abused its discretion in its dismissal order by focusing on the anticipatory nature of the suit. We apply the general rule favoring the forum of the first-filed case....'").

Finally, Entec suggests that the Court should dismiss this action because of "the relative size and financial position of Entec as compared to Caterpillar" and because it "can ill afford to litigate with such a well-heeled opponent." Motion at 19. Entec cites no authority for the proposition that a court may dismiss a lawsuit presenting an actual controversy because one of the parties is smaller than the other or finds litigation too expensive; nor has Entec cited any

evidence to support its claims of small size and meager resources. In fact, Entec already retained counsel for its adversarial proceeding in the PTO and in its communications with Caterpillar. Entec cannot avoid a judicial resolution of the disputes it has precipitated by claiming it cannot afford to hire lawyers unless it chooses the forum.

CONCLUSION

Entec's conduct has caused in Caterpillar a reasonable apprehension of an impending lawsuit. Entec's letters to Caterpillar set forth its belief that Caterpillar infringes its patents and is using its proprietary technology. Entec's aggressive instigation of adversarial proceedings in the PTO, and its correspondence indicating that those proceedings are directed to demonstrating Caterpillar's infringement, show that Entec is ready and willing to litigate. And the failure of the December 2005 settlement negotiations pointed to Entec's next logical step – a patent infringement suit. Entec's Motion to Dismiss should be denied.

DATED: February 9, 2006.

Respectfully submitted,

/s/ Robert M. Bennett

TIMOTHY L. BERTSCHY
ROBERT M. BENNETT
HEYL, ROYSTER, VOELKER & ALLEN
124 S.W. Adams St., Suite 600
Peoria, IL 61602
Telephone: (309) 676-0400
Facsimile: (309) 676-3374

ROBERT G. ABRAMS
HOWREY LLP
1299 Pennsylvania Ave., NW
Washington, DC 20004
Telephone: (202) 783-0800
Facsimile: (202) 383-6610

WILLIAM C. ROOKLIDGE
MARTHA K. GOODING
MICHAEL J. STIMSON
HOWREY LLP
2020 Main Street
Irvine, California 92614-8200
Telephone: (949) 721-6900
Facsimile: (949) 721-6910

Certificate of Compliance With CDIL-LR 7.1(B)(4)(b)

I am an attorney representing Plaintiff Caterpillar, Inc. in this matter. I certify that I prepared the forgoing Caterpillar's Opposition to Defendants' Motion to Dismiss ("Opposition"), and that this Opposition contains 5,133 words and 33,516 characters, including spaces, exclusive of this Certificate, as determined by the "Word Count" feature of Microsoft Word.

s/Michael J. Stimson

CERTIFICATE OF SERVICE

I hereby certify that on February 9, 2006, a copy of the foregoing Caterpillar's Opposition to Defendants' Motion to Dismiss was served upon the following attorneys via the CM/ECF filing service:

Mr. Fred E. Schulz
Wildman Harrold Allen & Dixon, LLP
225 W. Wacker Dr., Suite 2800
Chicago, IL 60606-1229
312-201-2000 telephone
312-201-2555 facsimile
schultz@wildmanharrold.com

and to the following attorney via U.S. Mail:

Mr. Kirk W. Watkins
Womble Carlyle Sandridge & Rice
One Atlantic Center
1201 W. Peachtree Street
Atlanta, GA 30309

/s/ Robert M. Bennett

E-FILED
Thursday, 09 February, 2006 05:17:35 PM
Clerk, U.S. District Court, ILCD

UNITED STATES DISTRICT COURT
FOR THE CENTRAL DISTRICT OF ILLINOIS

CATERPILLAR INC. Plaintiff, v. ENTEC ENGINE CORPORATION, a corporation; and CLYDE C. BRYANT, an individual, Defendants.	Civil Action File No. 1:05-cvp01394-MMM-JAG

DECLARATION OF JOHN J. CHEEK IN SUPPORT OF OPPOSITION BY PLAINTIFF CATERPILLAR INC. TO DEFENDANTS' MOTION TO DISMISS

I, John Cheek, declare:

1. I am an Intellectual Property Attorney for Caterpillar Inc. ("Caterpillar").

2. I am familiar with Caterpillar's methods and routines for storing business records and business correspondence.

3. A true and correct copy of a letter from Wendell R. Bird and Mark P. Miller to Robert J. Hampsch, dated June 16, 2003, kept by Caterpillar in the ordinary course of business, is attached hereto as Exhibit PA.

4. A true and correct copy of a letter from Wendell R. Bird and Mark P. Miller to Keith P. Roberson, dated October 29, 2003, kept by Caterpillar in the ordinary course of business, is attached hereto as Exhibit PB.

5. A true and correct copy of a letter from Wendell R. Bird and Mark P. Miller to Keith P. Roberson, dated May 31, 2004, kept by Caterpillar in the ordinary course of business, is attached hereto as Exhibit PC.

6. A true and correct copy of a letter from Louis T. Isaf to Keith Roberson, dated September 23, 2004, kept by Caterpillar in the ordinary course of business, is attached hereto as Exhibit PD.

7. A true and correct copy of a letter from Willibald G. Berlinger to Clyde C. Bryant, dated December 21, 2005, kept by Caterpillar in the ordinary course of business, is attached hereto as Exhibit PE.

I declare under penalty of perjury under the laws of the United States that the foregoing is true and correct, and that this Declaration was executed this 8th day of February 2006 at Peoria, Illinois.

John Cheek

E-FILED
Thursday, 09 February, 2006 05:18:55 PM
Clerk, U.S. District Court, ILCD

Bird & Loechl
A LIMITED LIABILITY COMPANY‡
ATTORNEYS AT LAW
1150 MONARCH PLAZA
3414 PEACHTREE ROAD, NORTHEAST
ATLANTA, GEORGIA 30326
(404) 264-9400

WENDELL R. BIRD*, P.C.
RICHARD L. BRITTAIN†
PHILIP A. CRAIG†
KEVIN J. LOECHL**
JONATHAN T. McCANTS***
MARK P. MILLER****
DAVID O. TREADWELL, JR.†*****
THOMAS O. KOTOUC******
RUSSELL P. REACH†*******

FACSIMILE: (404) 365-9731
E-MAIL: INFO@BIRDLAWFIRM.COM
WEB SITE: WWW.BIRDLAWFIRM.COM

*ALSO ADMITTED IN FLORIDA, ALABAMA AND CALIFORNIA
**ALSO ADMITTED IN ILLINOIS
***ALSO ADMITTED IN MISSISSIPPI
****ADMITTED IN VIRGINIA
*****ALSO ADMITTED IN DISTRICT OF COLUMBIA AND MARYLAND
******ALSO ADMITTED IN ALABAMA, NEBRASKA AND SOUTH CAROLINA
*******ALSO ADMITTED IN SOUTH CAROLINA
†OF COUNSEL
‡INCLUDING PROFESSIONAL CORPORATIONS

June 16, 2003

VIA CERTIFIED MAIL 7001 1140 0001 3436 0935

Robert J. Hampsch, Esq.
Intellectual Property Counsel
Caterpillar, Inc.
100 N.E. Adams Street
Peoria, IL 61629

RECEIVED
PATENT DEPT.
JUN 20 2003
CATERPILLAR INC.

RE: Proposal for License of Technology

Dear Mr. Hampsch:

We write on behalf of Entec Engine Corporation, which we and Womble Carlyle Sandridge & Rice represent.

We write to initiate good faith discussions to offer a license to Caterpillar for Entec's technology on mutually acceptable terms.

Caterpillar met with Clyde Bryant, the Entec Chairman and inventor, on January 20, 2000 at the Caterpillar research center in Peoria, along with Lanny Clark and Michael Addison of Entec. At those meetings, Entec gave Caterpillar copies of the U.S. Patent Application of May 23, 1997 (which resulted in U.S. Patent 6,279,550) and the then-current version of its Technical Presentation and of its Business Plan, and described the claims and technology that appear in the attached list of U.S. Patents and in corresponding foreign patents. Caterpillar's reviewer, John Clarke reviewed the technology at the January 20, 2000 meeting, and judged it to be a quantum leap in engine technology.

Mr. Ashok Chanda of Caterpillar sat in for different parts of that meeting. At the end of the meeting Mr. Chanda, who was also excited by the Entec technology presented, promised to send Entec a "Letter of Interest" in ten days along with a signed copy of Entec's Confidentiality Agreement. Ten days later, Mr. Chanda told Entec that Caterpillar was going to build the engine but not within the DOE solicitation[1] for which Caterpillar, Entec and five other engine companies were at that time busily preparing proposals, and that Caterpillar was going to build the engine on its own.

It will be remembered that Caterpillar presented their proposal to the DOE solicitation, due by July 29, 2000, apparently sans any new technology, and was granted $10-plus million, apparently after admittedly having no new technology. Under the DOE grant Caterpillar would have to share any new

[1] Solicitation for Financial Assistance Applications No.DE-SC02-00CH11029

ideas for better engines with the other two engine companies which shared in the $40 million grant. Then on March 6, 2001, Caterpillar announced that they had a new engine technology for reducing emissions, termed ACERT™, acronym for "Advanced Combustion Emissions Reduction Technology." We believe that under the terms of the DOE grants of 2000 totallying $40 million, they were to share any new technology for engines developed by Caterpillar under the five year term of the DOE contract, yet even in their DOE proposal, apparently Caterpillar listed no new technology

Caterpillar also sent your attached letter of May 4, 2000 confirming that "any confidential information disclosed [by Entec] will remain in confidence," in response to the attached letter of April 20, 2000, from Entec's IP law firm, Womble Carlyle Sandridge & Rice, describing the confidential nature of Entec's technology and recounting the discussions with Caterpillar about signing a confidentiality agreement.

Caterpillar is apparently now using Entec's patented technology, as shown by the attached:

(a) ACERT Engine Brochures found at www.DieselNet.com (March 06, 2001); where Caterpillar touted their new low emissions technology but would give no details. This would seem to be a breach of any agreement that may have been made to share research findings with fellow team members (Cummins and Waukasha Engine Companies who shared in the $40 million DOE grant).

(b) Caterpillar press release (of March 19, 2003), in which under "Air Systems" they state, "Our air system technology delivers cool, clean air into the combustion chamber instead of recycled exhaust". No engine can deliver cool clean air into the combustion chamber except by the proprietary Entec Cycle System, because all air charge in all other engines is compressed into the combustion chamber producing great heat. This is a major factor that limits engine power and produces great polluting emissions. The second paragraph states that the "ACERT technology uses two turbochargers in series (in line) that split the work, putting less stress on either turbocharger for increased turbo component life."

(c) The latter statement is nonsensical because (a) the two turbochargers will turn the same number of times thus not reducing the stress; (b) the second in line compressor will do a multiple of the work of the first compressor since it is producing a "second stage" of compression for a much greater pressure output, and will wear more than a single compressor. Actually, the reason for two stages of compression is to produce higher pressure.

It appears that Caterpillar is trying to cover up the fact that they are putting cooled, highly compressed air into the cylinder during the compression stroke, rather than during the intake stroke as do all engines except Entec. Campbell states, "Our air system----delivers cool clean air into the combustion chamber instead of recycled exhaust." He also states, "This results in reduction of oxides of nitrogen, as well as providing better fuel economy."

This implies that they simply switched from pumping recycled exhaust into the combustion chamber to simply pumping cooled clean air into the combustion chamber. Now recycled exhaust has always been introduced into an engine during the intake stroke which always pulled in part fresh air and part recycled exhaust gases. Never have either recycled gases or compressed cooled fresh air been introduced into the cylinder late in the compression stroke. Therefore, this seems to be another attempt to cover up the revolutionary change of pumping compressed and cooled air into the cylinder during the compression stroke or directly into the combustion chamber at piston top dead center, which technology was presented to them by Entec on January 20, 2000 and which is covered by very broad claims in Entec's patents.

Other evidence of a cover-up comes from a statement by a high official in a billion dollar company which has used Caterpillar engines for many years putting together and installing "distributed power" using Caterpillar and other engines which they fitted with power generators and switchgear and installed around the world. This official at Stewart-Stevenson International, when reviewing the Entec engine said, "This seems to be the same as Caterpillar's ACERT engine."

Please let us know whether Caterpillar wishes to enter good faith discussions about a mutually acceptable license of Entec's technology. Please let us know also if you would thereafter like Entec to work with Caterpillar in modifying its ACERT technology.

Entec has had exciting reports about the novelty and potential advantages of its technology over state-of-the-art engines. Some of the reviews giving positive comments are by the EPA, DOE, Propulsion Lab at the Naval Academy at Annapolis, University of Maryland Center for Automotive Research, and many engine manufacturers. Entec is engaged in positive negotiations for rights with two foreign engine manufacturers and with two U.S. engine manufacturers, to partner in the development and marketing of Entec's technology. The first companies working positively with Entec will receive favorable terms for initial payments and royalties, and Entec invites Caterpillar to enter good faith discussions to be among those first companies. Entec does not intend to approve all possible licenses. Should Caterpillar be willing to enter into negotiations with Entec concerning licensing, we would like to disclose other proprietary revolutionary concepts concerning prime movers which virtually eliminate NOx and particulates, a new Co-Gen systems and a more efficient air conditioning system, which on all of, Entec has patent protection.

We look forward to hearing from you.

Sincerely,

Wendell R. Bird, P.C.
Bird & Loechl, LLC

Mark P. Miller, Esq.
Bird & Loechl, LLC

cc: Mr. Glen A. Barton, Chairman and CEO
Mr. Douglas R. Oberhelman, Group President
Mr. James J. Parker, Vice President
Louis T. Isaf, Esq., Womble Carlyle
Mr. Clyde C. Bryant, Chairman, Entec Engine Company

Enclosures: U.S. Patent 6,279,550 owned by Entec
Letter from Womble Carlyle to Ashock Chanda (Apr.20, 2000)
Letter from Robert J. Hampsch to Womble Carlyle (May 4, 2000)
Press Release: "Caterpillar Announces New Emission Technology"
Caterpillar web site: "Caterpillar ACERT Technology Combines Four Proven Systems to Lower Emissions"
ACERT Alert Newsletter (First)

ENTEC ENGINE CORPORATION
PATENT STATUS

Entec Cycle Engine	Country	Patent No. or Application No.	
Improved Internal Combustion Engine & Working Cycle	United States	6,279,550	I
Improved Internal Combustion Engine & Working Cycle	Patent Cooperation Treaty	US97/09072	G
Improved Internal Combustion Engine & Working Cycle	Australia	32883/97 Application	I
Improved Internal Combustion Engine & Working Cycle	European Patent Office	97 928 685.3 Application	G
Improved Internal Combustion Engine & Working Cycle	Austria	97 928 685.3 Application	G
Improved Internal Combustion Engine & Working Cycle	Belgium	97 928 685.3 Application	G
Improved Internal Combustion Engine & Working Cycle	Switzerland	97 928 685.3 Application	G
Improved Internal Combustion Engine & Working Cycle	Liechtenstein	97 928 685.3 Application	G
Improved Internal Combustion Engine & Working Cycle	Germany	97 928 685.3 Application	G
Improved Internal Combustion Engine & Working Cycle	Denmark	97 928 685.3 Application	G
Improved Internal Combustion Engine & Working Cycle	Spain	97 928.685.3 Application	G
Improved Internal Combustion Engine & Working Cycle	Finland	97 928 685.3 Application	G
Improved Internal Combustion Engine & Working Cycle	France	97 928 685.3 Application	G
Improved Internal Combustion Engine & Working Cycle	United Kingdom	97 928 685.3 Application	G
Improved Internal Combustion Engine & Working Cycle	Greece	97 928 685.3 Application	G
Improved Internal Combustion Engine & Working Cycle	Ireland	97 928 685.3 Application	G
Improved Internal Combustion Engine & Working Cycle	Italy	97 928 685.3 Application	G
Improved Internal Combustion Engine & Working Cycle	Luxembourg	97 928 685.3 Application	G
Improved Internal Combustion Engine & Working Cycle	The Netherlands	97 928 685.3 Application	G
Improved Internal Combustion Engine & Working Cycle	Portugal	97 928 685.3 Application	G
Improved Internal Combustion Engine &	Sweden	97 928 685.3 Application	G

Working Cycle			
Improved Internal Combustion Engine & Working Cycle	Slovenia	97 928 685.3 Application	G
Improved Internal Combustion Engine & Working Cycle	Romania	97 928 685.3 Application	G
Improved Internal Combustion Engine & Working Cycle	Singapore	65,820 (Issued)	I
Improved Internal Combustion Engine & Working Cycle	South Vietnam	S19990413 Application	P
Improved Internal Combustion Engine & Working Cycle	United States	6,279,550	I
Improved Internal Combustion Engine & Working Cycle	Ukraine	Application 99052848 (Claims Allowed) (Issued)	I
Improved Internal Combustion Engine & Working Cycle	Russia	Application 99115865 (Claims Allowed) (Issued)	I
Improved Internal Combustion Engine & Working Cycle	Norway	Application	G
Improved Internal Combustion Engine & Working Cycle	Germany	A1999-003574 Application	G
Improved Internal Combustion Engine & Working Cycle	Brazil	90630 Application	G
Improved Internal Combustion Engine & Working Cycle	United States	60/259,727 Provisional	
Improved Internal Combustion Engine & Working Cycle	United States	60/278,030 Provisional	
Improved Internal Combustion Engine & Working Cycle	United States	60/284,711 Provisional	
Improved Internal Combustion Engine & Working Cycle	United States	60/296,620 Provisional	
Improved Internal Combustion Engine & Working Cycle	United States	60/297,663 Provisional	
Improved Internal Combustion Engine & Working Cycle	United States	Provisional (number not yet Assigned)	A
Improved Internal Combustion Engine & Working Cycle	Canada	2,276,245 Application	P
Combination Engine	United States	4,235,077	I
Distress Signal Balloon	United States	4,185,582	I
Crash Force Sensor	United States	4,298,777	I
Non-Fade Disc Brake	United States	4,014,410	I
Internal Combustion Engine	United States	4,565,167	I
Internal Combustion Engine	Germany	3280068.1-08	I
Internal Combustion Engine	United Kingdom	0057591	I
Internal Combustion Engine	Italy	0057591	I
Internal Combustion Engine	France	0057591	I
Internal Combustion Engine	Sweden	0057591	I
Internal Combustion Engine	Brazil	8200376	I

Internal Combustion Engine	Canada	1188938	I
Internal Combustion Engine	Taiwan	18386	I
Internal Combustion Engine	Japan	1797603	I
Internal Combustion Engine	China	97181015.X Application	P
Internal Combustion Engine	European Patent Office	6,279,550	G
	Austria		G
	Belgium		G
	Switzerland/Liechtenstein		G
	Cyprus		G
	Germany		G
	Denmark		G
	Spain		G
	Finland		G
	France		G
	United Kingdom		G
	Greece		G
	Italy		G
	Netherlands		G
	Portugal		G
	Sweden		G
	Turkey		G
	Ireland		G
	Albania		G
	Lithuania		G
	Latvia		G
	Macedonia		G
	Romania		G
	Slovenia		G

A = Applied For
G = Granted
I = Issued
P = Pending

E-FILED
Thursday, 09 February, 2006 05:20:00 PM
Clerk, U.S. District Court, ILCD

Bird & Loechl
A LIMITED LIABILITY COMPANY‡
ATTORNEYS AT LAW
1150 MONARCH PLAZA
3414 PEACHTREE ROAD, NORTHEAST
ATLANTA, GEORGIA 30326
(404) 264-9400

WENDELL R. BIRD*, P.C.
RICHARD L. BRITTAIN†
PHILIP A. CRAIG†
KEVIN J. LOECHL**
JONATHAN T. McCANTS***
MARK P. MILLER****
DAVID O. TREADWELL, JR.†*****
THOMAS O. KOTOUC******
RUSSELL P. REACH†*******

FACSIMILE: (404) 365-9731
E-MAIL: INFO@BIRDLAWFIRM.COM
WEB SITE: WWW.BIRDLAWFIRM.COM

*ALSO ADMITTED IN FLORIDA, ALABAMA AND CALIFORNIA
**ALSO ADMITTED IN ILLINOIS
***ALSO ADMITTED IN MISSISSIPPI
****ADMITTED IN VIRGINIA
*****ALSO ADMITTED IN DISTRICT OF COLUMBIA AND MARYLAND
******ALSO ADMITTED IN ALABAMA, NEBRASKA AND SOUTH CAROLINA
*******ALSO ADMITTED IN SOUTH CAROLINA
†OF COUNSEL
‡INCLUDING PROFESSIONAL CORPORATIONS

October 29, 2003

Via Certified Mail 7002 0860 0004 7513 7226

Mr. Keith P. Roberson
Senior Intellectual Property Attorney
Caterpillar, Inc.
100 Northeast Adams Street
Peoria, Illinois 61629-6409

RE: Entec Technology

Dear Mr. Roberson,

We write again on behalf of Entec Engine Corporation whom we and Womble Carlyle Sandridge and Rice represent.

This is in response to your letter of August 1, 2003, in which you declined an offer to license ENTEC technology, which offer was made in our letter to Caterpillar dated June 16, 2003. You also took the opportunity to deny on behalf of Caterpillar "that it has infringed [patent] '550 or violated any obligation to Entec." The purpose of our current letter is to make of record that Entec does not concede nor acquiesce to the statements and conclusions expressed in your letter.

It is not our goal in this exchange to engage in an adversarial tit-for-tat - we will certainly each have our opinions and points of view. However, as a courtesy and because of your request, we make the following reply to your August 1st letter:

1) Entec has never suggested (as you imply in your letter) that any internal combustion engine avoids a temperature increase during the compression stroke, and we know of nothing in our letter that could suggest that we hold that opinion.

2) You assert in your letter that, "similar to other internal combustion engines, ACERT technology engines may include ... intake valves remaining open during a portion of the compression stroke." This statement is instructive for what it does not say. You and Caterpillar certainly have better knowledge of the facts of your ACERT Technology Engine than does Entec at the current time. However, it is our understanding that the ACERT engine includes, among other features, one air intake valve to a cylinder that takes in an air charge at ambient pressure, and also two turbo-chargers, in line, that produce compressed air that is cooled after compression and is introduced into the cylinder through a second

intake valve during the piston's compression stroke. Kindly advise us, if we are wrong.

3) Caterpillar's obligations of confidentiality, given the circumstances of the conference and disclosure of January 20, 2000, are not governed solely by the Nondisclosure Agreement of December 21, 1999. Furthermore, Caterpillar is capable of reviewing all materials presented to Caterpillar and determining what of those materials exceeded the content of the January 1998 International Patent Application Publication. Nevertheless, and without reducing your own responsibility for diligence, we point out that in addition to the U.S. patent application of 1997 (which has resulted in the '550 patent, a new U.S. Patent allowance and numerous other patents and allowed applications), Entec did present additional designs and features, with drawings, at the Entec/Caterpillar January 20, 2000 meeting, describing proprietary improvements in engines. This additional material included at least a disclosure entitled "Condensed Description of the ENTEC Cycle Engine" with one version A and another design B.

4). Concerning the DOE Solicitation No. DE-SC02-00CH11029 (Solicitation), we have confirmed that this is the correct number. It should be easy enough for Caterpillar to discover this Solicitation document since the DOE says that, in response to your proposal in answer to that solicitation, the DOE gave Caterpillar and two other engine companies $40 million divided between the three. If, nonetheless, you still require a copy of this Solicitation, kindly let us know and we will provide you with such copy.

In spite of the assertions and denials of either party, the facts will eventually become clear. At this stage, Entec states its lack of concession and acquiescence in the statements and positions of your letter, and reserves to itself the right to continue investigation and analysis as facts become more available and reserves to itself the right to continue or to restate its positions at some future date. We must and will, until it is learned otherwise, trust that your statements have been in good faith and have not been made to establish or continue any "cover up".

We write to continue good faith discussions and to offer again a license to Caterpillar for the ENTEC technology on mutually acceptable terms. Whether Caterpillar is using only the ENTEC technology disclosed in Entec's U.S. Patent Application of May 23, 1997 (which is covered by numerous Patents and allowed applications worldwide), or Entec's subsequent discoveries as well, Caterpillar will want to enter into a license agreement (i) because of Caterpillar's use of the ENTEC technology (including the '550 patent and other patents and allowed applications), and (ii) because Entec better understands its technology which can be used to produce far greater engine improvements than those already demonstrated.

We welcome your early contact.

With kind regards,

Sincerely,

Wendell R. Bird, P.C
Bird & Loechl, LLC

Mark P. Miller
Bird & Loechl, LLC

cc: Entec Corporation
Louis T. Isaf, Esq., Womble Carlyle Sandridge & Rice

Entec Keith Roberson

E-FILED
Thursday, 09 February, 2006 05:20:43 PM
Clerk, U.S. District Court, ILCD

Bird & Loechl
A LIMITED LIABILITY COMPANY‡
ATTORNEYS AT LAW
1150 MONARCH PLAZA
3414 PEACHTREE ROAD, NORTHEAST
ATLANTA, GEORGIA 30326
(404) 264-9400

WENDELL R. BIRD*, P.C.
RICHARD L. BRITTAIN†
KEVIN J. LOECHL**
JONATHAN T. McCANTS***
MARK P. MILLER****
KEVIN C. WATTERS

THOMAS O. KOTOUC*****
RUSSELL P. REACH†******

FACSIMILE: (404) 365-9731
E-MAIL: INFO@BIRDLAWFIRM.COM
WEB SITE: WWW.BIRDLAWFIRM.COM

*ALSO ADMITTED IN FLORIDA, ALABAMA AND CALIFORNIA
**ALSO ADMITTED IN ILLINOIS
***ALSO ADMITTED IN MISSISSIPPI
****ADMITTED IN VIRGINIA
*****ALSO ADMITTED IN ALABAMA, NEBRASKA AND SOUTH CAROLINA
******ALSO ADMITTED IN SOUTH CAROLINA
†OF COUNSEL
‡PROFESSIONAL CORPORATIONS

May 31, 2004

Via Certified Mail 7003 2260 0005 5438 2584

Mr. Keith P. Roberson
Senior Intellectual Property Attorney
Caterpillar, Inc.
100 Northeast Adams Street
Peoria, Illinois 61629-6409

CFD JJL ✓
6-8-04

RE: Entec Technology

Dear Mr. Roberson:

On behalf of Entec Engine Corporation, which we and Womble Carlyle Sandridge & Rice represent, we write in response to your letter of January 27, 2004, in continuance of the ongoing exchange of correspondence between Entec and Caterpillar Corporation.

This letter is primarily written to belie any erroneous assumption that Entec might acquiesce in the positions of Caterpillar expressed in that letter and your earlier communications with this firm.

Entec has offered, and remains willing, to enter negotiations with the goal of granting to Caterpillar a license under existing and future Entec patents. Entec continues to pursue continuing patent applications to further claim the inventions disclosed in the specifications of its '550 patent. A license may include all existing and resulting patents, if Caterpillar acts in good faith to take advantage of the opportunity to license.

We believe Caterpillar's attorneys are far better positioned to know the full extent of the Caterpillar technology, since they know the manner in which the Caterpillar technology has been implemented, and since they are quite capable of reading the Entec specifications to discover if Caterpillar is practicing technology for which Entec may be entitled to patent protection and/or which has been misappropriated from Entec. Therefore, rather than your deflecting this offer again by imposing on Entec the challenge to provide "line and verse," we invite you to provide us with a detailed analysis of why you consider, if you do consider, the Caterpillar technology not to incorporate or use the Entec technology disclosed in the Entec '559 specifications.

We hope that you will seriously enter into licensing discussions in good faith, and look forward to your contact.

With kind regards,

Sincerely,

Wendell R. Bird, P.C
Bird & Loechl, LLC

Mark P. Miller
Bird & Loechl, LLC

cc: Entec Corporation
Louis T. Isaf, Esq., Womble Carlyle Sandridge & Rice

E-FILED
Thursday, 09 February, 2006 05:20:58 PM
Clerk, U.S. District Court, ILCD

WOMBLE CARLYLE SANDRIDGE & RICE
A PROFESSIONAL LIMITED LIABILITY COMPANY

One Atlantic Center
1201 West Peachtree Street
Suite 3500
Atlanta, GA 30309

Telephone: (404) 872-7000
Fax: (404) 888-7490
Web site: www.wcsr.com

Louis T. Isaf
Of Counsel
Direct Dial: (404) 962-7523
Direct Fax: (404) 870-8173
E-Mail: lisaf@wcsr.com

September 23, 2004

Keith Roberson, Esq.
Senior Intellectual Property Attorney
Caterpillar, Inc.
100 Northeast Adams Street
Peoria, Il 61629-6409

Via Federal Express
#844907422234

Dear Mr. Roberson:

As you know, this law firm is patent counsel to Entec Engine Corporation. I note that the last correspondence in your communication exchange related to Entec was a May 31, 2004, letter from Entec's counsel, Bird & Loechl, to you. I write now in furtherance of that exchange.

By letter dated January 27, 2004, to Bird & Loechl, you provided Entec with copies of Caterpillar's U.S. patent applications relating to its "serially turbo charged ACERT technology engines." We understand Caterpillar's position is that these patent applications accurately describe the methods and apparatus used by Caterpillar in these engines. We also are aware that these applications have issued as U.S. Patents Nos. 6,651,618 and 6,688,280, respectively, to Caterpillar.

As you perhaps already know, we recently filed, on behalf of Entec, Requests for Reexamination in each of Caterpillar's above-referenced U.S. patents. I have attached courtesy copies of the Requests (without the therein-referenced patents and prior art). We are confident that the U.S. Patent Office will reject and seriously restrict the claims of both the '618 Patent and the '280 Patent.

Once again, Entec invites Caterpillar to sit down in good faith and with earnest to negotiate a license from Entec. Understandably, Entec will be more inclined to grant better licensing terms in the near term than in the distant future.

I welcome your call to begin a licensing dialog .

Very truly yours,

Louis T. Isaf

Enclosures
cc: Entec Engine Corporation
Wendell R. Bird, Esq.

RECEIVED
OCT 0 5 2004
Solar Turbines
Legal Services

E-FILED
Thursday, 09 February, 2006 05:21:20 PM
Clerk, U.S. District Court, ILCD

CATERPILLAR®

Caterpillar Inc.
100 NE Adams Street
Peoria, Illinois 61629

December 21, 2005

VIA FACSIMILE
Hardcopy by Express Mail

Entec Engine Corporation
Attn: Clyde C. Bryant
410 Trammell Drive
Atlanta, GA 30004

Dear Clyde,

Thank you for meeting with us in Florida on December 14. We appreciate the opportunity to share our views regarding Entec's technology and patents, as well as your willingness to share Entec's views. In particular, we appreciate your willingness to explain Entec's views on both the royalty base and royalty rate for payment to resolve the dispute over Entec's claims.

We particularly appreciate Entec's willingness to accept our view that it would be inappropriate to use the value of vehicles containing Caterpillar engines as a royalty base. Nonetheless, we continue to believe that it would also be inappropriate to use the entire value of Caterpillar's ACERT® engines as a royalty base. As we explained in our first meeting, the "technology" that Entec suggests it contributed to the Caterpillar ACERT® engines, if indeed it did so, is not the entire basis for consumer demand for those engines. The consumer demand for those engines derives from many features contributed by Caterpillar that are separate from the technology Entec claims as its own, as well as the huge investment in manufacturing and development made by Caterpillar to bring the engines to market. Accordingly, the value or profit that Caterpillar obtains from those engines must be apportioned downward to a fraction that represents the value or profit arguably attributable to the "technology" that Entec claims to have contributed.

We also disagree with the royalty rate Entec has proposed. Entec's proposed royalty rate is simply not supported by industry practice, particularly because many innovations go into each of Caterpillar's ACERT engines. As with royalty base, Entec's royalty rate ignores Caterpillar's considerable investments.

Nonetheless, for discussion purposes, we calculated the amount of Entec's offer using the royalty base and rate information you provided. The result of that calculation is that Caterpillar's and Entec's views of the value of Entec's patent infringement and trade secret misappropriation claims differ by more than three orders of magnitude. Moreover, the parties' gap in positions goes well beyond the royalty issues.

Entec continues to allege that it has imparted and will impart "technology" to Caterpillar, even though Entec has provided Caterpillar no "technology" and Entec has confined any offer of "technology" to that disclosed in its patents and patent applications. And, as we have explained, Caterpillar does not believe it has misappropriated any trade secret information from Entec and does not believe that it is infringing any valid and enforceable claims of Entec's patents.

Because the parties disagree so fundamentally over the very nature of the dispute and the magnitude of payment to fairly resolve that dispute, Caterpillar has regretfully concluded that further negotiations would not be fruitful. Rather, we believe a court will need to help the parties reach a common understanding of the nature of the dispute and the merits of Entec's patent infringement and trade secret misappropriation claims. Accordingly, Caterpillar hereby terminates the settlement negotiations with Entec and has authorized counsel to file a declaratory judgment action seeking to quickly and fairly resolve Entec's patent infringement and trade secret misappropriation claims.

Thank you again for your courtesy and cooperation throughout our discussions. Please call me if you have any questions.

Very truly yours,

Bill Berlinger
(KSW)

Willibald G. Berlinger
Corporate Licensing Manager

Telephone: 309/675-4956
Fax: 309/675-4575

Cc: Louis Isaf
Wendell Bird

E-FILED
Thursday, 09 February, 2006 05:21:45 PM
Clerk, U.S. District Court, ILCD

UNITED STATES DISTRICT COURT
FOR THE CENTRAL DISTRICT OF ILLINOIS

CATERPILLAR INC. Plaintiff, v. ENTEC ENGINE CORPORATION, a corporation; and CLYDE C. BRYANT, an individual, Defendants.	Civil Action File No. 1:05-cvp01394-MMM-JAG

DECLARATION OF KATHY WEISS IN SUPPORT OF OPPOSITION BY PLAINTIFF CATERPILLAR INC. TO DEFENDANTS' MOTION TO DISMISS

I, Kathy Weiss, declare:

1. I am an administrative assistant in the Intellectual Property department of Caterpillar Inc.

2. I transmitted a letter to Clyde C. Bryant dated December 21, 2005 by facsimile on a fax machine at 9:58 a.m., Central Standard Time on December 21, 2005. A true and correct copy of this letter is attached hereto as Exhibit WD1.

3. The time stamp on the fax machine I used to transmit the letter had not been re-set from Daylight Savings Time back to Central Standard Time, and so it was one hour fast on December 21, 2005 when I faxed the letter.

4. Attached to this declaration as Exhibit WD2 is a true and correct copy of my memorandum to file regarding the incorrect time setting on the fax machine I used to transmit the letter.

I declare under penalty of perjury under the laws of the United States that the foregoing is true and correct, and that this Declaration was executed this 9th day of February 2006 at Peoria, Illinois.

Kathy Weiss

Kathy Weiss

E-FILED
Thursday, 09 February, 2006 05:22:19 PM
Clerk, U.S. District Court, ILCD

CATERPILLAR®

Caterpillar Inc.
100 NE Adams Street
Peoria, Illinois 61629

December 21, 2005

VIA FACSIMILE
Hardcopy by Express Mail

Entec Engine Corporation
Attn: Clyde C. Bryant
410 Trammell Drive
Atlanta, GA 30004

Dear Clyde,

Thank you for meeting with us in Florida on December 14. We appreciate the opportunity to share our views regarding Entec's technology and patents, as well as your willingness to share Entec's views. In particular, we appreciate your willingness to explain Entec's views on both the royalty base and royalty rate for payment to resolve the dispute over Entec's claims.

We particularly appreciate Entec's willingness to accept our view that it would be inappropriate to use the value of vehicles containing Caterpillar engines as a royalty base. Nonetheless, we continue to believe that it would also be inappropriate to use the entire value of Caterpillar's ACERT® engines as a royalty base. As we explained in our first meeting, the "technology" that Entec suggests it contributed to the Caterpillar ACERT® engines, if indeed it did so, is not the entire basis for consumer demand for those engines. The consumer demand for those engines derives from many features contributed by Caterpillar that are separate from the technology Entec claims as its own, as well as the huge investment in manufacturing and development made by Caterpillar to bring the engines to market. Accordingly, the value or profit that Caterpillar obtains from those engines must be apportioned downward to a fraction that represents the value or profit arguably attributable to the "technology" that Entec claims to have contributed.

We also disagree with the royalty rate Entec has proposed. Entec's proposed royalty rate is simply not supported by industry practice, particularly because many innovations go into each of Caterpillar's ACERT engines. As with royalty base, Entec's royalty rate ignores Caterpillar's considerable investments.

Nonetheless, for discussion purposes, we calculated the amount of Entec's offer using the royalty base and rate information you provided. The result of that calculation is that Caterpillar's and Entec's views of the value of Entec's patent infringement and trade secret misappropriation claims differ by more than three orders of magnitude. Moreover, the parties' gap in positions goes well beyond the royalty issues.

Entec continues to allege that it has imparted and will impart "technology" to Caterpillar, even though Entec has provided Caterpillar no "technology" and Entec has confined any offer of "technology" to that disclosed in its patents and patent applications. And, as we have explained, Caterpillar does not believe it has misappropriated any trade secret information from Entec and does not believe that it is infringing any valid and enforceable claims of Entec's patents.

Because the parties disagree so fundamentally over the very nature of the dispute and the magnitude of payment to fairly resolve that dispute, Caterpillar has regretfully concluded that further negotiations would not be fruitful. Rather, we believe a court will need to help the parties reach a common understanding of the nature of the dispute and the merits of Entec's patent infringement and trade secret misappropriation claims. Accordingly, Caterpillar hereby terminates the settlement negotiations with Entec and has authorized counsel to file a declaratory judgment action seeking to quickly and fairly resolve Entec's patent infringement and trade secret misappropriation claims.

Thank you again for your courtesy and cooperation throughout our discussions. Please call me if you have any questions.

Very truly yours,

Bill Berlinger
(KSW)

Willibald G. Berlinger
Corporate Licensing Manager

Telephone: 309/675-4956
Fax: 309/675-4575

Cc: Louis Isaf
Wendell Bird

E-FILED
Thursday, 09 February, 2006 05:22:33 PM
Clerk, U.S. District Court, ILCD

December 22, 2005

To: Entec File:

The fax machine (309/675-1236) located in the Admin Building, 6th Floor, D Wing, was not set from Daylight Savings Time to Central Standard Time and is 1 hour fast as of Thursday, December 22, 2005. A call has been made to the help desk to have the time reset so it is correct.

Kathy Weiss

E-FILED
Thursday, 09 February, 2006 05:22:58 PM
Clerk, U.S. District Court, ILCD

UNITED STATES DISTRICT COURT
FOR THE CENTRAL DISTRICT OF ILLINOIS

CATERPILLAR INC. Plaintiff, v. ENTEC ENGINE CORPORATION, a corporation; and CLYDE C. BRYANT, an individual, Defendants.	Civil Action File No. 1:05-cvp01394-MMM-JAG

DECLARATION OF MICHAEL J. STIMSON IN SUPPORT OF CATERPILLAR INC.'S OPPOSITION TO DEFENDANTS' MOTION TO DISMISS

Pursuant to Federal Rule of Evidence 902(5), the following exhibits are believed to be self-authenticating:

1. Entec's Request for *Inter Partes* Reexamination of Caterpillar's U.S. Patent No. 6,688,280 (reexamination serial no. 95/000050), as received in the United States Patent and Trademark Office ("USPTO"), a true and correct copy of which is attached hereto as Exhibit PF (Published online at http://portal.uspto.gov/external/portal/!ut/p/_s.7_0_A/7_0_CH/.cmd/ad/.ar/sa.getBib/.c/6_0_69/.ce/7_0_1ET/.p/5_0_18L/.d/1?selectedTab=ifwtab&isSubmitted=isSubmitted&dosnum=95000050);

2. Entec's Request for *Inter Partes* Reexamination of Caterpillar's U.S. Patent No. 6,651,618 (reexamination serial no. 95/000049), as received in the USPTO, at true and correct copy of which is attached hereto as Exhibit PG (Published online at http://portal.uspto.gov/external/portal/!ut/p/_s.7_0_A/7_0_CH/.cmd/ad/.ar/sa.getBib/.c/6_0_69/.ce/7_0_1ET/.p/5_0_18L/.d/3?selectedTab=ifwtab&isSubmitted=isSubmitted&dosnum=95000049);

3. United States Patent No. 6,279,550, a true and correct copy of which is attached hereto as Exhibit PH;

4. United States Patent No. 6,951,211, a true and correct copy of which is attached hereto as Exhibit PI;

5. International Patent Application Publication No. WO 98/02653, a true and correct copy of which is attached hereto as Exhibit PJ;

6. USPTO's Action Closing Reexamination serial no. 95/000050, a true and correct copy of which is attached hereto as Exhibit PK (Published online at http://portal.uspto.gov/external/portal/!ut/p/_s.7_0_A/7_0_CH/.cmd/ad/.ar/sa.getBib/.c/6_0_69/.ce/7_0_1ET/.p/5_0_18L/.d/1?selectedTab=ifwtab&isSubmitted=isSubmitted&dosnum=95000050);

7. USPTO's Action Closing Reexamination serial no. 95/000049, a true and correct copy of which is attached hereto as Exhibit PL (Published online at http://portal.uspto.gov/external/portal/!ut/p/_s.7_0_A/7_0_CH/.cmd/ad/.ar/sa.getBib/.c/6_0_69/.ce/7_0_1ET/.p/5_0_18L/.d/3?selectedTab=ifwtab&isSubmitted=isSubmitted&dosnum=95000049);

8. United States Patent and Trademark Office Performance and Accountability Report for Fiscal Year 2005, a true and correct copy of which is attached hereto as Exhibit PM (Published online at http://www.uspto.gov/web/offices/com/annual/2005/2005annualreport.pdf).

I declare under penalty of perjury under the laws of the United States that the foregoing is true and correct, and that this Declaration was executed this 8th day of February 2006 at Irvine, California.

Michael J. Stimson

E-FILED
Thursday, 09 February, 2006 05:23:36 PM
Clerk, U.S. District Court, ILCD

OIPE JC61
SEP 17 2004
PATENT & TRADEMARK OFFICE

09/20/04

RE-EXAM 66548 U.S.PTO 95000050

09/17/04

Approved for use through 04/30/2007. OMB 0651-0033
U.S. Patent and Trademark Office; U.S. DEPARTMENT OF COMMERCE
Under the Paperwork Reduction Act of 1995, no persons are required to respond to a collection of information unless it displays a valid OMB control number.

(Also referred to as FORM PTO-1465)

REQUEST FOR *INTER PARTES* REEXAMINATION TRANSMITTAL FORM

Address to:
Mail Stop *Inter Partes* Reexam
Commissioner for Patents
P. O. Box 1450
Alexandria, VA 22313-1450

66548 U.S.PTO
09/17/04

Attorney Docket No. E025 7002

Date: 9-17-04

1. [X] This is a request for *inter partes* reexamination pursuant to 37 CFR 1.913 of patent number 6,688,280 B2 issued Feb. 10, 2004. The request is made by a third party requester, identified herein below.

2. [X] a. The name and address of the person requesting reexamination is:

Entec Engine Corporation
410 Trammell Drive
Atlanta, Georgia 30004

b. The real party in interest (37 CFR 1.915(b)(8)) is: Clyde C. Bryant

3. [ ] a. A check in the amount of $ _____ is enclosed to cover the reexamination fee, 37 CFR 1.20(c)(2);

[X] b. The Director is hereby authorized to charge the fee as set forth in 37 CFR 1.20(c)(2) to Deposit Account No. 09-0528 (submit duplicate of this form for fee processing); or

[ ] c. Payment by credit card. Form PTO-2038 is attached.

4. [X] Any refund should be made by [ ] check or [X] credit to Deposit Account No. 09-0528. 37 CFR 1.26(c). If payment is made by credit card, refund must be made to credit card account.

5. [X] A copy of the patent to be reexamined having a double column format on one side of a separate paper is enclosed. 37 CFR 1.915(b)(5)

6. [ ] CD-ROM or CD-R in duplicate, Computer Program (Appendix) or large table

7. [ ] Nucleotide and/or Amino Acid Sequence Submission
If applicable, all of the following are necessary

a. [ ] Computer Readable Form (CRF)
b. Specification Sequence Listing on:
i [ ] CD-ROM (2 copies) or CD-R (2 copies); or
ii [ ] paper
c. [ ] Statements verifying identity of above copies

8. [ ] A copy of any disclaimer, certificate of correction or reexamination certificate issued in the patent is included.

9. [X] Reexamination of claim(s) 1 to 16 and 21 to 33 is requested.

10. [X] A copy of every patent or printed publication relied upon is submitted herewith including a listing thereof on Form PTO-1449 or equivalent.

11. [ ] An English language translation of all necessary and pertinent non-English language patents and/or printed publications is included.

09/21/2004 HTHUITT 00000001 095528 95000050
01 FC:1813 8000.00 DA

This collection of information is required by 37 CFR 1.915. The information is required to obtain or retain a benefit by the public which is to file (and by the USPTO to process) an application. Confidentiality is governed by 35 U.S.C. 122 and 37 CFR 1.14. This collection is estimated to take 2 hours to complete, including gathering, preparing, and submitting the completed application form to the USPTO. Time will vary depending upon the individual case. Any comments on the amount of time you require to complete this form and/or suggestions for reducing this burden, should be sent to the Chief Information Officer, U.S. Patent and Trademark Office, U.S. Department of Commerce, P.O. Box 1450, Alexandria, VA 22313-1450. DO NOT SEND FEES OR COMPLETED FORMS TO THIS ADDRESS. **SEND TO: Mail Stop *Inter Partes* Reexam, Commissioner for Patents, P.O. Box 1450, Alexandria, VA 22313-1450.**

If you need assistance in completing the form, call 1-800-PTO-9199 and select option 2.

PTO/SB/58 (04-04)
Approved for use through 4/30/2007. OMB 0651-0033
U.S. Patent and Trademark Office; U.S. DEPARTMENT OF COMMERCE
Under the Paperwork Reduction Act of 1995, no persons are required to respond to a collection of information unless it displays a valid OMB control number.

12. [X] The attached detailed request includes at least the following items:

a. A statement identifying each substantial new question of patentability based on prior patents and printed publications. 37 CFR 1.915(b)(3)
b. An identification of every claim for which reexamination is requested, and a detailed explanation of the pertinency and manner of applying the cited art to every claim for which reexamination is requested. 37 CFR 1.915(b)(1) and (3)

13. [X] It is certified that the estoppel provisions of 37 CFR 1.907 do not prohibit this reexamination. 37 CFR 1.915(b)(7)

14. [X] a. It is certified that a copy of this request has been served in its entirety on the patent owner as provided in 37 CFR 1.33(c).
The name and address of the party served and the date of service are:
Dennis C. Skarvan, Caterpillar, Inc.
Intellectual Property Department, AB6490
100 N.E. Adams Street, Peoria, Illinois 61629-6490
Date of Service: Sept. 17, 2004; or

[ ] b. A duplicate copy is enclosed since service on patent owner was not possible.

15. Correspondence Address: Direct all communications about the application to:

[X] Customer Number: 26158

OR

[ ] Firm or Individual Name					
Address (line 1)					
Address (line 2)					
City		State		Zip	
Country					
Telephone		Fax			

16. [ ] The patent is currently the subject of the following concurrent proceeding(s):
[ ] a. Copending reissue Application No. _____.
[ ] b. Copending reexamination Control No. _____.
[ ] c. Copending Interference No. _____.
[ ] d. Copending litigation styled:

_____

_____

WARNING: Information on this form may become public. Credit card information should not be included on this form. Provide credit card information and authorization on PTO-2038.

Authorized Signature For Third Party Requester — *Date*: Sept 17, 2004

Louis T. Isaf — *Typed/Printed Name*

29,078 — *Registration Number, if applicable*

OIPE JC61
SEP 17 2004
PATENT & TRADEMARK OFFICE

Attachment to Request for
Inter Partes Reexamination Transmittal Form,
providing information as to
Patent No. 6,688,280 B2

Sir:

Inter Partes reexamination under 35 U.S.C. §§311 to 318 and 37 CFR 1.913 is requested of United States Patent No. 6,688,280 B2, titled AIR AND FUEL SUPPLY SYSTEM FOR COMBUSTION ENGINE, which issued on February 10, 2004, to James Richard Weber, *et al.*, from an application filed on May 14, 2002.

A. Claims for Which Reexamination Is Requested

Reexamination is requested of:

(1) Claims 1 – 6, 10, and 21 – 33 of the Weber patent in view of the earlier Bryant published PCT application, WO 98/02653.

(2) Claims 7 - 12 of the Weber patent in view of the earlier Bryant published PCT application WO 98/02653 in view of earlier U.S. Patent 3,250,068 to Vulliamy, or the earlier Challen et al. publication.

(3) Claims 13 – 16 of the Weber patent in view of the earlier Bryant published PCT application WO 98/02653 in view of earlier U.S. Patent 5,445,128 to Letang et al.

(4) Claim 14 of the Weber patent in view of the earlier Bryant published PCT application WO 98/02653 in view of earlier U.S. Patent 5,445,128 to Letang et al., further in view of earlier U.S. Patent 6,301,889 to Gladden et al., or the earlier Challen et al. publication.

(5) Claims 23, 24 and 31 – 33 of the Weber patent in view of the earlier Bryant published PCT application WO 98/02653 in view of the earlier Obert publication.

The above-noted references are listed on the attached Information Disclosure form, and a copy of each is enclosed.

[redacted]

B. Explanation of Pertinency and Manner of Applying Cited Prior Art to Every Claim for Which Reexamination Is Requested

(1) Claims 1 - 6 and 21 – 33 of the Weber patent are considered to be anticipated by the Bryant published PCT application, under 35 USC 102(b). The following sets forth these claims and explains how the Bryant PCT application discloses all the recited features thereof.

Weber Claim	Bryant Disclosure
1. A method of operating an internal combustion engine including at least one cylinder and a piston slidable in the cylinder, the method comprising:	Engine 100 has cylinders 7a-7f with pistons 22a-22f slidable therein.
supplying pressurized air from an intake manifold to an air intake port of a combustion chamber in the cylinder;	Pressurized air is supplied from intake manifolds 13, 14 to intake ports of the combustion chamber (p. 17, l. 11-15; Figs. 1 & 2).
selectively operating an air intake valve to open the air intake port to allow pressurized air to flow between the combustion chamber and the intake manifold substantially during a majority portion of a compression stroke of the piston; and	Intake valves 16, 16' control the intake port. During "perhaps 50% or more of the compression stroke," intake valve 16 is held open so that compressed air flows back from the combustion chamber into intake manifold 13 or 14 (p. 21, l. 18-24). Since the intake valve may be held open for more than 50% of the compression stroke (p. 21, l. 21-22) there will be flow during a majority portion of the compression stroke.
operably controlling a fuel supply system to inject fuel into the combustion chamber after the intake valve is closed	Fuel can be injected after the intake valve is closed (p. 23, l. 26-30).
2. The method of claim 1, wherein said selectively operating includes operating a variable intake valve closing mechanism to keep the intake valve open.	A variable valve timing system can control the times of opening and closing intake valves 16, 16' (p. 18, l.26 – p. 19, l.1).
3. The method of claim 2, wherein the variable intake valve closing mechanism is operated at least one of hydraulically, pneumatically, mechanically, and electronically.	The variable valve timing system is electronic, i.e., it includes a control system such as an ECM (p. 18, l.26 – p. 19, l.1).

[redacted]

Weber Claim	Bryant Disclosure
4. The method of claim 1, wherein the selective operation of the air intake valve is based on at least one engine condition.	Intake valves 16, 16' are operated by camshafts 21, which are driven at one-half the engine speed (an engine condition) (p. 17, l. 21-24).
5. The method of claim 1, wherein said selectively operating includes operating the intake valve to remain open for a portion of a second half of the compression stroke of the piston.	The intake valve is held open for perhaps 50% or more of the compression stroke (p. 21, l. 18-22), and therefore would be open during a portion of the second half of the compression stroke.
6. The method of claim 1, wherein said operably controlling a fuel supply system includes operating a fuel injector assembly at least one of hydraulically, mechanically, and electronically.	The fuel injection system of any of the engines disclosed may be controlled (electronically) by control unit 144 sending messages through lines 146, 146b (p. 113, l. 16-25; Fig. 35).*
21. A method of controlling an internal combustion engine having a variable compression ratio, said engine having a block defining a cylinder, a piston slidable in said cylinder, a head connected with said block, said piston, said cylinder, and said head defining a combustion chamber, the method comprising:	Engine 100 has a block with cylinders 22a-22f, pistons 7a-7f sliding in the cylinders, and a head, defining a combustion chamber (p. 7, l. 6-8; p. 16, l. 29). A variable valve timing system can control the times of opening and closing the intake valves 16, 16' (p. 18, l. 26 – p. 19, l. 1), and this will vary the compression ratio (p. 20, l. 7-9; p. 23, l. 19-22).
pressurizing air;	Air is compressed and supplied from intake manifolds 13, 14 to the intake ports (Figs. 1 & 2; p. 17, l. 11-15).
supplying said air to an intake manifold of the engine;	
maintaining fluid communication between said combustion chamber and the intake manifold during a portion of an intake stroke and through a predetermined portion of a compression stroke; and	The intake valve 16 is open during a portion of the intake stroke and a portion of the compression stroke (p. 19, l. 23-29), allowing fluid communication between the combustion chamber and the intake manifold.
supplying a pressurized fuel directly to the combustion chamber during a portion of a combustion stroke.	Fuel may be injected directly into the combustion chamber during the first part of the combustion (expansion) stroke (p. 23, l. 28-29; p. 24, l. 3-5).

* Although Bryant's disclosure of electronic control of the fuel injection system is sufficient to anticipate the Markush group recited in claim 6, it is noted that the Challen et al. publication discloses hydraulic, mechanical and electronic operation of fuel injectors on pages 263 to 305.

Weber Claim	Bryant Disclosure
22. The method of claim 21, further including supplying the pressurized fuel during a portion of the compression stroke.	Fuel should be injected "at or after the piston 22 has reached a point x and the intake valve is closed" (p. 23, l. 29-30). This is during the compression stroke (p. 23, l. 19-22).
23. The method of claim 22, wherein supplying the pressurized fuel includes supplying a pilot injection at a predetermined crank angle before a main injection.	Fuel is injected after the intake valve closes, and can also be injected later (p. 23, l. 29 – p. 24, l. 3), so that the initial injection of fuel would be a pilot injection, as recited in the claim.
24. The method of claim 23, wherein said main injection begins during the compression stroke.	See claim 22.
25. The method of claim 21, wherein said predetermined portion of the compression stroke is at least a majority of the compression stroke.	The intake valve may be held open for more than 50% of the compression stroke, during which time compressed air flows back from the combustion chamber into intake manifold 13 or 14 (p. 21, l. 18-24).
26. The method of claim 21, wherein said pressurizing includes a first stage of pressurization and a second stage of pressurization.	The air may be pressurized in two stages by compressors 1 and 2. There is an intercooler 10 between compressors 1 and 2, and intercoolers 11, 12 between compressor 2 and intake manifolds 13, 14 (p. 22, l. 26 – p. 23, l. 7; Fig. 2).
27. The method of claim 26, further including cooling air between said first stage of pressurization and second stage of pressurization.	Ditto.
28. The method of claim 21, further including cooling the pressurized air.	Ditto.
29. A method of controlling an internal combustion engine having a variable compression ratio, said engine having a block defining a cylinder, a piston slidable in said cylinder, a head connected with said block, said piston, said cylinder, and said head defining a combustion chamber, the method comprising:	See claims 21 and 25. The recited ratio of at least 4:1 is disclosed at p. 23, l. 13-14 ("the intake charge can be boosted in pressure by as much as 4-5 atmospheres").

Weber Claim	Bryant Disclosure
pressurizing air to a ratio of at least 4:1 with respect to atmospheric pressure; supplying the pressurized air to an intake manifold of the engine; maintaining fluid communication between the combustion chamber and the intake manifold during an intake stroke and a majority of a compression stroke; and supplying a fuel to the combustion chamber during at least a portion of the remaining compression stroke.	
30. The method of claim 29, wherein said majority is at least 90 degrees crank angle after bottom dead center.	Since the intake valve 16 is held open through the intake stroke, past bottom dead center, and to perhaps 50% or more of the compression stroke (p. 21, l. 18-22), it necessarily would be open for at least 90 degrees crank angle past bottom dead center.
31. The method of claim 29, wherein said supplying fuel includes injecting a first portion of fuel a predetermined period prior to injecting a second portion of fuel.	Fuel is injected after the intake valve closes, and can also be injected later (p. 23, l. 29 – p. 24, l. 3).
32. The method of claim 31, wherein said injecting the second portion of fuel begins during the compression stroke and terminates during a combustion stroke.	Some fuel can be injected after top dead center, during the first part of the expansion (combustion) stroke (p. 24, l. 3-5).
33. The method of claim 31, further including cooling the air prior to supplying the air to the combustion chamber.	See claim 28.

(2) Claims 7 - 12 of the Weber patent are considered to be unpatentable over the Bryant published PCT application in view of the Vulliamy patent or the Challen et al. publication, under 35 USC 103(a).

It is evident, as set forth above, that Bryant discloses the majority of the method recited in Weber claim 7, including a (second) compressor 1 which compresses air drawn from atmosphere

and a (first) compressor 2 which receives air from the second compressor and supplies it to an air intake port of a combustion chamber via intake manifolds 13, 14 (p. 22, l. 26 – p. 23, l. 23; Fig. 2). With regard to the compressors usable with his engine, Bryant discloses at p. 18, l. 8-13, that "Whereas, the ancillary compressor 1 and second ancillary compressor 2 of the various embodiments are depicted throughout as a reciprocating compressor or a rotary compressor, it is noted that the invention is not limited by the type of compressor utilized for each; and the depicted compressors may be interchanged, or may be the same, or may be other types of compressors performing the functions described herein." Bryant further discloses at p. 47, l. 2-5, that in Fig. 7 the secondary compressor 1 "is a rotary compressor of the turbo type," i.e., a turbocharger. Compressor 1 is shown both in Fig. 2 and Fig. 7 as being rotated by a turbine which is driven by the exhaust from the engine through conduit 18.

The first four steps of Weber claim 7 are:

> imparting rotational movement to a first turbine and a first compressor of a first turbocharger with exhaust air flowing from an exhaust port of the cylinder;
>
> imparting rotational movement to a second turbine and a second compressor of a second turbocharger with exhaust air flowing from an exhaust duct of the first turbocharger;
>
> compressing air drawn from atmosphere with the second compressor;
>
> compressing air received from the second compressor with the first compressor;

Apparatus performing these four steps is disclosed by Vulliamy, which shows rotating a first turbine 8 and first compressor 7 of a first turbocharger with exhaust air flowing through exhaust manifold 3 from the exhaust ports of engine 1, rotating a second turbine 14 and second compressor 4 of a second turbocharger with exhaust air flowing from the exhaust duct 10 of the first turbocharger, compressing air drawn from atmosphere through filter 5 with the second compressor 4, and compressing air received from the second compressor 4 with the first compressor 7, the pressurized air then passing to engine 1 via intake manifold 2. Vulliamy further discloses the advantages of this arrangement at col. 3, line 40 et seq.

The Challen et al. publication discloses a similar arrangement of turbochargers in Fig. 3.1(b), p. 75, and discloses the advantages of two-stage turbocharging in section 3.5.1, p. 84.

In view of Bryant's suggestion that various types of compressors may be used for the two compressors 1 and 2 of his engine, and the teachings of Vulliamy and/or Challen et al. of the advantages of using two turbochargers arranged in accordance with the method recited in Weber claim 7, it would have been obvious to one of ordinary skill in the art to utilize such an arrangement for the two compressors employed with Bryant's disclosed engine.

Weber dependent claims 8 - 12 read on Bryant's disclosure as follows:

Weber Claim	Bryant Disclosure
8. The method of claim 7, wherein fuel injection begins during the compression stroke.	Fuel can be injected at or after the piston 22 has reached point x and the intake valve is closed (p. 23, l. 29-30), which is during the compression stroke.
9. The method of claim 7, wherein said selectively operating includes operating a variable intake valve closing mechanism to interrupt cyclical movement of the intake valve.	See claim 2. Varying the intake valve operation would necessarily interrupt its cyclical movement.
10. The method of claim 7, wherein the selective operation of the air intake valve is based on at least one engine condition.	See claim 4.
11. The method of claim 7, wherein said selectively operating includes operating the intake valve to remain open for a portion of second half of the compression stroke of the piston.	See claim 5.
12. The method of claim 7, wherein said controllably operating a fuel supply system includes operating a fuel injection assembly at least one of hydraulically, mechanically, and electronically.	See claim 6 and the footnote on page 3.

(3) Claims 13 - 16 of the Weber patent are considered unpatentable over the Bryant published PCT application in view of the Letang et al. patent.

Weber claim 13 reads on the disclosure of Bryant as follows:

Weber Claim	Bryant Disclosure
13. An internal combustion engine, comprising:	
a block defining at least one cylinder;	Engine 100 has a cylinder block (p. 17, l. 7) with cylinders 7a-7f (Fig. 1).
a head connected with said block, said head having an air intake port and an exhaust port;	Head (p. 7, l. 7) has air intake ports and exhaust ports (.p. 16, l. 29 – p. 17, l. 2).
a piston slidable in each cylinder;	Pistons 22a-22f slide in cylinders 7a-7f (p. 16, l. 29).
an air intake valve controllably movable to open and close the air intake port;	Air intake valves 16, 16' open and close the air intake ports (p. 16, l. 30).
a first turbocharger including a first turbine coupled with a first compressor, the first turbine being in fluid communication with the exhaust port, the first compressor being in fluid communication with the air intake port;	Compressor 1 of Fig. 7 is a rotary compressor of the turbo type (p. 47, l. 2-5) the turbine of which is shown as being driven by the exhaust through line 18, i.e., it is a turbocharger, and the compressor 1 is in fluid communication with the air intake ports through conduits 104, 110, 111, and 121/122 (p. 22, l. 10-14).
a second compressor being in fluid communication with atmosphere and the first compressor;	Compressor 2 is in fluid communication with atmosphere and first compressor 1 through conduits 8, 101, 102, 104, 110.
a fuel supply system operable to controllably inject fuel into the combustion chamber; and	Fuel is injected into the combustion chamber (p. 23, l. 26-29).
a controller configured to selectively operate the air intake valve to remain open during a portion of a compression stroke of the piston;	A variable valve timing system, including a control system such as an ECM, can control the times of opening and closing intake valves 16, 16' (p. 18, l. 26 – p. 19, l. 1).
wherein the controller is configured to inject fuel into the combustion chamber during an combustion stroke.	The fuel injection system of any of the engines disclosed may be controlled (electronically) by control unit 144 sending messages through lines 146, 146b (p. 113, l. 16-25; Fig. 35).

The apparatus disclosed by Bryant differs from that recited in Weber claim 13 only in that Bryant discloses one controller (ECM) for the air intake valves, and another controller (unit 144) for the fuel injection system, whereas Weber claim 13 seemingly requires a single controller for both these functions, since it recites that "the controller" (configured to selectively operate the air intake valve) is configured to inject fuel into the combustion chamber. However, it is not considered that there is anything unobvious about using one controller to perform several functions, instead of several separate controllers. For example, the Letang et al. patent discloses an internal combustion engine having electronic controls for various engine functions, and states that it is desirable to replace independent stand-alone controllers with a comprehensive controller for several reasons, including reducing part proliferation and cost (col. 3, lines 15 to 24). In view of this disclosure of Letang et al., it would have been obvious to one of ordinary skill in the art to combine the ECM and control unit 144 of Bryant into a single controller in order to obtain the advantages thereof taught by Letang et al.

Weber dependent claims 14 - 16 read on Bryant's disclosure as follows:

Weber Claim	Bryant Disclosure
14. The engine of claim 13, wherein said second compressor is coupled with said first turbine.	Compressor 2 is "coupled with" the turbine of compressor 1 via conduits 110, 104, 102, 101, as broadly recited in this claim.
15. The engine of claim 13, wherein the controller is configured to operate the intake valve to remain open for a portion of a second half of the compression stroke of the piston.	See claim 5.
16. The engine of claim 13, wherein the fuel supply system includes a fuel injector assembly.	The injection of fuel into the combustion chamber (p. 23, l. 26-29) necessarily requires a fuel injector assembly. See also p. 90, l. 1 – p. 91, l. 19, and Fig. 21.

(4) Claim 14 of the Weber patent is considered unpatentable over the Bryant published PCT application in view of the Letang et al. patent, and further in view of either the Gladden et al. patent or the Challen et al. publication, under 35 USC 103(a).

As discussed above, it is considered that the expression "coupled with" in Weber claim 14 is so broad as to be readable on the apparatus disclosed by Bryant. However, if the examiner

deems that this expression requires some kind of drive connection between the second compressor and the first turbine, such an arrangement would have been obvious in view of either the Gladden et al. patent or the Challen et al. publication.

In part B(2) above, in connection with claims 7 - 12, it is pointed out that Bryant discloses two-stage compression by compressors 1 and 2; that the compressors may be of various types; and that compressor 1 is driven by a turbine.

The Gladden et al. patent discloses a turbocharger with a two-stage compressor for an engine 10, in which the two compressors 46, 48 are mounted on a single shaft 38 which is rotated by a single (first) turbine 24. Turbine 24 is driven by the exhaust gas from exhaust manifold 14. (Second) compressor 46 draws in ambient air through inlet 52, the compressed air is cooled at 68 and flows to (first) compressor 48, and then passes from compressor 48 through cooler 16 to intake manifold 18. In view of Gladden et al. it would have been obvious to one of ordinary skill in the art to employ the disclosed Gladden et al. turbocharger for the two compression stages in the Bryant apparatus, in order to obtain the desirable features of the two-stage turbocharger as disclosed at col. 5, line 13 et seq. of the Gladden et al. patent.

The Challen et al. publication states in section 6.11.1, page 146, that (emphasis added):

> There are a number of additional options here which a comprehensive model should cover. First there could be more than one stage of turbocharging, a low pressure compressor preceding a high pressure one, the LP compressor normally being on a common shaft with a LP turbine, the HP compressor similarly being linked to a HP turbine. Other combinations are possible, such as <u>two compressors linked to a single turbine</u> or vice versa.

In view of this disclosure of Challen et al., it would have been obvious to one of ordinary skill in the art to substitute "two compressors linked to a single turbine" for the two separate compressors disclosed as being utilized in the engine of Bryant. The above quotation from Challen et al. would have readily suggested to one of ordinary skill in the art that a possible combination which could be used in place of two separately-driven compressors would be "two compressors linked to a single turbine."

[redacted]

(5) Claims 23, 24 and 31 - 33 of the Weber patent are considered to be unpatentable over the Bryant published PCT application in view of the Obert publication, under 35 USC 103(a).

For the reasons given in part B(1) above, it is believed that the Bryant PCT application anticipates claims 23, 24 and 31 - 33 of the Weber patent. Nevertheless, if the examiner does not agree, it is considered that these claims are unpatentable over the Bryant PCT application in view of the Obert publication.

The Obert publication discloses at page 612 that fuel preconditioning, which includes pilot injection, has been advocated and practiced to some extent for many years, in order to obtain smoother combustion or to burn low-cetane fuels. On page 613, second paragraph, Obert states that "With *pilot injection*, a fraction of the fuel is injected early on the compressed stroke and followed, some crankshaft degrees later, by the main injection." Obert then shows in Fig. 15-37 pilot injection at 10 degrees before top dead center (bTDC), and the main injection at one degree bTDC, and states that "elimination of a knock (noise, shock) is a major accomplishment of fuel preconditioning." In view of this disclosure of Obert, it would have been obvious to one of ordinary skill in the art to utilize a pilot injection of fuel in the engine disclosed by Bryant in order to achieve the desirable results thereof taught by Obert. With regard to claim 23, it is noted that the pilot injection disclosed by Obert in Fig. 15-37 is at a predetermined crank angle before the main injection.

C. Statement Identifying Substantial New Question of Patentability

None of the prior art documents referred to above was of record in the file of the Weber patent, but the disclosure of Bryant patent 6,279,550 of record therein is equivalent to that of Bryant published PCT application WO 98/02653. Nevertheless, the Bryant '550 patent was only cited in an Information Disclosure Statement filed on September 2, 2003, with the applicants' response to the first Office action, was never employed by the examiner as a ground of rejection, and was never discussed, or even referred to, by applicants or the examiner. There is therefore

no indication that the grounds of unpatentability as set forth above were considered during prosecution of the Weber patent.

The prior art documents on which this reexamination request is based, and the Bryant published PCT application in particular, are closer to the subject matter claimed in the Weber patent than any prior art that was applied by the examiner during the prosecution of that patent, and provide teachings not provided by such applied prior art. Accordingly, a substantial new question of patentability is raised.

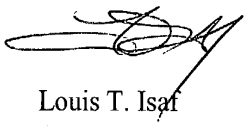

Louis T. Isaf
Attorney for Requester
Reg. No. 29,078

Womble Carlyle Sandridge & Rice, PLLC
P.O. Box 7037
Atlanta, GA 30357-0037

Patents

IN THE UNITED STATES PATENT AND TRADEMARK OFFICE

In re Application of:)
WEBER ET AL.)
Patent Number: **6,688,280**)
Issue Date: **February 10, 2004**)
For: **AIR AND FUEL SUPPLY SYSTEM FOR COMBUSTION ENGINE**

OIPE SEP 17 2004 PATENT & TRADEMARK OFFICE

CERTIFICATE OF EXPRESS MAIL

Mail Stop *Inter Partes* Reexam
Commissioner for Patents
P.O. Box 1450
Alexandria, VA 22313-1450

Sir:
Enclosed for filing in the above case are the following documents:

Form PTO/SB/58 (04-04)
Duplicate copy of for fee processing
Attachment to Request for *Inter Partes* Reexamination Transmittal Form, providing information as to Patent No. 6,688,280 B2
Fee as set for in 37 CFR 1.20(c)(2) - $8800.00 - to be charged to Deposit Account No. 09-0528
Copy of Patent No. 6,688,280 B2
Form PTO-1449
Copy of Patent No. 3,250,068
Copy of Patent No. 5,445,128
Copy of Patent No. 6,301,889
Copy of PCT Publication No. WO 98/02653
Copy of Obert, Internal Combustion Engine and Air Pollution (Intext Educational Publishers, 1973), pp. 612 to 614
Copy of Challen, et al., Diesel Engine Reference Book (Socy. of Automotive Engineers, 1999), pp. 75, 81, 84, 146, 263-305
Return Postcard

Womble Carlyle Sandridge & Rice, PLLC
P.O. Box 7037
Atlanta, GA 30357-0037
(404) 872-7000 (Telephone)
(404) 888-7490 (Facsimile)

Our Reference No: **E025 7002**

I hereby certify that all correspondences listed above are being deposited for delivery to the above addressee, with the United States Postal Service **"EXPRESS MAIL POST OFFICE TO ADDRESSEE"** service under 37 CFR 1.10 on the date indicated below:

The envelope has been given U.S. Postal Service "Express Mail Post Office To Addressee" Package #EV 377646394 US.

9-17-04
Date

Suzanne Skinner
(Printed Name of Person Mailing Correspondence)

Suzanne Skinner
(Signature of Person Mailing Correspondence)

ATLANTA 416404v1

[redacted]

E-FILED
Thursday, 09 February, 2006 05:24:18 PM
Clerk, U.S. District Court, ILCD

66548 U.S. PTO
95000049
08/27/04

PTO/SB/[illegible]
Approved for use through 04/30/2007. OMB 0651-0031
U.S. Patent and Trademark Office; U.S. DEPARTMENT OF COMMERCE
Under the Paperwork Reduction Act of 1995, no persons are required to respond to a collection of information unless it displays a valid OMB control number.

(Also referred to as FORM PTO-1465)

REQUEST FOR *INTER PARTES* REEXAMINATION TRANSMITTAL FORM

Address to:
Mail Stop *Inter Partes* Reexam
Commissioner for Patents
P. O. Box 1450
Alexandria, VA 22313-1450

66548 U.S. PTO
08/27/04

Attorney Docket No. E025 7001
Date: 27 August 2004

1. [X] This is a request for *inter partes* reexamination pursuant to 37 CFR 1.913 of patent number 6,651,618 B1 issued Nov. 25, 2003. The request is made by a third party requester, identified herein below.

2. [X] a. The name and address of the person requesting reexamination is:

Entec Engine Corporation
410 Trammell Drive
Atlanta, Georgia 30004

b. The real party in interest (37 CFR 1.915(b)(8)) is: Clyde C. Bryant

3. [ ] a. A check in the amount of $ _____ is enclosed to cover the reexamination fee, 37 CFR 1.20(c)(2);

[X] b. The Director is hereby authorized to charge the fee as set forth in 37 CFR 1.20(c)(2) to Deposit Account No. 09-0528 (submit duplicate of this form for fee processing); or

[ ] c. Payment by credit card. Form PTO-2038 is attached.

4. [X] Any refund should be made by [ ] check or [X] credit to Deposit Account No. 09-0528. 37 CFR 1.26(c). If payment is made by credit card, refund must be made to credit card account.

5. [X] A copy of the patent to be reexamined having a double column format on one side of a separate paper is enclosed. 37 CFR 1.915(b)(5)

6. [ ] CD-ROM or CD-R in duplicate, Computer Program (Appendix) or large table

7. [ ] Nucleotide and/or Amino Acid Sequence Submission
If applicable, all of the following are necessary

a. [ ] Computer Readable Form (CRF)
b. Specification Sequence Listing on:
i [ ] CD-ROM (2 copies) or CD-R (2 copies); **or**
ii [ ] paper
c. [ ] Statements verifying identity of above copies

8. [ ] A copy of any disclaimer, certificate of correction or reexamination certificate issued in the patent is included.

9. [X] Reexamination of claim(s) 1 through 17 is requested.

10. [X] A copy of every patent or printed publication relied upon is submitted herewith including a listing thereof on Form PTO-1449 or equivalent.

11. [ ] An English language translation of all necessary and pertinent non-English language patents and/or printed publications is included.

This collection of information is required by 37 CFR 1.915. The information is required to obtain or retain a benefit by the public which is to file (and by the USPTO to process) an application. Confidentiality is governed by 35 U.S.C. 122 and 37 CFR 1.14. This collection is estimated to take 2 hours to complete, including gathering, preparing, and submitting the completed application form to the USPTO. Time will vary depending upon the individual case. Any comments on the amount of time you require to complete this form and/or suggestions for reducing this burden, should be sent to the Chief Information Officer, U.S. Patent and Trademark Office, U.S. Department of Commerce, P.O. Box 1450, Alexandria, VA 22313-1450. DO NOT SEND FEES OR COMPLETED FORMS TO THIS ADDRESS. **SEND TO: Mail Stop *Inter Partes* Reexam, Commissioner for Patents, P.O. Box 1450, Alexandria, VA 22313-1450.**

If you need assistance in completing the form, call 1-800-PTO-9199 and select option 2.

08/27/2004 AWDNGUY1 00000006 090528 95000049
01 FC:1813 8800.00 DA

PTO/SB/58 (04-04)
Approved for use through 4/30/2007. OMB 0651-0033
U.S. Patent and Trademark Office; U.S. DEPARTMENT OF COMMERCE
Under the Paperwork Reduction Act of 1995, no persons are required to respond to a collection of information unless it displays a valid OMB control number.

12. [X] The attached detailed request includes at least the following items:

a. A statement identifying each substantial new question of patentability based on prior patents and printed publications. 37 CFR 1.915(b)(3)
b. An identification of every claim for which reexamination is requested, and a detailed explanation of the pertinency and manner of applying the cited art to every claim for which reexamination is requested. 37 CFR 1.915(b)(1) and (3)

13. [X] It is certified that the estoppel provisions of 37 CFR 1.907 do not prohibit this reexamination. 37 CFR 1.915(b)(7)

14. [X] a. It is certified that a copy of this request has been served in its entirety on the patent owner as provided in 37 CFR 1.33(c).
The name and address of the party served and the date of service are:
Steve D. Lundquist, Caterpillar Inc.
Intellectual Property Department, AB6490,
100 N.E. Adams Street, Peoria, Illinois 61629-6490
Date of Service: 27 August 2004; or

[ ] b. A duplicate copy is enclosed since service on patent owner was not possible.

15. Correspondence Address: Direct all communications about the application to:

[X] Customer Number: 26158

OR

[ ] Firm or Individual Name					
Address (line 1)					
Address (line 2)					
City		State		Zip	
Country					
Telephone		Fax			

16. [ ] The patent is currently the subject of the following concurrent proceeding(s):
[ ] a. Copending reissue Application No. _____.
[ ] b. Copending reexamination Control No. _____.
[ ] c. Copending Interference No. _____.
[ ] d. Copending litigation styled:

_____

_____

WARNING: Information on this form may become public. Credit card information should not be included on this form. Provide credit card information and authorization on PTO-2038.

_____ 27 August 2004
Authorized Signature For Third Party Requester *Date*

Louis T. Isaf 29,078
Typed/Printed Name *Registration Number, if applicable*

Attachment to Request for
Inter Partes Reexamination Transmittal Form,
providing information as to
Patent No. 6,651,618 B1

Sir:

Inter Partes reexamination under 35 U.S.C. §§311 to 318 and 37 CFR 1.913 is requested of United States Patent No. 6,651,618 B1, titled AIR AND FUEL SUPPLY SYSTEM FOR COMBUSTION ENGINE, which issued on November 25, 2003, to Gerald N. Coleman, *et al.*, from an application filed on February 20, 2003.

A. Claims for Which Reexamination Is Requested

Reexamination is requested of:

(1) Claims 1 – 8, 10, and 12 – 17 of the Coleman patent in view of the earlier Bryant published PCT application, WO 98/02653.

(2) Claims 6, 7, 14 and 15 of the Coleman patent in view of the earlier Bryant published PCT application WO 98/02653 in view of the earlier Obert publication.

(3) Claims 8 – 11 of the Coleman patent in view of the earlier Bryant published PCT application WO 98/02653 in view of earlier U.S. Patent 5,927,075 to Khair.

The above-noted references are listed on the attached Information Disclosure form, and a copy of each is enclosed.

B. Explanation of Pertinency and Manner of Applying Cited Prior Art to Every Claim for Which Reexamination Is Requested

(1) Claims 1 - 8, 10 and 12 – 17 of the Coleman patent are considered to be anticipated by the Bryant published PCT application, under 35 USC 102(b). The following sets forth these claims and explains how the Bryant PCT application discloses all the recited features.

Coleman Claims	Bryant Disclosure
1. A method of operating an internal combustion engine including at least one cylinder and a piston slidable in the cylinder, the method comprising:	Engine 100 has cylinders 7a-7f with pistons 22a-22f slidable therein.
supplying a mixture of pressurized air and recirculated exhaust gas from an intake manifold to an air intake port of a combustion chamber in the cylinder;	Exhaust gas through conduit 202 is mixed with air entering conduit 8 (Fig. 2; p. 110, l. 25-p.111, l. 12). The mixture is compressed and supplied from intake manifolds 13, 14 to intake ports of the combustion chamber (p. 17, l. 11-15; Figs. 1 & 2).
selectively operating an air intake valve to open the air intake port to allow the pressurized air and exhaust gas mixture to flow between the combustion chamber and the intake manifold substantially during a majority portion of a compression stroke of the piston; and	Intake valves 16, 16' control the intake port. During "perhaps 50% or more of the compression stroke," intake valve 16 is held open so that compressed air flows back from the combustion chamber into intake manifold 13 or 14 (p. 21, l. 18-24). Since the intake valve may be held open for more than 50% of the compression stroke (p. 21, l. 21-22) there will be flow during a majority portion of the compression stroke.
operably controlling a fuel supply system to inject fuel into the combustion chamber after the intake valve is closed.	Fuel can be injected after the intake valve is closed (p. 23, l. 26-30).
2. The method of claim 1, wherein said selectively operating includes operating a variable intake valve closing mechanism to keep the intake valve open.	A variable valve timing system can control the times of opening and closing intake valves 16, 16' (p. 18, l. 26 – p. 19, l.1).
3. The method of claim 1, wherein the selective operation of the air intake valve is based on at least one engine condition.	Intake valves 16, 16' are operated by camshafts 21, which are driven at one-half the engine speed (an engine condition) (p. 17, l. 21-24).
4. The method of claim 1, wherein said selectively operating includes operating the intake valve to remain open for a portion of a second half of the compression stroke of the piston.	The intake valve is held open for perhaps 50% or more of the compression stroke (p. 21, l. 18-22), and therefore would be open during a portion of the second half of the compression stroke.

Coleman Claims	Bryant Disclosure
5. The method of claim 1, further including injecting at least a portion of the fuel during a portion of the compression stroke.	Fuel should be injected "at or after the piston 22 has reached point x and the intake valve is closed" (p. 23, l. 29-30). This is during the compression stroke (p. 23, l. 19-22).
6. The method of claim 5, wherein injecting at least a portion of the fuel includes supplying a pilot injection at a predetermined crank angle before a main injection.	Fuel is injected after the intake valve closes, and can also be injected later (p. 23, l. 29 - p. 24, l. 3), so that the initial injection of fuel would be a pilot injection, as recited in the claim.
7. The method of claim 6, wherein said main injection begins during the compression stroke.	See claims 5 and 6.
8. The method of claim 1, wherein supplying a mixture of pressurized air and recirculated exhaust gas includes controllably providing a quantity of exhaust gas from an exhaust gas recirculation (EGR) system.	A portion of the exhaust gas is circulated through conduit 202 into the air intake conduit 8, and is controlled by valve 201. (p. 110, l. 25 - p. 111, l. 12). This constitutes an exhaust gas recirculation (EGR) system, as broadly recited in the claim.
10. A variable compression ratio internal combustion engine, comprising:	
an engine block defining at least one cylinder;	Engine 100 has a cylinder block (p. 7, l. 7) with cylinders 7a-7f (Fig. 1).
a head connected with said engine block, including an air intake port, and an exhaust port;	Head (p. 7, l. 7) has air intake ports and exhaust ports (p. 16, l. 29 - p. 17, l. 2).
a piston slidable in each cylinder;	Pistons 22a-22f slide in cylinders 7a-7f (p. 16, l. 29).
a combustion chamber being defined by said head, said piston, and said cylinder;	The space 38 above the piston 22 is the combustion chamber (Fig. 11; p. 90, l. 3).
an air intake valve controllably movable to open and close the air intake port;	Air intake valves 16, 16' open and close the air intake ports (p. 16, l. 30).
an air supply system including at least one turbocharger fluidly connected to the air intake port;	Compressor 1 of Fig. 7 is a rotary compressor of the turbo type (p. 47, l. 2-5), which is shown as being driven by the exhaust through line 18, i.e., it is a turbocharger, and is fluidly connected to the air intake ports through conduits 104, 110, 111, and 121/122 (p. 22, l. 10-14).

Coleman Claims	Bryant Disclosure
an exhaust gas recirculation (EGR) system operable to controllably provide a portion of exhaust gas from the exhaust port to the air supply system;	Exhaust gas from the engine exhaust ports passes through conduits 18 and 202 into air intake conduit 8 and is controlled by valve 201 (p. 110, l. 25 - p. 111, l. 4). This constitutes an exhaust gas recirculation (EGR) system, as broadly claimed.
a fuel supply system operable to controllably inject fuel into the combustion chamber at a selected timing;	Fuel is injected into the combustion chamber at particular points in the piston travel (p. 23, l. 26-p. 24, l. 5).
a variable intake valve closing mechanism configured to keep the intake valve open by selective operation of the variable intake valve closing mechanism; and	A variable valve timing system, including a control system such as an ECM, can control the times of opening and closing intake valves 16, 16' (p. 18, l. 26 - p. 19, l. 1).
a controller configured to operate the intake valve to remain open for a portion of a second half of a compression stroke.	The intake valve is held open for perhaps 50% or more of the compression stroke (p. 21, l. 18-22); this would be done by the controller (ECM) of the variable valve timing system (see above), and the valve would be open for a portion of the second half of the compression stroke.
12. A method of controlling an internal combustion engine having a variable compression ratio, said engine having a block defining a cylinder, a piston slidable in said cylinder, a head connected with said block, said piston, said cylinder, and said head defining a combustion chamber, the method comprising:	Engine 100 has a block with cylinders 22a-22f, pistons 7a-7f sliding in the cylinders, and a head, defining a combustion chamber (p. 7, l. 6-8; p. 16, l. 29). A variable valve timing system can control the times of opening and closing the intake valves 16, 16' (p. 18, l. 26 - p. 19, l. 1), and this will vary the compression ratio (p. 20, l. 7-9; p. 23, l. 19-22).
pressurizing a mixture of air and recirculated exhaust gas; supplying said air and exhaust gas mixture to an intake manifold of the engine;	Exhaust gas through conduit 202 is mixed with air entering conduit 8 (Fig. 2; p. 110, l. 25 - p. 111, l. 12). The mixture is compressed and supplied from intake manifolds 13, 14 to the intake ports (Figs. 1 & 2; p. 17, l. 11-15).
maintaining fluid communication between said combustion chamber and the intake manifold during a portion of an intake stroke and through a predetermined portion of a compression stroke; and	The intake valve 16 is open during a portion of the intake stroke and a portion of the compression stroke (p. 19, l. 23-29), allowing fluid communication between the combustion chamber and the intake manifold.

Coleman Claims	Bryant Disclosure
supplying a pressurized fuel directly to the combustion chamber during a portion of a combustion stroke.	Fuel may be injected directly into the combustion chamber during the first part of the combustion (expansion) stroke (p. 23, l. 28-29; p. 24, l. 3-5).
13. The method of claim 12, further including supplying the pressurized fuel during a portion of the compression stroke.	See claim 5.
14. The method of claim 13, wherein supplying the pressurized fuel includes supplying a pilot injection at a predetermined crank angle before a main injection.	See claim 6.
15. The method of claim 14, wherein said main injection begins during the compression stroke.	See claims 5 and 6.
16. The method of claim 12, wherein said predetermined portion of the compression stroke is at least a majority of the compression stroke.	The inlet valve 16 may be held open to perhaps 50% or more of the compression stroke (p. 21, l. 18-22), which would be at least a majority of the compression stroke.
17. The method of claim 12, further including cooling the pressurized air and exhaust gas mixture.	Intake air (and exhaust gas from conduit 202) is cooled by air coolers 10, 11, 12 (p. 19, l. 9-11; Fig. 2).

(2) Claims 6, 7, 14 and 15 of the Coleman patent are considered to be unpatentable over the Bryant published PCT application in view of the Obert publication, under 35 USC 103(a).

It is considered that Bryant discloses all the limitations recited in claims 6, 7, 14 and 15 of the Coleman patent, for the reasons given above. However, in the event the examiner disagrees, the claims are considered to be obvious over Bryant in view of the Obert publication, for the following reasons:

6. The method of claim 5, wherein injecting at least a portion of the fuel includes supplying a pilot injection at a predetermined crank angle before a main injection. 7. The method of claim 6, wherein said main injection begins during the compression stroke.	The Obert publication discloses at page 612 that fuel preconditioning, which includes pilot injection, has been advocated and practiced to some extent for many years, in order to obtain smoother combustion or to burn low-cetane fuels. On page 613, second paragraph, Obert states that "With *pilot injection*, a fraction of

14. The method of claim 13, wherein supplying the pressurized fuel includes supplying a pilot injection at a predetermined crank angle before a main injection.

15. The method of claim 14, wherein said main injection begins during the compression stroke.

states that "With *pilot injection*, a fraction of the fuel is injected early on the compressed stroke and followed, some crankshaft degrees later, by the main injection." Obert then shows in Fig. 15-37 pilot injection at 10 degrees before top dead center (bTDC), and the main injection at one degree bTDC, and states that "elimination of knock (noise, shock) is a major accomplishment of fuel preconditioning." In view of this disclosure of Obert, it would have been obvious to one of ordinary skill in the art to utilize a pilot injection of fuel in the engine disclosed by Bryant in order to achieve the desirable results thereof taught by Obert. It is noted that the pilot injection disclosed by Obert in Fig. 15-37 is at a predetermined crank angle before the main injection.

(3) Claims 8 - 10 of the Coleman patent are considered unpatentable over the Bryant PCT application in view of Khair, under 35 USC 103(a).

It is considered that claims 8 and 10 of the Coleman patent, which recite, *inter alia*, an exhaust gas recirculation (EGR) system, are anticipated by Bryant for the reasons stated above, since the exhaust gas system 18, 202 disclosed by Bryant, through which exhaust gas flows to the air intake 8, broadly constitutes an EGR system. However, to the extent that the examiner does not agree, claims 8 and 10, as well as claims 9 and 11, are considered to be unpatentable over Bryant in view of Khair.

The relevant portions of claims 8 and 10, and claims 9 and 11, read as follows:

8. "...wherein supplying a mixture of pressurized air and recirculated exhaust gas includes controllably providing a quantity of exhaust gas from an exhaust gas recirculation (EGR) system."

9. "The method of claim 8, wherein providing a quantity of exhaust gas includes providing exhaust gas from a low pressure loop EGR system."

10. "... an exhaust gas recirculation (EGR) system operable to controllably provide a portion of exhaust gas from the exhaust port to the air supply system; ..."

11. "The engine of claim 10, wherein the EGR system is a low pressure loop EGR system."

Khair shows in Fig. 2 internal combustion engine 20 with a low pressure loop EGR system 140. Exhaust gas from the low pressure loop EGR line 136 mixes with intake air, passes through compressor 26 of turbocharger 24, and then through cooler 32 to intake manifold 34 of the engine (col. 4, line 65, to col. 5, line 30). Khair discloses that EGR is effective in reducing the NO_x emissions of diesel engines (col. 1, lines 55 to 65), and a low pressure loop EGR has advantages over a high pressure loop (col. 5, line 59, to col. 6, line 16). In view of this disclosure of Khair, it would have been obvious to one of ordinary skill in the art to provide the engine disclosed by Bryant with a low pressure loop EGR system in order to obtain the advantages therefrom as taught by Khair, in which case (as in Khair) the exhaust gas provided to Bryant's line 202 for mixing with air entering conduit 8 would be provided from the low pressure loop EGR system.

C. Statement Identifying Substantial New Question of Patentability

None of the prior art documents referred to above was of record in the file of the Coleman patent, but the disclosure of Bryant patent 6,279,550 of record therein is equivalent to that of Bryant published PCT application WO 98/02653. Nevertheless, the Bryant '550 patent was only cited in an Information Disclosure Statement filed on July 15, 2003, with the applicants' response to the first Office action, was never employed by the examiner as a ground of rejection, and was never discussed, or even referred to, by applicants or the examiner. There is therefore no indication that the grounds of unpatentability as set forth above were considered during prosecution of the Coleman patent.

The prior art documents on which this reexamination request is based, and the Bryant published PCT application in particular, are closer to the subject matter claimed in the Coleman patent than any prior art that was applied by the examiner during the prosecution of that patent,

and provide teachings not provided by such applied prior art. Accordingly, a substantial new question of patentability is raised.



Louis T. Isaf
Attorney for Requester
Reg. No. 29,078

Womble Carlyle Sandridge & Rice, PLLC
P.O. Box 7037
Atlanta, GA 30357-0037

Patents

IN THE UNITED STATES PATENT AND TRADEMARK OFFICE

In re Application of:)
COLEMAN ET AL.)
Patent Number: **6,651,618**)
Issue Date: **November 25, 2003**)
For: **AIR AND FUEL SUPPLY SYSTEM FOR COMBUSTION ENGINE**

CERTIFICATE OF EXPRESS MAIL

Mail Stop *Inter Partes* Reexam
Commissioner for Patents
P.O. Box 1450
Alexandria, VA 22313-1450

Sir:
Enclosed for filing in the above case are the following documents:

Form PTO/SB/58 (04-04)
Duplicate copy of for fee processing
Attachment to Request for *Inter Partes* Reexamination Transmittal Form, providing information as to Patent No. 6,651,618 B1
Fee as set for in 37 CFR 1.20(c)(2) - $8800.00 - to be charged to Deposit Account No. 09-0528
Copy of Patent No. 6,651,618 B1
Form PTO-1449
Copy of Patent No. 5,927,075
Copy of PCT Publication No. WO 98/02653
Copy of Obert, Internal Combustion Engine and Air Pollution (Intext Educational Publishers, 1973), pp. 612 to 614
Return Postcard

Womble Carlyle Sandridge & Rice, PLLC
P.O. Box 7037
Atlanta, GA 30357-0037
(404) 872-7000 (Telephone)
(404) 888-7490 (Facsimile)

Our Reference No: **E025 7001**

I hereby certify that all correspondences listed above are being deposited for delivery to the above addressee, with the United States Postal Service **"EXPRESS MAIL POST OFFICE TO ADDRESSEE"** service under 37 CFR 1.10 on the date indicated below:

The envelope has been given U.S. Postal Service "Express Mail Post Office To Addressee" Package #EV 377646363 US.

8-27-04
Date

Suzanne Skinner
(Printed Name of Person Mailing Correspondence)

Suzanne Skinner
(Signature of Person Mailing Correspondence)

ATLANTA 413974v1

[redacted]

E-FILED
Thursday, 09 February, 2006 05:25:43 PM
Clerk, U.S. District Court, ILCD

US006279550B1

(12) **United States Patent**
Bryant

(10) **Patent No.: US 6,279,550 B1**
(45) **Date of Patent: Aug. 28, 2001**

(54) **INTERNAL COMBUSTION ENGINE**

(76) Inventor: **Clyde C. Bryant**, 410 Trammel Dr., Alpharetta, GA (US) 30004

(*) Notice: Subject to any disclaimer, the term of this patent is extended or adjusted under 35 U.S.C. 154(b) by 0 days.

(21) Appl. No.: **08/863,103**

(22) Filed: **May 23, 1997**

Related U.S. Application Data

(63) Continuation-in-part of application No. 08/841,488, filed on Apr. 23, 1997, now abandoned.
(60) Provisional application No. 60/040,630, filed on Mar. 7, 1997, provisional application No. 60/029,260, filed on Oct. 25, 1996, provisional application No. 60/023,460, filed on Aug. 6, 1996, and provisional application No. 60/022,102, filed on Jul. 17, 1996.

(51) **Int. Cl.**[7] **F02B 33/00**

(52) **U.S. Cl.** **123/559.1**; 60/609; 123/562; 123/316; 123/432

(58) **Field of Search** 60/605.1, 609, 60/612; 123/316, 432, 559.1, 562

(56) **References Cited**

U.S. PATENT DOCUMENTS

1,825,817	*	10/1931	Patterson	123/559.1
1,963,780	*	6/1934	Du Bois	60/605.1
2,344,993		3/1944	Lysholm .	
2,594,845		4/1952	Baumann .	
2,670,595		3/1954	Miller .	

(List continued on next page.)

FOREIGN PATENT DOCUMENTS

58-180722	*	10/1983	(JP)	123/316
58-211526	*	12/1983	(JP)	123/432
1247573	*	7/1986	(SU)	123/432

Primary Examiner—Michael Koczo
(74) *Attorney, Agent, or Firm*—Womble Carlyle Sandridge & Rice

(57) **ABSTRACT**

The invention is concerned with a method of deriving mechanical work from a combustion gas in internal combustion engines and reciprocating internal combustion engines for carrying out the method. The invention includes methods and apparatuses for managing combustion charge densities, temperatures, pressures and turbulence in order to produce a true mastery within the power cylinder in order to increase fuel economy, power, and torque while minimizing polluting emissions. In its preferred embodiments, the method includes the steps of (i) producing an air charge, (ii) controlling the temperature, density and pressure of the air charge, (iii) transferring the air charge to a power cylinder of the engine such that an air charge having a weight and density selected from a range of weight and density levels ranging from below atmospheric weight and density to heavier-than-atmospheric weight and density is introduced into the power cylinder, and (iv) then compressing the air charge at a lower-than-normal compression ratio, (v) causing a pre-determined quantity of charge-air and fuel to produce a combustible mixture, (vi) causing the mixture to be ignited within the power cylinder, and (vii) allowing the combustion gas to expand against a piston operable in the power cylinders with the expansion ratio of the power cylinders being substantially greater than the compression ratio of the power cylinders of the engine. In addition to other advantages, the invented method is capable of producing mean effective cylinder pressures ranging from lower-than-normal to higher-than-normal. In the preferred embodiments, the mean effective cylinder pressure is selectively variable (and selectively varied) throughout the mentioned range during the operation of the engine. In an alternate embodiment related to constant speed-constant load operation, the mean effective cylinder pressure is selected from the range and the engine is configured, in accordance with the present invention, such that the mean effective cylinder pressure range is limited, being varied only in the amount required for producing the power, torque and speed of the duty cycle for which the engine is designed.

26 Claims, 34 Drawing Sheets

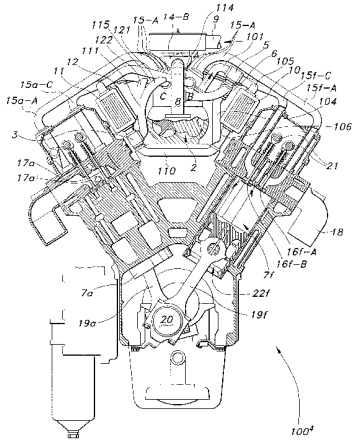

U.S. PATENT DOCUMENTS

2,773,490	*	12/1956	Miller	123/316
3,015,934	*	1/1962	Miller	123/316
3,186,388	*	6/1965	Bricout	60/605.1
3,266,234	*	8/1966	Cook	60/605.1
4,565,167		1/1986	Bryant .	
4,730,457		3/1988	Yamada et al.	60/609
4,903,488		2/1990	Shibata	60/609
4,959,961	*	10/1990	Hiereth	60/612

* cited by examiner

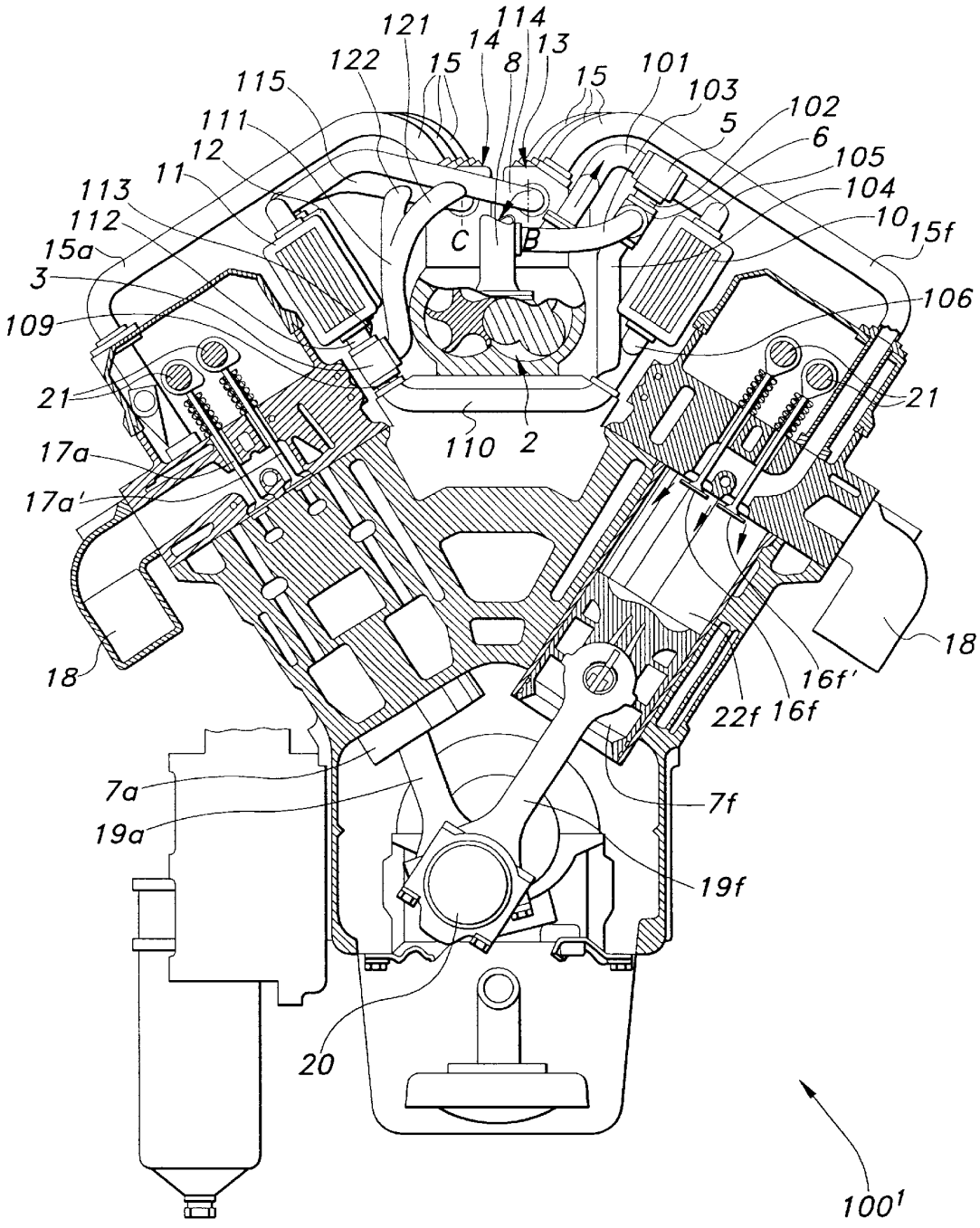
121
114
14
13
122
15
8
15
101
115
103
111
5
102
12
6
11
105
113
104
112
10
15f
15a
C
B
3
106
109
21
21
110
2
17a
17a'
18
18
16f'
22f
16f
7a
7f
19a
19f
20
100'

FIG 1

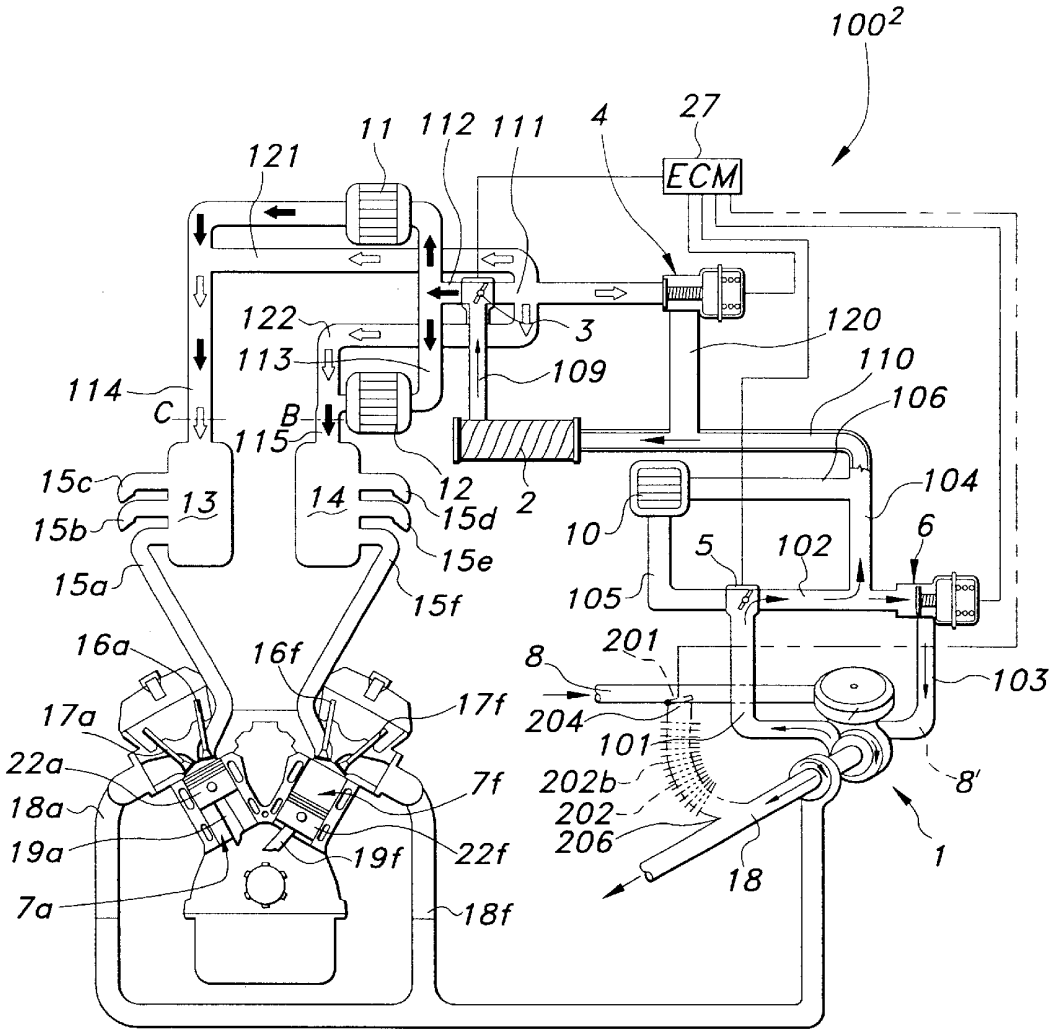
100²
ECM
27
4
11
112
111
121
122
113
3
109
120
110
106
114
C
B
115
12
2
104
15c
13
14
15d
10
6
15b
15e
5
102
15a
15f
105
16a
16f
201
8
103
17a
17f
204
101
22a
7f
202b
8'
18a
202
19a
19f
22f
206
1
18
7a
18f

FIG 2

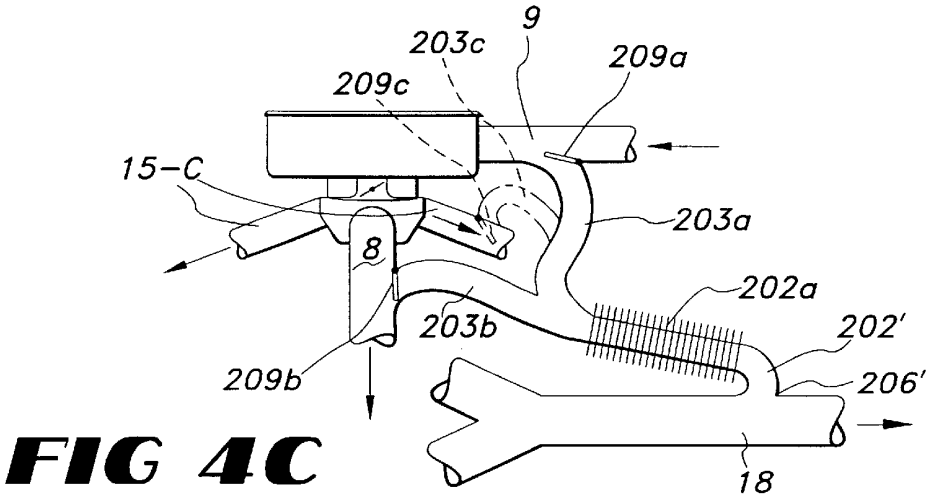
9
203c
209a
209c
15-C
203a
8
202a
203b
202'
209b
206'
18

FIG 4C

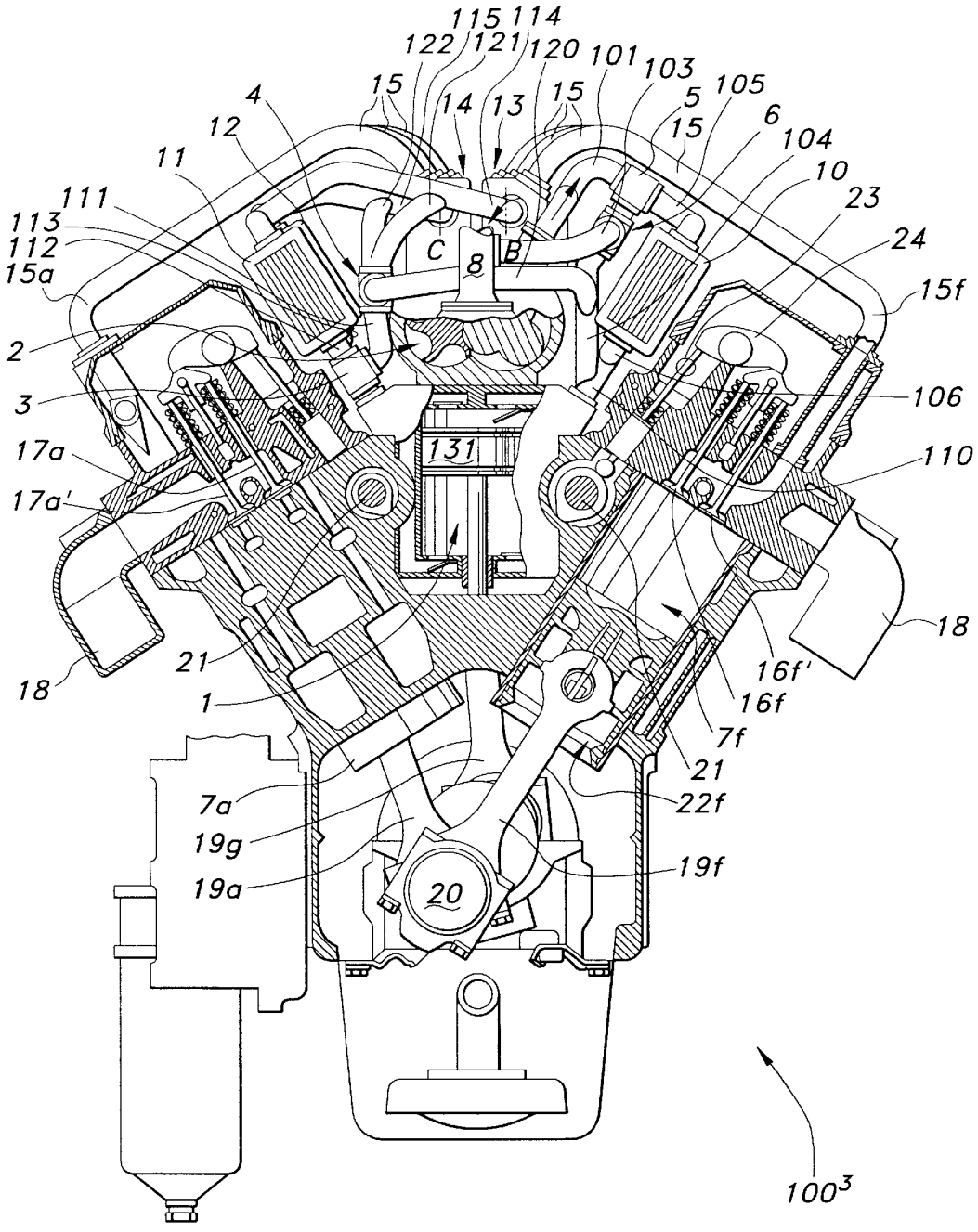
115
114
122
121
120
101
103
105
15
14
13
15
5
15
6
104
4
12
11
10
23
24
111
113
112
15a
C
8
B
15f
2
3
106
131
17a
17a'
110
18
21
1
16f'
16f
7f
21
22f
7a
19g
19a
20
19f
18
100

FIG 3

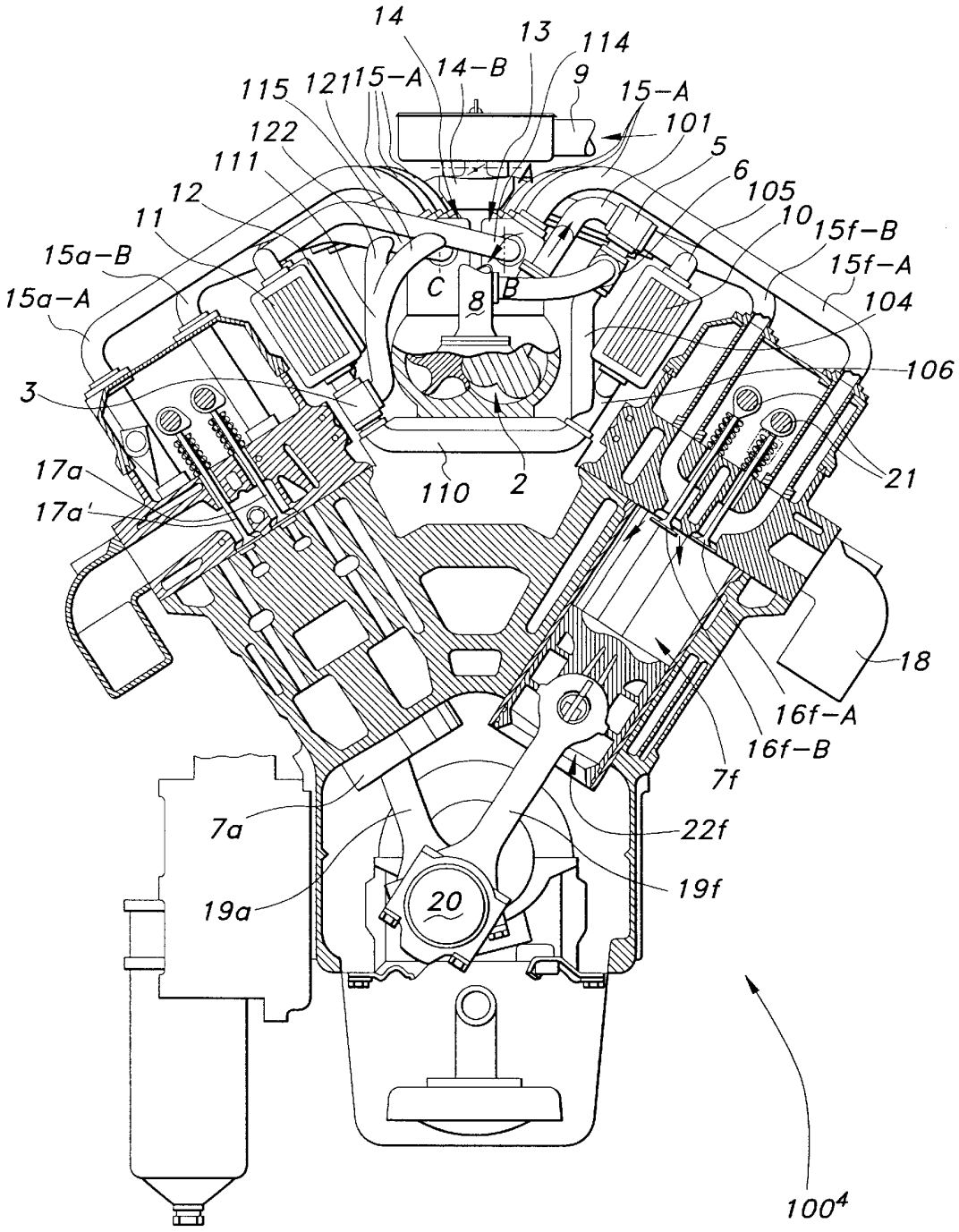
14
13
114
9
14-B
15-A
115
121
15-A
101
122
5
111
6
105
12
10
11
15f-B
15a-B
15f-A
C
8
B
15a-A
104
106
3
17a
110
2
21
17a'
18
16f-A
16f-B
7f
7a
22f
19f
19a
20
100⁴

FIG 4

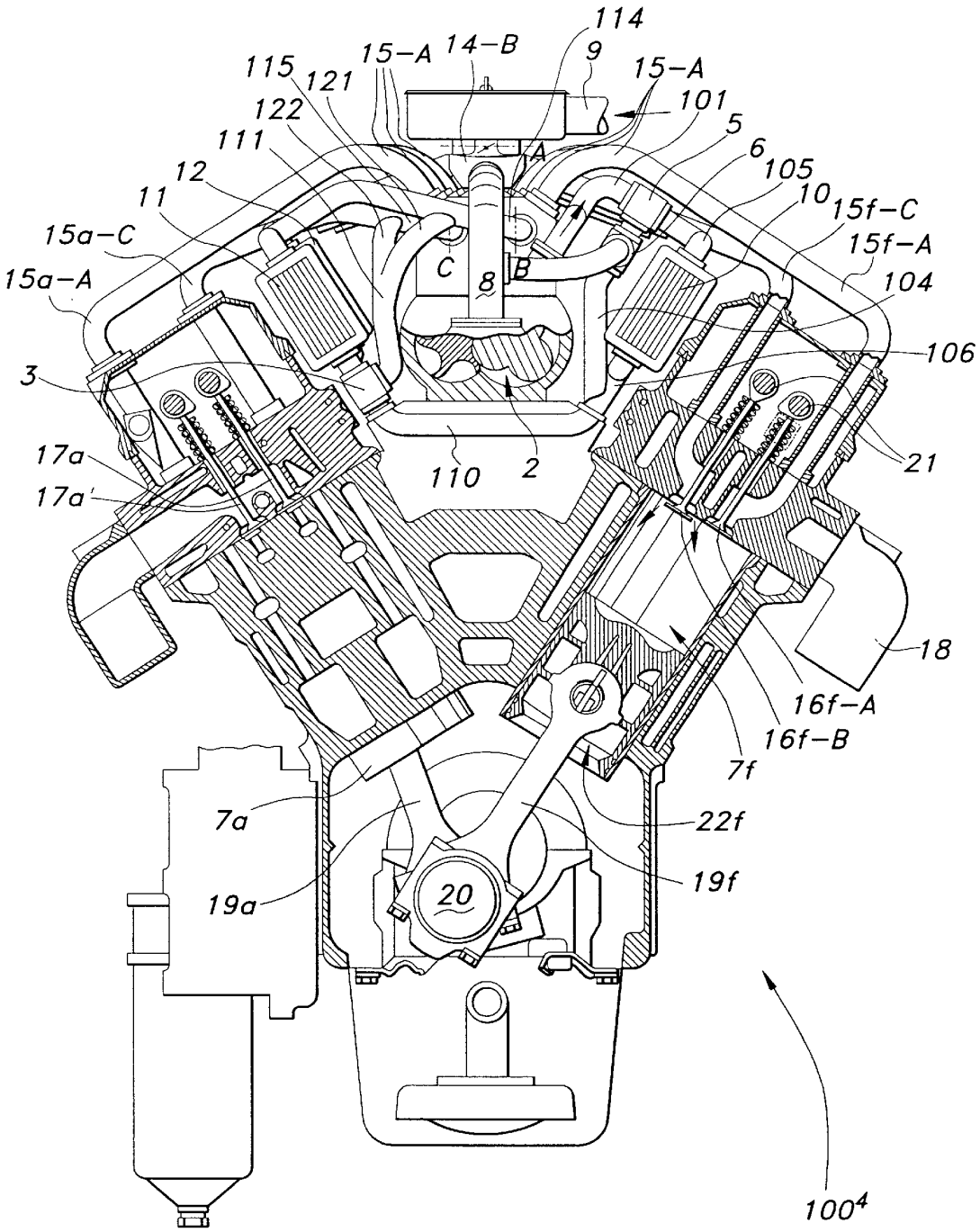
114
9
15-A
14-B
15-A
115
121
122
111
101
5
6
105
10
12
11
15f-C
15a-C
15f-A
15a-A
C
8
B
104
106
3
17a
17a'
110
2
21
18
16f-A
16f-B
7f
7a
22f
19a
20
19f
100⁴

FIG 4B

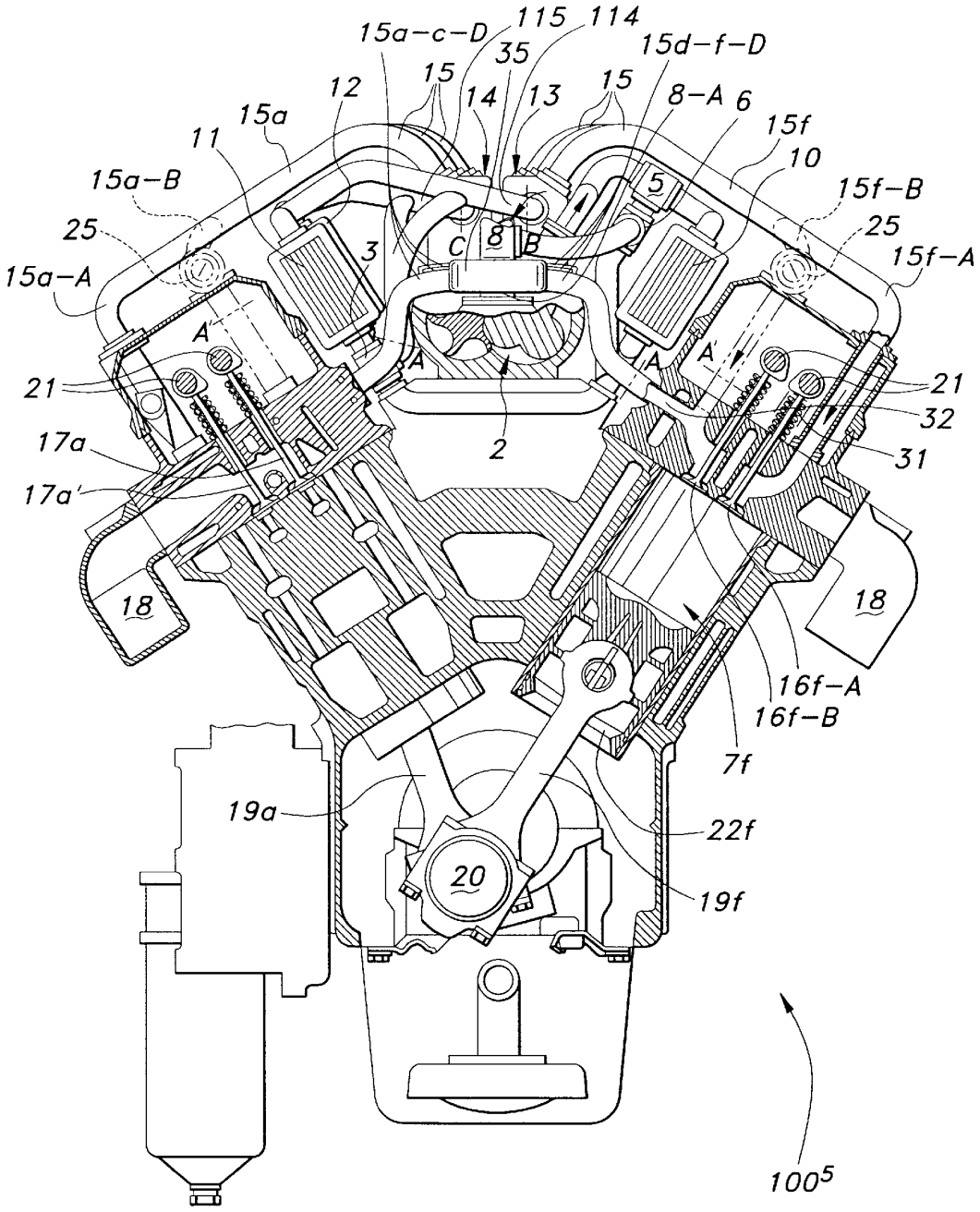
15a-c-D
115
114
15d-f-D
35
12
15
14
13
15
8-A
6
15a
11
15f
10
15a-B
5
15f-B
25
3
C
8
B
25
15f-A
15a-A
A
A
A
A
21
21
32
2
31
17a
17a'
18
18
16f-A
16f-B
7f
19a
22f
20
19f
100

FIG 5

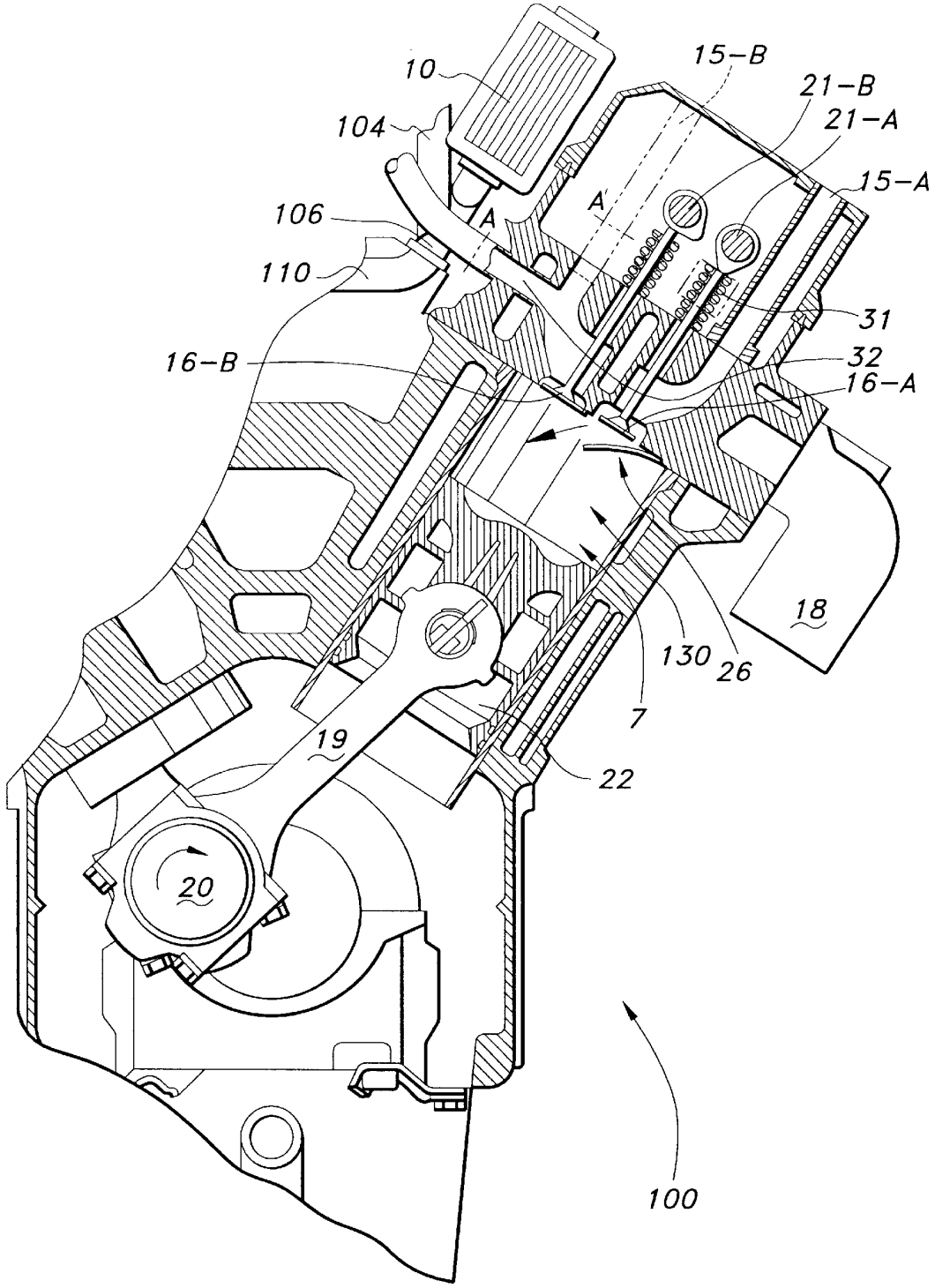
10
15-B
21-B
21-A
104
15-A
A
A'
106
110
31
32
16-B
16-A
18
130
26
7
19
22
20
100

FIG 6

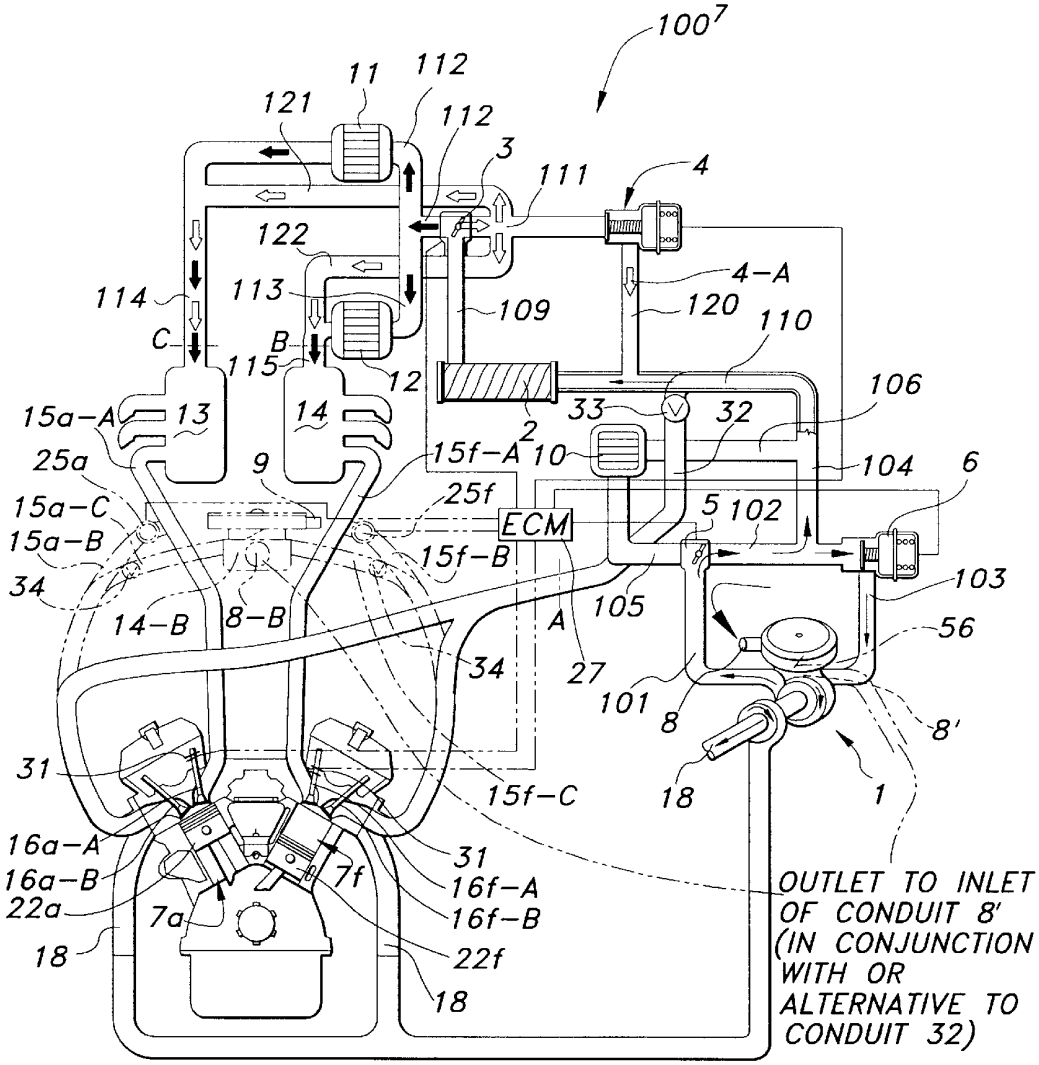
100'
11
112
121
112
3
111
4
122
4-A
114
113
109
120
110
C
B
115
12
106
15a-A
13
14
33
32
2
25a
9
15f-A
10
104
6
15a-C
25f
ECM
5
102
15a-B
15f-B
103
34
14-B
8-B
A
105
56
34
27
101
8
8'
31
15f-C
18
1
16a-A
31
16a-B
7f
16f-A
22a
7a
16f-B
18
22f
18
OUTLET TO INLET OF CONDUIT 8' (IN CONJUNCTION WITH OR ALTERNATIVE TO CONDUIT 32)

FIG 7

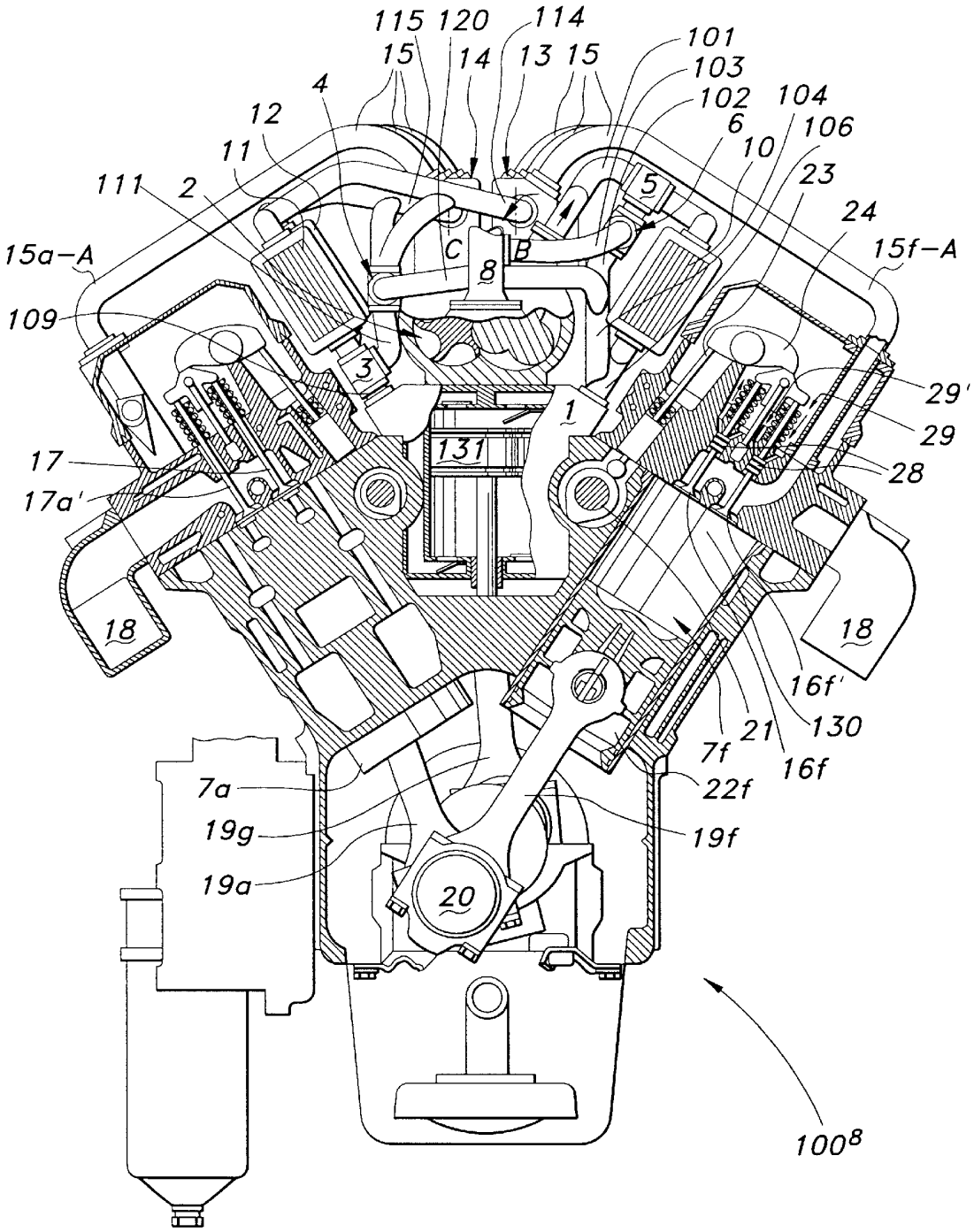
115
120
114
15
14
13
15
101
103
102
104
106
6
10
23
24
15f-A
4
12
11
111
2
15a-A
109
C
B
8
5
3
1
131
29'
29
28
17
17a'
18
18
16f'
130
21
16f
7f
22f
19f
7a
19g
19a
20
100⁸

FIG 8

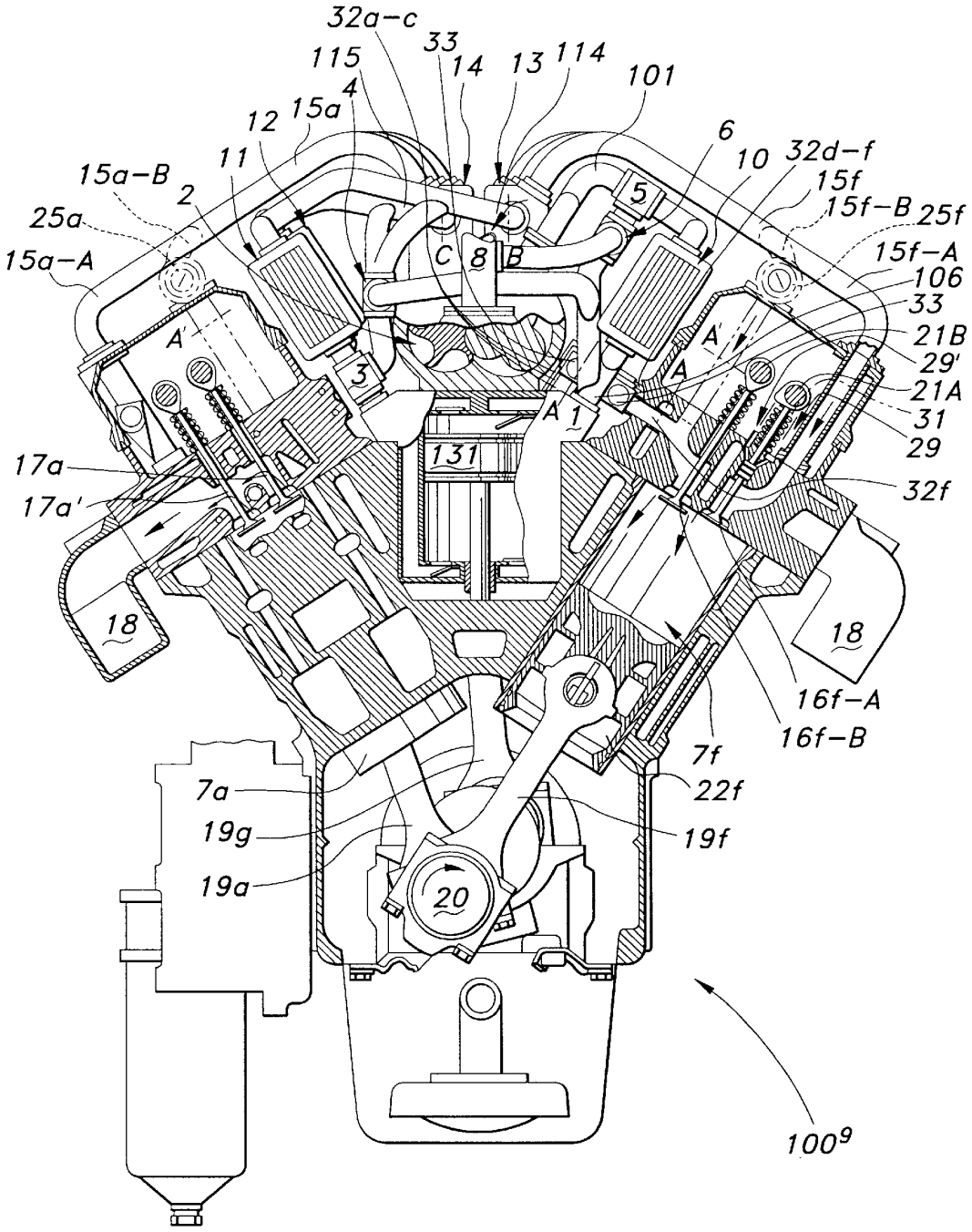
32a–c
33
115
14
13
114
101
4
15a
12
6
10
32d–f
11
15a–B
2
15f
15f–B
25f
25a
15a–A
C
8
B
5
15f–A
106
33
A'
A
21B
29'
3
21A
31
29
A
1
131
17a
32f
17a'
18
18
16f–A
16f–B
7f
22f
7a
19g
19f
19a
20
100

FIG 9

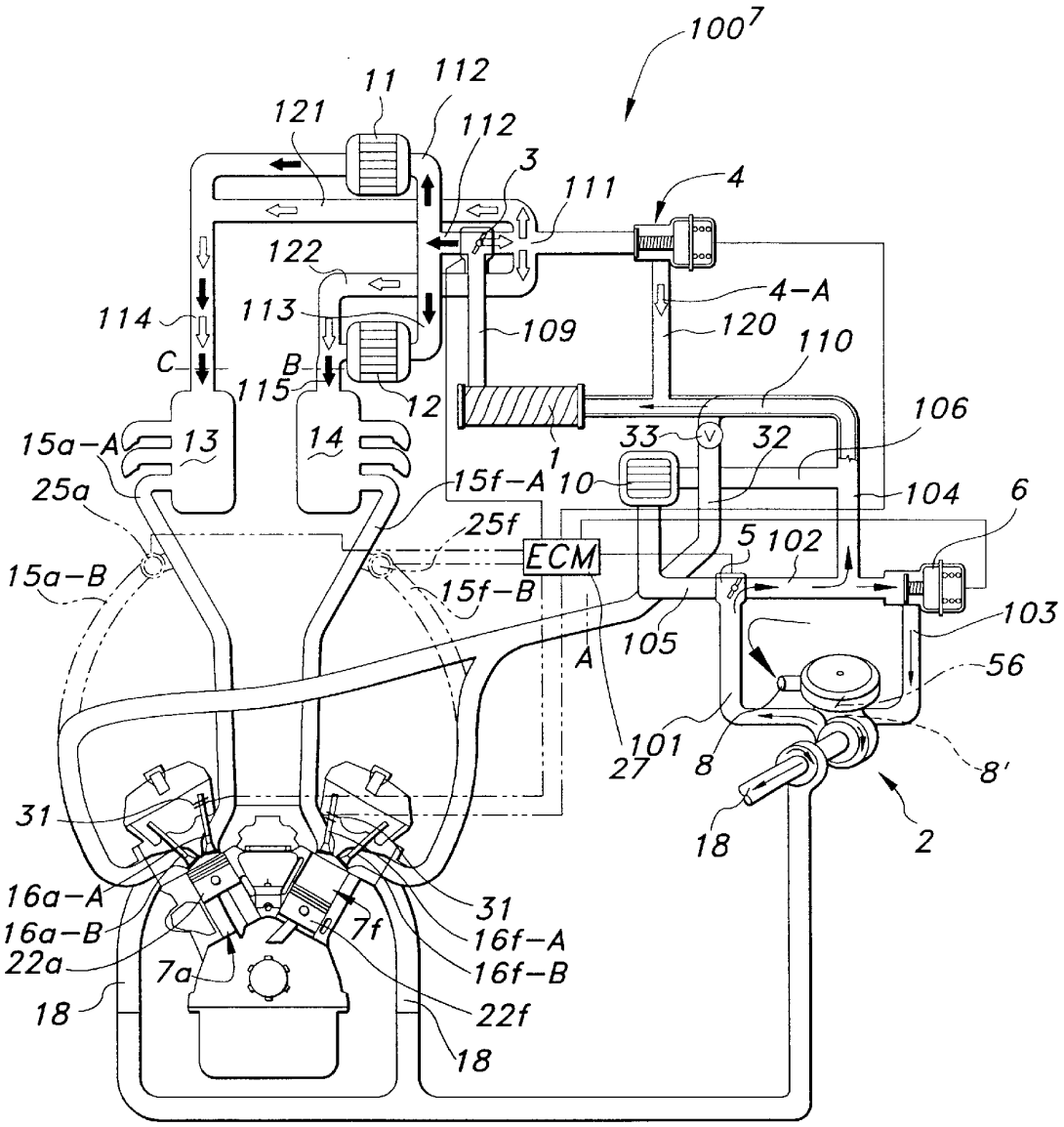
100
11
112
121
112
3
111
4
122
4-A
114
113
109
120
110
C
B
115
12
106
15a-A
13
14
33
32
1
10
104
6
25a
15f-A
25f
ECM
5
102
15a-B
15f-B
103
105
A
56
101
27
8
8'
31
18
2
16a-A
16a-B
22a
18
7a
7f
31
16f-A
16f-B
22f
18

FIG 9B

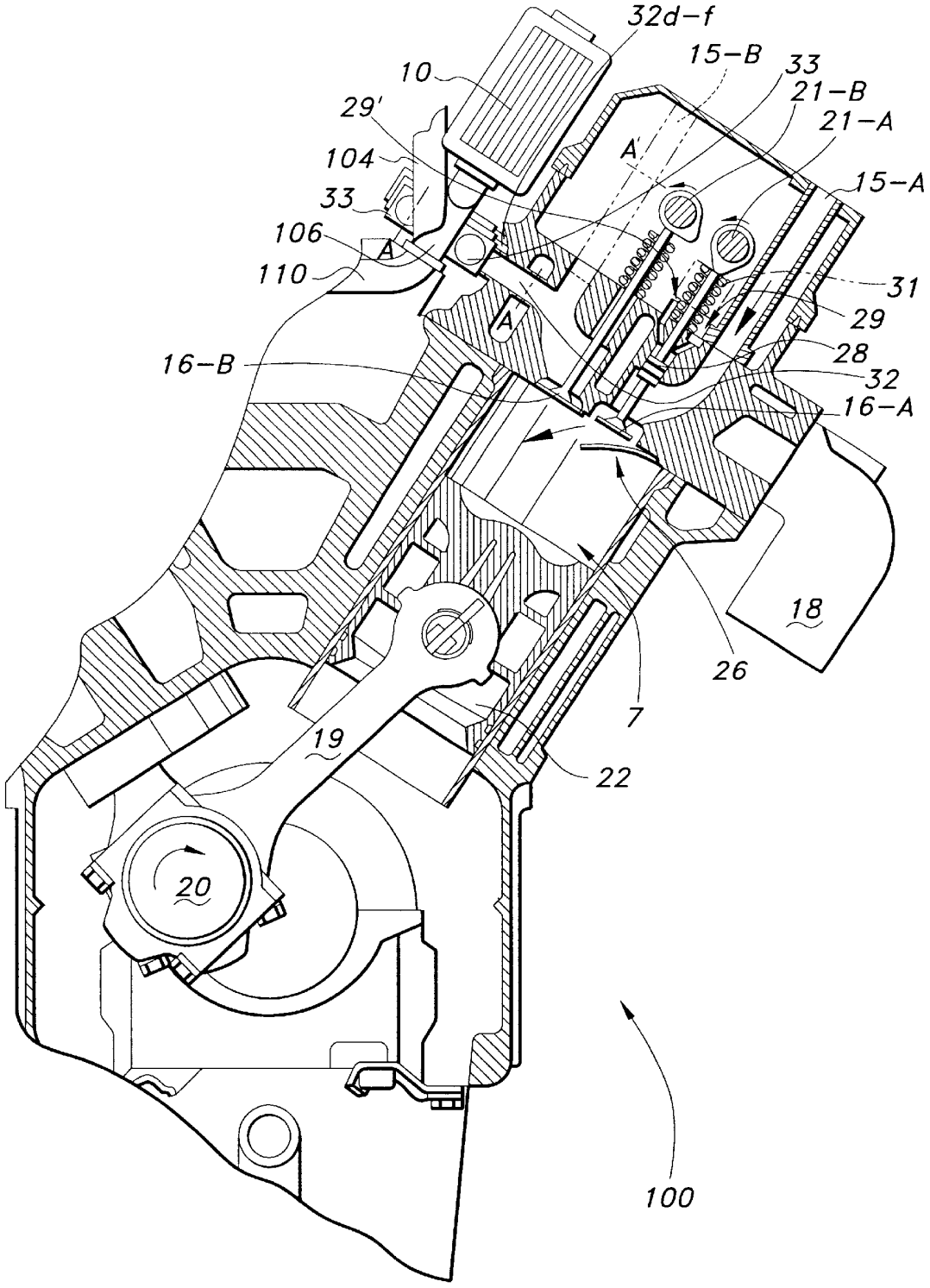
32d–f
15–B
33
21–B
21–A
15–A
10
29'
104
33
106
110
A
A'
31
29
28
32
16–A
16–B
18
26
7
19
22
20
100

FIG 10

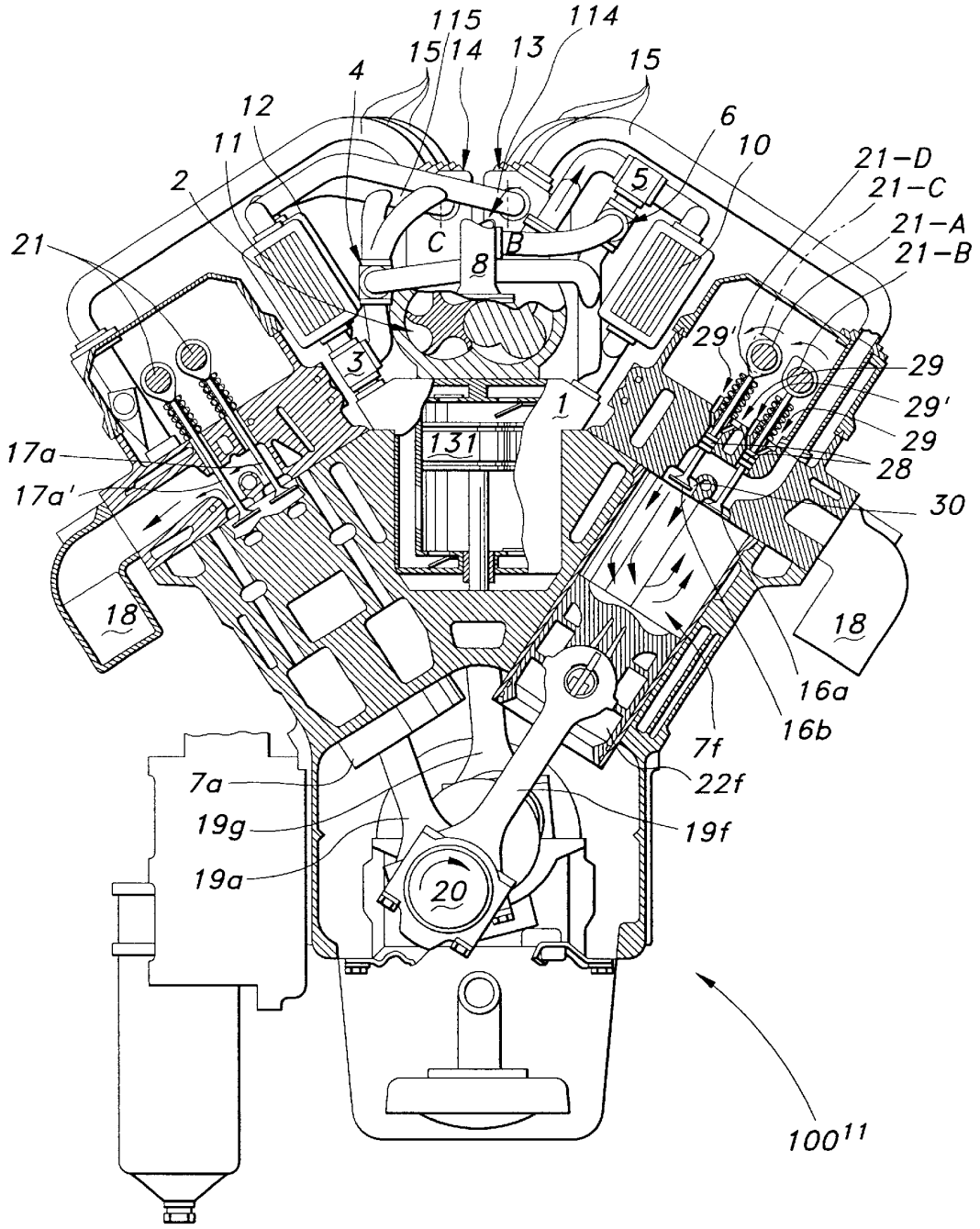
115
15
14
13
114
15
4
12
11
2
6
10
5
21-D
21-C
21-A
21-B
21
C
B
8
3
29'
29
1
131
17a
17a'
28
30
18
18
16a
16b
7f
22f
19f
7a
19g
19a
20
100
11

FIG 11

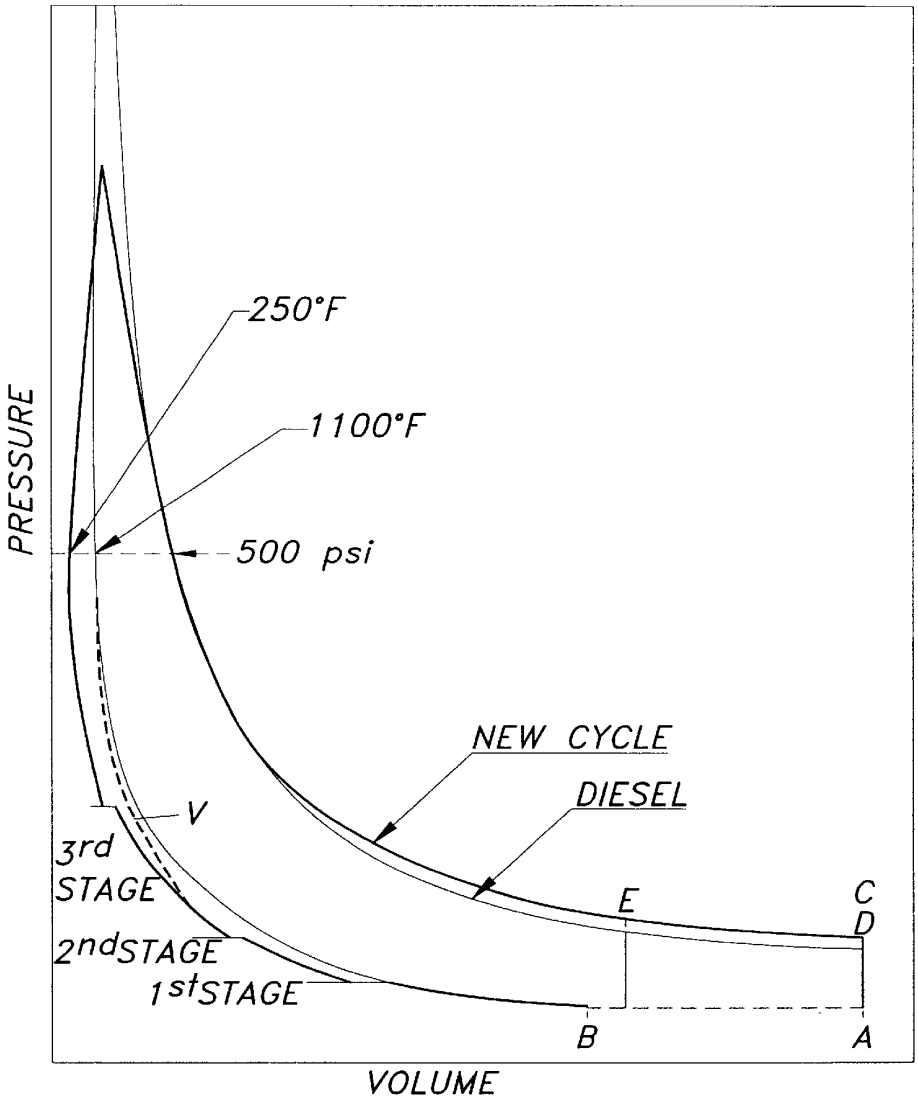

A – COMPRESSION BEGINS IN 2–STROKE AND 4–STROKE DIESEL CYCLE ENGINE
B – COMPRESSION BEGINS IN 2–STROKE AND 4–STROKE NEW CYCLE ENGINE
C – EXPANSION ENDS IN 4–STROKE DIESEL CYCLE ENGINE
D – EXPANSION ENDS IN 2–STROKE AND 4–STROKE NEW CYCLE ENGINE
E – EXPANSION ENDS (AT EXHAUST BLOW–DOWN) IN 2–STROKE DIESEL CYCLE ENGINE
V – SEE NOTE 1 IN DESCRIPTION

FIG 12

1:05-cv-01394-MMM-JAG # 28-14 Page 17 of 23

COMPARISON OF OPERATING PARAMETERS OF A HEAVY DUTY TWO-STROKE DIESEL ENGINE (A) WITH THE ENGINE OF THIS INVENTION (B)

ENGINE	COMPRESSION RATIO OR NOMINAL COMPRESSION RATIO	EFFECTIVE COMP RATIO	COMPRESSION PRESSURE (PSI)	TEMP @ END COMP (DEG F.)	TEMP @ END COMB (DEG F.)	CHARGE DENSITY (LB./CU. FT.)	EXPANSION RATIO	E. R. / C. R.	CHARGE WEIGHT PER REVOLUTION (GRAMS)
A	19:1	19:1	907	1300	3400	1.45	*10:1	0.5	2.06
B(ic)	13:1	2:1	533	250	3000	2.03	**19:1	1.5	2.86
B(bp)	13:1	13:1	533	992	^3100	1.01	**19:1	1.5	1.43
B2(ic)	10:1	2:1	369	250	^2800	1.40	**19:1	1.9	1.98
B2(bp)	10:1	10:1	369	871	^2900	0.75	**19:1	1.9	1.06

* Exhaust valve opens midstroke
** Exhaust valve opens near BDC
(ic) Air charge intercooled except for last stage of compression
(bp) Intercoolers bypassed
^ Estimated

$$\frac{\text{E. R.}}{\text{C. R.}} = \frac{\text{EXPANSION RATIO}}{\text{COMPRESSION RATIO}}$$

FIG 13

1:05-cv-01394-MMM-JAG # 28-14 Page 18 of 23

COMPARISON OF OPERATING PARAMETERS OF A HEAVY DUTY FOUR-STROKE DIESEL ENGINE (A)

WITH THE ENGINE OF THIS INVENTION (B)

ENGINE	COMPRESSION RATIO OR NOMINAL COMPRESSION RATIO	EFFECTIVE COMP RATIO	COMPRESSION PRESSURE (PSI)	TEMP @ END COMP (DEG F.)	TEMP @ END COMB (DEG F.)	CHARGE DENSITY (LB./CU. FT.)	EXPANSION RATIO	E. R. / C. R.	CHARGE WEIGHT PER REVOLUTION (GRAMS)
A	19:1	19:1	907	1300	3400	1.45	19:1	1.0	*1.03
B(ic)	13:1	2:1	533	250	3000	2.03	19:1	1.5	**2.86
B(bp)	13:1	13:1	533	992	^3100	1.01	19:1	1.5	**1.43
B2(ic)	10:1	2:1	369	250	^2800	1.40	19:1	1.9	**1.98
B2(bp)	10:1	10:1	369	871	^2900	0.75	19:1	1.9	**1.06

* Per revolution, not per firing stroke
** Per revolution and per firing stroke
(ic) Air charge intercooled except for last stage of compression
(bp) Intrecoolers bypassed
^ Estimated

$$\frac{\text{E. R.}}{\text{C. R.}} = \frac{\text{EXPANSION RATIO}}{\text{COMPRESSION RATIO}}$$

FIG 14

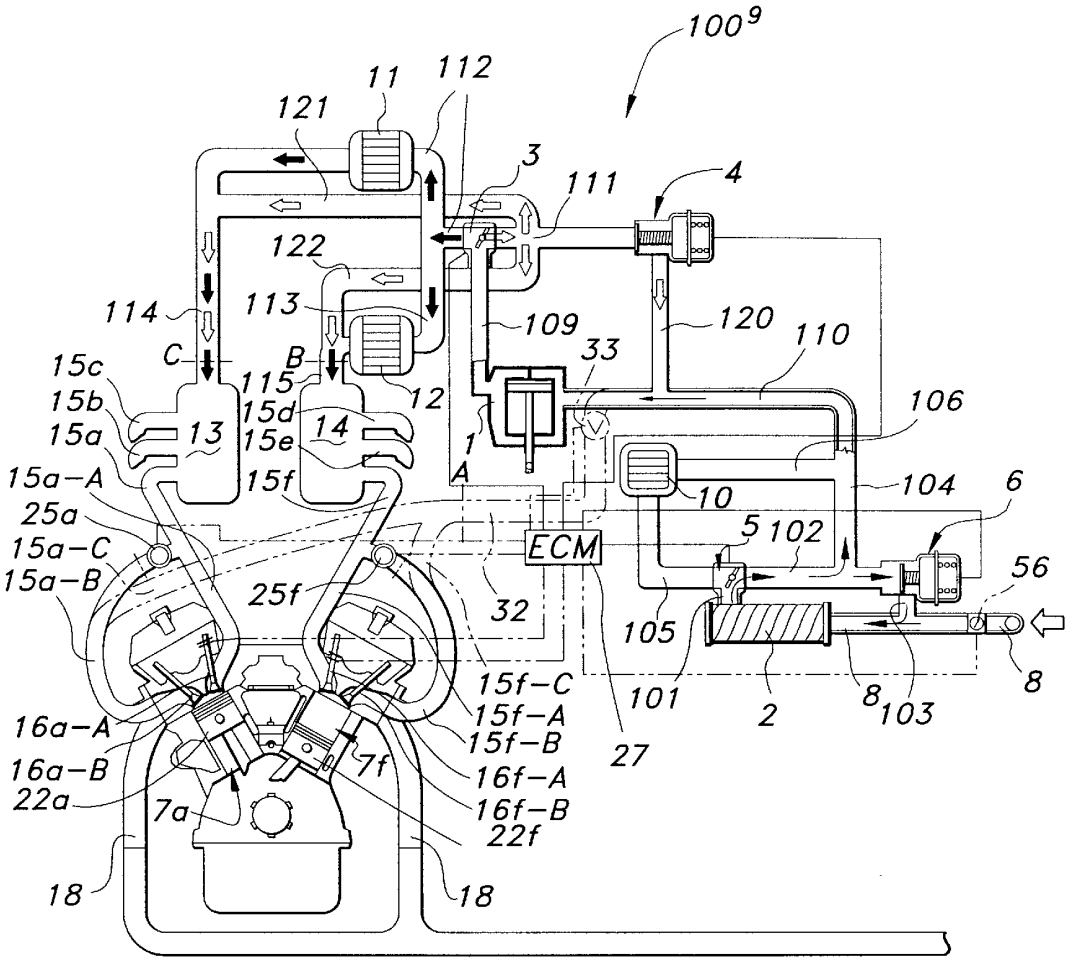
100
9
11
112
121
3
111
4
122
114
113
109
120
110
33
C
B
15c
15b
15a
115
15d
15e
13
14
12
1
A
106
15a-A
15f
10
104
6
25a
15a-C
15a-B
5
102
ECM
56
25f
32
105
15f-C
15f-A
15f-B
101
2
8
103
8
16a-A
16a-B
22a
7a
7f
16f-A
16f-B
22f
27
18
18

FIG 15

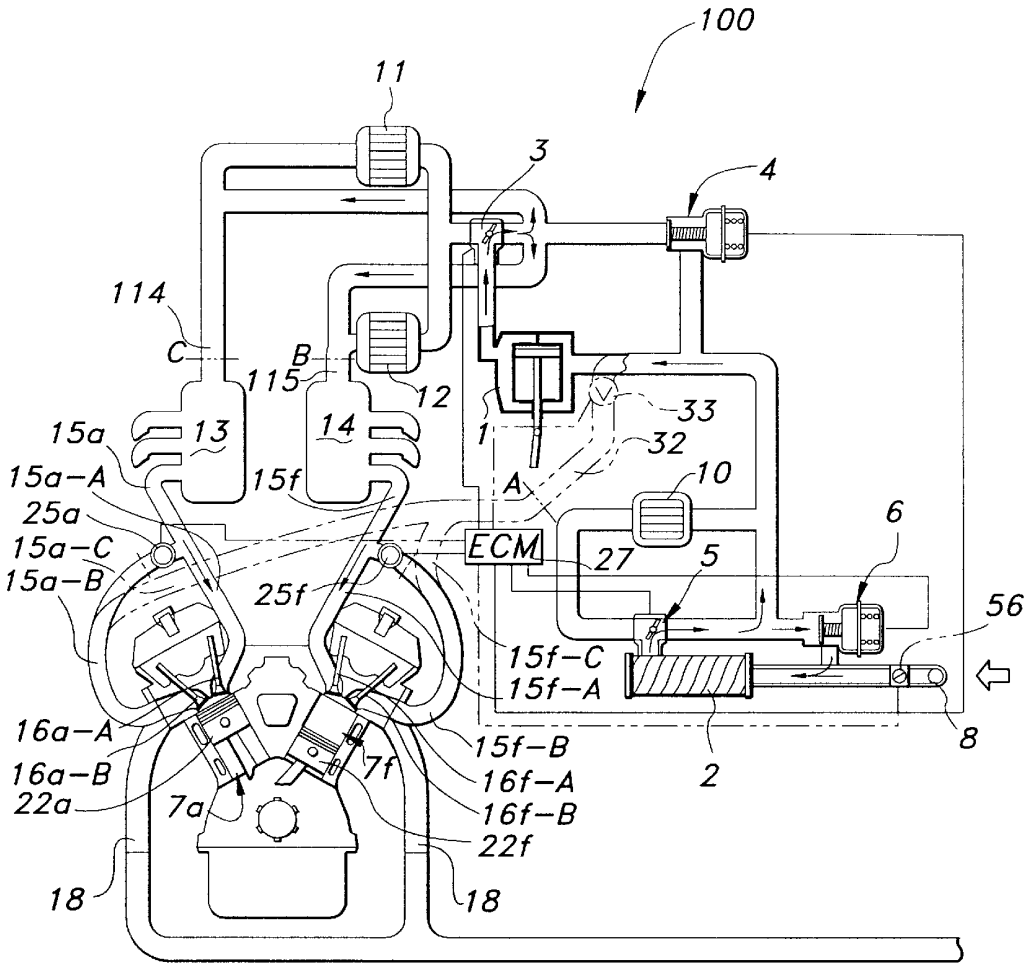
100
11
3
4
114
C
B
115
12
33
32
1
A
10
15a
13
14
15a-A
15f
25a
15a-C
15a-B
ECM
27
5
6
56
25f
15f-C
15f-A
16a-A
16a-B
22a
7a
7f
15f-B
16f-A
16f-B
22f
2
8
18
18

FIG 16

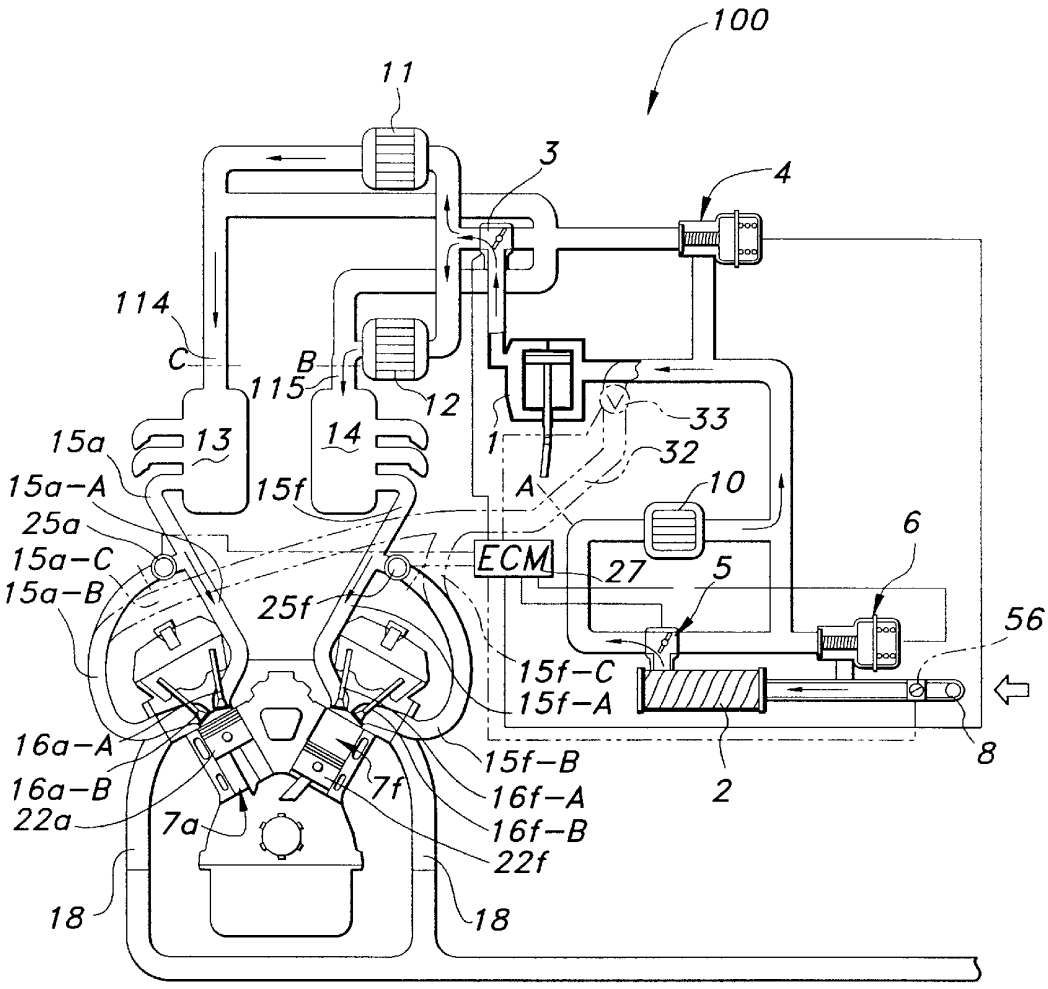
100
11
3
4
114
C
B
115
12
1
33
32
A
10
15a
13
14
15f
15a-A
25a
15a-C
15a-B
ECM
27
5
6
25f
56
15f-C
15f-A
16a-A
16a-B
22a
7a
7f
15f-B
16f-A
16f-B
22f
2
8
18
18

FIG 17

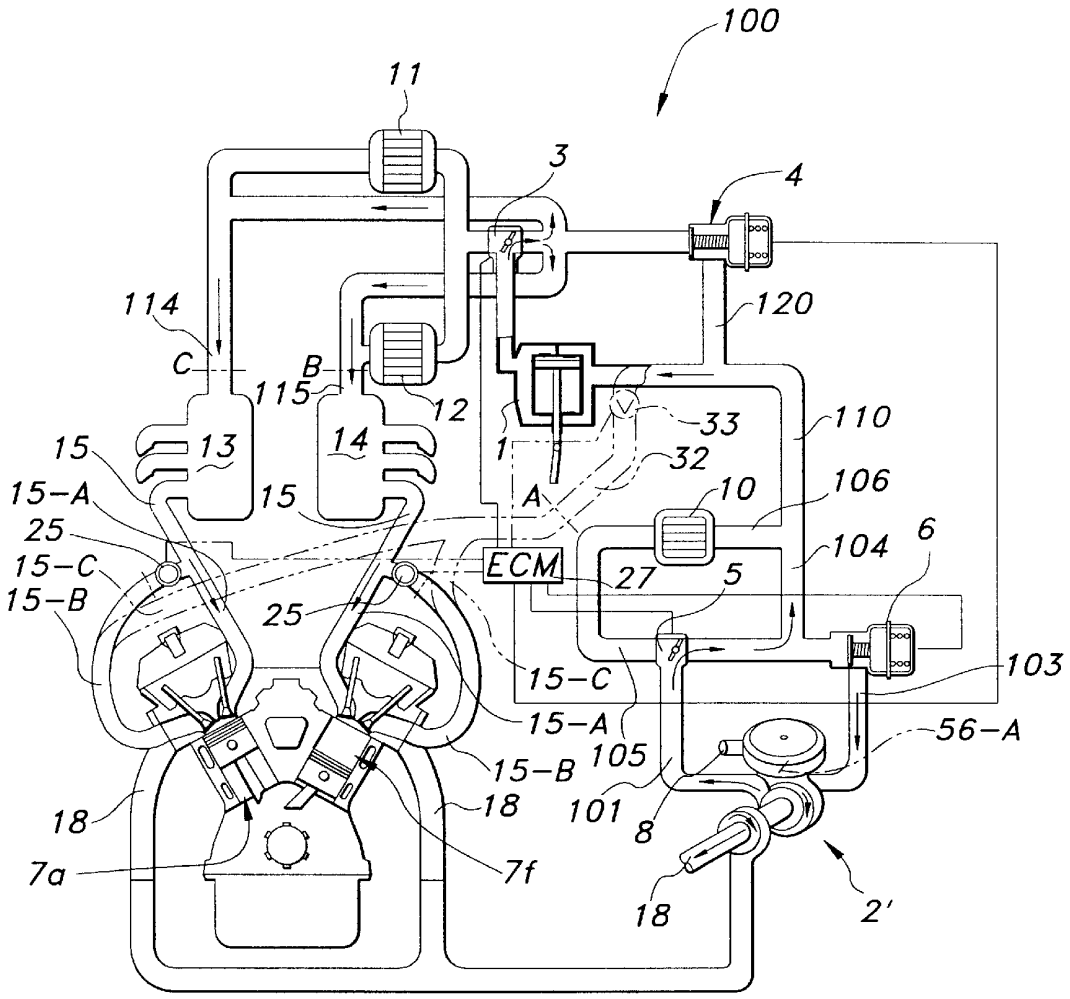
100
11
3
4
114
C
B
115
12
120
33
110
15
13
14
1
32
15-A
15
A
10
106
25
6
15-C
ECM
27
5
104
15-B
25
15-C
103
15-A
56-A
105
15-B
18
18
101
8
18
7a
7f
2'

FIG 18

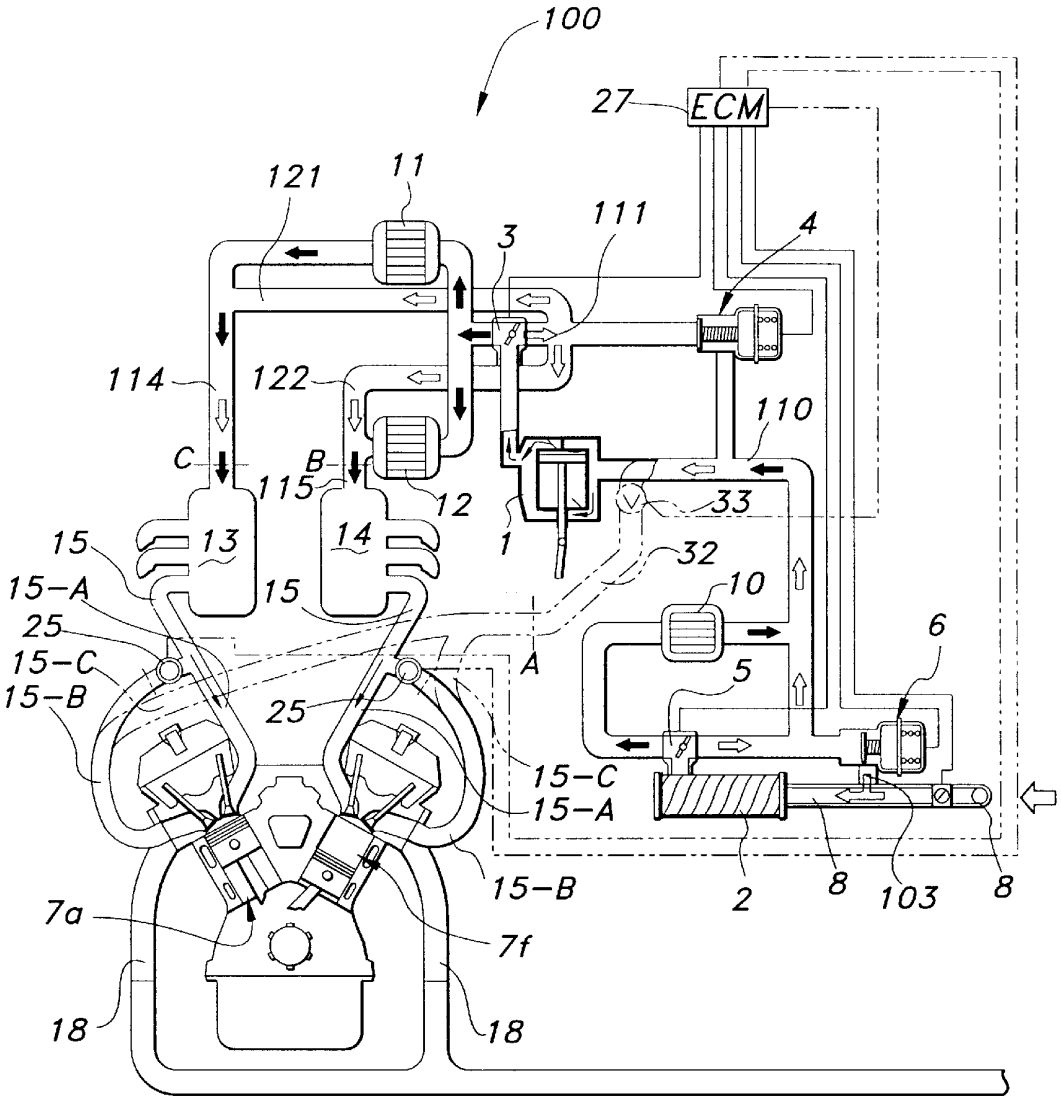
100
27
ECM
121
11
111
3
4
114
122
110
C
B
115
12
33
1
15
13
14
32
15-A
15
10
25
6
15-C
A
5
15-B
25
15-C
15-A
15-B
2
8
103
8
7a
7f
18
18

FIG 19

E-FILED
Thursday, 09 February, 2006 05:26:38 PM
Clerk, U.S. District Court, ILCD

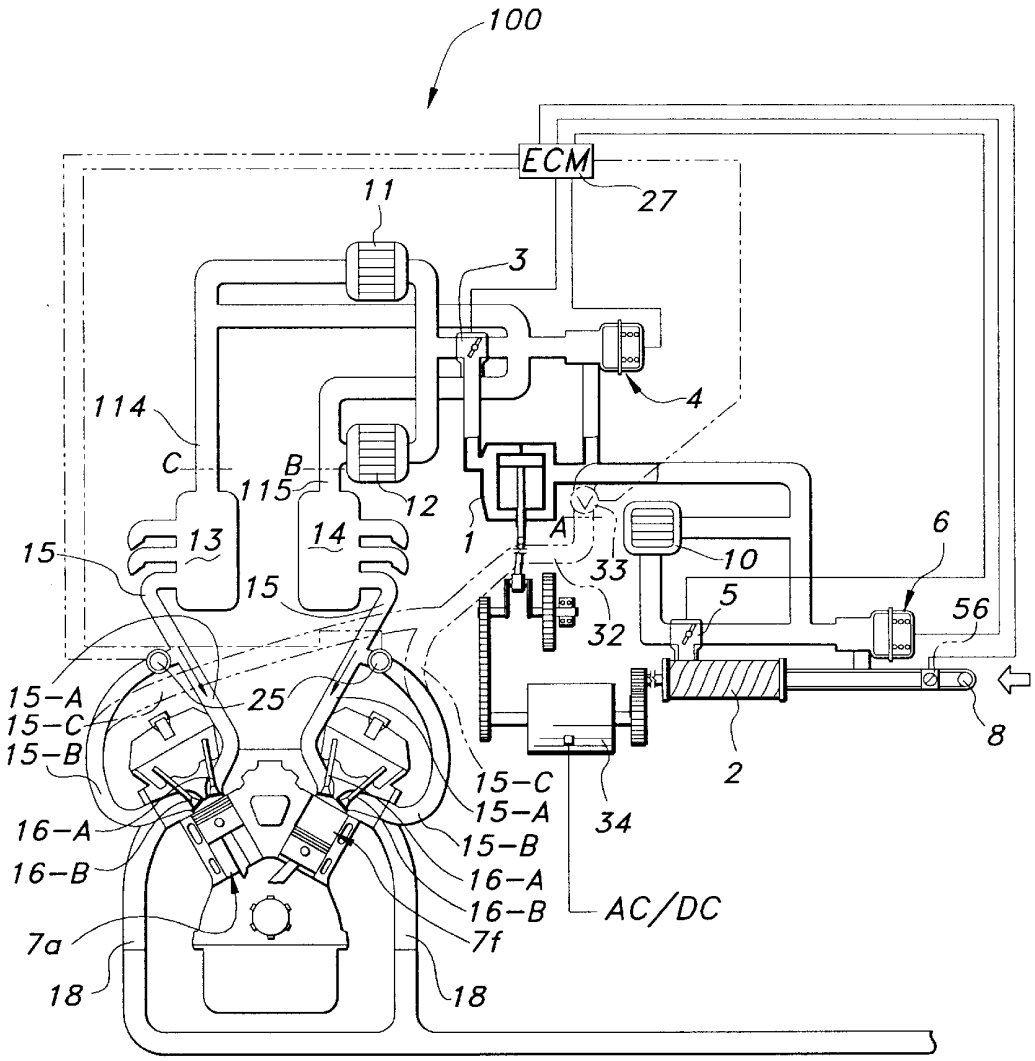

FIG 20

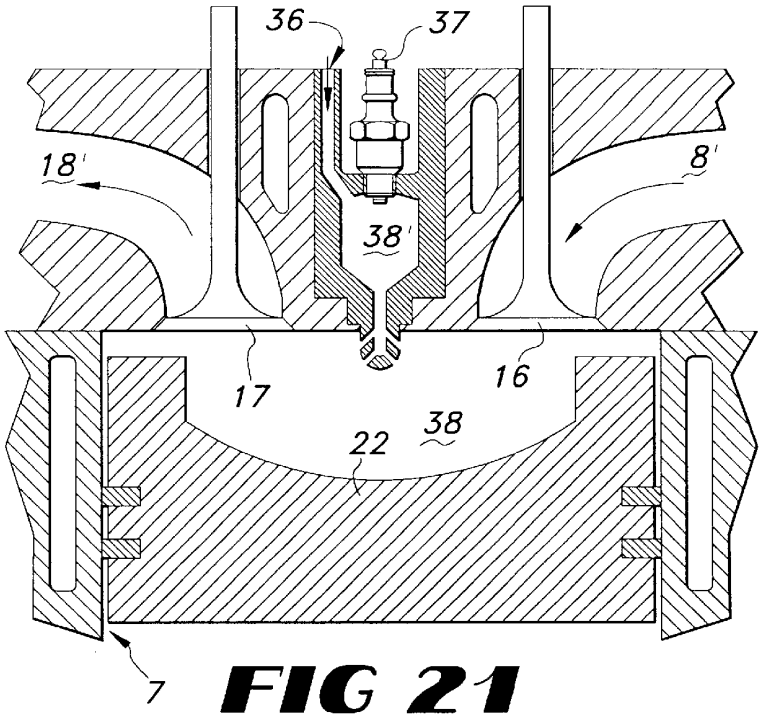

FIG 21

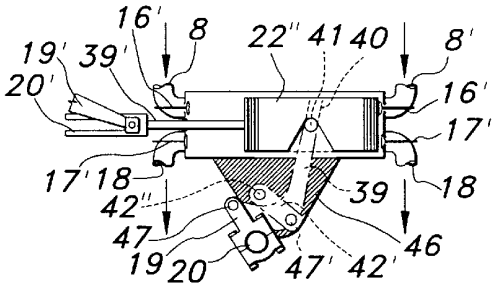

FIG 23

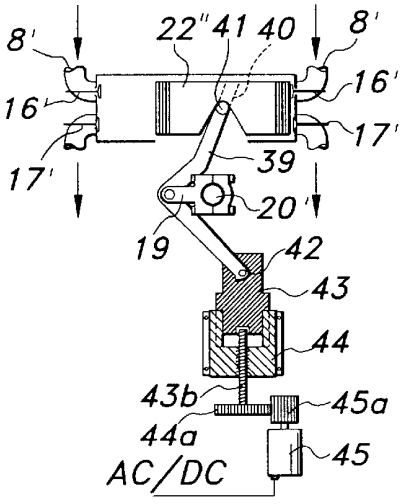

FIG 22

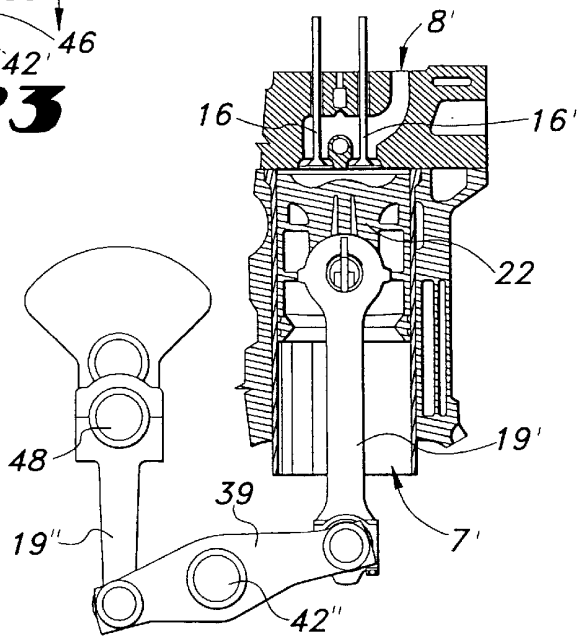

FIG 24

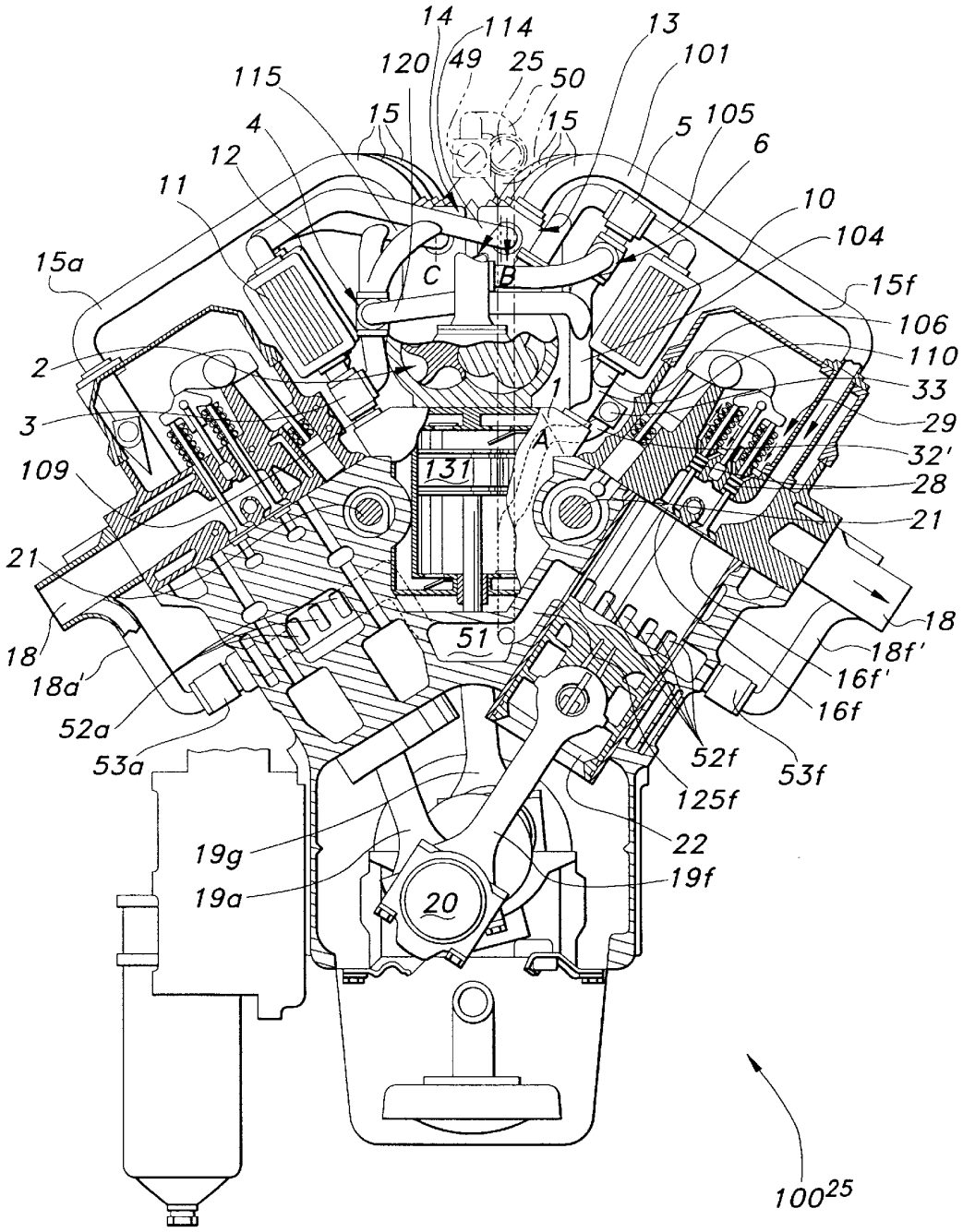
14
114
13
120
49
25
50
101
115
15
15
5
105
4
6
12
11
10
104
15a
C
B
15f
106
2
110
1
33
3
A
29
32'
109
131
28
21
21
18
51
18
18f'
18a'
16f'
16f
52a
53a
52f
53f
125f
22
19g
19f
19a
20
100

FIG 25

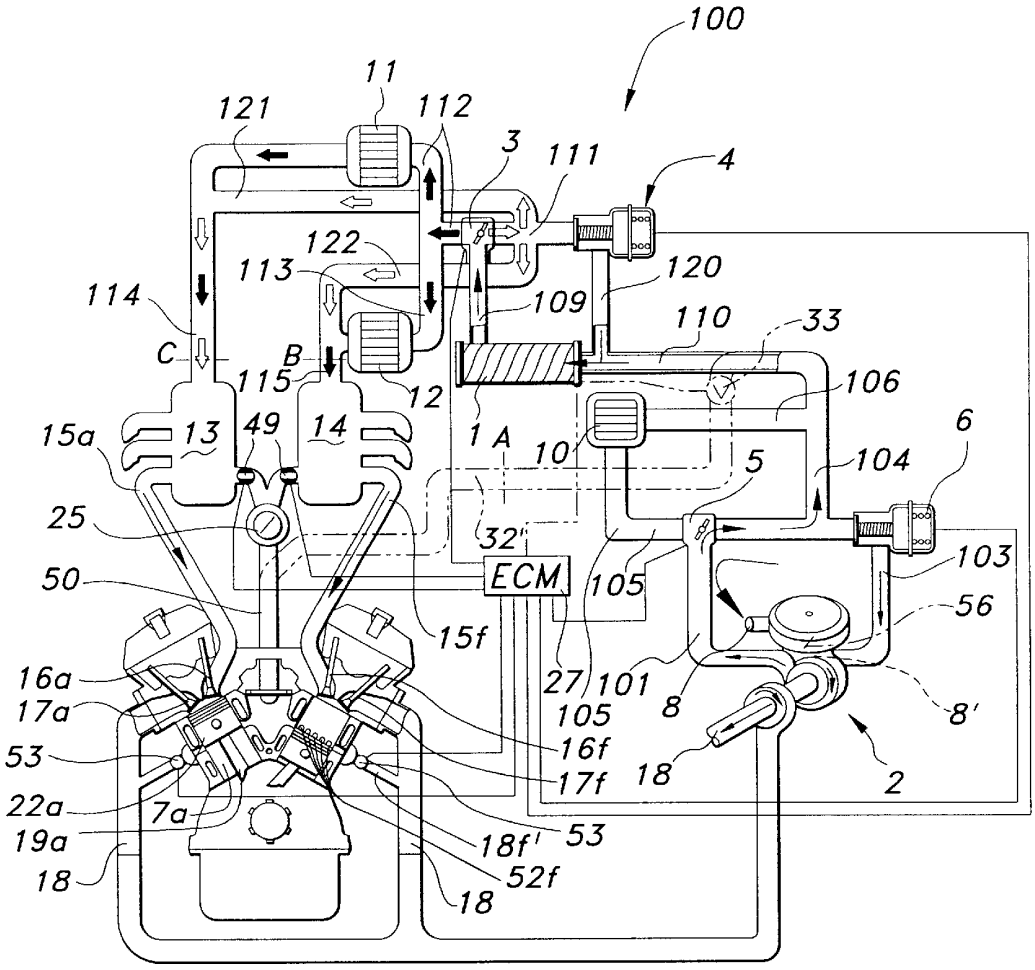
100
11
121
112
3
111
4
122
113
120
114
109
110
33
C
B
115
12
106
15a
13
49
14
1 A
10
5
104
6
25
32'
ECM
105
103
50
56
15f
27
101
8
8'
16a
17a
105
16f
53
17f
18
2
22a
7a
53
19a
18f'
52f
18
18

FIG 26

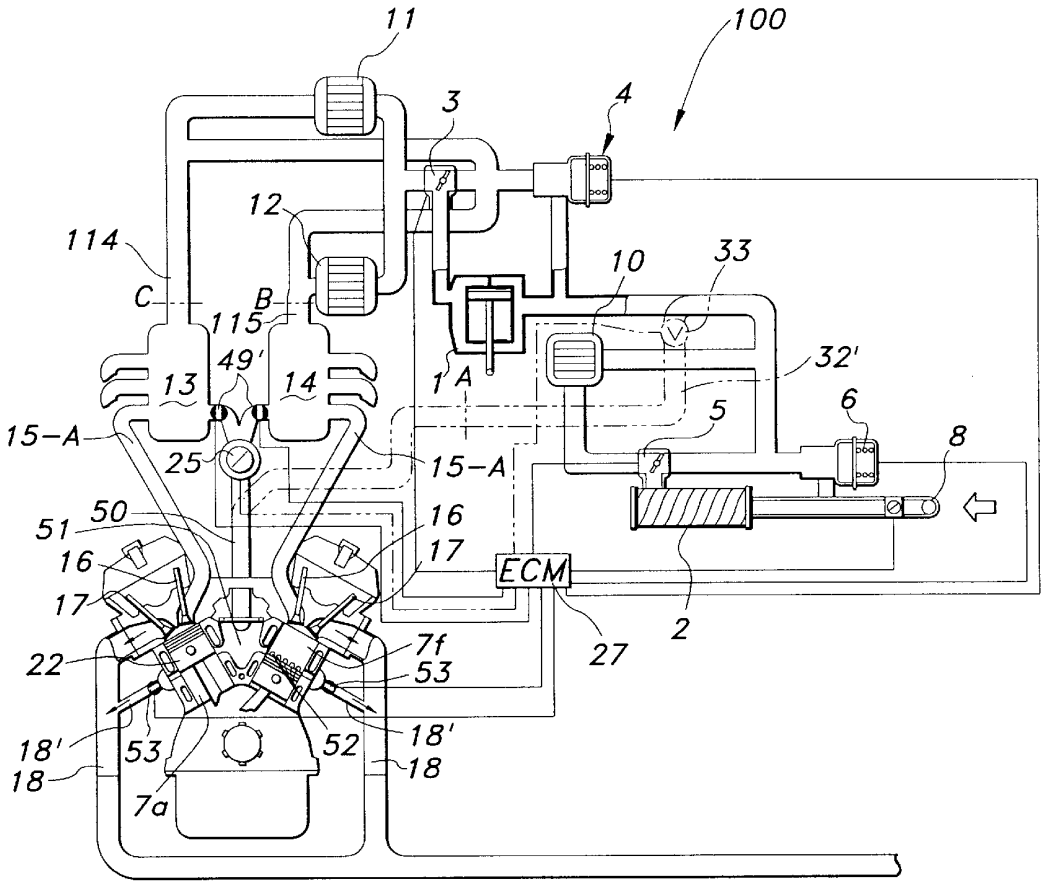
11
100
3
4
12
114
C
B
115
49'
13
14
1'A
10
33
32'
6
5
8
15-A
25
15-A
50
51
16
17
16
17
ECM
27
2
22
7f
53
18'
53
52
18'
18
18
7a

FIG 27

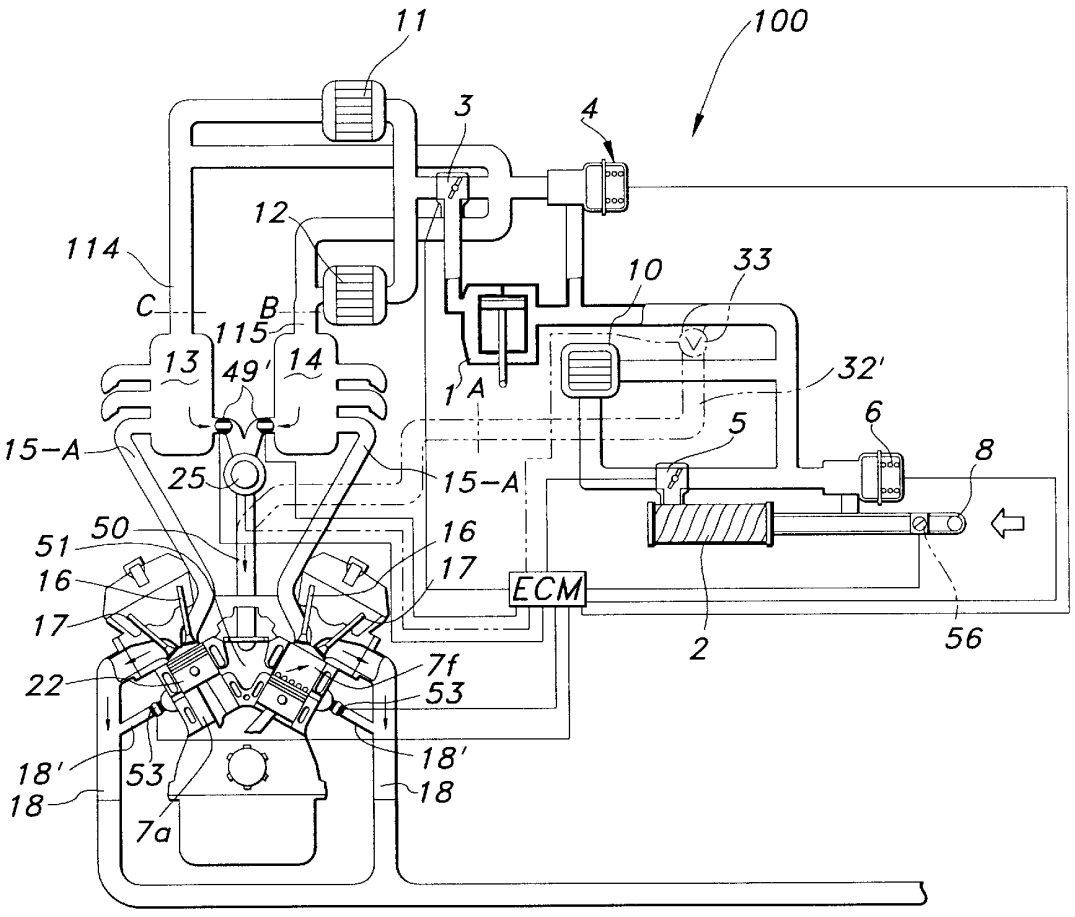
11
100
3
4
12
114
C
B
115
13
49'
14
10
33
32'
1'A
6
5
8
15-A
25
15-A
50
51
16
17
16
17
ECM
2
56
22
7f
53
18'
53
18'
18
18
7a

FIG 28

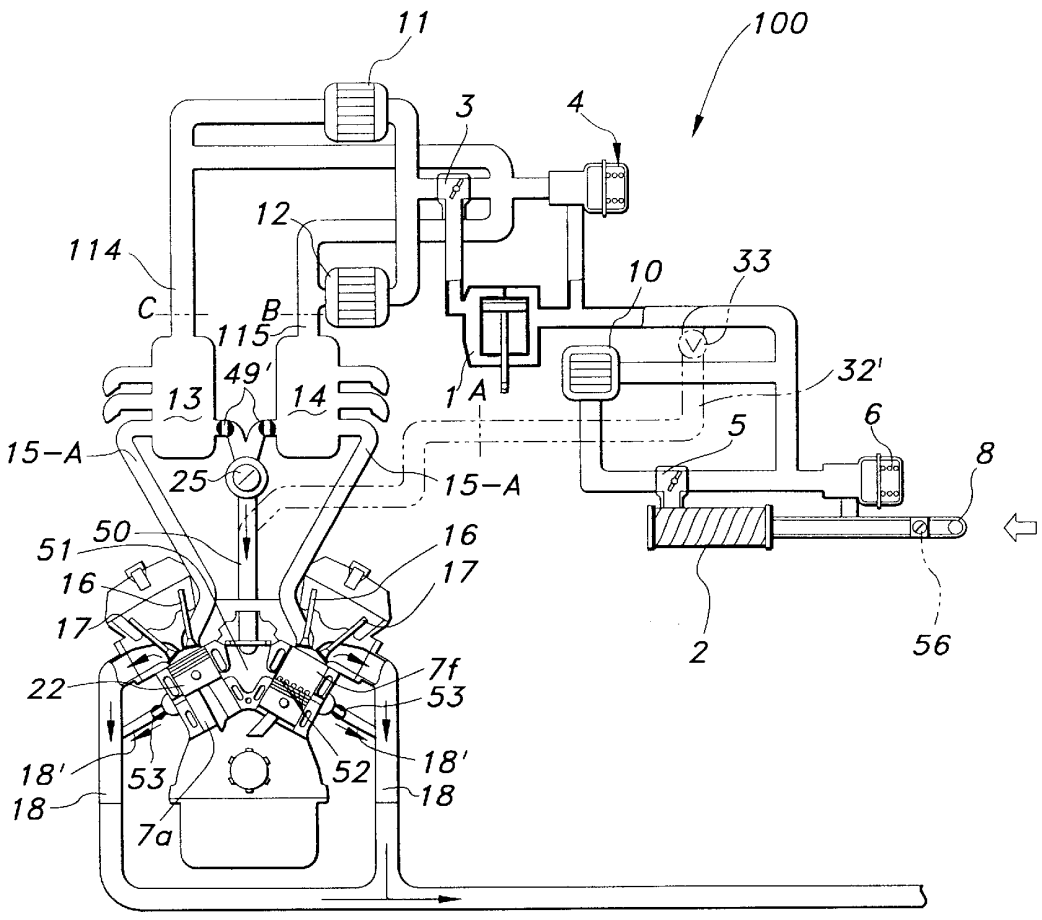
11
100
3
4
12
114
C
B
115
49'
13
14
1'A
10
33
32'
6
5
8
15-A
25
15-A
51
50
16
17
16
17
22
7f
53
18'
53
52
18'
18
18
7a
2
56

FIG 29

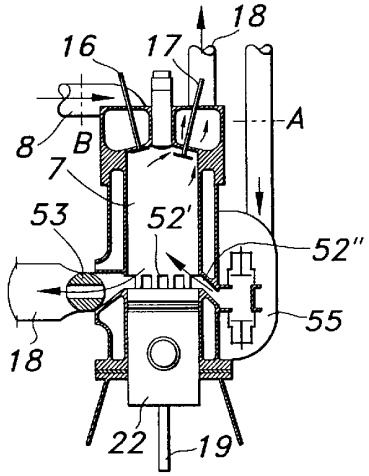
18
16
17
A
8
B
7
53
52'
52"
55
18
22
19

FIG 30

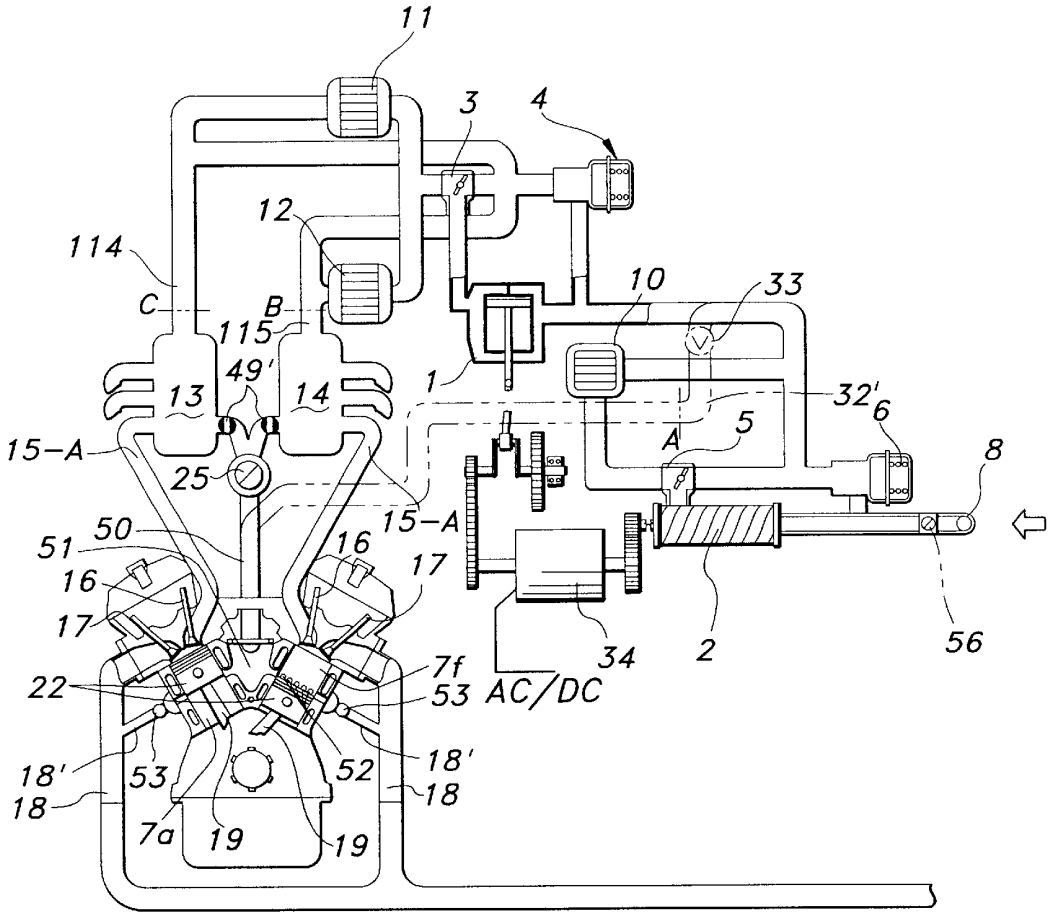
11
3
4
12
114
C
B
115
49'
13
14
10
33
1
32'
6
5
A
15-A
25
8
50
51
16
17
22
7f
53
AC/DC
34
2
56
18'
18
7a
19
52

FIG 31

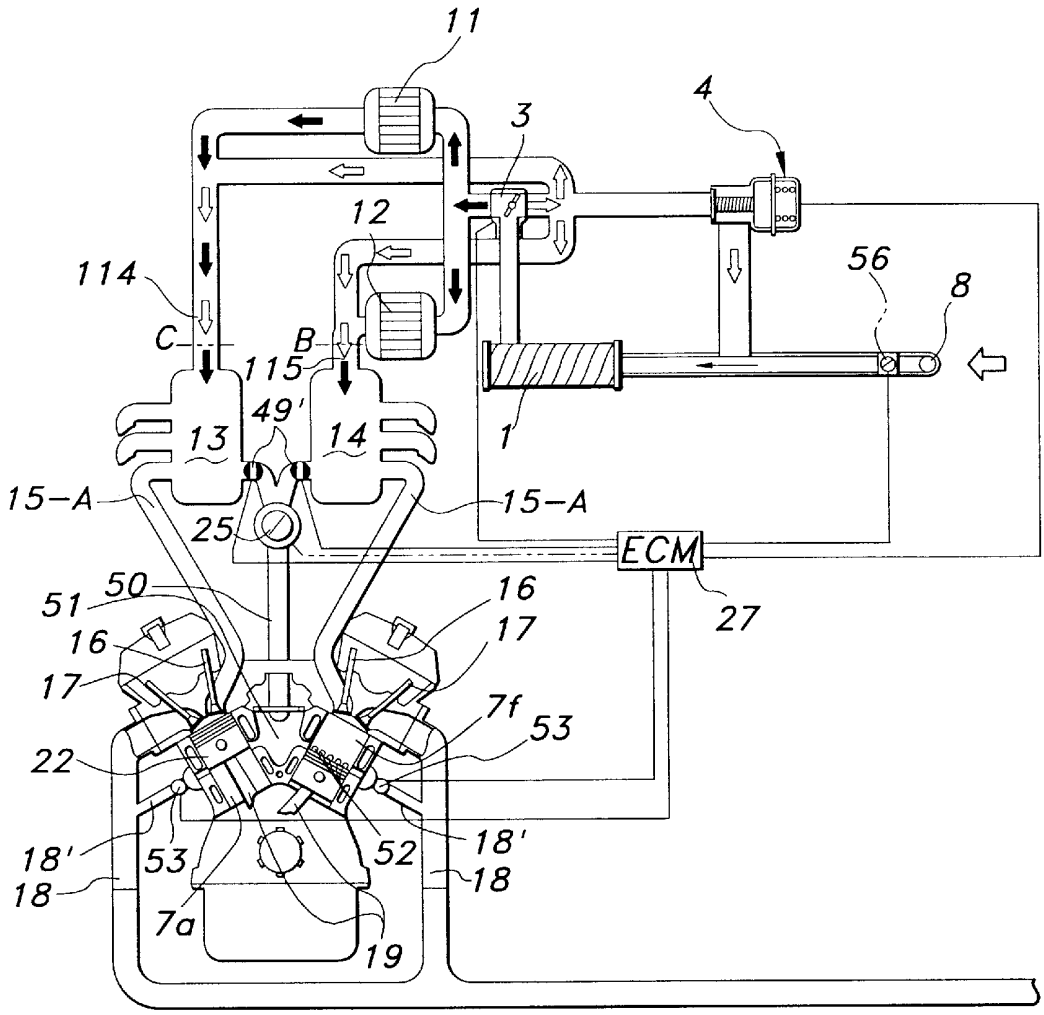
11
3
4
12
114
56
8
C
B
115
49'
13
14
1
15-A
15-A
25
ECM
27
50
51
16
17
16
17
7f
53
22
18'
53
52
18'
18
18
7a
19

FIG 32

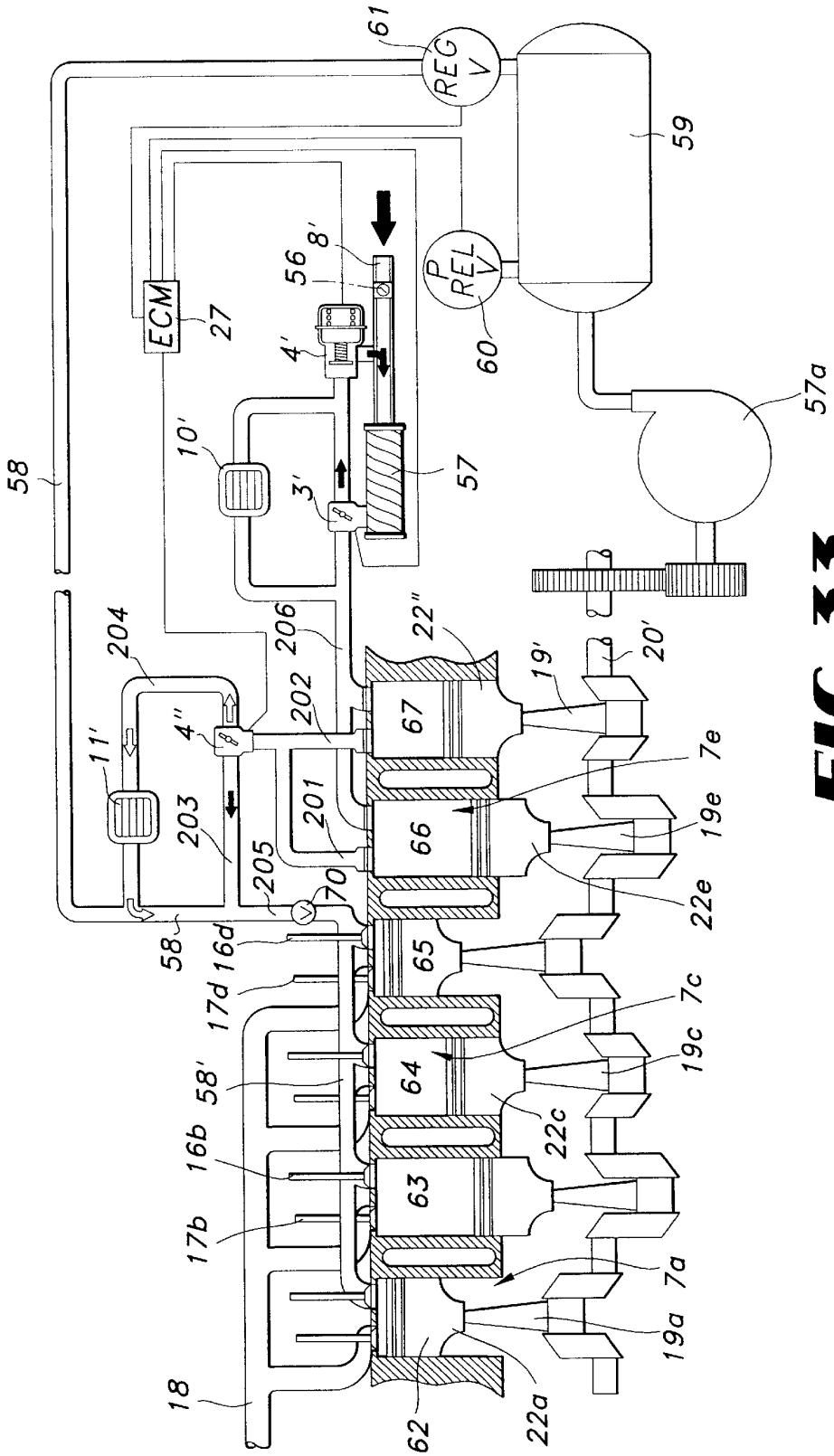
61
REG V
59
P REL V
60
57a
ECM
27
56
8'
4'
10'
3'
57
58
204
206
22"
19'
20'
202
67
7e
11'
4"
203
201
66
19e
205
70
22e
58
16d
65
17d
7c
58'
64
19c
22c
16b
63
17b
7a
19a
18
62
22a

FIG 33

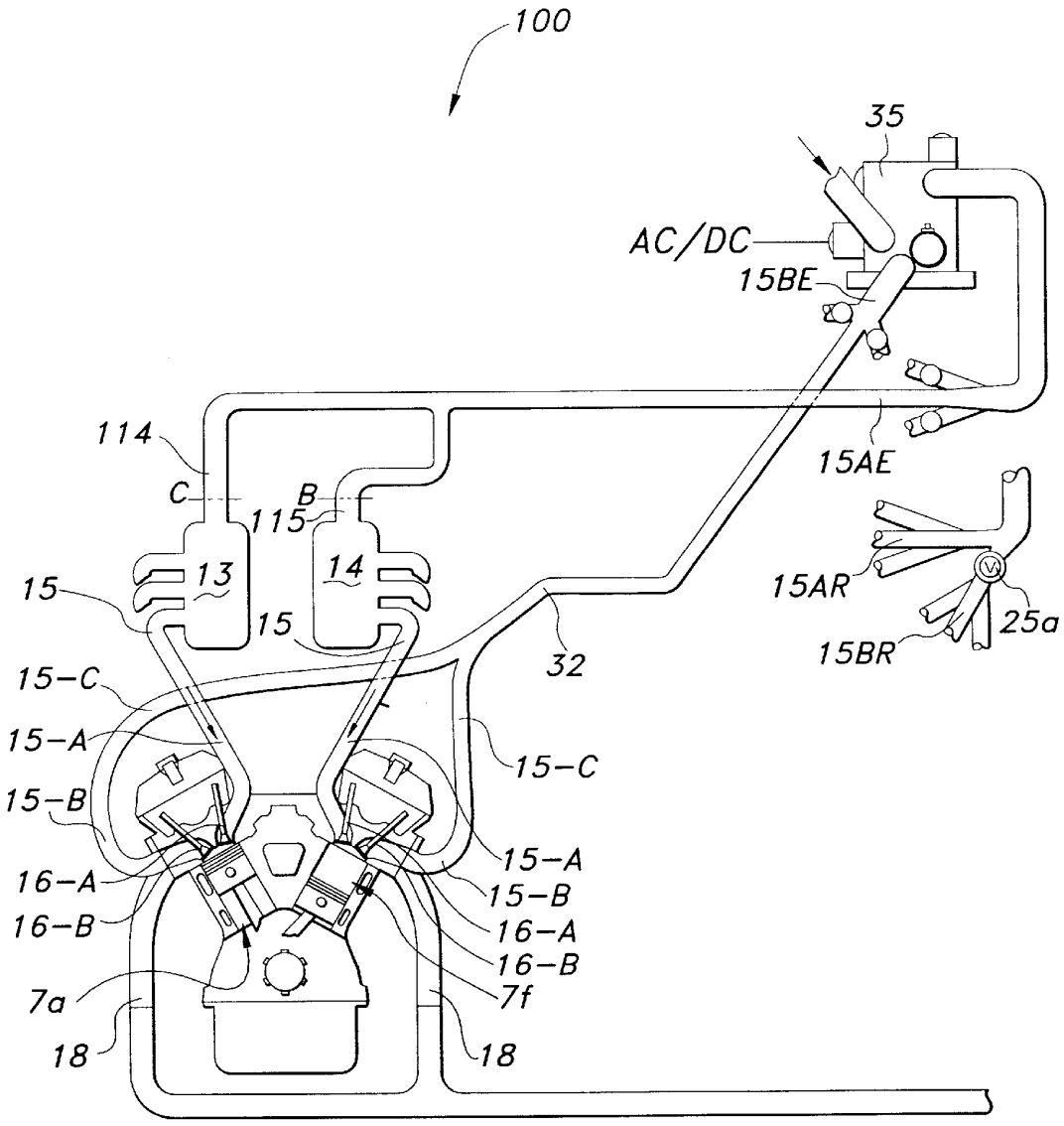
100
35
AC/DC
15BE
15AE
15AR
25a
15BR
114
C
B
115
13
14
15
15
32
15-C
15-A
15-B
16-A
16-B
7a
18
15-C
15-A
15-B
16-A
16-B
7f
18

FIG 34

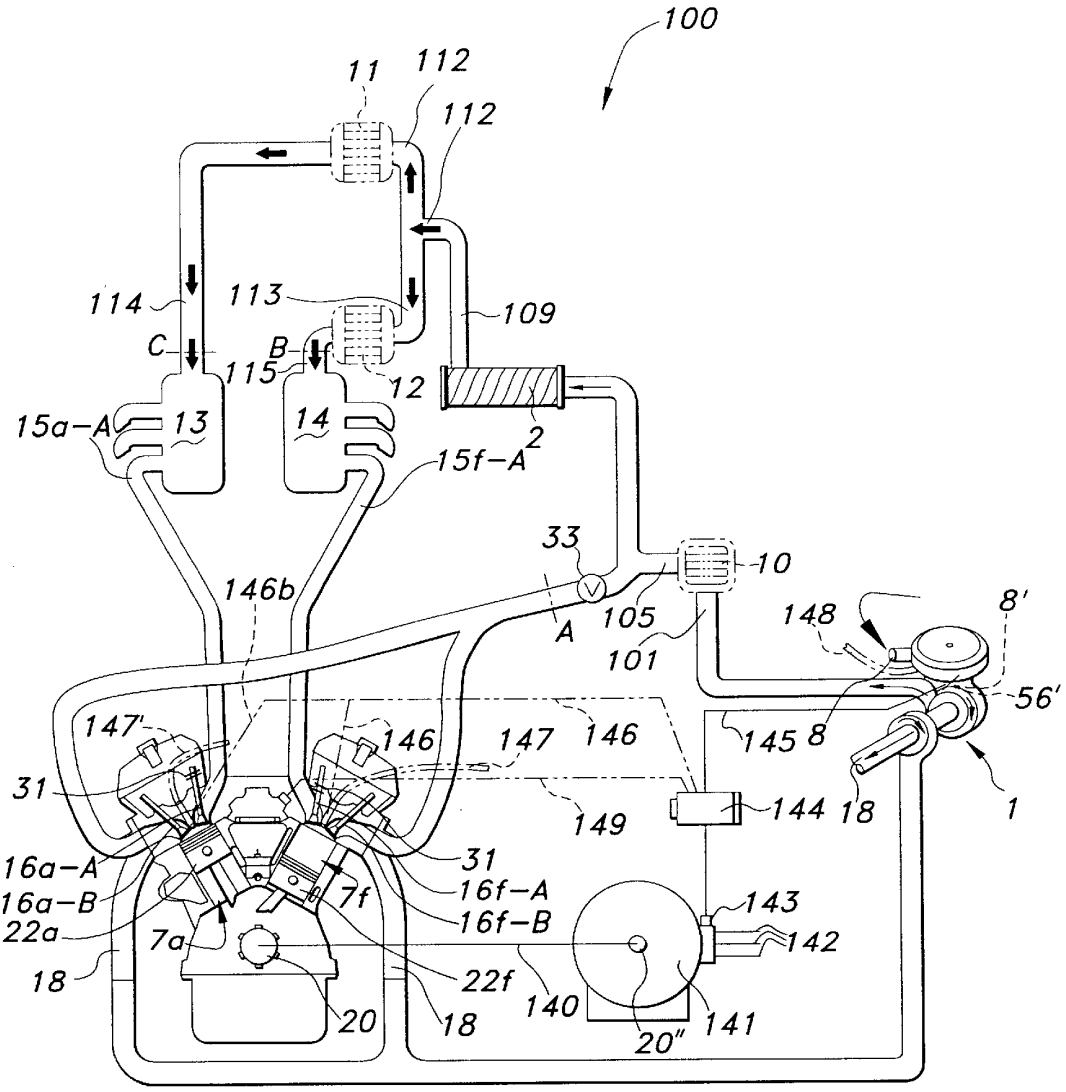
100
11
112
112
114
113
109
C
B
115
12
15a-A
13
14
2
15f-A
33
10
146b
A
105
101
148
8'
56'
147'
146
147
146
145
8
31
149
144
18
1
16a-A
16a-B
22a
18
7a
7f
31
16f-A
16f-B
143
142
22f
140
141
20
18
20"

FIG 35

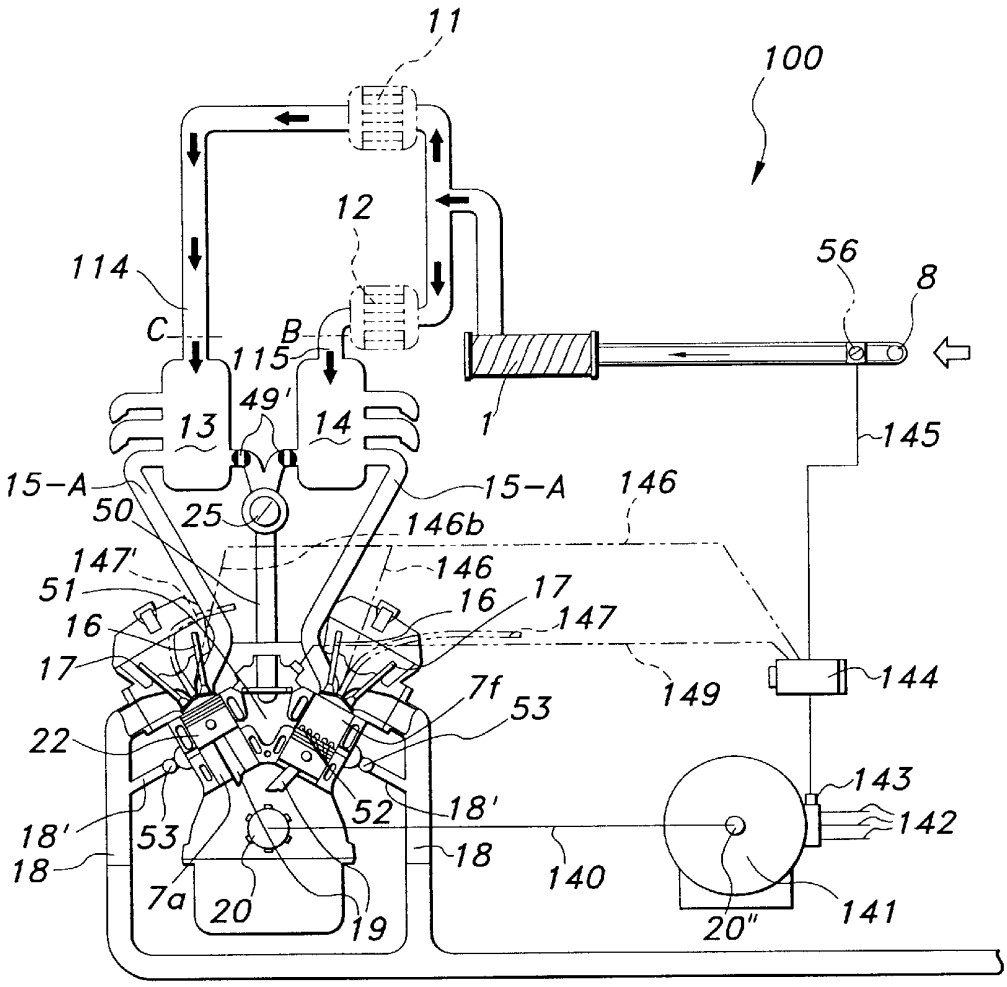
11
100
12
114
56
8
C
B
115
49'
13
14
1
145
15-A
15-A
146
50
25
146b
147'
146
51
16
17
147
16
17
149
144
7f
53
22
143
52
18'
142
18'
53
18
18
140
7a
20
19
20"
141

FIG 36

INTERNAL COMBUSTION ENGINE

RELATED APPLICATIONS

This application claims the priority of U.S. Provisional Application 60/022,102, filed Jul. 17, 1996; 60/023,460, filed Aug. 6, 1996; 60/029,260, filed Oct. 25, 1996; and 60/040,630, filed Mar. 7, 1997. Furthermore, this application is a continuation-in-part of U.S. application Ser. No. 08/841,488, filed Apr. 23, 1997, abandoned.

This invention relates to a method of deriving mechanical work from combusting gas in an internal combustion engine by means of a new thermodynamic working cycle and to reciprocating internal combustion engines for carrying out the method.

BACKGROUND OF INVENTION

It is well known that as the expansion ratio of an internal combustion engine is increased, more energy is extracted from the combustion gases and converted to kinetic energy and the thermodynamic efficiency of the engine increases. It is further understood that increasing air charge density increases both power and fuel economy due to further thermodynamic improvements. The objectives for an efficient engine are to provide a high-density charge, begin combustion at maximum density and then expand the gases as far as possible against a piston.

Conventional engines have the same compression and expansion ratios, the former being limited in spark-ignited engines by the octane rating of the fuel used. Furthermore, since in these engines the exploded gases can be expanded only to the extent of the compression ratio of the engine, there is generally substantial heat and pressure in the exploding cylinder which is dumped into the atmosphere at the time the exhaust valve opens resulting in a waste of energy and producing unnecessarily high polluting emissions.

Many attempts have been made to reduce the compression ratio and to extend the expansion process in internal combustion engines to increase their thermodynamic efficiency, the most notable one being the "Miller" Cycle engine, developed in 1947.

Unlike a conventional 4-stroke cycle engine, where the compression ratio equals the expansion ratio in any given combustion cycle, the Miller Cycle engine is a variant, in that the parity is altered intentionally. The Miller Cycle uses an ancillary compressor to supply an air charge, introducing the charge on the intake stroke of the piston and then closing the intake valve before the piston reaches the end of the inlet stroke. From this point the gases in the cylinder are expanded to the maximum cylinder volume and then compressed from that point as in the normal cycle. The compression ratio is then established by the volume of the cylinder at the point that the inlet valve closed, being divided by the volume of the combustion chamber. On the compression stroke, no actual compression starts until the piston reaches the point the intake valve closed during the intake stroke, thus producing a lower-than-normal compression ratio. The expansion ratio is calculated by dividing the swept volume of the cylinder by the volume of the combustion chamber, resulting in a more-complete-expansion, since the expansion ratio is greater than the compression ratio of the engine.

In the 2-stroke engine the Miller Cycle holds the exhaust valve open through the first 20% or so of the compression stroke in order to reduce the compression ratio of the engine. In this case the expansion ratio is probably still lower than the compression ratio since the expansion ratio is never as large as the compression ratio in conventional 2-stroke engines.

The advantage of this cycle is the possibility of obtaining an efficiency higher than could be obtained with an expansion ratio equal to the compression ratio. The disadvantage is that the Miller Cycle has a mean effective pressure lower than the conventional arrangement with the same maximum pressure, but with no appreciable improvements in emissions characteristics.

The Miller Cycle is practical for engines that are not frequently operated at light-loads, because at light-load operation the mean cylinder pressure during the expansion stroke tends to be near to, or even lower than, the friction mean pressure. Under such circumstances the more-complete-expansion portion of the cycle may involve a net loss rather than a gain in efficiency.

This type of engine may be used to advantage where maximum cylinder pressure is limited by detonation or stress considerations and where a sacrifice of specific output is permissible in order to achieve the best possible fuel economy. The cycle is suitable only for engines that operate most of the time under conditions of high mechanical efficiency, that is, at relatively low piston speeds and near full load.

SUMMARY OF THE INVENTION

Briefly described, the present invention comprises an internal combustion engine system (including methods and apparatuses) for managing combustion charge densities, temperatures, pressures and turbulence in order to produce a true mastery within the power cylinder in order to increase fuel economy, power, and torque while minimizing polluting emissions. In its preferred embodiments, the method includes the steps of (i) producing an air charge, (ii) controlling the temperature, density and pressure of the air charge, (iii) transferring the air charge to a power cylinder of the engine such that an air charge having a weight and density selected from a range of weight and density levels ranging from atmospheric weight and density to a heavier-than-atmospheric weight and density is introduced into the power cylinder, and (iv) then compressing the air charge at a lower-than-normal compression ratio, (v) causing a predetermined quantity of charge-air and fuel to produce a combustible mixture, (vi) causing the mixture to be ignited within the power cylinder, and (vii) allowing the combustion gas to expand against a piston operable in the power cylinder with the expansion ratio of the power cylinder being substantially greater than the compression ratio of the power cylinders of the engine. In addition to other advantages, the invented method is capable of producing mean effective [cylinder] pressures ("mep") in a range ranging from lower-than-normal to higher-than-normal. In the preferred embodiments, the mean effective cylinder pressure is selectively variable (and selectively varied) throughout the mentioned range during the operation of the engine. In an alternate embodiment related to constant speed-constant load operation, the mean effective cylinder pressure is selected from the range and the engine is configured, in accordance with the present invention, such that the mean effective cylinder pressure range is limited, being varied only in the amount required for producing the power, torque and speed of the duty cycle for which the engine is designed.

In its preferred embodiments, the apparatus of the present invention provides a reciprocating internal combustion engine with at least one ancillary compressor for compress-

ing an air charge, an intercooler through which the compressed air can be directed for cooling, power cylinders in which the combustion gas is ignited and expanded, a piston operable in each power cylinder and connected to a crankshaft by a connecting link for rotating the crankshaft in response to reciprocation of each piston, a transfer conduit communicating the compressor outlet to a control valve and to the intercooler, a transfer manifold communicating the intercooler with the power cylinders through which manifold the compressed charge is transferred to enter the power cylinders, an intake valve controlling admission of the compressed charge from the transfer manifold to said power cylinders, and an exhaust valve controlling discharge of the exhaust gases from said power cylinders. For the 4-stroke engine of this invention, the intake valves of the power cylinders are timed to operate such that charge air which is equal to or heavier than normal can be maintained within the transfer manifold when required and introduced into the power cylinder during the intake stroke with the intake valve closing at a point substantially before piston bottom dead center position or, alternatively, with the intake valve closing at some point during the compression stroke, to provide a low compression ratio. In some designs another intake valve can open and close quickly after the piston has reached the point the first intake valve closed in order to inject a temperature adjusted high pressure secondary air charge still at such a time that the compression ratio of the engine will be less than the expansion ratio, and so that ignition can commence at substantially maximum charge density. The 2-stroke engine of this invention differs in that the intake valves of the power cylinders are timed to operate such that an air charge is maintained within the transfer manifold and introduced into the power cylinder during the scavenging-compression (the 2nd) stroke at such a time that the power cylinder has been scavenged by low pressure air and the exhaust valve has closed, establishing that the compression ratio of the engine will be less than the expansion ratio of the power cylinders. Means are provided for causing fuel to be mixed with the air charge to produce a combustible gas, the combustion chambers of the power cylinders are sized with respect to the displaced volume of the power cylinder such that the exploded combustion gas can be expanded to a volume substantially greater than the compression ratio of the power cylinder of the engine.

The chief advantages of the present invention over existing internal combustion engines are that it provides a compression ratio lower than the expansion ratio of the engine, and provides, selectively, a mean effective cylinder pressure higher than the conventional engine arrangement with the same or lower maximum cylinder pressure than that of prior art engines.

This allows greater fuel economy, and production of greater power and torque at all RPM, with low polluting emissions. Because charge densities, temperatures and pressures are managed, light-load operation is practical even for extended periods, with no sacrifice of fuel economy. The new working cycle is applicable to 2-stroke or 4-stroke engines, both spark-ignited and compression-ignited. For spark-ignited engines the weight of the charge can be greatly increased without the usual problems of high peak temperatures and pressures with the usual attendant problem of combustion detonation and pre-ignition. For compression-ignited engines, the heavier, cooler, more turbulent charge provides low peak cylinder pressure for a given expansion ratio and allows richer, smoke-limited air-fuel ratio giving increased power with lower particulate and NO_x emissions. Compression work is reduced due to reduced heat transfer during the compression process. Engine durability is improved because of an overall cooler working cycle and a cooler than normal exhaust. It also provides a means of regenerative braking for storing energy for subsequent positive power cycles without compression work and for transient or "burst" power which further increases the overall efficiency of the engine.

All of the objects, features and advantages of the present invention cannot be briefly stated in this summary, but will be understood by reference to the following specifications and the accompanying drawings.

BRIEF DESCRIPTION OF THE DRAWINGS

Embodiments of internal combustion engines according to the invention will now be described, by way of example, with reference to the accompanying drawings, in which:

FIG. **1** is a perspective view (with portions in cross-section) of the cylinder block and head of a six cylinder internal combustion engine operating in a 4-stroke cycle, and representing a first embodiment of the apparatus of the present invention from which a first method of operation can be performed and will be described. Among its other components, this embodiment is seen as having one ancillary compressor, a cooling system and valves to control charge pressures, density and temperature.

FIG. **2** is a schematic drawing of a six cylinder internal combustion engine, similar to the engine of FIG. **1**, operating in a 4-stroke cycle, and representing a second embodiment of the apparatus of the present invention from which a second method of operation can be performed and will be described. Among its other components, this embodiment is seen as having two compressors, three intercoolers, four control valves, dual air paths for both the primary and the ancillary compressors, dual manifolds and showing a means of controlling charge-air pressures, density and temperatures.

FIG. **3** is a perspective view (with portions in cross-section) of the cylinder block and head of a six cylinder internal combustion engine operating in a 4-stroke cycle, and representing a third embodiment of the apparatus of the present invention from which a third method of operation can be performed and will be described.

FIG. **4** is a perspective view (with portions in cross-section) of the cylinder block and head of a six cylinder internal combustion engine operating in a 4-stroke cycle, and representing a fourth embodiment of the apparatus of the present invention from which a fourth method of operation can be performed and will be described. Among its other components, this embodiment is seen as having an ancillary compressor, with two charge-air intake ducts and dual intake air routes, one of which is low pressure and one which is high pressure, and both leading to the same power cylinder, a cooling system and valves for controlling charge-air pressures, density and temperature and an ancillary atmospheric air intake system.

FIG. **4**-B is a perspective view (with portions in cross-section) of an engine similar to the engine of FIG. **4** with the exception that there is only one atmospheric air intake which supplies charge-air to the power cylinders at two different pressure levels.

FIG. **4**-C is a schematic view of an exhaust and an air intake system of an engine showing a means of re-burning exhaust gases in order to reduce polluting emissions.

FIG. **5** is a perspective view (with portions in cross-section) of the cylinder block and head of a six cylinder

internal combustion engine operating in a 4-stroke cycle, and representing a fifth embodiment of the apparatus of the present invention from which a fifth method of operation can be performed and will be described. Among its other components, this embodiment is seen as having one atmospheric air intake, an ancillary compressor with two charge-air routes, one of which is low pressure and which has two optional routes, and one which is high pressure, both leading to the same power cylinder, and control valving means and air coolers for varying charge densities, pressures and temperatures in the combustion chamber of the engine.

FIG. **6** is a part sectional view through one power cylinder of the 4-stroke engine of FIG. **4**, FIG. **4**-B, FIG. **5**, FIG. **7** or FIG. **33** at the intake valves showing an alternative method (adaptable to other embodiments of the present invention) of preventing charge-air back flow and of automatically adjusting the charge pressure-ratio of the cylinder during the air charging process.

FIG. **7** is a schematic drawing of a six cylinder, 4-stroke engine representing yet another embodiment of the apparatus of the present invention, from which yet another method of operation can be performed and will be described, and depicting three alternative systems (two in phantom lines) of inducting a low pressure primary air charge. Among its other components, this embodiment is seen as having three air coolers and dual manifolds and the means of controlling the temperature, density and pressure of the charge by an engine control module and by valving variations.

FIG. **8** is a perspective view (with portions in cross-section) of the cylinder block and head of a six cylinder internal combustion engine, operating in a 2-stroke cycle, and representing a first 2-stroke embodiment of the apparatus of the present invention from which still another method of operation can be performed and will be described. Among its other components, this embodiment is seen as having a primary and an ancillary compressor, a cooling system and conduits and valves to adjust charge density, temperature and pressure according to the invention.

FIG. **9** is a perspective view (with portions in cross-section) of the cylinder block and head of a six cylinder internal combustion engine operating in a 2-stroke cycle, and representing a second 2-stroke embodiment of the apparatus of the present invention from which still another method of operation of can be performed and will be described. Among its other components, this embodiment is seen as having one atmospheric air intake, a primary and an ancillary compressor, with two charge-air routes, one of which is low pressure which has alternate routes, and one of which is high pressure, and both leading to the same power cylinder, and control valving means and air coolers for varying charge densities, pressures and temperatures in the combustion chamber of the engine.

FIG. **9**-B is a schematic drawing of a six cylinder, 2-stroke engine representing yet another embodiment of the apparatus of the present invention, from which yet another method of operation can be performed and will be described, and depicting two alternative systems (one in phantom lines) of inducting a low pressure primary air charge. Among its other components, this embodiment is seen as having three air coolers and dual manifolds and the means of controlling the temperature, density and pressure of the charge by an engine control module and by valving variations.

FIG. **10** is a part sectional view through one power cylinder of the 2-stroke engine of FIG. **9**, at the intake valves, showing an alternative method (adaptable to other embodiments of the present invention) of preventing charge-air back flow during high pressure air charging and showing a pressure balanced valve having a pumped oil/air cooling system.

FIG. **11** is a perspective view (with portions in cross-section) of the cylinder block and head of a six cylinder internal combustion engine operating in a 2-stroke cycle, and representing a third 2-stroke embodiment of the apparatus of the present invention from which still another method of operation of can be performed and will be described. Among its other components, this embodiment is seen as having a primary and an ancillary compressor, a cooling system and conduits and valves to adjust charge density, temperature and pressure and having a single air intake runner for each power cylinder with at least two intake valves arranged in such a manner that one intake valve can operate with timing independent of the other intake valve.

FIG. **12** is a pressure-volume diagram comparing the cycle of the engine of this invention with that of a high-speed diesel engine.

FIG. **13** is a chart showing improvements possible in the engine of this invention in effective compression ratios, peak temperatures and pressures, charge densities and expansion ratios, in comparison with a popular heavy-duty 2-stroke diesel engine.

FIG. **14** is a chart showing improvements possible in the engine of this invention in effective compression ratios, peak temperatures and pressures, charge densities and expansion ratios, in comparison with a popular heavy-duty, 4-stroke diesel engine.

FIG. **15** is a schematic drawing of suggested operating parameters for operation of the engines, both 2-stroke and 4-stroke, of FIGS. **5**–**7** and FIGS. **9**–**10** showing dual intercoolers for the main compressor, a single intercooler for a secondary compressor and a control system and valves for selecting different charge-air paths for light-load operations, and depicting (one in phantom lines) two alternative systems of inducting a low pressure primary air charge.

FIG. **16** shows suggested valve positions for supplying manifolds **13** and **14** with an air charge optimum for medium-load operation for the engines of FIGS. **5**–**7** and FIGS. **9**–**10**. For medium-load operation the shutter valve **5** of compressor **2** would be closed and the air bypass valve **6** would be open to pass the air charge uncooled without compression to the intake of compressor **1** where closed shutter valve **3** and closed air bypass valve **4** directs the air charge now compressed by compressor **1** past the intercoolers to manifolds **13** and **14** with the air compressed and heated by compressor **1**, for medium-load operation.

FIG. **17** shows a suggested scenario for providing the engines of FIGS. **5**–**7** and FIGS. **9**–**10** with a high density air charge for heavy duty, high power output operation. FIG. **17** shows all shutter valves **5** and **3** and all air bypass valves **6** and **4** closed completely so that the primary stage of compression is operative and a second stage of compression is operative and the entire air charge, with the exception of any going through conduit **32** to intake valve **16**-B, is being passed through the intercoolers **10**, **11** and **12** to produce a very high density air charge to manifolds **13** and **14** and to the engines power cylinders for heavy-load operation.

FIG. **18** shows a schematic drawing representing any of the engines of FIG. **3**–FIG. **11**, depicting an alternative type of auxiliary compressor **2'** and a system of providing a means for disabling or cutting out the auxiliary compressor when high charge pressure and density is not needed. For relieving compressor **2'** of work, shutter valve **5** is closed

and air bypass valve is opened so that air pumped through compressor **2'** can re-circulate through compressor **2'** without requiring compression work.

FIG. **19** is a schematic drawing representing the engines shown in FIGS. **5–7** and FIGS. **9–10** and having two compressors, and one intercooler for one stage of compression, dual intercoolers for a second stage of compression, dual manifolds, four valves and an engine control module (ECM) and illustrating means of controlling charge-air density, pressure and temperature by varying directions and amounts of air flow through the various electronic or vacuum operated valves and their conduits.

FIG. **20** is a schematic drawing showing optional electric motor drive of the air compressors of the engines of FIG. **1** through FIG. **11**.

FIG. **21** is a schematic transverse sectional view of a pre-combustion chamber, a combustion chamber and associated fuel inlet ducts and valving suggested for gaseous or liquid fuel operation for the engines of this invention or for any other internal combustion engine.

FIG. **22** is a part sectional view through one cylinder of an engine showing an alternate construction whereby there is supplied two firing strokes each revolution of the shaft for a 2-stroke engine and one firing stroke each revolution of the shaft for a 4-stroke engine, having a beam which pivots on its lower extremity, a connecting rod which is joined midpoint of the beam and is fitted to the crankshaft of the engine, and whereby a means is provided for varying the compression ratio of the engine at will.

FIG. **23** is a part sectional view through one cylinder of an engine showing an alternate construction whereby there is supplied two firing strokes each crankshaft revolution for a 2-stroke engine and one firing stroke each revolution of the shaft for a 4-stroke engine, and whereby the beam connecting the connecting rod and the piston pivots at a point between the piston and the piston connecting rod, which connecting rod is attached to the crankshaft of the engine, and an alternate preferred means of power take-off from the piston by a conventional piston rod, cross-head and connecting rod arrangement.

FIG. **24** is a part sectional view through one cylinder of an engine showing a means of providing extra burn-time each firing stroke in a 2-stroke or 4-stroke engine.

FIG. **25** is a perspective view of the cylinder block and head of a six cylinder internal combustion engine operating in a 2-stroke cycle and representing a yet another embodiment of the apparatus of the present invention from which still another method of operation of can be performed and will be described. Among its other components, this embodiment is seen as having scavenging ports in the bottom of the piston sleeves and having a primary and an ancillary compressor, a cooling system, valves and conduits to control the pressure, density and temperature of the charge-air, and valves and conduits to supply scavenging air to the cylinders.

FIG. **26** is a schematic drawing of an engine similar to the engine of FIG. **25** showing one intercooler for one optional stage of compression, dual intercoolers for a primary compression stage and showing a control system (including engine control module (ECM) and valving) for controlling charge-air density, weight, temperature and pressure by controlling directions and amounts of air flow through the various valves, conduits and an optional throttle valve, and showing two optional routes for supplying scavenging air to the scavenging ports in the bottom of the cylinders, and alternative routes for the exhausted gases to exit the engine.

FIG. **27** through FIG. **30** are schematic drawings of the engine of FIG. **25** and FIG. **26** showing four alternate methods suggested for efficient scavenging of the engines, FIG. **27** and FIG. **28** also show a schematic drawing for an engine control module (ECM) and valving to control charge-air and scavenging air at a pressure, density and temperature deemed appropriate for each.

FIG. **31** is a schematic drawing showing suggested optional electric motor drive for the engine's air compressors.

FIG. **32** is a schematic drawing of the 2-stroke engine of FIG. **25** and FIG. **26**, having only one compressor for supplying both charge-air and scavenging air, and showing a control system and means of controlling charge and scavenging air at a pressure, density and temperature deemed appropriate for each, and showing means of channeling the air through different paths for the same purpose;

FIG. **33** is a schematic transverse sectional view through a six cylinder engine having two compressor cylinders, four power cylinders, one supercharger, five regulatory valves, and showing an engine control module (ECM) for controlling charge temperatures, density and weight, and adopted for storage of compressed air compressed by regenerative braking, or for storage of bleed-air produced in some industrial processes, in any of the engines of this invention.

FIG. **34** is a schematic drawing representing any of the engines of the present invention and showing an alternate embodiment which includes a separate, electric-powered air compressor and, alternatively, an entrance conduit leading from a supply of waste or "bleed" compressed air for supplying charge-air to the engine (or to a plurality of engines), whereby the need for engine-powered compressors is eliminated.

FIG. **35** is a schematic drawing representing any of the engines of the present invention depicted in an alternate embodiment which is configured to operate as a constant load and constant speed engine. This constant load and constant speed engine embodiment of the present invention is shown as including both a primary and an ancillary compressor with optional intercoolers for providing two stages of pre-compressed charge-air, either optionally intercooled or adiabatically compressed.

FIG. **36** is a schematic drawing representing any of the engines of the present invention, and depicting a constant load and constant speed engine in accordance with an alternate embodiment of the present invention in which there is provided a single compressor with optional intercoolers for providing a single stage of pre-compressed charge-air, either optionally intercooled or adiabatically compressed.

DETAILED DESCRIPTION OF THE DRAWINGS

With reference now in greater detail to the drawings, a plurality of alternate, preferred embodiments of the apparatus of the Improved Internal Combustion Engine **100** of the present invention are depicted. Like components will be represented by like numerals throughout the several views; and, in some but not all circumstances, as the writer might deem necessary (due to the large number of embodiments), similar but alternate components will be represented by superscripted numerals (e.g., **100'**). When there are a plurality of similar components, the plurality is often times referenced herein (e.g., six cylinders **7***a*–**7***f*), even though fewer than all components are visible in the drawing. Also, components which are common among multiple cylinders are sometimes written with reference solely to the common numeral, for ease of drafting—e.g. piston **22***a*–**22***f*=> piston

22. In an effort to facilitate the understanding of the plurality of embodiments, (but not to limit the disclosure) some, but not all, sections of this Detailed Description are sub-titled to reference the system or sub-system detailed in the subject section.

The invented system of the present invention is, perhaps, best presented by reference to the method(s) of managing combustion charge densities, temperatures, pressures and turbulence; and the following description attempts to describe the preferred methods of the present invention by association with and in conjunction with apparatuses configured for and operated in accordance with the alternate, preferred methods.

Some, but not necessarily all, of the system components that are common to two or more of the herein depicted embodiments include a crankshaft **20**, to which are mounted connecting rods **19***a*–**1 9***f*, to each of which is mounted a piston **22***a*–**22***f*; each piston traveling within a power cylinder **7***a*–**7***f*; air being introduced into the cylinders through inlet ports controlled by intake valves **16**, and air being exhausted from the cylinders through exhaust ports controlled by exhaust valves **17**. The interaction, modification and operation of these and such other components as are deemed necessary to an understanding of the various embodiments of the present invention are expressed below.

The Engine **100**[1] of FIG. **1**

Referring now to FIG. **1**, there is shown a six cylinder reciprocating internal combustion engine **100**[1] in which all of the cylinders **7***a*–**7***f* (only one of which is shown in a sectional view) and associated pistons **22***a*–**22***f* operate in a 4-stroke cycle and all power cylinders are used for producing power to a common crankshaft **20** via connecting rods **19***a*–**19***f*, respectively. An ancillary compressor **2** (herein depicted as a Lysholm rotary compressor) selectably supplies air which has been compressed, or allows delivery of air therethrough at atmospheric pressure, to manifolds **13** and **14** and to cylinders **7***a*–**7***f*, which cylinders operate in a 4-stroke cycle. Valves **3**, **5** and **6** and intercoolers **10**, **11** and **12** are used, in the preferred embodiments, to control air charge density, weight, temperature and pressure. The intake valves **16***a*–**16***f*, **16***a*'–**16***f* are timed to control the compression ratio of the engine **100**'. The combustion chambers are sized to establish the expansion ratio of the engine.

The engines **100**[1]–**100**[5], **100**[7] of FIG. **1**, FIG. **2**, FIG. **3**, FIG. **4**, FIG. **5**, and FIG. **7**, respectively, have camshafts **21** fitted with cams and are arranged to be driven at one-half the speed of the crankshaft in order to supply one power stroke for every two revolutions of the crankshaft, for each power piston. The rotary compressors **2** of FIG. **1**, FIG. **2**, FIG. **3**, FIG. **4**, FIG. **4**-B, FIG. **5**, FIG. **7** and FIG. **33** can be driven by a ribbed V-belt and would have a step-up gear between the V pulley and the compressor drive shaft, the rotary compressors could also be fitted with a variable-speed step-up gear as in some aircraft engines. The reciprocating compressor **1** of FIG. **3** is shown as having double-acting cylinders linked to the crankshaft **20** by a connecting rod **19***g*; and the crankshaft **20** to which it is linked by connecting rod **19***g* would supply two working strokes for each revolution of the crankshaft **20**. In one alternate approach, the reciprocating compressor **1** is driven by the connecting rod **19***g* being connected to a short crankshaft above the main crankshaft **20** to which the ancillary crankshaft (not shown) would be geared by a step-up gear in order to provide more than two working strokes per revolution of the main crankshaft **20**. Alternatively, the compressor system can have multiple stages of compression for either rotary or reciprocating compressors. Whereas, the ancillary compressor **1** and second ancillary compressor **2** of the various embodiments are depicted throughout as a reciprocating compressor or a rotary compressor, it is noted that the invention is not limited by the type of compressor utilized for each; and the depicted compressors may be interchanged, or may be the same, or may be other types of compressors performing the functions described herein.

The engine **100**[1] shown in FIG. **1** is characterized by a more extensive expansion process, a low compression ratio and the capability of producing a combustion charge varying in weight from lighter-than-normal to heavier-than-normal, and capable of providing, selectively, a mean effective cylinder pressure higher than can the conventional arrangement of normal engines but capable of having a lower maximum cylinder pressure in comparison to conventional engines. An engine control module (ECM) (not shown in FIG. **1**) and variable valves **3**, **5** and **6** on conduits, as shown, provide a system for controlling the charge density, pressure, temperature, and the mean and peak pressure within the cylinder which allows greater fuel economy, production of greater torque and power at low RPM, with low polluting emissions for both spark and compression-ignited engines. In alternate embodiments, a variable valve timing system can be used and, with a control system such as an ECM, can control the time of opening and the time of closing of the intake valves **16** and **16**' to further provide an improved management of conditions in the combustion chambers of cylinders **7***a*–**7***f* of the engine **100**[1] to allow for a flatter torque curve and higher power, when needed, and with low levels of both fuel consumption and polluting emissions.

Brief Description of Operation of the Engine **100**[1] shown in FIG. **1**

The engine **100**[1] of this invention shown in FIG. **1** is a high efficiency engine that attains both high power and torque with low fuel consumption and low polluting emissions. The new working cycle is an external compression type combustion cycle. In this cycle, part of the intake air (all of which is compressed in the power cylinders in conventional engines) is, selectively, compressed by at least one ancillary compressor **2**. The temperature rise during compression can be suppressed by use of air coolers **10**, **11**, **12** which cool the intake air, and by a shorter compression stroke.

One suggested, preferred method of operation of the new-cycle engine **100**[1] is thus:

1. Depending upon the power requirements of the engine (e.g., differing load requirements), either intake air at atmospheric pressure or intake air that has been compressed by at least one ancillary compressor **2** and has had its temperature and pressure controlled by bypass systems and charge-air coolers, is drawn into the power cylinder **7** by the intake stroke of piston **22**.
2. (a) After the intake stroke is complete, the intake valve **16** (which can be single or multiple, **16**, **16**') is left open for a period of time after the piston **22** has passed bottom dead center, which pumps part of the fresh air charge back into the intake manifold **13**, **14**. The intake valve **16**, **16**' is then closed at a point which action seals the cylinder **7**, thus establishing the compression ratio of the engine.

   (b) Alternatively, the intake valve **16**, **16**' is closed early, during the intake stroke, before the piston **22** has reached bottom dead center. The trapped air charge is then expanded to the full volume of the cylinder **7** and

compression of the charge starts when the piston **22** returns to the point in the compression stroke at which the intake valve **16**, **16'** closed.

3. (a) During the compression stroke of piston **22**, at the point the intake valve **16** closed, either in **2**(*a*) or **2**(*b*) operation, compression begins, producing a small compression ratio. This makes it possible to restrain the temperature rise during the compression stroke.

   (b) During light-load operation, such as in vehicle cruising or light-load power generation, the shutter valve **5** is closed and the air bypass valve (ABV) **6** on the compressor is, preferably opened so that the intake air is returned to the intake conduit **8** of the compressor **2** without being compressed. Shutter valve **3** can then direct the air charge around or through intercoolers **11** and **12**. During this time, the engine pistons **22***a*–**22***f* are drawing in naturally aspirated air through the compressor **2**. This reduces compressor drive work and improves fuel economy.

   (c) When more power is required, the charge density and pressure can be increased by closing air bypass valve (ABV) **6** causing compressor **2** to raise the air pressure and, alternatively, this can be accomplished by either cutting in a second stage of compression by compressor **1**, as shown in FIG. **2**, or by increasing the speed of compressor **2**. At the same time, control valves **5** and **3** preferably, direct some or all of the air charge through one or more of intercoolers **10**, **11**, and **12** in order to increase charge-air density.

4. Compression continues, fuel is added, if not already present, the charge is ignited and combustion produces a large expansion of the gases against the piston **22** producing great energy in either mode **3**(*a*), (*b*) or (*c*). This energy produces a high mean effective cylinder pressure and is converted into high torque and power, especially in mode (c).

Detailed Description of Operation of the Engine **100**[1] of FIG. **1**

During the intake (1st) stroke of the piston **22** air flows through air conduits **15** from a manifold of air **13** or **14**, which air (depending on power requirements) is either at atmospheric pressure or has been compressed to a higher pressure by compressor **2**, through the intake valve **16** into the cylinder **7**. During the intake stroke of piston **22** the intake valve **16** closes early (at point x). From this point, the cylinder **7** contents are expanded to the maximum volume of the cylinder. Then, during the compression (2nd) stroke, no compression takes place until the piston **22** has returned to the point x where the intake valve **16** was closed during the intake stroke. (At point x, the remaining displaced volume of the cylinder is divided by the volume of the combustion chamber, to establish the compression ratio of the engine.) Alternatively, during the intake (1st) stroke of piston **22**, the intake valve **16** is held open through the intake stroke and past bottom dead center piston position, and through part of the compression (2nd) stroke for a significant distance, 10% or, to perhaps 50% or more of the compression stroke, thus pumping some of the charge-air back into intake manifold **13** or **14**, and the intake valve **16** then closes to establish a low compression ratio in the cylinders of the engine. At the time of closure of intake valve **16**, the density, temperature and pressure of the cylinder will be at approximate parity with the manifold **13** or **14** contents.

During light-load operation, such as in vehicle cruising or light-load power generation, the shutter valves **5** and **3** are closed and the air bypass valve (ABV) **6** on the compressor is, preferably, opened so that the intake air is returned to the intake conduit **8** of the compressor **2** without being compressed. During this time the engine pistons **22***a*–**22***f* are drawing in naturally aspirated air through the compressor **2**. This reduces compressor drive work and improves fuel economy.

When medium torque and power is needed, such as highway driving or medium electric power generation, preferably the shutter valve **5** to compressor **2** is closed and the air bypass valve (ABV) **6** is closed also. This causes the atmospheric pressure intake air to cease re-circulating through the compressor **2** and the compressor **2** begins to compress the charge-air to a higher-than-atmospheric pressure, while the closed shutter valves **5** and **3** direct the charge-air through conduits **104**, **110**, **111**, and **121**/**122** bypassing the air coolers **10**, **11** and **12**, with the charge-air going directly to the manifolds **13** and **14** to power cylinders **7***a*–**7***f* where the denser, but hot, charge increases the mean effective cylinder pressure of the engine to create greater torque.

When more power is needed, such as when rapid acceleration is needed or for heavy-load electric power generation, preferably the air bypass valve (ABV) **6** is closed and the shutter valves **3** or **5** or both are opened. This causes the compressor **2** to compress all of the air charge. Shutter valves **3** or **5** or both then supply (depending on the respective opened/closed conditions of valves **3** and **5**), the conditioned air charge through conduits **105** or **104**, to conduit **1** **10**, and then through conduits **111** or **112** to the manifolds, **13**, **14** and to the cylinders **7***a*–**7***f* via one, two, or all three of the charge coolers **10**, **11** and **12**. The very dense cooled air charge when mixed with fuel and ignited and expanded beyond the compression ratio of the engine produces great torque and power.

When greater power is needed the charge-air density and weight can be increased by increasing the speed of the compressor **2** or by cutting in a second compressor as in FIG. **2**, for a second stage of pre-compression. The latter can be done by the engine control module **27** signaling air bypass valve (ABV) **6**, FIG. **2**, to close to prevent re-circulation of part of the intake air into conduit **103** which negates, selectively, any second compression stage during light-load operation. At the time air density and pressure is increased, shutter valves **3** and **5** can direct part of all of the air charge through intercoolers **10**, **11** and **12** in order to condense the charge and lessen the increase in the charge temperature and pressure, both accomplished by the cooling of the charge. This increases the mean effective cylinder pressure during combustion for high torque and power.

The heavier the weight of the air charge and the denser the charge, the earlier in the intake stroke (or the later in the compression stroke) the intake valve can be closed to establish a low compression ratio and retain power, and the less heat and pressure is developed during compression in the cylinder. In this 4-stroke engine the intake charge can be boosted in pressure by as much as 4–5 atmospheres and if the compression ratio is low enough, say 4:1 to 8:1 (higher for diesel fuel), even spark-ignited there would be no problem with detonation. The expansion ratio should still be large, 14:1 would be a preferred expansion ratio for spark ignition, perhaps 19:1 for diesel operation.

The compression ratio is established by the displaced volume of the cylinder **7** remaining after point x has been reached in the compression stroke (and intake valve **16** is closed) being divided by the volume of the combustion

chamber. The expansion ratio in all cases is greater than the compression ratio. The expansion ratio is established by dividing the total displaced volume of the cylinder by the volume of the combustion chamber.

Fuel can be carbureted, or it can be injected in a throttle-body **56** (seen in FIG. **16**), or the fuel can be injected into the inlet stream of air, injected into a pre-combustion chamber (FIG. **21**) or, injected through the intake valve **16**, or it may be injected directly into the combustion chamber. If injected, it should be at or after the piston **22** has reached point x and the intake valve is closed. The fuel can also be injected later, similar to diesel operation, and can be injected at the usual point for diesel oil injection, perhaps into a pre-combustion chamber or directly into the combustion chamber or directly onto a glow plug. Some fuel can be injected after top dead center even continuously during the first part of the expansion stroke for a mostly constant pressure combustion process.

Ignition can be by compression (which may be assisted by a glow plug), or by electric spark. Spark ignition can take place before top dead center, as normally done, at top dead center or after top dead center.

At an opportune time the air-fuel charge is ignited and the gases expand against the piston for the power (3rd) stroke. Near bottom dead center at the opportune time exhaust valve(s) **17** open and piston **22** rises in the scavenging (4th) stroke, efficiently scavenging the cylinder by positive displacement, after which exhaust valve(s) **17** closes.

This completes one cycle of the 4-stroke engine.

The Engine **100**^{2} of FIG. **2**

Referring now to FIG. **2**, there is shown a six cylinder reciprocating internal combustion engine **1002** in which all of the cylinders **7***a*–**7***f* (only two **7***a*, **7***f* of which are shown in a schematic drawing) and associated pistons **22***a*–**22***f* operate in a 4-stroke cycle and all power cylinders are used for producing power to a common crankshaft **20** via connecting rods **19***a*–**19***f*, respectively. An ancillary compressor **2** (herein depicted as a rotary compressor) supplies air which has been compressed, or allows delivery of air therethrough at atmospheric pressure, to manifolds **13** and **14** and to cylinders **7***a*–**7***f* which cylinders operate in a 4-stroke cycle. A second ancillary compressor **1** is used, selectively, to boost the air pressure to compressor **2**. Valves **3**, **4**, **5** and **6** and intercoolers **10**, **11** and **12** are used, in the preferred embodiments, to control air charge density, weight, temperature and pressure. The intake valves **16***a*–**16***f* are timed to control the compression ratio of the engine **100**^{2}. The combustion chambers are sized to establish the expansion ratio of the engine.

The engine **100**^{2} shown in FIG. **2** is characterized by a more extensive expansion process, a low compression ratio and the capability of producing a combustion charge varying in weight from lighter-than-normal to heavier-than-normal, and capable of selectively providing a mean effective cylinder pressure higher than can the conventional arrangement of normal engines but having similar or lower maximum cylinder pressure in comparison to conventional engines. An engine control module (ECM) **27** and variable valves **3**, **4**, **5** and **6** on conduits, as shown, provide a system for controlling the charge density, pressure, temperature, and the mean and peak pressure within the cylinder which allows greater fuel economy, production of greater torque and power at low RPM, with low polluting emissions for both spark and compression-ignited engines. In alternate embodiments, a variable valve timing system can be used and, with a control system such as an engine control module (ECM) **27**, can control the time of opening, and the time of closing of the intake valves **16** to further provide an improved management of conditions in the combustion chambers of cylinders **7***a*–**7***f* of the engine **100**^{2} to allow for a flatter torque curve and higher power, and with low levels of both fuel consumption and polluting emissions.

Brief Description of Operation of the Engine **100**^{2} of FIG. **2**

The engine **100**^{2} of this invention shown in FIG. **2** is a high efficiency engine that attains both high power and torque with low fuel consumption and low polluting emissions. The new working cycle is an external compression type combustion cycle. In this cycle, part of the intake air (all of which is compressed in the power cylinders in conventional engines) is compressed, selectively, by at least one ancillary compressor **1**, **2**. The temperature rise during compression can be suppressed by use of air coolers **10**, **11**, **12**, which cool the intake air, and by a shorter compression stroke.

One suggested, preferred method of operation of the new-cycle engine **100**^{2} is thus:

1. Depending upon the power requirements of the engine (e.g., differing load requirements), either intake air at atmospheric pressure or intake air that has been compressed by at least one ancillary compressor and has had its temperature and pressure adjusted by bypass systems and charge-air coolers, is drawn into the power cylinder **7** by the intake stroke of piston **22**.
2. (a) After the intake stroke is complete, the intake valve **16** (which can be single or multiple) is left open for a period of time after the piston **22** has passed bottom dead center which pumps part of the fresh air charge back into the intake manifold **13**, **14**. The intake valve **16** is then closed at a point which action seals cylinder **7**, thus establising the compression ratio of the engine.
   (b) Alternatively, the intake valve **16** is closed early, during the intake stroke, before the piston **22** has reached bottom dead center. The trapped air charge is then expanded to the full volume of the cylinder **7** and compression of the charge starts when the piston **22** reaches the point in the compression stroke at which the intake valve **16** closed.
3. (a) During the compression stroke of piston **22**, at the point the intake valve **16** closed, either in 2(a) or 2(b) operation, compression begins, producing a small compression ratio. This makes it possible to lessen the temperature rise during the compression stroke.
   (b) During light-load operation, such as in vehicle cruising or light-load power generation, the shutter valves **3** and **5** are closed and the air bypass valves (ABV) **4** and **6** to both compressors **1** and **2** are, preferably, opened so that the intake air is returned to the intake conduits **110** and **103** of the compressors **2** and **1** without being compressed. During this time, the engine pistons **22***a*–**22***f* are drawing in naturally aspirated air past the compressor(s). This reduces compressor drive work and further improves fuel economy.
   (c) When greater power is required, the charge density and pressure can be increased by closing air bypass valve (ABV) **4** causing compressor **2** to raise the charge-air pressure and, in addition, by either cutting in the second stage of compression by compressor **1** in the same manner, that of closing air bypass valve ABV **6**, or by increasing the speed of compressor **2** or of both com-

pressors. At the same time, shutter valves **3** and **5** would be opened to direct some or all of the air charge through intercoolers **10**, **11** and **12** in order to increase charge-air density.

4. Compression continues, fuel is added if not already present, the charge is ignited and combustion produces a large expansion of the gases against piston **22** producing great energy in either mode 3(a), (b) or (c). This energy produces a high mean effective cylinder pressure and is converted into high torque and power, especially in mode (c).

Detailed Description of Operation of the Engine 100^2 of FIG. 2

During the intake (1st) stroke of the piston **22** air flows through air conduits **15** from the manifold **13** or **14** of air which air (depending on power requirements) is either at atmospheric pressure or has been compressed to a higher pressure by compressor **2** and/or compressor **1**, through the intake valve **16** into the cylinder **7**. During the intake stroke of piston **22** the intake valve **16** closes at point x sealing cylinder **7**. From this point the air charge is expanded to the maximum volume of the cylinder. Then during the compression (2nd) stroke, no compression takes place until the piston **22** has returned to the point x where the intake valve **16** was closed during the intake stroke. (At point x, the remaining displaced volume of the cylinder is divided by the volume of the combustion chamber, to establish the compression ratio of the engine.) Alternatively, during the intake (1st) stroke of piston **22**, the intake valve **16** is held open through the intake stroke and passed bottom dead center, and through part of the compression (2nd) stroke for a significant distance, 10% or, to perhaps 50% or more of the compression stroke, thus pumping some of the charge-air back into intake manifold **13** or **14**, and the intake valve **16** then closes, sealing cylinder **7**, to establish a low compression ratio in the cylinders of the engine. At the time of closure of intake valve **16**, the density, temperature and pressure of the cylinder **7** contents will be approximately the same as that of the air charge in the intake manifolds **13** and **14**.

During light-load operation, such as in vehicle cruising or light-load power generation, the shutter valves **3** and **5** are closed and the air bypass valves (ABV) **4** and **6** to both compressors **1** and **2** are, preferably opened so that the intake air is returned to the intake conduits **110** and **103** of the compressors **2** and **1** without being compressed. During this time the engine pistons **22***a*–**22***f* are drawing in naturally aspirated air past the compressor(s). This reduces compressor drive work and further improves fuel economy.

When medium torque and power is needed, such as highway driving or medium electric power generation, preferably the shutter valves **3** and **5** are closed and the air bypass valves (ABV) **4** and **6** are closed. This causes the atmospheric pressure intake air to cease re-circulating through the compressor **2** and **1** and both compressors begin to compress the charge-air to a higher-than-atmospheric pressure, while the closed shutter valves **3** and **5** direct the charge-air through conduits **104**, **110**, **111**, and **121**/**122** bypassing the air coolers **10**, **11** and **12**, in FIG. **2**, with the charge-air going directly to the manifold **13** and **14** and to power cylinders **7***a*–**7***f* where the denser, but hot, charge increases the mean effective cylinder pressure of the engine to create greater torque and power.

When more power is needed, such as when rapid acceleration is needed or for heavy-load electric power generation, preferably the air bypass valve (ABV) **4** is closed and the shutter valve **3** is opened. This causes the compressor **2** to compress all of the air charge and shutter valve **3** directs the air charge through conduits **112** and **113** and the compressed charge-air is supplied to the manifolds **13** and **14** and to the cylinders **7***a*–**7***f* via the charge coolers **11** and **12**. For even greater power the shutter valve **5** is opened and the air bypass valve **6** is closed and compressor **1** begins a second stage of compression, and all of the air charge is now directed through intercoolers **10**, **11** and **12** for high charge density. The very dense cooled air charge when mixed with fuel and ignited and expanded beyond the compression ratio of the engine produces great torque and power.

The heavier the weight of the air charge and the denser the charge, the earlier (or later) the intake valve can be closed to establish a low compression ratio and retain power, and the less heat and pressure is developed during compression in the cylinder. In this 4-stroke engine the intake charge can be boosted in pressure by as much as 4–5 atmospheres and if the engine's compression ratio is low enough, say 4:1 to 8:1 (higher for diesel fuel), even spark-ignited there would be no problem with detonation. The expansion ratio would still be very large, 14:1 would be a preferable expansion ratio for spark ignition, perhaps 19:1 for diesel operation.

The compression ratio is established by the displaced volume of the cylinder **7** remaining after point x has been reached in the compression stroke (and intake valve **16** is closed) being divided by the volume of the combustion chamber. The expansion ratio in all cases is greater than the compression ratio. The expansion ratio is established by dividing the total displaced volume of the cylinder by the volume of the combustion chamber.

Fuel can be carbureted, or it can be injected in a throttle-body **56** (seen in FIG. **16**), or the fuel can be injected into the inlet stream of air, injected into a pre-combustion chamber as in FIG. **21** or, injected through the intake valve **16**, or it may be injected directly into the combustion chamber. If injected, it should be at or after the piston **22** has reached point x and the intake valve is closed. The fuel can also be injected later and in the case of diesel operation can be injected at the usual point for diesel oil injection, perhaps into a pre-combustion chamber or directly into the combustion chamber or directly onto a glow plug.

At an opportune time the air-fuel charge is ignited and the gases expand against the piston for the power (3rd) stroke. Near bottom dead center at the opportune time exhaust valve(s) **17** open and piston **22** rises in the scavenging (4th) stroke, efficiently scavenging the cylinder by positive displacement, after which the exhaust valve(s) closes.

This completes one cycle of the 4-stroke engine.

The Engine 100^3 of FIG. 3

Referring now to FIG. **3**, there is shown a six cylinder reciprocating internal combustion engine 100^3 in which all of the cylinders **7***a*–**7***f* (only one of which is shown in a sectional view) and associated pistons **22***a*–**22***f* operate in a 4-stroke cycle and all power cylinders are used for producing power to a common crankshaft **20** via connecting rods **19***a*–**19***f*, respectively. An ancillary reciprocating compressor **1** and an ancillary rotary compressor **2** supply pressurized charge air which has been compressed, or allow deliver of air therethrough at atmospheric pressure, to manifolds **13**, **14** and to cylinders **7***a*–**7***f*, which cylinders operate in a 4-stroke cycle. Valves **3**, **4**, **5** and **6** and intercoolers **10**, **11** and **12** are used, in the preferred embodiments, to control air charge density, weight, temperature and pressure. The intake

valves **16** are timed to control the compression ratio of the engine **100**^{3}. The combustion chambers are sized to establish the expansion ratio of the engine.

The engine **100**^{3} shown in FIG. **3** is characterized by a more extensive expansion process, a low compression ratio and the capability of producing a combustion charge varying in weight from lighter-than-normal to heavier-thannormal, and capable of selectively providing a mean effective cylinder pressure higher than can the conventional arrangement of normal engines but having similar or lower maximum cylinder pressure in comparison to conventional engines. An engine control module (ECM) **27** and variable valves **3**, **4**, **5** and **6** on conduits, as shown, provide a system for controlling the charge density, pressure, temperature, and the mean and peak pressure within the power cylinder **7** which allows greater fuel economy, torque and power at low RPM, with low polluting emissions for both spark and compression-ignited engines. In alternate embodiments, a variable valve timing system can be used and, with a control system such as an engine control module (ECM) **27**, can control the time of opening and the time of closing of the intake valves **16** to further provide an improved management of conditions in the combustion chambers of cylinders **7***a*–**7***f* of the engine **100**^{3} to allow for a flatter torque curve and high power and with low levels of both fuel consumption and polluting emissions.

Brief Description of Operation of the Engine **100**^{3} of FIG. **3**

The engine **100**^{3} of this invention shown in FIG. **3** is a high efficiency engine that attains both high power and torque with low fuel consumption and low polluting emissions. The new working cycle is an external compression type combustion cycle. In this cycle part of the intake air (all of which is compressed in the power cylinders in conventional engines) is selectively compressed by at least one ancillary compressor **1**, **2**. The temperature rise during compression can be suppressed by use of air coolers **10**, **11**, **12**, which cool the intake air, and by a shorter compression stroke.

One suggested, preferred method of operation of the new-cycle engine **100**^{3} is thus:

1. Depending upon the power requirements of the engine (e.g., differing load requirements), either intake air at atmospheric pressure or intake air that has been compressed by at least one ancillary compressor and has had its temperature and pressure adjusted by bypass systems and charge-air coolers, is drawn into the power cylinder **7** by the intake stroke of piston **22**.
2. (a) After the intake stroke is complete the intake valve **16** (which can be single or multiple, **16**, **16**') is left open for a period of time after the piston **22** has passed bottom dead center which pumps part of the fresh air charge back into the intake manifolds **13**, **14**. The intake valve **16** is then closed at a point which seals cylinder **7**, thus establishing the compression ratio of the engine.

   (b) Alternatively, the intake valve **16** is closed early, during the intake stroke, before the piston **22** has reached bottom dead center. The trapped air charge is then expanded to the full volume of the cylinder **7** and compression of the charge starts when the piston **22** reaches the point in the compression stroke at which the intake valve **16** closed.
3. (a) During the compression stroke of piston **22**, at the point the intake valve **16** closed, either in 2(a) or 2(b) operation, compression begins, producing a small compression ratio. This makes it possible to lessen the temperature rise during the compression stroke.

   (b) During light-load operation, such as in vehicle cruising or light-load power generation, the shutter valves **3** and **5** are closed and the air bypass valves (ABV) **4** and **6** on both compressors **1** and **2** are, preferably, opened so that the intake air is returned to the intake conduits **110** and **8** of the compressors **1** and **2** without being compressed. During this time the by engine pistons **22***a*–**22***f* are drawing in naturally aspirated air past the compressor(s). This reduces compressor drive work and further improves fuel economy.

   (c) When greater power is required, the charge density and pressure can be increased by closing air bypass valve (ABV) **4** causing compressor **1** to raise the charge-air pressure and, in addition, by either cutting in the second stage of compression by compressor **2**, if needed, in the same manner, that of closing ABV valve **6**, or by increasing the speed of compressors **1** or **2**, or both. At the same time, shutter valves **3** and **5** would direct some or all of the air charge through intercoolers **10**, **11**, and **12** in order to increase charge-air density.
4. Compression continues, fuel is added if not already present, the charge is ignited and combustion produces a large expansion of the gases against piston **22** producing great energy in either mode 3(a), (b) or (c). This energy produces a high mean effective cylinder pressure and is converted into high torque and power, especially in mode (c).

Detailed Description of Operation of the Engine **100**^{3} of FIG. **3**

During the intake (1st) stroke of the piston **22** air flows through air conduits **15** from the manifold **13** or **14** of air which air (depending on power requirements) is either at atmospheric pressure or has been compressed to a higher pressure by compressor **1** or **2** through the intake valve **16** into the cylinder **7**. During the intake stroke of piston **22** the intake valve **16** closes (at point x). From this point the cylinder contents are expanded to the maximum volume of the cylinder. Then during the compression (2nd) stroke, no compression takes place until the piston **22** has returned to the point x where the intake valve **16** was closed, sealing the cylinder **7**, during the intake stroke. (At point x, the remaining displaced volume of the cylinder is divided by the volume of the combustion chamber, to establish the compression ratio of the engine.) Alternatively, during the intake (1st) stroke of piston **22**, the intake valve **16** can be held open through the intake stroke passed bottom dead center, and through part of the compression (2nd) stroke for a significant distance, 10% to perhaps 50% or more of the compression stroke pumping some of the charge-air back into intake manifold, and the intake valve **16**, **16**' then closes to establish a low compression ratio in the cylinders of the engine.

During light-load operation, such as in vehicle cruising or light-load power generation, the shutter valves **3** and **5** are closed and the air bypass valves (ABV) **4** and **6** on both compressors **1** and **2** are, preferably, opened so that the intake air is returned to the intake conduits **110** and **8** of the compressors **1** and **2** without being compressed. During this time the engine pistons **22***a*–**22***f* are drawing in naturally aspirated air past the compressor(s). This reduces compressor drive work and further improves fuel economy.

When medium torque and power is needed, such as highway driving or medium electric power generation, pref-

erably the shutter valve **3** to compressor **1** is opened, the air bypass valve (ABV) **4** is closed and ABV **6** remains open. This causes the atmospheric pressure intake air to cease re-circulating through the compressor **1**; and the compressor **1**, alone, begins to compress the charge-air to a higher-than-atmospheric pressure, while the closed shutter valves **3** and **5** directs the charge-air through conduits **104**, **110**, **111**, and **121**/**122** bypassing the air coolers **10**, **11** and **12**, in FIG. **3**, with the charge-air going directly to the manifolds **13** and **14** and to power cylinders **7***a*–**7***f* where the denser heated charge increases the mean effective cylinder pressure of the engine to create greater torque and power.

When more power is needed, such as when rapid acceleration is needed or for heavy-load electric power generation, preferably the air bypass valves (ABV) **4** and **6** are closed and the shutter valves **3** and **5** are opened on both compressors. This causes the compressors **1** and **2** to compress all of the air charge and shutter valves **3** and **5** direct the air charge away from conduit **8** and through the compressors **1** and **2**, and the compressed charge-air is then supplied through conduits **105**, **106**, **110**, **112**, **113**, **114** and **115** to the manifolds **13** and **14** and to the cylinders **7***a*–**7***f* via the charge coolers **10**, **11** and **12**. The very dense cooled air charge when mixed with fuel and ignited and expanded beyond the compression ratio of the engine produces great torque and power.

The heavier the weight of the air charge and the denser the charge, the earlier in the intake stroke (or the later in the compression stroke) the intake valve can be closed to establish a low compression ratio and retain power, and the less heat and pressure is developed during compression in the cylinder. In this 4-stroke engine the intake charge can be boosted in pressure by as much as 4–5 atmospheres and if the compression ratio is low enough, say 4:1 to 8:1 (higher for diesel fuel), even spark-ignited there would be no problem with detonation. The expansion ratio would still be very large, 14:1 would be a preferred expansion ratio for spark ignition, perhaps 19:1 for diesel operation.

The compression ratio is established by the displaced volume of the cylinder **7** remaining after point x has been reached in the compression stroke (and intake valve **16** is closed) being divided by the volume of the combustion chamber. The expansion in all cases is greater than the compression ratio. The expansion ratio is established by dividing the total displaced volume of the cylinder by the volume of the combustion chamber.

Fuel can be carbureted, or it can be injected in a throttle-body, or the fuel can be injected into the inlet stream of air, injected into a pre-combustion chamber, FIG. **21**, or, injected through the intake valve **16**, or it may be injected directly into the combustion chamber. If injected, it should be at or after the piston **22** has reached point x and the intake valve is closed. The fuel can also be injected later and in the case of diesel operation can be injected at the usual point for diesel oil injection, perhaps into a pre-combustion chamber or directly into the combustion chamber or directly onto a glow plug.

At an opportune time the air-fuel charge is ignited and the gases expand the piston **22** for the power (3rd) stroke. Near bottom dead center at the opportune time exhaust valve(s) **17** open and piston **22** rises in the scavenging (4th) stroke, efficiently scavenging the cylinder by positive displacement, after which exhaust valve(s) **17** closes.

This completes one cycle of the 4-stroke engine.

The Engine **100**^{4} of FIG. **4**

Referring now to FIG. **4**, there is shown a six cylinder reciprocating internal combustion engine **100**^{4} having two atmospheric air intakes **8** and **9** and corresponding intake conduits **15**-A, **15**-B, in which all of the cylinders (only one (**7**) of which is shown in a sectional view) **7***a*–**7***f* and associated pistons **22***a*–**22***f* operate in a 4-stroke cycle and all power cylinders are used for producing power to a common crankshaft **20** via connecting rods **19***a*–**19***f*, respectively. A compressor **2**, in this figure a Lysholm type rotary compressor, is shown which, with air conduits as shown, supplies pressurized air to one or more cylinder intake valves **16**-A. An air inlet **8** and an ancillary air inlet **9** and inlet conduits **15**-A, **15**-B selectably supply air charge at atmospheric pressure or air which has been compressed to a higher pressure to separate intake valves **16**-A and **16**-B opening to the same cylinder **7***a*–**7***f* (for example, shown here opening to cylinder **7***f*). Intercoolers **10**, **11** and **12** and control valves **3**, **5** and **6** are used, in the preferred embodiments, to control the air charge density, weight, temperature and pressure. The intake valves **16***a*-B–**16***f*-B which receive air through manifold **14**-B and intake conduits **15***a*-B to **15***f*-B, are timed to control the compression ratio of the engine **100**^{4}. The combustion chambers are sized to establish the expansion ratio of the engine. Because of noticeable similarities between the engine **100**^{4} of FIG. **4** and that of FIG. **7** (where the auxiliary air inlet **9** system has been shown in phantom, for informational value), reference will be made as deemed helpful to FIG. **7** for certain common components.

The engine **100**^{4} shown in FIG. **4** is characterized by a more extensive expansion process, a low compression ratio and capable of producing a combustion charge varying in weight from lighter-than-normal to heavier-than-normal and capable of selectively providing a mean effective cylinder pressure higher than can the conventional arrangement in normal engines with similar or lower maximum cylinder pressure in comparison to conventional engines. Engine control module (ECM) **27** (refer, for example to FIG. **7**) and variable valves **3**, **5**, and **6** on conduits, as shown, provide a system for controlling the charge pressure, density, temperature, and mean and peak pressure within the cylinder which allows greater fuel economy, production of greater power and torque at all RPM, with low polluting emissions for both spark and compression ignited engines. In alternate embodiments, a variable valve timing system with the ECM **27** can also control the time of opening and closing of the intake valves **16**-A and/or **16**-B, to further provide an improved management of conditions in the combustion chambers to allow for a flatter torque curve, and higher power, with low levels of both fuel consumption and polluting emissions.

Brief Description of Operation of the Engine **100**^{4} shown in FIG. **4**

The new cycle engine **100**^{4} of FIG. **4** is a high efficiency engine that attains both high power and torque, with low fuel consumption and low polluting emissions. The new cycle is an external compression type combustion cycle. In this cycle, part of the intake air (all of which is compressed in the power cylinders in conventional engines) is selectively compressed by an ancillary compressor **2**. The temperature rise at the end of compression can be suppressed by use of air coolers **10**, **11**, **12**, which cool the intake air, by the late injection of temperature adjusted air, and by a shorter compression stroke.

During operation, a primary air charge is supplied to the cylinder **7** through intake valve **16**-B at atmospheric pressure or air which has been increased by perhaps one-half to one atmosphere through an ancillary air inlet **9** which can be

E-FILED
Thursday, 09 February, 2006 05:27:17 PM
Clerk, U.S. District Court, ILCD

carbureted. This charge can be compressed, fuel added if not present, ignited at the appropriate point near top dead center for the power stroke—providing high fuel economy and low polluting emissions.

When more power is desired, a secondary air charge originating from air inlet **8** is, preferably, introduced into the power cylinder **7** during the compression stroke by a second intake valve **16**-A which introduces a higher pressure air charge after the first intake valve **16**-B has closed in order to increase the charge density when needed. After the secondary air charge has been injected, intake valve **16**-A quickly closes. The primary air charge may be boosted to a higher pressure by cutting in a second ancillary compressor, in series with compressor **2**, (see for example, compressor **1** in FIG. **7**, where the primary compressor to be used in the engine of FIG. **4** is the compressor **2**—shown in FIG. **4** and FIG. **7**, for example, as a Lysholm rotary type) between air inlet **8** and manifold **13**, **14**, and can be intercooled. The temperature, pressure, amount and point of injection of the secondary charge, if added, is adjusted to produce the desired results. An intake valve disabler (there are several on the market, for example, Eaton Corp. and Cadillac), in preferred embodiments, may be used to disable intake valve **16**-A when light-load operation does not require a high mean effective cylinder pressure. Alternatively, the air bypass valve (ABV) **6** is opened to re-circulate the charge-air back through the compressor **2** in order to relieve the compressor of compression work during light-load operation.

Alternatively, a one-way valve, one type of which is shown as **26** in FIG. **6** can be utilized to provide a constant or a variable "pressure ratio" in the cylinder **7**, while improving swirl turbulence. In this alternate method of operation the intake valve **16**-A would close very late and valve **26** would close only when the pressure in the cylinder **7** nearly equates or exceeds the pressure in conduit **15**-A. Thus, the pressure in conduit **15**-A, controlled by compressor speed, along with valves **3**, **5** and **6** (and valve **4** in FIG. **7**) would regulate the pressure, density, temperature and turbulence of the combustion process. A spring-retracted disc type, metal or ceramic, or any other type of automatic valve could replace valve **26**.

Another alternate method of providing a low compression ratio, with a large expansion ratio and reduced polluting emissions is thus:

The air pressure supplied to intake runner-conduit **15**-A is produced at an extremely high level, and intake valve **16**-A is, in alternate embodiments, replaced by a fast-acting, more controllable valve such as but not limited to a high speed solenoid valve (not shown), which valve is, preferably, either mechanically, electrically or vacuum operated under the control of an engine control module (ECM). In such an embodiment, a smaller, denser, temperature-adjusted, high-pressure charge, with or without accompanying fuel, can, selectively, be injected, tangentially oriented, much later in the compression stroke, or even during the combustion process, in order to increase charge density, to reduce peak and overall combustion temperatures, and to create the desired charge swirl turbulence in the combustion chamber (s).

One suggested, preferred method of operation of the new-cycle engine **100**^{4} is thus:

1. Depending upon the power requirements of the engine (e.g., differing load requirements), either intake air at atmospheric pressure or intake air that has been compressed by one compressor (not shown) and has had its temperature adjusted by bypass systems and charge-air coolers (not shown) is drawn into the cylinder **7** (intake stroke) through air inlet **9**, manifold **14**-B, intake conduits **15**-B, and intake valves **16***a*-B-**16***f*-B by intake stroke of piston **22**.
2. (a) After the intake stroke is complete the intake valve **16**-B (which can be single or multiple), is left open for a period of time after the piston **22** has passed bottom dead center, which pumps part of the fresh air charge back into the intake manifold **14**-B.

   (b) Alternatively, the intake valve **16**-B is closed early, during the intake stroke before the piston reaches bottom dead center. The trapped air charge is then expanded to the full volume of the cylinder **7**.
3. (a) The compression (2nd) stroke now begins and, at the point the intake valve **16**-B is closed to seal cylinder **7** in either **2**(a) or **2**(b) operation, compression begins (for a small compression ratio). This makes it possible to lessen the temperature rise during the compression stroke.

   (b) When greater power is required a secondary compressed, temperature-adjusted air charge is injected into the cylinder **7** by intake valve **16**-A which opens and closes quickly during the compression stroke at the point at which the intake valve **16**-B which introduced the primary air charge closes, or later in the stroke, to produce a more dense, temperature controlled charge in order to provide the torque and power desired of the engine.

   (c) Alternatively, when greater power is required, the secondary air charge can be increased in density and weight by causing shutter valves **5** and **3** to direct all or part of the air charge through one or more of intercoolers **10**, **11** and **12** to increase the charge density and/or by increasing compressor speed or by cutting in a second stage of auxiliary compression, the latter two actions thereby pumping in more air on the backside. Alternatively, the timing of the closing of intake valve **16**-B on either the inlet or compression stroke can be altered temporarily to retain a larger charge, and at the same time the timing of intake valve **16**-A can be temporarily altered to open and close earlier during the compression stroke to provide a larger dense, temperature-adjusted air charge.
4. Compression continues, fuel is added if not present, the charge is ignited and combustion produces a large expansion of the combusted gases against the piston **22** producing great energy in either mode 3(a), (b), or (c). This energy is absorbed and turned into high torque and power, especially in mode (c).
5. Near bottom dead center of the piston, exhaust valves **17***a*–**17***f*, **17***a*'–**17***f* open and the cylinder **7** is efficiently scavenged by the (4th) stroke of piston **22**, after which valve(s) **17** close.

Detailed Description of the Operation of the Engine **100**^{4} of FIG. **4**

During the intake (1st) stroke of the piston **22** low pressure air flows through air conduit **15**-B from the atmospheric air inlet **9** through manifold **14**-B of air at atmospheric pressure or which has been boosted in pressure (or, alternatively, the low pressure air can be supplied by a pressure regulator valve **25** and conduit **15**-B from compressed air line **15**-A as shown in FIG. **5**), through an intake valve **16**-B into the cylinder **7**. During the intake stroke of piston **22**, the intake valve **16**-B closes (point x). From this point the air charge in the cylinder is expanded to the maximum volume of the cylinder. Then, during the compression (2nd) stroke, no compression of the charge takes

place until the piston **22** returns to point x where the inlet valve was closed. (At point x, the remaining displaced volume of the cylinder is divided by the volume of the combustion chamber, establishing the compression ratio of the engine.) At any point in the compression stroke of piston **22** at the time or after the piston **22** reaches point x a second inlet valve **16**-A is, selectively, opened in order to inject a secondary pressurized air charge at a temperature, density and pressure deemed advantageous to the engine load, torque demand, fuel economy and emissions characteristics desired. Alternatively, during the intake of charge-air by intake valve **16**-B, the intake valve **16**-B is held open past bottom dead center for a significant distance, 10% to perhaps 50% or more of the compression stroke, thus pumping some of the charge back into the intake manifold **14**-B, and then closed to establish a low compression ratio in the cylinder. During the compression stroke, at or after the time intake valve **16**-B is closed, a secondary charge of high pressure, temperature-adjusted air which has been compressed by compressor **2** is, selectively, injected by a second intake valve **16**-A, which opens and closes quickly, into the same cylinder **7**. Alternatively, when greater torque and power are needed, the density of the secondary charge-air is greatly increased by increasing the speed of the primary compressor **2** or by cutting in another stage of compression, as in item **1**, FIG. **7**, and/or by routing the air charge through intercoolers.

For light-load operation a shut-off valve, or a valve disabler **31** (such as shown in FIG. **7**) on the high pressure intake valve **16**-A, preferably, temporarily restrains the intake air, or holds the valve closed. This would add to the fuel economy of the engine. Alternatively, during light-load operation the shutter valve **5** is closed and the air bypass valve ABV **6** is opened so that part or all of the air pumped by compressor **2** would be returned to the inlet conduit of the compressor **2** for a low, or no pressure boost. Therefore, when secondary intake valve **16**-A opens, the pressure of the air in conduit **15**-A is approximately the same as, or not much greater than that from the initial charge. In an alternate embodiment, an ancillary automatic valve **26**, FIG. **6**, is arranged, as shown in FIG. **6**, to prevent any back-flow of charge-air into conduit **15**-A if the cylinder pressure should exceed the pressure in conduit **15**-A before intake valve **16**-A closed during the compression stroke of piston **22**.

If an ancillary one-way valve (see valve **26** of FIG. **6**) is present, the pressure ratio in cylinder **7** can be fully controlled by adjusting the pressure of the charge air passing through intake valve **16**-A. The pressure ratio can then be controlled by valves **3**, **5**, **6** and by compressor speed and any throttle valve that may be present. In the use of valve **26**, intake valve **16**-A must be kept open until very late in the compression stroke, perhaps until piston **22** nears or reaches top dead center.

Fuel can be carbureted in FIG. **4**, FIG. **4**-B, FIG. **5**, FIG. **7** and FIG. **33**, injected in a throttle body **56** (seen in FIG. **16**), or the fuel can be injected into the inlet stream of air, injected into a pre-combustion chamber or, injected through intake valves **16**-A, **16**-B, (**16**-B only if **16**-B does not remain open past bottom dead center), or it may be injected directly into the combustion chamber at point x during the intake stroke, (during the intake stroke only if intake valve **16**-B closes before bottom dead center), or at the time or after the piston **22** has reached point x in the compression stroke. The fuel can be injected with or without accompanying air. In the case of diesel operation, fuel can be injected at the usual point for diesel oil injection, perhaps into a pre-combustion chamber or directly into the combustion chamber or directly onto a glow plug.

After the temperature-and-density-adjusting-air charge has been injected, if used, compression of the charge continues and with fuel present, is ignited at the opportune time for the expansion (3rd and power) stroke. (The compression ratio is established by the displaced volume of the cylinder remaining after point x has been reached on the compression stroke, being divided by the volume of the combustion chamber. The expansion ratio is determined by dividing the cylinders total clearance volume by the volume of the combustion chamber.) Now the fuel-air charge is ignited and the power, (3rd) stroke of piston **22** takes place as the combusted gases expand. Near bottom dead center of the power stroke the exhaust valve(s) **17**, **17'** opens and the cylinder **7** is efficiently scavenged on the fourth piston stroke by positive displacement, after which exhaust valve(s) **17** closes.

This completes one cycle of the 4-stroke engine.

It can be seen that the later the point in the compression stroke that point x is reached (the earlier or later the inlet valve is closed), the lower is the compression ratio of the engine and the less the charge is heated during compression. It can also be seen that the later the temperature-density-adjusting charge is introduced, the less work will be required of the engine to compress the charge, the later part of which has received some compression already by an ancillary compressor **2**.

The Engine $100^{4\text{-}B}$ of FIG. **4**-B

Referring now to FIG. **4**-B there is shown a six cylinder 4-stroke internal combustion engine similar in construction to the engine of FIG. **4** with the exception that the engine of FIG. **4**-B is so constructed and arranged that compressor **2** receives charge-air from manifold **14**-B through opening **8**-B (shown in FIG. **7**) and conduit **8** which air enters through common air intake duct **9**. Intake runners **15***a*-C to **15***f*-C distributes the atmospheric pressure air to the intake valves **16**-B of each power cylinder. This arrangement allows the provision of air to intake valves **16**-A and **16**-B at different pressure levels since the charge-air from conduits **15**-A is selectively pressurized by compressor **2**. The operation of the engine of FIG. **4**-B is the same as that of the engine of FIG. **4**.

The Engine 100^{5} of FIG. **5**

Referring now to FIG. **5**, there is shown a six cylinder 4-stroke internal combustion engine 100^{5} similar to the engines 100^{4} of FIG. **4** and engine $100^{4\text{-}B}$ of FIG. **4**-B with the exception that there are shown alternative ways that the dual atmospheric air inlets can be eliminated, preferably by providing the low pressure charge-air to intake valves **16**-B by way of conduits **15***a*-D to **15***f*-D all leading from the common air inlet conduit **8**, or from an optional air manifold **35**-M, situated between inlet conduit **8** and the inlet of conduits **15***a*-D to **15***f*-D, which manifold would also supply air to compressor **2** through conduit **8**-A. Providing the low pressure charge-air to intake valve **16**-B by way of conduit **15**-D, or by conduit **15**-B (shown in phantom) would eliminate a second air filter and air induction system and would work well with either the first system described which involves closing the primary intake valve **16**-B during the intake stroke of the piston **22** or alternatively closing the primary intake valve **16**-B during the 2nd or compression stroke. Alternatively, as shown, the low pressure charge-air can be supplied by placing a pressure-dropping valve **25** in conduit **15**-B routed for leading from the pressurized air conduit **15** (**15**-A) to the low pressure cylinder inlet valve

16-B in order to drop the inducted air pressure down to the level that could be controlled by the system of compression ratio adjustment described herein, preferably down to 1.5 to 2.0 atmospheres (absolute pressure which is a boost of 0.5 to 1.0 atmosphere) and perhaps down to atmospheric pressure.

The operation of the engine 100^5 of FIG. 5 would be the same as the operation of the engine 100^4 of FIG. 4 although the low pressure primary air supply is supplied differently. Because of noticeable similarities between the engine 100^5 of FIG. 5 and that of FIG. 7, reference will be made as deemed helpful to FIG. 7 for certain common components.

During light-load operation of this 4-stroke cycle engine (FIG. 4, FIG. 4-B and FIG. 5) such as vehicle cruising or light-load power generation, the secondary air charge is, alternatively, eliminated by disabling high pressure intake valve 16A temporarily (there are several valve disabling systems available, e.g., Eton, Cadillac, etc.) or air can be shut off to intake valve 16-A and the engine still produce greater fuel economy and power than do conventional engines.

Alternatively and preferably, during light load operation such as vehicle cruising, the compressor 2 can be relieved of any compression work by closing the shutter valve 5 and opening the air bypass valve 6 which circulates the air pumped back into the compressor 2 and then the air in intake conduits 15-A and 15-B or 15-D are approximately equal. Therefore, no supercharging takes place during this time. In one embodiment, automatic valve 26, FIG. 6, prevents backflow of air during the compression stroke if compression pressure in the cylinder approximates or exceeds the pressure in conduit 15-A before the intake valve 16-A closes.

For increased power the secondary air charge may be increased by shutter valves 3 and 5 being preferably opened to direct the air charge to intercoolers 10, 11 and 12, which makes the charge denser and/or by increasing the speed of compressor 2 or by adding a second stage of pre-compression by compressor 1 in FIG. 7, the latter two actions thereby pumping in more air on the backside. There is shown in FIG. 7 that the primary compressor 2 is a Lysholm rotary type and a secondary compressor 1 is a rotary compressor of the turbo type, although any type of compressors can be used in the engines of this invention.

Referring now to FIG. 6 there is shown the same 4-stroke engine and a similar operating system as described for the engines of FIG. 4, FIG. 4-B, FIG. 5, FIG. 7 and FIG. 33, except that the engine of FIG. 6 has an added feature in that the secondary intake valve 16-A has an auxiliary valve 26 which is automatic to prevent charge-air back-flow from cylinder 7. This feature will prevent any back-flow from occurring during the compression stroke of the engine of this invention. This feature can also be used to establish the pressure ratio of the engine, either variable or constant. If secondary charge air is being received through intake valve 16-A, the intake valve 16-A can be kept open during the compression stroke to near top dead center of piston 22, since automatic valve 26 closes at such time the pressure in cylinder 7 approximates the pressure in intake runner conduit 15-A. Therefore, the pressure differential between cylinder 7 and intake runner 15-A will allow closure of automatic valve 26, even though intake valve 16-A may still be open, allowing the pressure ratio of cylinder 7 to be controlled by the pressure of any charge air coming through intake runner 15-A, which in turn is controlled by valves 3, 5, and 6 and compressor speed and perhaps a throttle valve, if present, for engines having a single stage of pre-compression. Valves 3, 4, 5 and 6 and compressor speed and any throttle valve present would control the pressure ratios for engines having two stages of pre-compression. If no charge is passing from intake valve 16-A, automatic valve 26 will be already closed and the pressure ratio is set by the compression ratio of the engine and the density and temperature of the charge received by cylinder 7 through intake valve 16-B. The compression ratio is still set by the point in cylinder 7 that the primary intake valve 16-B is closed. The pressure ratio is set by the density and temperature of the air present in cylinder 7 whether it enters through valve 16-B, 16-A or both, and by the compression ratio.

Any type of automatic valve can be used for item 26, perhaps a spring-retracted disc type which can be made of metal or ceramics.

The Engine 100^1 of FIG. 7

Referring now to FIG. 7, there is shown a schematic drawing of a six cylinder engine 100^7 operating in a 4-stroke cycle. The engine is similar in structure and operation to the 4-stroke engine of FIG. 4, FIG. 4-B and FIG. 5 and shows alternative air induction systems utilizing air intake 9 (in phantom) or air intake 8', or both. FIG. 7 also shows three intercoolers 10, 11 and 12 and dual manifolds 13 and 14 plus alternative intake manifold 14-B. The need for dual atmospheric air intake (8' and 9 in FIG. 7) can be eliminated by providing air from port 8-B of manifold 14-B directly to air intake conduit 8' shown schematically, in FIG. 7.

One alternate air induction system shown in FIG. 7 supplies unpressurized charge-air to intake valve 16-B of the engine of FIG. 4-B and of FIG. 7 by providing atmospheric pressure air to the intake runners 15*a*-C to 15*f*-C leading from manifold 14-B in FIG. 4-B and FIG. 7 which receives atmospheric air through induction port 9, and then distributes the unpressurized air to intake valves 16-B of each power cylinder. Then, high pressure air enters through intake valve 16-A after piston 22 has reached point x during the compression stroke (the point in which intake valve 16-B closes and compression begins). Intake valve 16-A then closes, compression continues, fuel is added if not present and the charge is ignited near top dead center (TDC) and the power (3rd) stroke occurs.

A second alternate air induction system shown in FIG. 7 supplies low pressure intake air as also shown in FIG. 5 of alternatively receiving air from high pressure conduit 15-A through conduit 15-B with the optional pressure reducing valve 25, (shown in phantom in FIG. 5 and FIG. 7). The secondary high pressure air charge is injected by intake valve 16-A at the same time or later that the piston 22 reaches the point at which the intake valve 16-B closes and compression begins. Intake valve 16-A then quickly closes, compression continues, fuel is added if not present and the charge is ignited at the appropriate place for the power (3rd) stroke.

A third alternate and preferred air induction system shown in FIG. 7 supplies the primary air charge to intake valve 16-B as follows: Charge-air which has been pressurized to a low pressure by compressor 1, perhaps from 0.3 Bar to as much as 2 Bar or more, can selectively (and intermittently or continuously) be supplied to low pressure intake valves 16-B of the engine of FIG. 7 by way of conduit 32 leading from conduit 110 to the intake valves (16*a*-B through 16*f*-B) which conduit receives charge-air at atmospheric pressure or which has been pressurized and in any case has had its temperature optimized, all controlled by compressor 1 and intercooler 10 with the charge-air paths being controlled by

valves **5** and **6** with the corresponding conduits. In this case the valve **33** is optional. After cylinder **7** has been charged and the compression ratio established by the closing of intake valve **16**-B during the first or second stroke of piston **22**, the high pressure intake valve **16**-A opens on the compression stroke at the point which valve **16**-B closes, to inject the dense, temperature adjusted air charge and then it closes, as compression continues and near top dead center, fuel being present, the charge is ignited and the power (3rd) stroke occurs. The use of this system also eliminates the need for dual atmosphere air intakes.

A fourth alternate air induction system shown in FIG. **7** supplies the primary charge-air to the low pressure intake valves **16**-B by having charge-air coming selectively from intake system **9**, manifold **14**-B and intake runners **15**-C (shown in phantom) or from conduit **32** which would direct air to power cylinder **7** at whatever level of pressure and temperature was needed at any particular time. With this arrangement, opening valve **33** at such a time that compressor **1** was compressing the charge passing through it would have the effect of increasing the density of the primary charge-air which in this case could also have its temperature as well as it pressure adjusted by compressor **1** and control valves **5** and **6**. A one-way valve **34** would prevent the higher pressure air escaping through conduit **15**-C. When less power was needed compressor **1** could be "waste gated" by opening, partially or completely control valve **6** and closing shutter valve **5**. Alternatively, valve **33** could be closed by the engine control module (ECM) and the primary charge-air would be drawn into cylinder **7** at atmospheric pressure through intake duct **9** (shown in phantom). The piston **22** now begins its second stroke, the intake valve **16**-B now closes, if not closed on the intake stroke, to establish the compression ratio and in all cases the heavy secondary charge enters through valve **16**-A which opens at the time, or after, piston **22** has reached the point where intake valve **16**-B had closed, valve **16**-A then quickly closes, compression continues and the charge is ignited near top dead center and the power (3rd) stroke occurs.

With this fourth alternate air induction system the low pressure intake valve **16**-B can (a) receive charge-air at atmospheric pressure or (b) can receive charge-air which has been compressed and cooled through conduit **32** or conduit **15**-B. The high pressure intake valve **16**-A (which opens at the time, or later, at which compression begins) can receive charge-air which (a) has been compressed and cooled in a single stage by compressor **1** or compressor **2**, (b) has been compressed and cooled in two stages or more to a very high density or (c) which has had its temperature and pressure adjusted by control valves **5** and **6**, all in order to provide better management of combustion characteristics in regard to power, torque and fuel economy requirements and in regard to emissions control. By incorporating an optional one-way valve (see valve **26** shown in FIG. **6**), the engines of FIG. **4**, FIG. **4**-B, FIG. **5** and FIG. **7** could have either a constant or a variable pressure ratio, the charge density, pressure, temperature and turbulence and the time of closing of valve **26** being controlled by valves **3**, **5** and **6** and by compressor speed and by any throttle valve present in engines having one stage of pre-compression, and by the addition of valve **4**, in engines having two stages of pre-compression. In either case the intake valve **16**-A should be held open very late in the compression stroke, perhaps to near top dead center of piston **22**.

One advantage to compressing the charge-air going to the low pressure intake valve **16**-B in addition to highly compressing the secondary air charge is that during much of the duty cycle of such engines the charge density could be dramatically increased while keeping peak pressures and temperatures low, for high mean effective cylinder pressure. This system could provide all power necessary for vehicular travel in hilly country with perhaps the high pressure intake valves **16**-A being deactivated by a valve deactivator indicated by **31** in FIG. **7**, or by compressor **2** and/or compressor **1** being partially or wholly bypassed by control valves **3** and **4** and/or control valves **5** and **6** to vary the pressure and temperature going into manifolds **13** and **14** and then to intake valves **16**-A. For utmost power, the valve deactivators could be turned off or eliminated.

Also shown in FIG. **7** is a suggested engine control system consisting of an engine control module (ECM) **27**, two shutter valves **3** and **5**, two air bypass valves **4** and **6**, the optional pressure reducing valves **25** (**25***a*–**25***f*) on air conduits **15**-B (**15***a*-B–**15***f*-B), and a scheme of controlling the pressure, temperature and density by controlling air bypass valves **4** and **6** and shutter valves **3** and **5**. As illustrated, air bypass valve **4** is closed to allow compressor **2** to fully compress the charge and shutter valve **3** is slightly open allowing part of the air to flow uncooled (hollow arrows) and some of the air cooled (solid arrows) to the manifolds **13** and **14**, all of which could be controlled by the ECM **27** in order to provide an air charge at optimum density, temperature and pressure. The hollow arrow **4**-A in conduit **120** shows how ABV **4** can be partially opened to allow some of the air to bypass and return to compressor **2** in order to finely adjust the pressure of the secondary air charge that is injected to adjust the charge density and temperature. Alternatively, all of the air charge can be directed through the intercoolers **10**, **11** and **12** or through bypass conduits **121** and **122**, to the manifolds **13** and **14**.

For high power with a low compression ratio and low polluting emissions, the air bypass valves (ABV) **4** and **6** are closed and the shutter valves **3** and **5** would be opened so that the compressors **2** and **1** raise the pressure of the air charge which is directed by shutter valves **3** and **5** through the intercoolers for maximum density. During the intake stroke the low pressure intake valve **16**-B opens, piston **22** sucks in low pressure air, the intake valve **16**-B closes before bottom dead center or after bottom dead center during the compression stroke. During the compression stroke, at the point the intake valve **16**-B closed or later, intake valve **16**-A opens to inject the secondary, dense, cooled air charge and then closes. Compression continues for a low compression ratio. Fuel is added, if not present, and the charge is ignited at the appropriate point near top dead center, (ignition can be before, at, or after top dead center) for the power (3rd) stroke with a large expansion ratio with high torque, then exhaust valve(s) **17** open and the scavenging (4th) stroke occurs, after which exhaust valve(s) **17** closes.

In these designs, fuel can be carbureted, throttle body injected, port injected, injected into the cylinder and can be introduced at any point between the air intake and the piston crown. The fuel air mixture can be stratified, or from a stoichiometric to a very lean mixture for spark ignition, to a very rich mixture for diesel operation. The engine power can be controlled by fuel metering alone or the air supply can be properly adjusted to the proper fuel-air ratio by a throttle valve or can be "metered" by control valves **4** and **6** when using two stages of pre-compression and by control valve **4** when using a single stage of pre-compression.

In any of the engines of this invention, the problem common to normal engines of incomplete mixing of fuel, air and residual gas, with consequent variation in conditions at the ignition point is minimized and in some cases eliminated

by the late air charge injection at high velocity. This problem, hereby addressed by the present invention, is extreme in current engines when gaseous fuel is injected directly into the cylinder where the spark may occur in mixtures of varying fuel-air ratios, hence with various rates of flame development.

(Concerning the importance of finding a solution to this particular problem, engine researchers at Massachusetts Institute of Technology state "The elimination of cycle-to-cycle variation in the combustion process would be an important contribution to improved [engine] performance. If all cycles were alike and equal to the average cycle, maximum cylinder pressures would be lower, efficiency would be greater, and most of all, the detonation limit would be higher, thus allowing appreciable increase in efficiency and/or mean effective cylinder pressure with a given fuel.")

The cyclic variation spoken of is minimized and, potentially, eliminated in the engine of each of the embodiments (including two-stroke embodiments and four-stroke embodiments) of the current invention by the significant swirl turbulence produced by the injection of high-pressure air. In addition, in any of the engines of this invention the swirl turbulence can be oriented tangentially to the cylinder wall by shrouding the inlet valve **16**, and especially valve **16**-A, or by the use of a one-way valve (such as valve **26** in FIG. **6** and FIG. **10**). Even engines that receive an air charge during the intake stroke of the piston using a shrouded intake valve have a tendency to reduce unwanted cyclic variation and have a decrease in octane requirement and an increase in knock-limited indicated mean effective (cylinder) pressure (klimep). The engine of the present invention, by injecting the charge-air, especially through a shrouded valve during the compression stroke, creates a much greater swirl turbulence to further eliminate unwanted cycle-to-cycle variation for cleaner, more complete combustion of the fuel.

The intake valve can rotate during operation and still have a flow tangential to the cylinder wall by using a conventional poppet valve and having the side of the valve head which is opposite the desired direction of the air flow being shrouded as it opens by a thickened section of the face of the engine's head forming a crescent shaped collar or projection to direct the air flow in the desired direction while the valve is open.

In the diesel combustion system, the better mixing process of the present invention allows much richer fuel-air ratios for greater smoke-limited power, and smoke and particulates are virtually eliminated to an extremely rich fuel-air ratio.

The swirl turbulence produced by high pressure charge injection during the compression stroke is not dampened by the compression stroke and the later the charge is injected, the smaller the volume of charge required to produce the desired swirl turbulence. In any reciprocating internal combustion engine operating in accordance with the method of the present invention, a very high pressure, temperature-controlled air charge can, selectively, be injected tangentially oriented, very late in the compression stroke, for example, just prior to, during or with fuel injection and, with extremely high pressures, even during the combustion process.

Since the secondary air charge in the engine of FIG. **4** through FIG. **7**, FIG. **9**, FIG. **9**-B and FIG. **15** through FIG. **20** is compressible to an extremely high level of pressure, the intake valve **16**-A is, in alternate embodiments, replaced by a more controllable and fast-acting valve, such as, but not limited to, a high-speed solenoid valve (not shown). This valve is, preferably, operated either mechanically, electrically or by vacuum and is, preferably, controlled by an engine control module (ECM) as illustrated in FIG. **7**, FIG. **9**-B, FIG. **15** through FIG. **20** and FIG. **33**. In this system the secondary air charge can, selectively, be injected very late in the compression stroke of piston **22** in order to increase charge density, and swirl turbulence, and to reduce peak and overall combustion temperatures and to lessen the production of polluting emissions. The injection could be performed in a tangentially oriented fashion. This would greatly increase swirl turbulence and prevent undesirable cyclic variations which are common in normal engines and most troubling in gaseous or diesel fueled engines.

The use of this system should result in lower maximum cylinder pressures and temperatures. Efficiency should be greater and the detonation limit higher, thus allowing an appreciable increase in efficiency and mean effective cylinder pressure with a given fuel. All of the engines of this invention operate with a more complete expansion process as compared to the typical prior art engines, thereby providing further improvements in efficiency and emissions characteristics.

In accordance with the present invention, the 4-stroke engines of the present invention (for example, FIG. **1**, FIG. **2**, FIG. **3**, FIG. **4**, FIG. **4**-B, FIG. **5**, FIG. **7** and FIG. **33**) are designed, as are the 2-stroke engines of the present invention (for example, FIGS. **8**–**11**, **25** and **33**), to use an expansion ratio larger than the compression ratio. In order to accomplish this result, the expansion ratio is set by selecting the appropriate combustion-chamber volume and the compression ratio is reduced below this value by very early or very late closing of the inlet valve.

The Engine 100^8 of FIG. **8**

Referring now to FIG. **8**, there is shown a six cylinder reciprocating internal combustion engine 100^8 for gasoline, diesel, alcohol, natural gas, hydrogen or hybrid dual-fuel operation and having six cylinders *7a*–*7f* (only one, *7f*, is shown in a sectional view) in which the pistons *22a*–*22f* are arranged to reciprocate. Another cylinder is indicated only by the presence of the lower end of the cylinder liner *7a*. A cut-a-way view shows a double-acting compressor cylinder **1**. Pistons *22a*–*22f* are connected to a common crankshaft **20** in a conventional manner by means of connecting rods *19a*–*19f*, respectively. The engine 100^8 of FIG. **8** is adapted to operate in a 2-stroke cycle so as to produce six power strokes per revolution of the crankshaft **20**. To this end compressor **1** takes in an air charge at atmospheric pressure, (or alternatively an air charge which previously had been subjected to compression to a higher pressure via an admission control valve **6** through an intake conduit **102**, leading from compressor **2** by way of bypass control valve **6** and shutter valve **5** and bypass conduit **104** or through the intercooler **10**). During operation of the engine of FIG. **8**, the air charge is compressed within the compressor **1** by its associated piston **131**, and the compressed charge is forced through an outlet into a high-pressure transfer conduit **109** which leads to bypass valve **3** which is constructed and arranged to channel the compressed charge through intercoolers **11** and **12** or through bypass conduit **111** in response to signals from the engine control module (ECM) **27**. This module directs the degree of compression, the amount and the direction of the flow of the compressed charge through the intercooler and/or the bypass conduit into manifolds **13** and **14**. Manifolds **13** and **14** are constructed and arranged to distribute the compressed charge by means of branch intake conduits **15***a*–**15***f* and to inlet valves **16** and **16'**, and to the remaining five power cylinders. Alternatively, an

ancillary compressor **2** receives atmospheric air through inlet opening **8**, pre-compresses the air charge into conduit **101** leading to control valve **5** which in response to signals from ECM **27** will direct the compressed charge through intercooler **10** or bypass conduit **104** to compressor **1**. The ECM **27** can also control valves **4** and **6** to direct part or all of the charge passing through compressors **1** and **2** back through conduits **120** and **103** in order to adjust the amount of compression of compressors **1** and **2** ranging in either or both compressors from full compression to no compression, thus during light-load operation either compressor **1** or compressor **2** could supply the needed compressed air to the cylinders.

The Engine **100**^{8} of FIG. **8** has camshafts **21** which are arranged to be driven at the same speed as the crankshaft in order to supply one working stroke per revolution for the power pistons. The reciprocating compressor can have one or more double-acting cylinders one is pictured **1** and can have more than one stage of compression, and the crankshaft **20** would supply two working strokes per revolution, for one or more compressors, as described hereinafter. The reciprocating compressor could alternatively be driven by a short crankshaft which would be rotated by a step-up gear on the main crankshaft driving a smaller gear on the ancillary crankshaft. The ancillary rotary compressor **2** could be driven by V-pulley operated by a ribbed V-belt and could have a step-up gear between the V-pulley and the compressor drive shaft. The rotary compressor **2** could also have a variable speed drive as in some aircraft engines.

Description of the Operation of the Engine **100**^{8} of FIG. **8**.

Charge-air is induced into the inlet opening **8** of compressor **2**, from there it passes through the compressor **2** where the charge is then inducted into conduit **101** to shutter valve **5** where the charge is directed either through intercooler **10** or through air bypass valve **6** where a portion or all of the charge can be directed back through the compressor **2** where the charge is re-circulated without compression, or valve **6** can direct the air charge into the inlet of compressor **1** where the air charge is pumped out the outlet duct of compressor **1** which leads to shutter valve **3** where the charge is directed either through intercoolers **11** and **12** or through air bypass valve **4** or a portion through both, leading to manifolds **13** and **14** which distribute the charge-air to the intake valves **16** and to the intake valve of each power cylinder **7** of the engine **100**^{8}. (Bypass valve **4** can direct part or all of the air charge to manifolds **13** and **14**, or can recirculate part or all of the air charge through conduit **120** back to conduit **106** and into the inlet of compressor **1**.) The engine control module (ECM) **27** controls valves **3**, **4**, **5**, and **6**, in order to adjust the pressure, temperature and density of the charge that is inducted into the engine's combustion chambers **130**. The same ECM **27** can control a variable-valve-happening control system to adjust the time of opening and closing of the inlet valves **16** and exhaust valves **17** of the power cylinders in relationship to the angle of rotation of crankshaft **20**, in order to adjust the compression ratio and charge density of the engine for optimum performance in regard to power, torque, fuel economy and characteristics of fuel being supplied.

The operation of the power cylinder **7** is in this manner:

Alternate Method **1**

Near the end of the power stroke in cylinder **7**, the exhaust valve(s) **17**, **17'** open and, with the exhaust valve still open, the piston **22** begins the second or exhaust stroke. During the exhaust stroke, perhaps as early as 70° to 60° before top dead center the exhaust valves **17**, **17'** close. At the point the exhaust valves are closed the compression ratio is established, the intake valves **16**, **16'** are opened at that point or later in the compression stroke, the compressed air and/or air-fuel charge is injected into the combustion chamber **130** of the power cylinder **7**, intake valve **16**, **16'** closes at perhaps 60° before top dead center, with the swirl and squish turbulence accompanying the high-pressure air injection, the piston **22** continues towards the end of its stroke thus compressing the charge producing a very low compression ratio, which can be as low as 2:1. If fuel is not already present as a mixture, fuel is injected into the incoming air stream or it is injected into a pre-combustion chamber or directly into the combustion chamber after closure of the intake valve. The fuel can be injected into the midst of the charge swirl for a stratified charge combustion process, or it can be injected onto a glow plug if diesel fuel is to be ignited. The fuel-air mix is ignited by compression or spark, the latter at the opportune time for greatest efficiency and/or power. Generally, the fuel would be injected and ignited before top dead center of the piston. The fuel can be injected later and perhaps continuously during the early part of the expansion stroke for a mostly constant-pressure combustion process and especially for diesel fuel. The fuel air mixture is ignited preferably before the piston reaches top dead center and the combusted charge expands against the piston as it moves toward bottom dead center. At near bottom dead center of the piston stroke, the exhaust valve(s) is opened and the exhausted mixture is scavenged by positive displacement by the piston **22** during the scavenging stroke. If the intake valve **16**, **16'** is opened earlier some valve overlap with the exhaust valve may be required for scavenging. If the intake valves **16**, **16'** are opened late no valve overlap would be needed, exhaust valve(s) **17**, **17'** closing at approximately the same time that intake valve(s) **16**, **16'** open. The expansion ratio of the engine could be about 19:1, for diesel fuel, 14:1 for gaseous fuel or gasoline, which expansion ratio is established by dividing the cylinder displacement volume by the volume of the combustion chamber.

Alternate operation method **2**

Near the end of the power stroke in cylinder **7** the exhaust valve(s) **17**, **17'** open, and with exhaust valve **17**, **17'** still open, begins its second or scavenging-charging stroke. At a point near mid-stroke, (e.g., about 90° before top dead center,) the exhaust valve **17**, **17'** still being open, the intake valve opens with a small valve overlap to admit high pressure scavenging and charging air. One or more intake valves **16** can be recessed, as in item **30** in FIG. **11**, in order to direct the first inlet air down and along the cylinder **7** wall in order to loop-scavenge the cylinder during the very small overlap of valves **16**, **16'** and **17**, **17'**. The exhaust valve **17**, **17'** remains open to the point at which compression should begin and then receives the air charge as it closes, intake valve(s) **16**, **16'** closing soon after, with the cylinder adequately scavenged and charged with temperature-adjusted fresh air now at high pressure. The piston **22** continues its stroke to compress the charge producing a low compression ratio, ideally 13:1 to 4:1, depending on the type of fuel used. The compression ratio is established by the point in the stroke of piston **22** in which the exhaust valve(s) **17**, **17'** closes, and is calculated when the remaining displaced volume of the cylinder is divided by the volume of the combustion chamber.

As piston **22** continues to rise from point x, where the exhaust valve closes establishing the compression ratio, and where compression of the charge started, the pressure starts

to rise at the same point. The dense cooled air charge with the short compression stroke will produce a low compression ratio with a very heavy charge, with low maximum cylinder pressure but with high effective mean cylinder pressure for great torque and power.

The pressure ratio will be established by the density, pressure and temperature of the incoming charge, the length of time inlet valve(s) **16, 16'** are open and the point the exhaust valve(s) **17, 17'** closes. The later the exhaust valves **17, 17'** close, the less the charge-air expands after injection, the less work is required to compress the charge and the less overlap of inlet and exhaust valve is required and the lower is the compression ratio.

At some point, perhaps as early as 150–120 degrees before piston top dead center position, cylinder **7** would be adequately scavenged and the exhaust valve **17, 17'** could be closed before, or no later than, the time the intake valves **16, 16'** are opened to admit, in this case, the entire air charge, most of the exhausted gases having been displaced by scavenging. (In some cases some residual exhaust gases are beneficial and experiments will show at what point both intake and exhaust valves can be closed without any overlap.) In this instance the "effective" compression ratio could be as low as 3:1 or even 2:1, again producing low maximum cylinder pressure and temperature but with high mean effective pressure. Fuel can be injected as early as at the point the exhaust valve closes and can be as early as about 150°–120° before the end of the compression stroke. The fuel-air mixture is ignited before, at, or after, top dead center and the expansion (2nd) stroke takes place. The expansion ratio is established by dividing the cylinder's displaced volume by the combustion chamber volume and could be about 19:1 for diesel applications, and 14:1 for gasoline or gaseous fuels.

An engine control module (ECM) **27** can manage temperatures and densities of the charge being introduced into the cylinder **7** or combustion chamber **130** and the timing of the inlet into the combustion chamber and can thus adjust charge densities, turbulence, temperatures and pressures providing a means of restraining peak temperatures and pressures yet with a mean effective cylinder pressure higher than in a normal engine, when needed, and further providing for lower levels of unwanted polluting emissions.

A suggested light-load, fuel efficient operation system as indicated on line B(bp) in **FIG. 13**, would be thus: A nominal compression ratio of 13:1 could be chosen, with an expansion ratio of 19:1. The latter would establish the volume of the combustion chamber, the former would establish the maximum charge pressure (not maximum cylinder pressure), about 530 psi when compressed adiabatically. The ECM **27** would signal shutter valves **5** and air bypass control valve **6** to re-circulate the air being pumped through compressor **2**, back through the compressor **2** without being compressed or for any type compressor, open a waste-gate valve to bypass the compressor. Shutter valve **5** bypasses the intercooler **10** and directs the charge into the inlet of compressor 1. Compressor **1** would compress the charge adiabatically to say, 7:1 compression ratio. ECM **27** controls would bypass intercoolers **11** and **12** and introduce the charge into manifolds **13** and **14** with the heat-of-compression retained. If the exhaust valves **17, 17'** are closed and the inlet valve **16, 16'** of cylinder **7** are opened near the end of the compression stroke of piston **22** the effective compression ratio can be as low as 2:1, producing a "nominal" compression ratio of 14:1. (If the exhaust valves **17, 17'** are closed and the inlet valve **16, 16'** are opened earlier in the exhaust stroke, the injected charge-air should be of lower pressure and the "effective" compression ratio, that in-cylinder compression producing heat, would be greater. If the intake valves **16, 16'** opened at mid-stroke, after exhaust valves **17, 17'** close, and a nominal compression ratio of 13:1 were desired with an effective compression ratio of 4:1, then the charge introduced into the cylinder at mid-stroke should be compressed 4:1.) The uncooled charge is then compressed in the cylinder with an effective compression ratio of 4:1, and in either case, with a pressure of about 530 psi and a temperature above 900° F. The fuel/air charge is then ignited and expanded against the piston to the full volume of the power cylinder with an expansion ratio of 19:1.

At such a time that great power was required, the ECM **27** could signal the air bypass valve **4** and **6** to close. Compressor **2** then begins to compress the air charge to a higher pressure, at the same time ECM **27** would open shutter valves **3** and **5** to send the charge-air through the intercoolers **10, 11** and **12**. Therefore, as the charge-air is cooled, and could be to as low as 150–200° F., more air is now pumped into the engine on the back side by the additional compression stage **2**, to prevent a substantial pressure drop in the charge-air due to the cooling of the charge before combustion. The air charge in the combustion chamber is now compressed 2:1 (line B(ic), FIG. **13**) and is maintained near the design pressure, in this case about 500–530 psi, although cooled, to significantly increase the density of the charge and the torque and power of the engine. The cooler air charge provides lower peak temperature and pressure and coupled with the high turbulence causes production of less unburned hydrocarbons, NO_x, and other polluting emissions and with smoke and particulates being virtually eliminated to a very rich fuel-air mixture. The air-fuel charge is now ignited and expanded to the full volume of the cylinder with an expansion ratio of 19:1 although the effective compression ratio is only 2:1 (see line B (ic) in FIG. **13**).

With either operation scheme the engine can be supercharged to a higher state than can conventional engines because in most cases the inlet valve is closed at the time of combustion chamber charging and a cooler air charge prevents detonation and reduces polluting emissions. Also in most cases residence time of the fuel is less than that required for pre-knock conditions to occur.

When less power is needed, as during vehicle cruising or light-load power generation, the engine operation could revert to light-load operation, e.g., one stage of compression could be cut out and the first cooler **10** bypassed by the air charge being re-circulated by shutter valve **5** and by bypass valve **6**. Shutter valve **3** and air bypass valve **4** could direct all of the charge from compressor **1** passed intercoolers **11** and **12** with the heat-of-compression retained, into manifolds **13** and **14** and to the cylinder for the less dense, more fuel efficient operation mode.

Still referring to FIG. **8**, there is shown a view of a cylinder head of the engine of FIG. **8** through FIG. **11** and FIG. **25**, showing optional pressure balanced intake valves with cooling being provided by conduits with intake conduit **29** and outlet conduit **29'**, one-way valves (not shown) which allow expansions **28** on the valve stems, as they reciprocate with intake valves **16** to pump a cooling and lubricating oil or oil-air mixture through the spaces above the valve stem expansions.

Pressure-balanced intake valves **16, 16'** in FIGS. **8, 11**, and **25**, and **16-A** in FIGS. **9** and **10** provide for rapid intake valve closure and allows large non-restricting intake valves and smaller than normal valve return springs. (When the intake valve is opened, pressure equilibrium almost imme-

diately takes place below the valve head within the combustion chamber and above the valve head within the intake runner, then the pressure in the intake runner acting on the piston-like arrangement on the valve stem tends to cause the valve stem to follow the down-slope of the cam profile for rapid valve closure. Also, a new "Magnavox" pressure operated, "square wave" intake valve could be used in the engines of this invention.)

The operation of the pressure balanced intake valves is in this manner:

The pressure balanced intake valves have expansions **28** on the valve stems, the lower surface of which are exposed to gases in conduit **15**A. When the valve stem is depressed by a cam **21** and intake valve(s) **16** opens in FIG. **8** through FIG. **11**, or FIG. **25** any pressure in conduit **15**A is equilibrated with pressure in the combustion chamber and at that time the only reactive force is by any pressure in conduit **15**A which is against the underside of valve stems expansions **28**, causing a rapid closure of the valve. One-way valves (not shown) on inlet and outlet channels **29** and **29'** are preferably provided for oil or oil-air mixture induction through spaces above expansions **28**, and alternatively through the valve stem expansions **28**. The oil inlet could be at a low point in the cylinder head where oil would collect to supply the cooling system. Alternatively, oil inlet line **29** could be connected to an oil or oil-air mix supply line. The inlet conduit **29** and the exit conduit **29'** from the cooling system would be fitted with one-way valves and the exit conduit **29'** could be higher than the inlet conduit **29** or could be connected to an oil discharge line leading to the engine oil reservoir. The valve stem expansions **28** could also have a channel through them with a one-way valve on each side. Since historically exhaust valves have been difficult to cool, this same system would provide adequate cooling for the exhaust valves even though there is not great pressure in the exhaust conduit. This system would then be applied to exhaust valves **17** from which exhaust ports **18** originate, or to the exhaust valves of any engine to provide long life for the exhaust valves and the valve seats.

On large engines the lines from the pumps described here can converged into larger lines and the oil pumping provided by them could replace the conventional oil pump on said engine.

The Engine **100**^{9} of FIG. **9**

Referring now to FIG. **9**, there is shown a six cylinder reciprocating internal combustion engine having one atmospheric air intake, in which all of the cylinders ***7a–7f*** (only one (**7f**) is shown in a sectional view) and associated pistons ***22a–22f*** operate in a 2-stroke cycle and all power cylinders are used so as to produce six power strokes per revolution of crankshaft **20** for producing power to a common crankshaft **20** via connecting rods ***19a–19f***, respectively. A primary compressor **1**, in this figure a double-acting reciprocating type, is shown which, with air conduits as shown, supplies pressurized air to one or more cylinder intake valves **16**-A and **16**-B (the latter only if a primary charge to valve **16**-B comes from conduit **15**). A secondary compressor **2** of the Lysholm type is shown in series with compressor **1**. An air inlet **8** and associated compressors **1** and/or **2** with inlet conduits and manifolds **13** and **14** supply charge-air, which has been compressed to a higher than atmospheric pressure, to the air intake runner **15**-A and intake valve **16**-A to cylinder **7**. A second conduit **32** directs an air charge from conduit **110** through optional shut-off valve **33** to intake valve **16**-B to supply lower pressure air to the same cylinder. Alternatively a second conduit **15**-B from conduit **15**-A can be fitted with a pressure control valve **25** (both in phantom) and can direct the lower pressure air charge to the intake valve **16**-B. Intercoolers **10**, **11** and **12** and control valves **3**, **4**, **5** and **6** are used to help control the density, weight, temperature and pressure of the charge air. The intake valves are timed to control the compression ratio of the engine. The combustion chambers are sized to establish the expansion ratio of the engine.

The engine of FIG. **9**, FIG. **11** and FIG. **25** have cam shafts **21** fitted with cams and are arranged to rotate at engine crankshaft speed in order to supply one power stroke for each power piston for each crankshaft rotation.

The engine **100**^{9} shown in FIG. **9** is characterized by a more complete expansion process and a lower compression ratio than typical engines, and is capable of producing a combustion charge varying in weight from lighter-than-normal to heavier-than-normal and capable of selectively providing a mean effective cylinder pressure higher than can the conventional arrangement in normal engines with similar or lower maximum cylinder pressure. Engine control module (ECM) **27** and variable valves **3**, **4**, **5** and **6** on conduits as shown provide a system for controlling the charge pressure, density, temperature, and mean and peak pressure within the cylinder which allows greater fuel economy, production of greater power and torque at all RPM, with low polluting emissions for both spark and compression ignited engines. In alternate embodiments, a variable valve timing system with the ECM **27** can also control the time of opening and closing of the intake valves **16**-A or **16**-B or both, to further provide an improved management of conditions in the combustion chamber to allow for a flatter torque curve, higher power and with low levels of both fuel consumption and polluting emissions.

Brief Description of Operation of Engine **100**^{9} shown in FIG. **9**

The new cycle engine **100**^{9} of FIG. **9** is a high efficiency engine that attains both high power and torque, with low fuel consumption and low polluting emissions.

The new cycle is an external compression type combustion cycle. In this cycle part of the intake air (all of which is compressed in the power cylinders in conventional engines) is compressed by at least one ancillary compressor. The temperature rise at the end of compression can be suppressed by use of air coolers, which cools the compressed air, and by a shorter compression stroke.

During operation air is supplied to an intake valve **16**-B of the power cylinder **7** which has been increased in pressure by perhaps one-third to one atmosphere or more through an air intake conduit **32** leading from ancillary compressor **2**, or the air enters by conduit **15**-B and a pressure control valve **25**. A second air conduit **15**A selectively supplies charge-air at a higher pressure to a second intake valve **16**-A leading to the same power cylinder **7**. (In this design the intake valve **16**-B admits the low pressure air after exhaust valves **17** open near bottom dead center in the power stroke, and exhaust blowdown has occurred.) Exhaust blowdown occurs after exhaust valve(s) **17** open and now intake valve **16**-B opens and closes quickly to inject low pressure scavenging air. The cylinder **7** is further scavenged by loop scavenging as piston **22** begins its compression stroke. Intake valve **16**-B is now closed and piston **22** rises in the compression stroke to the point where compression should begin at which point exhaust valve **17** closes sealing cylinder **7** and establishing the compression ratio. Compression continues and at near top dead center, at a point deemed appropriate, fuel

being present, the charge is ignited by spark or compression and the power stroke takes place.

When more power is desired, a secondary air charge from conduit **15**-A can be introduced into the power cylinder at the time of, or after closure of exhaust valve(s) **17***a* during the compression stroke, by intake valve **16**-A which introduces a higher pressure air charge, and quickly closes, in order to increase the charge density. Alternatively, the primary air charge may be boosted to a higher pressure by adjusting air bypass valve **6** to send more air through compressor **2**, by increasing the speed of compressor **2** or by changing the setting on the control valve **25** on the conduit **15**-B which alternatively supplies the low pressure primary air charge to intake valve **16**-B. The temperature, pressure, amount and point of injection of a secondary charge, if added, is adjusted to produce the desired results.

For light-load operation an intake valve disabler **31** (there are several on the market, for example, Eaton Corp. and Cadillac) can disable intake valve **16**-A when light-load operation does not require a high mean effective cylinder pressure. Alternatively, during the time the low pressure air to intake valve **16**-B is supplied by conduit **15**-B the air bypass valve (ABV) **6** can be opened to recirculate some of the charge-air back through the compressor **2** in order to relieve the compressor of compression work during light-load operation. Additionally, and preferably, air bypass valve **4** can re-circulate part or all of the air pumped by compressor **1** back to the inlet of compressor **1** on demand in order to reduce pressure and density of the secondary charge going through intake valve **16**-A.

One suggested, preferred method of operation of the new-cycle engine **100**^{9} is thus:

1. Intake air at greater than atmospheric pressure that has been compressed by at least one compressor **2** and has had its temperature adjusted by bypass systems or charge-air cooler **10**, is introduced into the cylinder **7** through intake valve **16**-B, which is opened by a small lobe on cam **21**-B at near bottom dead center, at the end of the power stroke (perhaps at bottom dead center) after exhaust valve(s) **17**, **17'** have opened earlier say, at 40° before bottom dead center, for exhaust blowdown. The exhaust valves remain open after bottom dead center for further scavenging of the cylinder **7**. The intake valve **16**-B closes at near bottom dead center.
2. After the power stroke is complete and cylinder **7** is filled with fresh charge, the exhaust valve(s) **17** is left open for a period of time after the piston has passed bottom dead center (with intake valve **16**-B now closed) in order to further scavenge the power cylinder with the fresh air charge present and further, in order to establish a low compression ratio of the engine, the compression ratio being established by the displaced cylinder volume remaining at the point of the exhaust valve **17** closure, being divided by the volume of the combustion chamber.
3. With the cylinder **7** now filled with fresh air, the compression (2nd) stroke continues and, at some point the exhaust valve **17** is closed and compression begins for a small compression ratio. This makes it possible to lessen the temperature rise during the compression stroke. Compression continues, fuel is added if not present, and the charge is fired a the appropriate point near top dead center and the power stroke occurs.
4. (a) Alternatively, when greater power is required, a secondary compressed, temperature-adjusted air charge is injected into the cylinder **7** by intake valve **16**-A opening and quickly closing during the compression stroke at the point at which the exhaust valve closes, or later in the stroke, to produce a more dense charge in order to provide the torque and power desired of the engine.

   (b) When even greater power is required, the secondary air charge can be increased in density and weight by being passed through one or more intercoolers **10**, **11** and **12** and by increasing compressor speed or by cutting in another stage of auxiliary compression or by passing more of the charge air through the operational compressors.
5. Near bottom dead center of the piston position, exhaust valves **17**, **17'** open and the cylinder is efficiently scavenged by blowdown and by the air injected by primary intake valve **16**-B.

Detailed Description of the Operation of the Engine **100**^{9} of FIG. **9**

Near the end of the power (1st) stroke of the piston **22**, perhaps at about 40° before bottom dead center position of piston **22**, the exhaust valves **17** open for exhaust blowdown, shortly after low pressure air flows through air conduit **32** from conduit **106** and optional shut-off valve **33** and compressor **2** or alternatively through air conduit **15**-B supplied by a pressure regulator valve **25** from compressed air line **15**-A (as shown in FIG. **9**, and FIG. **10**), through an intake valve **16**-B into the cylinder **7**. Intake valve **16**-B closes shortly after bottom dead center or, perhaps at bottom dead center. Exhaust valves **17** remain open during the first part of the compression (2nd) stroke of piston **22**. The cylinder **7** is now efficiently scavenged by blowdown and by loop scavenging and at any point during the compression stroke, the cylinder **7**, now filled with fresh air, the exhaust valves **17**, **17'** can close. But since a low compression ratio is desired, the exhaust valves **17**, **17'** can be held open until the piston has reached the point that is desired to establish the compression ratio. At, or after the time exhaust valves **17***a* and **17***a'* are closed, a secondary charge of high pressure, temperature adjusted air which has been compressed by a compressor(s) can be injected by intake valve **16**-A into the same cylinder, after which intake valve **16**-A closes. In addition, when very high torque and power is needed, the density of the secondary charge-air can be greatly increased by cutting-in compressor **2** or by increasing the speed of compressor **2**, if already compressing, as in FIG. **9**, directing more air through compressors **1** and/or **2** by valves **4** and/or **6**, and by routing the charge wholly or in part through intercoolers **10**, **11** and **12**.

In this system, regardless of the point the exhaust valve is closed to establish the compression ratio, the primary fresh air charge trapped in the cylinder **7** will be lighter than normal and the compression ratio will be lower than normal, therefore, if needed, a highly compressed, temperature adjusted air charge can be injected at exhaust valve closure or later in the stroke, to provide a heavier than normal charge but with the temperature rise being restrained by the cooled charge and the short compression stroke. This produces a greater than normal mean effective cylinder pressure when combusted for great torque and power but still with an expansion ratio greater than the compression ratio.

For light-load operation a shut-off valve, or a valve disabler **31** (in phantom) on the high pressure intake valve could temporarily restrain the intake air, or hold the valve **16**-A closed. This would add to the fuel economy of the engine. Alternatively, if compressor **2** is not supplying air to conduit **32** and intake valve **16**-B, during light-load operation the shutter valve **5** could be closed and the air bypass valve **6** can be opened so that air pumped by compressor **2**

would be returned in part or wholly to the inlet conduit of the compressor **2** with little or no compression taking place there.

An ancillary automatic intake valve **26**, FIG. **10**, can be arranged, as shown in FIG. **10**, to prevent any back-flow of charge-air into conduit **15**-A if the cylinder **7** pressure should approximate or exceed the pressure in conduit **15**-A during the compression stroke of piston **22** before the closure of intake valve **16**-A.

Alternatively, the ancillary automatic valve **26** of FIG. **10** could be used to provide a constant or a variable pressure ratio in cylinder **7**. In this case valve **16**-A would be kept open to near top dead center and the closure time of valve **26** would be adjusted by the pressure differential in cylinder **7**, controlled by valves **3**, **4**, **5** and **6** by compressor(s) output and by any throttle valve present. The automatic valve **26** could be of the spring-retracted disc type and could be fabricated of metal or ceramics.

Fuel can be carbureted, injected in a throttle body **56**, shown in FIG. **15** through FIG. **17** and item **56** in FIG. **19** and FIG. **20**, or the fuel can be injected into the inlet stream of air, injected into a pre-combustion chamber (similar to that seen in FIG. **21**) or, injected through intake valves **16**-A, or it may be injected directly into the combustion chamber at point x during the exhaust-compression stroke, at the time or after the piston **22** has passed point x in the compression stroke. The fuel can also be injected later and in the case of diesel operation can be injected at the usual point for diesel oil injection, perhaps into a pre-combustion chamber or directly into the combustion chamber, perhaps as FIG. **21**, or directly onto a glow plug. After the temperature-and-density-adjusting-air charge has been injected, if used, compression of the charge continues and with fuel present, is ignited at the opportune time for the expansion stroke. (The compression ratio is established by the displaced volume of the cylinder remaining after point x has been reached, being divided by the volume of the combustion chamber. The expansion ratio is determined by dividing the cylinders total clearance volume by the volume of the combustion chamber.)

Now the fuel-air charge is ignited and the power (2nd) stroke of piston **22** takes place as the combusted gases expand. Near bottom dead center of the power stroke the exhaust valve(s) **17**, **17'** open and the cylinder **7** is efficiently scavenged by blowdown and by loop scavenging at the end of the power stroke and largely during the piston **22** turn-around time.

It can be seen that the later the point in the compression stroke that point x is reached (the later the exhaust valve is closed), the lower is the compression ratio of the engine and the less the charge is heated during compression.

It can also be seen that the later the temperature-density-adjusting charge is introduced, the less work will be required of the engine to compress the charge, the later part of which has received some compression already by compressor **1** and/or by an ancillary compressor **2**. In some cases where the load is light and fuel economy important the ancillary compressor could be bypassed with the secondary air charge perhaps eliminated temporarily and the total charge weight could be less than that of a conventional engine and with the extended expansion ratio produce even better fuel economy.

During light-load operation of this 2-stroke cycle engine (FIG. **9** and FIG. **9**-B) such as vehicle cruising or light-load power generation, the secondary air charge can be eliminated by disabling high pressure intake valve **16**-A temporarily (several valve disabling systems Eton, Cadillac, etc.) or air can be shut off to intake valve **16**-A and the engine still produce greater fuel economy and power with the air charge being supplied by compressor **2** or **1** through conduits **15**-A, **110**, **32** and intake valve **16**-B.

The Engine 100^{9-B} of FIG. 9-B

FIG. **9**-B is a schematic representation of a six-cylinder reciprocating internal combustion engine 100^{9-B} which is for the most part identical to the engine 100^{9} of FIG. **9**. The characteristics and operation and structure of the engine 100^{9-B} of FIG. **9**-B are substantially similar to the engine 100^{9} of FIG. **9** and, except as necessary to point out specific points of distinction, such characteristics, operation and structure are not repeated here. Reference should be made to the sections on characteristics, structure and operations (both brief and detailed) previously presented with respect to the engine 100^{9} of FIG. **9**.

The major point of distinction between engine 100^{9} and engine 100^{9-B} is that engine 100^{9-B} represents an embodiment of the engine 100^{9} wherein the compressors **1**,**2** are of alternate types. That is, in 100^{9-B}, the primary compressor **1** is shown as a Lysholm rotary compressor (as opposed to the reciprocating-type compressor of engine 100^{9}) and the secondary compressor **2** is of the turbo-type (as opposed to the Lysholm-type of 100^{9}). Although conduit **32** from conduit **110** (designated as **106** in FIG. **9**) and optional shut-off valve **33** is shown supplying intake valves **16**-B of only two cylinders of the engine, it is understood that other intake runners (not shown) distribute air from conduit **110** to the remainder of the intake valves **16**-B of the engine, or that conduit **32** supplies an "air box" or manifolds which distribute the air to all of the intake valves **16**-B.

Referring now to FIG. **10** there is shown the same engine and the same operating system as described for the engines of FIG. **9** and FIG. **9**-B, but has an optional added feature in that the secondary intake valve **16**-A has an ancillary valve **26** which is automatic to prevent charge-air back-flow from cylinder **7**. This feature will prevent any back-flow from occurring during the compression stroke of the engine of this invention, should the cylinder pressure approximate or exceed the pressure in conduit **15**-A before the intake valve **16**-A was fully closed. (This optional automatic valve **26** could be of the spring-retracted disc type, or could be any type of one-way valve.) An automatic valve at this place could be used to regulate the pressure ratio in cylinder **7** during the compression of the charge. In this case intake valve **16**-A could be kept open to near top dead center, valve **26** automatically closing the intake below valve **16**-A during compression, ignition and power stroke of the charge. Furthermore, the use of automatic valve **26** would allow the pressure ratio of the engine to be adjusted by simply adjusting the pressure in conduit **15**-A, with intake valve **16**-A being kept open to near top dead center of piston **22**. The ancillary valve **26**, if present, would also impart a tangentially oriented swirl turbulence to the combustion charge as would also, shrouding of intake valve **16**-A.

The Engine 100^{11} of FIG. 11

Referring now to FIG. **11**, there is shown a six cylinder reciprocating internal combustion engine 100^{11} with one atmospheric air intake, in which all of the cylinders **7***a*–**7***f* (only one (**7***f*) of which is shown in a sectional view) and associated pistons **22***a*–**22***f* operate in a 2-stroke cycle and all power cylinders are used for producing power to a common crankshaft **20** via connecting rods **19***a*–**19***f* respectively. A primary compressor **1**, in this figure a double-acting

reciprocating type, is shown which, with an air conduits, as shown, supplies pressurized air to one or more cylinder intake valves **16***a* and **16***b*. A secondary compressor **2** of the Lysholm type is shown in series with compressor **1**. An air inlet **8** and associated inlet conduit and manifolds **13** and **14** supply air charge which has been compressed to a higher than atmospheric pressure, to a cylinder intake conduit **15** which supplies charge-air to two intake valves, which intake valves **16***a* and **16***b* operate independently of each other but open into the same cylinder. Intercoolers **10**, **11** and **12** and control valves **3**, **4**, **5** and **6** are used to help control the air charge density, weight, temperature and pressure. The intake valves are timed to control the compression ratio of the engine. The combustion chambers are sized to establish the expansion ratio of the engine.

The engine **100** of FIG. **8**, FIG. **9**, FIG. **10** and FIG. **11** have cam shafts **21** fitted with cams and are arranged to rotate at engine crankshaft speed in order to supply one power stroke for each power piston for each crankshaft rotation.

The engine $\mathbf{100}^{11}$ shown in FIG. **11** is characterized by a more extensive expansion process, a low compression ratio and capable of producing a combustion charge varying in weight from lighter-than-normal to heavier-than-normal and capable of selectively providing a mean effective cylinder pressure higher than can the conventional arrangement in normal engines, but having similar or lower maximum cylinder pressure. Engine control module (ECM) **27** and variable valves **3**, **4**, **5** and **6** on conduits, as shown, provide a system for controlling the charge pressure, density, temperature, and mean and peak pressure within the cylinder which allows greater fuel economy, production of greater power and torque at all RPM, with low polluting emissions for both spark and compression ignited engines. In alternate embodiments, a variable valve timing system with the ECM **27** can also control the time of opening and closing of the intake valves **16***a* or **16***b* or both, to further provide an improved management of conditions in the combustion chamber to allow for a flatter torque curve, and higher power, with low levels of both fuel consumption and polluting emissions.

Brief Description of Operation of Engine $\mathbf{100}^{11}$ Shown in FIG. **11**

The new cycle engine $\mathbf{100}^{11}$ of FIG. **11** is a high efficiency engine that attains both high power and torque, with low fuel consumption and low polluting emissions.

The new cycle is an external compression type combustion cycle. In this cycle part of the intake air (all of which is compressed in the power cylinders in conventional engines) is compressed by an ancillary compressor. The temperature rise at the end of compression can be suppressed by use of air coolers, which cools the intake air, and by a shorter compression stroke.

During operation air is supplied to the power cylinder **7** at a pressure which has been increased by perhaps from one-third to several atmospheres, or greater through an air intake conduit **15**. Valve **16***b* opens by pressure on the top of the valve stem from a very small lobe on cam **21**-A for a short period of time near bottom dead center position of piston **22** in order to scavenge the cylinder and provide fresh charge-air. Exhaust valves **17**, **17'** open for exhaust blowdown slightly before intake valve **16***b* opens to admit scavenging air. The cylinder **7** is efficiently scavenged mostly during the turnaround time of piston **22**. During the first part of the compression stroke, perhaps as early as 10–20° after bottom dead center of piston **22** position, the first intake valve **16***b* closes, at a later time the exhaust valve **17**, **17'** closes, at which point compression of the fresh air charge starts, which establishes the compression ratio of the engine. At the point the exhaust valves **17**, **17'** closes or any point later, the second intake valve **16***a* and perhaps **16***b*, by a second lobe **21**-C is, preferably, opened to introduce more of the temperature and density adjusted charge, if needed.

An intake valve disabler **31** in FIG. **10** (there are several on the market, for example, Eaton Corp. and Cadillac) can disable intake valve **16***a* when light-load operation does not require a high mean effective cylinder pressure. Alternatively, the air bypass valve (ABV) **6** is opened wholly or partially to re-circulate some or all of the charge-air back through the compressor **2** in order to relieve the compressor of compression work during light-load operation. Additionally, air bypass valve **4** can re-circulate part or all of the air pumped by compressor **1** on demand in order to reduce charge pressure and density.

One suggested, preferred method of operation of the new cycle engine $\mathbf{100}^{11}$ is thus:

1. Intake air at greater than atmospheric pressure that has been compressed by at least one compressor and has had its temperature adjusted by bypass systems and charge-air coolers are introduced into the cylinder **7** through intake valve **16***b* which is opened by a very small lobe **21**-D on cam **21**-A at or near bottom dead center of piston **22** at the end of the power-stroke, as exhaust valve(s) **17***a*, **17***a'* have opened a little earlier (perhaps 40° before bottom dead center) for exhaust blowdown. The exhaust valve **17** remains open through bottom dead center for efficient scavenging of the cylinder **7** by blowdown and loop scavenging. Intake valve **16***b* closes as the fresh high-pressure charge very quickly scavenges the cylinder **7**.
2. After the power stroke is complete the exhaust valves **17** are left open for a period of time after the piston has passed bottom dead center (with intake valve **16***b* now closed) in order to continue to scavenge the power cylinder with the fresh air charge and father, in order to establish a low compression ratio of the engine, the compression ratio being established by the displaced cylinder volume remaining at the point of the exhaust valve **17** closure being divided by the volume of the combustion chamber.
3. With the cylinder **7** now filled with fresh air which is near atmospheric pressure, the compression (2nd) stroke continues and, at the point the exhaust valve is closed, compression begins for a small compression ratio. This makes it possible to lessen the temperature rise during the compression stroke. Compression continues, fuel is added, if not present, and the charge is fired at the appropriate point near top dead center and the power-stroke occurs.
4. (a) Alternatively, at any point deemed appropriate at the time or after the exhaust valve has closed and compression of the charge has begun, a secondary density and temperature-adjusted air charge can be injected through intake valve **16***a*and perhaps by a second lobe **21**-C on cam **21**-A, through intake valve **16***b*. Compression continues with the secondary air charge injection, fuel is added, if not present, the charge is ignited and combustion produces a large expansion of the combusted gases producing great energy. This energy is turned into high torque and power by the engine.

   (b) When even greater power is required, the air charge can be increased in density and weight by being passed through one or more intercoolers and by increasing

E-FILED
Thursday, 09 February, 2006 05:27:55 PM
Clerk, U.S. District Court, ILCD

compressor speed or by cutting in a second stage **2** of auxiliary compression, FIG. **11**. Alternatively, the timing of closing exhaust valve **17** and of the opening of intake valve **16***a* could be altered temporarily to close earlier and to open earlier, respectively, for a larger charge.

5. Near bottom dead center of the piston, exhaust valves **17**, **17'** open and the cylinder is scavenged by blowdown and by the air injected by primary intake valve **16***b*.

Detailed Description of the Operation of the Engine **100**[11] of FIG. **11**

Near the end of the power (1st) stroke of the piston **22**, perhaps at about 40° before bottom dead center position of piston **22**, the exhaust valves **17** open for exhaust blowdown, shortly after, high pressure air flows through air conduit **15** from manifold **13** and **14**, as shown in FIG. **11**, through an intake valve **16***b* into the cylinder **7**, the cylinder **7** is scavenged, intake valve **16***b* closes. (Intake valve head **30** can be recessed as shown in FIG. **11** in order to form a pipe-like opening into cylinder **7** so that when the charge-air is highly compressed, and as much as 500–530 psi is feasible, the small lobe **21**-D on cam **21**-A of intake valve **16***b* lets in a small blast of the high pressure air which is directed downward for loop scavenging, during or just after piston **22** turnaround at bottom dead center piston position.) Exhaust valves **17** remain open during the first part of the compression (2nd) stroke of piston **22**. The cylinder **7** is now efficiently scavenged by blowdown and by loop scavenging and at any point during the compression stroke, the cylinder **7**, now being filled with fresh air, the exhaust valves **17**, **17'** can close. But since a low compression ratio is desired, the exhaust valves **17**, **17'** can be held open until the piston has reached the point that is desired to establish the compression ratio. At, or after the time exhaust valve **17** closed, a secondary charge of high pressure temperature adjusted air which has been compressed by compressor **1** and/or **2** can be injected by the second intake valve **16***a* and, if desired, by another lobe **21**-C (in phantom) on the first valve **16***b* into the same cylinder. (When high torque and power is needed, the density of the charge-air can be greatly increased by increasing the speed of the primary compressor **1** or by cutting in another stage of compression, as in compressor **2**, FIG. **11**, and routing the charge through aftercoolers **10**, **11** and **12**. Also the speed of compressor **2** can be increased to shove in more charge on the back end.) Compression would continue, for a small compression ratio, fuel would be added, if not present, the charge would be ignited and the gases expanded against piston **22** for the power stroke.

For light-load operation, a shut-off valve (or a valve disabler **31** shown in FIG. **10** on the intake valve **16**-A) could temporarily restrain the intake air, or hold the intake valve **16***a* closed. This would add to the fuel economy of the engine. Alternatively, during light-load operation the shutter valve **5** could be closed and the air bypass valve **6** opened so that air pumped by compressor **2** would be returned to the inlet conduit of the compressor **2** without any compression taking place. In the same manner valves **3** and **4** could return part of the air being pumped through back to the intake **106** of compressor **1**.

The ancillary automatic intake valve **26**, FIG. **10**, which can be of the spring-returned disc type, can be arranged, as shown in FIG. **10**, to prevent any back-flow of charge-air into conduit **15** if the cylinder pressure should equal or exceed the pressure in conduit **15** during the compression stroke of piston **22** before intake valve **16***a* had closed completely. (As in other engine designs herein presented, the optional automatic valve **26** shown in FIG. **10** can be utilized to control the pressure ratio of this engine. If the intake valve **16***a* is kept open to near top dead center, the closure of valve **26** and the pressure ratio of cylinder **7** would be controlled by control valves **3**, **4**, **5** and **6** and by compressor speed and by any throttle valve present.) Automatic valve **26** would seal the intake from conduit **15** during the last part of the compression stroke, ignition of the charge and during the power stroke.

Fuel can be carbureted, injected in a throttle body **56** in FIG. **15** through FIG. **17**, and **56** in FIG. **19** and **20**, or the fuel can be injected into the inlet stream of air, or injected into a pre-combustion chamber or, injected through intake valves **16***a*, **16***b*, (the latter during its second opening by lobe **21**-C on cam **21**-A), or it may be injected directly into the combustion chamber at or past point x in the exhaust-compression stroke. The fuel can also be injected later and in the case of diesel operation can be injected at the usual point for diesel oil injection, perhaps into a pre-combustion chamber or directly into the combustion chamber or directly onto a glow plug. After the temperature-and-density-adjusting-air charge has been injected, if used, compression of the charge continues and with fuel present, is ignited at the opportune time for the expansion stroke. (The compression ratio is established by the displaced volume of the cylinder remaining after point x (at exhaust valve closure) has been reached, being divided by the volume of the combustion chamber. The expansion ratio is determined by dividing the cylinders total clearance volume by the volume of the combustion chamber.) Now the fuel-air charge has been ignited and the power stroke of piston **22** takes place as the combusted gases expand. Near bottom dead center of the power stroke, the exhaust valve(s) **17** opens and the cylinder **7** is efficiently scavenged, first by blowdown, then by loop scavenging by air from intake valve **16***b* at the end of the power stroke or shortly after.

It can be seen that the later the point in the compression stroke that point x (the later the exhaust valve is closed) is reached, the lower is the compression ratio of the engine and the less the charge is heated during compression.

It can also be seen that the later the temperature-density-adjusting charge is introduced, the less work will be required of the engine to compress the charge, the later part of which has received some compression already by compressor **1** and/or by an ancillary compressor **2**. In some cases where the load is light and fuel economy important the ancillary compressor could be bypassed with the secondary air charge perhaps eliminated temporarily and the total charge weight could be less than that of a conventional engine.

Referring now to FIG. **12** there is shown a pressure-volume diagram for a high-speedDiesel engine compared to the engines of this invention, showing three stages of intercooled compression and a fourth stage of uncooled compression indicating a compression ratio of approximately 2:1, which arrangement is suggested for optimum power, with efficiency for the engine of this invention. (The charts of FIG. **13** and FIG. **14** show some of the improvements of the engine of this invention over current heavy-duty 2-stroke and 4-stroke engines.)

There are several features that improve the thermal efficiency of the engine of this invention. Greater power to weight ratios will provide a smaller engine with less frictional losses. The extended expansion ratio results in higher thermodynamic cycle efficiency, which is shown in theoretical considerations. There are also definite efficiency gains in a "staged" compression process even with external

compressors with associated piping, intercoolers and aftercoolers,etc. There is a very significant energy savings when air is compressed in intercooled stages. Less energy is used in compressing a charge to 500 psi in **2**, **3** or **4** intercooled stages than is used to compress the hot charge to the same 500 psi in a conventional engine. A normal engine uses approximately 20% of its own energy produced to compress its own air charge. Calculations show a significant energy savings in an engine if the air is compressed in aftercooled stages. Compressing a charge in only two stages to 531 psi (a 13:1 compression ratio) reduces the energy used by 15.8% over compressing to the same 531 psi level in a single stage as does the Otto and the Diesel Cycle engines. Three stages of intercooled compression raises the savings to 18%. This is the ideal. Degradation from the ideal should not exceed 25% which leaves a 13.5% energy savings. This 13.5% energy savings times the 20% of a normal engine's power used for compressing its own charge, is a 2.7% efficiency improvement by the compression process alone. This is one of the advantages of this engine which adds to the other thermal efficiency improvements. The low compression ratio, along with the large expansion ratio provides improvements in efficiency, torque, power and durability while lowering polluting emissions.

Note 1—In FIG. **12** the travel distance of the line for engine B on the horizontal coordinate indicates the theoretical volume at the greater density. The density is kept at that level at the actual combustion chamber volume (as shown by dashed line V) regardless of the density, by pumping in more charge at the back-side.

Referring now to FIG. **13**, there is shown a chart which compares various operating parameters of the engine of this invention (B) with the operation parameters of a popular heavy-duty, 2-stroke diesel cycle engine (A).

The parameters shown for engine A are the normal operating parameters for that engine, e.g., compression ratio, combustion temperatures, charge density, etc. The parameters chosen to illustrate for engine (B) are given at two different lower "nominal" compression ratios with corresponding "effective" compression ratios, intercooled and uncooled, for two different levels of power output. The columns showing charge densities and expansion ratios indicate the improvements in steady state power density improvements for engine B even at a substantially lower nominal compression ratio and an effective compression ratio as low as 2:1 as shown in FIG. **10**. The columns showing low temperatures at the end of combustion, and the column showing extended expansion ratios indicate much lower polluting emissions. Indicated power improvements of engine (B) over engine (A) even at the lower nominal compression ratio are no less than 50%.

Referring now to FIG. **14** there is shown a chart which compares the various operating parameters of the engine of this invention (B) with the operating parameters of a popular heavy-duty 4-stroke diesel engine (A).

When comparisons similar to those of FIG. **13** are made, steady state power and density improvements are much higher since engine (B) fires the denser charge twice as often as engine A for an indicated steady-state power density improvement of 180% over engine (A).

Referring now to FIG. **15**, there is shown a schematic drawing of an engine representing the engines of FIGS. **5–7**, and FIGS. **9–10** with a separate air cooler **10** for ancillary compressor **2**, with the primary compressor **1** supplying two manifolds **13** and **14** and having separate air coolers **11** and **12** and charge-air conduits **114** and **115**, and having each manifold having three cylinder air intake runners **15***a*–**15***c*, **15***d*–**15***f*, respectively. The engine of FIG. **15** operates the same as the engines of FIGS. **5–7** and FIGS. **9–10** and here shows suggested valving positions for shutter valve and air bypass valves for supplying the manifolds **13** and **14** with an air charge optimum for light-load operation of the engine of FIGS. **5–7** and FIGS. **9–10**. For light-load operation, the shutter valve **5** can be closed and the air bypass valve **6** of compressor **2** (if compressor **2** is not supplying primary air charge directly to conduit **32** and intake valve **15**-B) can be opened fully or partially so that part or all of the intake air of compressor **2** can be returned to the intake of compressor **2** with little or no compression occurring there. Also, the shutter valve **3** of compressor **1** can be closed, passing the air charge away from the coolers **11** and **12**, the air bypass valve **4** would be closed to prevent re-circulation of the now compressed and heated air back through compressor **1** and whose shutter valve **3** and air bypass valves are both directing the air charge uncooled into manifold **13** and **14** for a low density heated charge for light-load operation. Preferably compressor **2** would be kept operative in order to supply the primary air charge through conduits **110**, **32** and intake valve **16**-B for a more economical scavenging-charging system.

Referring now to FIG. **16**, there is shown suggested valve positions for supplying manifolds **13** and **14** with an air charge optimum for medium-load operation for engines of FIG. **16** or for the engines of FIGS. **5–7** and FIGS. **9–10**. For medium-load operation the shutter valve **5** of compressor **2** is closed and the air bypass valve **6** would be opened to pass the air charge uncooled and without compression to the intake of compressor I where closed shutter valve **3** and closed air bypass valve **4** directs the air charge now compressed by compressor **1** past the intercoolers to manifolds **13** and **14** with the air compressed and heated by compressor **1**, for medium-load operation.

Referring now to FIG. **17**, there is shown a suggested scenario for providing the engine of FIG. **17** or for the engines of FIGS. **5–7** and FIGS. **9–10** with a high density air charge for heavy duty, high power output operation. FIG. **17** shows both shutter valves **3** and **5** open and both air bypass valves **4** and **6** closed completely so that the primary stage of compression is operative and a second stage of compression has been made operative for maximum compression of the charge and the entire air charge is being passed through the intercoolers **10**, **11** and **12** to produce a cooled, very high density air charge to manifolds **13** and **14** and to the engines power cylinders for heavy-load operation. This produces a very high mean effective cylinder pressure for high torque and power with maximum cylinder pressure being the same as, or lower than that of normal engines.

Referring now to FIG. **18**, there is shown a schematic drawing of an alternative type of auxiliary compressor **2'** for the engines of FIGS. **5–7** and FIGS. **9–10** and for any other engine of this invention and a system of providing a system for cutting out the auxiliary compressor when high charge pressure and density is not needed. For relieving compressor **2'** of work, (if the air compressed by compressor **2** does not go directly to conduit **32** and valve **16**-B to supply the primary air charge) shutter valve **5** is closed and air bypass valve **6** is opened so that air pumped through compressor **2'** can re-circulate through compressor **2**, thus relieving the compressor of compression work.

Referring now to FIG. **19**, there is shown a schematic drawing of the engines of FIGS. **5–7** and FIGS. **9–10**, illustrating means of controlling charge-air density, temperature and pressure by varying directions of air flow through various electronic or vacuum operated valves and their conduits.

FIG. **19** also shows the various charge-air paths possible by using hollow arrows to indicate heated air paths and solid arrows to indicate the more dense intercooled air paths thereby indicating how charge-air temperatures can be thermastatically or electronically controlled by dividing the air charge into two different paths. Alternatively, all of the air charge can be directed past the air coolers or all can be directed through the air coolers, as shown in FIG. **19**. Also, FIG. **19** shows how the pressure output of compressor **1** and compressor **2** can be varied by partially or fully opening air bypass valves **4** and **6** or by completely closing one or both of these control valves. An engine control module (ECM) **27** is suggested for controlling the various operating parameters of the engines of this invention.

Referring now to FIG. **20**, there is shown is a schematic drawing depicting an alternate arrangement in which an electric motor **34** preferably drives the compressor(s) of any of the engines of the present invention.

Charge-air Cooler Bypass (ACB) "Shutter Valve" Control

In this section are described aspects of preferred control components which find application in connection with any of the engines (4-stroke and 2-stroke) of the present invention.

Outline: Valves **3** and **5** are charge-air-cooler bypass solenoid (ACB) valves. In charge-air cooler bypass control, the intake air is switched between two routes by valves **3** and **5**, independently of each other: either (a) valve **5** directs the flow from compressor **2** directly to the intake conduit of compressor **1** or (b) through the charge-air cooler **10** before flowing to the intake conduit of compressor **1**. Valve **3** directs the flow from compressor **1** either (a) to the conduit **111/121/122** leading directly to the intake manifolds **13** and **14** or (b) it passes the air charge through charge-air coolers **11** and **12** before it flows to manifolds **13** and **14**.

An engine control module (ECM) **27** can control the air cooler bypass valves **3** and **5**. The bypass valves may be a shutter type valve to pass all or none of the air charge in either direction or valves **3** and **5** may be of a helical solenoid or other type of valve which can pass part of the air charge through bypass conduits **121** and **122** and part through air coolers **10**, **11** and **12** for fine control of the temperature and density of the air charge. The ECM could receive signals from sensors such as an engine coolant sensor, a crankshaft position sensor, throttle position sensor, camshaft position sensor, a manifold absolute pressure sensor and a heated oxygen sensor.

Air Bypass Valve (ABV) Control

Outline: To provide optimum air charging pressure for differing engine operations conditions, the ECM **27** can send signals to control air bypass valves **4** and **6**. These valves could be on-off solenoid valves, possibly vacuum operated, or they could be helical solenoids or other type of valve which could open part way or all way in order to re-circulate part or all of the air charge back through the inlets **110** and **8** of compressors **1** and **2** in order to reduce or eliminate entirely the pumping pressure of either compressor **1** or compressor **2**, or both. Similar arrangements of air pressure control could be used for additional stages of air compression if additional stages are used.

The operation could be thus: The ABV valves **4** and **6** can be controlled by signals from the ECM **27** to control the opening angle of valves **4** and **6** to provide the optimum air charging pressures for various engine loads and duty cycles. When ABV **6** is opened partially some of the air pumped through compressor **2** is passed back into the intake **8** of compressor **2** to reduce compression pressure. When ABV **6** is opened fully all of the charge of compressor **2** is passed back through compressor **2**, thus compressor **2** only pumps the charge through with no pressure increase. The system can work the same for valve **4** which could bypass some of the air charge pumped by compressor **1** back into the intake conduit **110** of compressor **1** in order to reduce air charge density.

With this arrangement, combined with the arrangement of ECM **27** control of charge-air cooler bypass system for variable valves **3** and **5**, the temperature, density, pressure and turbulence of the charge-air can be managed to produce the desired power and torque levels and emissions characteristics in the power cylinder of the engine.

Engine conditions that could be monitored by ECM **27** in order to effect proper engine conditions in regard to control of ABV valves **4** and **6** could include a throttle position sensor (or fuel injection activity sensor), intake air temperature sensor at various points, manifold absolute pressure sensor, camshaft position sensor, crankshaft position sensor, exhaust temperature sensor, a heated oxygen sensor and/or other sensory inputs known to be used in internal combustion engines.

The ECM **27** can control both the shutter valves **3** and **5** and the air bypass valves **4** and **6** in order to maintain the optimum air charging density pressure and temperature at all engine operating duty cycles.

Alternate Combustion Systems

Referring now to FIG. **21**, there is shown a schematic transverse view of a pre-combustion chamber **38'**, a combustion chamber **38**, a piston crown **22** and associated fuel inlet **36**, a sparking plug **37**, an air or air/fuel mixture inlet **8'** duct, intake valve **16**, an exhaust duct **18'** an exhaust valve **17** suggested for liquid or gaseous fuel operation for the engines of this invention or for any other internal combustion engine.

There are many choices of systems for compression or spark ignition combustion for the engine of this invention, as shown in FIG. **1** through FIG. **33**. Every fuel from avgas to heavy diesel fuels, including the alcohols and gaseous fuels can be spark ignited (SI) in this engine. One good SI system would be similar to the system shown in FIG. **21** for compressed natural gas, propane, hydrogen, gasoline, alcohols or diesel fuel. In this system, an extremely fuel rich mixture constituting the entire fuel charge is, preferably, injected into the pre-combustion chamber **38'**. The fuel could be injected through fuel duct **36** with or without air blast injection, the air charge, some of which can accompany the fuel charge would be compressed into the pre-combustion chamber **38'** by piston **22** during the compression stroke. Additional air with or without additional fuel, could be introduced into the cylinder proper either on the intake stroke or on the compression stroke through intake conduit **8'**. In either case the second combustion stage in the cylinder proper would be with a lean mixture.

The two-stage combustion system shown in FIG. **21** will operate in this manner:

1. Pre-Combustion (first stage)

Pre-combustion occurs in the pre-combustion chamber **38'** when fuel in an amount much in excess of the amount of oxygen present is injected and ignited (injector not shown). This oxygen deficiency along with the cooler, turbulent charge and lower peak temperatures and pressures greatly

reduces the formation of oxides of nitrogen. The combination of the hot pre-combustion chamber wall and intense turbulence promotes more complete combustion.

2. Post-Combustion (second stage) Post-combustion takes place at lower pressure and relatively low temperature conditions in the space above the piston in the cylinder as the gases expand from the first stage pre-combustion chamber into the cylinder proper. If there is additional fuel in the cylinder proper, the leaner mixture is ignited by this plasma-like blast from the pre-combustion chamber. The low temperature and the admixture of burned gases prevent any further formation of oxides of nitrogen. Excess air, a strong swirling action, and the extended expansion process assure more complete combustion of carbon monoxide, hydrocarbons, and carbon.

The results of the engine of this invention using the pre-combustion chamber **38'** of FIG. **21** are: higher thermal efficiencies due to the greater expansion, along with a cooler exhaust and a lower level of polluting emissions including oxides of nitrogen, and in addition for diesel fuels, lower aromatics and particulates.

Referring now to FIG. **22** there is shown a schematic transverse sectional view of an optional cylinder of the engine of this invention which will convert the 2-stroke engine of FIGS. **8** through **33** to a one-stroke cycle engine and will convert the 4-stroke engines of FIG. **1** through FIG. **7** and FIG. **33** to operate in a 2-stroke cycle.

By building any 2-stroke engine with all power cylinders double acting, the power to weight ratio can be doubled over the basic engine. One end of the cylinder fires and the other end is scavenged on each stroke for a nominal one stroke cycle engine in the engines of FIG. **8** through FIG. **33**. Use of double-acting power cylinders in the 4-stroke engine of FIG. **1** through FIG. **7** and FIG. **33** converts the engine to a 2-stroke engine because one end of the cylinder is scavenged and one end is fired during each crankshaft rotation.

In the design of FIG. **22** needed variation of beam **39** length is accomplished by the beam end forming a scotch yoke **40** and fitting over the wrist pin **41** of the piston.

The double ended piston **22"** can be linked to the end of a vertical beam **39** that pivots at the lower end **42**. A connecting rod **19'** is joined between the midpoint of the beam and the crankshaft **20'**.

Since the crankshaft **20'** itself does no more than transmit torque, its main bearings will be very lightly loaded. As a result little noise will reach the supporting casing. Because of the lever action, the crank (not shown) has half the throw of the piston stroke and can be a stubby, cam-like unit with large, closely spaced pins having substantial overlap for strength.

The compression ratio can be changed by slightly lengthening or shortening the effective length of the beam **39**. This can be done by the lower pivot plate **42** being attached to a block **43** mounted slidably in a fixed block **44** and in which block **43** can be moved slidably by a servo motor **45**. The gear **45***a* rotated by servo motor **45** is much longer than the gear **44***a* on the screw **43***b* which is rotatably attached to block **43** and rotates against threads in block **44**, causing gear **44***a* to slide back and forth on gear **45***a* as block **43** reciprocates in block **44**. Thus as a diesel, it could be started at 20:1 ratio and then shifted to a 13:1 ratio for less friction and stress on parts. This could also be important to allow use of alternate fuels.

Referring now to FIG. **23**: These same advantages hold true for the alternate design (FIG. **23**) in which the pivot **47'** is between the connecting rod **19** and the piston **22"**.

The needed variation of the length of the beam **39** (shown in phantom) connecting the piston **22"** to the connecting rod **19** can be accomplished by forming a scotch yoke **40** on the beam end fitting over the wrist-pin **41** of the piston **22"**, or by placing a double pivoting link **42'** between the pivot **47'** on the fulcrum of beam **39'** with the pivot **42"** being attached to a non-movable part **46** of the engine and the terminal end of beam **39'** being connected to connecting rod **19** by a pin **47**.

Alternately and preferably, for heavy duty engines (marine propulsion, power production, etc.) the power take off of piston **22"** could be with a conventional piston rod **39'** being arranged between piston **22"** and a crosshead **20'** with a connecting rod **19'** between the crosshead **20'** and the crankshaft (not shown).

Double-acting power cylinders when used in the engine of this invention will be especially of importance where great power is desired and cooling water is readily available, e.g., for marine use or for power generation.

These double-ended, double-acting cylinders can be used in all of the designs of this invention.

Referring now to FIG. **24**: There is shown a schematic transverse sectional view of a crankshaft, two connecting rods **19'** and **19"** and a beam **39** showing a means of providing extra burn time of a conventional 2-stroke or 4-stroke engine.

This layout for any engine provides for double the piston **22'** turnaround time of a normal engine during the critical burn period. This is because piston **22'** top dead center (TDC) occurs at bottom dead center (BDC) of the crank **48**. At this point, crankpin motion around piston **22'** top dead center is subtracted from the straightening movement of the connecting rod **19'**, instead of being added to it as in conventional engines. Reversing the usual action slows piston travel around this point, resulting in more complete combustion and further reducing emissions.

The extra burn time provided by the design of FIG. **24** can be important in the engines of this invention and to any Otto or Diesel cycle engine.

Operation of the engine constructed and arranged with the additional burning time would be the same as the other engines of this invention providing high charge density, low compression-ratios with a mean effective pressure higher than conventional engines but with more combustion time than other engines while producing even less polluting emissions.

Since the crankshaft **48** in FIG. **24** itself does no more than transmit torque, its main bearings will be very lightly loaded. As a result little noise will reach the supporting casing. Because of the lever action, the crank can have as little as half the throw of the piston stroke (depending on the point of the fulcrum), and can be a stubby, cam-like unit with large, closely spaced pins having substantial overlap for strength.

This layout also provides for nearly twice the combustion time of a conventional engine during the critical burn period. This is because piston top dead center occurs at bottom dead center (BDC) of the crank.

The Engine 100^{25} of FIG. **25**

Referring now to FIG. **25** of the drawings, there is shown a six cylinder reciprocating internal combustion engine in which all of the cylinders *7a–7f* (only one (7f) of which is shown in a sectional view) and associated pistons *22a–22f* are adapted to operate in a 2-stroke cycle and all cylinders are used for producing power to a common crankshaft **20** via connecting rods *19a–19f*, respectively. A compressor **2** supplies air to scavenging ports **52** by way of optional shut-off valve **33**-M and conduit **32** and to cylinder charge inlet

valve(s) **16** and **16'** by way of conduits **15**. The engine of FIG. **25** is adapted to operate in a 2-stroke cycle so as to produce six power strokes per revolution of the crankshaft **20**. To this end, compressor **1** takes in an air charge which may have been previously subjected to compressing to a higher pressure, via an admission control valves **5** and **6** through an intake conduit **110**, leading from compressor **2** by way of intercooler **10** or bypass conduit **104** and shutter valve **5**. During operation of the engine of FIG. **25**, compressor **2** receives atmospheric air through inlet opening **8**, pre-compresses the air charge into conduit **101** leading to control shutter valve **5** which in response to signals from the ECM **27**, to shutter valve **5** and air bypass valve **6**, will direct the compressed charge through intercooler **10** or through cooler bypass conduits **104** to compressor **1**. The air charge is compressed within compressor **1** by its associated piston **131**, and the compressed air charge is forced through an outlet into a high pressure transfer conduit **109** which leads to control shutter valve **3** which, if open, directs the air through intercooler **11** and **12** to manifolds **13** and **14** or, if closed, through a conduit and air bypass valve **4** which can direct part of the air charge back through inlet conduit **104** of the compressor **1**, or valve **4** if fully closed, directs all of the charge from compressor **1**, in response to signals from the engine control module (ECM) **27**, through the intercoolers **11** and **12** or through the bypass conduit **111/121/122** into manifolds **13** and **14**. Manifolds **13** and **14** are constructed and arranged to distribute the compressed air charge by means of branch conduits **15***a*–**15***f* to inlet valves **16** and **16'** of the cylinder **7***a*, and to the remaining five power cylinders **7***b*–**7***f*. In an alternate embodiment, instead of providing scavenging air through conduit **32'**, scavending air is provided through shut-off valve **49** and conduit **50** and pressure reducing valve **25** to air box **51**, through conduits **125***a*–**125***f* to scavenging ports **52***a*–**52***f*.

The engine **100**[25] shown in FIG. **25** has a camshaft which is arranged to be driven at the same speed as the crankshaft in order to supply one working stroke per revolution for the power pistons. The compressor can be reciprocating, comprised of one or more stages of compression with one or more double-acting cylinders, one is shown, **1** in FIG. **25**. The compressor can be driven by associated connecting rods **19***g* to crankshaft **20** which can have throws of different lengths for different length piston strokes for the air compressor(s) than those of the power pistons. In addition, compressor **1** can be driven by a second crankshaft (not shown) which is driven by a gear meshing with a step-up gear mounted on the common crankshaft. The ancillary rotary compressor, a Lysholm type is shown **2**, can be driven by a V-pulley being rotated by a ribbed V-belt and has a step-up gear arranged between the V-pulley and the compressor drive shaft. The rotary compressor **2** could also have a variable speed, or two speed drive, as in some aircraft engines.

The operation of engine **100**[25] shown in FIG. **25** is thus: Charge-air is inducted into the inlet opening **8** of compressor **2**. From there it is pumped through the compressor **2** where it is directed by shutter valve **5** through the intercooler **10** or through a conduit to air bypass valve **6** where it is directed to the inlet of compressor **1**. The charge is then pumped by compressor **1** through the outlet valve to shutter valve **3** which directs the air charge either through intercoolers **11** and **12**, to manifolds **13** and **14** or into a conduit leading to air bypass valve **4** which can direct a part of the charge back through the inlet of compressor **1** or valve **4** directs the charge wholly or partially to the shutter valve **3** which directs the charge wholly or partially through intercoolers **13** and **14**, or directly to manifolds **13** and **14** which distributes the temperature-adjusted charge-air to cylinder **7** inlet valves **16** and **16'** to each power cylinder of the engine. An off-and-on control valve (not shown) and conduit **32'** directs air to air box **51** and to scavenging ports **52***a*–**52***f* in the bottom of cylinders **7***a*–**7***f*. In the alternates embodiment (shown in phantom in FIG. **25**), the scavenging air is directed through pressure reduction valve **25**, arranged on conduit **50** to provide and adjust scavenging air pressure from compression **1**. Another option to reducing the manifold air pressure for scavenging the cylinders **7***a*–**7***f* is to use the manifold air through conduit **50**, air box **51** and intake ports **52***a*–**52***f* without reducing the pressure from manifolds **13** and **14**. The air would be used at full pressure for scavenging by the scavenging ports **52***a*–**52***f* in FIG. **25** and through inlet port **52"** and exhaust port **52'** in FIG. **30**, which ports **52***a*–**52***f*, **52'** and **52"** would be constructed much smaller than normally done. In this instance, although the scavenging ports were smaller-than-normal, the higher-than-normal pressure scavenging air would be very efficient. Several means of scavenging the cylinders are suggested herein. FIG. **26** illustrates more clearly (although in phantom) the preferred system of supplying low pressure scavenging air. Conduit **32'** and valve **33** (shown in phantom in FIG. **26**) channels air from conduit **110** from compressor **2** to conduit **50** which supplies scavenging air to air box **51**.

The engine control module (ECM) **27** (see, for example, FIG. **26**) controls valves **3**, **4**, **5**, and **6** in order to adjust the pressure, temperature and density of the charge going to the combustion chambers and valve **25**, and can selectively direct a portion, a portion at a reduced pressure of the air charge to scavenging ports **52** and can control valve **53** and valves **49'** to open or close to select the mode of scavenging desired. The ECM can also control a variable-valve-happening control system to adjust the valve opening time and duration of opening time of inlet valves **16** and exhaust valves **17** in relationship to the degree or angle of rotation of crankshaft **20**, in order to adjust the compression ratio of the engine for optimum performance in regard to power, torque, fuel economy, fuel characteristics and to scavenging mode desired.

The preferred operation of the power cylinders shown in FIG. **25** is in this manner:

After blowdown and scavenging of the cylinder **7** has taken place the cylinder is now filled with fresh air, and piston **22** has closed exhaust ports **52** and the piston **22** is in its scavenging-charging stroke and is rising with the exhaust valve **17** still open, at any point, perhaps as early as 120 to 90 degrees before top dead center, the exhaust valve **17** is closed to establish the compression ratio and begin compression, intake valve **16**, **16'** are opened at that time or later in order to produce the desired charge density and weight desired, the compressed air charge or fuel air mixture is injected through intake valve **16**, **16'**, intake valve **16**, **16'** is then closed. Compression of the charge which started at point X, the point where exhaust valve **17** was closed, continues with the compression ratio being established by the cylinder clearance volume remaining at point x, divided by the combustion chamber volume. Fuel can be injected into the secondary compressed air stream being injected into the combustion chamber or injected into a pre-combustion chamber (one is shown in FIG. **21**) or may be injected directly into the combustion chamber. After the closure of intake valve **16**, **16'**, the fuel or more fuel can be injected into the midst of the charge swirl for a stratified charge combustion process, or as in compression ignited engines fuel can be injected directly into the combustion chamber, perhaps

directly onto a glow plug, if suggested pre-combustion chamber is used or not, and can be injected continuously during part of the expansion stroke for a mostly constant pressure combustion process.

The fuel-air mixture is ignited by spark plug, by compression ignition, or by glow plug at the point deemed most efficient, preferably before top dead center of the compression stroke of piston **22**. The expansion stroke of piston **22** takes place as the expanding gases force the piston toward bottom dead center. Near the end of the power stroke, perhaps about 40° before bottom dead center, scavenging ports **52** are uncovered, near the same time exhaust valve(s) **17** in the engine head are opened and a rapid blowdown and scavenging takes place in any of four ways as shown in FIG. **27**, FIG. **28**, FIG. **29** and FIG. **30**. In any case the exhaust valves **17**, **17'** remain open past bottom dead center and for a significant part of the scavenging-charge-adjusting stroke in order to establish the engines compression ratio.

Referring now to FIG. **26**, there is shown a schematic drawing showing an engine similar in structure and operation to the engine **100**[25] of FIG. **25**, having two compressors, but differing in that compressor **1** is depicted as a Lysholm rotary compressor, and compressor **2** is depicted as a turbo compressor, and having one air cooler for the secondary compressor, two air coolers for the primary compressor, dual manifolds, with shutter controls, air bypass controls and conduits for different air paths. Also shown is an engine control module (ECM) **27** which can control charge and scavenging air pressures, density and temperatures in order to effect the desired output and emissions characteristics of the engine. Alternate sources of scavenging air are shown, the preferred one being from conduit **110** by way of conduit **32'**. Air paths are shown by arrows, hollow arrows for uncooled compressed air and solid arrows for cooled denser air. Also shown are air bypass valves (in this case both closed) which, with the shutter valves (one of which is closed and one of which is partly open, the latter to allow cooling of part of the charge), can control the charge temperature, weight and density as required for best engine performance.

Referring now to FIG. **27**, there is shown one system of efficient scavenging of the exhausted products of the engine of FIG. **25**;

Scavenging System A (FIG. **27**)

Blowdown of exhaust occurs at from about 40° before bottom dead center to perhaps 40–50° after bottom dead center, with exhaust valves **17** opening at approximately the same time the ports **52** are opened and remaining open after bottom ports are closed by piston **22**, and closing later causing a low compression ratio.

Scavenging air can be supplied from a manifold with perhaps a pressure-reducing valve **25** on conduit **50** or, preferably scavenging air can be supplied from conduit **32'** from ancillary compressor **2**, (shown in phantom). In this case, bottom ports **52** open shortly before exhaust valves **17** open. Blowdown occurs through bottom ports **52** out through bottom exhaust conduit and valve **53** to main exhaust pipe **18**, at same time or shortly after, exhaust valves **17** open and blowdown of the exhaust occurs both at the top of the cylinder through exhaust valves **53** and **17**, and through exhaust manifold **18'** and pipe **18** to the atmosphere. The exhaust valve **17** then stays open through a significant part of the 2nd or exhaust-charge stroke for additional scavenging, this part by positive displacement. During this scavenging-charging stroke the exhaust valve **17** may be closed at any point after the first 20 percent of piston **22** travel. Now at any point with cylinder **7** being now filled with fresh air, exhaust valve **17** can close and intake valve **16'** open to admit pressurized air which has its temperature adjusted to what is deemed proper. The later in the exhaust-charging stroke the exhaust valve **17** is closed, the lower is the compression ratio of the engine established. If closed early enough the effective compression ratio can be as much as 13 or 16 to 1, if closed later the effective compression ratio can be as low as 2:1. At any point after exhaust valve **17** has closed, and the compression ratio has been established, and before piston **22** has reached top dead center, the air charge, with temperature density and pressure adjusted may be introduced by opening and then closing intake valve **16**. All of the operating parameters suggested would depend on the duty cycle of the engines, e.g., power requirements, efficiency, emissions considerations and the fuel used.

An engine control module (ECM) **27** is shown with connections to the critical control valves of the engine which can be adjusted according the conditions signaled to the ECM **27** from various sensors in the engine.

Referring now to FIG. **28**, there is shown a second system of efficiently scavenging the engine of FIG. **25**;

Scavenging System B (FIG. **28**)

Exhaust blowdown occurs through exhaust valves **17** only, with scavenging air being supplied by compressor **2** by way of conduit **32'**, or alternatively from manifolds **13** and **14** through conduits **50** past control valve **49** and optional pressure control **25** into air box **51** and through scavenging ports **52** in the bottom of the cylinders **7**, up through the cylinder **7**, out exhaust valves **17** and through exhaust pipe **18**, with valve **53** being closed. In this system as piston **22** approaches bottom dead center in the power expansion stroke, ports **52** would be uncovered by piston **22** and as blowdown occurs pressurized air would be injected through all bottom ports **52** and would sweep combusted products through exhaust valves **17** which open perhaps before ports **52** for the exhaust blowdown. The bottom ports can be constructed to open at perhaps 40° before bottom dead center and could close at the same point after piston begins its second stroke. The exhaust valves **17** could remain open after bottom ports **52** are closed to aid in scavenging by positive displacement by piston **22** and to establish the desired compression ratio which is established by the point at which exhaust valves **17** close.

During this scavenging-charging stroke of piston **22** the cylinder **7** being now filled with fresh air, the exhaust valve **17** may be closed at any point after the first **20** percent or so of piston **22** travel. Now at any point exhaust valve **17** can close and intake valve **16** can open to admit highly pressurized air which has its temperature and density adjusted to what is deemed proper. The later in the exhaust-charging stroke the exhaust valve **17** is closed, the lower is the effective compression ratio of the engine established. If closed early enough the effective compression ratio can be as much as 13 or 19 to 1, if closed later the effective compression ratio can be as low as 2:1. All of the operating parameters suggested would depend on the duty cycle of the engines, e.g., power requirements, efficiency and emissions considerations and the fuel used.

An engine control module **27** is suggested for use as shown for controlling the various operating conditions desired and as signaled from the engine's various sensors.

Referring now to FIG. **29**, there is shown a third efficient system of scavenging the engine of FIG. **25**;

Scavenging System C (FIG. **29**)

This scavenging system would be that shut off valves **49'** would be closed, (or valves **25** and **49** could be eliminated),

with bottom ports opened to the atmosphere by valve **53**, one inlet valve **16** leading from manifolds **13** and **14** to cylinder **7** could be opened for a very short period of time by a cam, perhaps by a small lobe on a cam that has a large lobe to open the same valve (as **21**-C in FIG. **11**) at a different crank angle, at the same time ports **52** were uncovered by piston **22** and exhaust valves **17** were opened. The high pressure air would quickly sweep combusted gases through ports **52** and exhaust valves **17**, through their respective exhaust pipes **17** and **17'** to the atmosphere. The intake valve **16** would close quickly, no later than the time exhaust ports **52** closed. The exhaust valve would remain open for further scavenging and for the reduction of the compression ratio of the engine. Alternatively bottom exhaust valves **53** would be closed and as bottom ports **52** were uncovered by piston **22**, exhaust valves **17** would also open earlier for blowdown, air from the airbox **51** supplied by conduit **32** would blow into ports **52** and scavenge the cylinder **7** through exhaust valves **17**.

During this scavenging-charging stroke the exhaust valve **17** is closed at a point after the first 20 percent or so of piston **22** travel. At any point after exhaust valve **17** has closed, the cylinder **7** being now filled with fresh air, and the compression ratio having been established, and before piston **22** has reached top dead center, additional (secondary) air charge, with temperature density and pressure adjusted is introduced when needed by opening a second intake valve **16** and/or by another lobe **21**-C on the same cam (see **21**-C, FIG. **11**) opening the same intake valve again. All of the operating parameters suggested would depend on the duty cycle of the engines, e.g., power requirements, efficiency and emissions considerations and the fuel used. The later in the exhaust-charging stroke the exhaust valve **17** is closed, the lower is the compression ratio of the engine established. If closed early enough the effective compression ratio can be as much as 13:1 or 22:1, if closed later the effective compression ratio can be as low as 2:1.

An engine control module could control all of the conditions required of the engine.

Referring now to FIG. **30**, there is shown a fourth system of efficient scavenging the engine of FIG. **25**.

Scavenging System D (FIG. 30)

In this system exhaust blowdown occurs through the top exhaust valves **17** and through part of the bottom scavenging ports **52'** which open just before bottom dead center, perhaps 40°, and simultaneously with or just after the top exhaust valves open. At the time bottom ports **52'** are opened, or shortly after, exhaust valves **17** are also opened, or, valve **53** leading to bottom exhaust line **18** is already open, and exhaust blowdown occurs over the next, 40° or so after bottom dead center, with scavenging air being injected through at least one of the bottom ports **52"** which has been constructed to receive pressurized air from air box **55** supplied by conduit **32'** or **50** at such a time the ports **52'** are opened by piston **22** and the pressure in cylinder **7** has dropped below the pressure in air-box **55**. After ports **52'** are closed, exhaust valves remain open through a significant part of the second or exhaust-charge stroke of piston **22** for additional scavenging by positive displacement and in order to establish a low compression ratio.

During this scavenging-charging stroke the cylinder **7** being now filled with fresh air, exhaust valve **17** may be closed at any point after the first 20 percent or so of piston **22** travel. Now at any point exhaust valve **17** can close to establish the compression ratio and inlet valve **16** can open to admit a secondary pressurized air charge which has its temperature and pressure adjusted to what is deemed proper. The later in the exhaust-charging stroke the exhaust valve **17** is closed, the lower is the compression ratio of the engine established. If closed early enough the effective compression ratio can be as much as 13:1 or 22:1, if closed later the effective compression ratio can be as low as 2:1. All of the operating parameters suggested would depend on the duty cycle of the engines, e.g., power requirements, efficiency and emissions considerations and the type of fuel used, and can be controlled by an engine control module which receives signals relating conditions in certain engine areas and which are relayed to the ECM **27**.

Referring to FIG. **31**, there is shown a schematic drawing depicting an alternate arrangement in which an electric motor **34** preferably drives the air compressors of an engine similar to that of FIG. **25**.

Referring now to FIG. **32**, there is shown a schematic drawing showing the 2-stroke engine of FIG. **25** and FIG. **26** and having only one compressor **1** for supplying both scavenging and charge-air. Also shown are a shutter valve **3** and an air bypass valve **4**, valves **16** and **17** controlling charge and scavenging air and valves **53** and **53'** for releasing exhaust blowdown out of the cylinder bottom ports **52** through exhaust conduit **18** to the atmosphere. Thus the engine of FIG. **32** can perform all of the feats described for the engine of FIG. **25** and described for the engine of FIG. **25**, FIG. **26**, FIG. **27**, FIG. **28**, FIG. **29**, FIG. **30** and FIG. **32**. Also shown is an engine control module (ECM) **27**, and connections to various valves in order to manage the charge and scavenging air temperature, density, weight and pressure, and the pressure and path of the scavenging air to achieve the desired results from the engine. Arrows show the paths possible for the heated (hollow arrows) air and the cooled (solid arrows), air, and for the charge-air to pass through the air bypass valve **4**, all in order to adjust air pressure, density, weight and temperature for optimum engine performance.

The Engine 100^{33} System of FIG. 33

Referring now to FIG. **33**, there is illustrated a six cylinder internal combustion engine in which part of the cylinders **62** through **65** are used for producing power and two of the cylinders, cylinders **66** and **67**, are used for compressing the air necessary to operate the engine. A supercharger **57**, in this case preferably a Lysholm type, is used to boost the atmospheric pressure air received through air intake **8'**, before the air enters compressor cylinders **66** and **67**. A shutter valve **3'** and air bypass valve **4'** re-circulate the charge-air back through compressor **57** when both are opens to lessen compressor work and reduce charge densities for light-load operation. When air bypass valve **4'** is closed shutter valve **3'** can open or close to send the air charge to the cylinders cooled or uncooled, respectively, in order to manage combustion temperatures and temperatures for optimum performance.

The second stage of compression is transferred from compression cylinders **66** and **67** through conduits **201**, **202** to shutter valve **4"** which, when closed, sends the compressed charge through conduit **204** and intercooler **11** and conduit **205** to the engine manifold **58'** in a cooled condition. If opened, shutter valve **4"** directs the charge away from cooler **11** through conduit **203** and **205** to the power cylinders without cooling.

By having its camshaft arranged to rotate at one-half crankshaft speed, the engine 100^{33} operates in a 4-stroke cycle, with a low compression ratio, an extended expansion

ratio and high mean effective cylinder pressure when operated in a manner just as described herein for the engine of FIG. **3**.

Alternatively, the engine of FIG. **33**, with one or more of its cylinders acting as compressor cylinders and having its camshaft arranged to rotate at crankshaft speed, operates in a 2-stroke cycle with the low compression ratio, high mean effective cylinder pressure and an extended expansion ratio when operated in the manner described herein for the engines of FIG. **8**, FIG. **9** and FIG. **11**.

Still referring to FIG. **33** of the drawings, additional fuel savings can be achieved in any of the engines of the present invention described hereinbefore by use of an economizer constructed as an air compressor retarder brake. For discussion of the disclosed retarder brake, this six-cylinder engine **100**^{33} represents any of the engines of this invention which use externally compressed air (FIG. **1** through FIG. **33**) to either fully supply charge-air or which use it to enhance engine performance. The air retarder brake illustrated has a compressor **57A** operatively connected to the drive shaft of the vehicle (not shown) or geared to the engines crankshaft **20** and stores energy produced during braking or downhill travel which is utilized to supply compressed air to the engine power cylinders via the transfer manifold **58**. Such an economizer is coupled with an air reservoir **59** and during the time in which the economizer reservoir air pressure was sufficiently high for use in the power cylinders of the engine, the engine compressor can be clutchably disengaged or air pumped by the compressor(s) can be bypassed back to the inlet of the compressor(s) so that no compression work would be required of the compressor. A relief valve **60** prevents excess build up of pressure in the air reservoir. A valve **61** (being in this arrangement, a reversible one-way valve) allows air from the reservoir to be transferred to the manifold when the pressure in the reservoir **59** is higher than in the transfer manifold **58**, if the air is needed. In the case of engine constructions having compression cylinders, each compression cylinder of the engine can also be deactivated during this reserve air operation time by shutting off the admission valve so that no net work would be done by the compressor(s) until the manifold-reservoir pressure dropped below operating levels. Several systems of deactivating cylinder valves are described in the art and/or have been mentioned previously.

In an alternate arrangement, the compressor **57A** is eliminated and the air storage tank **59** is used to store excess air compressed by the compressor cylinders of the engine during braking and downhill travel. In this case, the valve **61** is a two-way valve and a blocking valve **70** is placed in the manifold **58** between the compressor cylinder(s) **66**, **67** and the working cylinders **62–65**. During downhill travel or during braking, the blocking valve **70** between compressor and working cylinders is, preferably, closed, power cylinders **62–65** are deactivated, and the two-way valve at **61** is utilized in order to divert the air compressed by the compressor cylinder(s) into storage tank **59**.

When it is desired to operate the engine normally, the blocking valve **70** between the compressor and the expander cylinders is opened and the two-way valve **61** is closed. During reserve air operation, both the blocking valve **70** and the two-way valve **61** are opened. If desired, the compressor cylinder(s) **66**, **67** are deactivated while in the reserve air operation mode, as described earlier. Also, a Jacob brake (a prior art retarder brake) could supply compressed air to the air reservoir tank.

Operating the engine on reserve air supply would improve the mean effective pressure (mep) of the engine for 20 percent improvement in power and efficiency, while reducing polluting emissions, during the time the engine was operating on the reserve air.

This feature would produce additional savings in energy especially in heavy traffic or in hilly country. For example, an engine producing 100 horsepower uses 12.7 pounds of air per minute. Therefore, if energy of braking were stored in the compressed air in the economizer reservoir **59**, a ten or fifteen minute supply of compressed air can be accumulated and stored during stops and down hill travel. When the reservoir pressure drops below the desired level for efficient operation, a solenoid (not shown) is used to reactivate the compression cylinder valves and they (with the supercharger, when needed) will begin to compress the air charge needed by the engine.

Using the air reservoir **59**, the engine needs no compression build-up for starting and as soon as the shaft was rotated far enough to open the intake valve, the compressed air and fuel would enter and be ignited for "instant" starting. Furthermore, the compressed air could be used to rotate the engine for this means of starting by opening intake valves earlier than usual to the expander cylinders to begin rotation and firing as is common in large diesel engines, thus eliminating the need for a starter motor. Alternatively, the compressed air could be used to charge a "hydrostarter" to crank the engine as is common on some heavy-duty diesel engines.

In an alternate, and still preferred embodiment, the reserve air in reservoir is additionally used to "motor" the engine to allow a vehicle such as a bus to pull away from a stop and operate fuelless for 30–60 seconds or more, which is the time that greatest pollution occurs in bus or stop-and-go delivery vehicle operation.

Remotely Compressed Air Embodiments

Referring now to FIG. **34**, there is seen a schematic representation of an engine **100** in accordance with an alternate embodiment of the present invention for externally providing charge-air for marine, locomotive, stationary, or electric power generating engines, or any engine applications of this invention, constant or variable load and speed, which have adequate electric power or waste or "bleed" air available. In FIG. **34**, a remote electric air compressor **35** preferably with one or more intercooled compression stages, preferably supplies temperature conditioned charge-air (both high and low pressure, if needed) for one or more engines of this invention. The charge-air, conditioned in temperature and pressure, is supplied directly to manifolds **13** and **14** by conduit **15**AE from compressor **35**. The engine intake conduit **9** of, for example, FIG. **4**, or low-pressure conduits **32** of other engines of this invention receive air from the atmosphere or alternatively receives low pressure air from a low pressure conduit **15**BE from compressor **35**. **25**

An alternate arrangement, also depicted in FIG. **34**, for providing combustion charge-air for any of the engines **100** of the present invention is to provide charge-air from conduit **15**AR which supplies waste or "bleed" air produced in industrial processes. The air is supplied either at 1 or 2 pressure levels. The lower pressure, if needed, preferably is supplied by dropping the pressure from the main incoming waste air conduit **15**AR with a pressure regulator valve (**25***a* leading to low-pressure conduit **15**BR). The arrangement is similar to the arrangement of conduits **15**-A, **15**-B and valve **25** in, for example, FIG. **5**, with conduit **15**-A representing the supply conduit **15**AR from the waste air supply, and with conduit **15**-B representing conduit **15**BR in FIG. **34**.

The use of remotely compressed air, either waste air or from compressor **35**, eliminates the engines compressors **1**, **2** intercoolers **10**, **11**, **12**, certain conduits and valves **3**, **4**, **5**, **6** of the charge-air supply equipment, providing the air has been conditioned during or after the compression process (and prior to introduction to the manifolds **13**, **14**). Thus, the equipment of the engine **100** of the various embodiments shown throughout the various drawing figures of the engine **100** embodiments of this invention, is preferably eliminated up to those points designated by dashed lines A, B and C throughout the various drawings. The charge-air from either of the aforementioned remote sources is preferably introduced into the engines near the manifolds **13** and **14** and, in the appropriate embodiments, the low air pressure from the remote sources is introduced at conduit **32**, as shown in FIG. **34**.

In the remotely charged engines, the fuel can be carbureted prior to compression, can be throttle-body injected, port-injected, or directly cylinder injected.

Regarding Pollution Control

Referring now to FIG. **2** and FIG. **4**-C there is shown a method of further reducing polluting emissions in any of the engine embodiments of this invention which includes re-burning a portion of the exhausted gases when and if required. In the 4-stroke engines of FIGS. **1**–FIG. **3** and in the 2-stroke engines herein depicted having a single air intake, the exhaust outlet conduit(s) **18** have a shunt conduit **202** (refer to FIG. **2**) leading from a port **206** in the side of exhaust conduit **18** to a port **204** in the side of intake conduit **8**. A proportioning valve **201** is situated at the intake port **204** and is arranged to selectively restrict the flow of fresh air into conduit **8**, while at the same time opening the port **204** to the exhaust conduit to selectively allow entry of exhaust gases to the intake conduit **8**. This valve is variable and mechanically, electrically or vacuum solenoid operated and preferably controlled by an engine control module (ECM) or control **144** in FIG. **35** and FIG. **36**. This allows the re-burning of a portion of the exhausted gases, the amount of percentages thereof being adjusted by the engine control module in response to various sensors, such as an oxygen sensor, placed in strategic positions in the engine. Exhausted gases passing through conduit **202** can be cooled by either optional cooling fins **202***a* or by passing through an optional intercooler (not shown) before reaching the air intake conduit **8**.

With reference to FIG. **4**C, in engines having only one atmospheric intake conduit but having different air paths and conduits, such as conduits **15**-A and **15**-C of FIG. **4**B, a shunt conduit **202'** leading from the exhaust conduit **18** is divided into two shunt conduit portions **203***a*, **203***b*, each with a proportioning valve **209***a*, **209***b* operating so as to selectively admit exhausted gases to either or both of intake valve **16**-B (through conduit **9** and eventually conduit **15**-C) or to intake valve **16**-A (by way of conduit **8** and conduit **15**-A). Each proportioning valve **209**a, **209**b would allow either a portion or none of the exhausted gases to enter its respective port, meanwhile restricting entrance of fresh air if necessary. The exhausted gases can be cooled by optionally arranging fins **202***a* on conduit **202'** and/or **203***a*, **203***b* and **203***c* or by passing the exhaust through an optional intercooler (not shown) before the gases are introduced into the air intake(s) of the engine.

Alternatively, as shown in phantom on FIG. **4**C, one shunt portion **203***a* is diverted (shown as **203***c*) directly to conduit **15**-C and provided there with a proportioning valve **209***c*.

In the engines of FIG. **4** and FIG. **7** having dual atmospheric air intakes **8**, **9**, an arrangement similar to that shown in FIG. **4**C is utilized, it being understood, however, that conduit **8** is open to the atmosphere.

In any engines having dual air intake conduits or dual air paths a portion of exhausted gases can be introduced in any amount necessary, in from one to three points and controlled preferably by an engine control module (ECM) for better management of combustion and emissions characteristics.

This re-burn feature is of particular importance with diesel fuel operation.

Constant Load and Speed Engines

Whereas the preponderance of the foregoing specification describes embodiments and representative engines of the present invention which are optimized for vehicular (marine, truck, bus, automobile, tank, train and plane) duty cycles and describe systems and methods for varying power, torque and speed, the present invention finds useful application for obtaining high power and torque while maintaining optimum fuel economy and low polluting emissions in less complex engines, such as, for example, constant load and speed engines. FIG. **35** and FIG. **36** depict alternate embodiments of the present invention which embodiments are representative of constant load and speed engines (e.g., for electric power generation and in other stationary or industrial engine applications, e.g., for pumps and compressors) outfitted in accordance with the principles of the present invention.

The Engine of **100** System of FIG. **35**

Referring now to FIG. **35** there is shown is a schematic presentation of an engine which represents any of the 4-stroke or 2-stroke engines of the present invention outfitted for constant load and speed operation. The basic components of the engine **100**, such as compressors **1**, **2** and optional intercoolers **10**, **11**, **12** (shown in phantom) and their necessary associated conduits are, preferably, designed for optimum operating parameters having only the basic components. The various controls, shutter valves, air bypass valves and their associated bypass conduits such as those in previously described embodiments, are preferably eliminated in order to reduce weight, cost and complexity of operation. In FIG. **35**, the engine **100** is shown as outfitted with a first ancillary compressor **1** and a second ancillary compressor **2**, optional intercoolers **10**, **11**, **12** (shown in phantom) and interconnecting conduits, all operating as would be understood with reference to the previous detailed descriptions and operating with two stages of precompression of the charge-air, intercooled or adiabatically compressed.

FIG. **35** shows a preferred setup for power generation with any of the engines of this invention. The power output shaft **20** of the engine **100** is coupled schematically by line **140** to power input shaft **20"** of generator **141** which has electric power output lines **142**. As the shaft **20** of the engine **100** rotates the shaft **20"** of generator **141**, the amount of electric power produced by generator **141** is detected by sensor **143** and relayed to control unit and governor **144** which contains various relays and integrated circuits to quantify the power output and to send messages by line **145** to fuel/air control (not shown) on fuel line **148** and throttle **56**, and/or by line **149** to spark control to advance or retard the spark in spark-ignited engines and/or to send messages through lines **146** and **146***b* for engines having fuel injection systems, e.g. for natural gas, gasoline or diesel fuel, or to

fuel/air controls, all in order to control the fuel input, speed and output of engine **100** and hence the output of generator **141**. Control unit **144** also sends signals to control the proportioning valve **201**, shown in FIG. **4** and to proportioning valves **209***a*, **209***b*, **209***c* shown in FIG. **2** to control the amount, if any, of exhaust recirculated by these valves for re-burn in any engine of this invention utilizing this feature. Further explanation of the components and operation with the engine **100** of the present invention is deemed unnecessary as it would be understood by those skilled in the art having reference to the present disclosure.

The optional intercoolers **10**, **11**, **12** (shown in phantom) are preferably used for gaseous or gasoline fueled engines and are preferably eliminated or reduced in number or cooling capacity in the compression-ignited engine, this being made possible by low peak pressures and temperatures in the engines of this invention.

Referring now to FIG. **36** there is shown an engine illustrated as a 2-stroke engine but representing any of the engines of the present invention, 2-stroke or 4-stroke, which is coupled schematically by line **140** with an electric generator **141**. The engine and arrangements are similar in structure and operation as that shown and described for the engine of FIG. **35** with the exception that engine of FIG. **36**, operating as either 2-stroke or 4-stroke cycle engine **100**, has only a single stage of pre-compression, optionally intercooled by intercoolers **11**, **12** (shown in phantom), of the charge air. As with the engine of FIG. **35**, intercoolers **11**, **12** are preferably eliminated or reduced in cooling capacity in compression-ignited versions of the engine **100** of this invention. Also, as with the engine **100** of FIG. **35**, the governor, and other controls and the operation of the engine and generator would be understood by those skilled in the art having reference to the present disclosure.

It will be seen by the foregoing description of a plurality of embodiments of the present invention, that the advantages sought from the present invention are common to all embodiments.

While there have been herein described approved embodiments of this invention, it will be understood that many and various changes and modifications in form, arrangement of parts and details of construction thereof may be made without departing from the spirit of the invention and that all such changes and modifications as fall within the scope of the appended claims are contemplated as a part of this invention.

While the embodiments of the present invention which have been disclosed herein are the preferred forms, other embodiments of the present invention will suggest themselves to persons skilled in the art in view of this disclosure. Therefore, it will be understood that variations and modifications can be effected within the spirit and scope of the invention and that the scope of the present invention should only be limited by the claims below. Furthermore, the equivalents of all means-or-step-plus-function elements in the claims below are intended to include any structure, material, or acts for performing the function as specifically claimed and as would be understood by persons skilled in the art of this disclosure, without suggesting that any of the structure, material, or acts are more obvious by virtue of their association with other elements.

What is claimed is:

1. An internal combustion engine, comprising:

an engine block defining at least one cylinder therein, two cylinder inlet ports communicating between said cylinder and a source of air, and an exhaust port through which exhausted gases are expelled from said cylinder;

a piston movably mounted within said cylinder;

an intake valve selectively occluding each inlet port;

an exhaust valve selectively occluding said exhaust port;

at least one compressor in fluid communication via a conduit between said source of air and at least one cylinder inlet port;

at least one air cooler interconnected between said compressor and said inlet port; and

means for directing low pressure air to one of said inlet ports during an intake stroke of the piston and for directing air highly compressed by said compressor to the other of said inlet ports during a compression stroke of said piston, wherein one of said intake valves occupies an open position only while the other of said intake valves occupies a closed position.

2. The engine of claim **1**, wherein said at least one compressor includes a first compressor, and further comprising:

a second compressor in fluid communication between said first compressor and said inlet port with which said compressor is in communication,

whereby at least part of the intake air is selectively compressed a second time prior to entering the cylinder;

wherein said means for controlling includes means for controlling the operation of said second compressor.

3. The engine of claim **1**, wherein means are provided to minimize backflow of the charge during the closure of the higher pressure intake valve.

4. The engine of claim **3** wherein the means to minimize backflow is a one-way valve located between the intake valve and the cylinder.

5. The engine of claim **1**, wherein the compression stroke results in compressing of air within the cylinder, with means for managing air charge volumes to provide a compression ratio lower than the expansion ratio of the engine.

6. The engine of claim **1**, further comprising means for controlling operation of said compressor and said intake valves and for controlling one or more air charge characteristics selected from the group consisting of turbulence, density, pressure, temperature, and the mean and peak pressure.

7. The internal combustion engine of claim **1**, further comprising a means for directing low pressure air to one of said inlet ports during an intake stroke of the piston and for directing air highly compressed by said compressor to the other of said inlet ports during a compression stroke of said piston.

8. The internal combustion engine of claim **1**, further comprising a means for directing low pressure air to one of said inlet ports during an intake stroke of the piston and for directing air highly compressed by said compressor to the other of said inlet ports during a compression stroke of said piston and after compression has begun.

9. In an internal combustion engine having a crankshaft driven by at least one piston moving through at least a compression stroke and an intake stroke aided by combustion taking place within a cylinder, wherein the compression stroke results in the compressing of air within the cylinder, the improvement thereto comprising:

an external compression stage in which a second air charge is compressed outside the cylinder;

a delivery conduit linking said external compression stage to the cylinders, with an intercooler through which said secondary air charge is selectively directed from said external compression stage;

two cylinder intake ports with an intake valve in each port; and

means for directing low pressure air to one of said intake ports during the intake stroke of the piston and for directing highly compressed air to the other of said intake ports during the compression stroke of the piston, wherein one of said intake valves occupies an open position only during a compression stroke of said piston.

10. The engine of claim **9**, wherein the compression stroke results in compressing of air within the cylinder, with means for managing air charge volumes to provide a compression ratio lower than the expansion ratio of the engine.

11. In an internal combustion engine having a crankshaft driven by at least one piston moving through at least a compression stroke and an intake stroke aided by combustion taking place within a cylinder, wherein the compression stroke results in the compressing of air within the cylinder, the improvement thereto comprising:

an external compression stage in which a secondary air charge is compressed outside the cylinder;

delivery conduit linking said external compression stage to the cylinder, with an intercooler through which said secondary air charge is selectively directed from said external compression stage;

two cylinder intake ports with an intake valve in each port;

means for directing low pressure air to one of said intake ports during the intake stroke of the piston and for directing highly compressed air to the other of said intake ports during the compression stroke of the piston; and

a second external compressor in which said low pressure air charge is lightly compressed outside the cylinder and conduit directing said air charge from said second external compressor through an air cooler to a low pressure port of the cylinder during the intake stroke.

12. An internal combustion engine, comprising:

an engine block defining at least one cylinder therein, first and second inlet ports communicating between said cylinder and a source of air, and an exhaust port through which air is exhausted from said cylinder;

a piston movably mounted within said cylinder;

an intake valve selectively occluding each said intake port;

an exhaust valve selectively occluding said exhaust port;

means for directing air at a first pressure to said first inlet port and for directing air at a second pressure, different from said first pressure, to said second inlet port during a compression stroke of the piston, wherein one of said intake valves occupies an open position only while the other of said intake valves occupies a closed position.

13. The engine of claim **12**, wherein the compression stroke results in compressing of air within the cylinder, with means for managing air charge volumes to provide a compression ratio lower than the expansion ratio of the engine.

14. An internal combustion engine, comprising:

an engine block defining at least one cylinder therein, first and second inlet ports communicating between said cylinder and a source of air, and an exhaust port through which air is exhausted from said cylinder;

a piston movably mounted within said cylinder;

an intake valve selectively occluding each said intake port;

an exhaust valve selectively occluding said exhaust port; and

a first compressor directing air at a first pressure to said first inlet port and a second compressor directing air at a second pressure, different from said first pressure, to said second inlet port during a compression stroke of said piston.

15. The engine of claim **14**, wherein the compression stroke results in compressing of air within the cylinder, with means for managing air charge volumes to provide a compression ratio lower than the expansion ratio of the engine.

16. An internal combustion engine, comprising:

an engine block defining at least one cylinder therein, two cylinder inlet ports communicating between said cylinder and a source of air, and an exhaust port through which exhausted gases are expelled through said cylinder;

a piston movably mounted within said cylinder;

an intake valve selectively occluding each inlet port;

an exhaust valve selectively occluding said exhaust port;

at least one compressor in fluid communication via a conduit between said source of air and at least one cylinder inlet port;

at least one air cooler interconnected between said compressor and said inlet port;

means for directing low pressure air to one of said inlet ports during an intake stroke of the piston and for directing air highly compressed by said compressor to the other of said inlet ports during a compression stroke of said piston; and

a second external compressor in which said low pressure air charge is lightly compressed outside the cylinder and conduit directing said air charge from said second external compressor through an air cooler to a low pressure port of the cylinder during the intake stroke.

17. An internal combustion engine, comprising:

an engine block defining a least one cylinder therein, a first inlet port through which air is introduced to said cylinder, a second inlet port through which air is introduced to said cylinder, and an exhaust port through which exhausted gases are expelled from said cylinder;

a piston movably mounted within said cylinder, said piston moving through at least one intake stroke and one compression stroke;

a first intake valve selectively opening and closing said first inlet port, said first intake valve opening said first inlet port during at least a portion of said intake stroke;

a second intake valve selectively opening and closing said second inlet port, said second intake valve opening said second inlet port during at least a portion of said compression stroke;

an exhaust valve selectively opening and closing said exhaust port;

first conduit communicating said first inlet port to air at a first pressure; and

at least one compressor in fluid communication via a second conduit with said second inlet port, said compressor generating compressed air at least while said second intake valve is open, said second pressure being greater than said first pressure,

whereby air at at least the first pressure is introduced to the cylinder during the intake stroke and air at at least the second pressure is introduced into the cylinder during the compression stroke.

18. An internal combustion engine, comprising:

an engine block defining at least one cylinder therein, two cylinder inlet ports communicating between said cyl-

inder and a source of air, and an exhaust port through which exhausted gases are expelled through said cylinder;

a piston movably mounted within said cylinder;

a first intake salve cooperating with a first of said inlet ports and selectively movable between a closed position and an open position;

a second intake valve cooperating with a second of said inlet ports and selectively movable between a closed position and an open position;

an exhaust valve cooperating with said exhaust port;

at least one compressor in fluid communication via a conduit between said source of air and at least said first of said inlet ports; and

wherein said first intake valve occupies its said open position only while said second intake valve occupies its closed position.

19. The internal combustion engine of claim **18**, further comprising means for directing low pressure air to said second of said inlet ports during an intake stroke of the piston and for directing air highly compressed by said compressor to said first of said inlet ports during a compression stroke of said piston.

20. The internal combustion engine of claim **18**, further comprising means for directing low pressure air to one of said inlet ports daring an intake stroke of the piston and for directing air highly compressed by said compressor to the other of said inlet ports during a compression stroke of said piston and after compression has began.

21. An internal combustion engine, comprising:

an engine block defining at least one cylinder therein, two cylinder inlet ports communicating between said cylinder and a source of air, and an exhaust port through which exhausted gases are expelled through said cylinder;

a piston movably mounted within said cylinder;

a first intake valve cooperating with a first of said inlet ports and selectively movable between a closed position and an open position;

a second intake valve cooperating with a second of said inlet ports and selectively movable between a closed position and an open position;

an exhaust valve cooperating with said exhaust port;

at least one compressor in fluid communication via a conduit between said source of air and at least said first of said inlet ports; and

wherein said first intake valve occupies its said open position only during a compression stroke of said piston.

22. The internal combustion engine of claim **21**, further comprising a means for directing low pressure air to said second of said inlet ports during an intake stroke of the piston and for directing air highly compressed by said compressor to said first of said inlet ports during a compression stroke of said piston.

23. The internal combustion engine of claim **21**, further comprising a means for directing low pressure air to one of said inlet ports during an intake stroke of the piston and for directing air highly compressed by said compressor to the other of said inlet ports during a compression stroke of said piston and after compression has begun.

24. An internal combustion engine, comprising:

an engine block defining at least one cylinder therein, two cylinder inlet ports communicating between said cylinder and a source of air, and an exhaust port through which exhausted gases are expelled through said cylinder;

a piston movably mounted within said cylinder;

a first intake salve cooperating with a first of said inlet ports and selectively movable between a closed position and an open position;

a second intake valve cooperating with a second of said inlet ports and selectively movable between a closed position and an open position;

an exhaust valve cooperating with said exhaust port;

at least one compressor in fluid communication via a conduit between said source of air and at least said first of said inlet ports; and

wherein said first intake valve occupies its said open position only after compression has begun during a compression stroke of said piston.

25. The internal combustion engine of claim **24**, further comprising a means for directing low pressure air to said second of said inlet ports during an intake stroke of the piston and for directing air highly compressed by said compressor to said first of said inlet ports during a compression stroke of said piston.

26. The internal combustion engine of claim **24**, further comprising a means for directing low pressure air to one of said inlet ports during an intake stroke of the piston and for directing air highly compressed by said compressor to the other of said inlet ports during a compression stroke of said piston and after compression has begun.

* * * * *

1:05-cv-01394-MMM-JAG # 28-18 Page 1 of 24
E-FILED
Thursday, 09 February, 2006 05:28:48 PM
Clerk, U.S. District Court, ILCD

US006951211B2

(12) **United States Patent**
Bryant

(10) **Patent No.: US 6,951,211 B2**
(45) **Date of Patent: Oct. 4, 2005**

(54) **COLD AIR SUPER-CHARGED INTERNAL COMBUSTION ENGINE, WORKING CYCLE AND METHOD**

(76) Inventor: **Clyde C. Bryant**, 410 Trammell Dr., Alpharetta, GA (US) 30004

(*) Notice: Subject to any disclaimer, the term of this patent is extended or adjusted under 35 U.S.C. 154(b) by 0 days.

(21) Appl. No.: **10/385,588**

(22) Filed: **Mar. 11, 2003**

(65) **Prior Publication Data**

US 2004/0123849 A1 Jul. 1, 2004

Related U.S. Application Data

(63) Continuation-in-part of application No. 10/206,847, filed on Jul. 26, 2002, now abandoned, which is a continuation-in-part of application No. 09/632,739, filed on Aug. 4, 2000, which is a continuation of application No. 08/863,103, filed on May 23, 1997, now Pat. No. 6,279,550, which is a continuation-in-part of application No. 08/841,488, filed on Apr. 23, 1997, now abandoned, which is a continuation-in-part of application No. 09/757,772, filed on Jan. 9, 2001, now abandoned, said application No. 10/385,588, is a continuation-in-part of application No. 10/029,224, filed on Dec. 20, 2001, now abandoned.

(60) Provisional application No. 60/022,102, filed on Jul. 17, 1996, provisional application No. 60/023,460, filed on Aug. 6, 1996, provisional application No. 60/029,260, filed on Oct. 25, 1996, provisional application No. 60/040,630, filed on Mar. 7, 1997, provisional application No. 60/175,597, filed on Jan. 11, 2000, provisional application No. 60/259,727, filed on Jan. 4, 2001, provisional application No. 60/278,030, filed on Mar. 22, 2001, provisional application No. 60/284,711, filed on Apr. 18, 2001, provisional application No. 60/296,620, filed on Jun. 7, 2001, provisional application No. 60/297,663, filed on Jun. 12, 2001, provisional application No. 60/340,728, filed on Oct. 22, 2001, provisional application No. 60/340,609, filed on Dec. 14, 2001, and provisional application No. 60/374,392, filed on Apr. 22, 2002.

(51) **Int. Cl.**[7] **F02B 33/00**

(52) **U.S. Cl.** **123/559.1**; 123/316; 123/432

(58) **Field of Search** 123/559.1, 564, 123/316, 432, 213, 216

(56) **References Cited**

U.S. PATENT DOCUMENTS

1,562,692	A	11/1925	De Rochefort-Lucay	123/432
1,825,817	A	10/1931	Patterson	123/559.1
1,963,780	A	6/1934	Du Bois	60/605.1
2,202,227	A	5/1940	Noland	

(Continued)

FOREIGN PATENT DOCUMENTS

DE	29 30 124	A1	2/1981

(Continued)

OTHER PUBLICATIONS

Diesel Engine Reference Book—LCR Lilly—Butterworth & Co.—1984.

(Continued)

Primary Examiner—Michael Koczo, Jr.
(74) *Attorney, Agent, or Firm*—Womble Carlyle Sandridge & Rice PLLC

(57) **ABSTRACT**

Working cycle for internal combustion engines, with methods and apparatuses for managing combustion charge density, temperature, pressures and turbulence (among other characteristics). At least one embodiment describes a supercharged internal combustion engine in which a supercharging portion of air is compressed, cooled and injected late in the compression process. A sub-normal compression ratio or low "effective" compression ratio initial air charge is received by a cylinder/compression chamber on the engine intake process, which during compression produces only a fraction of heat-of-compression as that produced by a conventional engine. During compression process, dense, cooled supercharging air charge is injected, adding density and turbulence above that of conventional engines with low "effective" compression ratio for this portion of air charge also. Compression continues and near piston top dead center, the air charge being mixed with fuel is ignited for power pulse followed by scavenging.

28 Claims, 37 Drawing Sheets

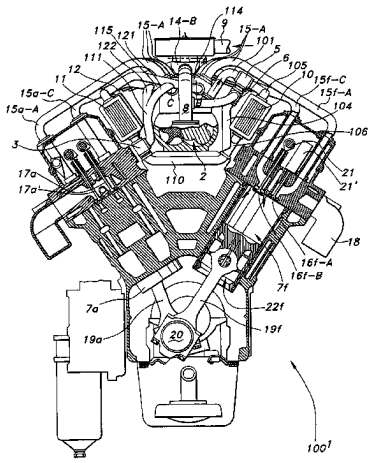

U.S. PATENT DOCUMENTS

2,292,233	A		8/1942	Lysholm 123/316
2,344,993	A		3/1944	Lysholm 123/105
2,391,176	A	*	12/1945	Mallory 123/432
2,453,377	A		11/1948	Lozivit 123/432
2,522,456	A		9/1950	Mallory 123/432
2,594,845	A		4/1952	Baumann 60/13
2,644,436	A		7/1953	Berlyn
2,670,595	A		3/1954	Miller 60/13
2,773,490	A		12/1956	Miller 123/316
3,015,934	A		1/1962	Miller 123/316
3,186,388	A		6/1965	Bricout 60/605.1
3,250,068	A		5/1966	Vulliamy
3,257,797	A		6/1966	Lieberherr
3,266,234	A		8/1966	Cook 60/605.1
3,405,692	A		10/1968	Hanns-Dieter
3,964,451	A		6/1976	Goto 123/432
4,020,809	A		5/1977	Kern et al.
4,033,304	A		7/1977	Luria
4,050,435	A		9/1977	Fuller, Jr. et al.
4,132,213	A		1/1979	Weaver
4,149,493	A		4/1979	Franke 123/432
4,161,166	A		7/1979	Roznovsky
4,180,035	A		12/1979	Saiki et al.
4,206,728	A		6/1980	Trenne
4,315,488	A		2/1982	Tadokoro et al.
4,344,289	A		8/1982	Curiel et al.
4,387,672	A		6/1983	Crocker
4,423,709	A		1/1984	Arrieta
4,424,790	A		1/1984	Curtil
4,474,008	A		10/1984	Sakurai et al.
4,520,774	A		6/1985	Sitter
4,527,534	A		7/1985	Sakurai et al. 123/432
4,554,890	A		11/1985	Okimoto et al. 123/432
4,561,253	A		12/1985	Curtil
4,565,167	A		1/1986	Bryant 123/70
4,566,422	A		1/1986	Tadokoro et al. 123/432
4,572,114	A		2/1986	Sickler
4,633,844	A		1/1987	Okimoto 123/432
4,643,049	A		2/1987	Nishikawa et al.
4,730,457	A		3/1988	Yamada et al. 60/609
4,759,188	A		7/1988	Schatz 60/605.1
4,815,423	A		3/1989	Holmer
4,833,971	A		5/1989	Kubik
4,841,936	A		6/1989	Takahashi
4,903,488	A		2/1990	Shibata 60/609
4,934,344	A		6/1990	Perr
4,959,961	A		10/1990	Hiereth 60/612
5,000,145	A		3/1991	Quenneville
5,012,778	A		5/1991	Pitzi
5,119,795	A		6/1992	Goto et al. 123/563
5,191,867	A		3/1993	Glassey
5,251,595	A		10/1993	Wei-Min
5,255,641	A		10/1993	Schechter
5,327,856	A		7/1994	Schroeder et al.
5,327,858	A		7/1994	Hausknecht
5,333,456	A		8/1994	Bollinger
5,335,633	A		8/1994	Thien
5,363,816	A		11/1994	Yorita et al.
5,379,743	A		1/1995	Stokes et al.
5,408,979	A		4/1995	Backlund et al.
5,445,128	A		8/1995	Letang et al.
5,456,222	A		10/1995	Schechter
5,479,890	A		1/1996	Hu et al.
5,515,818	A		5/1996	Born
5,520,161	A		5/1996	Klopp
5,546,914	A		8/1996	Scheinert
5,549,095	A		8/1996	Goto et al.
5,564,386	A		10/1996	Korte et al.
5,586,526	A		12/1996	Lindquist
5,586,531	A		12/1996	Vittorio
5,611,204	A		3/1997	Radovanovic et al.
5,615,646	A		4/1997	Feucht
5,619,965	A		4/1997	Cosma et al.
5,645,030	A		7/1997	Letsche
5,649,516	A		7/1997	Laveran 123/563
5,680,841	A		10/1997	Hu
5,682,854	A		11/1997	Ozawa
5,713,331	A		2/1998	Eisenbacher et al.
5,718,199	A		2/1998	Hu et al.
5,724,939	A		3/1998	Faletti et al.
5,732,678	A		3/1998	Lindquist et al.
5,778,674	A		7/1998	Kimura
5,787,859	A		8/1998	Meistrick et al.
5,809,964	A		9/1998	Meistrick et al.
5,813,231	A		9/1998	Faletti et al.
5,816,216	A		10/1998	Egashira et al.
5,829,397	A		11/1998	Vorih et al.
5,839,400	A		11/1998	Vattaneo et al.
5,839,453	A		11/1998	Hu
5,937,807	A		8/1999	Peters et al.
5,967,115	A		10/1999	Konopka et al.
5,970,929	A		10/1999	Tacquet
6,000,374	A		12/1999	Cosma et al.
6,003,316	A		12/1999	Baert et al.
6,006,706	A		12/1999	Kanzaki
6,012,424	A		1/2000	Meistrick
6,020,651	A		2/2000	Nakamura et al.
6,026,786	A		2/2000	Groff et al.
6,035,639	A		3/2000	Kolmanovsky et al.
6,035,640	A		3/2000	Kolmanovsky et al.
6,067,800	A		5/2000	Kolmanovsky et al.
6,067,946	A		5/2000	Bunker et al.
6,076,353	A		6/2000	Freudenberg et al.
6,082,328	A		7/2000	Meistrick et al.
6,095,127	A		8/2000	Kolmanovsky et al.
6,101,998	A		8/2000	Tamura et al.
6,128,902	A		10/2000	Kolmanovsky et al.
6,135,073	A		10/2000	Feucht et al.
6,148,778	A		11/2000	Sturman
6,170,441	B1		1/2001	Haldeman et al.
6,178,749	B1		1/2001	Kolmanovsky et al.
6,189,504	B1		2/2001	Israel et al.
6,209,516	B1		4/2001	Yamashita
6,223,846	B1		5/2001	Schechter
6,234,123	B1		5/2001	Iiyama et al.
6,237,551	B1		5/2001	Macor et al.
6,244,257	B1		6/2001	Hu
6,267,107	B1		7/2001	Ward
6,273,076	B1		8/2001	Beck et al.
6,279,550	B1		8/2001	Bryant
6,301,887	B1		10/2001	Gorel et al.
6,301,889	B1		10/2001	Gladden et al.
6,302,076	B1		10/2001	Bredy
6,439,195	B1		8/2002	Warner
6,467,452	B1		10/2002	Duffy et al.
6,571,765	B2		6/2003	Kuboshima et al.
6,575,129	B2		6/2003	Almkvist et al.
6,651,618	B1		11/2003	Coleman et al. 123/305
6,688,280	B2		2/2004	Weber et al. 123/305
6,722,349	B2		4/2004	Leman et al.
6,732,685	B2		5/2004	Leman
2001/0002379	A1		5/2001	Schechter
2001/0023671	A1		9/2001	Vorih
2002/0157623	A1		10/2002	Turner et al.
2003/0145810	A1		8/2003	Leman et al.
2004/0020204	A1		2/2004	Callas et al. 60/612
2004/0118118	A1		6/2004	Weber et al.
2004/0206331	A1		10/2004	Leman

FOREIGN PATENT DOCUMENTS

DE	31 24668	A1	1/1983

DE	39 03 474	A1	2/1988
DE	39 03 474	A1	9/1989
DE	FR 43 08 354	A1	9/1993
DE	44 40 289	A1	5/1996
DE	44 43 169	A1	6/1996
EP	0 275 244		1/1988
EP	0 961 018	A1	12/1999
EP	1 022 446	A1	7/2000
FR	2 583 108	A2	12/1986
GB	1331348		9/1973
JP	355153820	A	12/1982
JP	58-62314	*	4/1983
JP	358062314	A	4/1983
JP	58-180 722		10/1983
JP	58-211 526		12/1983
JP	59 060034	A	4/1984
JP	359188031	A	10/1984
JP	60090926		5/1985
JP	61070130		4/1986
JP	63055324		3/1988
JP	363057822	A	3/1988
JP	63198728		8/1988
JP	363268926	A	11/1988
JP	363268927	A	11/1988
JP	1024414		1/1989
JP	401083820	A	3/1989
JP	05106415	A2	4/1993
JP	200120457		4/2000
JP	2000 120457		4/2000
JP	2000-145484		5/2000
JP	2000145484		5/2000
JP	2003262137	A	9/2003
SU	248375		7/1969
SU	1247573		7/1986
WO	WO 90/15917		12/1990
WO	WO 98/02653		1/1998
WO	WO 01/20150		3/2001
WO	WO 01/46574		6/2001

OTHER PUBLICATIONS

SAE Technical Paper Series—A Review & Classification of Variable Valve Timing Mechanisms—Dresner et al.—Feb. 27, 1989–Mar. 3, 1989—pp. 1–14.

SAE Technical Paper Series—A Review of Variable Valve Timing Benefits & Modes of Operation—Dresner et al.—Aug. 7, 1989–Aug. 10, 1989—pp. 1–9.

Jacobs Vehicle Systems, VVA—Variable Actuation Systems—pp. 1–2.

Paxman Diesel Engines since 1934, pp. 1 and 9, Aug. 23, 2004.

ALSTOM Engines Paxman VP185—pp. 1–6.

The 8th Annual Automobile & Engine Technology Colloquium in Aachen—An Overview—Dipl.–Ing. Jörg Ballauf—pp. 1–5, Oct., 1999.

Sturman Industries—Hydraulic Valve Actuation—Sep. 5, 2004.

The Internal–Combustion Engine in Theory & Practice—vol. 1: Thermodynamics, Fluid Flow, Performance—Second Edition, Revised—Charles Fayette Taylor—1985.

The Internal–Combustion Engine in Theory & Practice—vol. 2: Combustion, Fuels, Materials, Design—Revised Edition—Charles Fayette Taylor—1985.

http://www.mazda.com.au/corpora/209.html, Oct. 16, 2001, p. 1–6.

Challen et al., "Diesel Engine Reference Book, Second Edition," SAE International, 1999, pp. 75, 81, 84, 146, and 263–305.

Edwards et al, "The Potential of a Combined Miller Cycle & Internal EGR Engine for Future Heavy Duty Truck Apps" SAE Int'l Congress & Expo, Feb. 23–Feb. 26, 1998.

Yorihiro Fukuzawa et al., "Development of High Efficiency Miller Cycle Gas Engine", Mitsubishi Heavy Industries, Ltd., Technical Review, vol. 38, No. 3, Oct. 2001, pp. 146–150.

Pending U.S. Appl. No. 10/992,198; Title: Combustion Engine Including Fluidically–Driven Engine Valve Actuator—Filing Date: Nov. 19, 2004.

Pending U.S. App. No. 10/992,137: Title: Combustion Engine Including Fluidically–Controlled Engine Valve Actuator—Filing Date: Nov. 19, 2004.

Pending U.S. Appl. No. 10/933,300; Title: Air & Fuel Supply System for Combustion Engine—Filing Date: Nov. 19, 2004.

Pending U.S. Appl. No. 10/992,074: Title: Combustion Engine Including Cam Phase–Shifting—Filing Date: Nov. 19, 2004.

Pending U.S. Appl. No. 10/992,866: Title: Air & Fuel Supply System for Combustion Engine With Particulate Trap—Filing Date: Nov. 19, 2004.

Pending U.S. Appl. No. 10/992,857: Title: Air & Fuel Supply System for Combustion Engine Operating at Optimum Engine Speed—Filing Date: Nov. 19, 2004.

Pending U.S. Appl. No. 10/992,897: Title: Air & Fuel Supply System for Combustion Engine—Filing Date: Nov. 19, 2004.

Pending U.S. Appl. No. 10/933,065; Title: Air & Fuel Supply System for Combustion Engine Operating in HCCI Mode—Filing Date: Nov. 19, 2004.

Pending U.S. Appl. No. 10/992,070: Title: Combustion Engine Including Exhaust Purification with On–Board Ammonia Production—Filing Date Nov. 19, 2004.

Pending U.S. Appl. No. 10/992,071; Title: Combustion Engine Including Engine Valve Actuation System—Filing Date Nov. 19, 2004.

Pending U.S. Appl. No. 10/992,069; Title: Air & Fuel Supply System for Combustion Engine—Filing Date Nov. 19, 2004.

Pending U.S. Appl. No. 10/992,125; Title: Air & Fuel Supply System for A Combustion Engine—Filing Date Nov. 19, 2004.

NOX Control in Heavy–Duty Diesel Engines—What is the Limit?—Dickey, Ryan III & Matheaus—International Congress & Exposition—Feb. 23–26, 1998—pp. 1–14.

http://www.mazda.com.au/corpora/209.html, Oct. 16, 2001, pp. 1–6.

Yorihiro Fukuzawa et al., "Development of High Efficiency Miller Cycle Gas Engine", Mitsubishi Heavy Industries, Ltd., Technical Review, vol. 38, No. 3, Oct., 2001, pp. 146–150.

* cited by examiner

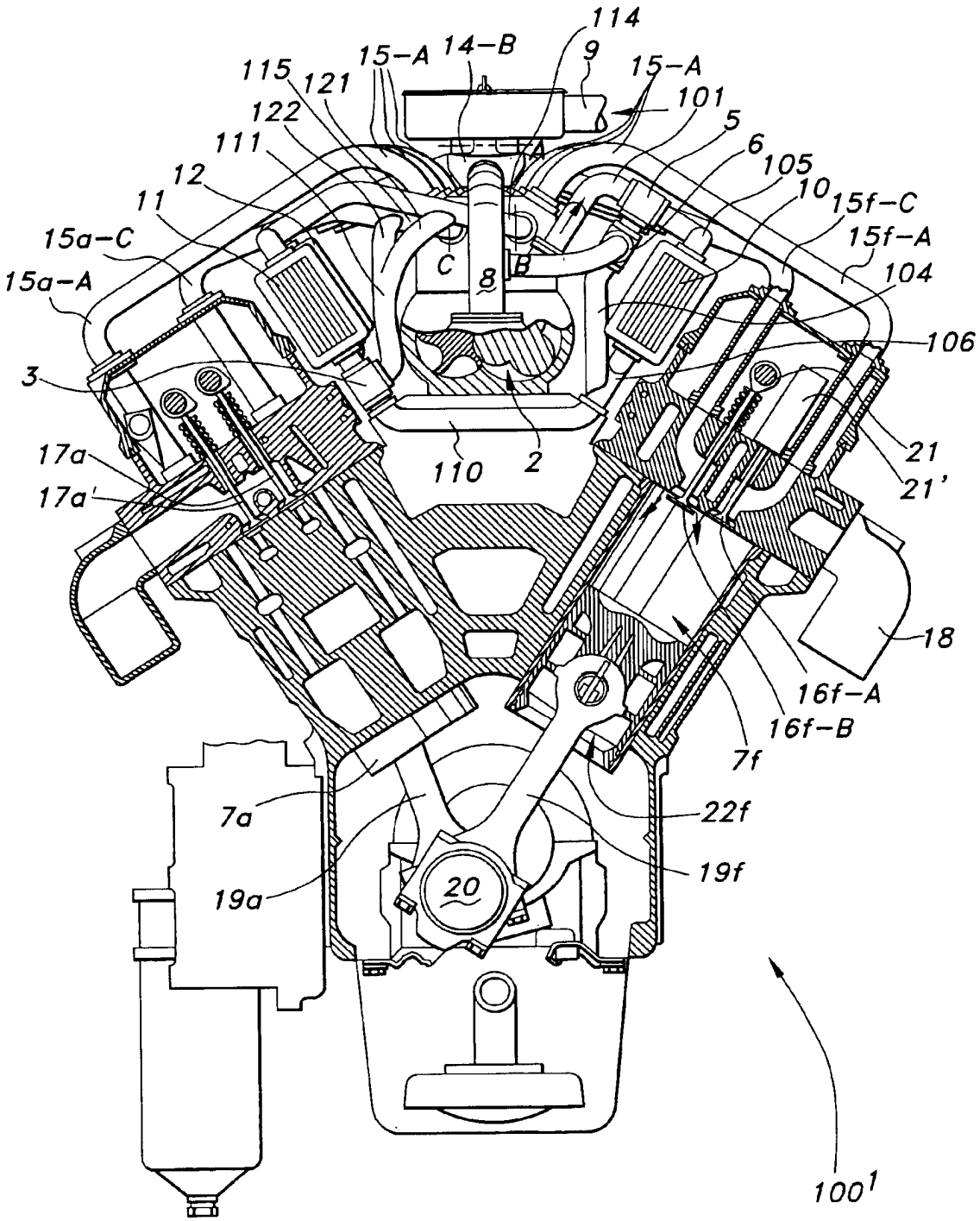
114
9
15-A
14-B
15-A
115
121
101
122
5
111
6
105
12
10
11
15f-C
15a-C
15f-A
15a-A
C
8
B
104
106
3
2
110
21
17a
21'
17a'
18
16f-A
16f-B
7f
7a
22f
19f
19a
20
100'

FIG 1

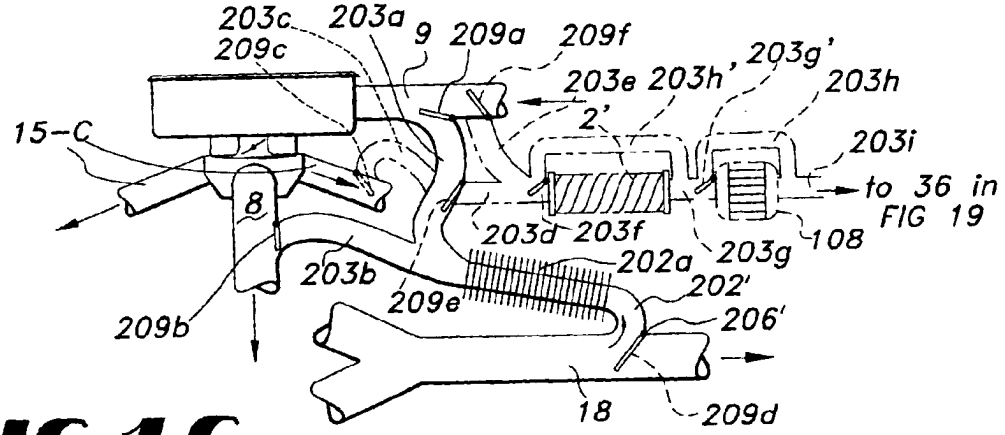
203c
203a
9
209a
209f
209c
203e
203h'
203g'
203h
2'
15-C
203i
8
to 36 in FIG 19
203d
203f
108
203g
202a
202'
203b
209e
206'
209b
18
209d

FIG 1C

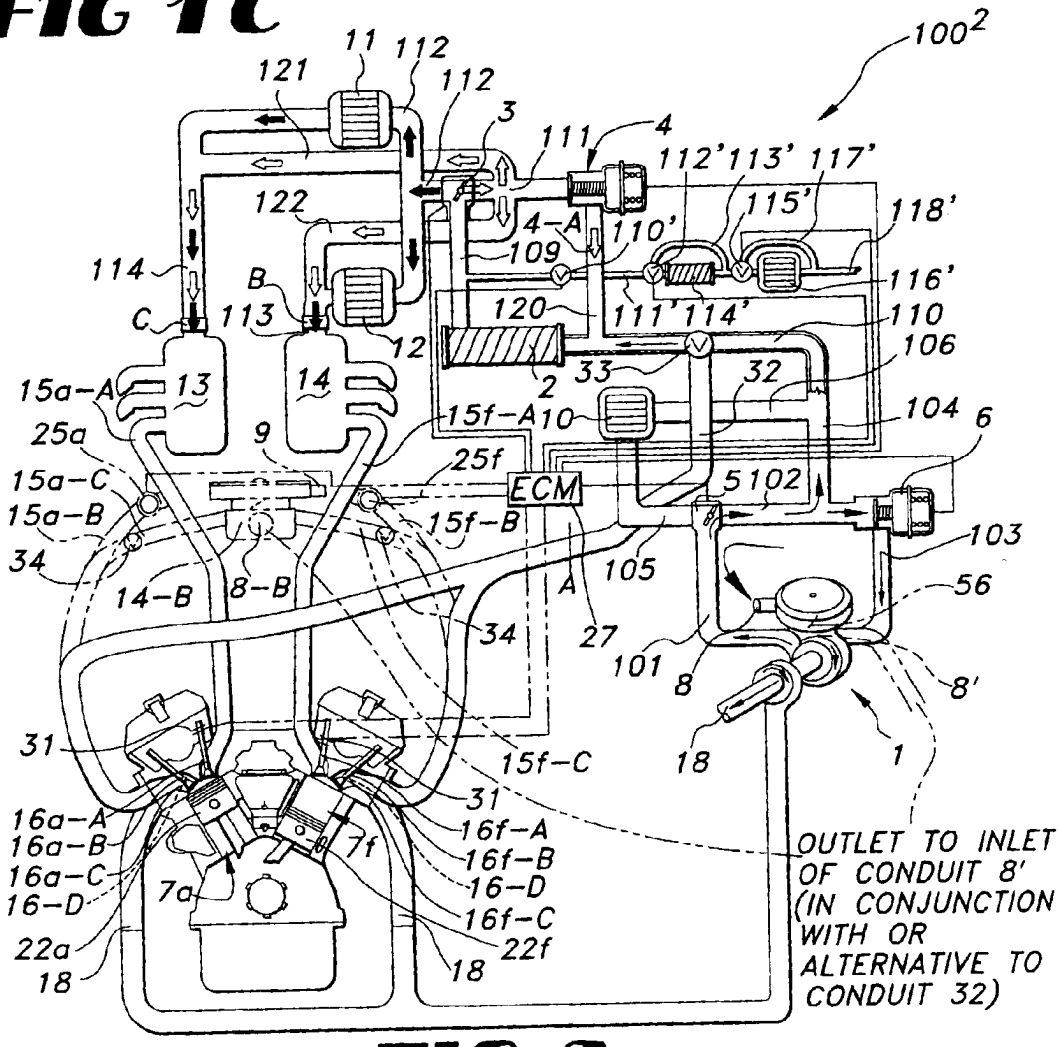
100
2
11
112
121
112
3
111
4
112'
113'
117'
122
115'
118'
4-A
110'
109
114
B
116'
C
113
120
111'
114'
110
12
106
33
32
15a-A
13
14
2
15f-A
10
104
6
25a
9
25f
ECM
5
102
15a-C
15a-B
15f-B
103
34
105
A
56
14-B
8-B
34
27
101
8
8'
31
15f-C
18
1
31
16a-A
16f-A
16a-B
16f-B
16a-C
16-D
16-D
7f
7a
16f-C
22a
22f
18
18
OUTLET TO INLET OF CONDUIT 8' (IN CONJUNCTION WITH OR ALTERNATIVE TO CONDUIT 32)

FIG 2

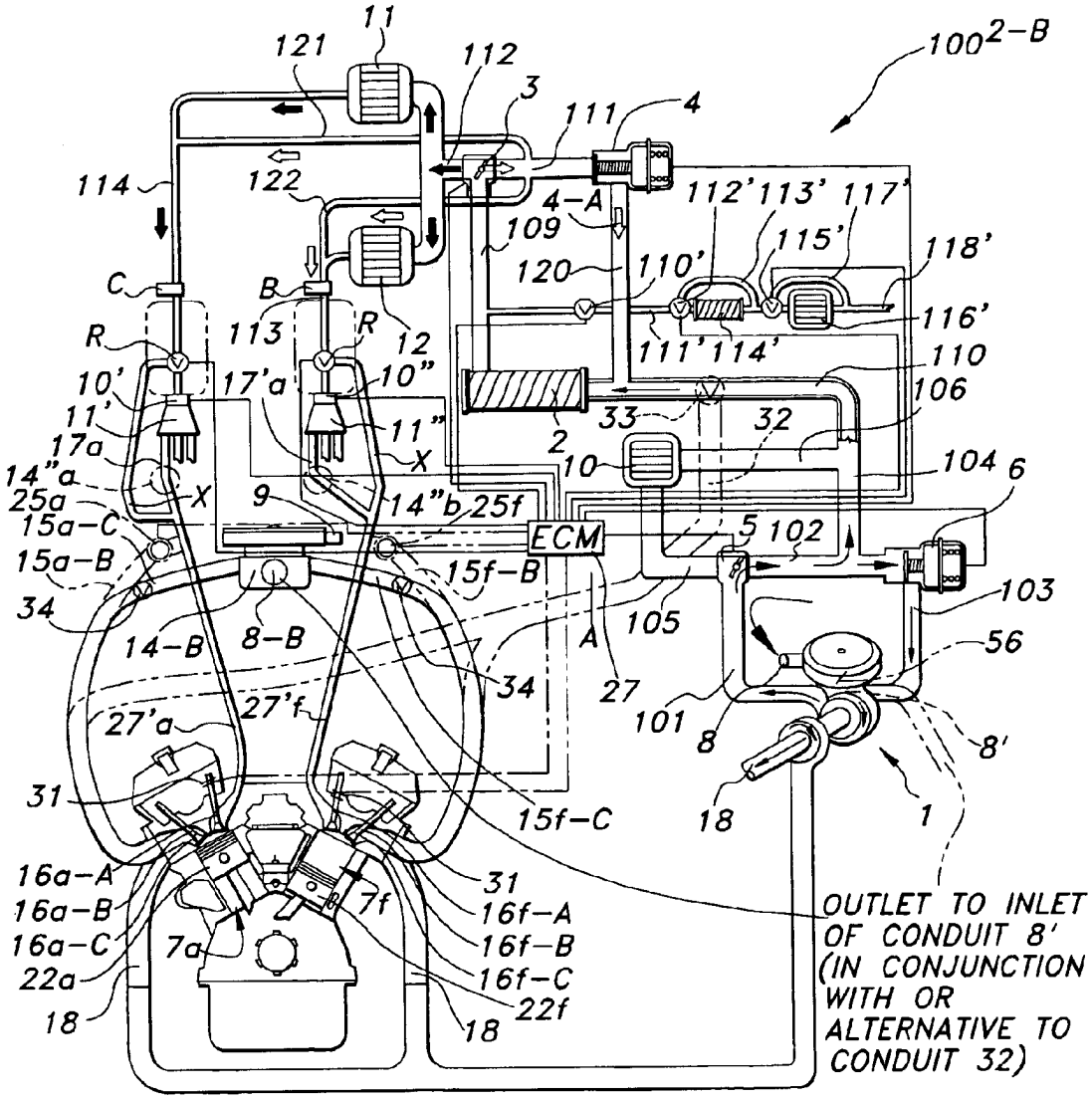
11
121
112
3
111
4
100
2-B
114
122
4-A
109
112'
113'
117'
115'
118'
120
110'
C
B
R
113
R
12
116'
111'
114'
110
10'
17'a
10"
106
11'
11"
33
32
17a
X
2
14"a
25a
X
9
14"b
25f
10
104
6
15a-C
ECM
5
102
15a-B
15f-B
103
34
105
A
14-B
8-B
56
34
27
27'a
27'f
101
8
8'
31
15f-C
18
1
16a-A
31
16a-B
7f
16f-A
16a-C
7a
16f-B
22a
16f-C
22f
18
18
OUTLET TO INLET
OF CONDUIT 8'
(IN CONJUNCTION
WITH OR
ALTERNATIVE TO
CONDUIT 32)

FIG 2B

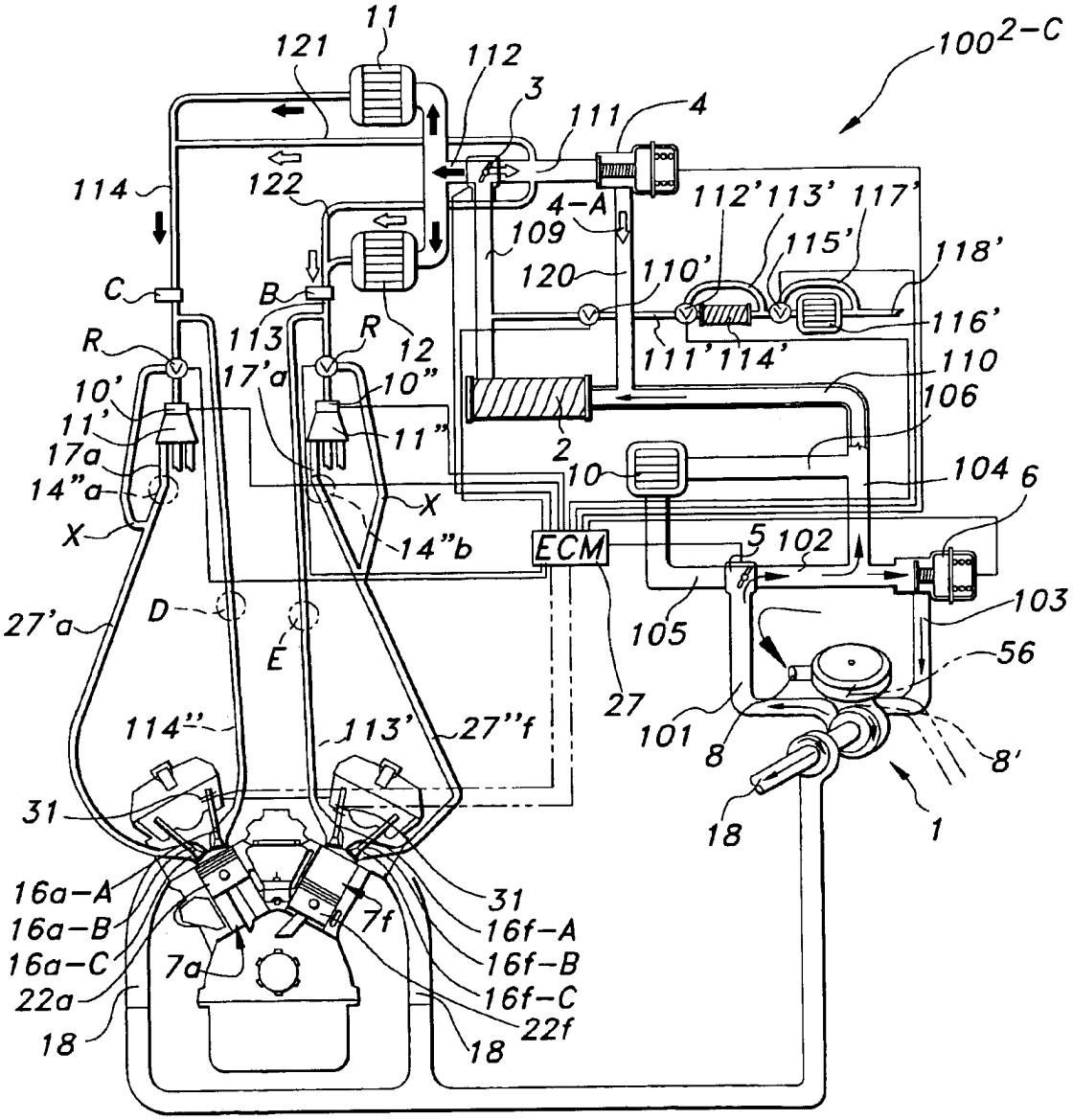
11
121
112
3
111
4
100
2-C
114
122
4-A
109
112'
113'
117'
115'
118'
120
110'
C
B
R
113
R
12
116'
111'
114'
110
17'a
10"
106
10'
11'
11"
2
17a
14"a
10
104
6
X
X
14"b
ECM
5
102
103
27'a
D
E
105
56
27
114"
113'
27"f
101
8
8'
31
18
1
16a-A
16a-B
16a-C
22a
18
7a
7f
31
16f-A
16f-B
16f-C
22f
18

FIG 2C

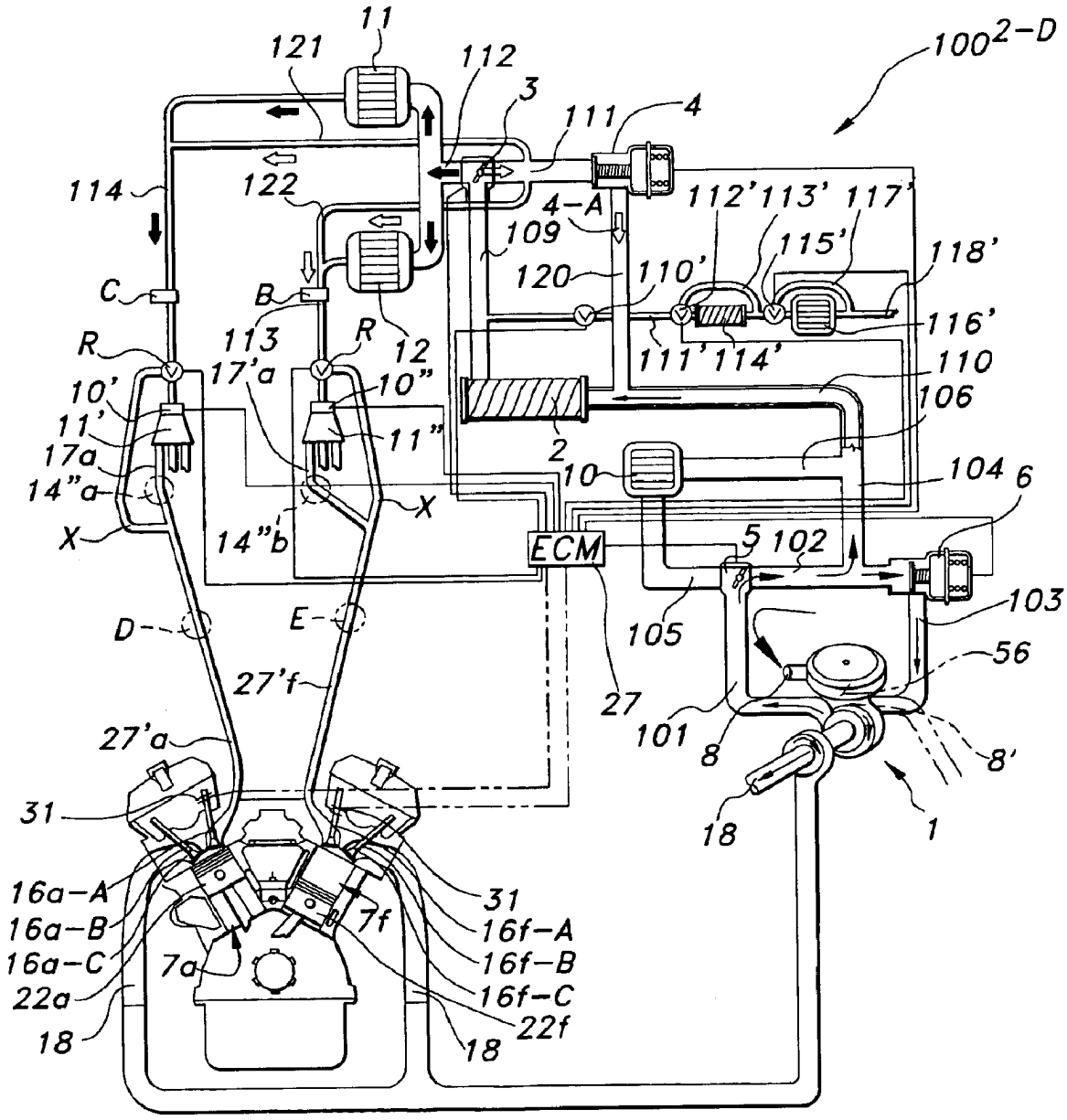
11
121
112
3
111
4
100
2-D
114
122
4-A
109
112'
113'
117'
115'
118'
120
110'
116'
C
B
R
113
17'a
R
12
111'
114'
110
10'
10"
106
11'
11"
2
17a
10
104
6
14"a
X
X
14"b
ECM
5
102
103
D
E
105
56
27'f
27
27'a
101
8
8'
31
18
1
16a-A
16a-B
16a-C
22a
18
7a
7f
31
16f-A
16f-B
16f-C
22f
18

FIG 2D

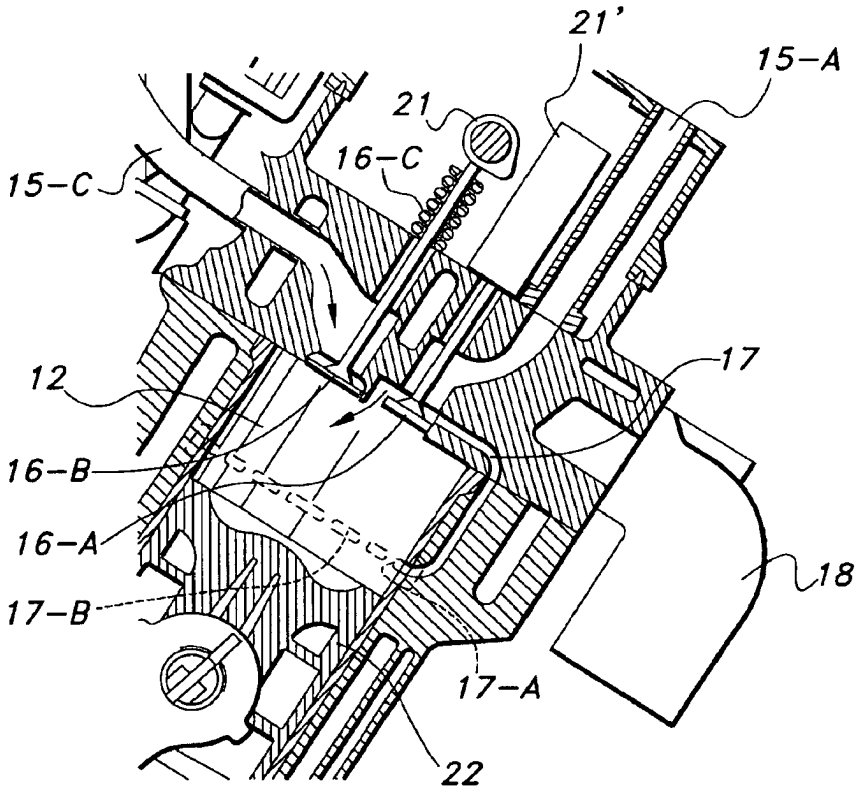
21'
15-A
21
16-C
15-C
17
12
16-B
16-A
18
17-B
17-A
22

FIG 3

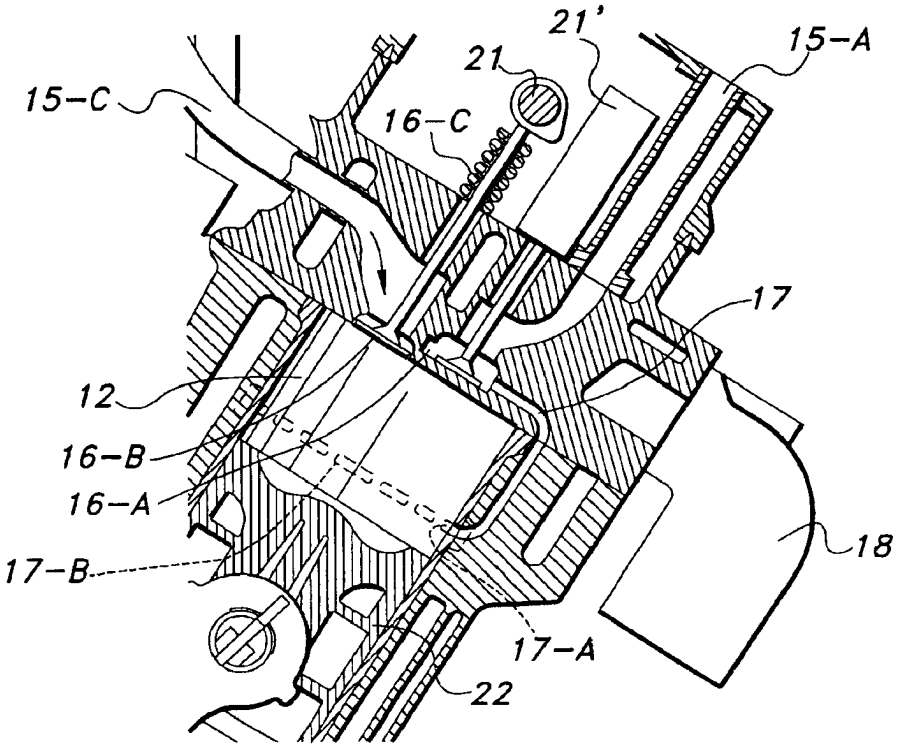
21'
15-A
21
15-C
16-C
17
12
16-B
16-A
18
17-B
17-A
22

FIG 4

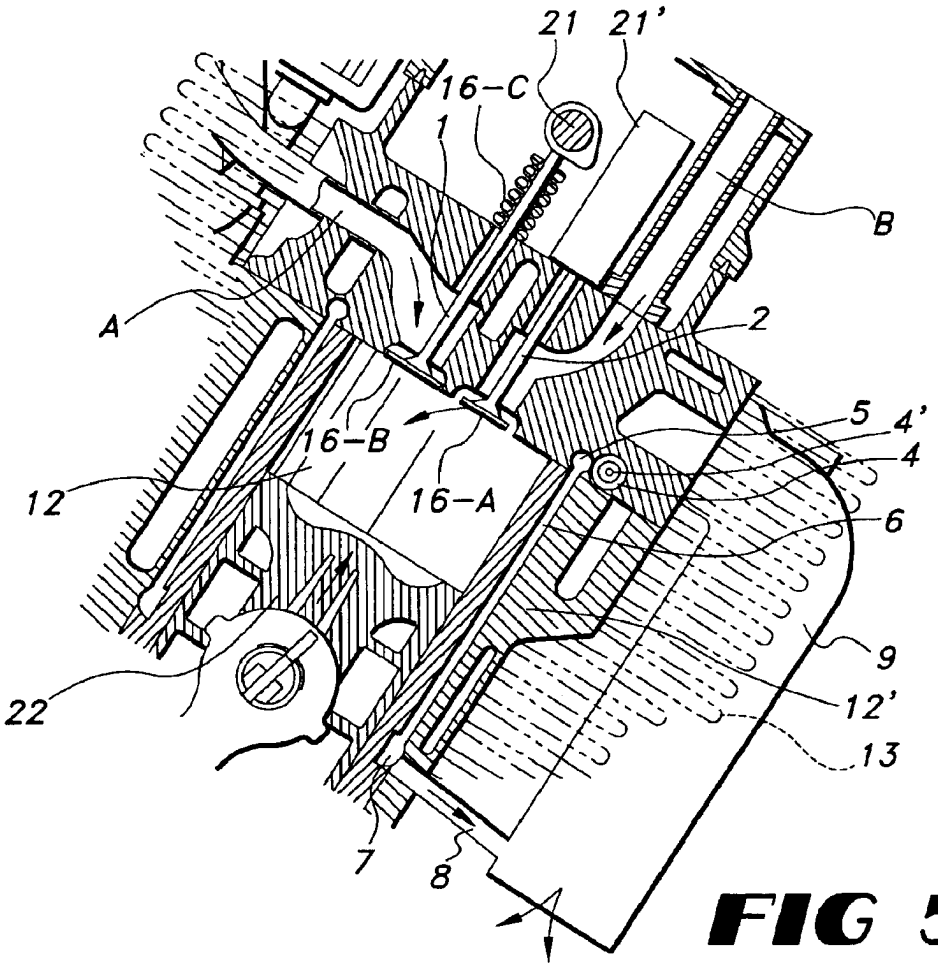

FIG 5

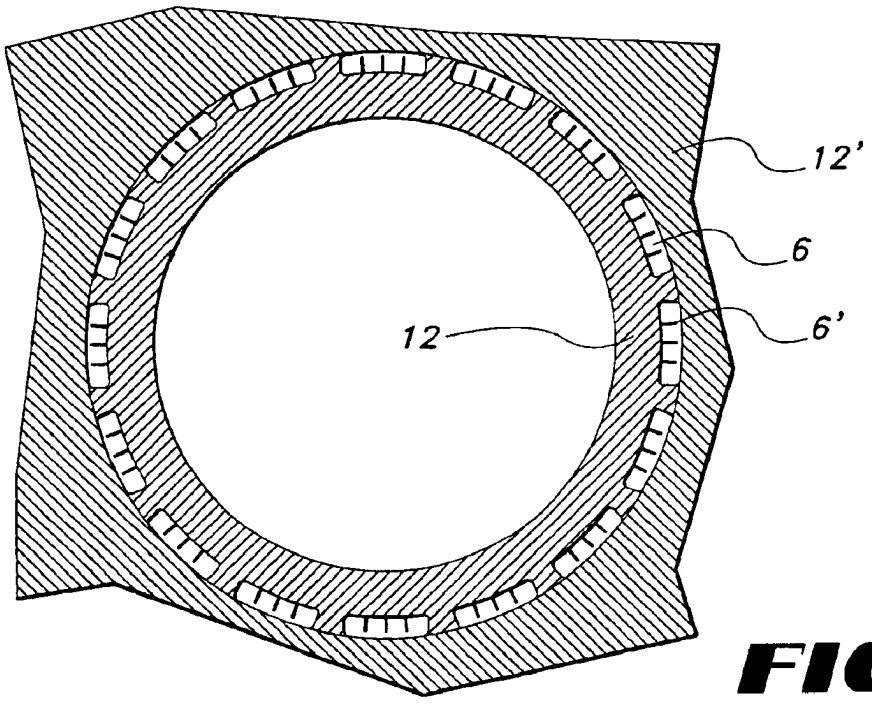

FIG 6

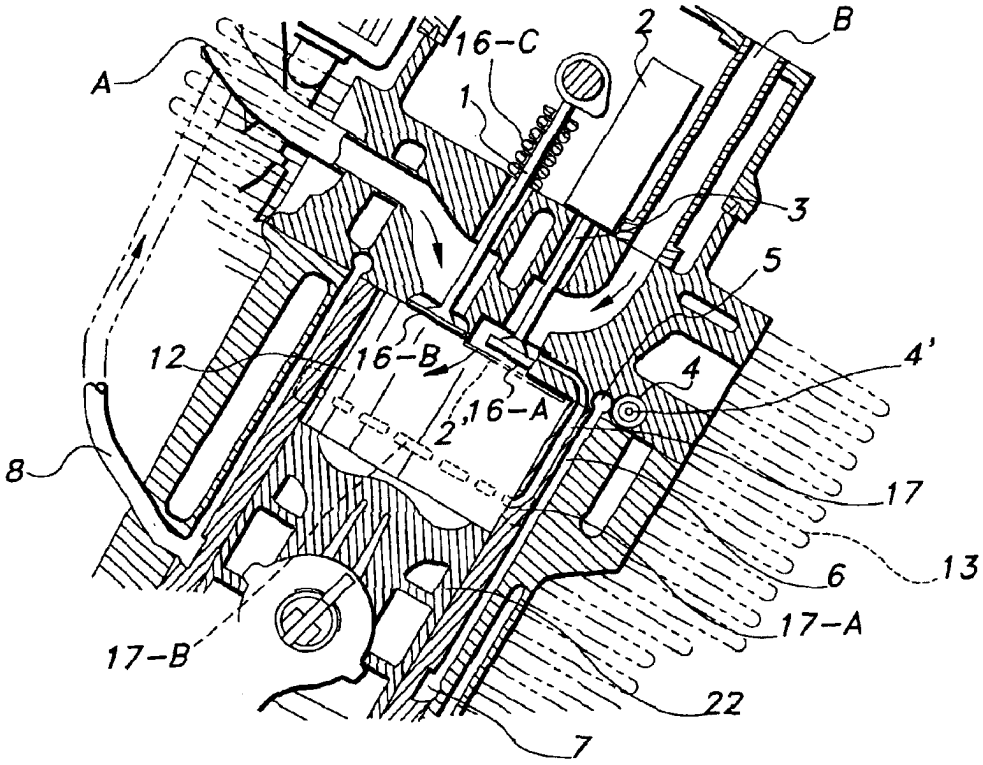
A
16-C
1
2
B
3
5
4'
12
16-B
2'
16-A
4
8
17
13
6
17-A
17-B
22
7

FIG 7

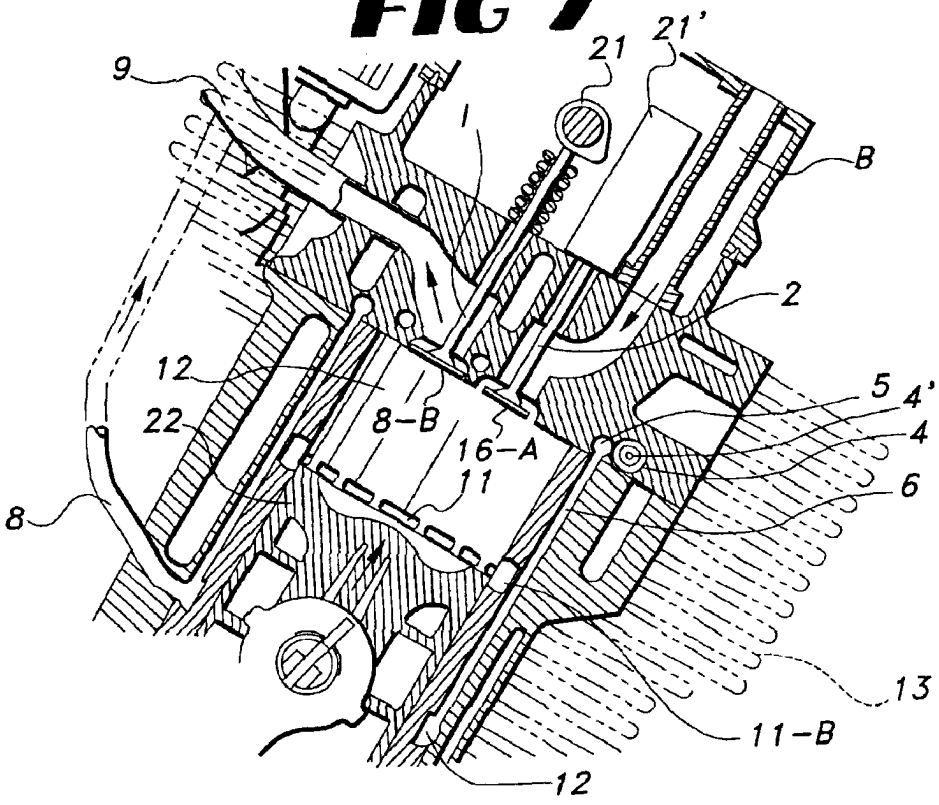
9
21
21'
1
B
2
12
5
4'
22
8-B
16-A
4
11
6
8
13
11-B
12

FIG 8

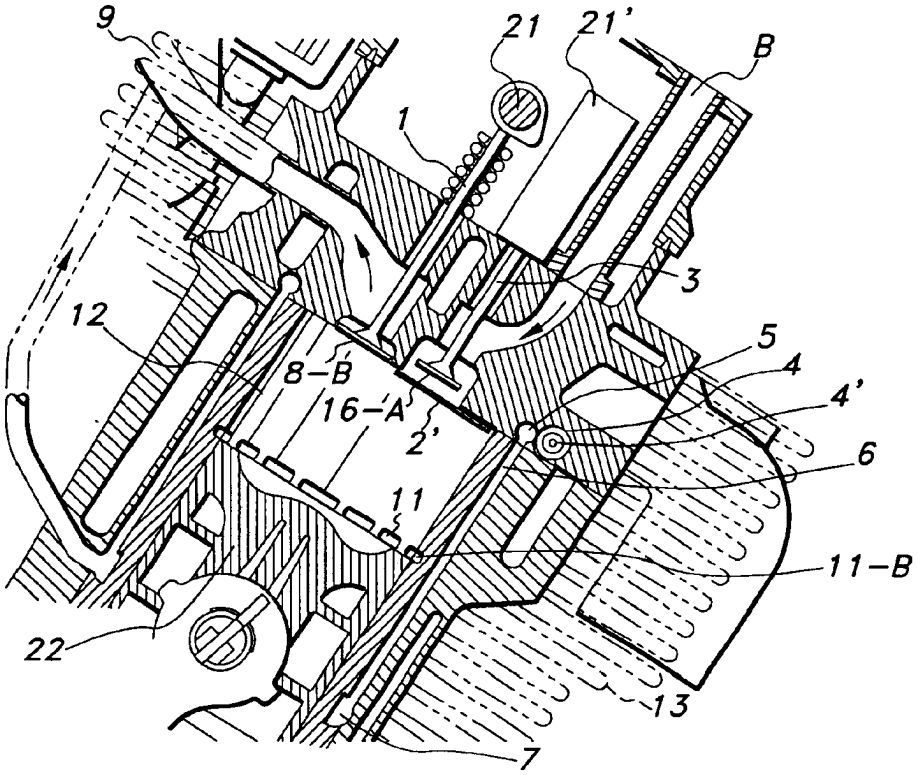
9
21
21'
B
1
3
12
5
4
4'
8–B
16–A
2'
6
11
11–B
22
13
7

FIG 9

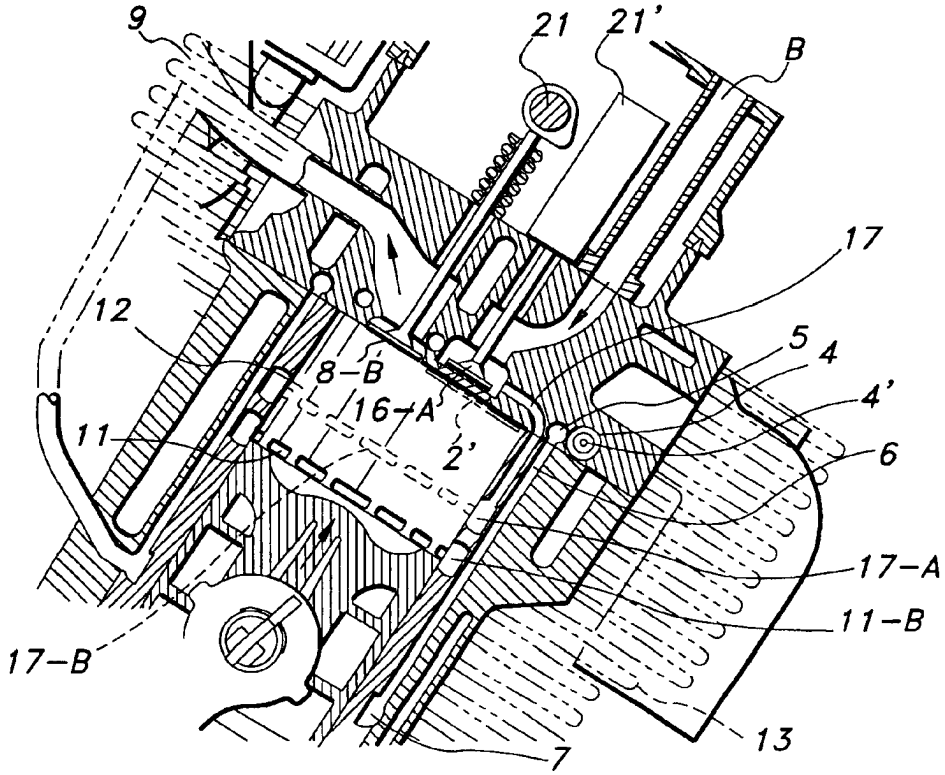
9
21
21'
B
17
12
5
4
8–B
4'
16–A
11
2'
6
17–A
11–B
17–B
13
7

FIG 10

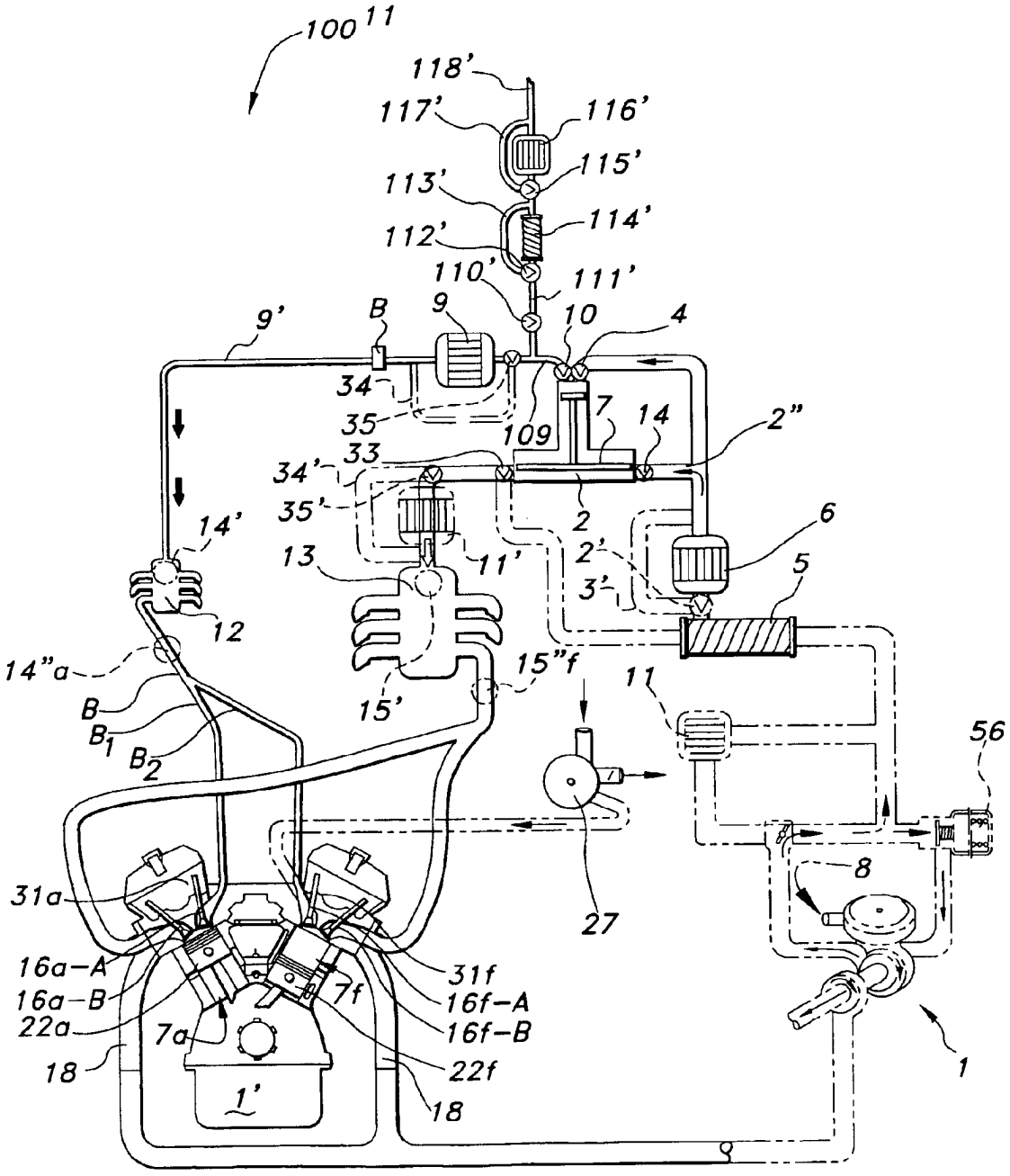
100
11
118'
117'
116'
115'
113'
114'
112'
110'
111'
9'
B
9
10
4
34
35
109
7
14
2"
33
34'
35'
2
6
14'
13
11'
2'
3'
5
12
14"a
15"f
11
56
B
B1
B2
15'
27
8
31a
16a-A
16a-B
22a
18
7a
1'
7f
31f
16f-A
16f-B
22f
18
1

FIG 11

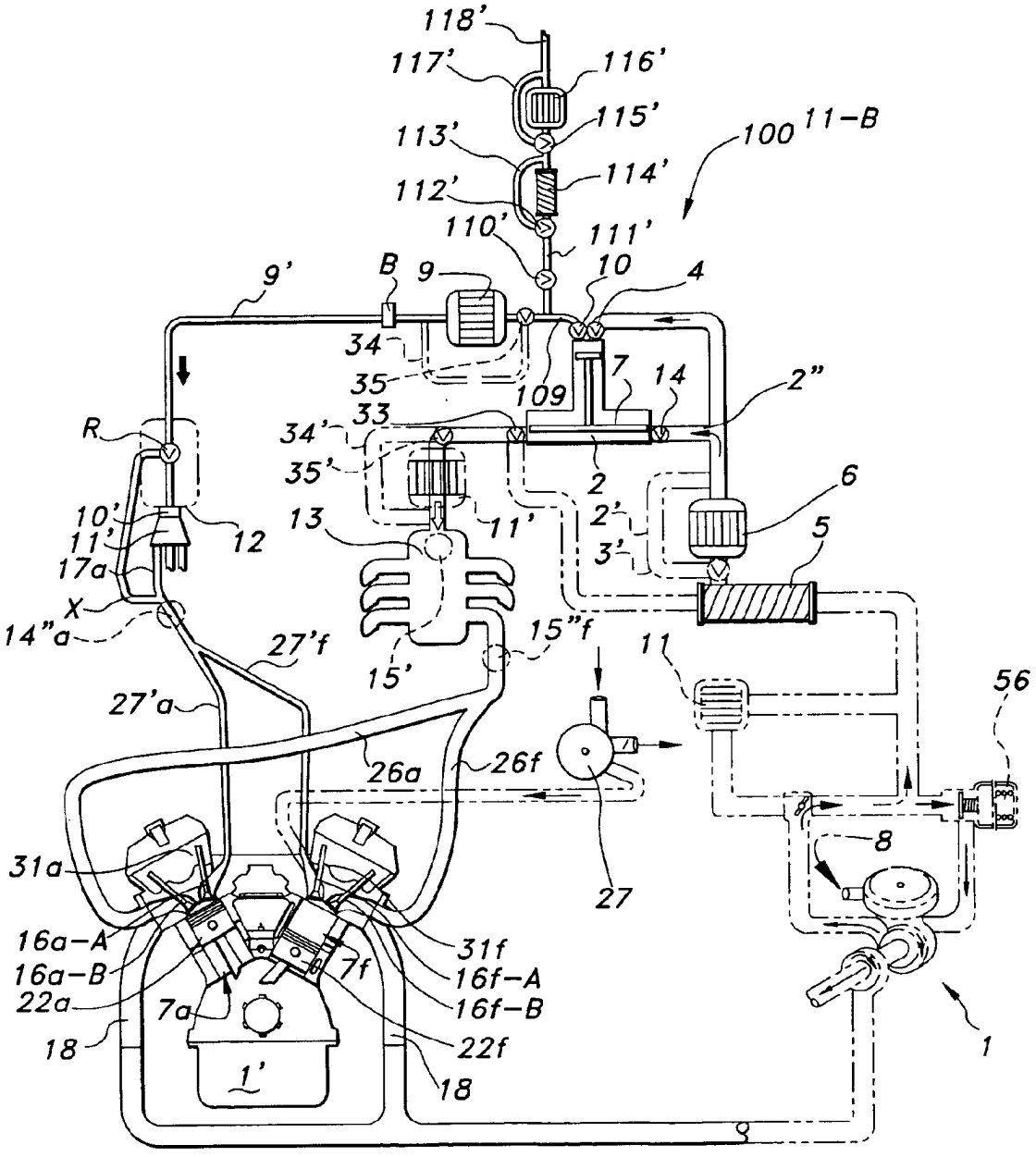
118'
117'
116'
115'
113'
114'
112'
110'
111'
100
11-B
9'
B
9
10
4
34
35
109
7
14
2"
R
33
34'
35'
2
2'
3'
6
5
10'
11'
17a
12
13
11'
X
14"a
27'f
15'
15"f
11
56
27'a
26a
26f
8
31a
27
16a-A
16a-B
22a
18
7a
1'
7f
31f
16f-A
16f-B
22f
18
1

FIG 11B

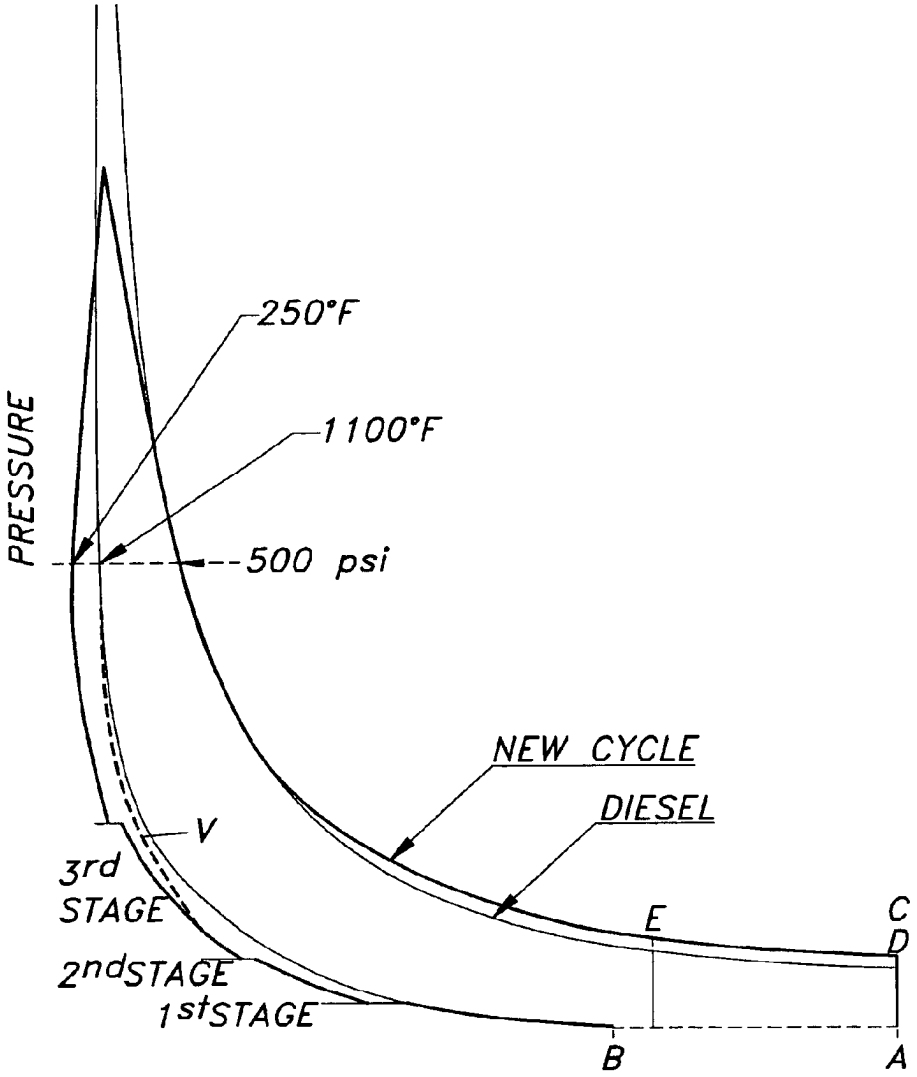

A – COMPRESSION BEGINS IN 2–STROKE AND 4–STROKE DIESEL CYCLE ENGINE
B – COMPRESSION BEGINS IN 2–STROKE AND 4–STROKE NEW CYCLE ENGINE
C – EXPANSION ENDS IN 4–STROKE DIESEL CYCLE ENGINE
D – EXPANSION ENDS IN 2–STROKE AND 4–STROKE NEW CYCLE ENGINE
E – EXPANSION ENDS (AT EXHAUST BLOW–DOWN) IN 2–STROKE DIESEL CYCLE ENGINE
V – SEE NOTE 1 IN DESCRIPTION

FIG 12

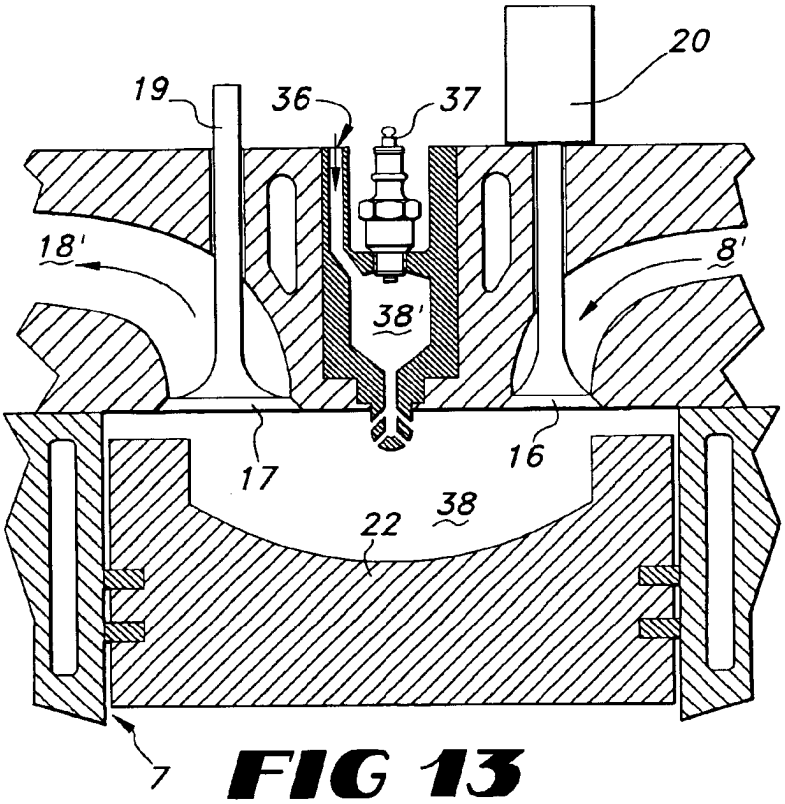

FIG 13

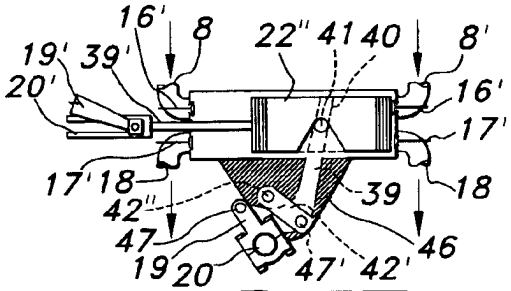

FIG 15

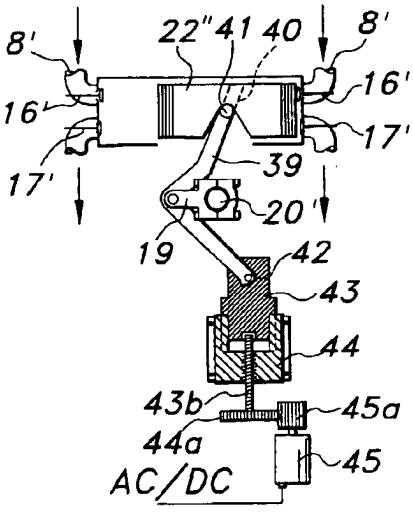

FIG 14

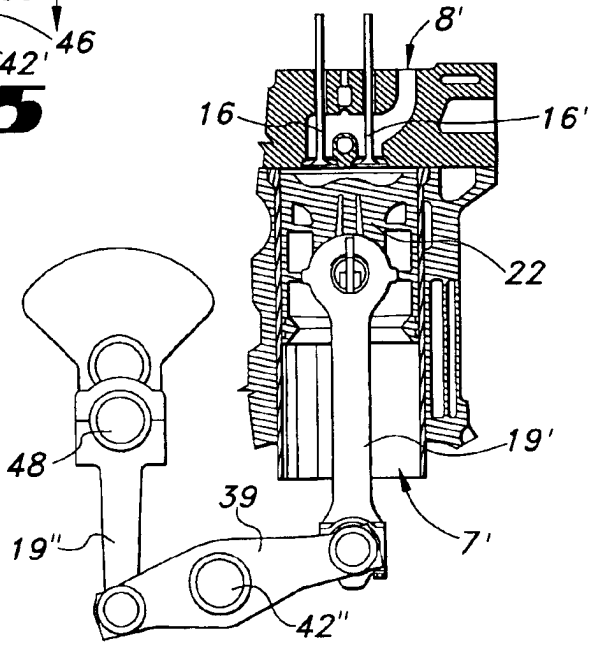

FIG 16

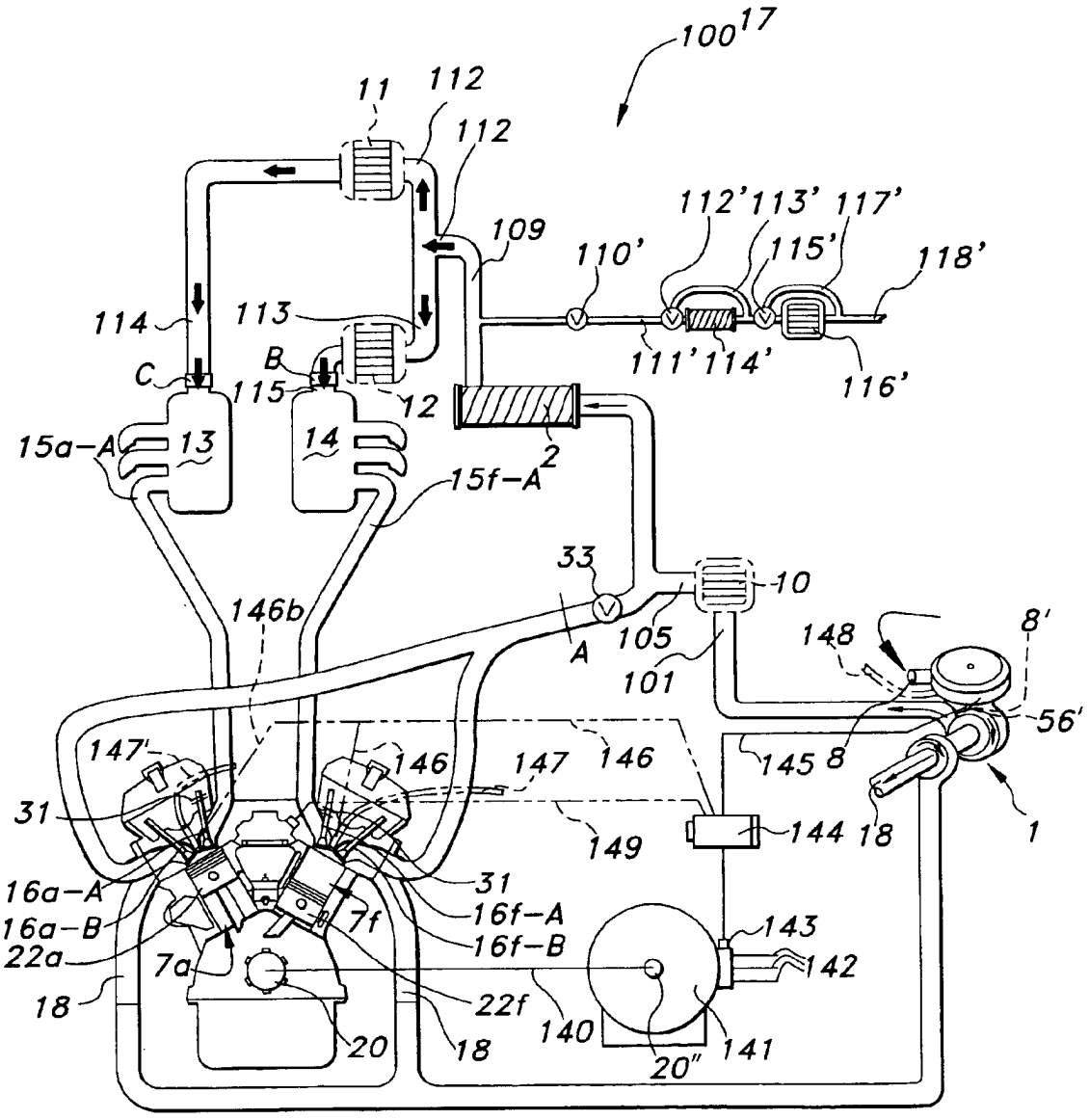
100
17
11
112
112
109
112'
113'
117'
115'
118'
110'
114
113
111'
114'
116'
C
B
115
12
2
15a–A
13
14
15f–A
33
10
146b
A
105
101
148
8'
56'
147'
146
147
146
145
8
31
149
144
18
1
16a–A
16a–B
22a
18
7a
7f
31
16f–A
16f–B
143
142
22f
140
141
20
18
20"

FIG 17

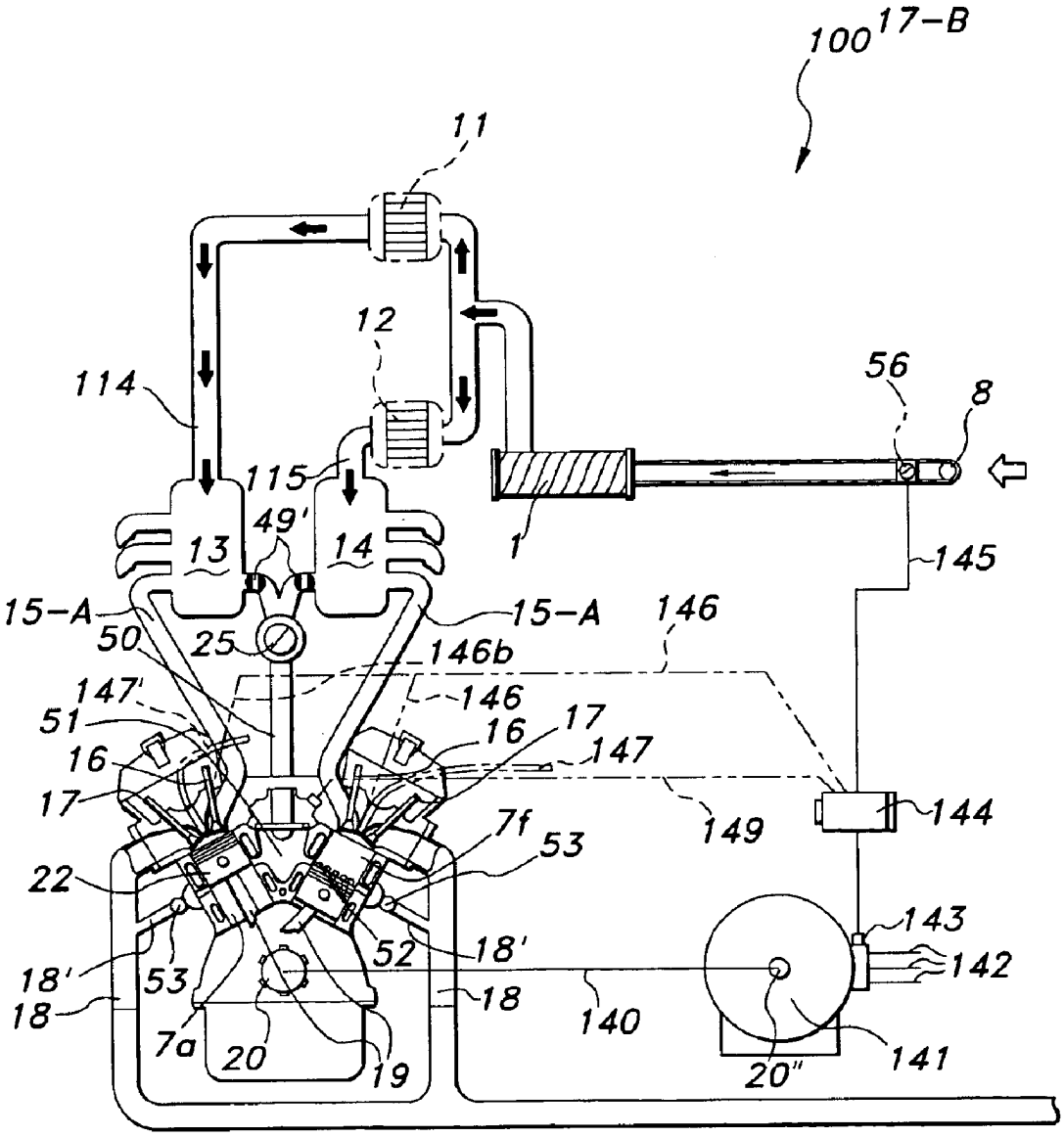
100
17-B
11
12
114
56
8
115
49'
13
14
1
145
15-A
50
25
15-A
146
146b
147'
146
51
16
17
147
149
144
7f
53
22
143
142
52
18'
18'
53
18
140
18
7a
20
19
20"
141

FIG 17B

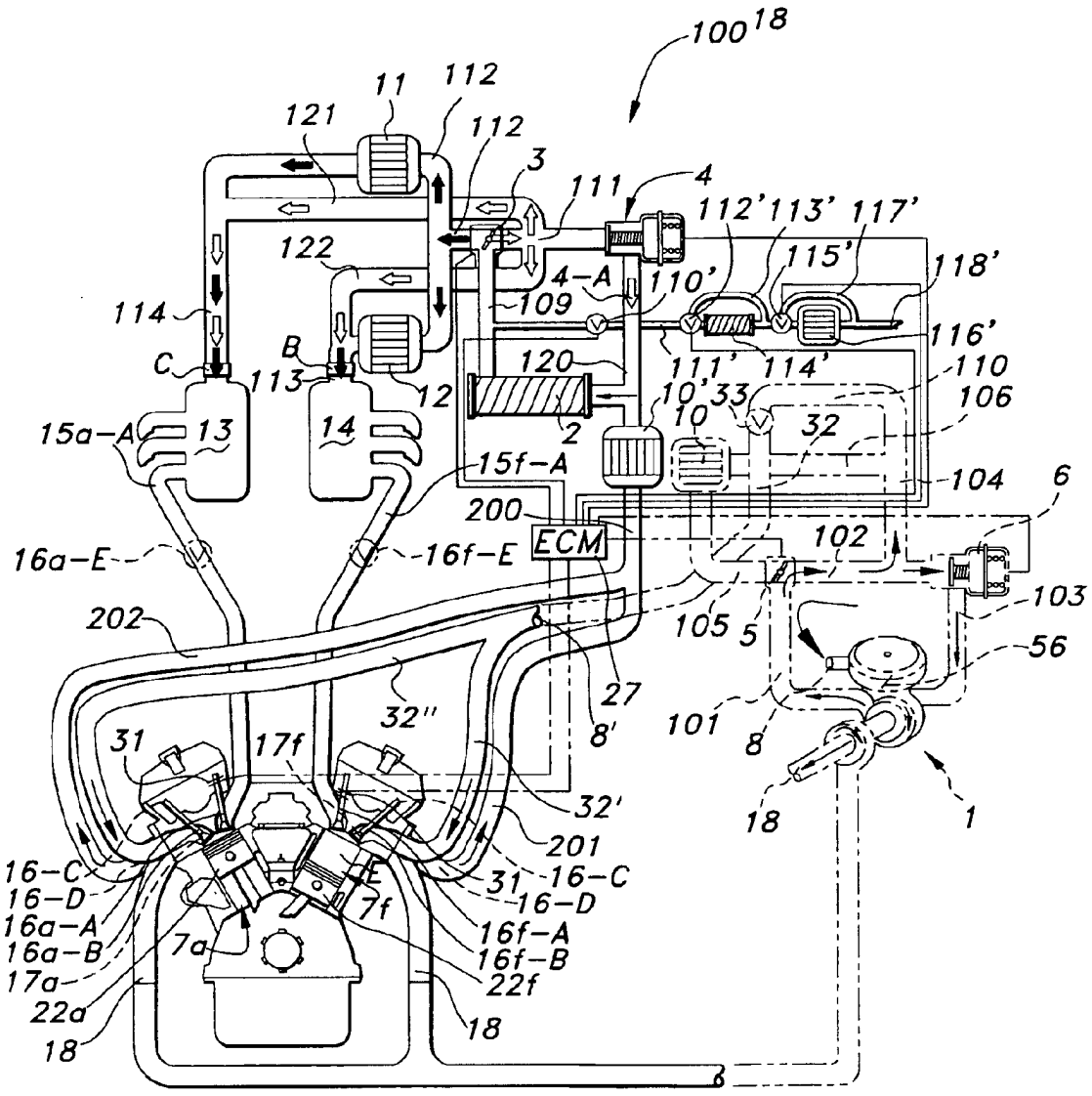
100
18
11
112
121
112
3
111
4
112'
113'
117'
122
115'
118'
4-A
110'
109
114
116'
B
C
120
111'
114'
110
113
12
10'
33
106
15a-A
13
14
2
10
32
15f-A
104
6
200
ECM
102
16a-E
16f-E
103
202
105
5
56
27
32''
8'
101
8
31
17f
32'
18
1
201
16-C
16-D
16a-A
16a-B
17a
22a
18
7f
7a
16f-A
16f-B
22f

FIG 18

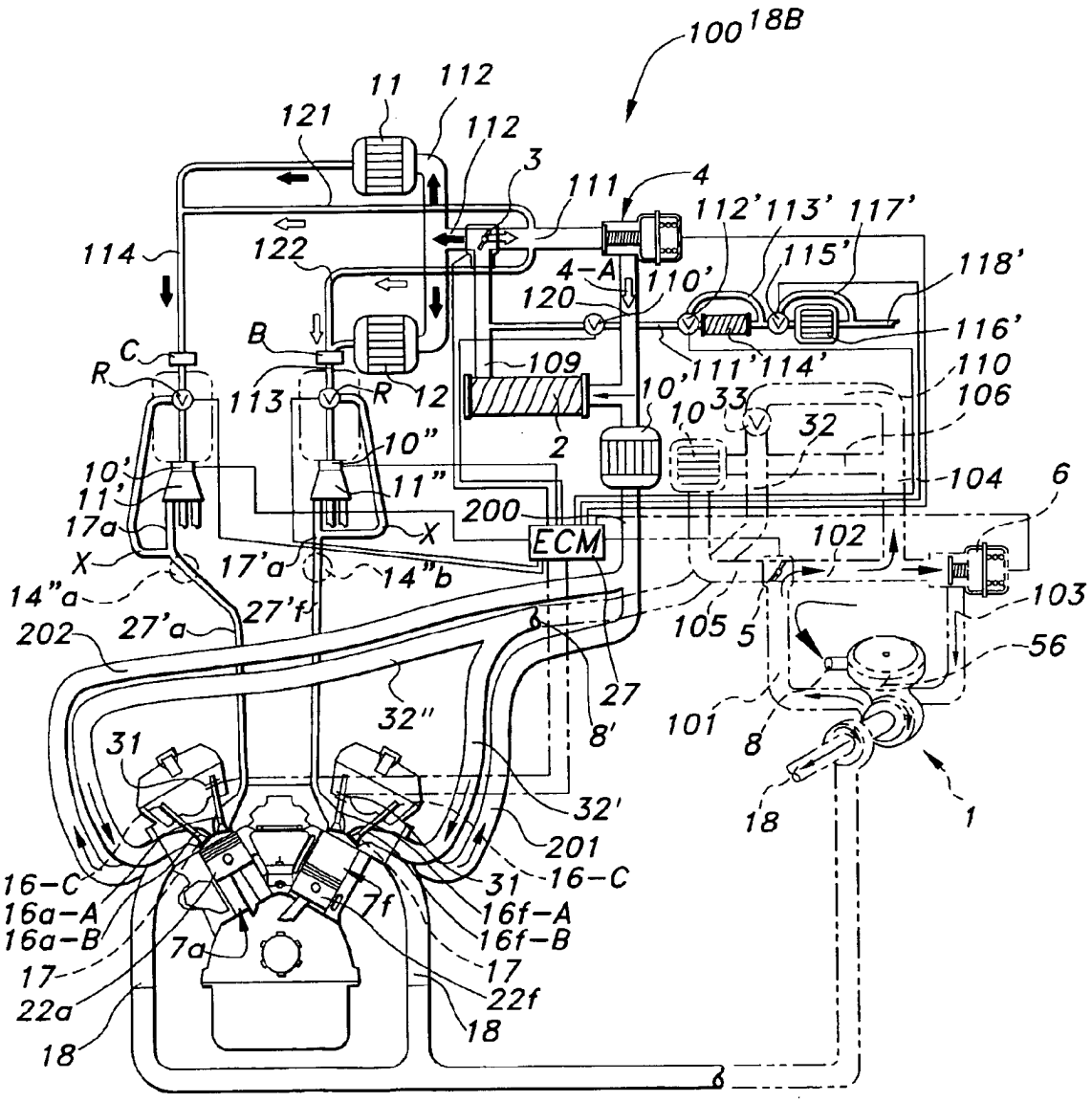
100
18B
11
112
121
112
3
111
4
112'
113'
117'
114
122
4-A
110'
115'
118'
120
116'
B
C
R
109
111'
114'
110
113
R
12
10'
10
33
106
10"
2
32
10'
11'
11"
104
6
17a
200
ECM
102
X
X
17'a
14"b
14"a
103
27'a
27'f
105
5
56
202
27
32"
8'
101
8
31
32'
18
1
201
16-C
31
16-C
16a-A
7f
16f-A
16a-B
7a
16f-B
17
17
22a
22f
18
18

FIG 18B

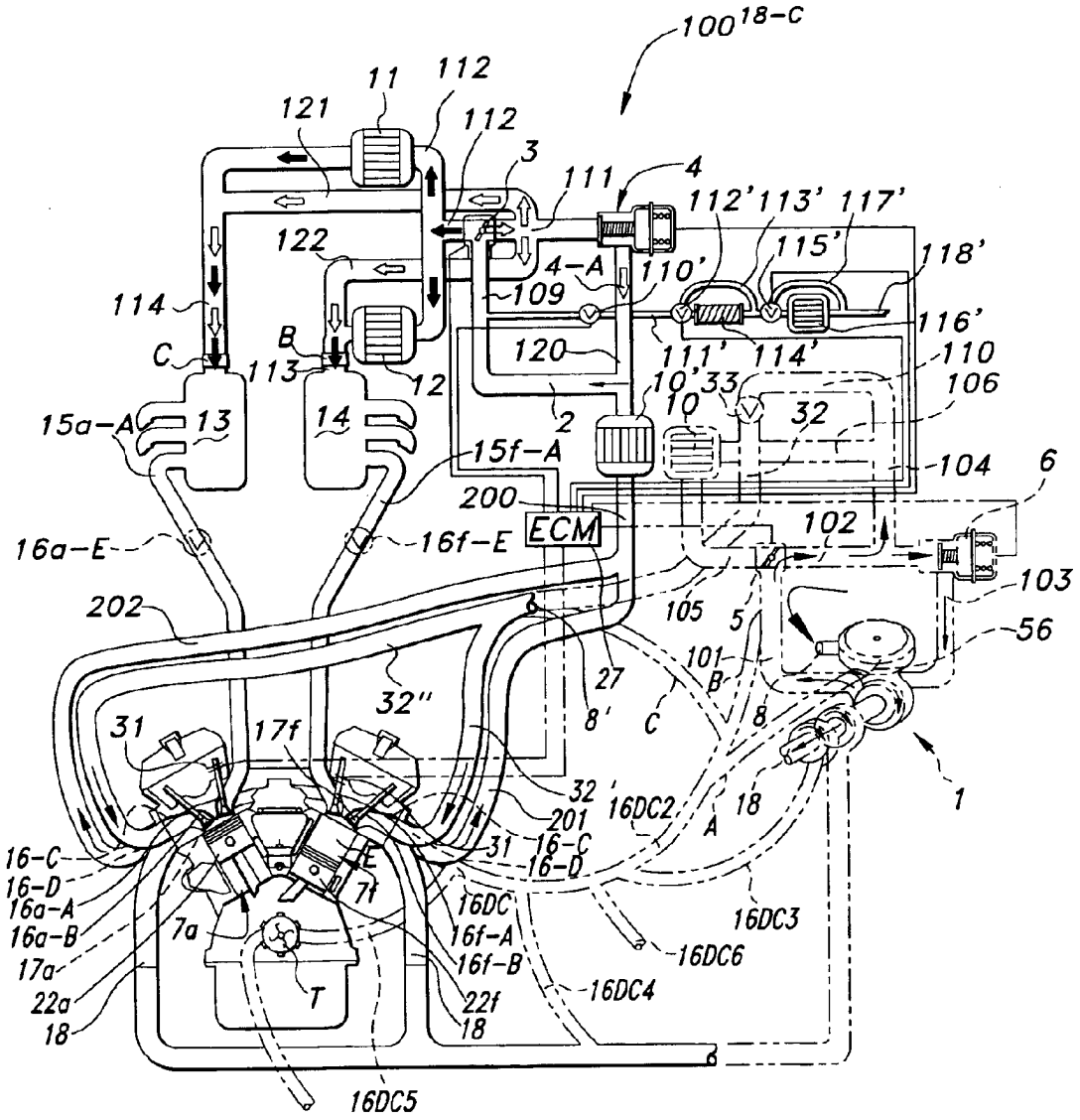
100
18-C
11
112
121
112
3
111
4
112'
113'
117'
122
115'
118'
4-A
110'
109
114
116'
B
C
120
111'
114'
110
113
12
10'
33
106
15a-A
13
14
2
10
32
15f-A
104
6
200
ECM
102
16a-E
16f-E
103
202
105
5
56
101
B
27
32"
8'
C
8
31
17f
32'
201
16DC2
A
18
1
16-C
16-D
16a-A
16a-B
17a
22a
18
7a
7f
T
16DC
16f-A
16f-B
22f
18
16DC4
16DC3
16DC6
16DC5

FIG 18C

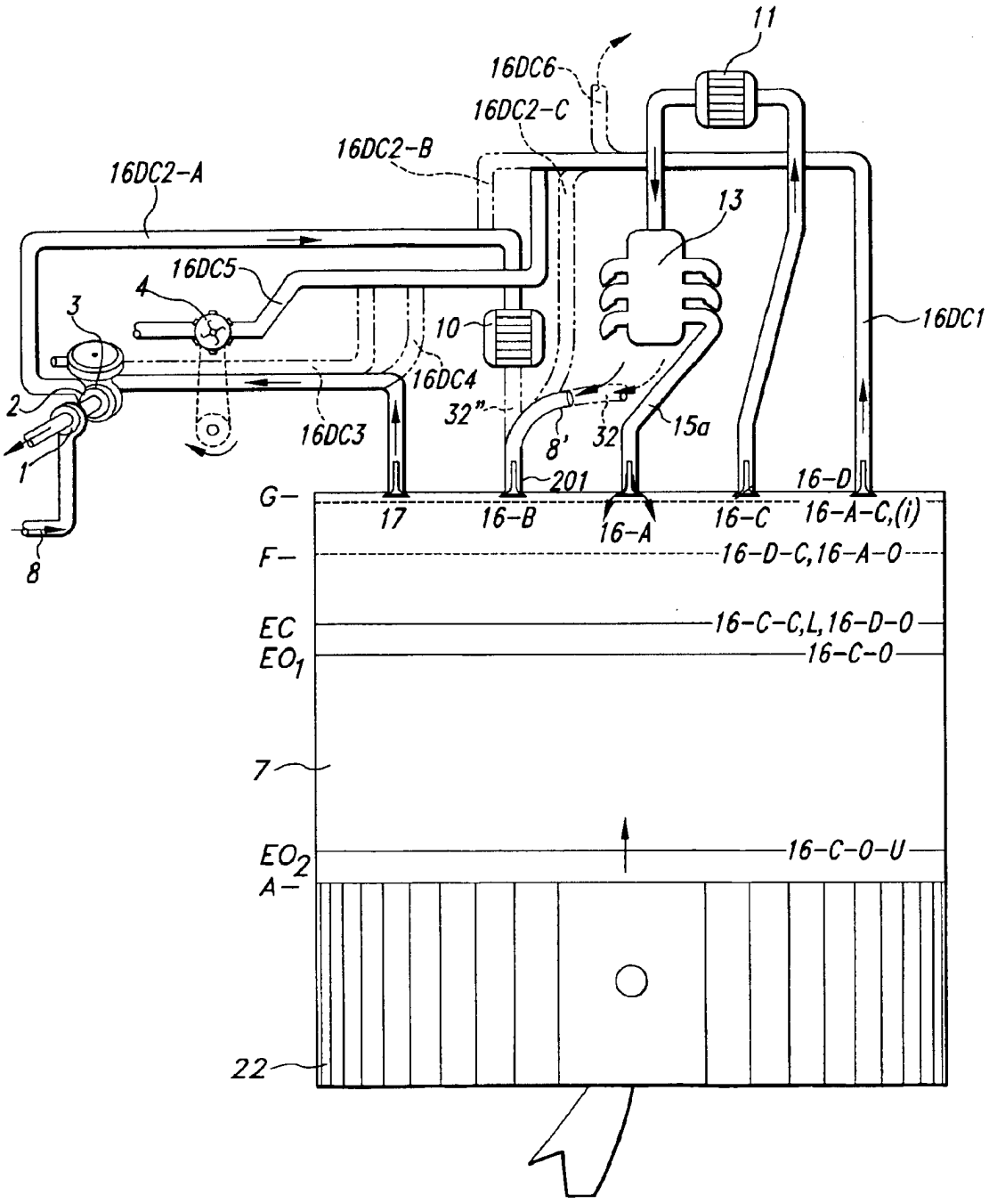
11
16DC6
16DC2-C
16DC2-B
16DC2-A
13
16DC5
4
3
10
16DC1
16DC4
2
32"
8'
32
15a
16DC3
1
201
16-D
G—
17
16-B
16-A
16-C
16-A-C,(i)
F—
16-D-C,16-A-O
EC
16-C-C,L,16-D-O
EO1
16-C-O
7
EO2
16-C-O-U
A—
22
8

FIG 18D

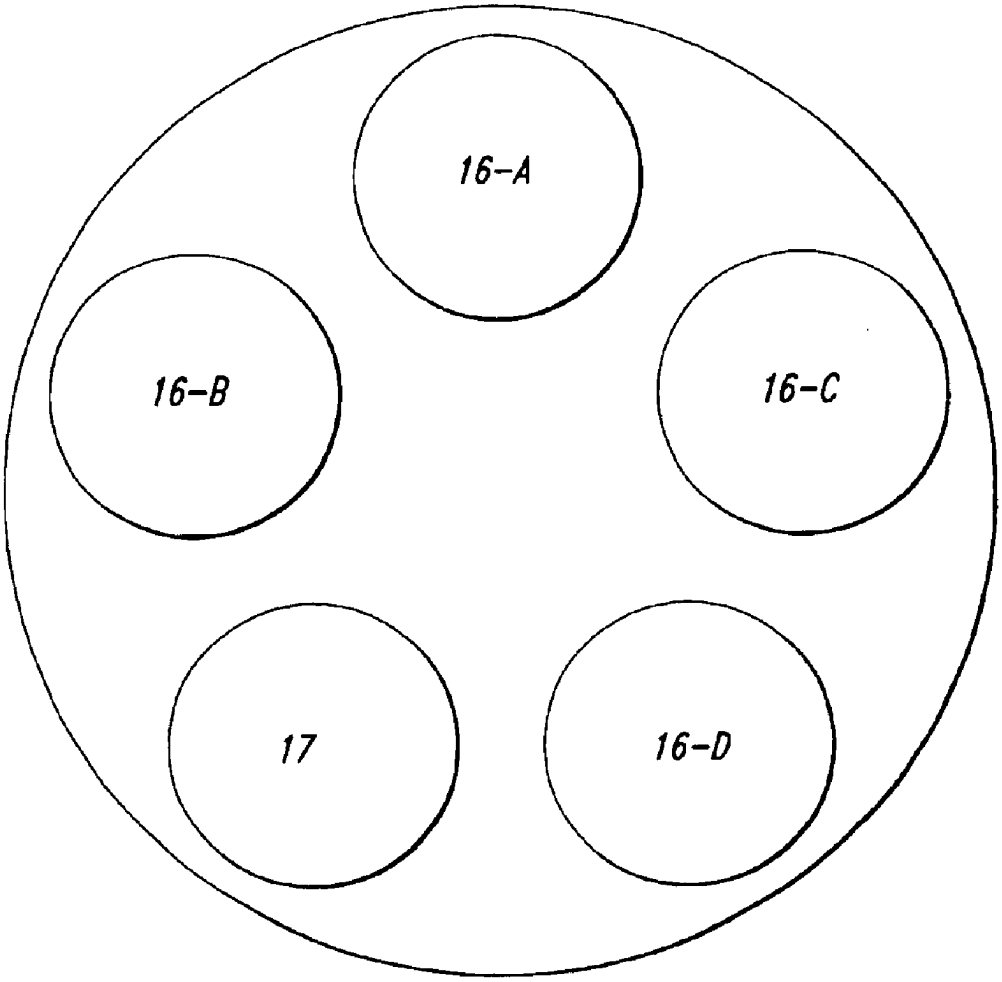

FIG 18E

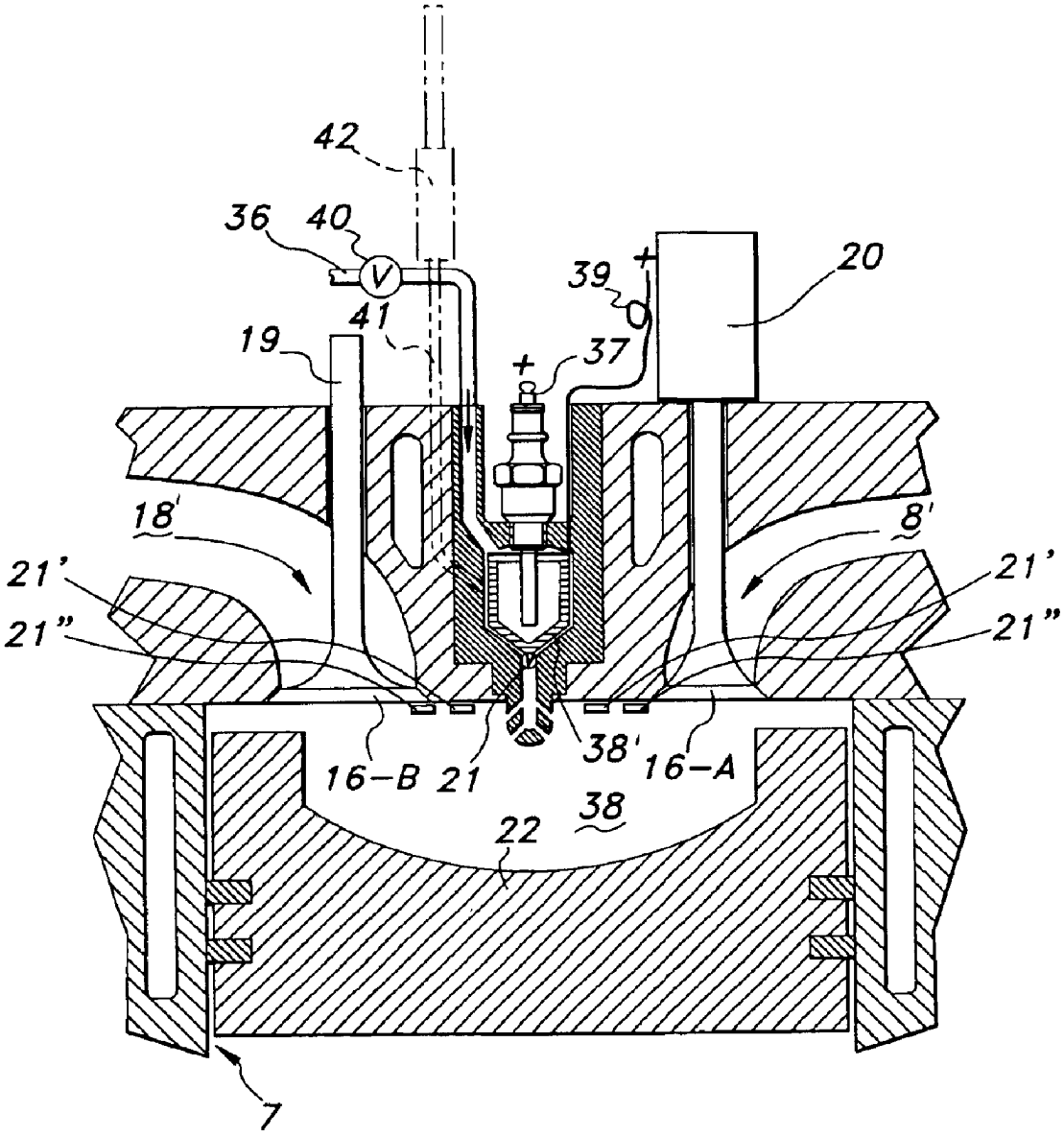

FIG 19

E-FILED
Thursday, 09 February, 2006 05:29:42 PM
Clerk, U.S. District Court, ILCD

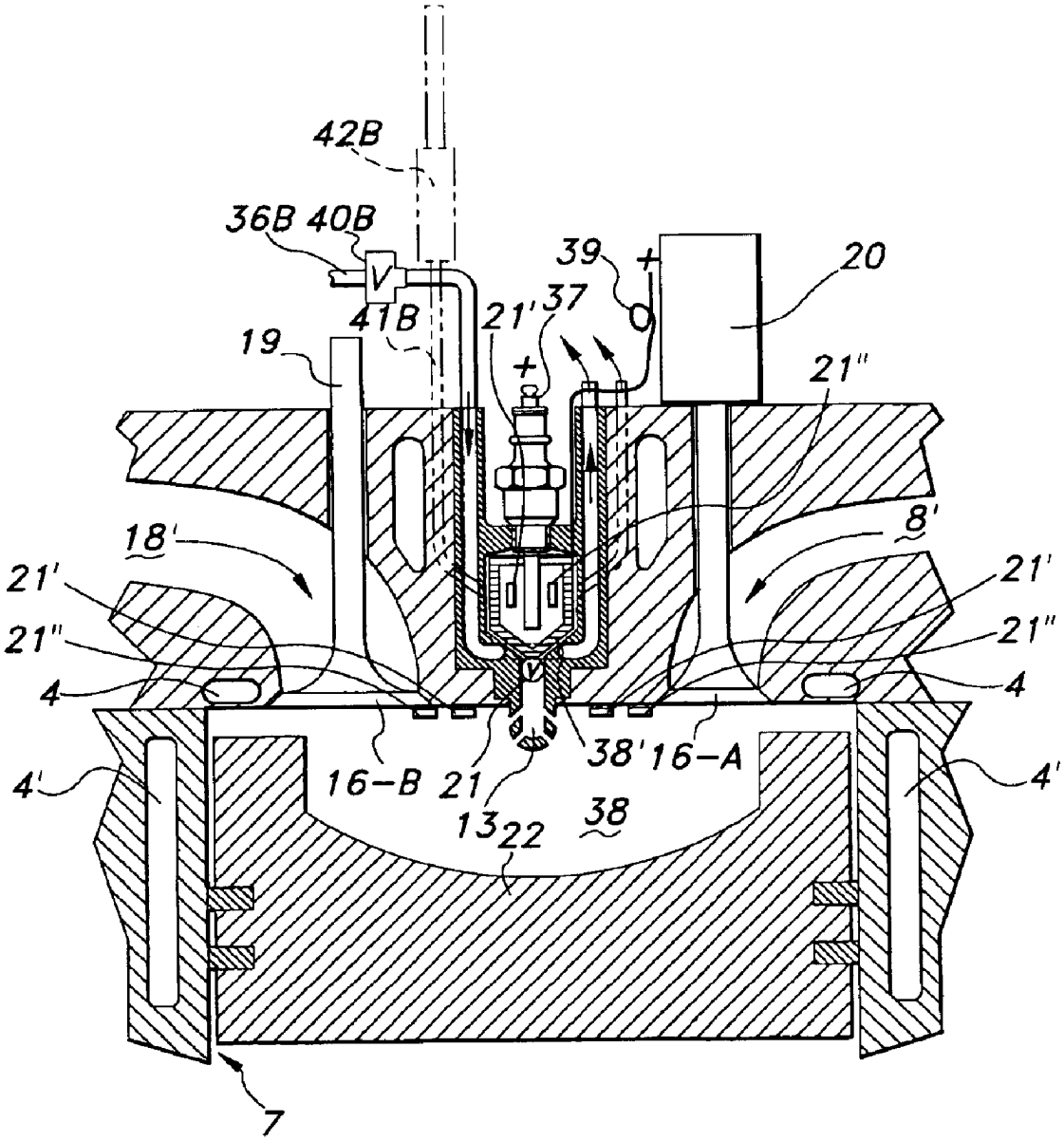

FIG 19B

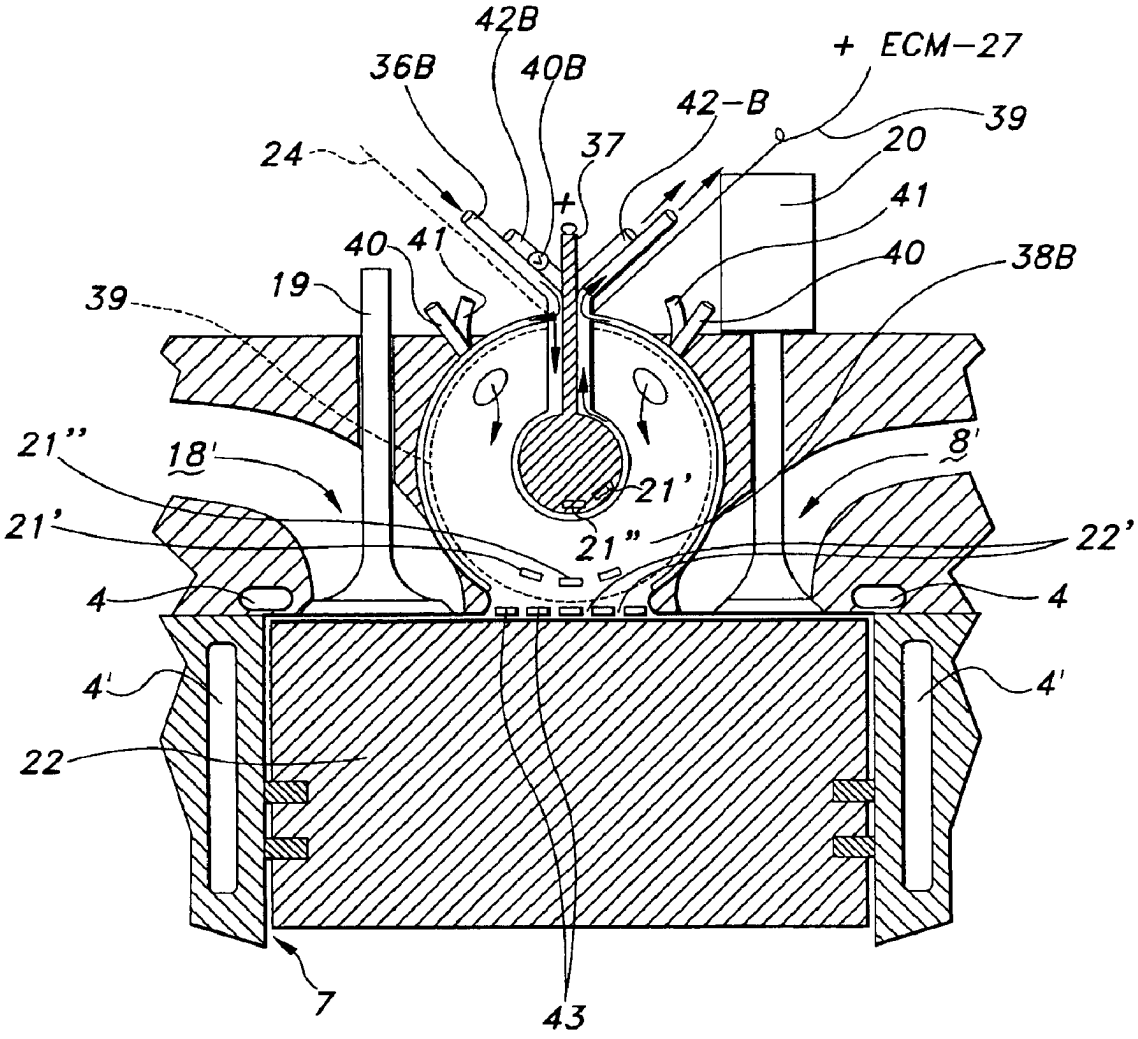
42B
36B
40B
+ ECM-27
42-B
39
24
37
20
41
40 41
40
38B
19
39
21''
18'
8'
21'
21'
22'
4
4
4'
4'
22
7
43

FIG 19C

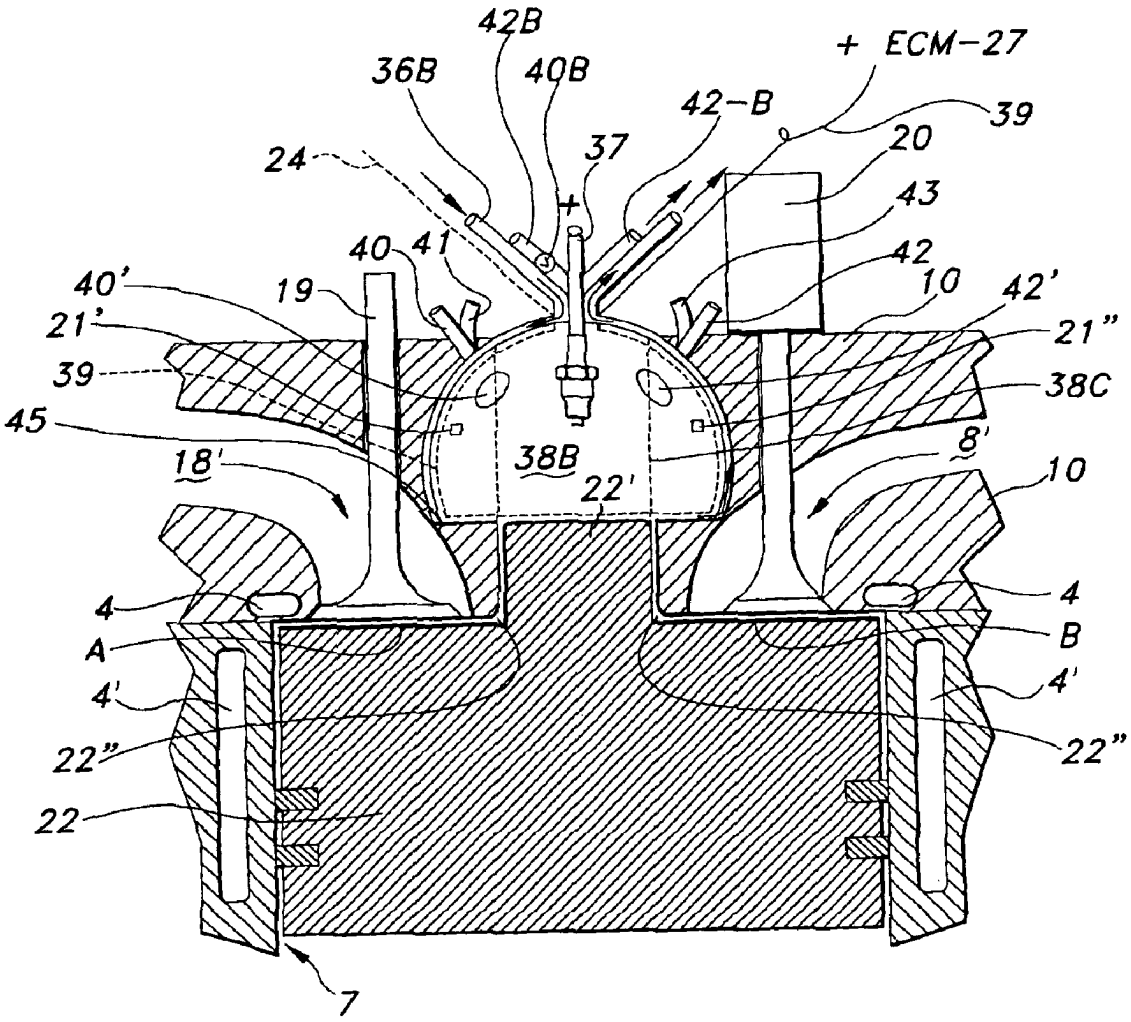
42B
36B
40B
+ ECM-27
42-B
39
24
37
20
43
40
41
42
40'
19
10
42'
21'
21"
39
38C
45
38B
8'
18'
22'
10
4
4
A
B
4'
4'
22"
22"
22
7

FIG 19D

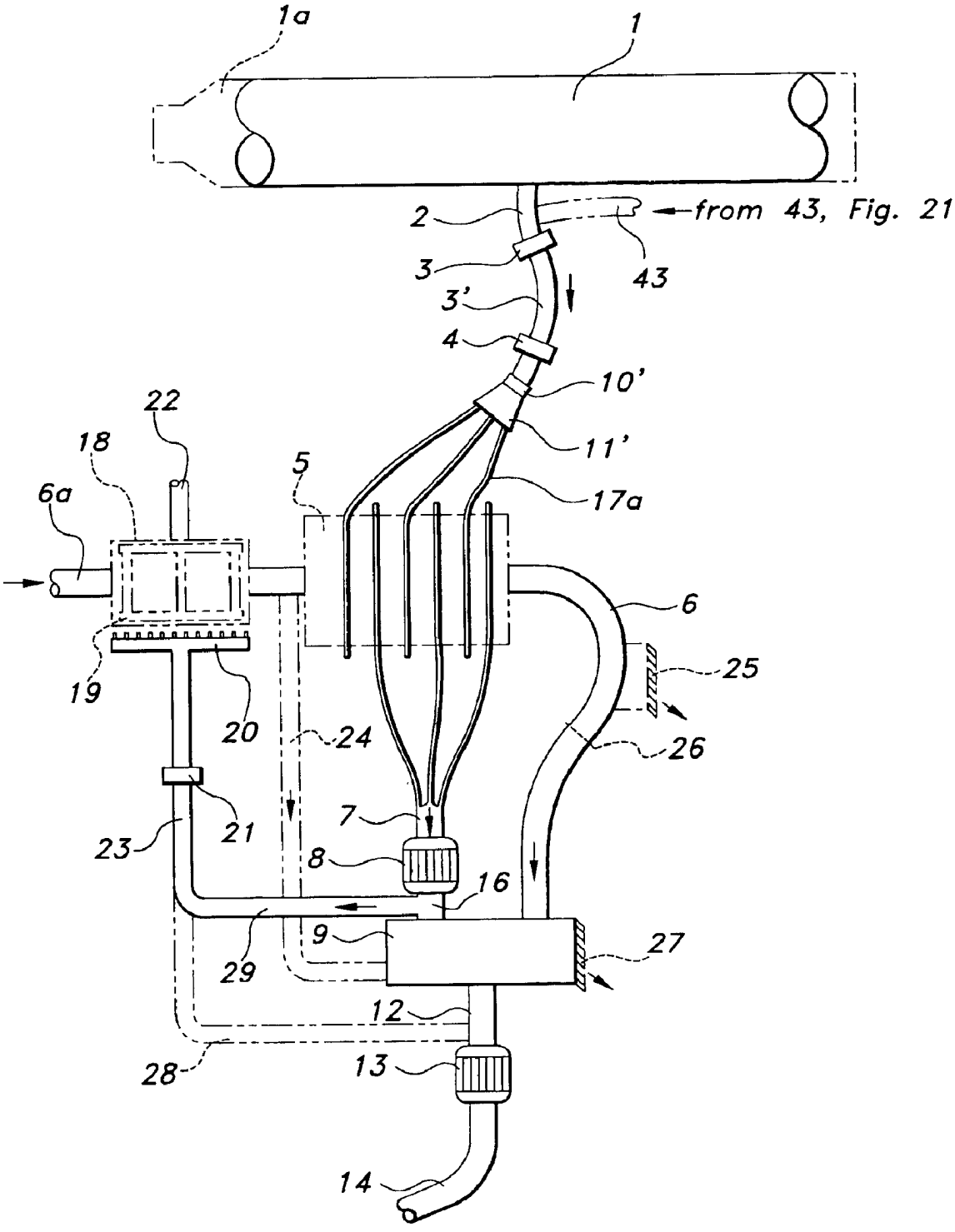
1a
1
2
from 43, Fig. 21
43
3
3'
4
10'
11'
17a
22
18
5
6a
6
25
26
19
20
24
21
23
7
8
16
9
27
29
12
28
13
14

FIG 20

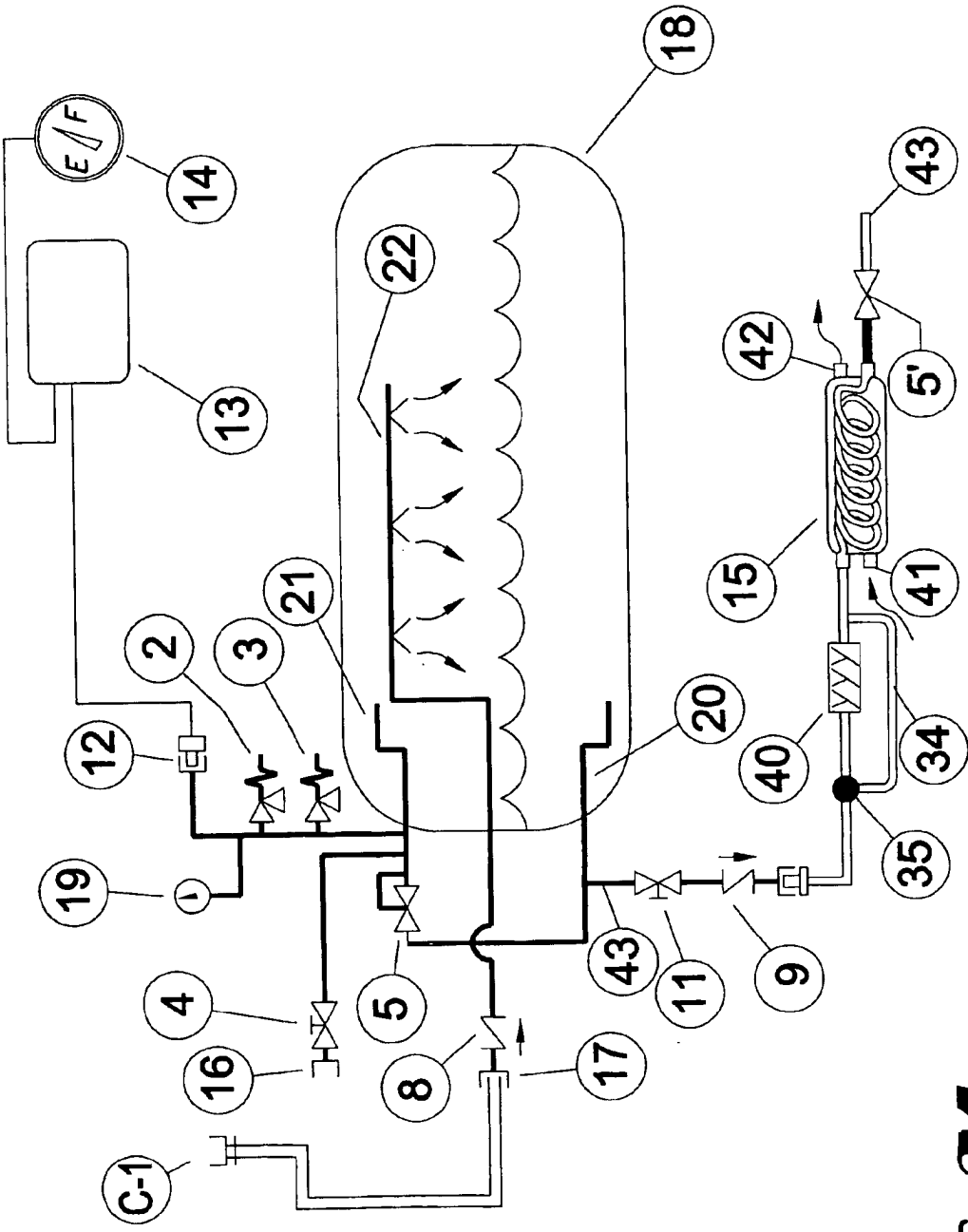

FIG 21

Addendum to Fig. 21

ITEM	DESCRIPTION	FUNCTIONS
2	Secondary Relief Valve	Used to limit pressure in fuel tank.
3	Primary Relief Valve	Used to limit pressure in fuel tank.
4	Manual Vent Valve	Used to vent pressure from the fuel tank.
5	Economizer Regulator	Used to control operating pressure of the fuel tank.
8	Fill Check Valve	Used to prevent reverse flow in the fill line.
9	Excess Flow Valve	Used to restrict excess flow in event of a fuel line breakage.
11	Fuel Shut off Valve	Used to shut off fuel supply.
12	Probe Connection	Used to "feed thru" capacitor signal from tank to fuel sender.
13	Fuel Gauge Sending Unit	Used to convert the capacitance signal for the fuel gauge.
14	Fuel Gauge	Used to display fuel level in the tank.
15	Vaporizer	Used to convert the liquid fuel to gaseous fuel.
16	Vent Connection	Used to connect to the vent line.
17	Filling Connection	Used to fill the LNG fuel tank.
18	LNG Tank	Used to store LNG and supply fuel to the engine.
19	Fuel Tank Pressure Gauge	Used to display fuel tank pressure.
20	Liquid Withdrawal Tube	Used to deliver liquid.
21	Vapor Withdrawal Tube	Used to deliver vapor.
22	Liquid Spray Bar	Used to top fill the tank and collapse the vapor.
C-1	Remote Fill Connection	Used to fill the LNG Fuel Tank.

FIG 22

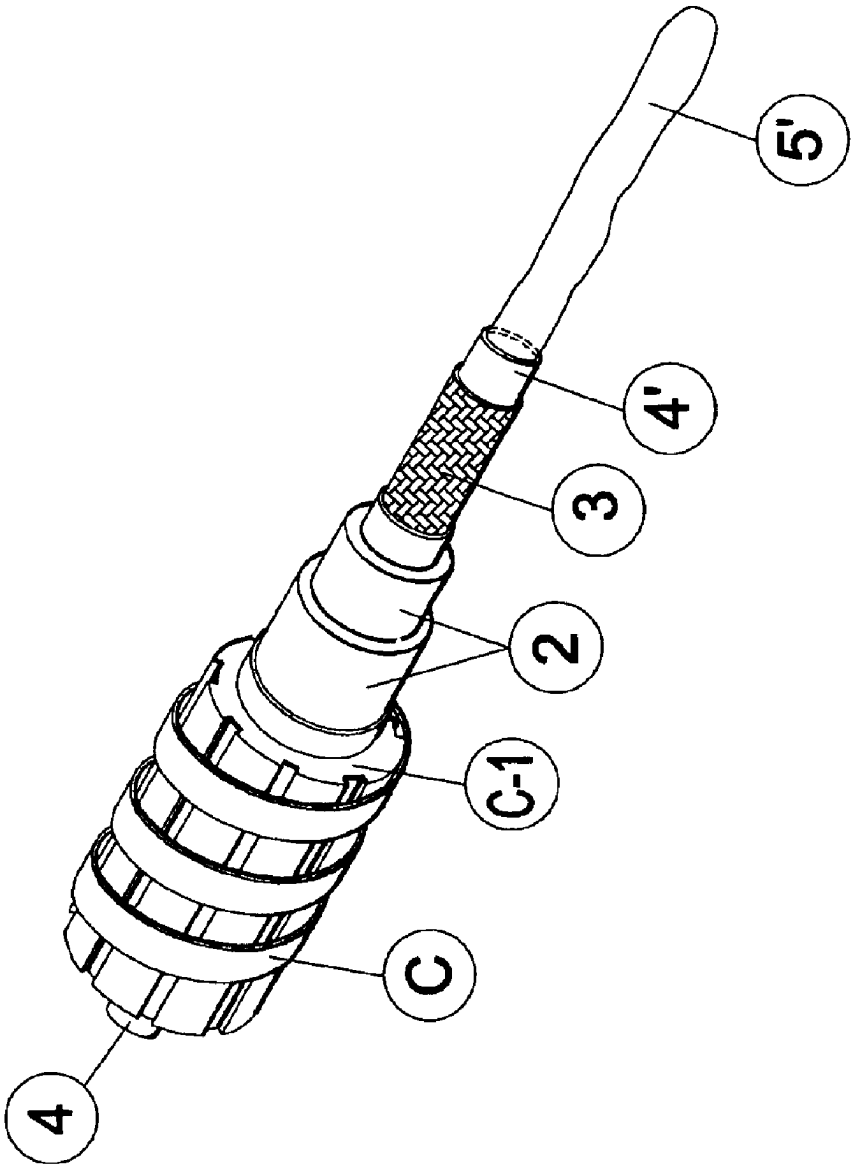

FIG 23

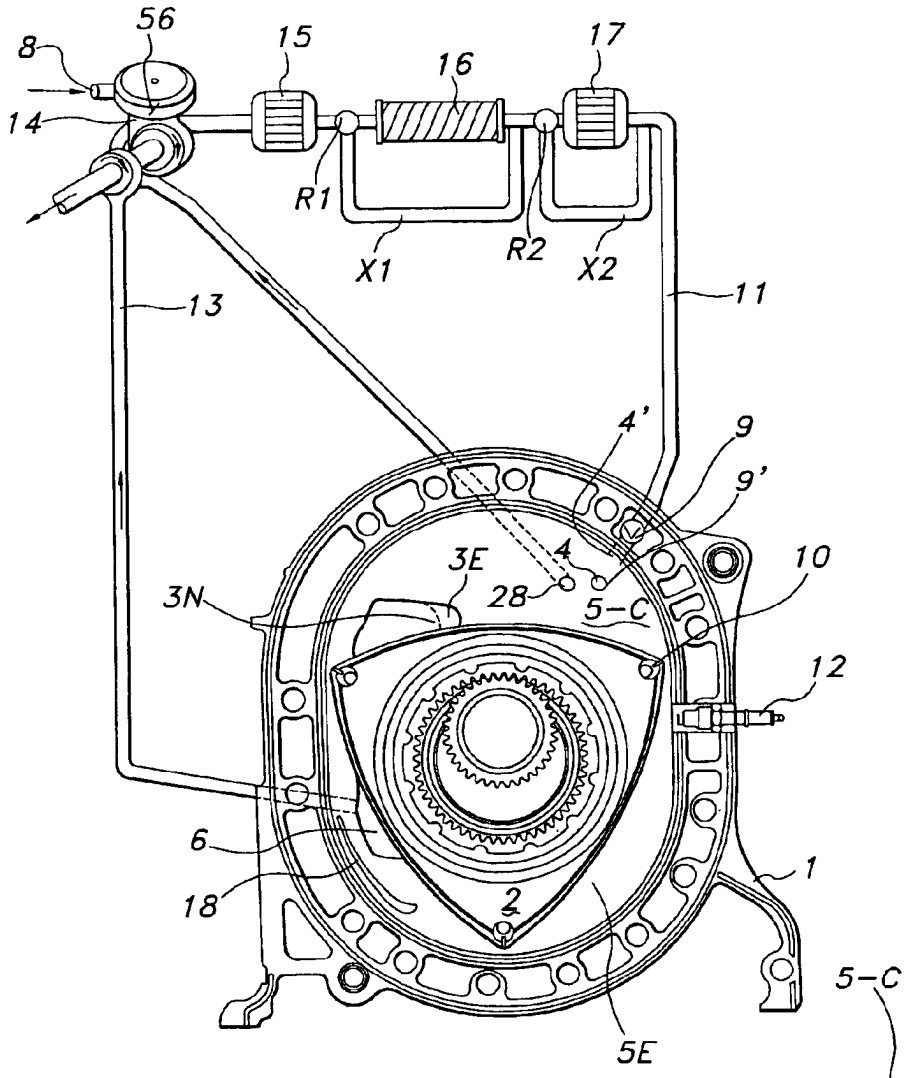

FIG 24

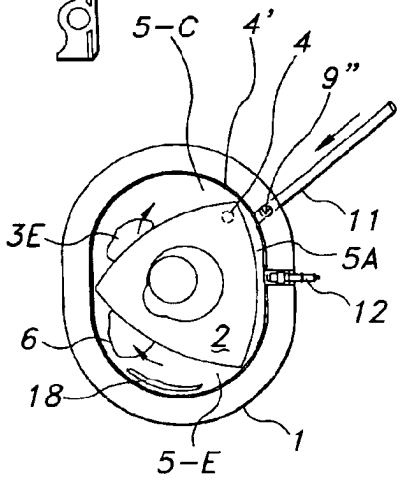

FIG 24B

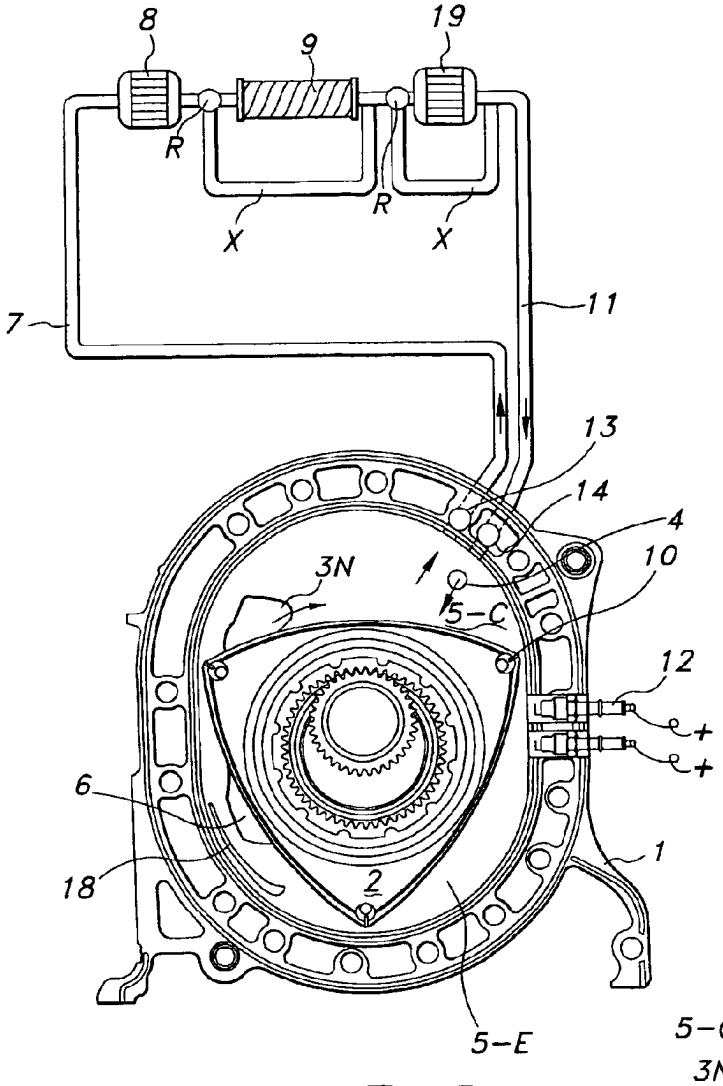

FIG 25

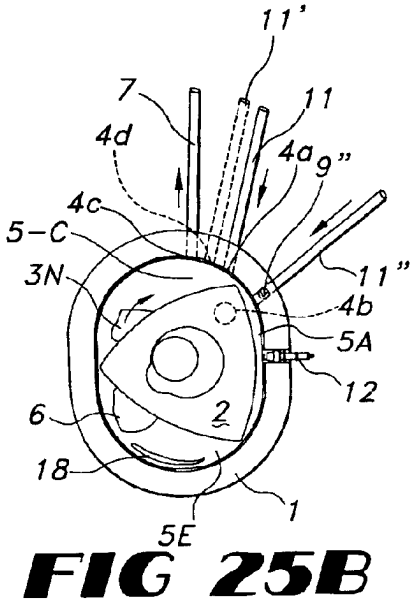

FIG 25B

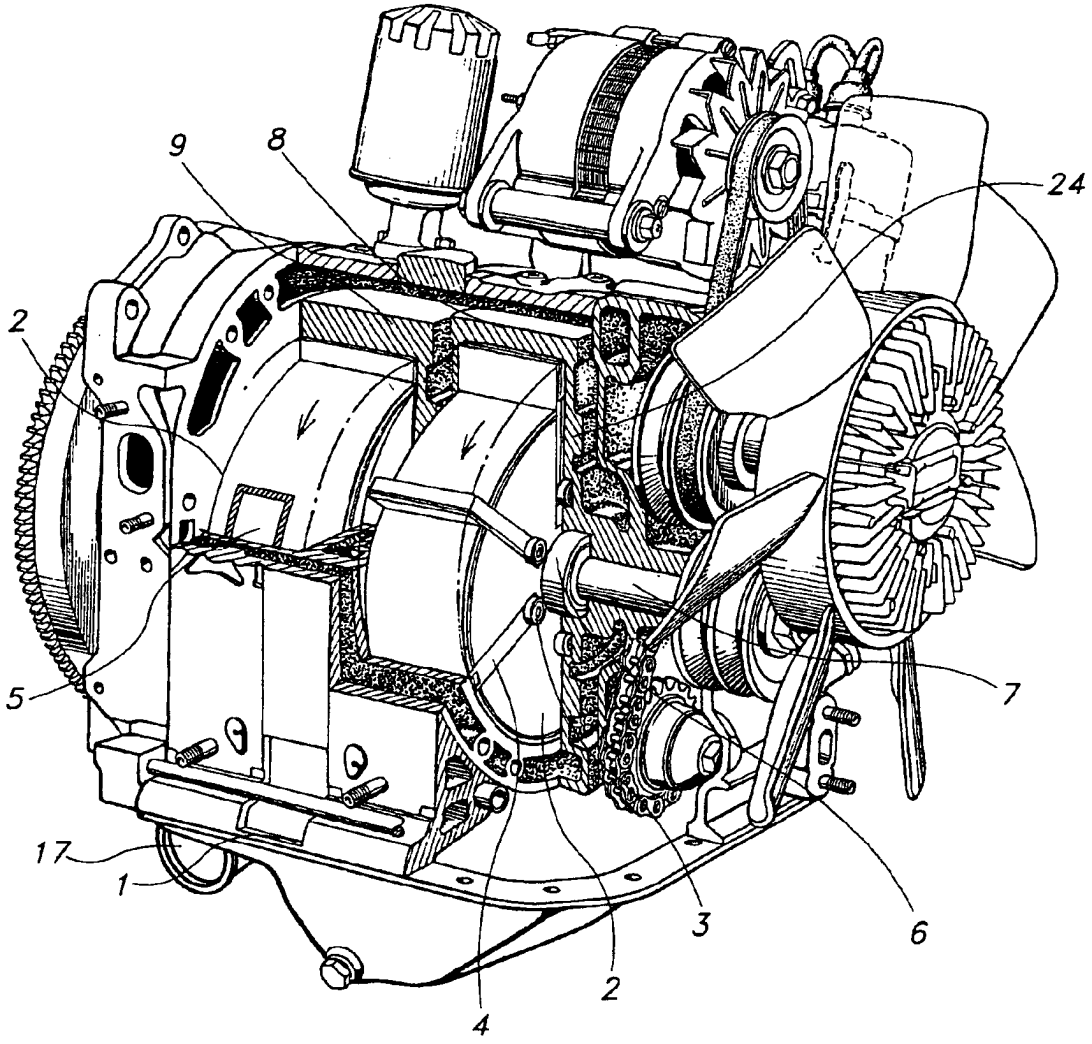

FIG 26

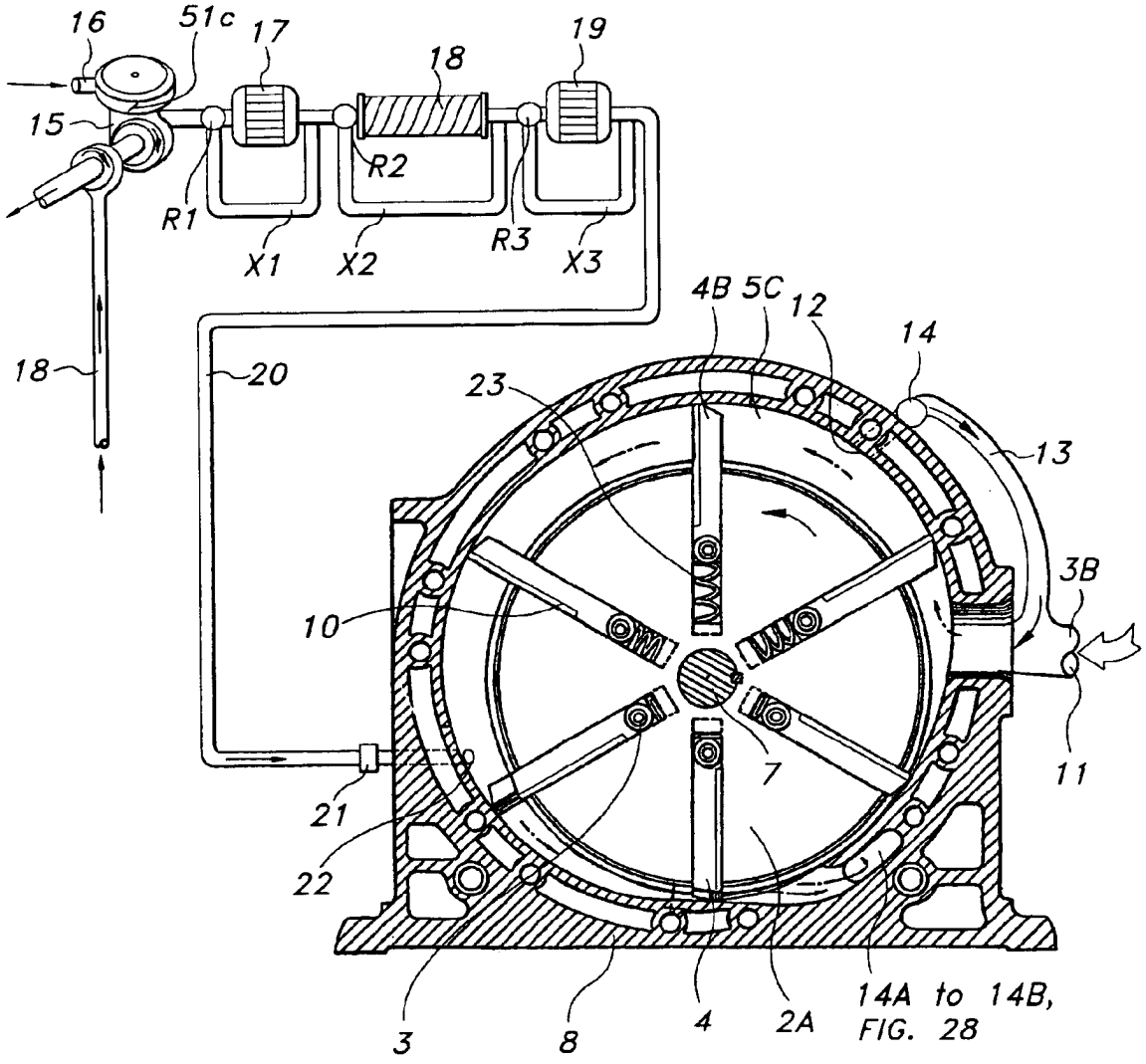
16
51c
17
18
19
15
R2
R1
X1
X2
R3
X3
4B 5C
12
14
18
20
23
13
3B
10
11
7
21
22
3
8
4
2A
14A to 14B, FIG. 28

FIG 27

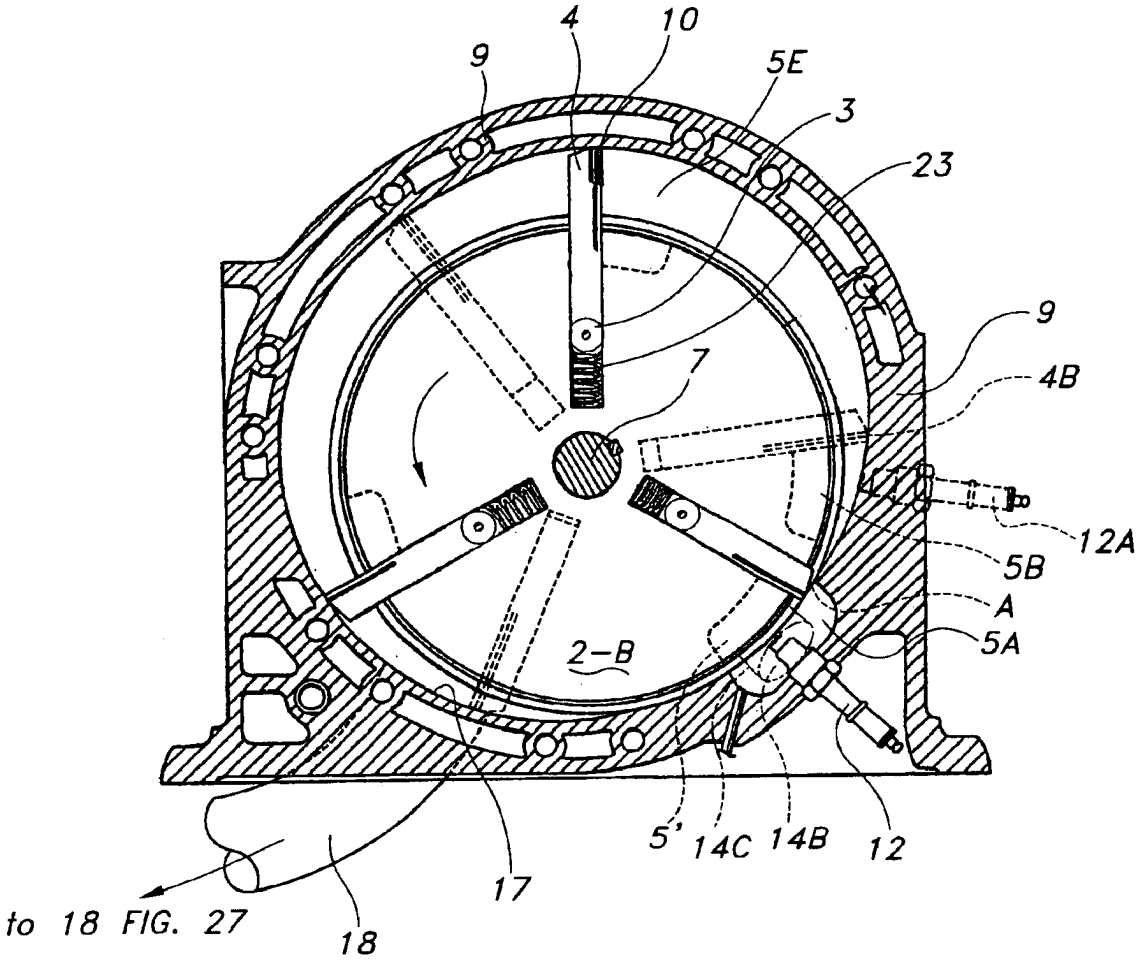

FIG 28

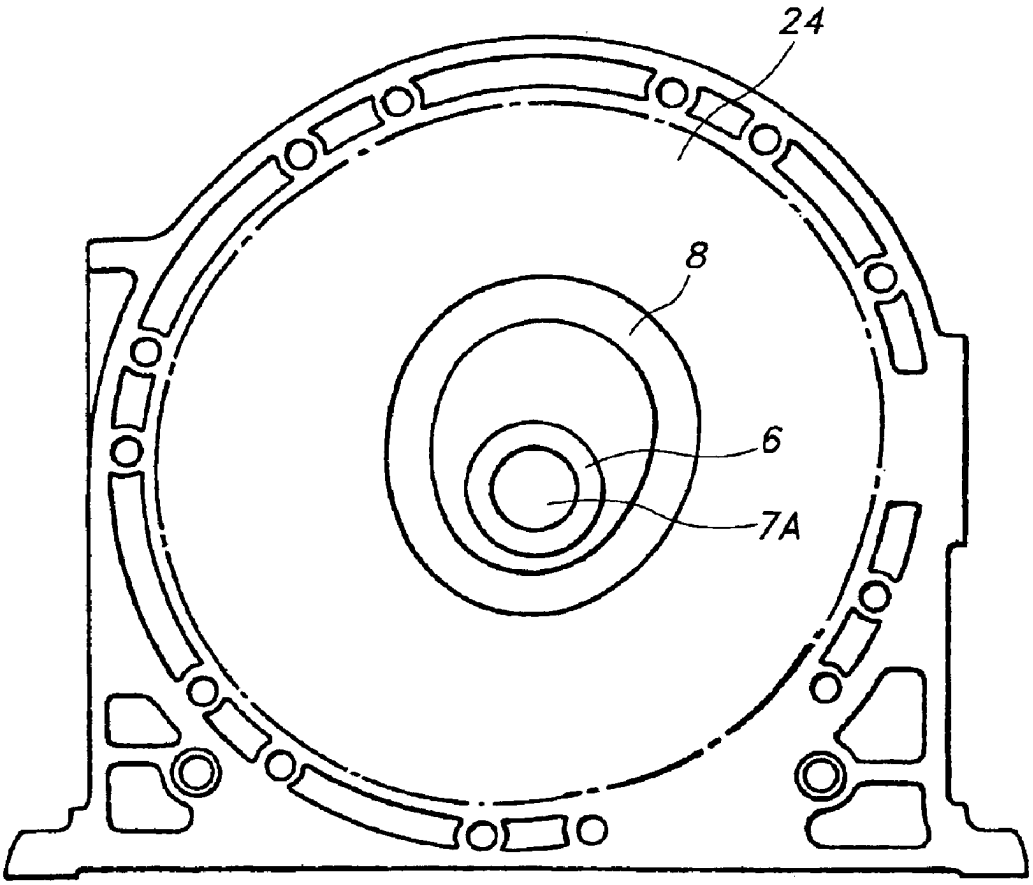

FIG 29

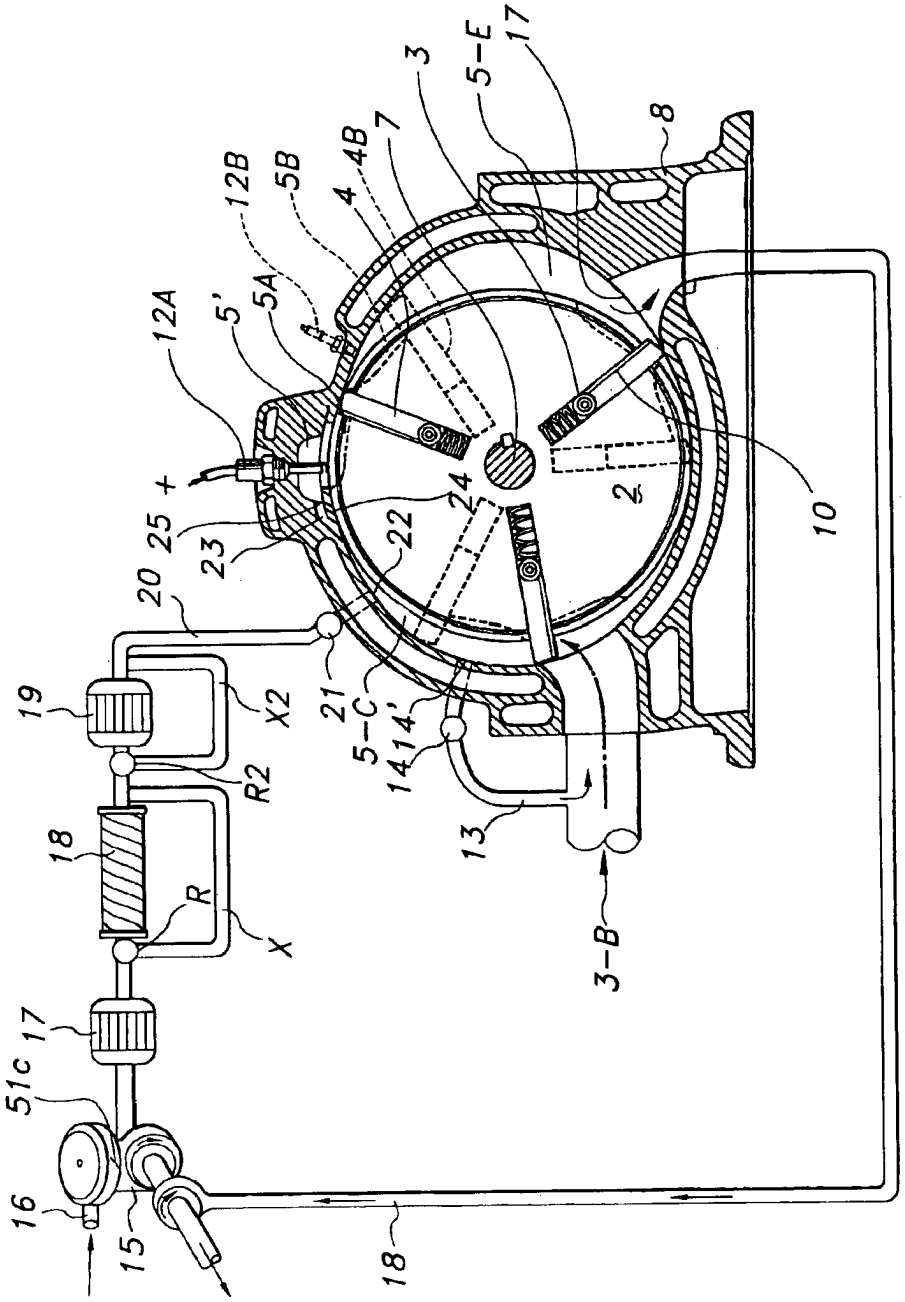
3
5-E
17
8
7
4B
12B
5B
4
5'
5A
12A
25
+
24
2
10
23
22
20
21
5-C
14
14'
19
X2
R2
18
R
X
13
3-B
17
51c
16
15
18

FIG 30

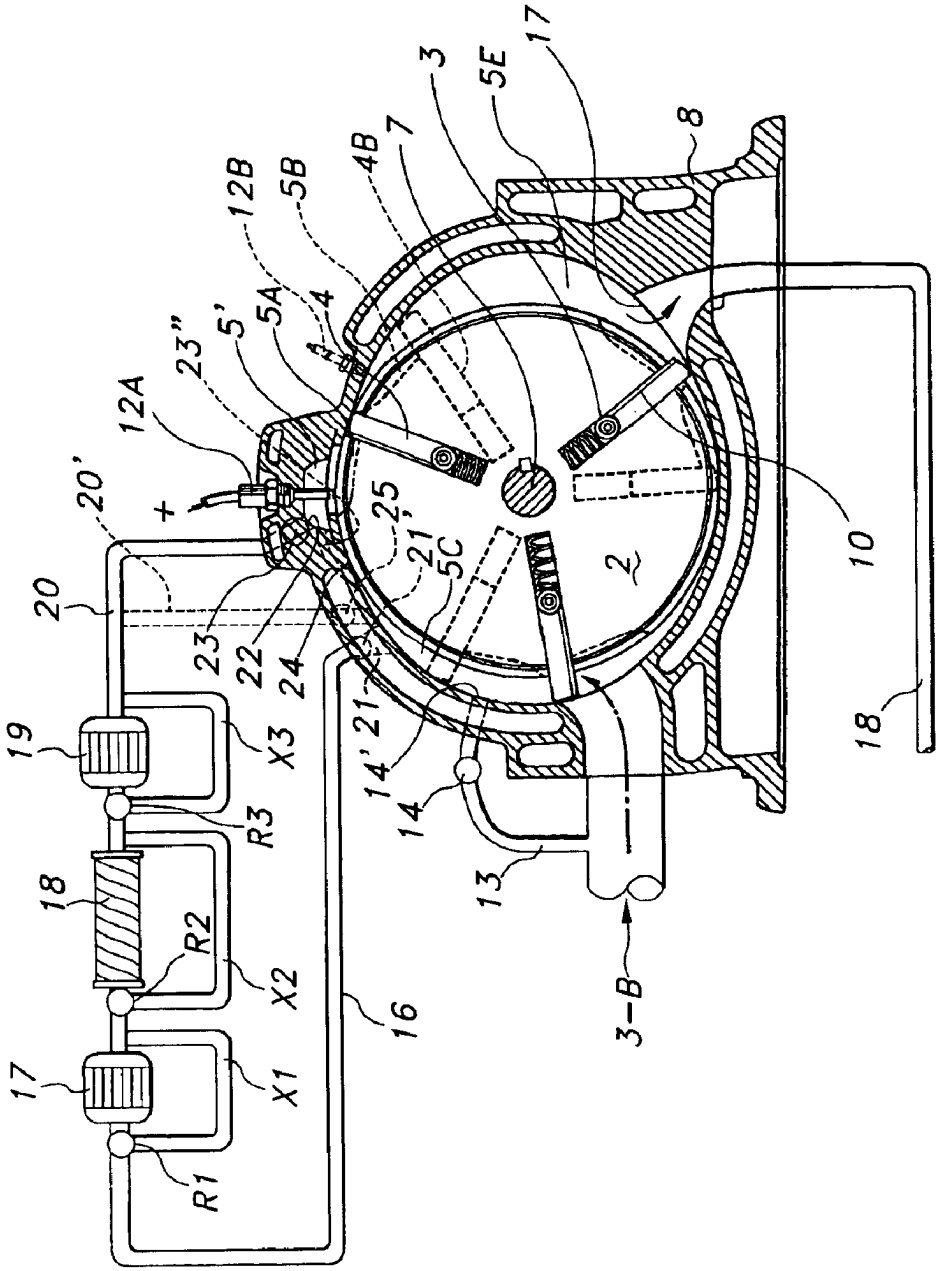
17
3
5E
8
4B
7
12B
5B
5A
4
5'
23"
12A
20'
+
25
21'
5C
2
10
20
23
22
24
14'
21
19
X3
R3
14
18
13
18
R2
X2
3-B
16
17
X1
R1
18

FIG 31

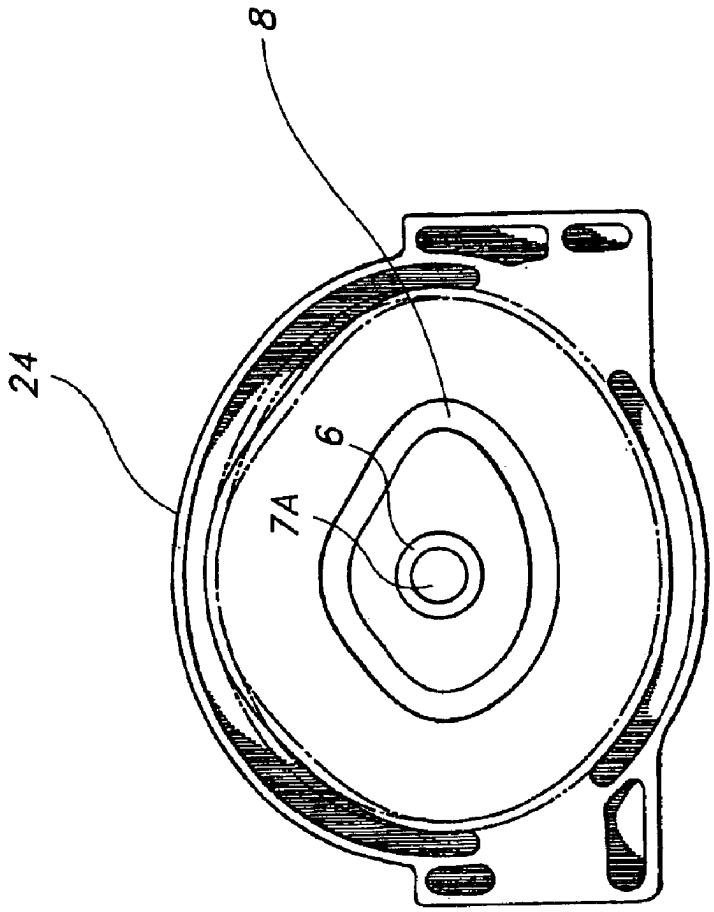

FIG 32

COLD AIR SUPER-CHARGED INTERNAL COMBUSTION ENGINE, WORKING CYCLE AND METHOD

CROSS-REFERENCE TO RELATED APPLICATIONS

This application is a continuation-in-part of application Ser. No. 10/206,847, filed Jul. 26, 2002; which is a continuation-in-part of application Ser. No. 09/632,739, filed on Aug. 4, 2000; which is a continuation of application Ser. No. 08/863,103, filed May 23, 1997, now U.S. Pat. No. 6,279,550; which is a continuation-in-part of application Ser. No. 08/841,488, filed on Apr. 23, 1997 (now abandoned); which application claims the benefit of provisional application Nos. 60/022,102, filed on Jul., 17, 1996; 60/023,460, filed on Aug. 6, 1996; 60/029,260, filed on Oct. 25, 1996; and 60/040,630, filed on Mar. 7, 1997; which is a continuation-in-part of Ser. No. 09/757,772, filed on Jan. 9, 2001 (now abandoned); which application claims the benefit of provisional application No. 60/175,597, filed on Jan. 11, 2000; which is a continuation-in-part of application Ser. No. 10/029,224, filed on Dec. 20,2001 (now abandoned); which application claims the benefit of provisional application Nos. 60/259,727, filed on Jan. 4, 2001; 60/278,030, filed on Mar. 22, 2001; 60/284,711, filed on Apr. 18, 2001; 60/296,620, filed on Jun. 7, 2001; 60/297,663, filed on Jun. 12, 2001; 60/340,728, filed on Oct. 22, 2001; 60/340,609, filed on Dec. 14, 2001; and 60/374,392, filed Apr. 22, 2002.

The present invention constitutes a new working cycle for internal combustion engines, with methods and apparatuses for managing combustion charge density, temperatures, pressures and turbulence (among other characteristics). At least one embodiment describes a cold air super-charged internal combustion engine in which a super-charging portion of air is compressed, cooled or chilled and injected late in the compression process.

Initial air charge for 4-stroke engines and for epitrochoid (Wankel) type rotary and straight rotary engines: A sub-normal compression ratio or a low "effective" compression ratio initial air charge (A) is received on the intake process, which during the compression process, produces only a fraction of the heat-of-compression as that produced by a conventional engine.

Super-charging air: During the compression process, a dense, cooled or chilled supplementary air charge (B) is injected into the engine, adding density and turbulence above that of conventional engines and producing a low compression ratio or a low "effective" compression ratio for this portion of air charge also. Compression of the combined charge continues and near piston or rotor top dead center (TDC) position, the air charge, being mixed with fuel, is ignited for the power pulse, followed by scavenging, air intake and compression process to complete one power cycle.

For 2-stroke engines: In 2-stroke engines, reciprocating, epitrochoid-action or straight rotary, the cold supplementary air charge (B) is injected during the compression process after a low compression ratio engine or a low "effective" compression ratio process engine has been scavenged and charged with fresh air (A). Compression continues and near piston or rotor top dead center (TDC) position, the fuel-air charge is ignited, producing the power pulse, scavenging, fresh air charging and compression process, thus completing one power cycle.

The charge density is selectively much greater than that of state-of-art engines, providing greater power and torque with increased efficiency, while producing ultra low polluting emissions.

BACKGROUND OF INVENTION

It is well known that as the expansion ratio, as compared to charge density of an internal combustion engine is increased, more energy is extracted from the combustion gases and converted to kinetic energy, increasing the thermodynamic efficiency of the engine. It is further understood that increasing air charge density increases both power and fuel economy due to further thermodynamic improvements. The objectives for an efficient engine are to provide a high-density charge, to begin combustion at maximum density and then to expand the gases as far as possible against a piston, vane or rotor lobe.

It is further known that if the air-fuel charge of an engine is homogeneous, the elimination of cycle-to-cycle variations in components, (pressures, air-fuel ratios, temperatures, etc.), will greatly improve engine performance.

It is also well known that if an air-fuel mixture has a high air content, and because fuel is fully mixed with air before combustion, the fuel bums cooler bringing the bum temperature below the threshold at which it would damage the pistons.

It is also an established principle that the lower the temperature of a standard density charge is at the time of ignition, the lower the comparative peak temperature and pressure produced which further reduces polluting emissions, especially NO_X.

Now, the compression ratio of current engine technology sets the level to which a piston "compacts" a mix of air and fuel before the charge is ignited and hence sets the limits of power and efficiency. If the ratio is too high in gasoline or gas engines, the fuel ignites itself as it does in a Diesel engine. Although efficiency is high with a Diesel engine, polluting emissions, including particulates (smoke and nano-particles, all caused by pre-mixed fuel-bum) make it a health hazard.

The engine of this invention is capable of producing the same "compactness" of charge and an even denser charge than that of the Diesel engine, but without having a high compression ratio or producing excessively high temperature. The charge is introduced and managed in such a manner that regardless of the charge density, the temperature of the charge can be kept below auto-ignition temperature of the fuel until the point for ignition. The homogeneous charge then bums cooler and more completely for truly clean power production.

Described herein is a unique engine, which, within its combustion chambers, produces a lighter than normal or denser than normal, temperature-adjusted homogeneous air-fuel mixture. The temperature of the charge is so managed that at 10–15 degrees before piston top dead center (TDC), the charge can be very low and optionally below auto-ignition temperature, and it is at that point that the charge is ignited by spark, heat infusion or heat profusion or by catalyst for high torque, power and efficiency with ultra low polluting emissions.

Gasoline and Natural Gas Auto-Ignition Engine Concept Under Development by Lawrence Livermore National Laboratories (LLNL), et al.

Discussion of a Novel Engine Concept

HCCI is an abbreviation of "Homogeneous Charge Compression Ignition." Scientists have discovered that at some engine speeds and loads, the combustion in internal combustion engines became more stable and that an engine ran

smoother when the fuel was auto-ignited, instead of being ignited by sparkplug. As the name implies, the homogeneous ("well mixed") charge of air and fuel is ignited by compression heat.

Homogeneous Charge Compression Ignition, or HCCI, is a relatively new combustion technology. It is a hybrid of the traditional spark ignition (SI) and the compression ignition process (such as the Diesel engine). A project at the UC Berkeley Combustion Analysis Laboratory (CAL) is to focus on the experimental side of HCCI. Data collected there is being used to validate the computational models generated by engineers at Lawrence Livermore National Lab (LLNL). Entec Engine Corporation, Atlanta, Ga. is an integral part of the continuing effort to make practical an HCCI engine to provide low emission, high efficiency power generation as well as for transportation.

Unlike a traditional SI or Diesel engine, true HCCI combustion takes place spontaneously and homogeneously without flame propagation. This eliminates heterogeneous air/fuel mixture regions. In addition, HCCI is a lean combustion process. These conditions translate to a lower local flame temperature which lowers the amount of NO_X produced in the process. NO_X is a gas that is believed to be responsible for the creation of ozone (O3).

The Principal of the HCCI Engine Concept

As mentioned above, the HCCI-engine can be seen as a hybrid of the SI-engine and the Diesel engine. First, we will describe the SI and Diesel engines.

In the SI-engine, a homogeneous mixture of fuel and air is ignited at the end of the compression stroke by a spark. The spark causes a flame kernel that grows and propagates throughout the combustion chamber. By controlling the mixture flow to the engine with a throttle plate, the engine load (torque) is changed. The mixture ratio between air and fuel is kept almost constant at all loads.

In the Diesel engine, pure air is compressed. The fuel is injected under high pressure at the end of the compression stroke into the hot compressed air. The fuel is vaporized and mixed partially before self-ignition occurs. The load is adjusted by varying the amount of fuel injected.

In the HCCI-engine, homogeneous air-fuel mixture is compressed so that auto-ignition occurs when the piston is near the top dead center position (TDC). A high compression ratio is necessary in order to ensure auto-ignition. Very lean mixtures have to be used in order to get slow chemistry that reduces the combustion rate. Diluted mixtures can be achieved by using a high air-fuel ratio or by Exhaust Gas Recycling (EGR). Varying the amount of fuel controls the load. Like the Diesel engine, there is no throttle plate i.e., the engine will always get maximum amount of air flow as-the engine is un-throttled.

Advantages of the HCCI Engine

The HCCI-engine is always un-throttled. A high compression ratio is used and the combustion is fast. This provides high efficiency at low loads, compared to a SI-engine that has low efficiency at part load. According to computational models generated by engineers at LLNL, an HCCI engine will reduce fuel consumption to one half of that in an ordinary automobile engine. The formation of nitrogen-oxides is strongly dependent on combustion temperature. Higher temperature gives higher amounts of NO_X. Therefore, since the combustion charge is homogeneous and a very lean mixture is used, the combustion temperature becomes very low, which results in very low amounts of NO_X. LLNL predicts that the HCCI engine will also virtually eliminate soot (particulates) and NO_X.

Disadvantages of the Current HCCI Engine Concept as Being Developed by LLNL, et al.

The control of the combustion is more difficult in the HCCI engine than in the SI or Diesel engines. The HCCI engine provides no direct control of the start of combustion. In other words, there is no "triggering" mechanism as a spark or an injection of fuels into a super-hot air-charge, as in conventional engines. The start of combustion depends on several parameters. The strongest ones are the compression ratio and the air charge inlet temperature. Also, there is no means of separately controlling charge density and temperature. By adjusting these parameters in "the right way," it is possible to control the start of combustion to a desired moment. Another current disadvantage in their concept is high levels of hydrocarbons (HC), which is unburned fuel. The low combustion temperature causes the fuel to burn incompletely.

Potential of the Current HCCI Engine Concept

An appropriate field of operation is power plants where the engines operate with constant speed. Present concepts of the HCCI-engine would compete favorably with natural gas driven SI-engines due to the higher efficiency and lower NO_X emissions. One interesting concept would be to use HCCI combustion at part load conditions and SI combustion at high loads in a car engine. In this way, the fuel consumption would be reduced significantly. Researchers say if the emissions standards should rise and the problem with the HC emissions could be solved, the HCCI engine would be able to compete favorably with the Diesel engine, since the Diesel combustion causes high NO_X, soot particulates and other emissions.

Why HCCI?

The modern conventional SI engine, fitted with a three-way catalyst, can be seen as a very clean engine, but it suffers from poor part load efficiency. As mentioned earlier, this is mainly due to the throttling. Engines in passenger cars operate most of the time at light and part load conditions. For some shorter periods of time, at overtaking and acceleration, they run at high loads, but they seldom run at high loads for any long periods. This means that the overall efficiency at normal driving conditions becomes very low.

The Diesel engine has a much higher part load efficiency than the SI engine. Instead, the Diesel engine fights with great smoke and NO_X problems. Soot (particulates) is mainly formed in the fuel rich regions and NO_X in the hot stoichiometric regions. Due to these mechanisms, it is difficult to reduce both smoke and NO_X simultaneously through combustion improvement. Today, there is no well working exhaust after treatment that takes away both soot and NO_X.

The HCCI engine has much higher part load efficiency than the SI engine and is comparable to the Diesel engine. It has no problem with NO_X and soot (particulates) formation like the Diesel engine. In summary, the HCCI-engine beats the SI engine regarding the efficiency and the Diesel engine regarding the emissions.

The foregoing discussion of the anticipated operating features show that when the HCCI system is successfully developed, according to the present plans of various labs and

engine research groups, it will have a low-density air charge for low efficiency and power for diesel fuel, but will be clean burning and have the efficiency of the Diesel engine if using gasoline or natural gas fuel.

Advantages of the Engine of this Present Invention, the Gasoline, Natural Gas, Hydrogen & New Diesel Fueled, Spark or Auto-Ignition Engine

The present invention described herein promises to make practical the HCCI-engine and provides all of the hoped for advantages stated for the futuristic HCCI-engine concept. In addition, the present invention provides many other engine improvements not anticipated for the HCCI-engine e.g., greater power and efficiency for diesel operation, whether ignited by spark or as an HCCI engine.

The engine of this present invention provides a homogenized air-fuel charge, which can always be much denser than that of the Diesel engine and, in some designs, has an extended expansion ratio, yet with compression temperatures lower than those which would cause auto-ignition prematurely. It can be ignited by spark, compression, modified HCCI or true HCCI. Other advantages are no-knock operation, multi-fuel capabilities, double burning "dwell" time near TDC with improved power, torque, efficiency and durability and greatly reduced NO_X, CO, CO_2, formaldehyde, HC and particulates. Knock-free operation allows reduction or elimination of the gasoline additive methyl tertiary-butyl ether (MTBE) which is currently polluting ground water.

The present invention describes a means of selectively managing the density, pressure and temperature of an air or air-fuel charge with each feature being separately adjustable with regard to the other features. This selective management provides the same reduction in NO_X, particulates and other polluting emissions as projected for HCCI, while providing greater power, efficiency and engine durability.

The density of the final air-fuel charge can be much greater even than that of the Diesel engine and yet has a temperature low enough to prevent knock or pre-auto-ignition. For example, natural gas-air mix auto-ignites at a compression ratio of 19:1 or 20:1, while diesel fuel-air mix auto-ignites at the temperature produced by a compression ratio of about 8:1. Therefore, using diesel fuel in a HCCI engine, under development by LLNL, et al., would greatly reduce its efficiency and power. But, in the present invention, the charge can be "compacted" to an effective compression ratio of as much as 40:1 or greater, with a temperature lower than that normally produced by an 8:1 compression ratio. The engine of this invention can then ignite the charge for greater than "Diesel" power and efficiency.

Currently, according to researchers, the greatest problems in making the HCCI engine feasible are timing of ignition and the problem of temperature control in regard to compression ratio. In their HCCI engine concept, the temperature of the compressed charge can not be kept low, thus severely limiting power and efficiency in HCCI for all fuels. The present invention allows the control of the temperature and density of the charge separately, for much greater steady-state power density and fuel economy, with ultra-low emissions and timely ignition control for all fuels, liquid or gaseous.

Described herein are several alternate means of timely igniting the charge of the present invented engine e.g., a) spark ignited, b) compression ignited, c) by modified HCCI, and d) by true HCCI operation.

SUMMARY OF THE INVENTION

Briefly described, the present invention comprises an internal combustion engine system, (including methods and apparatuses) optionally operating in a first mode and, optionally and selectively, in a second mode and optionally in a preferred third mode for managing combustion charge densities, temperatures, pressures and turbulence in order to produce a true mastery within the power cylinder to increase fuel economy, power, and torque while minimizing polluting emissions. In its preferred embodiments, the method includes the steps of (i) producing a primary air charge and optionally, a secondary air charge (ii) controlling the temperature, density and pressure of the air charges, (iii) transferring an air charge to a power cylinder of the engine in one stage for mode 1 operation and in two stages for mode 2 and mode 3 operation. The primary air charge is supplemented by the secondary air charge in producing mode 2 and mode 3 operation. This system is such that an air charge having a weight and density selected from a range of weight and density levels, ranging from less than atmospheric weight and density to a heavier-than-atmospheric weight and density, is introduced into the power cylinder, and (iv) then compressing the air charge at a normal, or a lower-than-normal compression ratio, (v) optionally introducing a secondary air or air-fuel charge into the same cylinder during the compression stroke, (vi) compressing the total charge, (vii) causing a pre-determined quantity of charge-air and fuel to produce a combustible mixture, (viii) causing the mixture to be ignited within the power cylinder and (ix) allowing the combustion gas to expand against a piston operable in the power cylinder with the expansion ratio of the power cylinder being equal to, or substantially greater than the compression ratio of the power cylinders of the engine. In addition to other advantages, the invented method is capable of producing mean effective [cylinder] pressures (mep) in a range ranging from lower-than-normal to higher-than-normal. In the preferred embodiments, the mean effective cylinder pressure is selectively variable (and selectively varied) throughout the mentioned range during the operation of the engine. In an alternate embodiment related to constant speed operation, the mean effective cylinder pressure is selected from the range and the engine is configured, in accordance with the present invention, so that the mean effective cylinder pressure range is limited, being varied only in the amount required for producing the power, torque and RPM of the duty cycle for which the engine is designed.

In its preferred embodiments, the apparatus of the present invention provides a reciprocating internal combustion engine with at least one atmospheric air intake port for providing charge air to two different cylinder inlet ports at different pressures. The apparatus also provides at least one ancillary compressor for pre-compressing a portion of the air charge, an intercooler, or heat exchanger, through or around which, the compressed air can be directed for temperature adjustment. The apparatus further provides power cylinders in which the combustion gas is ignited and expanded, a piston operable in each power cylinder, connected to a crankshaft by a connecting link for rotating the crankshaft in response to reciprocation of each piston and a transfer conduit communicating the compressor outlet to a control valve and to the intercooler or heat exchanger. Also provided is a transfer manifold communicating the intercooler, or bypass system, with the power cylinders, through which manifold the compressed charge is transferred to enter the power cylinders. The apparatus further provides one intake port or valve controlling admission of the low pressure (primary) air charge to the power cylinder, an intake valve

controlling admission of the compressed (secondary) charge from the transfer manifold to said power cylinders, and an exhaust valve controlling discharge of the exhaust gases from said power cylinders.

For the 4-stroke engine of this invention, one of two intake valves of the power cylinders is timed to operate so that a charge of air, which is lighter, equal to, or heavier than normal, can be received and maintained within a transfer manifold, when required. This charge of air can then be introduced into the power cylinder during the intake (primary) piston stroke with the intake valve closing at piston BDC, or closing substantially before piston BDC position or with the intake valve closing at some point after BDC, or near the end of the compression stroke to provide, in a first mode of operation, either a normal, a low, or a zero compression ratio. This establishes that the expansion ratio can be equal to or greater than the compression ratio of the power cylinders. In this design, in a second mode or third mode of operation, a second intake valve can open during the intake stroke or preferably during the compression stroke, or as late as near TDC, at the point or after the piston has reached the point where the first intake valve closes on either the intake or the compression stroke and closes quickly in order to inject a temperature adjusted high-pressure secondary air charge.

Mode 1 Operation: The 2-stroke engine of this invention, also operating in optional triple modes, introduces lightly compressed scavenging and charging air into primary ports at piston BDC and is the sole air charge in mode 1 operation.

For mode 2 or mode 3 operation, the intake valves of the power cylinders are timed to operate so that a high pressure supercharging air charge is cool and maintained within the transfer manifold, alternatively expansion chilled, and introduced into the power cylinder, during or near the end of the compression stroke, at such a time that the power cylinder has been scavenged and charged by air received from ports which are now closed and the exhaust valve has closed normally or late. This establishes that the expansion ratio of the engine can be equal to or greater than the compression ratio of the power cylinders. Means are provided in both 4-stroke and 2-stroke for causing fuel to be mixed with the air charge to produce a combustible mixture. The combustion chambers of the power cylinders are sized with respect to the displaced volume of the power cylinder in some designs to produce an initial low compression ratio so that the exploded combustion gas can be expanded to a volume equal to the compression ratio of the power cylinder of the engine.

In other 2-stroke designs, the exhaust valve is closed late in order to produce an expansion ratio greater than the "effective" compression ratio.

For mode 3 operation, modes 1 and 2 are combined.

For both 4-stroke and 2-stroke engines, fuel being present, ignition of the charge occurs at near piston TDC and the power pulse occurs as fully described hereafter.

Some of the advantages of the present invention over existing internal combustion engines are, as stated earlier, that it can provide a normal compression ratio or an "effective" compression ratio lower than the expansion ratio of the engine and can selectively provide a mean effective cylinder pressure higher than the conventional engine arrangement with the same or lower maximum cylinder pressure and temperature than that of prior art engines. In addition, the invention, in some designs, alternatively provides for double the burn time over existing engines by providing "Dwell"-burn time at piston TDC.

Because charge density, temperature and pressure are managed separately, light-load operation is practical, even for extended periods, with no sacrifice of fuel economy. The new working cycle is applicable to 2-stroke or 4-stroke engines, spark-ignited, compression-ignited and modified or true HCCI. For all engines, the weight of the charge can be greatly increased without the usual problems of high peak temperatures and pressures with the usual attendant problem of combustion detonation and pre-ignition. (Even in compression-ignited Diesel engines, a heavier, cooler, more turbulent air charge provides low peak cylinder pressure for a given expansion ratio and allows richer, smoke-limited air-fuel ratio giving increased power with lower particulate and NO_X emissions.) Modified HCCI or true HCCI operation will provide greater than "diesel efficiency", using gasoline, natural gas, hydrogen or diesel fuels, while limiting NO_X and particulate emissions (both smoke and nano-particle) but with diesel and hydrogen fuel performance being most benefited. Compression work is reduced due to reduced heat transfer during the compression process. Engine durability is improved because of an overall cooler working cycle and a cooler than normal exhaust and, in some duty cycles, by lower RPM, allowed by greater torque. Due to the ability to greatly increase air-fuel charge density and turbulence, even above that of diesel engines, while controlling the temperature and keeping it below auto-ignition temperature using diesel oils, allows spark ignition for diesel type oils, thus eliminating smoke particles and NO_X.

All of the objects, features and advantages of the present invention cannot be briefly stated in this summary, but will be understood by reference to the following specifications and the accompanying drawings.

BRIEF DESCRIPTION OF THE DRAWINGS

Embodiments of the cold air supercharged internal combustion engines, according to the invention, will now be described, by way of example, with reference to the accompanying drawings.

FIG. **1** is a perspective view (with portions in cross-section) of the cylinder block and head of a six cylinder internal combustion engine. It operates in a 4-stroke cycle, and represents a first embodiment of apparatus of the present invention from which a method of operation can be performed and will be described. Among its other components, this embodiment is seen as having an ancillary high performance compressor, with one atmospheric charge-air intake duct and dual intake air routes, one of which is low pressure and one which is high pressure. Both lead to the same power cylinder, a temperature adjusting system with bypass systems and valves for controlling charge-air pressures, density and temperature.

FIG. **1**C is a schematic view of an exhaust and an air intake system of an engine, showing a means of re-burning exhaust gases or showing a means of directing exhaust gases to an ancillary compressor and temperature adjusting system for use as a charge diluent or as an ignition catalyst.

FIG. **2** is a schematic drawing of a six cylinder, 4-stroke engine representing yet another embodiment of the apparatus of the present invention, from which yet another method of operation can be performed and will be described. FIG. **2** depicts three alternative systems (two in phantom lines) of inducting a low pressure primary air charge, one of which is by dividing the flow of the primary compressor to supply low-pressure air to the engine and to supply a first stage of compression for the high-pressure air supply. Among its

other components, this embodiment is seen as having three air coolers and dual manifolds and the means of controlling the temperature, density and pressure of the charge by an engine control module and by valving variations.

FIG. **2**B is a schematic drawing of a six cylinder, 4-stroke engine, representing yet another embodiment of the apparatus of the present invention, from which yet another method of operation can be performed and will be described. It depicts three alternative systems (two in phantom lines) of inducting a low pressure primary air charge, one of which is by dividing the flow of the primary compressor to supply both low-pressure air to the engine and to supply a first stage of compression for the high-pressure air supply. Among its other components, this embodiment is seen as having three air coolers and dual manifolds and the means of controlling the temperature, density and pressure of the charge by an engine control module and by valving variations. In addition, FIG. **2**B shows schematically another embodiment in which the engines secondary-charge air or air-fuel charge is optionally wholly or partially compression chilled before being introduced to power cylinders **7***a* to **7***f* to provide a cooler charge and lower polluting emissions.

FIG. **2**C is a schematic drawing of a six cylinder, 4-stroke engine, representing yet another embodiment of the apparatus of the present invention, from which yet another method of operation can be performed and will be described. Among its other components, this embodiment is seen as having three air coolers and dual manifolds and the means of controlling the temperature, density and pressure of the charge by an engine control module and by valving variations. In addition, FIG. **2**C shows schematically another embodiment in which the engine primary-charge air or air-fuel charge, or air charge only, is, wholly or partially. thermodynamically (compression) chilled before being introduced to power cylinders **7***a* to **7***f* to provide a cooler charge, greater fuel economy, engine durability and lower polluting emissions. In this design, a cool very dense secondary air charge is introduced during mode 2 operation without any expansion by expansion valves.

FIG. **2**D is a schematic drawing of a six cylinder, 4-stroke engine, representing yet another embodiment of the apparatus of the present invention, also adaptable to 2-stroke engines. It represents another method of operation which can be performed, using alternative systems of inducting a high pressure chilled supercharging air charge, which will be described. Among its other components, this embodiment is seen as having three air coolers and dual manifolds and the means of controlling the temperature, density and pressure of the charge by an engine control module and by valving variations. In addition, FIG. **2**D shows schematically an embodiment in which the engine's sole charge air or air-fuel charge is alternatively, wholly or partially, compression chilled before being introduced to power cylinders **7***a* to **7***f* to provide greater charge density, fuel economy, durability and lower polluting emissions.

FIG. **3** is a part sectional view through one power cylinder of a 4 stroke engine at the two intake valves, showing an alternative method (adaptable to other embodiments of the present invention) of high pressure air charging. Further, it shows a means of better mixing of fuel and air and of passing air between piston and cylinder wall, in order to prevent formation of formaldehyde and CO, of sweeping unburned fuel out of piston ring crevices for reducing HC, and of closing bottom inlet ports by piston movement.

FIG. **4** is a part sectional view through one power cylinder of a 4 stroke engine at the two intake valves, showing an alternative method (adaptable to other embodiments of the present invention) of high pressure air charging and showing another means of mixing fuel and air and of passing air between cylinder wall and piston, in order to prevent formation of formaldehyde and CO. It further shows another method for sweeping unburned fuel out of piston ring crevices and for closing bottom inlet ports while popette valve is closing.

FIG. **5** is a perspective view (with portions in cross-section) of the cylinder block and head of an internal combustion engine, operating in a 4-stroke cycle, and representing a preferred embodiment of the apparatus of the present invention from which a first method of operation can be performed and will be described. Among its other components, this embodiment is seen as having an auxiliary cooling system to alternatively provide engine air cooling or compression-expansion cooling during such time the liquid cooling system, if used, should be damaged.

FIG. **6** is a cross-section of a partial engine block and a cylinder liner. The liner is fitted with air-passageways containing splines or metal screens arranged for air cooling or compression-expansion cooling of the cylinder, also useful for controlling the temperature of charge-air in HCCI system of FIGS. **19**-B, **19**-C and **19**-D.

FIG. **7** is a perspective view (with portions in cross section) of the cylinder block and head, similar to the engine of FIG. **3**, operating in a 4-stroke cycle and representing a second embodiment of the apparatus of the present invention, from which a second method of operation can be performed and will be described. Among its other components, this embodiment is seen as showing a means of controlling engine temperatures by pumping air or compression-chilled air throughout passages in the engine, at such time liquid cooling system, if used, has failed. A system, similar to FIG. **3**, is shown for mixing air charge and for preventing formaldehyde, CO and unburned fuel (HC).

FIG. **8** is a perspective view (with portions in cross-section) of the cylinder block and head of an internal combustion engine, operating in a 2-stroke cycle, and representing a first 2-stroke embodiment of the apparatus of the present invention, from which still another method of operation can be performed and will be described. Among its other components, this embodiment is seen as having high pressure inlet valve to cylinder and also inlet scavenging and charging cylinder ports leading from a low-pressure air-compressor and having an air or a compression-expansion cooling system and conduits and valves to adjust engine temperature according to the invention.

FIG. **9** is a perspective view (with portions in cross-section) of the cylinder block and head of an internal combustion engine operating in a 2-stroke cycle, and representing a second 2-stroke embodiment of the apparatus of the present invention, from which still another method of operation of can be performed and will be described. Among its other components, this embodiment is seen as having an automatic valve and means for closing bottom scavenging and charging inlet ports and upper inlet port, while the popette intake valve is closing. In addition, it is seen as having one high pressure charge-air route to a power cylinder to supply supplementary charge air after compression has begun. Also shown is a common air-rail and cylinder port leading from a compressor (not shown) with low pressure air intake ports and Roots type compressor (not shown) to a power cylinder for scavenging and receiving primary charging air to the cylinder at piston turn around. It is also seen as having an exhaust valve and conduits to the

atmosphere from the power cylinder and having control valving means and compressed air expansion cooler system for auxiliary cooling the engine at such time that any liquid cooling system might be compromised.

FIG. **10** is a part sectional view through one power cylinder of a 2-stroke engine at the intake and exhaust valves, showing an alternative method (adaptable to other embodiments of the present invention) of injecting a secondary air charge during or near the end of the compression stroke, for increasing charge density and for sweeping out unburned HC and formaldehydes. It also shows an alternative method for preventing charge-air back flow, for automatically adjusting the charge pressure-ratio of the cylinder during the air charging process. There is also shown means for providing auxiliary engine cooling during any loss of engine liquid coolant. There is also shown inlet ports from a Roots type compressor (the compressor is not shown) for scavenging and supplying primary charging of the cylinder at the piston turn-a-round.

FIG. **11** is a schematic view of a six cylinder engine having both low and high pressure charge air supplied by one or two stages of compression and the pressure being amplified by a pressure amplifier. It illustrates how one compressor and a pressure amplifier can supply both low, or low boosted, and high pressure air, for operation of a constant speed engine of this invention, such as for power generation, pumping, etc.

FIG. **11**-B is a schematic view of a six cylinder engine having both low and high pressure charge air, supplied by one or two stages of compression by ordinary compressors, and the pressure then being amplified by a pressure amplifier. This illustrates how one compressor and a pressure amplifier can supply low or low boosted, and high pressure air for operation of a constant speed engine of this invention, such as for power generation, pumping, etc. FIG. **11**-B further illustrates partial or whole compression-expansion chilled cooling of supplementary charge air for the engines of this invention or charge air for any Otto or Diesel Cycle or turbine engine.

FIG. **12** is a pressure—volume diagram (a compilation of four diagrams) of a high speed diesel engine compared to the extended expansion process engines of this invention. These diagrams show three stages of intercooled compression and a fourth stage of uncooled compression.

FIG. **13** is a schematic transverse sectional view of a pre-combustion chamber, a combustion chamber, associated fuel and air inlet ducts, and inlet and exhaust valving, suggested for gaseous or liquid fuel operation for the engine of this invention or for any other internal combustion engine.

FIG. **14** is a part sectional view through one cylinder of an engine, showing an alternate construction, whereby there is supplied two firing strokes each revolution of the shaft for a 2-stroke engine and one firing stroke each revolution of the shaft for a 4-stroke engine. This engine has a beam which pivots on its lower extremity, a connecting rod which is joined mid-point of the beam and is fitted to the crankshaft of the engine, whereby a means is provided for varying the compression ratio of the engine at will.

FIG. **15** is a part sectional view through one cylinder of an engine, showing an alternate construction, whereby there is supplied two firing strokes each crankshaft revolution for a 2-stroke engine and one firing stroke each revolution of the shaft for a 4-stroke engine. A beam connecting the connecting rod and the piston pivots at a point between the piston and the piston connecting rod, which is attached to the crankshaft of the engine. Also shown is an alternate preferred means of power take-off from the piston by a conventional piston rod, cross-head and connecting rod arrangement.

FIG. **16** is a part sectional view through one cylinder of an engine, showing a means of providing extra bum-time each firing stroke in a 2-stroke or 4-stroke engine.

FIG. **17** is a schematic drawing, representing any of the engines of the present invention depicted in an alternate embodiment, which is configured to operate as a constant speed engine. This constant speed engine embodiment of the present invention is shown as including both a primary and an ancillary compressor with optional intercoolers for providing two stages of pre-compressed charge air, either optionally intercooled or adiabatically compressed.

FIG. **17**-B is a schematic drawing representing any of the engines of the present invention, depicting a constant-speed engine in accordance with an alternate embodiment of the present invention, in which there is provided a single compressor with optional intercoolers, providing a single stage of pre-compressed charge-air, either optionally intercooled or adiabatically compressed

FIG. **18** illustrates a variant design of the split-cycle engine, in which a primary charge at boosted or atmospheric pressure air can supply two more stages of compression, one in the firing cylinder, another in an ancillary compressor. The charge in the compressor is temperature adjusted and then injected into the power cylinder during the last part or the end of the compression stroke near TDC or even during combustion.

FIG. **18**-B illustrates a variant design of the split-cycle engine, in which a primary charge at boosted or atmospheric pressure air can supply two more stages of compression, one in the firing cylinder, another in an ancillary compressor, whose charge is temperature adjusted and then injected into the power cylinder during the last part or near the end of the compression stroke or even during combustion. In addition, this figure illustrates a compression-expansion chill cooling system for alternative partially or wholly chilling the charge air or air-fuel for greater density, lower polluting emissions and improved engine durability.

FIG. **18**-C illustrates a variant design of the split-cycle engine that provides a primary air charge at boosted or atmospheric pressure. The engine supplies two more stages of compression, with the two final compression stages being accomplished within the cylinder whose charge is intermittently cooled, then re-injected into the power cylinder, during the last part of the compression stroke, providing a low effective compression ratio with very dense air charge and an extended expansion ratio.

FIG. **18**-D illustrates schematically the operation of the engine of FIG. **18**-C.

FIG. **18**-E illustrates the valve layout of the power cylinder of the engine of FIG. **18**-C.

FIG. **19** is a schematic transverse sectional view of a preparation or pre-combustion chamber and a combustion chamber with associated heating elements, inlet conduits, injector pump, ducts, and valving for air and/or fuel suggested for gaseous or liquid fuel operation for the engines of this invention or for any other internal combustion engine for providing spark or compression ignition, modified HCCI, or true HCCI operation.

FIG. **19**-B is a schematic transverse sectional view of a pre-combustion chamber and a combustion chamber with associated inlet conduits, ducts and valving for optional compression-expansion chill air cooling and/or water cool-

ing as well as optional electric heating elements and fluid conduits, having the purpose of producing and controlling charge temperatures to facilitate homogeneous charge compression ignition (HCCI) for the engines of this invention or for any other internal combustion engine and for facilitating spark, or compression ignition or modified HCCI in any engine.

FIG. **19**-C illustrates a hemispheric-plus (perhaps 300 degrees, more or less), shaped combustion chamber **38**-B, containing all of the conduits, ducts, valves and controls pictured and described for FIG. **19**-B which are operated and controlled in the manner suggested for FIG. **19**-B system. The shape of the combustion chamber allows control of charge temperatures by the charge being surrounded by combustion chamber **38** and piston crown.

FIG. **19**-D illustrates a hemispheric-plus (perhaps 300 degrees, more or less) shaped combustion chamber **38**-B containing all of the conduits, ducts, valves and controls pictured and described for FIG. **19**-C which are operated and controlled in the manner suggested for FIG. **19**-C system. The shape of the combustion chamber allow control of charge temperatures by the charge being surrounded by combustion chamber **38**-B and piston crown. Piston projection performs the last stage of compression for auto-ignition of fuel-air charge in HCCI system.

FIG. **20** is a schematic drawing, depicting a new co-generation system, providing means of extracting work from compressed natural gas (CNG), or hydrogen (CH_2), or any other compressed gas, when contained at high pressure in a storage tank or pipeline. Illustrated is a means of utilizing gas (in this case CNG or CH_2), pressure-drop-distributor and evaporator tube(s) to expand the gas, to provide (compression) chilling for a refrigerator or air conditioner and to chill charge air for internal combustion engines or for a rotary turbine. When the gas is flammable, the expanding gas is then collectively directed, by separate distribution tubes, to where the gas is combusted to power an internal combustion engine, rotary turbine, or gas fired absorption chiller, or to heat a furnace for a steam turbine, or for a space heater or any other purpose needed.

FIG. **21** is a schematic drawing, depicting a means of preparation and presentation of liquefied gases for the extraction of work from either liquefied natural gas (LNG), hydrogen (LH_2) or any liquefied gas. The boil-off gas from the top of the tank or boil-off gas from a container of pumped LNG or LH_2 is directed to send the LNG or LH_2 through outlet conduit **43** to inlet **4** of flexible duct **4'**—FIG. **23** to first cool superconductor electric cable **3** or directly to conduit **2** of FIG. **20**, then to a metering or expansion valve and to pressure drop distributor and distributor tube(s). This will cool a chiller-refrigerator, air-conditioner or cool charge air for an internal combustion engine or rotary turbine. The expanded gas is then channeled collectively, or in separate tubes, to fuel an internal combustion engine, a gas turbine combustion system, a gas fired absorption chiller, or a furnace for a steam turbine, or a space heater burner thereby ultimately consuming the gas to provide additional work.

FIG. **22** is a list of the numbered components in FIG. **21**.

FIG. **23** is a two-dimensional drawing depicting a means of extracting work from liquefied natural gas (LNG), or liquefied hydrogen (LH_2) after first using it for cryo-cooling electric superconductor cables. This constitutes a new co-generation system. At the end of its use in cooling, the pumped LNG or LH_2 is directed to send the LNG or LH_2 through an optional pressurizer unit and then to conduit **2** of FIG. **20** to a metering or expansion valve, then to pressure drop distributor and distributor tube(s). This will cool a chiller-refrigerator, an air-conditioner or a cooling charge air for internal combustion engines or rotary turbine(s). The same expanded gas is then channeled collectively, or in separate tubes, to fuel an internal combustion engine system, a gas turbine combustion system, a gas fired absorption chiller, or a furnace for a steam turbine or a space heater burner, thus, ultimately burning the gas to provide further work.

FIG. **24** is a perspective view (with portions in cross section or shown schematically) of a cold air supercharged rotary internal combustion engine in which the rotor rotates in a epitrochoid (Wankel) type motion, operating in a novel working cycle characterized by having a cool or chilled and more dense fuel-air charge for greater power and torque and efficiency and describes methods of supercharging the engine during the compression process and obtaining the advantages described.

FIG. **24**-B is a perspective view of the engine of FIG. **24**, showing the combustion chamber in firing position with supercharge port closed by rotor.

FIG. **25** is a perspective view (with portions in cross section or are shown schematically) of a rotary internal combustion engine in which the rotor rotates in a epitrochoid (Wankel) type motion and describes operating in a novel working cycle, characterized by double compressing and cooling of the fuel-air charge and describes methods of increasing charge fuel-air density and reducing its overall temperatures.

FIG. **25**-B is a perspective view of the engine of FIG. **25**, showing alternate valving systems with the rotor shown in firing position.

FIG. **26** is a perspective view (with portions shown cut away) of a cold air supercharged rotary internal combustion in which the rotor(s) rotates on a central axis, operating in a unique working cycle, characterized by reducing compression temperatures, increasing power, torque and efficiency with ultra low polluting emissions.

FIG. **27** is a cross sectional view of a compression section of the engine of FIG. **26**, showing means and methods of reducing and varying "effective" compression ratios and of selectively extending the expansion ratio and of cold air supercharging the engine during the compression process and relieving valve tips from rubbing friction.

FIG. **28** is a cross sectional view of the expansion rotor and combustion chambers of the engine of FIG. **26**, showing means and methods of sealing the combustion chambers and obtaining three power pulses for each rotor rotation

FIG. **29** is a perspective view of one of two compressor section end-plates, showing track that valve guide rollers follow to prevent valve tips from rubbing the inside of the stator of the engine of FIG. **26**.

FIG. **30** is a perspective view (with portions in cross section and schematically) of a cold air supercharged rotary internal combustion engine in which rotors rotate on a central axis , the vane tips traveling, guided in an elliptical path and showing means and methods of supercharging the engine during the compression process after the engine has received an initial low "effective" compression ratio fuel-air charge.

FIG. **31** is a perspective view (with portions in cross section and schematically), showing means and methods by which an air charge is received by an engine and cooled during the compression process is cooled and compressed and cooled a second time and then introduced into the combustion chamber and fired with an extended expansion ratio.

FIG. **32** is a perspective view of one of two end-plates of the stator of engines of both FIG. **30** and FIG. **31**, showing the "raceway" or guide groove for the vane guide rollers.

DETAILED DESCRIPTIONS OF THE DRAWINGS

With reference now in greater detail to the drawings, a plurality of alternate preferred embodiments of the apparatus of the cold air supercharged internal combustion engine **100** of the present invention are depicted. Like components will be represented by like numerals throughout the several views and, in some but, not all circumstances, as is deemed necessary (due to the large number of embodiments), similar but, alternate components will be represented by super-scripted numerals (e.g. **100**[1]). When there are a plurality of similar components, the plurality is often times referenced herein (e.g., six cylinders **7***a*–**7***f*), even though fewer than all components are visible in the drawing. Also, components which are common among multiple cylinders are sometimes written with reference solely to the common numeral, for ease of drafting—e.g. piston **22***a*–**22***f*=>piston **22**. In an effort to facilitate the understanding of the plurality of embodiments, (but not to limit the disclosure) some, but not all, sections of this Detailed Description are subtitled to reference the system or sub-system detailed in the subject section.

The invented system of the present invention is, perhaps, best presented by reference to the method(s) of managing combustion charge densities, temperatures, pressures and turbulence; and the following description attempts to describe the preferred methods of the present invention by association with and in conjunction with apparatuses configured for and operated in accordance with the alternate, preferred methods.

Some, but not necessarily all, of the system components that are common to two or more of the herein depicted embodiments include a crankshaft **20**, to which are mounted connecting rods **19***a*–**19***f*, to each of which is mounted a piston **22***a*–**22***f*; each piston traveling within a power cylinder **7***a*–**7***f*; air being introduced into cylinder **7** or **12** through inlet ports controlled by intake valves **16**-A and **16**-B, or inlet ports **11**, and air being exhausted from the cylinders through exhaust ports controlled by exhaust valves **17** or **8**-B and conduit **18**. The interaction, modification and operation of these and such other components as are deemed necessary to an understanding of the various embodiments of the present invention are expressed below.

The Engine **100**[1] of FIG. **1** Operating in Operational Designs 1–6

Referring now to FIG. **1**, there is shown a six cylinder reciprocating internal combustion engine **100**[1] optionally operating in modes 1, 2 or a steady state method 3 and having one atmospheric air intake **9**, FIG. **1**. It is so constructed and arranged that a compressor **2** receives charge air from manifold **14**-B through openings **8**-B (shown in FIG. **2**) and conduit **8'** which air enters through common air intake duct **9** of FIG. **3**. Intake conduits **15***a*-C to **15***f*-C distributes the low pressure air to the intake valves **16**-B of each power cylinder. This arrangement allows the provision of air to intake valves **16**-A and **16**-B at different pressure levels since the charge air from conduit **15**-A is selectively pressurized by compressor **2**. Intake conduits **15**-A, **15**-C, in which all of the cylinders (only one (**7**) of which is shown in a sectional view) **7***a*–**7***f* and associated pistons **22***a*–**22***f* operate in a 4-stroke cycle and all power cylinders are used for producing power to a common crankshaft **20** via connecting rods **19***a*–**19***f*, respectively. A compressor **2**, in FIG. **1** and FIG. **2**, shows a Lysholm type rotary compressor which, with air conduits, as shown selectively, supplies pressurized air to one or more cylinder intake valves **16**A. An air inlet conduit **8'** receives atmospheric air from a low-pressure manifold **14**-B which receives atmospheric air through inlet **9**, selectively compresses and cools the charge which then goes to intake valve **16**-B by way of conduit **32**, FIG. **2**. Inlet conduits **15**-A, **15**-C and **32**, FIG. **2** separately supply air charge at atmospheric pressure and air which has been compressed to a higher pressure to separate intake valves **16**-B and **16**-A, opening to the same cylinder **7***a*–**7***f* (for example, shown here opening to cylinder **7***f*). Intercoolers **10**, **11** and **12** and control valves **3**, **4**, **5** and **6** are used in the preferred embodiments to control the air charge density, weight, temperature and pressure of the air charge going to intake valve **16**-A, while compressor **1**, intercooler **10** and conduit **32** optionally and selectively convey charge air to intake valve **16**-B. The intake valves **16***a*-B-**16***f*-B, which receive air through manifold **14**-B and intake conduits **15***a*-C to **15***f*-C or through conduit **8'** and conduit **32**, are timed to control the compression ratio of the engine **100**[1] in Operational Designs 3–6. The combustion chambers are sized to establish the compression ratio of the engine in Designs 1 and 2. Because of noticeable similarities between the engine **100**[1] of FIG. **1** and that of FIG. **2** (where the atmospheric air inlet **9** system has been shown in phantom, for informational value), reference will be made as deemed helpful to FIG. **2** for certain common components.

The engine **100**[1] shown in FIG. **1** is characterized by the ability to provide a normal expansion ratio in Operational Designs 1 and 2 and an extended expansion ratio and a low effective compression ratio in Operational Designs 3 through 6, with Design 4 having an effective compression ratio of near zero, perhaps 2:1 or less, and all capable of producing a combustion charge varying in weight from substandard to heavier-than-normal and capable of selectively providing a mean effective cylinder pressure higher than can the conventional arrangement in normal engines with lower maximum cylinder temperature in comparison to conventional engines. Engine Control Module (ECM) (refer to FIG. **2**) and variable valves **3**, **4**, **5**, and **6** on conduits, as shown, provide a system for controlling the charge pressure, density, temperature and mean and peak pressure within the cylinder, which allows greater fuel economy, production of greater power and torque, with low polluting emissions for spark ignited, compression ignited, modified HCCI, or true HCCI engines. In alternate embodiments, a variable valve timing system with the ECM-**27** can also control the time of opening and closing of the intake valves **16**-A and/or **16**-B to further provide an improved management of conditions in the combustion chambers to allow for a flatter torque curve and higher power, with low levels of both fuel consumption and polluting emissions. In another alternate embodiment, as shown in FIG. **2**-B, FIG. **2**-C, FIG. **2**-D, FIG. **11**-B, FIG. **18**-B, FIG. **20**, FIG. **21** and FIG. **23**, the engines of this invention and any current technology Otto or Diesel Cycle engine, or any other internal combustion engine, can utilize compression-expansion chilled charge air for greater power and efficiency and to lessen polluting emissions. (A design for Otto and Diesel Cycle engines, using refrigerated charge air, is depicted in and described for FIG. **2**-D).

Brief Description of Triple Mode Operation

The new cycle engine **100**[1] of FIG. **1** is a high efficiency engine that attains both high power and torque, with low fuel

consumption and low polluting emissions. The new cycle is an external compression type combustion cycle. In this cycle, part of the intake air (all of which is compressed in the power cylinders in conventional engines) is selectively compressed by an ancillary compressor **2**. The temperature rise at the end of compression can be adjusted by use of air coolers **10**, **11** and **12**, which cool the intake air and by the late cylinder injection of temperature-adjusted air, and alternatively, by using chilled charge air and always with a low compression ratio in Operational Designs 2–6. While operating optionally in mode 1, the valve **16**-A, which injects a supplementary secondary air-fuel charge in mode 2 and mode 3 can be deactivated and/or compressor **2** is "waste gated" by bypass valves **3**, **4**, **5** and **6** in FIG. **2**, being opened. (Optionally, high-pressure valve **16**-A is a simple air or gas injection valve similar to a natural gas fuel injector which is closed during mode 1 operation.)

Optional operational modes for the engines of this invention assures continued reliable engine operation in mode 1 at such a time that ancillary compressor(s) may fail when operating in mode 2 or mode 3. By cutting out the supercharging air supply section, the engine continues to operate in mode 1 with power equal to conventional engines and with improved fuel economy. (This pertains to Operational Designs 1, 2, 3 and 6 with Design 4 being excepted.) Thus, mode 1 is especially essential for military vehicle or power generation duty.

Mode 1

During operation, a primary air charge is supplied by piston **22** intake (1st) stroke to the cylinder **7** through intake valve **16**-B at atmospheric pressure or air which has been increased in pressure by perhaps one-half to one atmosphere through an atmospheric air inlet **9** or through inlet **8** of FIG. **2**, which is preferably carbureted. For mode 1 operation, the charge is then compressed (2nd stroke) in the cylinder **7**, fuel added if not present, and ignited at the appropriate point near TDC for the power (3rd) stroke, followed by the scavenging (4th) stroke, providing high fuel economy and low polluting emissions. This completes one power cycle.

Mode 2

When more power is desired for mode 2 or mode 3 operation, a secondary air charge (mandatory at all times for Design 4), originating from air conduit **8**' and high pressure manifold (**13** and **14** in FIG. **2**), is introduced into the power cylinder **7** by a second intake valve **16**-A, which introduces a higher pressure temperature adjusted air or air-fuel charge after the first intake valve, **16**-B has closed. It is then injected either during the intake stroke, or preferably after compression has begun, or at any time during the compression stroke, or near TDC. This is in order to adjust the temperature and increase charge density and turbulence when needed. After the secondary air charge has been injected, intake valve **16**-A, which can be operated hydraulically or electrically or in some designs by cam, quickly closes. Compression (2nd) stroke continues and the charge is ignited near TDC. Piston **22** expands in the power (3rd) stroke followed by the scavenging 4th stroke. This completes one power cycle.

Mode 3 (Steady-State)

For mode 3 operation, modes 1 and 2 are combined, simplifying operation with the high-pressure secondary charge being injected without interruption into cylinder **7** any time after low-pressure intake valve **16**-B closes as in mode 1, and preferably injected during the compression stroke. The compression stroke continues to near TDC. The charge is ignited for the power (3rd) stroke followed the scavenging (4th) stroke. This completes one power cycle in mode 3 operation.

Alternatively, a one-way valve (one type of which is shown as **2**' in FIGS. **7**, **9** and **10**) can be utilized to provide a constant or a variable initial "pressure ratio" in the cylinder **12**, while improving turbulence. In this alternate method of operation, valve **2**' would close when the pressure in the cylinder **12** nearly equates or exceeds the pressure in conduit B, FIGS. **7**, **9** and **10** or conduit **15**-A in FIGS. **1** and **2**, isolating valve **16**-A from cylinders **7** or **12** and giving valve **16**-A adequate time to close. Thus, the pressure in conduit B or **15**-A, FIG. **1**, controlled by compressor speed, along with valves **3**, **4**, **5** and **6** and the ultimate compression ratio would regulate the pressure, density, temperature and turbulence of the combustion charge.

The air pressure, supplied to intake runner-conduit **15**-A (FIG. **1**), is produced at a high level, and intake valve **16**-A is, in alternate embodiments, replaced by a fast-acting, more controllable valve, such as, but not limited to a high speed valve (**21**', FIGS. **3**, **4**, **5**, **7** and **10**), which valve is, preferably, either mechanically, hydraulically, electrically or vacuum operated alternatively under the control of an engine control module (ECM)-**27**. In such an embodiment, a small or large, dense, temperature-adjusted, high-pressure charge, with or without accompanying fuel, can, selectively, be injected (perhaps by a gas-fuel type injector) at any time during the compression stroke, or even during the combustion process (always after intake valve **16**-B has closed) in order to adjust the charge temperature and density, to reduce peak and overall combustion temperatures and to complete the desired charge mixing before combustion.

Alternatively, conduit **15**-A, FIG. **1** and FIG. **2** may be fitted with compression-expansion valves **10**' as illustrated in FIG. **2**-B, FIG. **2**-D, FIG. **11**-B and FIG. **18**-B to maximize the cooling abilities of the high pressure charge going to intake valve **16**-A, or in one design, FIG. **2**-C, the chilled charge is primary and is injected by intake valve **16**-B. (Preferably when the air charge is injected by expansion valve **10**', the injection takes place during the intake stroke as in FIG. **2**-C). Also, the expansion valve **10**' can be made variable in size, and/or bypass system R and X (adjustable by ECM-**27**, FIG. **2**-B, FIG. **2**-C, and FIG. **2**-D) in order to control the cooling and power characteristics of the injected charge, as needed.

In order to maximize the chill cooling effect, the differential pressure of the cylinder and the incoming charge must be significantly in favor of the incoming charge with the cylinder pressure being the lower.

Alternatively, inlet ducts **17**-A or **17**-B of FIGS. **3**, **4**, **7** and **10** are placed in the cylinder wall so that part of the high-pressure charge air is injected between cylinder wall **7** and piston **22**, preferably above the top piston ring at TDC. This will provide cooling for the engine and sweep the area clean of unburned hydrocarbons and also prevent the formation of formaldehyde

High pressure inlet conduits **15**-A in the engines of FIG. **1**, FIG. **2**, FIG. **3** and FIG. **4** and high pressure conduits B in FIG. **5**, FIG. **7**, FIG. **8**, FIG. **9**, FIG. **10**, FIG. **11**, and conduit **9**' in FIG. **11**-B and conduit **8**' in FIG. **13**, conduits **15***a*-A, **15***f*-A to valve **16***a*-E and **16***f*-E of FIG. **18**, and conduit **8**' in FIG. **19** and FIG. **19**-B, in alternative designs are fitted with adjustable expansion valves **10**' as in FIG. **2**-B, FIG. **2**-D, FIG. **11**-B and FIG. **18**-B to refrigerate the

E-FILED
Thursday, 09 February, 2006 05:30:23 PM
Clerk, U.S. District Court, ILCD

high pressure air going to the high pressure intake valves **16**-A, and in FIG. **2**-C, refrigerate the air going to the low pressure intake valve **16**-B. The latter chills the primary charge air for further improvements in reducing polluting emissions.

Alternatively, in the engine of FIG. **2**-C, the air or air/fuel (primary) charge first entering the cylinder **7** or **12** by intake valve **16**-B or ports **11** is compressed highly and passed through expansion valve **10'**, pressure-drop-distributor, **11'** and distributor tube (evaporator) **17***a*, at the beginning of the intake of valve **16**-B, which is then closed at BDC for Operational Designs 1 and 2 in which cam profiles are as normal. The intake valve **16**-B can close early or late in other designs in regard to the effective compression ratio desired. In this case, when greater power is needed (mode 2 or 3), the cool high pressure air or air/fuel charge is injected by intake valve **16**-A at any time during the compression stroke, or even during combustion, after intake valve **16**-B has closed in any case.

The expansion valves **10'** can alternatively have variable size openings and bypass systems R and X. They are controlled by the ECM-**27** to maintain optimum engine temperature and density in regards to polluting emissions and power requirements. Alternatively, the expansion valves may be combined with high-speed cylinder intake valves into one unit.

If the charge air entering expansion valve **10'** of engine of FIG. **2**-C was at 200 psi pressure, and the expansion valve **10'** dropped the pressure going to cylinder 7 to 70 psi, the chilling effect will be high and the pressure boost will be about five atmospheres for great power. If the primary air charge was compressed to 100 psi, it could be expanded by valve **10'** to say 15 psig for adequate cooling with a pressure boost of one atmosphere.

Fuel can be carbureted in any of the 4-stroke designs in one or both air inlet streams, with the exception of Design 4 of FIG. **1**, FIG. **2**, FIG. **2**-B, FIG. **2**-C and FIG. **18**-B where carburetion of fuel must of necessity be done in the high-pressure incoming stream only. Also, the 2-stroke designs should be carbureted by the high pressure inlet air stream only.

Fuel can also be injected in a central-body (not shown), or the fuel can be injected into one or both of the inlet streams of air, injected into a pre-combustion or pre-heater chamber, or injected directly through intake valves **16**-A, **16**-B (**16**-B only if **16**-B does not remain open past BDC and not at all in Design 4), or it may be injected directly into the combustion chamber at point x during the compression stroke (and during the intake stroke, only if intake valve **16**-B closes before or at BDC), or at the time after the piston **22** has reached point x in the compression stroke. The fuel can be injected along with compressed air, compressed cooled air, or with compression-expansion "chilled" accompanying air, the latter as depicted in FIG. **2**-B, FIG. **2**-C, FIG. **2**-D, FIG. **11**-B, FIG. **18**-B and FIG. **18**-C. The fuel can be injected with or without heated or cool accompanying air. In the case of diesel operation, fuel can be carbureted for spark ignition or for the HCCI system, as explained herein.

Alternatively, for modified or true HCCI operation of diesel fueled engines, the fuel can be carbureted, if during compression of the charge, the temperature is kept below the auto-ignition temperature of the fuel-air mixture. Compressing in stages with intercooling makes this system feasible. The air-fuel mixture is kept just below auto-ignition temperatures. The fuel can also be carbureted with the air charge before or after any stage of compression and cooling of charge. In either of these two systems, the charge can be ignited by spark or HCCI at near piston TDC. As an alternative to initial fuel carburetion, the primary air only charge can be compressed to temperatures higher than auto-ignition temperature. A small secondary air charge is then cooled and mixed (carburated) with the entire fuel charge and is injected 10–15 degrees before or at piston TDC for timely ignition. In either of these systems, the high-pressure secondary charge injection will assure homogenization and clean burning of the charge. After the temperature-and density-adjusting-air charge has been injected (mode 2 or 3), compression of the charge continues and with fuel present, is ignited at the opportune time, preferably 10–15° before TDC, for the expansion (3rd) stroke. The effective compression ratio is established by the displaced volume of the cylinder remaining after point x (the point where intake valve **16**-B closed whether before, at, or after BDC) has been reached on the compression stroke, being divided by the volume of the combustion chamber. Therefore, the compression ratio for Designs 1 and 2 is equal to the compression ratio, and for Design 4, it is zero. The expansion ratio is determined by dividing the cylinders total clearance volume by the volume of the combustion chamber.

Referring now to FIG. **1**-C, in engines having only one atmospheric intake conduit, but having different air paths and conduits, such as conduits **15**-A and **15**-C of FIG. **1**, a shunt conduit **202'** leading from the exhaust conduit **18** is divided into two shunt conduit portions **203***a*, **203***b*, each with a proportioning valve **209***a*, **209***b* operating so as to selectively admit exhausted gases to either or both of intake valve **16**-B (through conduit **9** and eventually conduit **15**-C) and/or to intake valve **16**-A (by way of conduit **8** and conduit 1S-A). Each proportioning valve, **209***a*, **209***b* would allow either a portion or none of the exhausted gases to enter its respective port, meanwhile restricting entrance of fresh air if necessary. The exhausted gases can be cooled or heated by optionally arranging fins **202***a* on conduit **202'** and/or **203***a*, **203***b* and **203***c*, or by passing the exhaust through an optional intercooler or heater (not shown) before the gases are introduced into the air intake(s) of the engine. A take-off shunt conduit **203***d* and a proportioning valve **209***e* leading from shunt **202**, which is filled with exhaust gases, along with shunt **203***e* and proportioning valve **209***f*, leading from atmospheric air intake conduit **9**, with shunt conduit **203***d* and shunt **203***e* converging and becoming a single shunt conduit **203***f*, leading to a compressor **2'**, which has a conduit **203***g* leading to a bypass system **209***g*, **203***h* and an intercooler or heat exchanger **108**, which has a conduit **203***i*, leading to an outlet conduit **36**, which is connected to a preparation or pre-combustion chamber **38'** shown in FIG. **19** and FIG. **19**-B in combustion chamber of FIG. **19**-C and FIG. **19**-D.

With this arrangement, proportioning valves can direct undiluted exhaust gases or fresh air or any percentage of either, mixed through compressor **2** and optional cooler or heat exchanger **108** to inlet **36** of FIG. **19** and inlet **36**-B of FIG. **19**-B for the purpose of being used as a catalyst for ignition of the air-fuel charge in pre-combustion chamber **38'** or combustion chamber **38**.

Alternatively, as shown in phantom on FIG. **1**-C, one shunt portion **203***a* is optionally diverted (shown as **203***c*) directly to conduit **15**-C and provided there with a proportioning valve **209***c*.

In the engine of FIG. **2** having dual atmospheric air intakes **8**, **9**, (**9** is in phantom) an arrangement similar to that shown in FIG. **1**-C is utilized, it being understood, however, that conduit **8** is open to the atmosphere.

In any engines having dual air intake conduits or dual air paths, a portion of exhausted gases can be introduced in any amount necessary, from one to three points and controlled preferably by an engine control module (ECM) for better management of combustion and emissions characteristics.

The Engine 100² of FIG. 2 Operating in Operational Designs 1–6

Referring now to FIG. **2**, there is shown a schematic drawing of a six-cylinder engine **100²** operating optionally in three modes in a 4-stroke cycle. The engine is similar in structure and operation to the 4-stroke engine of FIG. **1** and shows alternative air induction systems, utilizing air intake **9** or air intake **8**. FIG. **2** also shows three intercoolers **10, 11** and **12** and dual manifolds **13** and **14** plus alternative intake manifold **14**-B. The need for dual atmospheric air intake (**8** and **9** in FIG. **2**) can be eliminated by providing air from port **8**-B of manifold **14**-B directly to air intake conduit **8'** shown schematically, in FIG. **2**.

Mode 1

One alternate air induction system shown in FIG. **2** supplies unpressurized charge-air to intake valve **16**-B of the engine of FIG. **1** and of FIG. **2**, by providing atmospheric pressure air to the intake runners **15***a*-C to **15***f*-C leading from manifold **14**-B in FIG. **1** and FIG. **2**, which receives atmospheric air through induction port **9**, and then, during an intake (1st) stroke of piston **22** distributes the unpressurized air to intake valves **16**-B of each power cylinder. Alternatively, the primary charge is boosted by compressor **1** and conduit **32**. Then compression (2nd) stroke occurs and the air-fuel charge is ignited near TDC for the power (3rd) stroke, which is followed by the scavenging (4th) stroke to complete a power cycle.

Mode 2

The intake (1st) stroke has occurred and for more power for mode 2 or 3 operation, high-pressure, cooled air is injected through intake valve **16**-A at anytime after piston **22** reaches BDC on intake stroke, preferably during the compression stroke for Operational Designs 1 and 2 of FIG. **1** and FIG. **2** engine, and for Designs 3 (both methods), Designs 5 and 6, after piston **22** has reached point x during the compression stroke (the point in which intake valve **16**-B closes), and near TDC for Design 4. Alternatively, for Designs 3 (both methods) and Designs 5 and 6, intake valve **16**-A is opened at any point deemed appropriate in the intake stroke or compression stroke at or after the point at which intake valve **16**-B closes. Intake valve **16**-A then quickly closes, compression continues in Designs 1, **2**, 3, 5 and 6 and fuel is added, if not present. The charge is ignited near (TDC) and the power (3rd) stroke occurs in all Design systems including Design 4 where the entire charge is introduced pre-compressed, near TDC of stroke **2** and ignited for the power (3rd) stroke, which is followed by the scavenging (4th) stroke.

Mode 3 (Steady-State)

Operational modes 1 and 2 are combined in this manner for a more simple operation: Piston **22** takes in air or air-fuel charge on the intake (1st) stroke according to the Operational Design chosen. A secondary high pressure air charge is injected by intake valve **16**-A preferably during the compression stroke, either later or at the same time that the piston **22** reaches the point at which the intake valve **16**-B closes. Intake valve **16**-A then quickly closes, compression continues, with the exception Design 4, FIG. **1**, where piston **22** is near TDC when valve **16**-B closes and the high-pressure valve **16**-A charges the cylinder. Fuel is added, if not present and the charge is ignited at the appropriate place, preferably 10–15 degrees before TDC, for the power (3rd) stroke. This is followed by the scavenging (4th) stroke to complete the power cycle. (In Operational Design 4, intake valve, which is now outlet valve **16**-B, closes just far enough before TDC of piston **22** position to allow time for the injection of the entire air or air-fuel charge and its ignition near TDC.

In all operational modes, a third alternate and preferred air induction system shown in FIG. **2** supplies the primary air charge to intake valve **16**-B as follows: Charge-air which has been pressurized to a low pressure by compressor **1**, perhaps from 0.3 Bar to as much as 2 Bar or more, can selectively (and intermittently or continuously) be supplied to low pressure intake valves **16**-B of the engine of FIG. **1** or FIG. **2** by way of conduit **32**, leading from conduit **110** to the intake valves (**16***a*-B through **16***f*-B) which conduit receives charge-air at atmospheric pressure or which has been pressurized and has had its temperature optimized, all controlled by compressor **1** and intercooler **10** with the charge-air paths being controlled by ECM-**27** and valves **5** and **6** with the corresponding conduits. In this case the valve **33** is optional. The use of this system also eliminates the need for dual atmospheric air intakes.

A fourth alternate air induction system, shown in FIG. **2**, supplies the primary charge-air to the low pressure intake valves **16**-B by having charge-air coming selectively from intake system **9**, manifold **14**-B and intake runners **15**-C (shown in phantom) or from conduit **32**, which would direct air to power cylinder **7** at whatever level of pressure and temperature was needed at any particular time. With this arrangement, opening valve **33** at such a time that compressor **1** was compressing the charge passing through it, would have the effect of increasing the density of the primary charge-air, which in this case, has its temperature as well as its pressure adjusted by compressor **1** and control valves **5** and **6**. A one-way valve **34** would prevent the higher pressure air escaping through conduit **15**-C. When less power was needed, compressor **1** could be "waste gated" by opening, partially or completely, control valve **6** and closing shutter valve **5**. Alternatively, valve **33** could be closed by the engine control module (ECM-**27**) and the primary charge-air would be drawn into cylinder **7** at atmospheric pressure through intake duct **9**.

Operational Designs of Primary Air Charging and Setting of Compression Ratios for All Modes

Described below are six Operational Designs of the new-cycle engine **100²** applicable also to operation of engines for FIG. **1**, FIG. **2**, FIG. **2**B, FIG. **2**C, FIG. **3**, FIG. **4**, FIG. **5** and FIG. **7**

Depending upon the power requirements of the engine (e.g., differing load requirements), either intake air at atmospheric pressure from inlet **9** or intake air that has been boosted in pressure by compressor **1**, as shown in FIG. **2**, by conduit **32** and has had its temperature adjusted by bypass systems **5** and **6** and charge-air cooler **10**, is drawn into the cylinder **7** by intake stroke through air inlet **8** in FIG. **2** or **2**-B, the atmospheric air optionally through manifold **14**-B, intake conduits **15**-B, and either at atmospheric pressure or boosted, is received by intake valves **16***a*-B-**16***f*-B, by intake stroke of piston **22**. (Inlet port **8** in FIG. **2**-C admits air to

compressors **1** and **2**, intercoolers **10**, 11 and **12** and ultimately to both intake valves **16**-A and **16**-B, the latter by way of conduit **27**'*a*, **27**"*f* going to inlet valve **16**-B and conduits **113**' and **114**' going to inlet valve **16***a*-A–**16***f*-A.)

Operational Design 1. In this design, intake valving and combustion chambers are as in normal engines. On the primary air intake (1st) stroke, the intake valve is left open as normally done to receive as large a charge as possible and closed at the usual time, near (BDC) to capture a full air charge, which produces a normal compression ratio with the expansion ratio being equal to the compression ratio.

Operational Design 2. In Design 2, the primary air intake valving is as in normal engines to capture a full air charge, but the combustion chamber is larger-than-normal for a substandard compression ratio still with the expansion ratio being equal to the compression ratio.

Operational Design 3. There are two methods to this design. In the first method for the primary air intake, the intake valve **16-B** is closed early, during the intake stroke before the piston reaches BDC. The small trapped air charge provides a substandard or low effective compression ratio with the expansion ratio being greater than the compression ratio.

In the optional method of Design 3 of primary air charging after the intake stroke is complete, the intake valve **16**-B, which can be single or multiple, is left open for a period of time after the piston **22** has passed BDC and is then closed. This pumps part of the fresh air charge back into the intake manifold to again trap a smaller-than-normal air charge producing a substandard or low effective compression ratio with an extended expansion ratio.

Operational Design 4. Design 4 describes another system of primary air charging, which is to hold the intake valve **16**-B open on the intake (1st) stroke, through BDC to near piston (TDC). Valve **16**-B is then closed to trap very little primary air charge for an effective compression ratio of perhaps 2:1 or less with an extended expansion ratio. Optionally, intake valve **16**-B is closed at piston BDC and an ancillary valve (not shown) is opened to allow the primary air charge to be pumped through and out of the cylinder for cooling of the cylinder.

Operational Design 5. Design 5 describes an additional method of primary air charging an engine cylinder **7**, of engines of FIG. **1**, FIG. **2**, FIG. **2**-B, FIG. **2**-C, FIG. **3**, FIG. **4**, FIG. **5** and FIG. **7** with a smaller-than-normal charge is being captured in cylinder **7**, by intake valve **16**-B closing early in the intake stroke at piston BDC, or early in the compression stroke, optionally producing a substandard or normal compression ratio which alternatively produces an extended or a normal expansion ratio.

Operational Design 6. Design 6 describes still another alternative method of primary air or air-fuel-charging. In this system, valve **16**-B selectively closes early before BDC, or as late as BDC of piston **22**, optionally producing a substandard or normal compression ratio for optionally a variable expansion ratio.

General Operation of Operational Designs 1 Through 6

Mode 1

The intake (1st) stroke has occurred and the compression (2nd) stroke is now underway. Compression begins for a normal compression ratio in Design 1, and for a substandard compression ratio in Design 2, a substandard compression ratio for Design 3 and for a compression ratio of near zero in Design 4. Designs 5 and 6 can produce a normal compression ratio or a substandard compression ratio depending on the point that intake valve **16**-B closes. If the effective compression ratio is substandard in Operational Designs 3 through 6, the expansion ratio is extended.

With the substandard compression ratio of Design 2 and with the intake valve **16**-B closing early or late in Designs 3 and 4 and alternatively early or late in Designs 5 and 6, lessens the temperature rise of the primary air charge during the compression stroke. In Design 4, there is little or no heat-of-compression, only the cooling of the cylinder by the ejected primary air. At the end of the compressions (2nd) stroke fuel is added, if not present, the charge is ignited near TDC. Then, the expansion (3rd) stroke occurs, followed by the scavenging (4th) stroke. This produces an efficient low emissions operation with normal power, especially if the primary air is boosted in pressure.

Mode 2

Intake valve **16**-B has opened and closed for the induction of the primary air charge by piston **22** intake (1st) stroke. A secondary compressed, temperature-adjusted air charge is injected into the cylinder **7** by intake valve **16-A**, which opens and closes quickly after closure of valve **16**-B. This preferably happens during the compression stroke, or even during combustion in all Operational Designs. In all operational designs, the intake valve **16**-A will open only at or after reaching the point the intake valve **16**-B closes in the primary air charging process, which for Design 4 is near TDC, to inject the secondary air charge. In all cases, the engine of this invention can produce a more dense, homogenized temperature controlled charge in order to provide the torque and power desired of the engine. The later in the compression stroke the secondary air or air-fuel charge is injected, the less is the heat-of-compression for that portion of air also. This fact, coupled with the low heat-of-compression production of the first or primary air or air-fuel charge, assures a very cool compression process in total.

For Operational Design 4, the secondary charge produces virtually no heat-of-compression for the coolest working cycle of all Designs.

Mode 3 (Steady-State)

The engines of the present invention can be simply and efficiently operated in a single mode, mode 3, by combining the operations of mode 1 and mode 2, whereby the secondary air or air-fuel of mode 2 is added in mode 3 without interruption at the same point it would be injected in mode 2, according to the Operational Design of 1 through 6 that is chosen for the particular engine design and duty cycle selected.

Discussion of Various Operating Parameters

In Design 4, after inducting the primary air charge by the intake (1st) stroke of piston **22**, little air charge is retained on the compression stroke and cylinder **7** is empty, or almost so and near TDC as intake valve **16**-B closes after ejecting almost all of its fresh air charge back into the intake system. Close to the end of the 2nd stroke and near TDC high pressure "conditioned" air intake valve **16**-A opens to inject nearly, or virtually all of the required air or air/fuel charge. (In this system, the primary air charge is pumped in and out of the cylinder, mostly to cool cylinder **7** before the "loading" and firing at TDC for the power (3rd) stroke of piston **22**. Alternatively, an ancillary exhaust valve **16**-C (indicated in FIG. **2**, FIG. **2**-B and FIG. **2**-C, but not shown) or exhaust

valve **17** would be opened at the beginning of compression (2nd)stroke of piston **22** and closed near piston TDC rather than keeping intake valve **16**-B open to near end of compression stroke. This is in order to vent the unused air of the non-compressing (2nd) stroke to the exhaust manifold, to be used to cool compressor or engine cylinders or expelled to the atmosphere or for other use.) As soon as the air charge is injected near TDC, fuel is added, if not present. The charge is ignited for a very cool, dense combustion expansion process in the expansion (3rd) stroke followed by the scavenging (4th) stroke. This completes one power cycle. In this Operational Design, the fuel charge is injected near piston TDC, but early enough that the charge can be placed, the valve **16**-B closed and the charge ignited, the latter preferably 10–15 degrees BTDC.

For Design 4, among the various choices available, the engine of either FIG. **2**-B or FIG. **2**-C could be utilized, offering a choice of thermodynamically chilling either the primary air charge, which only cools the cylinder, or chilling the secondary air charge or chilling both charges with the primary air charge being used to cool the cylinder **7** and its combustion chamber with the secondary charge being a chilled working charge. The primary charge is expelled either back through intake valve **16**-B or through an ancillary valve **16**-C (not shown) or through exhaust valve **17**, FIG. 1 which is again opened at BDC and left open to near TDC.

Operating in mode 2 or steady-state mode 3 when even greater power is required using either of the Operational Designs, the secondary air charge can be increased in density and weight by causing shutter valves **5** and **3** and by-pass valves **4** and **6** to direct all or a greater part of the air charge through compressors **2** and **1** and through coolers **10**, **11** and **12** to increase the charge density and/or by increasing compressor speed or by cutting in a third stage of auxiliary compression, thus enabling more air to be pumped in on the backside. Alternatively, the secondary air or air-fuel charge can be compression-expansion chilled by the system shown in FIG. **2**-B, FIG. **11**-B, FIG. **18**-B and items **10'**, **11"**, **12**, **17***a*, **27'***a*, **27'***f* and **16***a*-A and **16***f*-A. In the engine of FIG. **2**-C, the primary air charge through intake valve **16**-B is compression-expansion chilled with intake valve **16**-A, when operating in mode 2 or mode 3, receiving the dense, non-expanded air charge as in engine of FIG. **2**-C. The timing of the closing of intake valve **16**-B can be optionally altered in Designs 3, 4, 5 or 6, perhaps temporarily, to retain a smaller, or a larger charge.

In all Designs for modes 1, 2 and steady-state mode 3, near the end of the compression stroke, fuel is added, if not present, the charge is ignited by spark, compression, modified HCCI or by HCCI, and combustion produces a large expansion of the combusted gases against the piston **22** for the power (3rd) stroke producing great energy in either mode 1, mode 2 or mode 3 for Designs 1, 2, 3, 5 or 6 (Design 4 operates only in mode 3). This energy is absorbed and turned into high torque and power.

Near piston BDC, for modes 1, 2 and 3, the exhaust valves **17***a*–**17***f*, **17***a'*–**17***f'* open and the cylinder **7** is efficiently scavenged by the (4th) stroke of piston **22**, after which valve(s) **17** close (seen in FIG. **1**).

Shown in FIG. **2** is a suggested engine control system consisting of an engine control module (ECM) **27**, two shutter valves **3** and **5**, two air bypass valves **4** and **6**, the optional pressure reducing valves **25** (**25***a*–**25***f*) on air conduits **15**-B (**15***a*-B–**15***f*-B) There is also a scheme of controlling the pressure, temperature and density separately by controlling air bypass valves **4** and **6** and shutter valves **3** and **5**. As illustrated, air bypass valve **4** is closed to allow compressor **2** to fully compress the charge and shutter valve **3** is slightly open, allowing part of the air to flow uncooled (hollow arrows) and some of the air cooled (solid arrows) to the manifolds **13** and **14**, all of which could be controlled by the ECM-**27** in order to provide an air charge at optimum density, temperature and pressure. The hollow arrow **4**-A in conduit **120** shows how ABV **4** can be partially opened to allow some of the air to bypass and return to compressor **2** in order to finely adjust the pressure of the secondary air charge that is injected during mode 2 operation to adjust the charge density, turbulence and temperature. Part or all of the air charge can be directed through the intercoolers **10**, **11** and **12** (except that going through conduit **32** to intercooler **10** on the way to intake valve **16**-B) or through bypass conduits **121** and **122**, to the manifolds **13** and **14**. In addition, the temperature and density in cylinder(s) **7** can be controlled over a greater range by utilizing the compression-expansion charge chilling feature depicted and described in FIG. **2**-B, FIG. **2**-C, FIG. **2**-D, FIG. **11**-B and **18**-B, with the expansion valve opening size and the bypass system alternatively, also being controlled preferably by ECM-**27**.

In any of the engines of this invention, the problem common to normal engines of incomplete mixing of fuel, air and residual gas, with consequent variation in conditions at the ignition point is minimized and, in some cases, eliminated by the turbulent air charge injection at high pressure and/or by carburetion of fuel-air. This problem, hereby addressed by the present invention, is extreme in current engines when gaseous fuel is injected directly into the cylinder where the spark may occur in mixtures of varying air-fuel ratios, hence with various rates of flame development.

The turbulence produced in mode 2 and steady-state mode 3 by high pressure charge injection during the compression stroke, or later, is not dampened by the compression stroke. In Operational Design 2 through 6, the subnormal compression ratios lessen the heat-of-compression for the first portion of air charge. The later the supplementary, secondary charge is injected, the smaller the volume of charge is required to produce the desired turbulence and less the heat-of-compression development for that portion of charge, also. In any reciprocating internal combustion engine, operating in accordance with the method of the present invention, a very high pressure, temperature-controlled air charge can, selectively, be injected very late in the compression stroke, (and in Operational Design 4 for FIG. **1**–FIG. **7** engines, the charge is injected in just far enough before TDC to allow proper charging and ignition.

The use of this system will result in lower maximum cylinder pressures and temperatures. Efficiency should be greater and the detonation limit higher, thus allowing an appreciable increase in efficiency and mean effective cylinder pressure with a given fuel. All of the engines of this invention can, with the exception of Operational Designs 1 and 2, operate with a more complete expansion process, as compared to the typical prior art engines, to provide even further improvements in efficiency and emissions characteristics. In Designs 1 and 2, the compression and expansion ratios are equal.

The fuel can be injected with part, or all, of the air charge in either mode 1, 2 or 3 with the exception of Design 4 which operates only in mode 3. The fuel can also be injected later and, in the case of conventional diesel operation, can be injected into the combustion chamber at the usual point for diesel oil injection, perhaps into a pre-combustion chamber

or directly onto a glow plug. In mode 2 or 3, after the temperature-and-density-adjusting-air charge has been injected, if used, compression of the charge continues except, in Design 4 of FIG. **1** engine, where piston is near TDC, and with fuel present, is ignited at the opportune time for the expansion stroke. Now, in all modes, the air-fuel charge has been ignited and the power stroke of piston **22** takes place as the combusted gases expand. Near BDC of the power stroke, the exhaust valve(s) **17** opens and the cylinder **7** is efficiently scavenged by piston stroke **4**. If Design 4 of FIG. **1** or FIG. **2** engine is utilized, an outlet valve **16**-C (not shown) or exhaust valve **17**, FIG. **1** expels almost the entire primary charge, using it only to cool cylinder **7**, with a heavier secondary air charge being injected into cylinder **7** by valve **16**-A and ignited at or near TDC. Alternatively, intake valve **16**-B may be left open through most of the compression stroke for Design 4 in order to express the primary charge back through valve **16**-B.

The Engine $100^{2\text{-}B}$ of FIG. 2-B Operating in Operational Designs 1–6

Referring now to FIG. **2**-B, there is shown a six cylinder reciprocating internal combustion engine $100^{2\text{-}B}$ having one atmospheric air intake **9** and is so constructed and arranged that a compressor **1** and **2** receives charge air from manifold **14**-B through openings **8**-B (shown in FIG. **2**) and conduit **8'** which air enters through common air intake duct **9** or by way of inlet port **8**. Intake conduits **15***a*-C to **15***f*-C or **32**, the latter optionally boosted in pressure, distributes the low pressure air to the intake valves **16**-B of each power cylinder. This arrangement allows the provision of air to intake valves **16**-A and **16**-B at different pressure levels since the charge air from conduit **27***a*–**27***f* are selectively pressurized by compressor **2** and alternatively, by compressor **1** which also receives the total air charge through intake duct **8**. Intake conduits **27***a*–**27***f* and **15***f*-C, in which all of the cylinders (only two (**7**) of which are shown in a sectional view) **7***a*–**7***f* and associated pistons **22***a*–**22***f* operate in a 4-stroke cycle and all power cylinders are used for producing power to a common crankshaft **20** via connecting rods **19***a*–**19***f*, respectively. A compressor **2**, in this figure, a Lysholm type rotary compressor, is shown, which with air conduits, as shown, selectively supplies pressurized air to one or more cylinder intake valves **16**-A. An air inlet conduit **8'** receives atmospheric air from a low-pressure manifold **14**-B, which receives atmospheric air through inlet **9**. Inlet conduits **15**-C, **27***a*–**27***f* or **32** separately supply air charge at atmospheric pressure, or optionally boosted slightly if by conduit **32**, and air which has been compressed to a higher pressure to separate intake valves **16**-A (high pressure) and **16**-B (low pressure) opening to the same cylinder (shown here opening to cylinder **7***a* and **7***f*). Intercoolers **10**, **11** and **12** and control valves **3**, **4**, **5** and **6** are used, controlled by ECM-**27**, in the preferred embodiments, to control the air charge density, weight, temperature and pressure. The intake valves **16***a*-B–**16***f*-B, which receive air through manifold **14**-B, or inlet port **8** and intake conduits **15***a*-C to **15***f*-C or **32** (in Designs 3 through 6), are timed to control the "effective" compression ratio of the engine $100^{2\text{-}B}$ according to the Operational Design 1–6 chosen for the engine. Engines operating in Operational Designs 1 and 2 have compression and expansion ratios that are equal, although Design 2 has a substandard compression ratio set by an oversized combustion chamber. Also, the engine, shown in FIG. **2**, is characterized by the ability to provide an extended expansion ratio, and a low "effective" compression ratio in Operational Designs 3 through 6, and all are capable of producing a combustion charge varying in weight from substandard to heavier-than-normal. It is also characterized by being capable of selectively providing a mean effective cylinder pressure higher than can the conventional arrangement in normal engines with lower maximum cylinder pressure and temperature in comparison to conventional engines. Engine Control Module (ECM) **27** and variable valves **3**, **4**, **5**, and **6** on conduits, as shown, provide a system for controlling the charge pressure, density, temperature, and mean and peak pressure within the cylinder, which allows greater fuel economy, production of greater power and torque, with low polluting emissions for spark ignited, compression ignited, modified HCCI, or true HCCI engines.

In alternate embodiments, a variable valve timing system, with the ECM-**27**, can also control the time of opening and closing of the intake valves **16**-A and/or **16**-B and the opening size of expansion valve **10'** and/or bypass valve R. This system can further provide an improved management of conditions in the combustion chambers to allow for a flatter torque curve and higher power, with low levels of both fuel consumption and polluting emissions. As shown in FIG. **2**-B, FIG. **2**-C, FIG. **11**-B and FIG. **18**-B, the engines of this invention and any current technology Otto or Diesel Cycle engine (FIG. **2**-D) or any other internal combustion engine, can utilize compression-expansion chilled charge air or air/fuel mixture for greater power and efficiency and to lessen polluting emissions. As depicted in FIG. **2**-B, a high pressure charge air or air-fuel mix is expansion chilled by conduits **114** and **113**, receiving highly compressed and cooled air. The air is compressed by one or several stages of compression with intercooling, while conduits **114** and **113** convey the cool, dense air or air-fuel charge to and through optional surge tanks below C and B (shown in phantom), to optional bypass system R and X and/or to expansion valves **10'** and **10"**, pressure-drop-distributors **11'** and **11"**. It is here where the effluent is divided into distributor tubes (evaporator tubes), tube **17***a* and **17'***a*, conveying the effluent to conduits **27***a* and **27***f* and to intake valves **16***a*-A and **16***f*-A respectively, which open selectively into cylinders **7***a* and **7***f*. These evaporator tubes **17** would of necessity be short or combined with the intake valves **16**-A, eliminating conduits **27***a* and **27***f*. The low pressure primary charge intake valves **16***a*-B–**16***f*-B may optionally receive "chilled" charge air also on the intake stroke by way of conduits **15***a*-B–**15***f*-B and optional pressure control **25***a* leading from conduits **27'***a*–**27'***f*.

The air or air-fuel charge can be composed of air and such fuels as gasoline, alcohols, diesel oils, diethyl ether, propane, natural gas, hydrogen, etc. Due to their high density charge and low operating temperature, the Entec Cycle Engine Designs become the most feasible engine for hydrogen fuel operation and for HCCI operations, the only engine for diesel fuel operation.

Brief Description of the Engine $100^{2\text{-}B}$ Shown in FIG. 2-B

The new cycle engine $100^{2\text{-}B}$ of FIG. **2**-B is a high efficiency engine that attains both high power and torque, with low fuel consumption and low polluting emissions. The new cycle is an external compression type combustion cycle. In this cycle, part of the intake air (all of which is compressed in the power cylinders in conventional engines) is selectively compressed by an ancillary compressor **2**. The temperature rise at the end of compression is suppressed by subnormal compression ratios (except in Designs 1) and by use of air coolers **10**, **11** and **12**, which cool the intake air and by the late cylinder injection of temperature-adjusted sec-

ondary air charge and alternatively, by expansion chilling the charge air injected at any point deemed desirable, preferably during the compression stroke, after reaching or passing the point intake valve **16**-B has closed.

Operation

The operation of engine of FIG. **2**-B is the same as that described for the engine of FIG. **1** and FIG. **2**, operating optionally and selectively in one to three modes and where the operating parameters are fully explained. The preferred system is mode 3 operation as described for the engines of FIG. 1 and FIG. **2** in which modes 1 and 2 are combined to produce mode 3, providing somewhat simpler controls, always operating with a supplementary, secondary air injection.

Primary air charging is the same as the various Operational Designs 1–6 described for engines of FIG. **1** and FIG. **2**. The chief difference between engine systems of FIG. **1**, FIG. **2** and FIG. **3** is that the secondary air charge added in mode 2 and mode 3 is compression-expansion chilled for greater charge densities and cooler working cycle. This provides greater power and durability along with reduced fuel consumption and lower polluting emissions. Optionally, the primary air charge may also be compression chilled by way of conduit **15**-B receiving charge air from conduit **27'***a*.

Engine **100**$^{2-C}$ of FIG. **2**-C Operating in Operational Design 1–6

Referring now to FIG. **2**-C, there is shown a six cylinder reciprocating internal combustion engine **100**$^{2-C}$ so constructed and arranged that a compressor **1** receives and selectively compresses charge air which enters through common air intake duct **8**. All of the cylinders (only two (**7**) of which is shown in a sectional view), **7***a*–**7***f* and associated pistons **22***a*–**22***f* operate in a 4-stroke cycle and all power cylinders are used for producing power to a common crankshaft **20** via connecting rods **19***a*–**19***f*, respectively. The charge air is alternatively mixed with fuel in carburetor **56** and then bypassed or passed partly or wholly through conduit **102** to bypass or pass partly or wholly through bypass valve **6** or to bypass or to push partly or wholly through conduit **105** to intercooler **10** and through conduits **106** and **110** to compressor **2**. The compressor **2**, in this figure, a Lysholm type rotary compressor, shown with air conduits, selectively, supplies pressurized air to one or more cylinder intake valves **16**-A and **16**-B at different pressure levels to the same cylinder **7***a*–**7***f* (for example, shown here opening to cylinder **7***a* and **7***f*). Intercoolers **10**, **11** and **12** and control valves **3**, **4**, **5** and **6** are used, in the preferred embodiments, to control the air charge density, weight, temperature and pressure. The intake valves **16***a*-B–**16***f*-B receive charge air or air-fuel mix through expansion valve **10'**, pressure-drop-distributor **11'** and distributor tube **17***a* leading from high-pressure conduits **114** and **113** and are timed to control the compression ratio of the engine **100**$^{2-C}$ according to which of the Operational Designs 3–6 is selected. Designs 1 and 2 have fixed compression ratios that are equal to their expansion ratios. Alternatively, the charge density is controlled by either bypass system R and X and/or, by varying the nozzle opening of expansion valve **10'**, and hence, controlling the density and temperature of the incoming charge to valve **16**-B. (Because of noticeable similarities between the engine **100**^{2} of FIG. **2** and that of FIG. **2**-C, reference will be made as deemed helpful to FIG. **2** for certain common components).

The engine **100**$^{2-C}$ shown in FIG. 2-C is characterized by the ability to provide equal compression and expansion ratios in Operational Designs 1 or 2 and an extended expansion ratio and a low "effective" compression ratio in Designs 3, 4, 5 and 6, all capable of producing a combustion charge varying in weight from substandard to heavier-than-normal and capable of selectively providing a mean effective cylinder pressure (MEP) higher than can the conventional arrangement in normal engines with lower maximum cylinder temperature in comparison to conventional engines. Engine Control Module (ECM) **27** and variable valves **3**, **4**, **5**, and **6** on conduits, as shown, provide a system for controlling the charge pressure, density, temperature, and mean and peak pressure within the cylinder which allows greater fuel economy, production of greater power and torque, with low polluting emissions for spark ignited, compression ignited, modified HCCI, or true HCCI engines. In alternate embodiments, a variable valve timing system with the ECM-**27** can also control the time of opening and closing of intake valves **16**-A and/or **16**-B and the size of the opening in expansion valve **10'**, and/or opening and varying passage through bypass system R and X. This further provides an improved management of conditions in the combustion chambers which allows for a flatter torque curve and higher power, with low levels of both fuel consumption and polluting emissions. As shown in FIG. **2**-B, FIG. **2**-C, FIG. **2**-D, FIG. **11**-B and FIG. **18**-B, the engines of this invention and any current technology Otto or Diesel Cycle engine, or any other internal combustion engine, can utilize compression-expansion chilled charge air for greater efficiency and power and to lessen polluting emissions. As depicted in FIG. 2-C, the low pressure primary charge air, or air-fuel mix to intake valve **16**-B, is expansion chilled by conduits **114** and **113**, receiving highly compressed and cooled air, compressed by one or several stages of compression with intercooling and conveying the cool dense air or air-fuel charge to expansion valves **10'** and **10"**, pressure-drop-distributors **11'** and **11"**. It is here where the effluent is divided into distributor tubes, tube **17***a* and tube **17***f*, conveying the effluent to intake valves **16***a*-B and **16***f*-B, respectively by way of evaporator tubes **27'***a* and **27***f*, which open selectively into cylinders **7***a* and **7***f* respectively. Conduits **113'** and **114'** separate, as in conduits **113** and **114**, to convey the same highly compressed density and temperature adjusted charge from conduit **113** and **114** and bypasses expansion valve **10'** and its associated components, and the very dense, cool effluent is directed, without being expanded, to high pressure intake valve **16***a*-A, **16***f*-A, and to the same cylinders **7***a* to **7***f* respectively, for producing great density and steady-state power. Conduits **113'** and **114'** may optionally be fitted with pressure regulators D and E as shown in phantom.

The air or air-fuel charge can be composed of air and such fuels as gasoline, alcohols, diesel oils, diethyl ether, propane, natural gas, hydrogen, etc. Due to its high density charge potential and low operating temperature, the Entec Cycle Engine becomes the best reciprocating engine for hydrogen fuel operation and for HCCI operation, the only engine for diesel fuel.

Brief Description of Operation of the Engine **100**$^{2-C}$ Shown in FIG. **2**-C

The new cycle engine **100**$^{2-C}$ of FIG. **2**-C is a high efficiency engine that attains both high power and torque, with low fuel consumption and low polluting emissions. In this cycle, the intake air is selectively compressed by ancillary compressor **2** and alternatively also by compressor **1**. The temperature rise at the end of compression stroke is restrained by a substandard compression ratio in all designs

except Operational Design **1** (see engine of FIG. **2**) and by use of air coolers **10**, **11** and **12**, which cool the intake air and optionally by using chilled primary charge air and selectively by the late cylinder injection during the compression stroke of cool, temperature-adjusted, dense supplementary, secondary air charge.

Operation

The entire air charge is received through inlet port **8** leading to compressor **1**. The air is compressed, cooled and directed to compressor **2** where it is further compressed and has the charge temperature adjusted by intercoolers and bypass system and the high pressure charge is conveyed to conduits **113** and **114**. The charge is then divided and one part conveyed through expansion chillers (items **10'**, **11'**, **17***a* and optionally, R and X) to primary air intake valve **16**-B while another portion of charge is conveyed to secondary intake valve **16**-A optionally, without any expansion of charge, but alternatively, with the pressure regulated by regulators D and E on high pressure conduits **114'** and **113'**.

Mode 1

During operation, a primary air charge is supplied during the intake (1st) stroke to the cylinder **7** through intake valve **16**-B, which air or air/fuel has been highly compressed, cooled and expanded through expansion valve **10'**, pressure-drop-distributor **11'** and distributor tube **17***a*, and conduits **27'***a* and which is preferably mixed with fuel and carbureted. During the intake stroke, intake valve **16**-B closes, specified for either Operational Design 1, 2, 3 or 4, as described for engine of FIG. **2**. At BDC of piston **22**, intake valve **16**-B closes, or is already closed, and the charge is then compressed in the cylinder **7** by piston (2nd) stroke. Fuel is added, if not present, and ignited at the appropriate point near piston TDC for the power (3rd) stroke, the piston expanding to BDC, after which the exhaust (4th) stroke occurs. (The charge density can be from subnormal to as much as 6–7 atmospheres pressure with some designs having an extended expansion ratio, according to the Operational Design selected. All Designs provide high fuel economy and low polluting emissions.) This completes one power cycle in mode 1 and the piston now turns around to begin another cycle. The engine performs with power and low fuel consumption and emissions in this operation mode. The chilled air or air-fuel charge plus the substandard compression ratio of all Operational Designs, except Design 1, assures very low heat-of-compression for this first portion of charge.

Mode 2

The intake valve **16**-B has opened and closed on the intake (1st) stroke, according to the Operational Design chosen, receiving a chilled primary charge. The piston **22** turns around and begins the power stroke, a secondary (non-expanded) high pressure, dense, cool temperature-adjusted air charge originating from air conduits **113** and **114**, by way of conduits **113'** and **114'**, from just below B and C, is introduced, optionally pressure regulated, into the power cylinder **7**. This occurs preferably during the compression (2nd) stroke of piston **22**, even as late as near TDC, by a second intake valve **16**-A. This intake valve introduces the cool, high pressure supplementary air charge, at any time after the first intake valve **16**-B has closed in order to adjust the temperature and to increase charge density and turbulence of the charge. After the supplementary air charge has been injected, intake valve **16**-A, which can be operated hydraulically or electrically or, in some designs, by cam, quickly closes and the compression (2nd) stroke continues. (The temperature, pressure, amount and point of injection of the supplementary charge, after piston **22** begins the compression stroke, is adjusted to produce the desired results. The later the secondary charge is injected, the lower will be the compression ratio and the heat-of-compression for that portion of the charge also.)

Near the end of the compression (2nd) stroke, fuel is added if not present, the charge is ignited by spark, compression, modified HCCI or HCCI, and combustion produces a large expansion of the combusted gases against the piston **22** for the power (3rd) stroke, producing great energy in any of the Operational Designs 1, 2, 3, 4, 5 or 6. This energy is absorbed and turned into high torque and power.

Near BDC of the piston, exhaust valves **17***a*–**17***f*, **17***a'*–**17***f* (see FIG. **1**) open and the cylinder **7** is efficiently scavenged by the (4th) stroke of piston **22**, after which valve(s) **17** close, completing a power cycle.

The air pressure supplied to intake runner-conduit **113'**-**114'**, running between conduits **113** and **114** and intake valves **16***a*-A and **16***f*-A (FIG. **2**-C), is produced at a high level. Not being expanded, as is the primary charge, it remains very dense and cool and may alternatively be pressure regulated. In alternate embodiments, intake valve **16**-A is replaced by a fast-acting, more controllable valve such as, but not limited to, a high speed valve (**21'** of FIG. **4**), which performs either mechanically, hydraulically, electrically, Piezo or vacuum operated under the control of an engine control module (ECM)-**27**. In mode 2 or mode 3, a denser, temperature-adjusted, high-pressure charge, with or without accompanying fuel, can, selectively, be injected, at any time during the compression stroke, or even during the combustion process, in order to adjust the charge temperature and increase charge density, to reduce peak and overall combustion temperatures, and to complete the desired charge mixing before combustion.

In the engine of FIG. **2**-C the primary air or air/fuel charge to valve **16**-B is chilled in all modes by expansion valve **10'** (optionally, some or all of the charge is bypassed by use of R and X) and associated apparatus to cool cylinder and charge and which along with a low compression ratio for that supplementary portion of charge also means low heat-of-compression for both charge portions.

The high pressure cool supplementary charge, entering valve **16**-A after valve **16**-B has closed, is kept dense in order to produce great power.

The expansion valves **10'** can alternatively have variable openings (nozzle(s)), preferably controlled by the ECM-**27** to maintain optimum engine temperature and density in regards to polluting emissions and power requirements. For greater power in either mode, expansion valve **10'** effluent passage may be further or fully opened to direct a more dense charge into valve **16**-B during air intake or, alternatively, valve R may be opened, allowing some or all of the high pressure effluent to bypass expansion valve **10'** by way of conduit X, bringing a denser air-fuel charge into intake valve **16**-B. Either of these system, or the two systems in conjunction, preferably controlled by ECM-**27**, which receives command signals from sensors in the combustion chamber of cylinder **7** and perhaps other locations. In this case, intake valve **16**-B preferably allows piston **22** to go to BDC in the intake stroke before closing, as either valving system of Designs 1 to **6** of FIG. **2** engine can be employed.

Mode 3

The operation of FIG. **2**-C is simplified by combining the operations of mode 1 and mode 2to operate in a single mode,

mode 3, whereby the supplementary, secondary air or air-fuel charge is injected in mode 3 at the same point it would be injected in mode 2 operation, according to the Operational Design of 1 through 6 that is chosen for the particular engine design and duty cycle selected. Thereafter, the engine operates the same as that of mode 2 operation as explained for mode 3 operation in description of FIG. **2** engine. In other words, modes 1 and 2 are not used intermittently. Hence, the engine is operating in the simpler mode 3 continually.

Refrigerated Air Supercharged OTTO and Diesel Cycle Engines Operating in Operational Design 7 4-Stroke Cycle

Referring now to FIG. **2**-D, there is shown a six cylinder reciprocating internal combustion engine **100**$^{2\text{-}D}$ having one atmospheric air intake **8**. It is so constructed and arranged that a compressor **2** receives charge air optionally from air inlet **8** and optionally, compressor **1**. All cylinders **7***a*–**7***f* and associated pistons **22***a*–**22***f* operate in a 4-stroke cycle and all power cylinders are used for producing power to a common crankshaft **20** via connecting rods **19***a*–**19***f*, respectively. A compressor **2** in this figure, a Lysholm type rotary compressor and optional compressor **1** are shown, which with air conduits as shown selectively, supplies pressurized thermodynamically chilled air to cylinder intake valves **16***a*-A–**16***f*-A. Intercoolers **10**, **11** and **12** and control valves **3**, **4**, **5** and **6** are used, in the preferred embodiments, to control the air charge density, weight, temperature and pressure before reaching expansion valves **10'** and **10"** or valve bypass system R and X. The intake valves **16***a*-A–**16***f*-A, which receive air through conduits **17***a* and **17'***a*, by way of conduits or evaporator tubes **27'***a*–**27'***f*, are timed to receive and capture all of the air or air-fuel volume possible, with the compression ratio being equal to the expansion ratio as normal, or alternatively, the compression ratio may be varied or may be variable with expansion ratios being inversely varied. Passages of expansion valves **10'** and **10"** are preferably variable in order to also control the temperature and density of the air charge to the engine. The combustion chambers are sized to establish the compression ratio of the engine which is preferably equal to the expansion ratio. Because of noticeable similarities between the engine **100**^{2} of FIG. **2** and that of FIG. **2**-D, reference will be made as deemed helpful to FIG. **2**-D for certain common components.

The engine **100**$_{2\text{-}D}$ shown in FIG. **2**-D, optionally may cause the air intake valve **16**-A to close early or late in order to provide alternatively equal compression and expansion ratios or to provide an extended expansion ratio with a substandard "effective" compression ratio. It is optionally capable of producing a combustion charge, varying in weight from substandard to heavier-than-normal, and is optionally capable of selectively providing a mean effective cylinder pressure (MEP), higher than can the conventional arrangement in normal engines with lower maximum cylinder pressure and with lower maximum temperature in comparison to conventional engines. Engine Control Module (ECM) **27** and variable valves **3**, **4**, **5**, and **6** on conduits, as shown, provide a system for controlling the charge pressure, density, temperature and mean and peak pressure within the cylinder which allows greater fuel economy, production of greater power and torque, with low polluting emissions for spark ignited, compression ignited, modified HCCI, or true HCCI engines. (For HCCI operation, Method F of FIG. **19**-C or Method G of FIG. **19**-D is suggested for combustion chamber temperature control).

In alternate embodiments, optional variable opening expansion valves **10'** and **10"** along with pressure-drop-distributor **11** and expansion tubes **17***a*–**17'***a* along with conduits **27'***a*–**27***f* in conjunction with bypass control valve R and conduit X, provide an additional means of controlling charge density to further provide an improved management of conditions in the combustion chambers to allow for a flatter torque curve and higher power with low levels of both fuel consumption and polluting emissions.

As shown in FIG. **2**-D, the engines of this invention and any current technology, Otto or Diesel Cycle engine, or any other internal combustion engine or turbine can utilize compression-expansion chilled charge air for greater power and efficiency and engine durability and to lower polluting emissions. As depicted in FIG. **2**-D, the high pressure charge air or air-fuel is chilled by conduits **113** and **114**, receiving highly compressed and cooled air, compressed by one or several stages of compression with intercooling. Then, conduits **113** and **114** convey the cool dense air or air-fuel charge to and through optional surge tanks below C and B (not shown) to expansion valves **10'** and **10"** (with optional variable openings), pressure-drop-distributors **11'** and **11"**. The latter divides the effluent into distributor (evaporator) tubes, tube **17***a* and tube **17***f*, conveying the effluent by way of conduits or evaporator tubes **27'***a*–**27'***f* to intake valves **16***a*-A and **16***f*-A, which open selectively into cylinders **7***a* and **7***f* respectively. A bypass system composed of control valve R and conduit X, perhaps in conjunction with variable valves **10'**-**10"**, permits fine-tuning of the charge density and temperature by allowing the charge to go to intake valves **16**-A at different degrees of expansion (perhaps from no expansion to 70 psig), the latter still being a five atmosphere pressure boost in order to control power level and emissions characteristics of engine. These two systems working together alternatively adjust the density and the temperature in order to fine-tune control of the air or air-fuel charge of the engine.

The air or air-fuel charge can be composed of air and such fuels as gasoline, alcohol, diesel oil, diethyl ether, propane, natural gas or hydrogen, etc. Due to its high density charge and low operating temperature, the engine also becomes a superior engine for hydrogen or diesel fuel operation.

If the cooled air or air fuel charge in conduits **114** and **113** was at a level of, say 200 psi, it could be expanded to a very cold 70 psig working charge, which is about a 5 atmospheric pressure boost. If the initial cold charge was 100 psi, it could be expanded to 15 psi gage for a one atmosphere boost, or it could be expanded to a cold charge of less than atmospheric pressure for an extended expansion combustion process.

Brief Description of Operation of the Engine **100**^{2D} Shown in FIG. **2**-D

The new engine **100**$^{2\text{-}D}$ of FIG. **2**-D is a high efficiency engine that attains both high power and torque, with low fuel consumption and low polluting emissions. In this engine design, the entire intake air charge is selectively highly pre-compressed by an ancillary compressor **2** and optional compressor **1**. The temperature rise at the end of compression is reduced by use of air coolers **10**, **11** and **12**, which cool the charge air. The air charge is then compression-expansion chilled and injected into the power cylinders which temporarily become "evaporators.".

During operation, an air charge, originating from air conduit **8**, by conduits **110** and **109**, intercoolers **10**, **11** and **12**, compressors **1** and **2**, conduits **113**-**114**, expansion valve

10', 10", pressure-drop-distributor 11' and 11", and distributor tubes 17*a* and 17'*a* in FIG. 2-D, is introduced into the power cylinder 7 by way of conduits 27'*a*–27'*f* during the intake stroke by intake valve 16-A, which introduces the expanded chilled air charge in order to adjust the temperature, turbulence and charge density. After the air charge has been injected, intake valve 16-A, which can be operated hydraulically of electrically, or in some designs, by cam, closes at the BDC. The initial air charge may be boosted to a higher pressure by cutting in an optional second ancillary compressor, in series with compressor 2 (see for example, compressor 1 in FIG. 2-D). The main compressor to be used in the engine of FIG. 2-D is the compressor 2, shown in FIG. 2-D, for example as, but not limited to a Lysholm rotary type, between air inlet 8 and conduits 113, 114 with the air being intercooled and optionally expansion chilled.

Alternatively, the air bypass valve (ABV) 6 can be opened to re-circulate charge air back through the compressor 1 in order to relieve the compressor of compression of some of its work during light-load operation. Additionally, compressor 2 work can be decreased or increased by control valve 4 as needed.

Alternately, inlet ports 17-A and 17-B of FIGS. 3, 4, 7 and 10 are placed in the cylinder wall and a portion of the compressed air is directed to inlet ports 17-A, as shown in these figures, and injects air between cylinder 7 wall and piston 22. This will provide cooling for the engine and sweep the area and crevices clean of unburned hydrocarbons and also prevent the formation of formaldehyde. In any of the engines of the present invention, the cooling system in, and described for, FIG. 6 may be used to help control the temperatures perhaps most importantly in military and/or HCCI operation.

The expansion valves 10' can alternatively have variable size nozzles and bypass system, valve R and conduit X, controlled by the ECM-27 to maintain optimum engine temperature and density in regards to polluting emissions and power requirements. Again, alternatively, the expansion valves may be combined with high-speed cylinder intake valves into one unit.

Operation

Atmospheric air is received by duct 8, compressed by compressor 1 where optional carburetor 56 mixes air and fuel and optionally directs charge through intercooler 10. The air is then directed to compressor 2 and bypass valves 3 and 4 where part, or all, of the charge is compressed and directed to intercoolers 11 and 12. This is where part, or all, of the charge is cooled and directed to conduits 113 and 114, leading to expansion valves 10' and 10", pressure-drop-distributors 11' and 11" and distributor tubes 17*a* and 17'*a* which distribute the charge, by way of conduits 27'*a*–27'*f*, to intake valves 16*a*-A to 16*f*-A which receive the cold charge air into cylinders 7*a* to 7*f*. Valves 16*a*-B to 16*f*-B are exhaust valves leading to exhaust pipes 18 which lead to turbine of optional turbo-charger compressor 1 and to the atmosphere at turbo-charger outlet 18. The engine operates in the conventional manner. Atmospheric air is received through inlet duct 8, compressed by compressor 1, cooled, passed to compressor 2 where it is further compressed, and cooled by intercoolers 11, 12. and sent to expansion chiller system 10', 11' and 17' where the air or air/fuel charge is expanded and ducted to cylinder 7 intake valves 16*a*-A–16*f*-A by way of conduits 27'*a*–27'*f*. Alternatively, pressure-drop expansion is regulated and perhaps reduced by variable expansion valves 10' and/or partly or wholly bypassed through R-X system and the charge goes to inlet valves at the temperature and density required at any particular time preferably controlled by ECM-27, FIG. 2.

Action

Intake valve 16-A opens and piston begins intake (1st) stroke. The expanding charge enters intake valve 16*a*-A–16*f*-A of cylinder 7, chilling aided by the low pressure in cylinder. Near or at BDC of piston 22, intake valve closes, piston reverses and (2nd stroke) compresses the cold charge to perhaps 10–15 degrees before, or at TDC, where the charge, fuel being present, or now injected, is ignited, driving the piston in the power (3rd) stroke. Near BDC, exhaust valves (17 in FIG. 1) open and piston 22 performs the scavenging (4th) stroke. Near TDC, exhaust valves close and intake valve 16-A opens to begin the next cycle.

A single rank of cooler 9, conduit 9', manifold (C and B, not shown), expansion valve 10', pressure-drop-distributor 11' and evaporator tubes 17*a* and 27*a* of the air chilling system may be employed for cylinder charging, as shown in FIG. 11-B, rather than the dual systems illustrated for the engine of FIG. 2-D.

Advantages

(1) In general, a cold air charge gives greater steady-state power with lower peak temperatures and pressures for lower polluting emissions.

(2) The expanded charge intake valve 16-A can be closed early, or at BDC and the compression (2nd) stroke begins for a normal or a substandard compression ratio, the latter providing an extended expansion ratio, for even lower peak pressures and temperatures and higher efficiency.

(3) When using the charge expanded, the charge pressure can be from 5–7 atmospheres more or less or can be expanded to less than one atmosphere for an extended expansion ratio.

(4) Power can be adjusted for power or cruising by adjusting the density and pressure of the initial charge and by adjusting expansion valve 10' nozzle to control chilling versus power and/or alternatively, bypassing part or all of the charge through bypass system, valve R and conduit X. (If all, or most of the charge bypasses expansion valve 10', the pressure of the charge entering cylinder 7, can be regulated by optional pressure control valves D and E).

(5) If the compressed air charge is expanded until it is much colder, but less dense than in normal engines, a larger displacement engine will provide greater power in an even cooler working cycle, with low polluting emissions and much longer engine life—ideal for power generation, pumping, etc.

(6) In any engine designs using compression-expansion air charge-chilling, the pressure of the charge can be adjusted so that after intercooling and expanding, the charge entering the cylinder can be much denser and cooler than in current engines. This produces much greater steady-state power and durability with lower emissions than that of normal engines.

(7) Increased turbulence and cooler charge results in much lower polluting emissions, especially HC, NO_X and particulates.

(Refrigerated air charge 2-stroke engines are described hereafter for FIGS. 8, 9 and 10).

4-Stroke Engine Operating in Operational Design 1–6

Referring now to FIG. 3, there is shown a part sectional view through one power cylinder of the 4-stroke engine of

FIG. **3**, at the two intake valves, showing an alternative method (adaptable to other embodiments of the present invention) of high-pressure air charging and showing a means of mixing fuel and air and of passing air between cylinder wall and piston. This is in order to prevent formation of formaldehyde, CO and unburned hydrocarbons (HC), and of closing bottom inlet port(s) **17**-B while popette valve **16**-A is closing high-pressure inlet from conduit **15**-A and top inlet to conduit **17**.

The charge air or air-fuel may be compressed and cooled for any of Operational Designs 1 through 6, as described and illustrated for FIG. **1**, FIG. **2**, FIG. **2**-B and FIG. **2**-C engines. Additionally and alternatively, compression-expansion chilling may be employed before induction into cylinder **12**, the latter system by employing the compression chiller system shown in, and described for FIG. **2**-B, FIG. **2**-C, FIG. **2**-D, FIG. **11**-B and FIG. **18**-B, items **10'**, **11'**, **12**, **17***a* and **27'***a*, supplying chilled, high-pressure air through intake valve **16**-A by one or more compressors, with the engine operation being the same as that described for engine of FIG. **2**. Alternatively, the high-pressure conduit can divide, as in FIG. **2**-C, and supply air to both inlets **16**-B and **16**-A, with valve **16**-B receiving the compression-expansion chilled primary charge and intake valve **16**-A receiving the dense and cooled high-pressure air charge, with the engine operation being the same as that of FIG. **2**-C with optional pressure regulator on the secondary air charge inlet conduit **16**-A.

Mode 1

The operation of this engine is similar to the operation of the engine of FIG. **2** or FIG. **2**-C, operating in either system of Design 1 through Design 6, as described for engine of FIG. **2**, with low-pressure air, or alternatively expansion chilled air or air-fuel entering cylinder **12** through intake valve **16**-B on the intake (1st) stroke in which alternatively, intake valve **16**-B may be closed before, at or after BDC to capture either a normal or small air charge, (Designs 1 through Design 4 in FIG. **2**). (In closing after BDC, the intake valve may be left open to near TDC on the compression (2nd) piston stroke. Therefore, the primary charge would be expelled after cooling cylinder **12** (Design 4 of FIG. **2** engine). At the end of the intake stroke, compression (2nd) stroke begins and near TDC of piston, the fuel-air charge is ignited for the power (3rd) stroke. Then the scavenging (4th) stroke occurs and a new power cycle begins. This produces normal power with low fuel consumption and low polluting emissions.

Optional Mode 2

When more power is needed, intake valve **16**-B opens and receives the primary air charge by the intake (1st) piston stroke. Then a high density, supplementary air charge is injected as follows: Preferably during the compression (2nd) stroke to as far as TDC, high-pressure intake valve **16**-A opens (always after valve **16**-B closes) and closes quickly, injecting temperature adjusted, high-pressure air from conduit **15**-A as described for engines of FIG. 1 or FIG. 2. (The compression ratio and, hence, the amount of heat produced for this second portion of air depends on the point in the compression stroke that the second portion of air is injected). Inlet valve **16**-A is preferably activated by valve mechanism represented by **21'**, which can open and close within 40° crank angle. The valve **16**-A can be of any fast-acting type. The incoming air streams **15**-A and **15**-C can be both carbureted (except for Design 4) or alternatively, singularly carbureted, or fuel can be added at any point including cylinder injection for a homogenized air/fuel mixture.

During or at the end of the compression stroke, as inlet valve **16**-A opens, part of the inlet air passes into cylinder **12** directly and part of the compressed charge travels past the now open valve **16**-A (which can be structured in various ways) into conduit **17** to common air rail (in phantom) **17**-A. Here, the charge is directed to inlet port(s) **17**-B (which can be singular with air rail **17**-A being eliminated).

The high-pressure air or air and fuel enters high pressure cylinder valve **16**-A for excellent turbulent mixing of the charge. The compression (2nd) stroke continues, piston **22** covers port(s) **17**-B and valve **16**-A closes, earlier or later, covering both port from conduit **15**-A and top open port to conduit **17**. The place in the cylinder wall best suited for mixing, cooling, etc. should be chosen for placing inlet port(s) **17**-B by experimentation and calculations. The secondary high-pressure air charge mixes any charge in the cylinder, adjusts temperature and adds density to produce greater power, fuel economy and low polluting emissions, with low peak temperatures and pressures, further reducing polluting emissions and providing longer engine life. As the piston **22** continues to rise in the compression (2nd) stroke, less heat of compression, and no heat of compression for Design 4 of FIG. **2** engine, reduces NO_x and CO formation. Also, the heat of compression for the secondary air charge is low and the compression ratio of that portion is set by the point in the stroke this air was injected. Particulates are also greatly reduced because of the homogenizing of the charge for more complete combustion. Unburned hydrocarbons (HC) are reduced greatly because of better mixing of fuel and oxygen and, in addition, the gentle air injection between cylinder wall **12** and piston **22** as the piston passes open ports **17**-B cleans out piston ring crevices where unburned fuel hides. This also vents and cools space between piston **22** and cylinder **12** walls above the first piston ring where most formaldehyde forms. At near TDC the charge is ignited by spark, compression (glow plug), modified HCCI or HCCI. During the power (3rd) stroke, the pressurized air, which is trapped in conduit **17**, is released as piston uncovers inlet port(s) **17**-B, the trapped compressed air in conduit **17** rushes out **17**-B, again cleaning crevices and space between cylinder wall **12** and piston **22** for more complete combustion. The piston **22** now rises in the scavenging (4th) stroke and a new cycle begins. (If Design 4 of the engine of FIG. **2** is utilized, an outlet valve **16**-C (not shown) or intake valve **16**-B stays open until near TDC on the compression stroke and expels the full or almost complete primary charge near TDC using it only to cool cylinder **12** with the supplementary supercharge supplying all charge needed, being injected by valve **16**-A near TDC.)

Mode 3

Mode 3 operation constitutes a method of operating the engine of FIG. **3** in a single mode with full power and efficiency by combining mode 1 and mode 2 operations as described for engine FIG. **2**, and operating alternatively in any of the Operational Designs described. This mode is simplified by eliminating valving, etc., which are required to operate modes 1 and 2 intermittently.

4-Stroke Engine Operating in Operational Design 1–6

Referring now to FIG. **4**, there is shown a part sectional view through one power cylinder similar to the 4-stroke engine of FIG. **1**, FIG. **2**, FIG. **2**-C, and FIG. **3** at the two

intake valves, operating in any system of Operational Design 1 through Design 6, as described for engine of FIG. **2**. This shows an alternative method (adaptable to other embodiments of the present invention) of supplementary high pressure air charging after the primary air has been induced by the intake (1st) stroke. This is a means of increasing charge density and of mixing fuel and air and of passing air (somewhat differently from that of FIG. **2**, FIG. **2**-C and FIG. **3**) between cylinder wall **12** and piston **22** and of cleaning out piston ring crevices in order to prevent formation of formaldehyde, CO, unburned hydrocarbons (HC) and of closing inlet port(s) **17**-B while inlet valve **16**-A is closing. Low peak temperatures and high turbulence greatly reduce NO_x emissions and particulates.

Mode 1

The operation of the engine of FIG. **4** is similar to that of FIG. **2**, FIG. **2**-B, FIG. **2**-C and FIG. **3**, with the primary air charge in all designs except Operational Design 1 of FIG. **2** engine, alternatively having a low compression ratio with cool or chilled, low pressure primary air, or air-fuel charge coming in on the intake (1st) stroke of piston **22**, which is then compressed (2nd stroke) and, with fuel present, is fired for normal power (3rd stroke) such as cruising with low polluting emissions. The scavenging (4th) stroke follows. This completes one power cycle.

Mode 2

When greater power is needed. the operation is thus: following the intake (1st) stroke of piston **22**, a supplementary, secondary high-pressure air or air-fuel charge is injected during or at the end of the compression (2nd) stroke, by intake valve **16**-A. The supplementary air entering cylinder **12** is solely from conduit **17**, through common air-rail **17**-A and inlet port(s) **17**-B. This is another means of homogenization, increasing density and adjusting the density and temperature of the charge. (Common air-rail **17**-A and all but one of inlet ports **17**-B may be eliminated.)

Alternatively, the primary or supplementary charge air or air-fuel charge can be compression-expansion chilled before intake into cylinder **12** through valve **16**-B or **16**-A respectively by utilizing the expansion valve chiller system depicted in and described for FIG. **2**, FIG. **2**-C and FIG. **3**.

Detailed Operation of Mode 3 (Single Mode Operation)

Intake valve **16**-B opens, piston **22** descends in intake (1st) stroke to admit atmospheric pressure air or air boosted in pressure, which is alternatively cooled or chilled. The primary charge intake system is either of the Methods of Primary Air Charging of Operational Designs 1 through Design 6, as described for engine of FIG. **2**. After the primary charge has been received and intake valve **16**-B has closed, the piston **22** reaches BDC and the compression (2nd) stroke begins. During the compression stroke of each cycle, intake valve **16**-A opens and injects a supplementary, secondary cool or chilled, dense air charge into port **17** and through port **17**A or ports **17**-B. After port(s) **17**-B, which can be of any number or place deemed appropriate within cylinder **12** wall are closed, compression continues and at, or near TDC of piston **22**. Ignition then takes place for the power (3rd) stroke, followed by the 4th or exhaust stroke. In the engine of FIG. **4**, compressed air sweeps out ring crevices and space above top piston ring between piston and cylinder wall and some of the compressed air is trapped in conduit **17** during the compression stroke. As piston **22** expands in the power stroke, the residual compressed air in conduit **17** expands against piston **22**, again cleaning out crevices and other spaces and then expands into the cylinder, further mixing oxygen and fuel for more complete combustion. Operation is the same as that of Operational Designs 1–6 of FIG. **2**, FIG. **2**-B. FIG. **2**-C and FIG. **3** engines.

Military Model 4-Stroke Air-Cooled Engine Operating in Operational Designs 1–6

Referring now to FIG. **5**, there is shown a perspective view (with portions in cross section) of the cylinder block and head of an internal combustion engine, operating in a 4-stroke cycle, operating in either system of Design 1 through Design 6, as described for engine of FIG. **2**, FIG. **2**-B and FIG. **2**-C and representing a preferred embodiment of the apparatus of the present invention, from which a first method of operation can be performed and will be described. Among its other components, this embodiment is seen as having an auxiliary cooling system to provide engine cooling during such time as the liquid cooling system should be damaged. Due to the overall cooler working cycle of the engine of this invention air-cooling becomes simple and efficient.

The operation of the engine is the same as the operation of the engine of FIG. **2** with a first mode and optional second and preferred third modes of operation, as described for engine of FIG. **2**, FIG. **2**-C, FIG. **3** and FIG. **4** with the following alternative arrangements:

The engine of FIG. **5** is fitted with a high performance air compressor, which could be a dedicated compressor (not shown), or the compressor **2** of FIG. **2** or FIG. **2**-C and could be fitted with branching conduits, one of which would be fitted with control valve(s) and lead from fittings C and B, FIG. **2**-C leading from intercooler(s) **11** and/or **12** of FIG. **2**-C, and would be attached to an inlet port in the engine head or engine block, in this case, engine head at port **4**. Engine port **4**, alternatively, is fitted with an expansion valve **4'**. Thus, expanding cool, highly compressed air is sent through ports and passages in engine or alternatively pumped through port **4** and expansion valve **4'**, sending the expanding air chilled through passages which now become evaporator tubes within the engine head and block. In addition, the compressed cool and chilled air can be directed through cooling channel(s) **6** of FIG. **6** in walls of cylinder sleeve **12** of FIG. **6**.

The system for supplying compression-expansion chilled air, which can alternatively be used for both engine operating charge air and engine cooling air is described for engine of FIG. **2**-C, FIG. **3** and FIG. **4**, in which system any type of efficient compressor system may be employed.

Military Model 4-Stroke New Cycle Engine

Since about fifty percent of combat vehicle engine failures during battle conditions are historically due to loss of the cooling system, the ability to switch to auxiliary cooling will be a boon to the military, allowing the vehicle to continue in its duty and to return home. When running on auxiliary cooling, the engine uses about twice the amount of compressed air as when liquid cooled. For this reason, when switched to air-cooling, fuel economy is slightly compromised, but for the military, under battle conditions, this will be happily tolerated.

There are several designs of the New Cycle Engine that are capable of providing efficient auxiliary cooling at such a time that the liquid cooling system should fail. Described here are only two such designs for a 4-stroke engine and three such designs for a 2-stroke engine.

Operation of 4-Stroke New Cycle Air-Cooled Engine

The operation of the engine is the same as any of Operational Designs 1 through Design 6, as first described for the basic engine of FIG. **2** and which also pertains to engine of FIG. **1** through **7** for greater torque, power, and durability with low fuel consumption and ultra low polluting emissions.

Alternatively and preferably, the operation of the engine of FIG. **5** is the same as the operation of the engine of FIG. **2**, FIG. **2**-C, FIG. **3** and FIG. **4** with optionally chilled air for primary charge through valve **16**-B with the supplementary, secondary air charge being introduced through valve **16**-A as a very dense cool charge.

Cooler Working Cycle

In Operational Design 1 through Design 6, described for engine of FIG. **2**, the low, or near 2:1 or less compression ratios (the latter being in Design 4) greatly reduces the amount of heat-of-compression in mode 1, which is Design 4 can be near zero.

In mode 2 operation, the injection of cooled, compressed, supplementary supercharging air, which preferably is during the compression stroke, cools the air charge in all six Operational Designs by the heat exchange effect and by the absorption effect of expanding air, as is true of all compressed gases when expanded. In all modes, 1, 2 and steady-state mode 3 for Designs 2 through 6, the primary portion of air charge is heated less as the compression ratio or the "effective" compression ratio is reduced. The density of the air or air-fuel charge is adjusted selectively from less than normal, to normal or to above normal in all Operational Designs by the injection of the supplementary, secondary air charge. For mode 2 and 3, the later the supplementary air charge is injected in the compression stroke in Designs 1 through 3 and 5 and 6, the smaller will be the "effective" compression ratio for that second portion of air, for again, low heat-of-compression and in Design 4, the compression ratio is near 2:1 for little or no heat of compression. Because of the overall cooler-working cycle, the engine can be operated with air-cooling or "compression" air chill-cooling at such a time the liquid cooling system should be damaged.

Auxiliary Cooled Operation

At such a time that the liquid cooling system should be compromised, operation of the engine would continue in the same manner with a few additional steps. This would allow the vehicle to continue to perform in battle and to return home. This cooling system can be also used on any Otto or Diesel Cycle engine.

Pressurized air flow to cylinder head inlet **4** is begun by opening a valve to dedicated compressor and cooler system or by increasing compressor **2** speed in FIGS. **1**, **2**, and **2**-C, where a valved branch (not shown) of high pressure conduit B in FIG. **5** would deliver adequate compressed air to port **4** or alternatively to a metering or expansion valve **4'**, opening to inlet port **4**, and perhaps by cutting in another stage of compression or another compressor.

Valves from an air conduit, from C and B on conduits **113** and **114** from coolers **11** and **12**, all in FIG. **2**-C, to expansion valve **4'**, opening to inlet **4** of engine of FIG. **5** optionally is opened and compressed air or expanding compressed air chills as it expands internally by the expansion valve **4'** from inlet port **4** to air-rail **5**. This allows the air to be conducted as it expands and distributes to and through cooling "evaporator" channels **6** of FIG. **5**, which are finned **6'** in FIG. **6** and situated on the outer side of the cylinder sleeve **12** between the cylinder sleeve **12** and the cylinder block **12'** as shown in FIG. **6**. The expanding compressed air then is ducted into air rail **7** which collects the air from all channels, and directs it to an air conduit **8** which conducts the air to the atmosphere or to exhaust manifold **9** and to the atmosphere. Part of the expanding air can be sent first through channels around the exhaust valve seat and through other problem areas of the engine. If the air cooling channels suggested for cooling the cylinder liners cool too much, other areas of the engine more appropriate for air cooling channels may be chosen, as one alternate cooling route is depicted by **6** in FIG. **7** and FIG. **10**.

While the engine is operating liquid cooled, all of the high-pressure air goes to high pressure conduit B with conduit A being alternatively being fitted with expansion valve **10'**, going to intake valve **16**-B during intake stroke, as in FIG. **2**-C. While operating in mode 2 or 3 with compressed secondary supercharging air, injected preferably with pressure adjusted in conduit B, goes directly into the power cylinders through inlet valve **16**-A during the compression stroke, even as late as during combustion.

When the liquid cooling system fails, a valve is turned on conduits F and G (not shown) which diverges from conduits **113** and **114** or from conduits **113'** and **114'** of FIG. **2**-C or any other compressed air source, which supplies highly compressed air, which is cooled or chilled. This air is pumped by a conduit branch (not shown) from conduits **113'** and **114'** or **113** and **114** and preferably into metering or expansion valve **4'** at inlet **4** of engine head. Now incoming air, which has been cooled and increased in pressure and density, passes through expansion valve **4'** alternatively, which can have a variable size opening, which can be controlled by the ECM-**27**, at inlet **4**, to air rail **5**, conduits **6**, air rail **7**, air conduit **8** and exhaust manifold **9** and to the atmosphere or the air can go from conduit **8** directly to the atmosphere. The engine head and block are then cooled by the compressed air or alternatively by the chilling effect of the absorption of heat by the expanding air, as it does work in expanding through valve **4'** or valve **10'**, pressure-drop-distributor **11** and distributor tubes **17***a* and **27***a*, as in FIG. **2**-C. Alternatively, the engine is further cooled by the primary air charge injection through expansion valves **10'** upline to inlet valves **16**-B, as described for FIG. **2**-C and FIG. **4**, which provide chill cooling, and in the engines of FIG. **3**, FIG. **4**, FIG. **7** and FIG. **10**, optionally having chilled air being injected through cylinder walls, as described for these engines, operating under description for FIG. **2**, FIG. **2**-C, FIG. **3**. and FIG. **4**. As more power is needed, the density of charge can be increased by increasing the pressure on the non-expanded charge from conduits **113"** and **114"** to high pressure inlet valve **16**-A. These lines **113'** and **114'** are alternatively fitted with pressure regulators D and E.

The engine can also be fitted with diminutive cooling fins **13**. The cooling fan, if still operating, will assist in the cooling. Also, the fan of any existing heater, FIG. **11** or **11**-B, item **27**, can divert cool pumped air to the now empty water jacket of the engine. In addition, the pistons may be cooled by splash-oil cooling, in which oil-cooling radiator will be small and can be protected by engine components and armor.

The New Cycle Engine is inherently cooler operating as a study of the working cycle shows and can be cooled very effectively by pumping compressed air or expanding chilled air through conduits in cylinder head and block, as described herein.

The efficiency of the engine is improved by compressing and cooling a large portion of the charge air, all in Design 4,

E-FILED
Thursday, 09 February, 2006 05:31:11 PM
Clerk, U.S. District Court, ILCD

outside of a hot firing cylinder and by more complete combustion because of better mixing of the fuel/air charge. Efficiency is also improved by the extended expansion process in Design 3 through Design 6 and by thermodynamic improvements inherent in a denser air charge. Fuel economy is further improved by a greater power-to-weight ratio.

The engine may be operated preferably in the single mode (3) operation, or alternatively and selectively in mode 1 or mode 2.

Power is increased by the improved thermodynamics of a denser charge, which also allows more fuel to be utilized and by more complete combustion and by reduced compression work.

Emissions are less because of low peak temperatures and pressures and by more complete combustion. In both current and HCCI Diesel engines, particulates (both smoke and nano-particles) are very significantly reduced by the more complete combustion due to the pre-mixing (homogenization) of fuel/air charge before ignition and by the low temperature oxidation process. HC and aldehydes are reduced by injected air sweeping out piston ring crevices and other close tolerance areas between piston and cylinder wall.

Durability is improved by the overall cooler working cycle and low peak temperatures and pressures, and in some duty cycles, lower RPM allowed by higher torque.

Air compressor(s) would be compact, low profiled and armored, with conduits being of high tensile strength. Some of the compressed air can be diverted and expanded in cooling jackets around the compressor(s) and oil cooler, if the latter is used. The chief advantage of optional operation of modes 1 or 2 is that at any time ancillary compressor **2**, coolers **11** and **12** are damaged, the vehicle operates in mode 1 to allow the vehicle to continue functioning with adequate power and to return home.

Results

1) Low peak temperatures and pressure
2) A homogeneous combustion charge
3) A denser charge
4) Greater efficiency
5) Greater engine durability

Advantages

1) Lower polluting emissions
2) Greater power
3) Greater torque
4) Increased vehicle range
5) Longer engine life
6) Multi-fuel capability
7) Greater reliability

The ability to auxiliary-cool the engine on demand, coupled with multi-fuel capabilities and increased vehicle range, greatly reduces logistics problems for the military on both land and sea.

Referring now to FIG. **6**, there is shown a cross-section of a partial engine block **12'** and a cylinder liner **12** containing passages **6** on the exterior of the cylinder liner **12** between cylinder liner **12** and engine block **12'** for passage of pumped or compression chilled air of which passages **6** have fins or wire mesh, **6'** arranged for transferring heat from the cylinder liner to the passing expanding air.

4-Stroke, Air-Cooled Engine Operating in Operational Design 1–6

Referring now to FIG. **7**, there is shown a perspective view (with portions in cross-section) of the cylinder block and head of engine similar to the engine of FIG. **3**, operating in a 4-stroke cycle, operating in either system of Operational Design 1 through Design 6, as described for engine of FIG. **2**, FIG. **2**-B, FIG. **2**-C and FIG. **5** and representing a second embodiment of the apparatus of the present invention from which a second method of operation can be performed and will be described. Among its other components, this embodiment is seen as showing a means of controlling engine temperatures by expanding highly compressed air through port **4** and cooling channels in engine or alternatively through expansion valve **4'**, as described for expansion valve **10'**, pressure-drop-distributor **11** and evaporator tubes **17***a* and **27***a* in FIG. **2**-C and FIG. **11**-B, throughout passages in the engine, at such a time liquid cooling system has failed, and showing an optional automatic valve **2'**, providing means of better mixing of air-fuel charge and of managing initial pressure ratios in the engine and for closing inlet port from conduit B while intake valve **16**-A is closing. Alternatively, chilled charge air can be supplied to operate the engine as described for FIG. **2**, FIG. **2**-C, FIG. **3**, FIG. **4**, FIG. **5** and FIG. **11**-B, using any high-performance compressed-expanded-air cooling system, optionally combined with expansion valve **4'** or **10'** and associated apparatus as described for engine of FIG. **2**-C, FIG. **3** to FIG. **5** and FIG. **2**-D for current technology 2-stroke and 4-stroke Otto and Diesel Cycle engines.

Military Model of 4-Stroke Triple Mode Engine

The operation of the engine of FIG. **7** is the similar to that of FIG. **2**, FIG. **2**-C, FIG. **3** and FIG. **5**, with some exceptions. The preferred method of operation is that of FIG. **2**-C, operating in any of Operational Designs 1–6 and preferably operating in mode 2 as described for the same engines.

Operation of 4-Stroke New Cycle Engine

The operation of the engine is the same as any design from Design 1 through Design 6 with features described for the engine of FIG. **2**, also suitable for FIG. **2**-B, FIG. **2**-C, FIG. **4** or FIG. **5** for greater torque, power, and durability with low fuel consumption and ultra low polluting emissions. The engine of FIG. **7** operates in a first mode and an optional second mode as described for engines of FIG. **1**–FIG. **4**.

Mode 2 Operation

Mode 2 is the preferred means of operation of the engine for military duty due to the ease of switching to a more reliable mode of operation at such time that ancillary compressors or intercoolers may become disabled. While operating with greater power (mode 2), switching to mode 1 converts the engine to the same power output as a conventional engine, while still providing reliability and high fuel economy.

Cooler Working Cycle

The New Cycle Engine is inherently cooler operating as a study of the working cycle shows, and can very effectively be air-cooled or chilled air cooled by pumping cool, highly compressed air through inlet port **4** or alternatively through an expansion valve to **4'** low pressure conduits "evaporator" in cylinder head, walls and block, as described heretofore in FIG. **5** and FIG. **6**.

The efficiency of the engine is improved by compressing a large portion of the air charge outside of a hot firing cylinder, by more complete combustion because of better

mixing of the fuel/air charge, by improved thermodynamics of the denser charge and by the extended expansion process in Operational Designs 3 through 6. Fuel economy is further improved by a lighter engine (greater power-to-weight ratio).

Power is increased by the improved thermodynamics of a much denser charge, which also allows more fuel to be utilized, by higher efficiency, by more complete combustion and by reduced compression work. (In all Designs, the supplementary, secondary charge is injected cooled, very dense, not being expanded, and the operation of which is better described for the engines of FIG. **2** and FIG. **2**-C.).

NO_x emissions are less because of low peak and overall temperatures and by more complete combustion. In addition, particulates (both smoke and nano-particles) are significantly reduced in both the spark ignited and HCCI engines (fueled by gasoline or diesel oils) by the more complete combustion due to the pre-mixing (homogenization) of fuel/air charge before ignition. In any of the Designs, piston ring crevices and other close tolerance areas between piston and cylinder wall can be cleaned out by injected air (see FIG. **5** or FIG. **11**-B) for lower HC and formaldehyde.

Durability is improved by the overall cooler working cycle and low peak temperatures and pressures and by lower RPM allowed by greater torque. Other than the exceptions described for high-pressure supplemental, secondary charge air injection, operation and auxiliary cooling for FIG. **7** are the same as that of FIG. **2**, FIG. **2**-B, FIG. **2**-C engines operating in any of the Operational Designs 1 through 6.

Results

1) Low peak temperatures and pressure
2) A homogeneous combustion charge
3) A denser charge
4) Greater efficiency
5)Greater engine durability

Advantages

1) Lower polluting emissions
2) Greater power
3) Greater torque
4) Increased vehicle range
5) Longer engine life
6) Multi-fuel capability
7) Greater reliability

The ability to auxiliary chill-cool the engine air charge on demand, coupled with multi-fuel capabilities and increased vehicle range, greatly reduces logistics problems for the military on both land and sea. The expansion valve **10'** of FIG. **2**-C, and FIG. **5** can be used to cool the engine and to chill the charge air of the 4-stroke (high-pressure stream only for the 2-stroke engine) and in both, can be combined with a fast acting cylinder intake valve into one unit for a two functions-in-one valve.

2-Stroke Air-Cooled Engine Operating in Operational Designs 8(a)–8(d)

Referring now to FIG. **8**, there is a perspective view (with portions in cross-section) of the cylinder block and head of an internal combustion engine, operating in a 2-stroke cycle and representing a first 2-stroke embodiment of the apparatus of the present invention from which still another method of operation can be performed and will be described. Among its other components, this embodiment is seen as alternatively having a conventional air charging and engine cooling system for mode 1 operation or having a highly compressed air or compression air chilled air supercharging and engine cooling system (mode 2 operation.)

Military Model 2-Stroke New Cycle Engine

The operation of the 2-stroke engine is somewhat similar to the basic 4-Stroke New Cycle Engine System for greater torque, power, and durability with low fuel consumption and ultra low polluting emissions. The operation of this particular design is as follows:

Operation of the 2-Stroke New Cycle Engine with primary and supplemental, secondary air charge (For Engines of FIG. **8**, FIG. **9** and FIG. **10**).

The preferred mode of operation is mode 2 in which the engine is capable of immediately switching to mode 1 operation at such time ancillary compressors and/or intercooler systems for producing the supplementary air charge may become inoperative eg., in battle support. In mode 1, a vehicle will still have the power of a conventional engine to continue its mission and to return home safely.

Operational Design 8(a)

Piston **22** is at (BDC) (after power stroke) and high-pressure inlet valve **16**-A is closed.

A Roots Type Blower and conduits (not shown) supplies lightly compressed air for scavenging and cylinder charging to inlet ports **11** of cylinder **12**, or alternatively, conduit **27'***a*, as in FIG. **2**-C supplies air to inlet ports **11**, optionally expanded through expansion valve **10'**, pressure-drop-distributor **11**, evaporator tubes **17***a* and **27***a* for exhaust scavenging, cooling and charging of cylinder **12** with fresh chilled air. (If compression chilled, the low pressure charge to intake valve **16**-B can be expanded to a cold 5–10 psig pressure, more or less.)

Mode 1

Exhaust valve **8**-B is open. Exhaust Blow-Down has already occurred and fresh cooled or optionally chilled air from ports **11** is still entering the cylinders. Piston **22** begins to rise in the compression (1st) stroke and as piston **22** closes inlet ports **11**, exhaust valve **8**-B closes to trap as large volume of air as possible. This produces a normal optionally cool or chilled compression ratio which is equal to the expansion ratio. The compression (1st) stroke continues and near TDC, fuel is added, if not present, and the charge is ignited for the power (2nd) stroke and at near BDC or the appropriate point, exhaust valve **8**-B opens for the exhaust blow-down and fresh scavenging, charging air enters ports **11**, now open, and another cycle begins. This completes one normal power cycle.

Optional Mode 2 for Greater power

Exhaust valve **8**-B is open. Exhaust blow-down has already occurred and the cylinder **12** has been scavenged and charged by fresh air entering ports **11**. Piston **22** begins to rise in the compression stroke, closing ports **11** as exhaust valve **8**-B closes. High pressure air inlet valve **16**-A opens at any point deemed feasible during compression stroke to inject a dense, cool, high velocity, supplementary, secondary air charge, which is externally compressed in one or more stages as from conduits **113'** and **114'** in FIG. **2**-C and into inlet conduit B in FIG. **8**. Compression continues and near TDC, fuel being present, the charge is ignited and the power (2nd) stroke occurs for great power and low polluting emissions. At the appropriate point, exhaust valve **8**-B opens and the cylinder is scavenged and filled with fresh, cool charge. This completes one very powerful and clean power cycle.

The supplementary supercharging air can be compression-expansion chilled, as from expansion valve **10'**

and conduit **27'***a*–**27***f* of FIG. **2**-B. Depending on the temperature and pressure before being expanded, the pressure passing intake valve **16**-A during the compression stroke, can be adjusted to as much as a very cold 5–7 atmospheres pressure. If the secondary charge comes from conduits **113'** and **114'** in FIG. **2**-C, with no expansion as described for FIG. **2**-C, it would be injected through intake valve **16**-A somewhat less cooled, but much greater in density and pressure. The pressure to conduit **16**-A may be reduced or may require a pressure control valve D and E on conduits **113'** and **114'** as in FIG. **2**-C.

Optional Mode 3

Modes 1 and 2 are combined by eliminating intake valve **16**-A deactivator with the engine always operating with a supplementary, secondary air charge injection.

Operational Design 8(b)

Mode 1

In this design, one power cycle has ended. Exhaust valve **8**-B is open. Exhaust Blow-Down has already occurred and fresh cooled air from Roots Blower or similar blower types or air chilled from conduits **27'***a*–**27***f*, FIG. **2**-C and ports **11** has scavenged and is still charging cylinder **12**. Exhaust valve **8**-B closes and piston **22** begins to rise in the compression stroke, closing inlet ports **11** and trapping as large a charge as possible. But, in this Design 8(b), the combustion chamber is very large, resulting in a very low (substandard) compression ratio for the cylinder. For example, rather than, say a 20:1 compression ratio, this design would produce a compression ratio of perhaps 10:1 or less. For a gasoline engine, the compression ratio may perhaps be 5:1 or less.

Piston **22** rises in the compression (1st) stroke and near piston TDC, fuel is added, if not present. The charge is ignited for the power (2nd) stroke and at the proper point in the power stroke, exhaust valve **8**-B opens for the exhaust Blow-Down and at bottom of power (2nd) stroke ports **11** are uncovered to admit scavenging and charging air to begin another cycle. (With this substandard compression ratio, the heat-of-compression for the primary air charge can be as little as 1/5 that of normal engines for low heat-of-compression and low emissions. This completes one clean power cycle for mode 1 auxiliary operation, e.g., for continuing in battle and returning home safely if auxiliary air compressor-cooler system is damaged. (Mode 1 operation is especially feasible when the primary air charge is boosted significantly in pressure).

Mode 2, Preferred

Exhaust valve **8**-B closes, as the compression stroke begins closing cylinder ports **11** and **12** being charged with fresh air. Somewhere during the compression stroke, valve **16**-A opens and injects a very dense high-pressure, non-expanded, cooled supplementary, secondary air charge as from conduits **113'** and **114'** of FIG. **2**-C or optionally chilled air from conduit **27***a* of FIG. **2**-C. The supplementary supercharging secondary air charge can bring the density of the total charge to that of a normal engine, say with the nominal 20:1 compression ratio. The secondary charge can produce, selectively, even 40:1 compression ratio density or a much greater density and can greatly supercharge the engine with low peak temperatures and pressures, which with the better mixing of the cool charge produces much greater power with ultra low emissions. (The amount of heat-of-compression for the supercharging secondary air charge depends on what point in the compression stroke that portion is injected.) The "effective" compression ratio for the supplementary portion of the charge can be as low as 2:1 or 3:1 for again ultra low compression ratio. Yet, as stated, the charge density can have the density (compactness) of a 40:1 compression ratio or even much higher.

Mode 3

Modes 1 and 2 are combined for simplicity to form mode 3. This is accomplished by eliminating the system for temporarily deactivating intake valve **16**-A and/or compressor **2** operation, as is done in mode 1 operation.

Optional Design 8(c). Mode 1

A power cycle is completed and for some distance after closing of ports **11** by piston **22**, in the scavenging, charging (1st) stroke, the exhaust valve **8**-B stays open during the first part of the compression stroke to expel a portion of the fresh air charge in order to trap a smaller-than-normal volume of charge air and then exhaust valve **8**-B closes. The compression (1st) stroke continues and near piston TDC, fuel is added, if not present and ignited, producing the power (2nd) stroke and at near BDC or at the appropriate point, exhaust valve **8**-B opens and exhaust Blow-Down occurs by blower or compressor, and cylinder is scavenged and filled with cool, fresh charge air which can be cool or chilled. This completes one cycle for adequate cruising power with an extended expansion process and low polluting emissions.

Mode 2

When more power is needed, the following takes place: After scavenging and charging cylinder **22**, at any point in the compression stroke deemed appropriate after closure of exhaust valve **8**-B, inlet valve **16**-A opens and quickly closes, injecting very dense, temperature adjusted supplementary charge air as from conduits **113'** and **114'** of FIG. **2**-C, or optionally expansion chilled, supplementary, secondary air or air-fuel charge from conduit **27'***a* of FIG. **2**-B. The compression stroke continues. Fuel is added, if not present, and near TDC of piston **22**, the charge is ignited and the power (2nd) stroke occurs for great power with low peak temperatures and with low polluting emissions with the expansion ratio still being greater than the effective compression ratio.

Capturing a subnormal initial charge produces a substandard "effective" compression ratio with a very low heat-of-compression. A denser than normal supplementary, secondary cool air or cold charge produces low heat-of-compression also, and together still produces an extended expansion ratio. As in the 4-stroke engine, the effective compression ratio and hence, the amount of heat-of-compression for the supplementary, secondary charge depends on the point in the compression stroke the secondary charge is injected. The compression ratio for the supplementary, secondary air charge can be as low as 2:1 or 3:1 with a charge density equal to 20:1 or 40:1 or greater.

Should ancillary compressor **1** or **2** or intercooler system become damaged while operating in mode 2, the engine instantly switches to mode 1 operation and continues to operate with normal engine power to continue operation and to return home. This makes mode 2 operation the preferred system for the military.

Mode 3

This method of operation of the engine of FIG. 8)*c*) is by eliminating the deactivator for intake valve **16**-A, thus combining mode 1 and 2 into a simple operating mode 3 system, except for military for which mode 2 is preferred.

Operational Design 8(d), Mode. 1

In another alternative Operational Design, a power cycle is completed and piston **22** continues to rise in the scavenging-charging (1st) stroke as exhaust valve **8**-B remains open to near TDC, where it closes after cooling cylinder and expelling nearly all of the fresh, cold charge which was induced into cylinder **12** by way of inlet ports **11**. At the point near TDC, that exhaust valve **8**-B closed, high-pressure intake valve **16**-A opens and closes, injecting the entire working air charge which is very dense, cool and of high velocity and either pre-mixed with fuel or injected simultaneously with fuel, with the engine having a cool effective compression ratio of perhaps 3:1 or 2:1 or less. The charge is ignited near TDC as soon as intake valve **16**-A closes for the power stroke with an extended expansion ratio. (This Operational Design 4 of FIG. **2** engine is the easiest design in which to air cool the engine structure. The latter system is much like putting a cartridge in a rifle and firing same for each power stroke. The secondary and only air charge in this design can be the highly compressed, cool air as from conduits **113'** and **114'** of FIG. **2**-C or can be expansion chilled as from conduit **27'***a* as in FIG. **2**-B. In Operational Designs 8 through 10, fuel is injected, if not present, at any point deemed proper and near TDC the charge is ignited by spark, compression, modified HCCI or true HCCI.) (The air or air-fuel injection occurs just far enough before piston TDC to allow the charge injection and ignition to occur at the opportune point before or at TDC to produce the most power and efficiency.)

The burning gases depress the piston in the power (2nd) stroke for great power with both fuel consumption and polluting emissions greatly reduced. The new Cycle Engine is inherently cooler operating as a study of the working cycle shows and the engine block and head can very effectively be cooled by pumping cool highly compressed air through port **4** or alternatively, first through expansion valve **4'** in FIG. **8**, to conduits in cylinder head, cylinder walls **6** in FIG. **6** and block, all of which are low pressure, and act as evaporator tubes as described herein for the engine of FIG. **5**.

The efficiency of the engine is improved by (a) thermodynamic improvements of increased charge density, by (b) compressing all of the air charge outside of a hot firing cylinder, by (c) more complete combustion due to better mixing of the fuel/air charge and by (d) the extended expansion process in Operational Designs 4 and in Operational Design 8(c).

Power is increased by (a) the improved thermodynamics of a denser charge, which also allows more fuel to be utilized, by (b) more complete combustion and by (c) reduced compression work.

Emissions are less because of (a) low peak temperatures and pressures, by (b) more complete combustion and by (c) particulates in Diesel engines (both smoke and nanoparticles) being significantly reduced by the more complete combustion due to the pre-mixing (homogenization) of fuel/air charge before ignition.

Durability is improved by the overall cooler working cycle and low peak temperatures and pressures and in some duty cycles, by low RPM allowed by greater torque.

In each of the 2-stroke engines of FIG. **8**, FIG. **9**, and FIG. **10**, the expansion valves **10'** which are alternative, can alternatively have variable openings (nozzle(s)), preferably controlled by the EMC-**27** to maintain optimum engine temperature and density in regards to polluting emissions and power requirements. For greater power, if utilizing chilled charge air, expansion valve **10'** nozzles may be opened further to direct a more dense charge into ports **11**, or alternatively, by opening valve R and allowing some or all of the high pressure effluent to bypass expansion valve **10'** by way of conduit X as in FIG. **2**-C. This will bring a denser and less expanded air or air-fuel charge into valve **16**-A, but may require pressure regulator on conduit **27'***a*–**27***f*, FIG. **2**-B. Either of these two systems, either separately or in combination preferably by EMC-**27**, which receives signals from sensors in the combustion chamber of cylinder **12** and perhaps other locations. (The alternative system of supplying denser, non-expanded, supplementary charge air to intake valve **16**-A as in FIG. **2**-C to engine of FIG. **8** can be as shown from conduits **113'** and **114'** of FIG. 2C with, perhaps optional pressure regulators D and E.) In this system the expanded chilled air (scavenging only) is from conduits **27'***a*–**27'***f* as shown also in FIG. **2**-C.

Results

1) Low peak temperatures and pressures
2) A homogeneous combustion charge
3) A denser charge
4) Greater engine durability

Advantages

1) Lower polluting emissions
2) Greater power
3) Higher efficiency
4) Greater torque
5) Increased vehicle range
6) Longer engine life
7) Multi-fuel capability
8) Greater reliability

The ability to auxiliary-cool the engine on demand or continuously, coupled with multi-fuel capabilities, the ability to continue operation after damage to supplementary air systems and increased vehicle range, greatly reduces logistics problems for the military on both land and sea.

2-Stroke Air-Cooled Engine Operating in Operational Design 9

Referring now to FIG. **9**, there is shown a perspective view (with portions in cross-section) of the cylinder block and head of an internal combustion engine operating in a 2-stroke cycle, and representing a second 2-stroke embodiment of the apparatus of the present invention from which still another method of operation can be performed and will be described. Among its other components, this embodiment is seen as having one atmospheric air intake, with one high pressure charge-air route B, a common air-rail and ports **11**-B leading from an optional Roots Blower and conduits (not shown), or alternatively, from compressor **1** and conduit **32** to provide an optional air charging system, or alternatively, a charge air cooling system with items **10'**, **11'**, **17** and **27'***a* as in FIG. **2**-C to inlet ports **11** of power cylinder **22** of FIG. **9**. The high pressure supplementary charge air route conduit B and intake valve **16**-A is supplied by conduits **15**-A of FIG. **2**, or optionally, conduits **114"**–**113"** as in FIG. **2**-C or by conduits **27'***a*–**27'***f* of FIG. **2**-B. Other components are an exhaust valve **8**-B and conduits **9** to the atmosphere. Also provided are the power and engine head and block air cooler system, including chill cooling by expansion valve **4'** as described for FIG. **5**, FIG. **7** and FIG. **8**.

Military Model of 2-Stroke New Cycle Engine

The operation of the 2-stroke engine, using charging Operational Design 8 through Design 10, is the same as described for the basic 2-Stroke New Cycle of FIG. **8** Engine's four alternate Operational Design systems 8-A through 8-D for greater torque, power, and durability, with low fuel consumption and ultra low polluting emissions. This engine, FIG. **9**, offers triple mode operation of the 2-Stroke new cycle engine with primary and supplementary, secondary air charge, the same as engine of FIG. **8** with the exception that an automatic one-way valve offers improvements as described for engine of FIG. **7**.

Additionally, auxiliary valve **2'**, which is automatic, will prevent charge-air back-flow from cylinder **7**. This feature will prevent any back-flow from occurring during the compression or expansion strokes of the engine of this invention. This feature can also be used to establish the initial pressure ratio of the engine, either variable or constant. When secondary charge air is being received through intake valve **16**-A, the intake valve **16**-A can be kept open during the compression stroke to near TDC of piston **22**, since automatic valve **2'** closes at such time the pressure in cylinder **12** approximates the pressure in intake runner conduit B. Therefore, the pressure differential between cylinder **12** and intake runner B will allow closure of automatic valve **2'**, even though intake valve **16**-A may still be open, allowing the initial pressure ratio of cylinder **12** to be controlled by the pressure of any charge air coming through intake runner B, which in turn is controlled by valves **3**, **5**, and **6** (as described for engines of FIG. **1** to FIG. **7**) and compressor speed for engines having a single stage of pre-compression. Valves **3**, **4**, **5** and **6** and compressor speed would control the initial pressure ratios for engines having two stages of pre-compression. There are also fast acting intake valves, some of which open and close in 40 degrees crank angle. The new Cycle Engine is inherently cooler operating, as a study of the working cycle shows, and can very effectively be cooled by pumping compressed, cool air or compressed air that is expanded through a expansion valve **4'** which chills conduits (evaporator) in cylinder head, walls and block, as described herein for the engine of FIG. **5**.

The efficiency of the engine is improved by (a) thermodynamic improvements inherent in greater charge density, by (b) compressing a large portion or all of the air charge outside of a hot firing cylinder, by (c) more complete combustion because of better mixing of the fuel/air charge and by (d) the extended expansion process in Operational Designs 8(c) and 8(d).

Power is increased by (a) the improved thermodynamics of a denser charge, which also allows more fuel to be utilized, by (b) more complete combustion and by (c) reduced compression work.

Emissions are less because of (a) low peak temperatures and pressures, by (b) more complete combustion and (c) particulates (both smoke and nano-particles) in diesel fuel use are significantly reduced by the more complete combustion due to the pre-mixing (homogenization) of fuel/air charge.

Durability is improved by the overall cooler working cycle and low peak temperatures and pressures and by low RPM, the latter allowed by higher torque.

Results

1) Low peak temperatures and pressure
2) A homogeneous combustion charge
3) A denser charge
4) Greater efficiency
5) Greater engine durability

Advantages

1) Lower polluting emissions
2) Greater power
3) Greater torque
4) Increased vehicle range
5) Longer engine life
6) Multi-fuel capability
7) Greater reliability

The ability to auxiliary-cool the engine on demand coupled with multi-fuel capabilities, much greater power and increased vehicle range greatly reduces logistics problems for the military on both land and sea. In addition, 2-stroke Diesel Cycle engines, of which over fifty different applications are currently used by the military for land and water transportation as well as for stationary use, can be readily retrofitted for the new supplementary cold air supercharged power cycle and compressed air or compression-expansion chilled engine cooling, as described for FIG. **8**.

2-Stroke Air-Cooled Engine Operating in Operational Design 10

Referring now to FIG. **10**, there is shown a part sectional view through one power cylinder of a 2-stroke engine at the intake and exhaust valves showing an optional method (adaptable to other embodiments of the present invention) of preventing charge-air back flow and of optionally automatically adjusting the charge pressure-ratio of the cylinder during the air charging process, and a system for providing a supplementary, secondary charge air injection directly through valve-in-head and through the cylinder wall for better mixing of charge and reducing formaldehyde formation.

Military Model of 2-Stroke New Cycle Engine

The operation of the 2-stroke engine is very similar to the basic 2-Stroke New Cycle Engine System of FIG. **8** and FIG. **9**, for greater torque, power, and durability with low fuel consumption and ultra low polluting emissions. The operation of this particular design is this:

Operation of the 2-Stroke New Cycle Engine

The operation of engine of FIG. **10** is the same as that of the engines of FIG. **8** and FIG. **9** for mode 1 operation, except that in mode 2 and 3 a difference is being able to inject the supplementary, secondary air charge through ports in the cylinder wall and ports **17**A and **17**B and alternatively to simultaneously inject cold supercharging air through an automatic valve **2'** or optionally directly through port **2** in cylinder head at valve **2'** with valve **2'** (shown in phantom) optionally being absent.

The supplementary, supercharging air charge for mode 2 and mode 3 in this design is compressed and cooled from conduits **113'** and **114'** of FIG. **2**-C or alternatively, compressed and chilled from conduit **27'***a*, as seen in FIG. **2**-B, is injected into the cylinder **12** by inlet valve **16**-A, (after cylinder scavenging and charging and ports **11** are closed by piston **22**), and by conduit **17**-A and inlet port(s) **17**-B, which optionally can be one or many, and located in cylinder wall **12** at any place deemed proper for best mixing of charge. (For Operational Design 4 operation, the cooling primary air charge is expelled and at piston near TDC, the entire working charge is injected through intake valve **16**-A.) If optional automatic inlet valve **2'** and accompanying opening (not shown) to inlet valve **16**-A is utilized, the air pressure from intake valve **16**-A, when open, would

depress valve **2'** to inject the high-pressure from the top and back-pressure on the incoming charge by valve **2'** would force a substantial part of the incoming charge to enter conduit **17** and **17-A** and pass into cylinder **12** through port(s) **17-B** for good air-fuel charge mixing. Besides aiding the mixing of the air-fuel charge, the cool high-pressure air from port(s) **17-B** will sweep out ring crevices and space between cylinder wall **12** and piston **22** to reduce HC and the formation of formaldehyde.

Optional automatic valve **2'**, if used, will also increase the velocity of the charge entering the cylinder from directly past valve **16-A** and that from lower port(s) **17-B**. The New Cycle Engine is inherently cooler operating, as a study of the working cycle shows. It can also be effectively chill-cooled by pumping cool, highly compressed air through port **4** in engine block or optionally, through a metering or expansion valve **4'** to inlet port **4** to conduits (the "evaporator") in cylinder head, walls and block, as described for the engines of FIG. **5**, FIG. **8** and FIG. **9**.

The efficiency of the engine is improved by, (a) compressing a large portion of the air charge outside of a hot firing cylinder during high power operation, by, (b) more complete combustion because of better mixing of the fuel/air charge by, (c) the thermodynamic improvements in greater density of the charge and by (d) the extended expansion process in Operational Designs 8(c) and 8(d).

Power is increased by, (a) the improved thermodynamics of a denser charge and which also allows more fuel to be utilized, by (b) more complete combustion and by (c) reduced compression work.

Emissions are less because of (a) low peak temperatures and pressures, by (b) more complete combustion and (c) a significant reduction of particulates (both smoke and nano-particles) in diesel fueled engines, resulting from more complete combustion, which in turn, is due to the pre-mixing (homogenization) of fuel/air charge, (in high-pressure supplementary, secondary charge only for 2-stroke engines), before ignition by spark or by HCCI. In this design, the secondary air charge is injected through port(s) **17-B** in the cylinder and optionally, through port at **2** or through automatic valve **2** in order to cool, mix, increase charge density and to clean out piston ring crevices where unburned fuel resides and to sweep out other narrow passages between piston and cylinder wall in order to reduce HC and formaldehyde emissions.

Durability is improved by the overall cooler working cycle and low peak temperatures and pressures and by lower RPM, the latter allowed by greater torque.

The operation of the engine of FIG. **10** is the TRIPLE MODE system described for engine of FIG. **8**, utilizing either of Operational Designs 8a–8d, with the preferred mode being mode 2. The advantage of mode 2 operation is that should compressors and coolers be damaged as in battle situations, the engine is switched to mode 1 operation and continues to operate and return home, still with the power of normal engines.

Results

1) Low peak temperatures and pressure
2) A homogeneous combustion charge
3) A denser charge
4) Greater efficiency
5) Greater engine durability

Advantages

1) Lower polluting emissions
2) Greater power
3) Greater torque
4) Increased vehicle range
5) Longer engine life
6) Multi-fuel capability
7) Greater reliability

The ability to auxiliary-cool the engine on demand and to continue to operate in mode 1 if the compression system is damaged, coupled with multi-fuel capabilities and increased vehicle range, greatly reduces logistics problems for the military on both land and sea.

Dual Air Pressure Levels Supplied by Pressure Amplifier

Referring now to FIG. **11**, (System A), there is shown a schematic view of a six cylinder engine, 4-stroke or 2 stroke, having both low and high-pressure charge air supplied by one or two initial stages of compression. The pressure in one line, **9'** is being amplified by a pressure amplifier and illustrates how one compressor **5** and a pressure amplifier **2** can supply either low or low boosted, and high-pressure air for operation of the new cycle engine or a constant speed engine, such as for power generation, pumping, etc. This pressure amplifier system may be used for any other appropriate need for high pressure gas or other fluids. The compressor-cooler system of the present invention is not limited to any particular type of compressor and cooler system.

The 4-stroke and 2-stroke engines of this invention require a supply of air or air-fuel charge presented to the engine **1'** at two different pressure levels and generally at different temperatures. This pressure amplifier system offers an advantage to both 4-stroke and 2-stroke designs.

Supplying and utilizing the pressure amplifier system is using one compressor **5** with proper conduits, valving, intercoolers and high-pressure distributing manifold **12**, and a second manifold **13** for distribution of the low pressure (primary) air charge for both 4-stroke and 2-stroke engines. Manifold **12** and **13** have optional pressure regulators indicated by numbers **14'** and **15'** (shown in phantom). These optional pressure regulators, if desired, or additional pressure regulations, could be placed on conduits **14"** and **15"** (shown in phantom) between manifolds **12** and **13** and inlet valves **16-B** and **16-A**, respectively.

An ancillary compressor **1** (in phantom) receives atmospheric air at port **8** which it compresses and sends either through air cooler **11** or, in whole or part, by-passes the air cooler **11** and conducts it to compressor **5** where the charge is compressed and passed through intercooler **6**, or cooler **6** is bypassed, in whole or part, by conduit **3'** and valve **2'**. The air is then divided into two streams at point **2"**, with part of the compressed air going through the low-pressure side of a pressure amplifier **2**, by way of valve **14**, and exits at valve **33**. The second part of the charge passes through the high-pressure end of the amplifier **2**, entering by way of valve **4** and exiting by valve **10**, where the high-pressure charge passes through intercooler **9** or, in whole or part, bypass systems **34** and **35** or partly through both cooler **9** and bypass conduit **34**, with the system being regulated by valve **35** and optionally controlled by ECM-**27'** of FIG. **2**.

In the amplifier **2**, the larger piston **7** with the greater piston face surface is depressed by the expanding air entering valve **14** from compressor **5**. Now, a second portion of the compressed air enters valve **4** to the smaller piston, which further compresses by pressure exerted by larger face **7** of piston **2**, and expels the second high-pressure part of the charge through valve **10** into conduit and cooler **9** or, wholly or partly, through bypass **34** and valve **35**, or partly through

each, where the temperature is adjusted to needed temperature for the manifold **12** to supply high-pressure air inlet valve **16**-A of engine of FIG. **11**. The low-pressure air charge also passes through a cooler or heater **11**' or, in whole or part, bypass system **34**' and **35**' and to manifold **13** and then to low pressure inlet valves **16**-B of engine of FIG. **11** or alternatively, to ports **11** of 2-stroke engine of FIG. **8**. Means for regulating pressure in manifold **12** and **13** are depicted as items **14** and **15**. Thus, pressure amplifier FIG. **11** is supplying high and low-pressure air at different temperatures and should be of value in other industrial functions.

Dual Chilled High-Pressure Air and Low Pressure Air Supply

Referring now to FIG. **11**-B, (System B) there is shown a schematic view of a six cylinder engine, 4-stroke or 2-stroke, having both low and high-pressure charge air supplied by one or two stages of pre-compression. The pressure to one line **9**' is being amplified by a pressure amplifier **2** and illustrates how one compressor **5** and a pressure amplifier **2** can supply either low or low boosted, and high pressure air, for operation of a constant speed engine of this invention such as for power generation, pumping, etc. The compressor-cooler system of the present engine invention is not limited to any particular type of compressor or cooler system.

The 4-stroke and 2-stroke engines of this invention require a supply of air or air-fuel charge presented to the engine 1' of FIG. **11** or FIG. **11**-B or alternatively, to 2-stroke engine of FIG. **8**, at two different pressure levels and generally at different temperatures, with the capability of expansion chilling the high pressure charge air. One means of providing such is by use of one compressor **5** with proper conduits, valving, intercoolers and optional high-pressure surge tank **12**, expansion valve **10**' and pressure drop distributor **11**" on the high pressure conduit **9**', leading to conduit **27**' and intake valve **16**-A of engine of FIG. **11**-B or FIG. **8**, and a manifold **13** for distribution of the low pressure (primary) air charge from valve **33** on low side of pressure amplifier **2**, as depicted in FIG. **11**-B. (Surge tank **12** and manifold **13** have optional pressure regulators, if needed, indicated by numbers **14**"*a* and **15**"*f* (shown in phantom)). The low pressure air is fed by the low pressure valve **33** on pressure amplifier **2** to cooler or bypass system **11**, **34** and **35** to optional manifold **13** and conduit **26**, leading to low pressure inlet valve **16**-B of engine of FIG. **11**-B or alternatively, to low pressure inlet ports **11** of engine of FIG. **8**, FIG. **9** or FIG. **10**.

Distributor tube **17***a* receives chilled air from expansion valve **10**' and delivers it in equal quantities to distributor tubes **27**'*a* and **27**'*f* to intake valves **16***a*.-A and **16**f-A of engine of FIG. **11**-B or alternatively, FIG. **8**, FIG. **9** or FIG. **10**.

2-Stroke Engines

For the designs of 2-stroke engines FIG. **8**, FIG. **9** and FIG. **10**, the pressure amplifier system of FIG. **11** and FIG. **11**-B will provide similar improvements for these designs by using high-pressure, cooled or chilled charge air going to cylinder input valves **16**-A in each design and low-pressure, cooled charge going to cylinder inlet ports **11**.

Otto and Diesel Cycle Engines

For FIG. **2**-D, current technology 2-stroke and 4-stroke Otto and Diesel Cycle engines, the high-pressure cooled or chilled dense air or air-fuel input to intake valves **16**-A would be utilized for performance improvements. The low-pressure output of the pressure amplifier could be returned to suction side of compressor **1** or compressor **2** and would be mandatory if fuel is premixed with the air.

Referring now to FIG. **12**, there is shown a pressure-volume diagram (which is a compilation of 4 diagrams) for a high-speed Diesel engine, compared to the engines of this invention, showing three stages intercooled compression and a fourth stage of uncooled compression, which arrangement is suggested for optimum power and efficiency for the engine of this invention.

Note 1—In FIG. **12**, the travel distance of the line for engine B on the horizontal coordinate, indicates the theoretical volume at the greater density. The density is kept at that level at the actual combustion chamber volume (as shown by dashed line V) regardless of the density, by pumping in more charge at the backside.

There are several features that improve the thermal efficiency of the engine of this invention. Greater power to weight ratios will provide a smaller engine with less frictional losses. Increased torque allows much lower RPM, again reducing frictional loses. The extended expansion ratio results in higher thermodynamic efficiency cycle, which is shown in theoretical considerations. There are also definite efficiency gains in a "staged" compression process, even with external compressors with associated piping, intercoolers and aftercoolers, etc. There is a very significant energy savings when air is compressed in intercooled stages. Less energy is used in compressing a charge to 500 psi in 2, 3 or 4 intercooled stages than is used to compress the hot charge to the same 500 psi in a conventional engine. A normal engine uses approximately 20% of its own energy produced to compress its own air charge. Calculations show a significant energy savings in an engine, if the air is compressed in aftercooled stages. Compressing a charge in only two stages to 531 psi (a 13:1 compression ratio) reduces the energy used by 15.8% over compressing to the same 531 psi level in a single stage, as does the Otto and the Diesel Cycle engines. Three stages of intercooled compression raises the savings to 18%. This is the ideal. Degradation from the ideal should not exceed 25%, which leaves a 13.5% energy savings. This 13.5% energy savings times the 20% of a normal engine's power used for compressing its own charge, is a 2.7% net efficiency improvement by the compression process alone. This is one of the advantages of the engine of this invention, which adds to the other thermal efficiency improvements. The dense charge, along with the large expansion ratio (the latter is several designs) provide improvements in fuel efficiency, greater torque, power and durability, while lowering polluting emissions.

Air Bypass Valve (ABV) Control Operation

An engine control module (ECM) **27** controls the air cooler bypass valves **3** and **5**. The bypass valves may be a shutter type valve as illustrated to pass part, all or none of the air charge in either direction, or valves **3** and **5** may be of a helical solenoid or other type of valve which can pass part or all of the air charge through bypass conduits **121** and **122** and part or all through air coolers **10**, **11** and **12** for fine control of the temperature and density of the air charge. The ECM receives signals from sensors, such as an engine coolant sensor, a crankshaft position sensor, camshaft position sensor, a manifold absolute pressure sensor, a heated oxygen sensor and pressure and temperature sensors, the latter two preferably placed in the combustion chamber.

To provide optimum air charging pressure for differing engine operating conditions, the ECM-**27** sends signals to

control air bypass valves **4** and **6**. These valves could be on-off solenoid valves, possibly vacuum operated, or they could be helical solenoids or other type of valve, which could remain closed or open part way or all the way in order to optionally re-circulate, part or all, of the air charge back through the inlets **110** and **8** of compressors **1** and **2** in order to optionally reduce or eliminate entirely the pumping pressure of either compressor **1** or compressor **2**, or both. Similar arrangements of air pressure control could be used for additional stages of air compression, if additional stages are used.

The operation is thus: The ABV valves **4** and **6** is controlled by signals from the ECM-**27** to control the angle of valves **4** and **6** to provide the optimum air charging pressures for various engine loads and duty cycles. When ABV **6** is opened partially, some of the air pumped through compressor **2** is passed back into the intake **8** of compressor **2** to reduce compression pressure. When ABV **6** is opened fully, all of the charge of compressor **2** is passed back through compressor **2**. Thus, compressor **2**, valves **3** and **4** and ECM-**27** can exert fine control of charge air density.

With this arrangement, combined with the arrangement of ECM-**27**, control of charge-air cooler bypass system for variable valves **3** and **5**, and in the optional design of **11**-B, the variable expansion valve **10'**, the temperature, density, pressure and turbulence of the charge-air can be managed to produce the desired power and torque levels and emissions characteristics in the power cylinder of the engine.

Engine conditions that could be monitored by ECM-**27** in order to affect proper engine conditions, in regard to control of ABV valves **4** and **6**, could include a fuel injection activity sensor, air temperature sensor at various points, manifold absolute pressure sensor, a heated oxygen sensor and/or other sensory inputs known to be used in internal combustion engines. The ECM-**27** controls both the shutter valves **3** and **5** and the air bypass valves **4** and **6** in order to maintain the optimum air charging density pressure and temperature at all engine operating duty cycles.

Alternate Combustion Systems

Referring now to FIG. **13**, there is shown a schematic transverse view of a pre-combustion chamber **38'**, a combustion chamber **38**, a piston **22** and associated fuel inlet **36**, a sparking or glow plug **37**, an air or air/fuel mixture inlet duct **8'** intake valve **20**, an exhaust duct **18'** an exhaust valve **17**, suggested for liquid or gaseous fuel operation for the engines of this invention or for any other internal combustion engine.

There are many choices of systems for compression or spark ignition for the engine of this invention, as described in FIG. **1** and FIG. **2**. Every fuel from gasoline to heavy diesel fuels, including the alcohols and gaseous fuels can be spark ignited or compression ignited (CI) in this engine, as well as by HCCI. One good system would be similar to the system shown in FIG. **13** or FIG. **19** for compressed natural gas, propane, hydrogen, gasoline, alcohols or diesel fuel. In this system, an extremely fuel rich mixture constituting the entire fuel charge is, preferably, injected into the pre-combustion chamber **38'**. The fuel could be injected through fuel duct **36** with or without accompanying heated or cool re-circulated exhaust gases or air. The air charge, some of which can accompany the fuel charge, would be compressed into the pre-combustion chamber **38'** by piston **22** during the compression stroke. Additional air, with or without additional fuel, could be introduced into the cylinder proper on the compression stroke through intake conduit **8'**. In either case, the second combustion stage in the cylinder proper would be with a lean mixture. The two-stage combustion system shown in FIG. **13** will operate in this manner

Pre-Combustion (First Stage)

Pre-combustion occurs in the pre-combustion chamber **38'** when fuel, in an amount much in excess of the amount of oxygen present, is injected through conduit **36** and ignited (injector not shown). This oxygen deficiency, along with the cooler, turbulent charge and lower peak temperatures and pressures, greatly reduces the formation of oxides of nitrogen. The combination of the hot pre-combustion chamber wall and intense turbulence promotes more complete combustion.

Post-Combustion (Second Stage

Post-combustion takes place at lower pressure and relatively low temperature conditions in the space above the piston in the cylinder as the gases expand from the first stage pre-combustion chamber into the cylinder proper. If there is additional fuel in the cylinder proper, the leaner mixture is ignited by this plasma-like blast from the pre-combustion chamber. The low temperature and the admixture of burned gases prevent any further formation of oxides of nitrogen. Excess air, a strong turbulent action, and the extended expansion process assure more complete combustion of carbon monoxide, hydrocarbons, and carbon.

The results of the engine of this invention, using the pre-combustion chamber **38'** of FIG. **13**, are: higher thermal efficiencies due to the greater expansion and a denser charge, along with a cooler exhaust and a lower level of polluting emissions, including oxides of nitrogen, and in addition, lower aromatics and particulates for diesel fuels.

Variable Compression Ratio and Double Power Designs

In following arrangements, there is shown schematic transverse sectional views of two optional cylinder designs of the engine of this invention which will convert the 2-stroke engine of FIG. **8** through FIG. **10** or any other 2-stroke engine to a one power stroke per piston stroke engine, and will convert the 4-stroke engines of FIG. **1** to FIG. **5** and FIG. **7** or any other 4-stroke engine to operate as a 1 power stroke per cycle engine.

By building any 2-stroke engine with all power cylinders double acting, the power to weight ratio can be doubled over the basic engine. One end of the cylinder fires and the other end is scavenged and charged on each piston stroke for a "nominal" one power stroke for each piston stroke (or two power strokes for each shaft rotation) of the engines of FIG. **8** through FIG. **10**. Use of double-acting power cylinders in the 4-stroke engine of FIGS. **1–5** and FIG. **7** converts the engine to a 1 power stroke per shaft rotation engine because two of the functions of a 4-stroke cycle engine are accomplished on each stroke of the piston.

Referring now to FIG. **14**, there is shown a double-acting cylinder with a means of varying beam **39** length to vary the compression ratio, which is accomplished by the beam end forming a scotch yoke **40** and fitting over the wrist pin **41** of the piston.

The double-ended piston **22"** can be linked to the end of a vertical beam **39** that pivots at the lower end **42**. A connecting rod **19'** is joined between the midpoint of the beam and the crankshaft **20'**.

Since the crankshaft **20'** does no more than transmit torque, its main bearings will be very lightly loaded. As a

result, little noise will reach the supporting casing. Because of the lever action, the crank (not shown) has half the throw of the piston stroke and can be a stubby, cam-like unit with large, closely spaced pins having substantial overlap for strength.

The compression ratio can be changed by slightly lengthening or shortening the effective length of the beam **39**. This can be done by the lower pivot plate **42** being attached to a block **43**, mounted slidably in a fixed block **44**, in which block **43** can be moved slidably by a servo motor **45**. The gear **45***a* rotated by servo motor **45** is much longer than the gear **44***a* on the screw **43***b*, which is rotatably attached to block **43** and rotates against threads in block **44**, causing gear **44***a* to slide back and forth on gear **45***a*, as block **43** reciprocates in block **44**. Thus, as a diesel, it could be started at 20:1 ratio and then shifted to a 13:1 ratio for higher efficiency and for less friction and stress on parts. This could also be important to allow use of alternate fuels.

Referring now to FIG. **15**. This same advantage holds true for this alternate design in which the pivot **47'** is between the connecting rod **19** and the piston **22"**.

The needed variation of the length of the beam **39** (shown in phantom), connecting the piston **22"** to the connecting rod **19**, can be accomplished by forming a scotch yoke **40** on the beam end fitting over the wrist-pin **41** of the piston **22"**, or by placing a double pivoting link **42'** between the pivot **47'** on the fulcrum of beam **39'**, with the pivot **42"** being attached to a non-movable pan **46** of the engine and the terminal end of beam **39'** being connected to connecting rod **19** by a pin **47**.

Alternatively and preferably, for heavy duty engines (marine propulsion, power production, etc.) the power take off of piston **22"** could be with a conventional piston rod **39'** being arranged between piston **22"** and a crosshead **20'**, with a connecting rod **19'** between the crosshead **20'** and the crankshaft (not shown).

Double-acting power cylinders when used in the engine of this invention, or any other engine, will be especially important where great power is desired and cooling water is readily available, e.g., for marine use or for power generation. These double-ended, double-acting cylinders of the engine of FIG. **14** and FIG. **15** can be used in all of the designs of this invention, or in any Otto or Diesel engine.

Double Burn "Dwell" Time

Referring now to FIG. **16**. There is shown a schematic transverse sectional view of a crankshaft, two connecting rods **19'** and **19"** and a beam **39** showing a means of providing extra loading and burn "Dwell" time at TDC of a conventional 2-stroke or 4-stroke engine and especially for the engine designs of the present invention, namely 4 stroke engines of FIGS. **1** through **7** and FIGS. **18** through **19-B**. The system of Double Burn Time of FIG. **16** is also important in 2-stroke engines of FIGS. **8** through **10**.

This layout for any engine provides for double the piston **22** turnaround time of a normal engine during the critical burn period. This is because piston **22** TDC occurs at BDC of the crank **48**. At this point, crank pin motion around piston **22** is subtracted from the straightening movement of the connecting rod **19'**, instead of being added to it, as in conventional engines. Reversing the usual action slows piston travel around this point, resulting in more complete combustion and further reducing emissions. This system allows more complete fuel burn and heat energy conversion into peak pressure before the power stroke begins. This enhances power per unit of fuel consumption and brake specific fuel consumption (BSFC), and reduces polluting emissions. It also allows the engine to operate under lean burn conditions.

The extra burn time, provided by the design of FIG. **16**, can be important in the engines of this invention and to any Otto or Diesel cycle engine.

Operation of the engine, constructed and arranged with the additional burning time, would be the same as the other engines of this invention, providing high charge density, low compression-ratios in some designs, with a mean effective pressure higher than conventional engines, but with more combustion time than other engines, while producing even less polluting emissions.

Since the crankshaft **48** in FIG. **16** does no more than transmit torque, its main bearings will be very lightly loaded. As a result, little noise will reach the supporting casing. Because of the lever action, the crank can have as little as half the throw of the piston stroke (depending on the point of the fulcrum), and can be a stubby, cam-like unit with large, closely spaced pins having substantial overlap for strength. This layout provides for twice the combustion time of the engine of this invention during the critical loading and burn period. This is because piston TDC occurs at BDC of the crank.

Constant Speed Engines

Whereas the preponderance of the foregoing specification describes embodiments and representative engines of the present invention which are optimized for duty cycles in vehicles such as automobiles, trucks, buses, tanks, trains and airplanes and describes systems and methods for varying power, torque and speed. The present invention finds useful application for obtaining high power and torque, while maintaining optimum fuel economy and low polluting emissions in less complex systems, such as constant speed engines, for example. FIG. **17** depicts alternate embodiments of the present invention which are representative of constant speed engines such as electric power generators, pumps and compressors, outfitted in accordance with the principles of the present invention.

The Engine of **100**[17]

Referring now to FIG. **17**, there is shown is a schematic presentation of an engine which represents any of the 4-stroke or 2-stroke engines of the present invention, outfitted for constant speed operation. The basic components of the engine **100**, such as compressors **1**, **2** and optional intercoolers **10**, **11**, **12** (shown in phantom) and their necessary associated conduits are preferably, designed for optimum operating parameters, having only the basic components. The various controls, shutter valves, air bypass valves and their associated bypass conduits, such as those in previously described embodiments, are preferably eliminated in order to reduce weight, cost and complexity of operation. In FIG. **17**, the engine **100** is shown, as outfitted, with a first ancillary compressor **1** and a second ancillary compressor **2**, optional intercoolers **10**, **11**, **12** (shown in phantom) and interconnecting conduits, all operating as would be understood with reference to the previous detailed descriptions and operating with two stages of precompression of the charge-air, intercooled or adiabatically compressed.

FIG. **17** shows a preferred setup for power generation with any of the engines of this invention. The power output shaft **20** of the engine **100** is coupled schematically by line **140** to power input shaft **20"** of generator **141** which has

electric power output lines **142**. As the shaft **20** of the engine **100** rotates the shaft **20"** of generator **141**, the amount of electric power produced by generator **141** is detected by sensor **143** and relayed to control unit and governor **144**. With various relays and integrated circuits, their overall purpose is to quantify and adjust the fuel input, power output and speed. To do this, they will:

1) Send messages by line **145** to fuel/air control (not shown) on fuel line **148** and speed control **56**.
2) Spark control by line **149** in order to advance or retard the spark in spark-ignited engines
3) Send messages through lines **146** and **146***b* for engines having fuel injection systems, e.g. for natural gas, gasoline or diesel fuel, or to fuel/air controls.

Control unit **144** also sends signals to control the proportioning valve **201**, (not shown) and to proportioning valves **209***a*, **209***b*, **209***c*, **209***d*, **209***e*, **209***f* and **209***g* shown in FIG. **1**-C to control the amount, if any, of exhaust gases re-circulated by these valves for re-burn in any engine of this invention utilizing this feature. Further explanation of the components and operation with the engines of the present invention is deemed unnecessary, as it would be understood by those skilled in the art having reference to the present disclosure.

The optional intercoolers **10**, **11**, **12** (shown in phantom) are preferably reduced in number or cooling capacity in the compression-ignited engine. This is made possible by a cooler working cycle and by low peak pressures and temperatures in the engines of this invention. The constant speed engine would be designed to produce the combustion chamber temperature desired at TDC of piston **22** which may require some of the air bypass systems and controls of the other engine designs.

The Engine of $100^{17\text{-}B}$

Referring now to FIG. **17**-B. There is shown an engine illustrated as a 2-stroke engine, but representing any of the engines of the present invention, 2-stroke or 4-stroke, which is coupled schematically by line **140** with an electric generator **141**. The engine and arrangements are similar in structure and operation as those shown and described for the engine of FIG. **17**, with the exception that engine of FIG. **17**-B, operating as either 2-stroke or 4-stroke cycle engine **100**, has only a single stage of pre-compression, optionally intercooled by intercoolers **11**, **12** (shown in phantom), of the charge air. As with the engine of FIG. **17**, intercoolers **11**, **12** are preferably reduced in cooling capacity in compression-ignited versions of the engine **100** of this invention. Also, as with the engine **100** of FIG. **17**, the governor, and other controls and the operation of the engine and generator would be understood by those skilled in the art having reference to the present disclosure. This engine also may require some of the bypass systems for compression and intercoolers illustrated for other engine designs of the present invention.

Ultra Low Emissions Engine with Extended Expansion Ratio Operating in Operational Design 11

Referring now to FIG. **18**. There is shown a schematic drawing of a six cylinder dual mode engine 100^{18} operating in a 4-stroke cycle which can be spark, compression or homogeneous charge compression ignited (HCCI).

Brief Description of Operational Designs 11 and 12

Operational Design 11, FIG. **18**. The engine is similar in structure to the 4-stroke engine of FIG. **2** and shows an alternative air compression system utilizing air intake **8** (in phantom) or air intake **8'**. FIG. **18** also shows four intercoolers **10**, **10'**, **11**, and **12**, and dual manifolds **13** and **14**. The alternate air induction system **8'** shown in FIG. **18** supplies unpressurized charge-air to low pressure intake valves **16**-B of the engine of FIG. **18** by providing atmospheric pressure air to the intake runners **32'** and **32"** and to intake valves **16**-B of each power cylinder. Optionally, a second air induction system also shown in FIG. **18** where air inlet **8** inlets atmospheric air to a turbo-charger **1** and cooler system **10** (all in phantom) to boost the pressure and cool the initial charge that is then directed optionally to conduit **32** and low pressure intake valves **16**-B where the charge is received compressed while expelling a large portion of the charge into compressing and cooling system, compressor **2** and intercoolers **11** and **12** and is then admitted to the inlet valve **16**-A of power cylinders **22** after piston **22** has passed point "E" in the last part of the power stroke.

Operation

In this concept, air at atmospheric pressure (from inlet **8'**), or pressure boosted by compressor **1** and cooled by intercooler **10** and through conduit **32**. FIG. **18**, is received by the intake (1st) stroke of piston **22** through intake valve **16**-B and then piston **22** turns around and the compression (2nd) stroke begins. Then, during the compression (2nd) stroke, much of the total charge, now being compressed, is expelled (this is part A of charge) through outlet valve **16**-C (indicated, but not shown) which quickly opens and closes at piston position E into a compression-cooling circuit system consisting of conduits **201**, **202**, intercooler **10'**, compressor **2**, bypass system **3**, **4**, intercoolers **11**, **12**, to manifolds **13**–**14**, conduits **15**-A, later to be injected by high-pressure intake valves **16**-A. That portion of the air charge (part A) is now further compressed and cooled with pressure buildup in manifolds **13**–**14**. (The compression stroke of piston **22** continues toward TDC, now compressing part B of the charge, that remaining in cylinder **7** after piston **22** passes point E and valve **16**-C has opened and closed). The cool dense A charge, now accumulated in the compression-cooling circuit, is then re-injected through high-pressure intake valve **16**-A above piston **22** crown after piston **22** has reached or passed the point (E) during the compression stroke and can be injected as late as during combustion. The charge A has been injected, cylinder compression of the now total air charge (B that remaining in cylinder after passing point E plus A, the injected portion.) continues, which is Operational Design 11. Near TDC of piston **22**, fuel is added, if not present, and the charge is ignited for the power (3rd) stroke followed by the scavenging (4th) stroke, as exhaust valve **17** opens, and another power cycle begins. This produces a denser extended expansion ratio charge with great power, low fuel consumption and low emissions.

The compression ratio of the cylinder is alternatively much greater (with, of course, much smaller combustion chamber compared to the volume of cylinder **7**) due to the necessity of retaining the improved density of the charge. The latter is allowed by the lower heat-of-compression allowed by the low "effective" compression ratio of both A and B portions of charge air or fuel-air. The charge portion A, which is highly compressed and cooled before re-injecting and igniting, has an "effective" compression ratio which can be as low as 2:1 to 5:1 for very low heat-of-compression and producing ultra low polluting emissions, especially NO_X. This is also true for portion B of charge.

In this Operational Design (11), although the "effective" compression is extremely low, the actual compression ratio, which is very high, equals the expansion ratio, with much improved power and efficiency per unit of fuel-air charge.

The system optionally operates in this fashion: The cylinder **7** has, say, an expansion ratio of 20:1 and the "effective" compression ratio is much less. Consider that the cylinder has a compression ratio of 20:1, at two-thirds of piston **22** stroke distance (point E), outlet valve **16**-C opens to expel air charge A at a low compression state since there is a pressure blow-down due to suction of compressor **2** which receives the expelled portion (A) of the charge. Piston **22** continues the compression stroke on B, the remainder of the charge, producing about a 5:1 "effective" compression ratio on B, the portion of charge remaining in the cylinder. The charge A received by the compressor **2**, which is pre-cooled by intercooler **10'**, is highly compressed now and again cooled by intercoolers **11** and **12**. This cool, dense charge is, after pressure build-up, re-injected into cylinder **7** above piston **22** after the piston has passed point E in which outlet valve **16**-C has closed and can be as late as TDC. Therefore, piston **22** is compressing the B portion of charge, that remaining in cylinder after expulsion of a portion A of charge through outlet valve **16**-C. The "effective" compression ratio of that portion is as stated, perhaps about 5:1. The highly compressed cool charge A re-injected could have an "effective" compression ratio of less than 4:1 since the distance from injection (after point E) to TDC is perhaps only 30% of piston travel distance. The total charge (A+B) then ignited near TDC to produce the power stroke, is cool, very dense and has an "effective" compression ratio of about 5:1 or less. Yet, piston **22** is depressed in the power stroke with the density of, and the expansion ratio of a 20:1 to 40:1 combustion ratio engine, depending on the volume of the combustion chamber. This system produces a more dense charge than does a 10:1 compression ratio engine, but with much superior power and efficiency with very low polluting emissions including particulates. This system also eliminates problems with spark-knock and pre-ignition. Fuel-air mixes can be used with diesel oils with spark ignition or HCCI operations.

Operational Design 11-B, FIG. **18**: As in Operational. Design 11, atmospheric or pressure boosted air (the latter cooled by intercooler **10**) is received by cylinder **7**, by intake valve **16**-B during intake (1st) stroke of piston **22**. At BDC, valve **16**-B closes. Then, compression (2nd) stroke begins. Ancillary valve **16**-C, which is alternatively automatic, opens quickly during the compression (2nd) stroke near piston TDC with nearly all of the compressed charge being expelled into a cooling circuit (like that described for Design 11.) Outlet valve **16**-C is then closed. At the same time, high pressure intake valve **16**-A opens (after valve **16**-C closes) and temperature adjusted cooled air, which has been building in pressure by rotating the crank shaft or is stored and is cool and stored in the compression cooling circuit, is now injected into combustion chamber **7'** near end of compression stroke TDC. Intake valve **16**-A now closes. Fuel is added, if not present, and the charge is ignited at or near TDC and the power (3rd) stroke occurs, followed by the scavenging (4th) stroke, as exhaust valve **17** opens and another power cycle is complete. The effective compression ratio in this Design is near zero, perhaps 2:1 or less for extremely low heat-of-compression, thus providing ultra low polluting emissions, but with power and low fuel consumption.

Shown in FIG. **18** is the compression and cooling system and a suggested engine control system, all consisting of an engine control module (ECM) **27**, two shutter valves **3** and **5**, two air bypass valves **4** and **6**, four intercoolers **10**, **10'**, **11** and **12**, two compressors **1** and **2** and a scheme of controlling the pressure, temperature and density by controlling air bypass valves **4** and **6** and shutter valves **3** and **5** and intake valves **16**-B and **16**-A and exhaust valve **17** (not shown.) Also indicated, but not shown, is an ancillary outlet valve **16**-C, positively or automatically activated. As described, the air pressure and temperature can be managed as desired. Air bypass valve **4** is alternatively closed to allow compressor **2** to fully compress the charge and shutter valve **3** is shown slightly open to demonstrate allowing part of the air to flow uncooled (hollow arrows) and some of the air cooled (solid arrows) to the manifolds **13** and **14**, all of which could be controlled by the ECM-**27** in order to provide an air charge at optimum density, temperature, and pressure. The hollow arrow in conduit **121** and **122** show how air bypass valve **4** can be partially opened to allow some of the air to bypass and return to the compressor **2** in order to finely adjust the pressure of the doubly compressed and cooled air charge that is injected in order to adjust the charge density and temperature to that desired. Alternatively, all of the air charge can be directed through the intercoolers **10'**, **11**, and **12** (and **10** for pre-compression), or partly through bypass conduits **121** and **122**, to the manifolds **13** and **14** for fine control of temperature. These controls could provide any air-fuel mixtures desired.

Results:

1) Adjusts the temperature of the entire charge.
2) Thoroughly mixes the charge (fuel, if not present is injected).
3) Increases the density of the charge.
4) Produces an expansion ratio greater than the "effective" compression ratio or with equal compression and expansion ratios.
5) Produces great turbulence.

Advantages:

1) Ultra low emissions.
2) Greater power.
3) Increased fuel economy.
4) Increased engine durability.
5) Multi-fuel capability.

Both designs have expansion ratios greater than the effective compression ratio. In either of the Operational Designs 11 or Design 11-B, blocking valve **16**-E (shown in phantom on conduits **15***a*-A and **15***f*-A in FIG. **18**) could be closed when starting the engine in order to more quickly build-up design pressure in manifolds **13** and **14**. Also, external or stored compressed air could be used to build up operational design pressure for quicker power build-up, The engines of this design may be ignited, even with diesel fuels, by spark, modified HCCI or HCCI as described herein.

Ultra Low Emissions Engine Operating in Operational Design 12

Referring now to FIG. **18**-B, there is shown a schematic drawing of a six-cylinder engine $\mathbf{100}^{18\text{-}B}$ operating in a 4-stroke cycle engine. The engine, which is depicted in FIG. **18**-B, is similar in structure to the 4-stroke engine of FIG. **18**. It can be operated in system of Design 11 or Design 11-B, as desired. FIG. **18**-B shows that it has a variant alternative, enhanced air cooling system useful for providing compression-expansion chilled engine charge air or air-fuel mix. It further shows two air compressors **1** and **2**, four intercoolers **10**, **10'**, **11** and **12**, with controls to alter charge density and temperature, each separate from the others, controlled by ECM-**27**. Conduits **121**, **122**, **113** and **114** lead

from the compressor-cooling system to expansion valves **10'** and **10"** of FIG. **18**-B, pressure-drop-distributors **11'** and **11"** and distributor tubes **17***a* and **17'***a*, which tubes distribute expanding air to conduit **27'***a*–**27'***f* and to intake valves **16***a*-A and **16***f*-A of engine power cylinders **7***a* and **7***f* of the engine of FIG. **18**-B. The expansion valve **10'**–**10"** passages are optionally variable, and along with bypass value R to conduit X, are controlled by ECM-**27** as indicated to provide management of pressure and temperature levels.

The operation of engine of FIG. **18**-B is the same as the operation of the engine of FIG. **18**, utilizing Operational Designs 11 or 12, with the primary air charge being optionally pre-compressed and cooled and when operating in Design 11 or Design 11-B with a large portion of the charge, always being highly compressed and cooled. Additional benefits are having broader control of pressure and temperature of both portions of the air charges. By utilizing variable expansion valves **10'**, **10"** and bypass system R and X, chilled air temperature, pressure and density output can be variably controlled by ECM-**27** to provide a dense, cooler charge for more power and lower polluting emissions.

The operating parameters and the advantages of this engine are the same as those described for the engine of FIG. **18** and FIG. **18**-B, using either Operational Design 11 or Design 12, with the added benefits provided by compression-expansion cooling of the charge air as described for engine of FIG. **2**-B.

The expansion of the chilled charge to high-pressure intake valve **16**-A can be varied from less than 1 atmospheric pressure to 5–6 atmospheric pressures to no expansion at all, as expansion valve **10'** can be opened to varying sizes or can be bypassed, partly or wholly, for a very dense, cool secondary air or air-fuel charge, always with great turbulence. (The latter may require pressure control valves **14"***a*–**14"***b* on conduits **27'***a* or **27'***f*).

Ultra Low Emissions Engine with In-Cylinder Compression Operating in Operational Design 13

Referring now to FIG. **18**-C, there is shown a schematic drawing of a six cylinder engine **100**$^{18\text{-}C}$ operating in a 4-stroke cycle which can be spark, compression or homogeneous charge compression ignited (HCCI). This new cycle engine can produce and utilize an air or air-fuel charge, having the density (compactness) of a 40:1 compression ratio and greater, with an "effective" compression ratio as low as 2:1 to 5:1 with very low fuel consumption and peak temperatures with ultra low polluting emissions. In this engine, except for initial pre-compression, all compression occurs in-cylinder.

Brief Description

The engine is similar in structure to the 4-stroke engine of FIG. **18** which shows and describes a charge air compression system with three stages of compression. With the exception of optional pre-compression of the primary air charge by compressor **1**, all compression occurs within the power cylinder, with charge cooling of the first two stages for a denser than normal charge and with an extended expansion process. The system utilizes air intake port **8** (in phantom) or air intake port **8'**. FIG. **18**-C engine also shows four intercoolers **10**, **10'**, **11** and **12** and dual manifolds **13** and **14**. One air induction system of using inlet port **8'** shown in FIG. **18**-C supplies unpressurized charge air to intake valves **16**-B of the engine of FIG. **18**-C by providing atmospheric pressure air to the intake conduits **32'** and **32"**, which then distributes the low pressure air to intake valves **16**-B of each power cylinder. An alternate air induction system also shown in FIG. **18**-C is where air inlet **8** inlets atmospheric air to a turbo-charger **1** and an intercooler **10** system (all in phantom) to pre-compress and cool the entire air charge that is admitted to cylinder **7** by the intake valves **16***a*-B–**16***f*-B of power cylinders **7***a*–**7***f*.

Referring now to FIG. **18**-D: In this concept (Engine of FIG. **18**-C), air, atmospheric or pressure boosted by turbo-charger **1**, and which has been cooled by intercooler **10**, optionally with temperature and pressure adjusted by control valves **5** and **6**, is received through intake valve **16**-B by cylinder **7** during the intake (1st) stroke of piston **22** while piston **22** travels from G to A in cylinder **7** of FIG. **18**-D. During the compression (2nd) stroke which now occurs, the major portion of the charge, portion A, being compressed, is expelled through outlet valve **16**-C of FIG. **18**-D. Valve **16**-C opens and quickly closes at the appropriate piston position points EO_1 and EC in FIG. **18**-D. Now part of the charge has been compressed through valve **16**-C, FIG. **18**-C into a cooling circuit system, composed of conduits **200**, **201**, **202**, intercoolers **10'**, **11** and **12**, conduits **109**, **113** and **114**, manifolds **13**, **14** and conduits **15***a*-A–**15***f*-A and, after pressure build-up is returned to intake valves **16***a*-A–**16***f*-A of cylinders **7***a*–**7***f* (FIGS. **18**-C and **18**-D).

During the compression (2nd) stroke, at the point EC that outlet valve **16**-C closed, FIG. **18**-D, outlet valve **16**-D opens for pressure blow-down as piston **22** travels from position EC to position F in FIG. **18**-D. At point F of piston travel, the in-cylinder pressure being significantly reduced by Blow-Down and optionally vacuum of suction line **16**-DC_2-A or B, valve **16**-D closes and intake valve **16***a*-A–**16***f*-A opens and closes quickly, re-injecting the A portion of the air or air-fuel charge into cylinder **7** after piston point F. With valve **16**-A now closed, compression continues and near TDC, fuel is added, if not present, and the charge is ignited for the power (3rd) stroke. At near BDC of piston **22**, exhaust valve **17** opens to expel exhausted gases into exhaust conduit **18** of FIG. **18**-C, which optionally conveys the exhaust gases to inlet of turbo charger **1** which optionally pre-compresses the incoming charge air.

An alternate means of operating outlet valve **16**-C is as follows: Intake valve 16-B opens during the intake (1st) stroke of piston **22** while piston **22** travels from G to A in cylinder **7** of FIG. **18**-D. During the compression (2nd) stroke which now occurs, the major portion of the charge, portion A, being compressed, is expelled through automatic outlet valve **16**-C of FIG. **18**-D. Valve **16**-C opens at EO_2 near piston BDC and closes at the appropriate piston position point EC in FIG. **18**-D. Now, the major part of the charge has been compressed through valve **16**-C, FIG. **18**-C into a cooling circuit system, composed of conduits **200**, **201**, **202**, intercoolers **10'**, **11** and **12**, conduits **109**, **113** and **114**, manifolds **13**, **14** and conduits **15***a*-A–**15***f*-A and, after pressure build-up is returned to intake valves **16***a*-A–**16***f*-A of cylinders **7***a*–**7***f* (FIGS. **18**-C and **18**-D). During compression stroke of piston **22** at piston position EC, automatic valve **16**-C closes and is held closed through the remainder of the compression stroke and through the scavenging and air intake strokes. As piston **22** turns around to begin the compression stroke at point EO_2, valve **16**-C is again opened by pressure differential. As the compression stroke takes place, valve **16**-C again closes at position EC and is again held closed until the next compression begins. At point EO_2, valve **16**-C becomes automatic.

During the compression (2nd) stroke, at the point EC that outlet valve **16**-C closed, FIG. **18**-D, outlet valve **16**-D opens for pressure blow-down as piston **22** travels from

E-FILED
Thursday, 09 February, 2006 05:32:07 PM
Clerk, U.S. District Court, ILCD

position EC to position F in FIG. **18**-D. At point F of piston travel, the in-cylinder pressure being significantly reduced by Blow-Down and optionally vacuum of suction line **16**-DC2-A or B, valve **16**-D closes and intake valve **16***a*-A–**16***f*-A opens and closes quickly, re-injecting the A portion of the air or air-fuel charge into cylinder **7** at piston point F. With valve **16**-A now closed, compression continues and near TDC, fuel is added, if not present, and the charge is ignited for the power (3rd) stroke. At near BDC of piston **22**, exhaust valve **17** opens to expel exhausted gases into exhaust conduit **18** of FIG. **18**-C, which optionally conveys the exhaust gases to inlet of turbo charger **1** which optionally pre-compresses the incoming charge air.

Operation of Engine FIG. **18**-C Shown Schematically in FIG. **18**-D

1) Intake valve **16**-B opens. The piston performs the intake (1st) stroke going from G to A which is BDC.
2) Piston **22** reverses and begins compression (2nd) stroke.
3) At point EO_2 outlet valve **16**-C opens and closes at point EC during the compression stroke.
4) Outlet valve **16**-D opens at point EC as soon as outlet valve **16**-C is closed.
5) Piston **22** continues for pressure blow-down between point EC and point F optionally with suction on conduit **16**-DC_2-A or B.
6) At point F, outlet valve **16**-D closes and intake valve **16**-A opens, the latter injecting the now cooled, compressed charge above piston **22** crown and quickly closes as piston **22** continues the compression stroke.
7) At near TDC, fuel is added, if not present, and the charge is ignited.
8) The expansion (3rd) stroke occurs.
9) Piston **22** reverses and scavenges the cylinder through valve **17** and conduit **18** by the (4th) stroke to complete one cycle.
10) Piston **22** draws in fresh air and at BDC, outlet valve **16**-C begins to function by pressure differential.

Operating Principles

When outlet valve **16**-C opens at point EO_2, a large portion of the air charge is compressed into the cooling storage circuit while piston **22** travels between points EO_2 and EC (where valve **16**-C closes) to cool and build proper pressure charge for re-injecting into cylinder **7** above piston **22** at point F. Between points EC and F, the pressure in cylinder blows down optionally out through valve **16**-D, aided by vacuum line **16**-DC2-A. (At this point [EC], the cylinder pressure must be reduced significantly in order to allow introduction of the compressed air or fuel-air [cooled or chilled by valve **16**-A, being optionally an expansion valve], at point F). If the air charge contains fuel, the discharged air-fuel charge through outlet valve **16**-D is directed by conduit **16**-DC to conduit **16**-DC2 which goes alternatively to A) suction side of turbo-charger, to B) suction conduit **105** or to C) intake port **8'** of conduit **32"**–**32'**. In any case, the fuel-air charge cannot be expelled into the atmosphere. Some of the work of compressing the part of the charge expelled could be restored with little back-pressure in cylinder **7**. Some of the alternative systems are: (See FIG. **18**-C).

1) Directing conduit **16**-DC to drive a section of a dual turbine on the turbo charger (conduit **16**-DC3.)
2) Directing conduit **16**-DC to empty into exhaust conduit **18** by way of conduit **16**-DC-**4** to help drive the single turbine-turbo charger.
3) Directing conduit **16**-DC to a turbine (T) geared to the engine crank shaft or drive shaft by way of conduit **16**-DC-**5**.
4) Directing conduit **16**-DC to the atmosphere by conduit **16**-DC-**6**.

A means of quickly building operating pressure is by closing optional shut-off valves **16***a*-E to **16***f*-E as the rotating crank shaft quickly builds pressure. Alternatively, the engine is quickly started by stored compressed air as is the case in some large engines.

Additional operating principles are:

1) Assume the volume of the cylinder divided by the volume of the combustion chamber is 20:1. (We will use these figures for simple calculations, but actually the combustion chamber is preferably made smaller, perhaps 40:1).
2) Therefore, the expansion ratio in this estimation will always be 20:1.
3) An air charge is received by cylinder **7** through intake valve **16**-B (1st stroke). Piston **22** reverses and begins compression (2nd stroke). Assume the compression ratio is 14:1 at point EO and the charge is pressed into valve **16**-C cooling system., FIG. **18**-D. There, valve **16**-C closes at point EC and valve **16**-D opens.
4) A pressure blow-down occurs between points EC and F, optionally aided by vacuum to make room for re-injection of charge after pressure builds.
5) Assume the pressure now in-cylinder at point F is negligible.
6) When intake valve **16**-A opens at F, as valve **16**-D closes, the cylinder above piston **22** at point F is quickly filled with air or air-fuel charge which has the density of a charge which is close to 14:1 compression ratio, but has little or no heat-of-compression.
7) This cooled, dense charge now in combustion chamber of cylinder **7** is compressed further with a low "effective" compression ratio (perhaps 2:1 to 5:1) in the reduced volume—"diminutive" combustion chamber where it can be compacted to a much denser state than that of conventional engines with, again, small amount of heat-of-compression.
8) At or near piston TDC, the air-fuel charge is ignited for the full expansion which for this basic assumption is a 20:1 expansion ratio.
9) The scavenging (4th) piston stroke completes one working cycle.
10) If the injected charge has a density of 12:1 to 14:1 compression ratio is cool and is further compressed by 6:1 compression ratio, the density of the charge is 12×6 for a density of 72:1 or 14×6 for a density equal to an 84:1 compression ratio with very small heat-of-compression.
11) Therefore, the denser charge is inherently more powerful and efficient than a normal engine's charge and having great turbulence, produces much lower amounts of polluting emissions.
12) Although the charge weight has been reduced, the greater density coupled with the extended expansion ratio provides improved efficiency that will offset the waste of energy required to compress that portion of the charge lost in the "blow-down" of pressure at point EC. In this new working cycle, there is a net gain in both power and efficiency.
13) Some of the energy lost in the cylinder blow-down process can be recovered by directing the expelled portion of charge to the turbo-charger 1 drive inlet, or to drive turbine T, as shown in FIG. **18**-C. If the fuel is pre-mixed with air, the charge expelled to point F_0 must be returned to the intake system as described herein.

Shown in FIG. **18**, FIG. **18**-B and FIG. **18**-C is a suggested engine control system, which also pertains to FIG. **18**-D. This control system consists of an engine control

module (ECM) **27**, two shutter valves **3** and **5**, two air bypass valves **4** and **6** and a scheme of controlling the pressure, temperature and density by controlling air bypass valves **4** and **6** and shutter valves **3** and **5**. A control example illustrates that air bypass valve **4** is partly closed to optionally re-circulate part of the compressed charge. Shutter valve **3** is slightly open, allowing part of the air to flow uncooled (hollow arrows) and some of the air cooled (solid arrows) to the manifolds **13** and **14**, all of which is preferably controlled by the ECM-**27** in order to provide an air charge at optimum density, temperature and pressure. The hollow arrow in conduit **120** shows how air bypass valve **4** can be partially opened to allow some of the air to bypass and return in order to finely adjust the pressure of the super-compressed air charge that is injected to adjust the charge density, temperature and perhaps a stoicheometric air fuel mixture. Alternatively, all of the super-compressed portion of the air charge can be directed through the intercoolers **10'**, **11** and **12** to the manifolds **13** and **14**.

Outlet valve **16**-C should be large to reduce fluid flow friction while open and intake valve **16**-A is optionally doubled in size or number. In one optional design, the cylinder **7** diameter may be smaller in respect to the piston **22** stroke length. This provides farther piston travel to allow a longer travel time between points A and E and to give more time for valve **16**-C to open and close. In addition, the smaller diameter cylinder allows more charging and burning time as piston **22** travels from F to G and returns from G to A, the latter producing an extended expansion ratio.

Alternatively, double burn (dwell) time is allowed by utilizing the cylinder-piston drive arrangement shown in FIG. **16** as described herein.

Results and advantages of the engine **100**$^{18\text{-}C}$ and FIG. **18**-D with the primary air charge being boosted in pressure.

Results

1) Low peak temperatures and pressures
2) Homogeneous combustion charge
3) A denser, cooler charge
4) Greater efficiency
5) Greater engine durability

Advantages

1) Lower polluting emissions
2) Greater power per unit of charge
3) Greater torque
4) Increased vehicle range
5) Multi-fuel capabilities
6) Longer engine life

Homogeneous Charge Compression Ignition (HCCI) Basic Operating Principals

The basic HCCI operation, that of controlling charge temperatures and timely ignition, is similar for both 4-stroke engines (FIG. **1** to **7** and FIG. **18**, **18**-B and FIG. **18**-C) and for 2-stroke engines (FIG. **8**, **9** and **10**). In the 2-stroke engine, the primary air charge used generally comes through ports **11** in the wall of cylinder **12**. The valving is by ports **11** being closed and opened by piston **22**. In 4-stroke engines, the primary air charge comes from intake valve **16**-B. In both 2-stroke and 4-stroke engines, the supplementary air charge generally comes through intake valve **16**-A.

For engines designed for HCCI operations using Methods A through G and engine Operational Designs 1 through 13, as depicted and described herein, for the present invention, are recommended.

Operational Designs 1 through 6 pertain particularly to 4-stroke engines of FIG. **1**, FIG. **2**-B, FIG. **2**-C, FIG. **3** to FIG. **5** and FIG. **7**. Engine of FIG. **2**-D utilizes Operational Design 7 in either 4-stroke or 2-stroke engines. Operational Designs 8 through 10 pertain particularly to 2-stroke engines of FIG. **8** through FIG. **10**. Operational Designs 11, 12 and 13 pertain particularly to 4-stroke engines of FIG. **18**, FIG. **18**-B and **18**-C.

Description of subsequent Methods, A through G of HCCI operation will be limited almost entirely to the methods of control of charge density, temperatures and the means and timing of charge ignition, with reliance on the instructions for operating the engine as being explicit in the instructions and suggestions for the HCCI methods and also with reliance on references to the various engine designs and their corresponding Engine Operational Designs.

The spark ignition operation of any of the Operational Designs requires similar control of charge density, temperature and ignition timing with much less stringent control of temperatures, the most important being that the temperature of the fuel-air mix must be lower than auto-ignition until the point of ignition, with ignition generally occurring a few degrees before piston TDC. The chief advantage of this system of spark ignition being that low auto-ignition fuels like diesel oils can selectively be compressed to a much denser and more powerful charge, although already mixed with air, than that of the Diesel cycle engine, while also eliminating pre-mixed burning. The latter is the cause of diesel smoke and and smaller particulates. In addition, this system of keeping the combustion and peak temperatures low greatly reduces or eliminates NO_x and some other polluting emissions.

HCCI and Spark Ignition Methods A–G

Referring now to FIG. **19**, FIG. **19**-B and FIG. **19**-C, there is shown schematic transverse sectional views of preparation or pre-combustion chambers **38'** and combustion chamber **38** and **38**-B with some variance of shapes in the different figures with associated inlet conduits, injector pump, ducts, jackets and valving for fluids (gaseous or liquid) and electrical elements, all pertaining to producing and maintaining temperature desired for gaseous or liquid fuel operation of the engines of this invention, 2-stroke, 4-stroke, or rotary, or for any other internal combustion engine for providing spark or compression ignition, modified HCCI or true HCCI in a timely fashion, and for which methods are described herein. All components named will be identified and described in regard to the method of ignition to which they pertain.

The cool, dense air-fuel charge, either premixed or instantaneously homogenized, of the engine of this invention lends itself readily to conventional spark or compression ignition. The charge can also be ignited by modified HCCI or true HCCI systems as described herein. Since ignition by spark or compression is well known in the art, the following describes only the latter two systems. HCCI is accomplished in this manner: FIG. **19** illustrates primary air at atmospheric pressure, or pressure boosted and cooled, entering cylinder **7** through channel **18'** on the intake (1st) stroke through intake valve **16**-B with a second cool or optionally chilled high pressure air charge entering later during the compression stroke through inlet **8'** and intake valve **16**-A where the two charges mix above piston **22**. Temperature and pressure sensors **21'** and **21"** and optional pressures sensors therein signal ECM-**27** to adjust flows to the proper order to produce an air-fuel mixture which has proper density and is at a temperature at near piston TDC, preferably at or just below that which would cause the charge to auto-ignite at piston **22** TDC, depending upon the particular method of charge ignition selected.

Engine Control Module ECM-27 of FIG. 2 or FIG. 2-C, along with compressor(s) 2 and optionally 1 and coolers 10, 10' and/or 11 and 12 with variable valves 3, 4, 5 and 6 on conduits as shown, along with pressure, temperature, oxygen, crank angle, and other sensors, provide a system, in conjunction with heat-of-compression, for controlling the charge pressure, density and temperatures, each separately, within the cylinder at the point and time desired for ignition. Intake valves 16-B and 16-A which can be hydraulically or electrically operated, as shown in FIG. 19, FIG. 19-B, FIG. 19-C and FIG. 19-D, managed by ECM-27 with appropriate activators, can also control the time and quantity of high and low pressure charge admitted to cylinders in order to aid in turbulence, density, pressure and temperature management. Alternatively, control of temperatures in the combustion chamber may be enhanced by the use of compression-expansion chilling of air and air-fuel charges, as depicted and described in and for FIG. 2-B, FIG. 2-C, FIG. 2D, FIG. 11-B, FIG. 18-B and FIG. 18-C. This system directs compressed air to expansion valve 10' pressure-drop-distributor 11, conduit or evaporator tube 27'*a*–27*f*, leading to inlet ports 18' and 8' and valves 16-B or 16-A of engine of FIG. 19, FIG. 19-B, FIG. 19-C and FIG. 19-D, as seen in FIG. 2-C and FIG. 2-B, respectively. Alternatively, the cool or chilled air may be directed to a chamber cooler system, consisting of either conduit 36-B, valve 40-B or conduit 42-B, both of FIG. 19-B, FIG. 19-C and FIG. 19-D, which conduits form cooling and heating jackets for combustion chamber 38', 38 and 38-B.

The pressure and density of the contents of cylinder 7 is adjusted to provide the torque and power required of the engine for the present duty cycle. A computer in the ECM-27 calculates the values received preferably from at least two sensors for each combustion chamber for monitoring temperature (21') and pressure (21"). It then computes the mean values in a single cylinder or for all cylinders of an engine and signals controls in the ECM to arrange the opening and closing of shutter and by-pass valves to adjust the density and temperature desired in each. In either engine of FIGS. 2-B, 2-C, 11-B, 18, 18-B, 18-C, 18-D, 19, 19-B, 19-C and 19-D, the optionally variable expansion valve 10' (see description of FIGS. 2-B, 2-C, FIGS. 11-B, 18-B, 18-C, 19-B and 19-C) and with control valves 3, 4, 5 and 6 and compressor speed all controlled by ECM-27, produces and maintains, in conjunction with heat-of-compression, the desired charge density and temperature at piston near or at TDC. Other sensors known and used in the art can monitor pressure oxygen, crank angle, etc. values and signal ECM-27 to adjust controls for best engine performance, with the ignition point preferably being 10–15 degrees before or at piston TDC. Closer temperature control may be achieved by utilizing compressed heated gases from conduit 36, FIG. 1-C or from conduit 118' of FIG. 2, with temperatures adjusted as described, being ducted through conduits 40, 40-B or 36 or 36-B in chambers 38' 38 or 38-B of FIGS. 19, 19-B, 19-C and 19-D. Also utilizing the cooling or expansion chilling or even heating of cylinder walls as described and depicted for FIG. 6 and FIG. 5 by use of expansion valves 4', FIG. 5 as well as expansion valve 10' and associated apparatus in FIGS. 2-B, 2-C, 11-B, 18-B, 18-C, 19-B, 19-C and 19-D. all controlled by ECM-27 and activators, all in conjunction with heat-of-compression, can assist in fine control of temperature at piston TDC. Heating elements 37, 39' in FIGS. 19, 19-B, 19-C and 19-D, also controlled by ECM-27, are used to regulate charge temperature at piston TDC.

In FIGS. 19-B, 19-C and 19-D, conduits 36-B and 41-B with their corresponding optional valves, 40-B and 42-B are alternatively, both or singularly, for injecting ignition enhancing pilot fluids (in which case conduits 36-B and/or 41-B open and end in combustion chamber 38-B or in preparation chamber 38) or one or both are conduits and jackets to receive and utilize fluids to assist in adjusting charge temperatures to facilitate spark, HCCI or modified HCCI engine operation.

Preparation

(1) The fuel is preferably mixed with high air content by carburation of one or both incoming air streams (supercharging secondary air stream for 2-stroke designs), as described herein, for the engines of the present invention (Operational Designs 1 through 13) and for Otto and Diesel Cycle engines.
(2) It can also have a well mixed air-fuel charge by central-body injection (similar to throttle-body injection) of fuel.
(3) The fuel may be injected into the air stream(s) before entering the cylinder 7.
(4) The fuel may be injected through the valve ports 18' and/or 8' with or without accompanying air.
(5) The fuel may be injected directly into the cylinder, where the air is already present with the tremendous turbulence created by the injection of the high pressure secondary air charge into the cylinder, causing instantaneous homogenization of the charge. The supplemental, secondary air charge injection systems of FIGS. 3, 4, 7, 9, 10, 18, 18-B and 18-C, which can be supplied alternatively through an expansion chiller valve 10' and accompanying chilling apparatus, can be utilized to cool and sweep out the space between piston and cylinder wall, especially above the top piston ring at piston TDC or perhaps all of piston ring crevices to reduce unburned hydrocarbons (HC) and prevent formation of formaldehyde emissions. A gentle blast of compressed air, alternatively through one or multiple ports 17-B of the Figures having such ports, could be used to prevent removing the oil-film from cylinder walls.

HCCI—Method A, Modified HCCI Operational Design 14, FIG. 19, FIG. 19-B Heated Pre-Combustion Chamber

Intake valve 16-B takes in a primary charge, piston 22 reverses direction and begins the compression stroke. Sometime during the compression (2nd) stroke a supercharging fuel-air charge is injected by valve 16-A and compression continues. Now, with the air-fuel charge homogenized at the proper density and the temperature being near, but below auto ignition near piston TDC, the ignition system works in this manner: At near piston TDC, the charge is ignited by spark or for HCCI. Pre-combustion or preparation chamber 38' has an optional blocking valve 21 (FIG. 19 and FIG. 19-B) for HCCI, which separates chamber 38' from combustion chamber 38 and with piston 22 at or near TDC, blocking valve quickly opens. The air-fuel mix in combustion chamber 38 is instantly compressed into empty pre-combustion chamber 38', heating elements 37 and/or 39 immediately raise the temperature of the propulsion-fuel mixture above the auto-ignition temperature of the fuel-air mixture. It almost instantly combusts, expanding into combustion chamber 38, further mixing and catalyzing combustion of the entire fuel-air charge. This causes piston 22 (or rotor FIGS. 24–34) to be pressed into the power (3rd) stroke which is followed by the scavenging (4th) piston stroke.

For spark ignition, item 37 is a sparking plug and preparation chamber 38' and valve 21 are eliminated in all FIGS.

19–19-C and Methods 1–7. In spark ignition, the fuel-air charge is simply kept somewhere below auto-ignition temperature, making the system also feasible for diesel fuel since the charge can be kept below that which would cause auto-ignition (below 8:1 compression ratio temperature).

In Operational Design 1 to Design 6, as described for 4-stroke engines of FIGS. 1 through 7 engines, and for 2-stroke engines of FIG. 8 through FIG. 10, the four principal Operational Designs are here reiterated briefly:

Design 1: Intake valving and combustion chamber are as normal for a normal compression ratio with a normal expansion ratio.

Design 2: Intake valving is as normal, but the combustion chamber is enlarged for a subnormal compression ratio, but still with an expansion ratio equal to the compression ratio.

Design 3: The intake or exhaust valve closes early or late to capture a small air-fuel charge for a low "effective" compression ratio and an extended expansion ratio.

Design 4: The exhaust valve stays open during the compression stroke to near piston TDC, expelling most of the fresh primary charge from cylinder 7 or 22 (FIGS. 2–10), which is to cool both chambers 38' and/or 38 and to produce an "effective" compression ratio of perhaps 2:1 or less with an extended expansion ratio. At near piston TDC, the entire working charge is injected. This produces an "effective" ratio of 2:1 to zero.

In all cases, a supplementary cool, dense air charge is injected, preferably late, during the compression (2nd) stroke. At piston TDC, the charge is ignited for the power (3rd) stroke, followed by the scavenging (4th) stroke to complete a power cycle.

Method A, Detailed Operation

Piston 22 has just completed the scavenging (4th) stroke and is at TDC. Intake valve 16-B opens as piston 22 begins the intake (1st) stroke, taking in our atmospheric or pressure boosted and cooled air or air-fuel charge. Piston 22 reverses and with insulated valve 21 closed to temporarily prevent flammable air-fuel propulsion charge entering pre-combustion chamber 38' prematurely, piston 22 begins and continues the compression (2nd) stroke toward TDC. (The primary air-fuel charge would optionally produce a sub-standard or sub-normal compression ratio charge for low heat-of-compression for that portion of the charge).

During the compression (2nd) stroke a supplemental, supercharging, highly compressed, dense, temperature-adjusted air charge is injected into cylinder 7 above piston 22. The supplemental, secondary air charge can be added at any point after the port intake valve 16-B closes on the intake (1st) stroke and can be as late as during charge combustion. The supplemental, secondary charge can be injected at such point in the compression stroke that it will also have a very low compression ratio in all Operational Designs, again for very low heat-of-compression. In addition, the supplemental, secondary air charge can be either a major or minor portion of the entire air-fuel charge versus the primary charge which has the same capabilities. (Sensors in chamber 38' have signaled ECM-27 information which it uses to use control valves 3, 4, 5 and 6 and optionally valve 10', including the heat-of-compression to adjust charge temperatures near piston TDC to be just below auto-ignition temperature. Compression continues until piston is very near TDC. At that point, blocking valve 21 opens quickly and receives the compressed fuel-air propulsion charge being compressed into chamber 38'. Heating elements 37 and/or 39 plus the heat-of-compression raise the temperature of the fuel-air mix above the auto-ignition of the fuel, causing the charge to begin oxidation. (If the temperature in pre-combustion can be controlled sufficiently, blocking valve 21 may be eliminated.) The hot swirling charge expands past valve 21 into combustion chamber 38, catalyzing the rapid oxidation of the entire fuel-air charge. The expanding charge depresses piston 22, or rotor 2 or 2-B, into the power (3rd) stroke. At BDC, piston 22 reverses and scavenges the cylinder with (4th) stroke in preparation for another working cycle. This completes one power cycle of the engine.

The preferred method of operation is for the primary air charge to be boosted in pressure. All Operational Designs, except Design 1 and Design 2, have selectively extended expansion ratios, with low effective compression ratios. When operating in HCCI methods, valve 21, opening to preparation chamber 38', may stay open through the piston power (3rd) stroke, the exhaust (4th) stroke and the piston (1st) stroke, closing at the start of the start of the compression (2nd) stroke. Should proper HCCI temperatures be controllable or spark ignition be employed, valve 21 may be eliminated.

Note that in Operational Design 4, the cool primary charge is expelled through valve 16-C (not shown) which can open into chamber 38 or 38' or through exhaust valve 17 and is used only to cool chambers 38 and 38' after which the expelled charge is returned, if fuel is present, to suction conduit 110 of compressor 2 or to suction port 8' of FIG. 2. If Operational Design 4, as described for engine of FIG. 2, FIG. 2-B, FIG. 2-C, FIG. 8-FIG. 10 or FIGS. 24–32, is utilized, the primary air charge may be free of fuel since that air is used only for cooling cylinder 7 or 12, preparation chamber 38' and/or combustion chamber 38 or 38-B, the latter of FIG. 19-C or FIG. 19-D. As the cooling charge without fuel is pressed through outlet valve 16-C (not shown), or through valve 40 or 42 of FIG. 19-C, it is expelled into the engine exhaust or into the atmosphere.

HCCI—Method B, Operational Design 15 Hot, Non-Flamable Gas Injection

An initial air-fuel propulsion charge is prepared and drawn into cylinder 7 on the intake (1st) stroke and is compressed by piston 22 in the second stroke after piston turnaround. The temperature of a supplemental supercharging air charge plus heat-of-compression has been adjusted to produce at piston TDC somewhat less than auto-ignition temperature for (a) spark ignition and only slightly less than auto-ignition temperature at near TDC of piston 22 for (b) modified HCCI operation, as in Method A. At any point found to be most appropriate during the compression (2nd) stroke, intake valve 16-A opens and closes quickly, injecting the supplemental temperature-adjusted air-fuel charge. Inlet valve 40 restrains hot compressed gas (from conduit 36 of FIG. 1-C and/or from conduit 118' of FIG. 2 through FIG. 2-D, FIGS. 11, 11-B, FIGS. 17, 18, 18-B and 18-C) to insulated conduit 36, of FIGS. 19-B, 19-C or 19-D, which leads to preparation chamber 38' or combustion chamber 38 or 38-B. Heating elements 37 and 39 within preparation chamber 38' or 38-B can optionally be present and heated in order to help manage charge temperature with heat and other sensors within chamber 38' or 38-B and controlled by ECM-27. The compression (2nd) stoke of piston 22 nears completion and the propulsion air-fuel charge is now compressed above piston 22 and fills combustion chamber 38 and/or preparation chamber 38'.

Near TDC of piston 22, optional valve 40 or 40-B, if present, opens and closes quickly. The charge of hot, highly

compressed gas from conduit **36** or **36**-B, which can be part of (a) the engines secondary highly compressed air charge from conduit **109**, FIG. **2**, with part or all of the heat of compression retained, or the charge may be further heated by heater **116'** in FIGS. **2**, **2**-B, **2**-C, **11**, **11**-B, **18**, **18**-B and **18**-C or (b) recycled hot exhaust gas, or a mixture thereof from conduit **203***i* of FIG. **1**-C or other nonflammable gases. This hot, compressed gas, which has been optionally superheated by heating elements **37** and/or **39**, perhaps assisted by compressor **2'** and by heater **108** in FIG. **1**-C, blasts into the preparation chamber **38'**, mixing and instantly catalyzing the ignition by raising the temperature of the swirling charge above the auto-ignition temperature of the propulsion fuel. The ignited charge now expands into combustion chamber **38** where the homogenized air-fuel charge is still mixing from the injection by valve **16**-A. With the ignited charge being expanded from chamber **38'** and mixed with the rest of the charge in combustion chamber **38**, combustion will be broadly spontaneous and more complete with very low unburned hydrocarbons (HC) and low CO, CO_2, NO_X and particulates. As mentioned earlier, part of the high pressure supplemental, secondary air charge, sans fuel, may be directed to conduit **36** FIG. **19**, FIG. **19**-B, FIG. **19**-C and FIG. **19**-D from conduit **109** FIG. **2** to FIG. **2**-D by way of conduit **111'** to compressor **114'** and heater/cooler **116'** (both optional), and/or, wholly or partly, through bypass systems **112'** and **113'**, **115'** and **117'**. It is then directed to conduit **118'** which leads to charge distributor (similar to **11'** of FIG. **11**-B) where it divides and conveys part or all of the hot air charge, or combined with hot effluent from conduit **203***i*, FIG. **1**-C, to conduit **36**, FIG. **19** or **36**-B of FIG. **19**-B or FIG. **19**-C of each of the engines cylinders, in order to catalyze ignition of the propulsion charge near TDC.

Alternatively, for non-flammable gas, valve **40** on conduit **36** of FIG. **13**, FIG. **19**, FIG. **19**-B and FIG. **19**-C, which can be close to pre-combustion chamber **38'**, can be kept closed to restrain the hot gas until piston **22** nears TDC in the compression stroke, preferably at 10–15 degrees before piston TDC. At that point, valve **40** is opened to inject a small amount of the hot gas, which originates from conduit **203***i*, conduit **109**, FIG. **2**, FIG. **2**-B or FIG. **2**-C, through conduits **111'** and optional compressor **114'** and heater **116'** and conduit **118'** or from any other source, to enter and mix with the small amount of air-fuel within the pre-combustion chamber **38'**. The hot gas instantly raises the temperature of the air-fuel mix in the pre-combustion chamber **38'** catalyzing the ignition whereby the burning mixture expands into the combustion chamber **38**, catalyzing and further oxidizing the entire charge.

Alternatively, the gases can originate from conduit **203***i*, as in FIG. **1**-C from exhaust, from a mixture of hot exhaust and air or any other appropriate gas. The gas is compressed by compressor **2'**, if necessary, or any other type compressor. If the gas is not hot enough, it is heated by passing the gas through heater **108** (**108** can optionally be a cooler if charge is too hot) or bypassed, wholly or in part, through bypass system **203***h'* and **203***h*, FIG. **1**-C. The hot gases can be mixed with engine fuel within pre-combustion chamber **38'**, ignited and expanded into combustion chamber **38** as described in number **3** above.

Direct Combustion Chamber Ignition

Alternatively, pre-combustion chamber **38'** is eliminated in this system and for HCCI. Hot gases are now directed through insulated conduit **203***i*, FIG. **1**-C (or through conduit **118'**, FIGS. **2**-**2**-D) which is fitted with an effluent distributor (not shown), of which a distributor tube goes directly to, and can intrude into combustion chamber **38** or **38**-B, FIGS. **19**, **19**-B, **19**-C and **19**-D of each power cylinder of the engine. A valve **40** on conduit **36** opens and closes quickly at perhaps 10–15 degrees, before piston TDC, to inject the compressed hot gases directly into the turbulent air-fuel charge in combustion chamber **38**. As stated, these hot gases can be a portion of the engines high-pressure supplemental, secondary air charge (without fuel) with the heat-of-compression retained and heated or cooled, if needed, or they can be re-circulated hot or heated exhaust gases, heated air or a mixture thereof from conduit **36**, FIG. **19**, FIG. **19**-B and FIG. **19**-C. When the hot gases enter combustion chamber **38**, they disperse throughout the charge, raising the temperature of the fuel-air charge above the auto-ignition temperature of the charge, catalyzing the ignition of the charge which then expands driving the piston. Any compressed hot, flammable or non-flammable gas would be a good catalyst for low auto-ignition fuels, such as gasoline or diesel fuel. If diesel propulsion fuel were used, the New Cycle Engines of this invention would compact the air-fuel charge to a far greater density than would a current diesel engine with the air-fuel charge temperature being lower than the auto-ignition temperature of diesel oils-air mixture. (Diesel oil-air mix would auto-ignite at a compression ratio of about 8:1 in any normal diesel or current technology HCCI engine, reducing power and efficiency. As already stated, compressed natural gas, with or without air, should be a good pilot fuel for diesel oil fuels, but preferably without being mixed with air.

Optionally, the hot gases may be injected into either preparation chamber **38'** or combustion chamber **38** from two or more injection lines. For example, conduit **41**-B of FIG. **19**-B and valve **42**-B and other entrance systems may be utilized to surround the propulsion fuel to initiate oxidation, especially useful in FIG. **19**-B, FIG. **19**-C and FIG. **19**-D arrangement.

(a) In all options, ignition occurs and the power (3rd) stroke now takes place.

(b) At the end of the power stroke, piston **22** rises in the scavenging (4th) stroke to scavenge the cylinder **7**.

(c) Another cycle begins.

(d) In all options, the engine's fuel-air charge is near auto-ignition at near piston TDC before ignition is catalyzed. For optional spark ignition, low-auto-ignition fuels need only to be below auto-ignition temperatures before spark ignition.

The described method for producing extremely dense charge while suppressing temperature to below auto-ignition temperatures allows spark ignition for diesel oils without smoke and other pollutants. This is because smoke in Diesel engines is caused by pre-mixed burning and in this system the air and fuel are a homogeneous mixture. The fuel-air mixture is ignited by (a) spark plug **37** in pre-combustion chamber **38'** as in FIG. **19**, FIG. **19**-B and FIG. **19**-C or (b) the plugs can be used with the electrodes exposed directly to the combustion chamber **38** or **38**-B as in conventional, spark ignited engines and is shown if FIG. **19**, FIG. **19**-B, FIG. **19**-C and FIG. **19**-D. In each instance, spark plugs are optional and for an emergency backup system except where spark ignition is more desirable.

A good system of supplying hot gases for catalyzing ignition in any of the engines of this invention is depicted in FIG. **1**-C. Various proportioning valves operated and controlled by ECM-**27** remain closed or open, fully or partly, according to desired results, to take either fresh air from air intake **9** or re-circulated exhaust gas from exhaust conduit **18** or any percentage (0 to 100 percent) ad infinitum of each

for conveying to conduit **36** or **36**-B of pre-combustion chamber **38'** or combustion chamber **38** respectively, for catalyzing charge ignition. The ensuing mix or pure gas is taken through conduits **203***d* and **203***e* and passed through proportioning valve **203***f* to pass, wholly or partly, through compressor **2'** or, wholly or partly, through bypass conduit **203***h'* to proportioning valve **203***g'* and caused to pass wholly or partly through heater/cooler **108** or pass, wholly or partly, through bypass conduit **203***h*, both routes leading to conduit **203***i* which in turn leads to effluent distributor and distributor tubes (not shown) leading to conduit **36** or **36**-B of each of the cylinders of the engine design being selected. Other suitable gases, such as natural gas (perhaps CNG) can be directed into conduit **111** of FIG. **2** or conduits **203***d* and **203***e*, FIG. 1-C either optionally or directing to conduit **36** or **36**-B of FIG. **19** and FIG. **19**-B respectively. The various valves are controlled by ECM-**27** and are adjusted to provide the gas with the concentration and temperature desired for proper ignition catalyzation, the various conditions of which are related to ECM by proper sensors throughout the system.

Proper sensors in each engine cylinder inform ECM-**27** of the conditions in individual cylinders and ECM-**27** makes adjustments, such as temperatures and crank angles, for timely ignition in each.

Further instruction for engine operation for HCCI Method B is found under HCCI Method A with references to the advantages of the various engine designs. The HCCI ignition system only has been described above. The engine working cycle is described in HCCI Method A, utilizing any of Operational Designs 1 through 13.

HCCI operation of the engines of this invention optionally produces an extended expansion ratio in Operational Design 3 through Operational Design 13 for improved fuel economy and low polluting emissions with great power. Because of the low temperature working cycle and homogenized air-fuel charge, all thirteen Operational Designs produce extremely low polluting emissions.

The advantages of this new engine cycle are:

Higher efficiency.

Greater power and torque.

Longer engine life.

Multi-fuel capabilities.

Greater reliability.

Method C—Modified HCCI, Operational Design 16 Flammable Fluid (Gas or Liquid) Pilot Fuel

The air intake (1st) stroke, the compression (2nd) stroke has occurred and the supplementary air-fuel charge has been injected. With the air-fuel propulsion charge homogenized and the temperature of the mix when compressed at near piston TDC being adjusted to near auto-ignition temperature, with combustion chamber **38**, **38**-B and preparation chamber **38'** or **38'**B filled with propulsion fuel above piston **22**, the system works in this manner: The fuel air charge is ignited by (a) spark as in conventional engines and (b) for HCCI operation. Conduit **41** with fuel injector **42** (both in phantom), receives and contains pilot fuel or air-fuel mix, perhaps from a common fuel-rail, which can be any liquid or flammable gaseous product, such as CNG-air mix, dimethyl ether-air mix or preferably CNG or pilot fuel or dimethyl ether alone. All would be appropriate as pilot fuel for diesel-air propulsion fuel, as all have a higher auto-ignition temperature than does diesel oil-air mix. Both natural gas and dimethyl ether can be heated to an even higher temperature, if injected devoid of air.

At near completion of compression (2nd) stroke and near TDC of piston (preferably 10–15 degrees before), a small amount of heated pilot fuel in line **41**, with temperature adjusted to above auto-ignition temperature of the propulsion fuel-air mix, but below auto-ignition of the pilot fuel, is injected by fuel injection pump **42** into preparation chamber **38'**, the fuel injected having been further heated, if needed, by heater **37** and/or **39'** or by a heater of any type. (such as **108** in FIG. **1**-C and **116'** in FIGS. **2** through **2**-D and FIGS. **17**, **18**, **18**-B and **18**-C). This higher temperature pilot fuel then ignites the small quantity of propulsion fuel by raising its temperature in chamber **38'** which then, in turn, ignites the pilot fuel and together expands into combustion chamber **38**, raising the temperature of the air-fuel propulsion mix, instantly catalyzing the reaction by quickly raising the temperature to above auto-ignition level. In the compact combustion chamber, with the fuel-air premixed (homogenized) and with the turbulence of the new engine system, the combustion will be far more complete than in a compression ignited (CI) engine where much of the fuel burns prior to mixing. The expanding charge drives piston **22** in the power (3rd) stroke which is followed by the scavenging (4th) stroke of piston **22**.

An ideal hot flammable gas for igniting low ignition fuels would appear to be natural gas, sans air, which can be heated to temperatures higher than the auto-ignition temperature of pure gasoline or diesel oils or other low auto-ignition fuels. When injected into gasoline or diesel oil and air mixtures, the higher temperature natural gas will ignite the lower auto-igniting gasoline or diesel oil and air mixture, which in turn will ignite the natural gas pilot fuel, supplying any oxygen needed for burning the pilot fuel. The pilot fuel can always be heated to a higher temperature if it is not mixed with air before injecting into propulsion fuel. (In this working cycle, the temperature of the propulsion fuel-air mixture in the combustion chamber at TDC will be lower than its auto-ignition temperature at the time of the hot pilot fuel injection.)

If the pilot fuel is a flammable hot gas, it originates from a storage tank or supply pipe line, item **1** and **1***a*, FIGS. **20** or from conduit **43** of FIG. **21**. From there, it proceeds as suggested in method B for non-flammable gas. The flammable gas, which is hotter than the propulsion mix, catalyzes the ignition of the propulsion gas which, in turn, catalyzes ignition of the pilot gas which has a higher auto-ignition temperature.

Direct Combustion Chamber Ignition

Alternatively, with piston **22** near TDC, with preparation chamber eliminated, the charge is ignited by spark or alternatively, conduit **41** is extended directly into and can intrude fully and directly into combustion chamber **38**. Then at the proper moment, a charge of the pure pilot fuel or air-fuel mix in line **41** is injected optionally by injector **42** into the combustion chamber **38** and mixed with the air-fuel propulsion mix within the chamber **38**. Ignition is catalyzed by temperature increase by the higher temperature of the higher auto-ignition temperature pilot fuel, catalyzing ignition of the lower auto-ignition temperature propulsion fuel, (pilot fuel could be dimethyl ether or natural gas (CNG) for diesel or gasoline fueled engines), whereupon the propulsion fuel ignites the pilot fuel and this combusting charge expands to drive piston **22** in the power stroke. The scavenging stroke then occurs, completing a power cycle.

Alternatively, or in addition, for either pre-combustion chamber **38'** or for combustion chamber **38**, **38**-B injection systems other than conduit **41** and injector pump **42** are employed. For example, conduit **36**, **36**-B and injector **40** or

40-B are also used to inject the pilot fuel from two or more systems, especially important for FIG. 19-B and FIG. 19-C systems.

In the engine of this invention, when diesel fuel is used, the density of the air-fuel charge can reach and even far exceed that which is obtainable in any Diesel Cycle engine, while maintaining a temperature before combustion, lower than the auto-ignition temperature of a diesel oil-air mixture which is produced by about an 8:1 compression ratio, thus making practical spark ignition, modified HCCI or true HCCI.

Further instruction for engine operation for HCCI Method C is found under HCCI Method A with references to the advantages of the various engine designs. The HCCI ignition system only has been described above. The engine working cycle is described below and in HCCI Method, A. HCCI Method C operates in any of the thirteen Operational Designs of the engine of this invention.

HCCI operation of the engine of FIG. 1 to FIG. 18-D operates selectively with an extended expansion ratio (with the exception of Operational Designs 1 and 2). All Operational Designs provide:

Higher efficiency.

Greater power and torque.

Longer engine life (due to lower RPM allowed by higher torque).

Multi-fuel capabilities.

Greater reliability.

All Methods after ignition of charge the power stroke take place in 4-stroke or 2-stroke engines, followed by scavenging process.

Method D HCCI, Operational Design 17 Pilot Fuels with Low Auto-Ignition Temperature

The primary propulsion charge is taken into cylinder according to any of the Operating Designs 1 through 13. The compression stroke continues or takes place with the supplementary supercharging charge being injected and with the propulsion air-fuel homogenized and the temperature of the fuel-air mix at piston TDC adjusted to near auto-ignition, but the air-fuel propulsion charge is at a higher temperature than that of the auto-ignition temperature of the pilot fuel.

The propulsion air-fuel charge is now compressed stroke in cylinder 7 by piston 22 with preparation chamber 38' and combustion chamber 38 containing the entire propulsion charge above piston 22, at near auto-ignition temperature, at near TDC. The fuel-air charge is ignited by conventional spark plug or by HCCI for HCCI operation. Conduit 41, with fuel injector pump 42, (in phantom), FIG. 19 through FIG. 19-B, receives and contains pilot fuel, perhaps from a common fuel-rail. The pilot-fuel is an air-fuel mixture where the pilot fuel is one that has a lower auto-ignition temperature than that of the auto-ignition temperature of the fuel or air-fuel mix which powers the engine. Diesel fuel or diesel-air mix could be an appropriate pilot fuel for gasoline-air, dimethyl ether-air, natural gas-air or some of the alcohols as propulsion fuel operation.

The small amount of the engine's propulsion fuel mix in combustion chamber 38, is at a temperature less than its own auto-ignition temperature, but higher than the auto-ignition temperature of the pilot fuel, and is now pressed into pre-combustion chamber 38' near piston TDC. Simultaneously, a small amount of pilot fuel or pilot fuel-air mix in line 41 is injected by fuel injection pump 42, FIG. 19, into pre-combustion chamber 38'. (Alternatively, the pilot fuel or pilot air-fuel mix can be injected through conduit 36 with valve 40, FIG. 19, controlling the injection.) The propulsion fuel-air mixture, now in pre-combustion chamber 38', which is hotter than the auto-ignition temperature of the pilot fuel, which is alternatively sans oxygen or pilot fuel-air mix, catalyzes the ignition of the pilot fuel which then causes oxidation of the engine's propulsion fuel and all expands into combustion chamber 38 where it raises the temperature of the entire air-fuel propulsion mix, broadly catalyzing the reaction, and causes oxidation of the entire charge by quickly raising the temperature of the air-fuel mix propulsion in combustion chamber 38. Piston 22 is pressed into the power stroke. (In the compact combustion chamber with the fuel air premixed (homogenized) and with the turbulence of the new engine system, the combustion will be far more complete than in a compression ignited (CI) engine).

Direct Combustion Chamber Combustion

Again, the charge can be ignited by spark or alternatively, ignition can be catalyzed in the following manner: The pre-combustion chamber is eliminated, fuel pump injector 42 has an inlet conduit 41, FIG. 19, which is directly connected with combustion chamber 38 (not shown) and may intrude into chamber 38. After completion of the compression stroke and near TDC, with the entire propulsion charge being above piston 22 in combustion chamber 38, a small amount of pilot low-self-ignition-point fuel or air-fuel mix, which itself is at a temperature lower than auto-ignition, is injected by fuel pump 42 directly into the combustion chamber 38 of cylinder 7. The temperature of the propulsion air-fuel mix in combustion chamber 38, being higher than that which will cause the pilot or pilot air-fuel to auto-ignite, raises the temperature of the pilot fuel injected and catalyzes the ignition of the pilot fuel which in turn catalyzes the oxidation of the entire air-fuel charge in combustion chamber 38. The power stroke then takes place.

Detailed Methods

More detailed operating methods are discussed in method A.

True HCCI Method E, Operational Design 18 Universal Spontaneous Combustion

Referring now to FIG. 19-B, cylinder 7 is fitted with a combustion chamber 38 or, in addition, a pre-combustion chamber 38'. The fuel-air charge can be ignited by spark or by HCCI. For HCCI, either or both chambers have sensors to detect conditions in the chamber, e.g., temperature sensor 21', density sensor 21", and any other sensors needed to monitor other conditions such as oxygen levels, crank angle etc. These sensors relay messages to ECM-27, FIGS. 1 through FIG. 10, FIGS. 18, 18-B and 18-C which contains a computer to send messages to activators to operate various controls. These controls then adjust fluid flows and valve happenings and to either increase or decrease electrical energy, charge air density, in regard to the duty cycle of the engine, and to adjust the valving 3, 4, 5 and 6, along with heat-of-compression and to control the charge temperature near piston (TDC). The latter will be just above the temperature to cause the air-fuel charge to self ignite at TDC. The controls and methods are described in the descriptions for FIG. 19, FIG. 19-B, FIG. 19-C, FIG. 19-D, FIG. 1 and FIG. 2.

Optionally, each cylinder can have separate controls if needed. For multi-cylinder engines, as described under FIG.

19, FIG. 19-B and FIG. 19-C descriptions, each combustion chamber 38 or 38-B or pre-combustion chamber 38' can have at least two temperature sensors 21' and two pressure or density sensors 21". The computer of ECM-27 receives the message from each cylinder, finds the mean value of each, sums up the values individually or collectively, and calculates the mean values. ECM-27 then instructs the various heat and valving controls to adjust the density and temperature (in conjunction with the cylinders heat-of-compression) of the engine air-fuel charge in each cylinder near piston TDC to produce a proper density charge and temperature, which would be at auto-ignition temperature at piston TDC for the air-fuel propulsion mixture fueling the engine. The charge should ignite preferably at 10–15 degrees before or at TDC as detected by crank angle sensor. The arrangement, described for FIG. 16, provides double the "burn" time at piston TDC for many advantages in any engine.

In using the pre-combustion chamber 38', the temperature sensors 21' in combustion chamber 38, sense the temperature and relay the message to various controls to adjust conditions, including electrical heating or fluids in cooling ducts, to produce a temperature at that of auto-ignition, preferably at 10–15 degrees before or at piston TDC. Sensors 21' in pre-combustion chamber 38' relay a message to ECM-27 to adjust the controls of heating elements 37 and 39 in FIG. 19-B and/or to adjust cooling fluid flows, FIGS. 19-B, 19-C and 19-D to the proper temperature for catalyzing auto-ignition of the air-fuel charge in the pre-combustion chamber at that point. This will start the engine running and maintain smooth operation. The ancillary individual cylinder cooling system of FIG. 6 and FIG. 5, in which cooling is provided by cool air or by air chilled by expansion valve 4', all controlled by ECM-27, may be employed in temperature control.

After the engine is in operation, the heat of combustion will likely supply all of the needed heat plus some in excess. In order to reduce the heat level of either the pre-combustion chamber 38' or the combustion chamber 38, chill cooling channel 36-B and/or 41-B with control valves 40-B and/or 42-B and the appropriate cooling or heat control jackets and conduits arranged surrounding the chambers 38 and/or 38', as shown in FIGS. 19-B, 19-C and 19-D can be utilized, perhaps in conjunction with temperature control of FIGS. 6 and 5. The proper temperature and density air-fuel charge can be supplied by an arrangement similar to compressors 1, 5 and 2" and intercoolers 6, 9 and 11 of FIG. 11-B, with conduit 9', alternatively leading directly to valve 40 on conduit 36-B, FIGS. 19-B, 19-C and 19-D or alternatively to expansion valve 10', pressure-drop distributor 11', optional bypass system R-X and evaporator tubes 27'*a*–27'*f*, leading to valve 40-B on conduit 36-B of FIG. 19-B, FIGS. 19-C and 19-D. Water cooling may also be used, either in addition to air or chill air cooling, or alone. The water can also be pumped through channel 41-B, FIGS. 19-B, 19-C and 19-D with any optional pilot fuel taking a different route (not shown), if conduit and fluid jacket 36-B are occupied, to chamber 38', 38'B or to combustion chamber 38 or 38-B of FIG. 19-C or 19-D.

Optional Operating Modes

Particular engine working cycles and Operational Designs are described under HCCI method A.

True HCCI Method F, Operational Design 19
Universal Spontaneous Combustion

Referring now to FIG. 19-C, there is shown a hemispheric-plus (perhaps 300 degrees, more or less), shaped combustion chamber 38-B, containing all of the ducts, jackets, valves and controls pictured and described for FIG. 19-B which are operated and controlled in the manner suggested for FIG. 19-B system. The shape of the combustion chamber allows control of charge temperatures by the charge being surrounded by combustion chamber 38 and piston crown and by being fitted with a centralized temperature control 37 which are surrounded by the same channels 36-B and 41-B and heat elements 24 and 37. Accurate control of the temperature of the air-fuel charge near piston TDC in combustion chamber 19-C allows spark ignition or HCCI operation which is the auto-ignition and general simultation oxidation of the air-fuel propulsion charge. In FIGS. 19-B, 19-C and 19-D, the sensors 21' and 21" signal ECM-27, which in turn signals various valves, one being a variable opening expansion valve 40-B for expanding chilled high pressure air through the evaporator coil or jacket of 36-B of FIG. 19-B, FIGS. 19-C and 19-D. The sensors also adjust the appropriate air and/or water controls and the electric heater controls to balance the temperature at the required level to spontaneously ignite the charge at the time piston is near or at TDC. After starting and warming up, ECM-27 may alternatively begin using chill cooling with the aid of water cooling, if needed, to maintain auto-ignition temperature in the combustion chamber 38 of FIG. 19-B, FIG. 19-C or FIG. 19-D and the cylinder, FIG. 6, as needed. If combustion chamber 38-B, FIG. 19-C or 19-D requires cooling between firing strokes, the primary fresh or chilled charge air can be pulled through inlet intake valves 40 and/or 40' of chamber 38-B, FIG. 19-C or FIG. 19-D and through channel 22', instead of through intake valve 18'. Alternatively, fresh cool air may be inducted by conduit 41 and 41' of chamber 38-B and out through cylinder inlet channel 22' of chamber 38' of FIG. 19-B or 38-B of FIG. 19-C or FIG. 19-D by the intake (1st) stroke of piston 22. In either case, the inlet valves would close after receiving the desired initial charge of air according to the Operational Design chosen.

Control of heating elements 37 and 39 in FIGS. 19-B, 19-C and 19-D, also controlled by ECM-27 in balance with cooling and/or heating system 41-B and 36-B, in conjunction with the heat-of-compression and combustion heat keeps the charge heat at auto-ignition at piston 22 TDC. The cooling system for FIG. 6, with expansion valve 4' of FIG. 5, also controlled by ECM-27, can regulate the temperature of the charge in-cylinder to keep it below auto-ignition temperature until the charge is out of the cylinder and in the combustion chamber.

Engine Operational Design 4 of FIG. 2 could be used in some engines to help control the temperature. In this design, cylinder 7 and pre-combustion chamber 38' of FIG. 19, FIG. 19-B and FIG. 19-C or combustion chamber 38-B, FIG. 19-C and FIG. 19-D can receive and pump through a fresh, cool or expansion chilled air charge between each firing cycle, pulling fresh or chilled primary air through inlet valves 40 and/or 40' or through conduits 36-B or 41-B, which can optionally be present in engine design of FIG. 19-C and FIG. 19-D also and out the lower passage 22 on the intake stroke of piston 22. Then this cool or chilled primary charge air can be pumped through and out of cylinder 7, and out exhaust valve (not shown) or through combustion chamber 38-B or preparation chamber 38' of FIGS. 19-B, 19-C or 19-D, out ancillary outlet valve 40 and/or 40' and/or back out conduit 36-B or 41-B, FIG. 19-B, FIG. 19-C or FIG. 19-D or ancillary outlet valves 40 or 40' (not shown) in chamber 38' or 38-B.

As stated, in any of HCCI Designs A through G, cylinder 7, combustion chamber 38 and 38-B and preparation cham-

ber **38'**, if the latter is present, can also be cooled between firing strokes, if necessary, by inducing and expelling a fresh cool or expansion chilled air charge. Methods are described for Design 4, of the engine of FIG. **2**, and for FIG. **2**-C, FIG. **11**-B, FIG. **18**-B and FIG. **18**-C.

Further instruction for engine operation for HCCI Method F is found under HCCI Method A with references to the advantages of the various engine designs. The engine working cycle is described for engines Operational Designs 1 through 13. HCCI Method F operates in all Operational Designs 1 through 13.

The advantages of this engine cycle are:

Higher efficiency.

Greater power and torque.

Longer engine life.

Multi-fuel capabilities.

Greater reliability.

The operation of the engine is the same as the basic engines of FIG. **1** to FIG. **5** and FIG. **7** and FIGS. **8**–**10** and FIG. **18**, FIG. **18**-B and FIG. **18**-C, utilizing either of engine Operational Designs 1 through 13 for greater torque, power, and durability with low fuel consumption and ultra low polluting emissions.

Advantages:

Ultra low emissions.

Greater power.

Increased fuel economy.

Increased engine durability.

Multi-fuel capability.

True HCCI Method G, Operational Design 20
Universal Spontaneous Combustion

Referring now to FIG. **19**-D, there is shown a hemispheric-plus (perhaps 300 degrees, more or less, shaped combustion chamber **38**-B, containing all of the ducts, jackets, valves and controls pictured and described for FIG. **19**-B and FIG. **19**-C which are operated and controlled in the manner suggested for FIG. **19**-B, FIG. **19**-C system. The shape of the combustion chamber allows control of charge temperatures by the charge being surrounded by combustion chamber **38** and piston crown. Alternatively, the combustion can be cylindrical as indicated by phantom lines **38**-C. Accurate control of the temperature of the air-fuel charge near piston TDC in combustion chamber **19**-D allows spark ignition or HCCI operation which is the auto-ignition and general simulation oxidation of the air-fuel propulsion charge. In Designs, FIGS. **19**-B, **19**-C and **19**-D, the sensors **21'** and **21"** and any other sensors required, signal ECM-**27**, which in turn signals various valves, one being a variable opening expansion valve **40**-B for expanding chilled high pressure air through the evaporator coil or jacket of **36**-B of FIGS. **19**-B, **19**-C and **19**-D. The sensors also adjust the appropriate air and/or water controls and the electric heater units **39** and **37** (**37** being both optional spark plug **37** and central heater optionally combined as needed), in conjunction with heat-of-compression, to balance the temperature at the required level to spontaneously ignite the charge at the time piston is near or at TDC. After starting and warming up, ECM-**27** may alternatively begin using chill cooling with the aid of water and cooling, if needed, to maintain auto-ignition temperature in the combustion chamber **38**-B of FIG. **19**-B or FIG. **19**-C and FIG. **19**-D and the cylinder (FIG. **6**), as needed. If combustion chamber **38**-B, FIGS. **19**-B, **19**-C and **19**-D requires cooling between firing strokes, the primary fresh or chilled charge air can be pulled through inlet valves **40** and/or **40'** of chamber **38**-B, FIGS. **19**-C and **19**-D. Alternatively, fresh cool air may be inducted through conduit **41**-B and its cooling jacket of chamber **38**-B of FIGS. **19**-B, **19**-C and **19**-D and through cylinder inlet channel **13** of chamber **38'** of FIG. **19**-B or channel **22'** of FIGS. **19**-C and **19**-D by the intake (1st) stroke of piston **22**. In either case, the inlet valve **40** or **40'** would close after receiving the desired initial charge of air according to the Operational Design desired.

Control of heating elements **37** and **39** in FIGS. **19**-B, **19**-C and **19**-D, also controlled by ECM-**27** in balance with cooling system **41**-B and **36**-B in conjunction with the heat-of-compression, and combustion heat keeps the charge heat at auto-ignition level at piston **22** TDC. The cooling system for FIG. **6**, with inlet orifice or expansion valve **4'** of FIG. **6**, also controlled by ECM-**27**, can regulate the temperature of the charge in-cylinder to keep it below auto-ignition temperature until the charge is out of the cylinder and in the combustion chamber.

Engine Operational Design 4 of FIG. **2** could be used in some engines to help control the temperature. In this design, cylinder **7** and pre-combustion chamber **38'** of FIG. **19** and FIG. **19**-B or combustion chamber **38**-B of FIG. **19**-C and FIG. **19**-D can receive and pump through a fresh, cool or expansion chilled air charge between each firing cycle, pulling fresh or chilled air on the intake stroke through inlet valves **40** and/or **40'** or through conduits **36** or **41**, which can optionally be present in engine design of FIG. **19**-C and FIG. **19**-D also and out the lower passage **22"** on the intake stroke of piston **22**. Then this cool or chilled primary charge air can be pumped through and out of cylinder **7**, and out exhaust valve (not shown) or through combustion chamber **38**-B or preparation chamber **38'** of FIG. **19**-B, out ancillary outlet valve **40** and/or **40'** and/or back out conduit **36**-B or **41**-B, FIG. **19**-B-FIG. **19**-C or ancillary outlet valves (not shown) in chamber **38'**, **38** or **38**-B.

As stated, in any of HCCI Designs A through G, cylinder **7**, combustion chamber **38**, **38**-B and preparation chamber **38'**, if the latter is present, can also be cooled between firing strokes, if necessary, by inducing and expelling a fresh cool or expansion chilled air charge. Methods are described for Design 4, of the engine of FIG. **2**, and for FIG. **2**-C, FIG. **11**-B, FIG. **18**-B and FIG. **18**-C.

Further instruction for engine operation for HCCI Method G is found under HCCI Method A with references to the advantages of the various engine designs. The engine working cycle is described for engines Operational Designs 1 through 13. HCCI Method G operates in all Operational Designs 1 through 13.

The advantages of this engine cycle are:

Higher efficiency.

Greater power and torque.

Longer engine life.

Multi-fuel capabilities.

Greater reliability

Method G

Operation of the HCCI Engine

The operation of the engine is the same as the basic engines of FIG. **1** to FIG. **5**, FIG. **7**, FIGS. **8** to **10**, FIG. **18**, FIG. **18**-B and FIG. **18**-C, utilizing any of engine Operational Designs 1 through 13 for greater torque, power and durability with low fuel consumption and ultra low polluting emissions.

The means on initial temperature control is described above and for method G consisting of adjusting charge temperature at a level just below auto-ignition temperature of the fuel-air propulsion mix. Auto-ignition is accomplished by a last moment, sudden increase in heat-of-compression at near piston TDC with an alternative and optional means of spark ignition, the latter to insure reliability.

Ignition

Charge density has been adjusted to the requirements of the duty cycle of the engine. The charge temperature has been adjusted to a level less than auto-ignition for spark ignition and at near TDC, the charge is ignited in that manner.

The HCCI operation charge temperatures are adjusted by means described in method **1**, FIGS. **19**, **19**-B, **19**-C and **19**-D. At near TDC, for example, at the point projection **22'** on piston **22** enters port **22"** of combustion chamber **38**-B, sensors **21'** and **22"** with perhaps other sensors sense and signal the temperature and density levels to ECM-**27** to adjust flow rates by way of valves **3**, **4**, **5**,**6** and **10'** to produce the conditions of the air-fuel charge desired at that particular point.

This temperature is slightly lower than auto-ignition temperature. As piston **22** completes the compression stroke, the outer face of the piston rises to nearly flush with the face of the engine head **10** and piston projection **23** has entered port **24** of head **4** and is now flush with the lower part of combustion chamber **38**-B (chamber **38**-B may be semi-hemispherical or cylindrical in shape as illustrated by **38**-B and **38**-C [the latter in phantom] of FIG. **19**-D).

As piston crown A approaches face of engine head **4**, piston projection **22'** enters and continues to travel in the restricted space of combustion chamber port **22"**. (There are no pressure sealing rings on piston projection **22'**). This means that as piston crown A approaches engine head face **4**, all of the fuel-air charge above the full piston crown is compressed toward and into port **22"** and escapes confinement in the cylinder **7** by being forced through the small space surrounding projection **22'** traveling up into combustion chamber **38**-B or optionally **38**-C. As pressures above piston crown A and in chamber **38**-B attempt to equilibrate, vortical motion occurs in the fluids in the narrow passages between **22'** and **22"** and throughout chamber **38**-B, further stirring and mixing the fuel-air charge. This produces equilibration in fuel, air and temperature of mixture and assures absence of cyclic variations as combustion occurs.

The sudden rise of temperature in the fuel-air charge at this time, caused by the short projection **22'** producing instantaneous pressure and heat increase. causes a uniform low temperature universal oxidation of the charge which is true HCCI operation.

The engine can be alternatively started up by spark plug **37** firing at TDC which is the last position for firing and obtaining maximum efficiency. In a few moments, the temperature in chamber **38**-B will become conducive to spontaneous ignition and ECM-**27** tells spark plug to cease firing.

Optionally, ECM-**27** tells the electronic ignition system each time a cylinder should fail to fire, then spark plug **37** will spark just after auto-ignition should fail to occur. This assures reliable cylinder firing.

Alternatively, spark plug **37** may continue firing at TDC. This is a little later than optimum ignition timing. Therefore, at such a time that auto-ignition should fail to occur, then only perhaps 5 degrees crank angle later, spark plug **37** fires to ignite the charge, assuring fail-safe and smooth engine ignition.

Refrigeration Cooling and Powering by Compressed or Liquified Natural Gas or Hydrogen

Briefly noted, there is shown three schematic drawings, (FIG. **20**, FIG. **21** and FIG. **23**) representing yet another embodiment of apparatuses useful in the field of air conditioning, power generation and heating, from which yet other methods of operation can be performed and will be described. Six alternative systems are depicted, utilizing highly condensed gas, such as compressed natural gas or hydrogen or liquefied natural gas or liquefied hydrogen for, (1) compression refrigeration before the gas is combusted by being consumed for (2) gas fired absorption chillers, or (3) burned in reciprocating or rotary turbine engines or (4) consumed for furnace for steam turbines or (5) consumed for space heating. For liquefied natural gas, the first task is optionally cryocooling which is then followed by the several succeeding tasks.

Co-Generation Using Compressed Natural Gas or Compressed Hydrogen for Compression-Expansion and Absorption Chilling or Fueling Other Combustion Tasks with Only Combustion Consuming the Gas

Referring now to FIG. **20**, shown is a schematic sectional view of a natural gas or hydrogen transmission pipeline, **1** or a compressed natural gas or hydrogen gas storage tank **1***a*, (in phantom). Both of these have an associated outlet conduit **2**, a conduit (in phantom) from conduit **43**, FIG. **21**, optional pressure regulator **3**, conduit **3'** optional pressure regulator **4**, metering or expansion valve **10'**, pressure-drop-distributor **11'**, distributor tube(s) or evaporator coils **17***a*, freezer-chiller box **5**, air inlet conduit **6***a*, air outlet conduit **6**, collective conduit **7**, optional gas heater/cooler or compressor **8**, and box **9**. Apparatus **5** in FIG. **20** represents a compression-expansion refrigeration system for various cooling tasks, including space cooling, engine intake air cooling, refrigerator or freezer, etc. Box **9** represents a gas fueled refrigerator (absorption chiller) or a gas fueled and cooled internal combustion engine (ICE) or a gas fueled and cooled gas rotary turbine engine or a gas fueled steam turbine or a gas fueled boiler furnace, or a gas fueled furnace space heater, or any other system operated or fueled by gas, natural or hydrogen or by any other suitable flammable gas. Associated with item **9** are a vent or exhaust pipe **12**, optional heat exchanger **13** and vent or exhaust line **14**. All of these are designed for utilizing compression cooling, absorption cooling and fueling by compressed natural gas (CNG), compressed hydrogen (CH_2) or as depicted and described for FIGS. **21** and **22** for liquefied natural gas (LNG) or liquefied hydrogen (LH) to perform work before the gas is consumed as fuel in **9** of FIG. **20**.

In addition, optional components in FIG. **20** (in phantom) are: a desiccant system **18**, desiccant wheels containing silica gel or other desiccants **19**, drying heater **20**, drying vent **22**, gas supply line **23** leading from conduit **16**, to fuel control-pressure regulator **21** (optional), optional hot exhaust line **28** leading to desiccant dryer **20**, for drying desiccant, chilled air outlet register **25**, optional conduit **6** line block **26** (in phantom) and chilled air outlet register **27**.

Co-Generation Using Liquefied Natural Gas (LNG) or Liquefied Hydrogen (LH) for Cryogenic Cooling Compression-Expansion Cooling, Absorption Cooling and Fueling Tasks

Referring now to FIG. **21**, there is shown a schematic sectional view of a storage tank **18**, containing liquefied gas,

such as liquefied natural gas (LNG) or liquefied hydrogen (LH), with associated liquid outlet withdrawal tube **20**, flow economizer regulator **5**, associated conduit fuel shut off valve **11** and associated conduit leading to excess flow valve **9** with associated conduit leading to optional cryogenic pump **40**. Optional pump **40** has an optional bypass system comprised of bypass valve **35** and conduit **34**, to be used at any time cryogenic pump **40** is not required. A conduit **43** conveys liquefied gas to optional pressurizer **15** through which the conduit optionally forms coils and exits to an optional shut-off valve **5'** on associated conduit **43**. Pressurizer **15** receives the LNG or LH effluent in a conduit **43** which coils inside the pressurizer casing in order to expose the coil to an optional fluid which is optionally pumped through, and then, after operating pressure builds in pressurizer **15**, the LNG or LH exits to conduit **43** outlet. An inlet port **41** to the pressurizer **15** can optionally conduct fluid (air or liquid) through and around pressurizer **15** coils. The warming fluid is then expelled through duct or port **42**, optionally to the atmosphere. The LNG or LH is slightly warmed in **18** or **15**, if necessary, to raise boil-off vapor pressure in tank **18** or in pressurizer **15** to expel the liquefied gas through conduit **43** which is alternatively connected to conduit **2** in FIG. **20**. Conduit **43** is first alternatively connected to inlet of flexible duct **4** within electric superconductor cable **3** of FIG. **23** with the exit port **4'** of duct **4** being now connected to conduit **2** in FIG. **20**. (When liquefied gas is used first to super cool electric power cable **3**, FIG. **23**, the liquefied gas tank **18** or pressurizer **15** is kept cold and not heated, but pumped from tank **18** by cryogenic pump **40** and out conduit **43** and first through conduit **2**, FIG. **20** and to succeeding apparatuses.) This provides two preferred means of supplying LNG or LH at a volume and pressure needed to alternatively push the liquefied natural gas or hydrogen through (a) cryocooling tube **4** in FIG. **23** for sub-cooling electric superconductor power cable **3**, as depicted in FIG. **23** and then into a pressurizer, as **15**, FIG. **21**, to build pressure required for (b) compression-expansion refrigeration shown in FIG. **20**. These two refrigeration systems can be accomplished with no chemical change in the gases. Another use of the same gas can be for a third refrigeration system which is labeled here as (c) absorption-refrigeration, a system which consumes the gas as fuel. Therefore, the gas can be used for two tasks before being consumed in a third task, thus providing a co-generation system in which one volume of gas performs three services. Other optional tasks for this chemically unchanged fuel are (d) firing a gas turbine for producing power, (e) firing steam turbine for electric power production, (f) engine (ICE or turbine) charge air chilling, (g) firing a reciprocating ICE for electric power production and (h) firing space heating furnace and other apparatuses, depicted in FIG. **20**. These latter described operations are accomplished and fueled by CNG or LNG, or CH^2 or LH and associated apparatuses. System (c) to (g) consume LNG or LH as operating fuels after the LNG or LH has already performed tasks (a) and/or (b), indicated above. As indicated above, the same units of liquefied gas can supercool electric superconductor cable **3**, air-condition the power plant (after exiting the cable duct), spin an impulse turbine and fuel a gas turbine or ICE which produces the electric power, or alternatively provided absorption chilling, steam turbine, heating furnace, etc.

Operation of LNG or LH Fuel Tank

Boil-off vapor pressure in fuel tank **18**, with back pressure up o 280 psi, presses the liquefied gas out liquid withdrawal tube **20** through valves **11** and **9**, through valve **35**, bypass conduit **34**, through optional pressurizer **15** and out conduit **43**, which in use is alternatively connected to inlet port **4** of cryogenic cooler tube **4** of electric superconductor cable **3**, shown in FIG. **23** and which outlet **4'** of tube **4** is alternatively connected to conduit **2** in FIG. **20**. Alternatively, outlet **43** of FIG. **21** is connected directly to conduit **2** in FIG. **20** when cryogenic cooling is not needed. If the boil-off pressure in tank **18** is too low, bypass valve **35** optionally directs the LNG or LH_2 from tank **18** to cryogenic pump **40** which pumps the effluent through conduit **43**. If needed and cryogenic cooling is not required, atmospheric air or other fluid is pumped into inlet duct **41** of pressurizer **15** and circulates around conduit **43** and the exists through port **42** after imparting slight heat to the liquefied gas, causing pressurizer **15** to build desired pressure. Alternatively, boil-off vapor pressure is allowed to build in tank **18** by inducing slight heat in tank and/or by restraining the boil-off pressure until desired operating pressure is attained to express the liquefied gas from conduit **4**. At the point the boil-off pressure is to drive the vanes of the turbine, the liquefied gas is completely vaporized, optionally in a system such as vaporizer **15** of FIG. **23**. When an impulse turbine is to be driven by compressed or vaporized liquid gas, it is a driver solely or in a co-generation system and is fitted into the scheme at the place in the system that the compressed gas or the liquefied gas vapor is best suited as an impeller. Then the gas is collected for further use.

The LNG or LH in tank can be kept at the desired temperature and the liquefied gas is pressed out conduit **43** outlet, and, in the case of the first use suggested, into inlet **4** of superconductor conduit and through conduit **4** of FIG. **23**. Then after cooling superconductor cable **3**, it exits an outlet duct or valve **4'**, FIG. **23** into a system to re-liquefy or store what now may be partial gas effluent, or alternatively into conduit **2** of FIG. **20** by way of conduit (in phantom) depicted as being from **43** of FIG. **21**. Hereafter, it can operate any or all of the apparatuses depicted and described for FIG. **20** and alternatively driving a turbine. Alternatively, the LNG or LH from conduit **43** may go directly from conduit **43** of FIG. **21** to conduit **2** of FIG. **20**, or to any or all of the apparatuses depicted and described for FIG. **20**. For example, it can go directly to fuel the turbine or ICE **9** of FIG. **20** which is preferable to the engine producing the electric power going through electric superconductor cable **3**. Alternatively, expansion valve **10'** of chilled system of FIG. **20** creates back-pressure needed in pressurizer **15** or LNG or LH_2 tank **18**, to build operating pressure (ideally 200–280 psi) for expansion chilling of item **5** (in this case, a refrigerator) of FIG. **20**, or to drive a turbine, also represented by item **5**, whether conduit **43**, FIG. **21**, leads first to conduit **2** of FIG. **20**, or to conduit **4** of FIG. **23**.

The boil-off pressure in tank **18** can be sufficient to present the amount of liquefied gas needed to supply the equipment depicted in FIG. **23** and FIG. **20**. Alternatively, valve **35**, FIG. **21** is closed to bypass conduit **34** and the liquefied gas is pumped by cryogenic pump **40** through the pressurizer **15**, where the liquefied gas builds pressure, if needed, to the desired level within pressurizer **15** and then, at the pressure desired, expels the LNG or LH out conduit exit port **43** into conduit **2** of FIG. **20** or alternatively, (without the temperature being changed and preferably at minus 260° F. or lower) through inlet **4** of conduit **4'** of FIG. **23** and from outlet of conduit **4'** FIG. **23**. From there, the liquefied gas can be optionally ducted to conduit **2** of FIG. **20** and/or to any of the other apparatuses described. Cryogenic pump **40** prevents any unwanted pressure escaping the pressurizer **15** back into LNG or LH tank **18**, if the pressure

E-FILED
Thursday, 09 February, 2006 05:32:48 PM
Clerk, U.S. District Court, ILCD

in **15** is greater than that desired in tank **18**. Ideally, boil-off vapor pressure in storage tank **18** will present the LNG or LH to conduit **43** bypassing cryogenic pump **40**, by bypass system **35** and **34** when the level of pressure in tank **18** is that desired. The temperature in tank **18** is determined by the pressure of the LNG or LH stored in the tank and which pressure can be adjusted as also in pressurizer **15** (As stated earlier, the pressure desired in tank **18** can be produced by exerting back pressure on the tank **18** until working pressure is attained or by slight heating of contents).

If necessary, the pressure is produced in pressurizer **15** by passing fluid in inlet port **41**, through casing of pressurizer **15** and out port **42**. The temperature adjusting fluid in casing of **15** can be a fluid such as liquid or other type of coolant or preferably return or ambient temperature-air from cooled or heated space such as a building, or even ambient temperature atmospheric air. In either case, the chilled fluid exiting port **42** can be directed to supplement other means of chilling or provide primary chilling for a truck-cab or bus, etc. Not much heat is required to raise the pressure of LNG or LH in tank **18** or **15**. The former generally is stored at 260° below zero F. temperature. LH is stored at minus 460 degrees Fahrenheit For expansion chilling with LNG or LH, the temperature in **18** or **15** could be as low as minus 168° F., or lower, and for compressed gas, perhaps a pressure of 260 psi or even lower. (A passenger bus powered by CNG, LNG, CH or LH can very economically provide air conditioning for the passengers and then use the chemically unaltered gas to power the bus engine.) This system can also be utilized for refrigerated trucks, etc.)

Using a conventional air-conditioning system, a fifty passenger bus would require about 50 horse power of energy to air-condition the vehicle. This amount of fuel can be conserved by utilizing a co-generation system in which expanding gas produces work as described herein.

Operation Method

Compressed gases, such as natural gas and hydrogen are obtained from a storage tank such as tank **1***a* or from pipeline **1**, of FIG. **20**. Liquefied gases are provided by tanks as in FIG. **21**, item **18**. In the case of compressed gas, it can be stored at pressures of 3,600 psi, and can be obtained by pipeline at nearly the same pressures. Liquefied gases can super-cool and afterward develop working pressure and perform work and the same gas can then be consumed as fuel. Described here are methods of utilizing the super-cooling ability of liquefied gas and the pressure drop of liquefied or compressed gas, in either case, to perform work before the gas is consumed as fuel.

Item **4**, FIG. **23** is a flexible duct for (a) cryo-cooling an electric super-conductor cable. Box **5**, FIG. **20** represents (b) a refrigerator/freezer or air conditioner or (c) an impulse turbine. Box **9** represents one or more additional tasks which can be performed in which the same gas can now be consumed as fuel. These are (1) gas fueled absorption chiller, (2) a gas fueled internal combustion engine (ICE), (3) a gas fueled rotary turbine, (4) a gas fueled steam turbine, (5) a gas fueled space heating furnace, or any other system fueled by gas, natural or hydrogen. The gas can be used as in FIG. **20** and FIG. **23** for one or more chilling systems or to drive an impulse turbine and then, as shown in conduits **16** and **29**, the gas can then be directed to one or more other tasks, or conduit **16** can have any number of division into conduits to supply any or all of the systems (1) through (5) suggested herein.

System (A), in which LNG or LH alternatively is ducted first for (a) supercooling superconductor cable **3** through flexible duct **4**, FIG. **23** and then by conduit **2** through optional pressure regulators **3** or **4**, FIG. **20** for optionally adjusting the mixture of liquid and gaseous gas volume and pressure to that ideal for performing the next task, in which the fuel is expanded by expansion valve **10'** for the second task, (b) freezing, chilling or air conditioning, (c) driving an impulse turbine and (d) providing fuel needed for the third task, absorption chilling or fueling a gas turbine or any other system described for **9** of FIG. **20**. First, the liquefied gas is channeled into flexible duct opening **4** of superconductor electric cable **3** and out end of duct **4'** to go collectively with other gases already used for super-cooling to be re-liquefied or alternatively directed to conduit **2**, FIG. **20** to first provide "expansion" chilling or optionally, if the pressure is too low, to pressurizer similar to item **15**, FIG. **21**, if necessary, to build operating pressure. It is then directed through conduit **2** of FIG. **20** or, alternatively, the affluent goes directly from conduit **43** of FIG. **21** to conduit **2** of FIG. **20**. It then goes to metering or expansion valve **10'**, pressure-drop-distributor **11'** and distribution tubes (evaporator coils) **17***a*. The LNG gaseous mixture or LH gaseous mixture expands in expansion valve **10'**, pressure drop distributor **11**, evaporator coils **17***a*, thus forming a refrigerator system, alternatively providing chill cooling for space air-conditioner, freezer-chiller, or for chilling through-put dry air or for driving an impulse turbine, all represented by **5**, FIG. **20**. Alternatively, the air is dried by **19** before chilling in **5** and the chilled air with increased flow is then passed to **9** where the air is further chilled by **9** (as **9** here represents an absorption chiller). Alternatively, the chilled air in duct **6** from chiller **5** is blown through register **25** for servicing one purpose. In this case, duct **6** is blocked at **26** and absorption cooler receives dry air from duct **24**, off of duct **6***a* from desiccantor **18**, after drying by desiccant **19** in **18**. The air from duct **24** is then chilled in absorption chiller **9** and blown through register **27**, to fulfill the same purpose or a different one from the chilled air that emitting from duct **25**.

Alternatively, the compressed or liquefied gas is directed from the first chosen task to any task or tasks suggested and is not necessarily used in the order suggested.

After the liquefied gas has been used to a) cryogenically cool superconductor cable **3** and after the gas has emerged from b) the task of chiller box **5** (intake charge air for a gas turbine, or ICE, or refrigerating/freezing or providing air conditioning **25**), the chemically unaltered gas is collected and directed by duct **7** through **8** which is a heat exchanger for heating the gas as for fueling a gas turbine or alternatively, **8** is a compressor for recompressing the gas fuel, and for suction to enhance cooling, and for c) fueling ICE or gas turbine **9**. The gas is ducted by conduit **16** to fuel absorption cooler **9** or for one or more of the other tasks mentioned that consumes gaseous fuel, such as gas turbine, steam turbine, internal combustion engine (ICE), steam engine, space heating, etc.

The description of the desiccantor **18** system, FIG. **20**, that air passes through for drying contains wheels **19'**, containing a desiccant, such as silica gel through which the air passes. The desiccant is dried by gas or electric burner **20** which is alternatively supplied gas fuel through tubing **23**, fed from conduit **16**. The dry air is then passed through chiller **5** and alternatively to register **25** where the cold air is dispersed to a room, etc., with duct **26** being closed. Alternatively, a second portion of dry air is fed absorption chiller **9** by conduit **24** where it is chilled by absorption chiller **9** and blown through register **27** for more cooling of perhaps another or same place or for another task. After firing (fueling) absorption chiller **9**, the combusted gases are

passed through vent or stack **12** through heat exchanger **13** where heat can be extracted for some other task. Alternatively, some of it is directed by duct **28** to the desiccator **18** to dry the desiccant, eliminating the need for burner **20**.

System (B). Chilling charge air for internal combustion engines (ICE) in which **9** is an ICE or turbine and in which CNG, LNG or CH, LH both chills air charge and fuels engines. As in system (A), the liquefied and/or gaseous fuel (LNG, CNG, LH or CH), optionally cryocooling superconductor electric cable **3**, is ducted by conduit **2** through optional pressure regulator **3** or **4** for adjusting the gas volume and pressure to the pressure needed for compression-expansion refrigerator **5** or impulse turbine and then the gas performs the end task of fueling an ICE **9**, in which the fuel is consumed after first providing air charge cooling (by refrigerator **5**) needed for the duty cycle of the system. First, the liquefied gas is channeled alternatively from conduit **43** of FIG. **21**, optionally through superconductor duct **4**, out duct exit **4'** and to conduit **2** of FIG. **20** and to metering or expansion valve **10'**, pressure drop distributor **11'** and distribution tubes (evaporator coils) **17***a*. As the gases expand in expansion valve **10'**, pressure drop distributor **11'**, the evaporator coils **17***a* perform task listed heretofore as that of chilling through-put dry air in chiller **5** through which duct **6***a* and **6** conducts air, alternatively dried by desiccantor **18**, which air enters **9**, here representing an internal combustion engine (ICE) wherein the chilled air charge is inleted into the air intake system or a carburetor or central port, or any place deemed appropriate.

The gases have been channeled, expanding through the evaporator **17***a* of chiller **5**. The gases are then received collectively by conduit **7** and passed through item **8**, which is a fuel heater, or a suction pump-compressor for recompressing the gas fuel for turbines, if found necessary. The gaseous fuel is then introduced and mixed with the chilled air from duct work **24**, in item **9**, now an ICE, preferably in the carburetor or air intake or at any place known to those in the art. The fuel is ignited in the engine to produce greater-than-normal power. The exhaust valve (not shown) opens and the exhaust gases are expelled through exhaust line **12**, heat exchanger **13** and exhaust pipe **14** to atmosphere.

System (C) Chilling Air Charge for Rotary Turbine, where **9** in FIG. **20** is a gas fired turbine engine and **8** is an optional gas reheater or compressor, if needed. After cryocooling electric cable, the partly liquefied and/or gaseous fuel chills incoming charge air by chillers, drives an impulse turbine and fuels gas turbine. Alternatively, after the gaseous fuel has emerged from the task of expansion-chilling intake air for a turbine engine **9**, it is collectively directed by duct **7** through **8**, which is a heat exchanger for heating the gas, as for fueling a turbine. Alternatively **8** is a compressor for optionally recompressing the gas charge for fueling turbine, **9**. The cold charge air is then mixed with the turbine fuel and combusted for a more dense charge. Chilling the air charge for a turbine produces greater steady-state power and hence will also change the factors for calculating the de-rate value when operating the turbine in a hot climate or high altitude.

System (D). The high pressure partly liquefied and/or gaseous fuel, after cooling superconductor electric cable **3**, provides both compression chilling such as for air conditioning and/or as an impulse turbine in **5**, FIG. **20** and also fuels boiler furnace for a steam turbine **9**.

System (E). The high pressure partly liquefied and/or gaseous fuel, after cooling superconductor electric cable **3**, provides compression chilling, such as for air conditioning and to drive an impulse turbine in **5**, FIG. **20** and also fuels space heating furnace **9** or, alternatively fuels absorption chiller, also represented by **9**.

Compressed or Liquefied Natural Gas or Hydrogen for Refrigeration Systems, Continued Discussion

The percentage of natural gas or hydrogen mixed in the air charge for fueling an engine is as high as 15% of the total charge. If the first task in a co-generation is refrigeration or air conditioning, the pressure of the liquefied or compressed gaseous fuel, (natural gas, hydrogen, etc.) is adjusted to the ideal pressure, perhaps 280 psi, more or less, for most efficient expansion cooling and to be then used mixed with the air for fuel requirements.

Triple or quadruple co-generation of LNG or LH can provide (a) cryo-cooling superconductor electric cables, (b) compression expansion chilling and/or (c) driving an impulse turbine and (d) absorption chilling. Alternatively, it then provides for fueling of the associated power generator turbines for which the liquefied gas is serving as electric cable cryo-cooler or fueling any of the systems suggested for item **9** of FIG. **20**.

Dual or Triple Use (Co-Generation) of Liquid Super-Coolant for Superconductor Cable

Referring now to FIG. **23**, there is shown an electric superconductor cable used for transferring electric current without resistance in the conductor. FIG. **23** shows skid wires C for protecting the cable. C-**1** is electrical insulation; **2** is two layers of thermal insulation; **3** is superconductor tape (electric wire); **4** is the entrance port to flexible duct **4'** for liquid coolant; **5** is liquefied natural gas (LNG) or liquefied hydrogen (LH) or, alternatively liquefied nitrogen (LN). In a co-generation system, liquefied nitrogen is capable of performing the first two tasks, that of cooling superconducting cable and compression expansion refrigeration as described herein for co-generation systems using liquefied natural gas or liquefied hydrogen. After task two, the nitrogen can be expelled into the atmosphere or can be re-liquefied.

Co-Generation

Either LNG or LH is a very efficient coolant for superconductor electric cables. LNG has a temperature of minus 296° F. while the temperature of liquid hydrogen is minus 423° F. Either can be used as (a) an efficient electric superconductor coolant and at the power plant (or taken off at sub-stations and piped to point of use), the exiting LNG or LH_2 can be utilized for (b) expansion cooling. (Liquefied nitrogen can perform tasks a and b only.) The same flammable gas, chemically unaltered, can be used for (c) driving an impulse turbine and thereafter for any of the following: (1) fueling gas fired absorption cooling, for (2) fueling gas fired engines (ICE generator), for (3) fueling gas fired turbine generator, for (4) fueling gas fired steam turbine generator and/or for (5) fueling gas fired heating boilers, etc. These uses are depicted and described for FIG. **20** through FIG. **23**. The triple or quadruple service use of the LNG or LH is in cooling superconductor cable **3** in FIG. **23**, then channeling the liquefied gas to an expansion chiller **5** in FIG. **20** and then for spinning a fueling or for gas fired absorption chiller **9**, also in FIG. **20** or alternatively, for fueling (having consumed for) one or more tasks (a), (e), (f) and (g) above. Therefore, the same LNG or LH provides cryocooling and two other types of chilling FIG. **20** on the same volume of

gas. In addition, the same coolant gas can first turn a turbine and then any or all of the following: fuel engines, turbines and boilers as described above and in FIG. **20** and FIG. **21**.

To reiterate briefly, the coolant LNG, or LH can be put into flexible duct **4** of superconductor cable **3**, FIG. **23** at the sub-stations and taken off at the power plant or taken off at other substations and piped collectively to the power plant and used there to chill (expansion) cool and drive the impulse turbine and then fuel the generators or gas turbines or ICE generators and/or be used as fuel for further chilling absorption. After using to super cool electric cable **3**, the coolant liquefied gas can be ducted off at the power station or at a sub-station and transported to the plant in a conduit formed under another layer of insulation **2** and can be used or stored at any convenient place for use in cooling, firing turbines, etc., or can be stored, re-liquefied or sold. Alternative liquefied gas, after use as sub-coolant, can be taken off flexible duct **4'** and ducted collectively in a separate conduit to the power plant or to whatever point the gas can be used or stored.

[1]Liquid nitrogen, boiling point of 77K (−320 degrees F.), can efficiently perform the first two tasks: (a) cryocooling superconductor electric cable and (b) provide expansion cooling as described above for LNG or LH_2 for FIG. **20** to FIG. **23**. The nitrogen can then be vented to the atmosphere at conduit **29**, FIG. **20** or may be re-liquefied.

[1]New Scientist, 13 Oct. 2001, vol. 172 #2312

A British publication[1] in an article entitled *The Big Chill* discusses the need for and the progress of transmitting electric power long distance by way of superconductor cables, which improves the efficiency of electrical transmission by at least ten percent. Among other statements, they say "Superconducting cables can carry at least three times the power of the copper it replaces" and "We are at the point where it is worth running superconductors, and everyone is beginning to realize it".

[1]New Scientist, 13 Oct. 2001, vol. 172 #2312

They further discuss the very significant progress made in researching the technology and have performed a large test project in Frisbie, a neighborhood in Detroit, Mich. In this system, the superconductor cables must be kept very cold. In the wrap-up of the article they state: "The remaining problem is that the refrigeration technology needed to keep the superconductor cable supplied with liquid nitrogen is not ready for commercial use. The cryogenic shed at Frisbie is reliable, but it was put together specifically for this project. It has lots of back-up systems to ensure that the project doesn't fail simply for lack of coolant, which means that it wouldn't be economical for general use."

The invention described for FIG. **20**, FIG. **21** and FIG. **23** provides a very reliable answer to the problem of the cooling of superconductor cables with the added benefit of providing a system of co-generation, whereby liquefied flammable gases (and also compressed gases) can be used for many other purposes after being used for cooling the superconductor electric cables or compression chilling, etc. Also, compressed gases form a co-generation system as described for FIGS. **20** through **23**.

Cold Air Supercharged Epitrochoid Rotary Engine Operating in Any of Operational Designs 1, 2, 3 or 4

Referring now to FIG. **24**, there is shown a perspective view (with portions in cross-section and schematically) an improved epitrochoid (Wankel) type rotary internal combustion engine which is cold air supercharged and operating optionally in any of the four Operational Designs as described for engines of FIG. **2**.

These Designs briefly described are:

Operational Design 1: In this Design, intake port **3N** (dotted line) FIG. **24** with normal port size, the quantity of a primary air charge drawn into compression chamber **5**-C through port **3N** by rotor **2**, is as in the normal Wankel rotary engine with the engine receiving as large amount of air or fuel-air charge as possible, which with the combustion chamber being of normal size, produces normal compression and expansion ratios. Compression of the charge begins as the following rotor lobe covers port **3N**. During the compression process, a dense, cooled or chilled supplementary supercharging charge of air or fuel-air (received, compressed and cooled externally) is injected by valve **9** through port **4'** or port **9'**, which optionally is fitted with an expansion valve **4**, into the compression chamber **5**-C, preferably late in the compression process. This provides cooling along with increased charge density and turbulence. Compression continues as rotor **2** continues motion until combustion chamber **5**-A is at or near TDC, FIG. **24**B. There, the charge is ignited, expanding into expansion chamber **5**-E, producing rotor movement for the power, scavenging, air intake and compressing functions of rotor **2** lobes for great power, torque and efficiency with low polluting emissions. With exhaust port **6** placed in the wall of stator **1** end plate **18'** and away from the periphery of the end plate as the expansion chamber is scavenged through port **6**, centrifugal force spins the heavier fuel fumes away from and past the exhaust port **6** to be returned to combustion chamber **5**A with the new air charge for further combustion. In this Design, compression and expansion ratios are equal.

Operational Design 2: In Design 2, the primary air or fuel-air drawn in the port **3N** is again as normal for the epitrochoid rotary engine, to capture again a full charge, but the combustion chamber **5**-A of FIGS. **24** and. **24**-B is significantly larger in volume than that of current engines, thus producing a low substandard compression ratio for low heat-of-compression for the initial portion of charge. Also, in this Design, compression and expansion ratios are equal.

During the compression process of the primary air drawn through inlet port **3**-N, a dense cooled or chilled air or fuel-air charge, which was received, compressed and cooled or chilled outside of the engine, is injected by valve **9**, through port **4'** or port **9'**, which can be an expansion valve **9'**. Since the initial (primary) charge is a very low compression ratio, it produces small heat-of-compression. The cooled supercharging air or fuel/air charge, depending on the point it is injected into the compression stroke, also has a low "effective" compression ratio and combined with the cool initial charge, produces very small heat-of-compression for very low peak temperatures and pressures. Compression continues and at combustion chamber **5**-A, near or at TDC, the charge is ignited causing the power, scavenging, compression and intake action of rotor **2**, thus providing great power, torque and efficiency with ultra low polluting emissions, completing a power cycle.

Operational Design 3: In Design 3, the air intake port **3N** has been elongated and is now port **3E** (solid line) of FIG. **24**. The port **3**-E is significantly elongated so that when the rotor **2** passes the port, it begins to draw the air or fuel-air charge into the compression chamber **5**-C at a later point in its travel, thus pulling in significantly less charge than that received by normal epitrochoid rotary engines. Hence, it produces a low, subnormal effective compression ratio, which in this Design results in an extended expansion ratio.

Now, the rotation of rotor **2** pulls in a light air or fuel-air charge and during the compression process, which begins

when intake port **3E** of FIG. **24** is closed by a trailing lobe of rotor **2** of FIG. **24**, an externally pre-compressed, cooled air or fuel/air charge is injected by valve **9**, through inlet port **4'** or port **4**, which is optionally an expansion valve **9'** Compression continues and when the combustion chamber **5-A** is at TDC, the charge is ignited, causing rotor **2** to rotate producing great power and torque to the drive shaft, producing higher efficiency with ultra low polluting emissions. This Design is also selectively supercharged to any desired level even though the effective compression ratio is very low.

The inlet port **3N** of FIG. **24** is optionally constructed in such a manner that it is selectively variable in length. The port is alternatively made as long or even longer than that of **3E** as illustrated in FIG. **24**. And FIG. **24-B**. Alternatively, a sliding panel (dotted line **3N**, FIG. **24**) is so positioned behind port **3E** that it can be moved by a servo system, controlled by ECM-**27**. Thus the length can be manipulated selectively from a normal inlet port length, as **3N** of FIG. **24**, to any length of **3E** desired. This allows the "effective" compression ratio of the engine to be equal to the expansion ratio or it can be reduced to any desired compression ratio. The compression ratio can be varied infinitely and inversely to the expansion ratio. Port **3E** of FIG. **24** is an illustration of the means of reducing the volume of primary air charge since the charge intake suction is delayed for low effective compression ratio for very low heat-of-compression and an extended expansion ratio. Also, the compression ratio is alternatively varied by fitting a variable control orifice control valve in outlet port **28** with proper activator, controlled preferably by ECN-**27** of FIG. **2**. By using normal intake port **3N** and by opening outlet valve **28** and varying the percentage of fresh charge pumped in by rotor **2** which is expelled through port **28**, the compression ratio can be varied from normal (compression ratio equal to the expansion ratio) to an effective compression for that portion of charge as low as 2:1 or 3:1. Then the very dense supercharging air, having a similar effective compression ratio, produces very low heat-of-compression with an expansion ratio which is extended inversely to the effective compression ratio.

Because of the cool or chilled air charge, the compression ratio can be varied from as much as 40:1 or higher to an effective compression ratio of 3:1 or 2:1 with the expansion ratio being inversely extended.

Operational Design 4: Design 4 describes another means of charging the engine and combustion chamber **5-A**. Whereby inlet port **3** can be normal (3N) or elongated (3E), but using port **3N**, the initial intake charge is pulled in and then during the majority of the compression process, is pumped out through an ancillary outlet valve **28**. If mixed with fuel, the charge, which is expelled, is conducted from conduit **28** to the suction side of either compressor **14** or compressor **16** of FIG. **24**, preventing the pollution of the air or the wasting of fuel. Optionally, a bypass valve R_1 and conduit X_1 are used to partly bypass compressor **16** and a similar bypass system, R_2 and X_2, together allow control of charge pressures and temperatures, preferably controlled by ECM-**27** of FIG. **2**, making spark, compression ignition or HCCI operation feasible for all fuels, including diesel.

In any Operational Design, the dense, cooled or chilled supercharged air is alternatively injected directly into the combustion chamber as depicted in FIGS. **24-B** and **25-B** where conduit **11** and injector valve **9"** inject the air or fuel-air directly into combustion chamber **5-A**. In this case, combustion chamber **5-A** already contains the residual low effective compression effective ratio air or fuel-air charge, thus producing a doubly cool initial combustion process.

As most of the initial charge is expelled and ancillary port **28** is closed, preferably by rotor **2**, inlet valve **9** (optionally, an expansion valve **9'**) opens and injects the pre-compressed cooled or chilled air or fuel/air charge into the compression process above the combustion chamber as it swings into TDC position to be sealed and ignited. Now, the charge is ignited by spark or HCCI, thereby depressing the rotor into the power, scavenging, intake and compression processes to complete a power cycle.

In this system, the pumping through an initial air or fuel-air charge is helpful in cooling the combustion chamber **5-A**, making the task of controlling charge temperatures simpler, especially in HCCI engine operations.

The supplemental charge injection in this system is cold and has an "effective compression ratio of perhaps 2:1 to zero and being the entire working charge, is very adequate in density to provide superior power and torque with ultra low emissions.

Referring now to FIG. **24-B**, there is shown a schematic illustration of the engine of FIG. **24**, to show the combustion chamber **5-A** in firing position and the optional methods of inducing air charges through ports **3E** (charge B) and **4** (charge A) respectively for any Operational Design, the latter injected from conduit **11**, combined and now in the combustion chamber **5-A**. And also depicting the heavy unburned hydrocarbons **18** being moved to the outer side of the exhaust port **6** by centrifugal force and how they are sent along with the fresh charge to pass again through combustion chamber and ignition. In addition, FIG. **24-B** shows an alternative scheme for injecting the supercharging air through conduit **11** into the primary charge in the combustion chamber **5-A**. In this system, the secondary charge is injected directly by conduit **11** and valve **9"** into combustion chamber **5-A** of FIG. **24-B** as combustion chamber **5-A** rotates into TDC position.

Bypass system valve R_1 and conduit X_1 are optionally used to bypass wholly or partially compressor **16** or to through-put the entire charge. A similar bypass system, valve R_2 and X_2 offer optional through-put of charge or to wholly or partially bypass charge going through intercooler **17**. Thus, charge pressure, temperature and density may be closely controlled by a control unit such as ECM-**27** of FIG. **2**. With ECM-**27** monitoring temperatures and pressures in combustion chambers and adjusting all activator systems to the optimum for the ignition system used, allows spark ignition, compression ignition or HCCI operation for all fuels including diesel oils.

As described earlier and depicted in FIG. **24-B** and FIG. **25-B**, the supplementary charge is alternatively injected directly into combustion chamber **5-A** by diverting or channeling conduit **11**, carrying the cool dense supplementary charge to go directly to the chamber **5-A**, being injected by valve **9"**, which is alternatively is an expansion valve after the order described for FIG. **2-B** or FIG. **2-C**.

As described heretofore, in this system, the homogenized diesel fuel/air mixture temperature is kept below auto-ignition temperatures until combustion chamber TDC position and is then ignited by spark or HCCI.

By keeping the charge temperature below the temperature[2] which will cause auto-ignition of diesel-air mixture (normally about 8:1 compression ratio), the increased density of the charge permits spark ignition with much increased power.

[2] The auto-ignition temperature of diesel fuel/air mixtures in current engines is that produced at about 8:1 compression ratio. The engines of the present invention, rotary or reciprocating design keeps the mixture temperature below that point until the point that ignition is desired.

In any of the Designs of the epitrochoid rotary (Wankel) type of FIGS. **24–25**-B or the straight rotary engines of FIGS. **26–32**, the supplementary and selectively supercharging air or fuel/air charge is optionally injected through inlet valve **9** which alternatively is an expansion valve **9'** injecting compression "chilled" charge whose system provides an even cooler working cycle. Expansion valve **9'** is discussed as expansion valve **10** in great detail, both means and methods in FIGS. **2**-B, **2**-C, **2**-D, **6–10**, **11**-B, **18**-B, **19**-C and **19**-D. The improvements of the new working cycle of the engines of FIGS. **24–32** is discussed in detail under the description of engine of FIG. **2** and includes:

Results

1) Low peak temperatures and pressures.
2) A denser charge.
3) Greater efficiency.
4) Greater power and torque.
5) Improved engine durability.

Advantages

1) Lower polluting emissions.
2) Increased vehicle range.
3) Longer engine life.
4) Greater reliability.
5) Lower RPM. (Due to greater torque, the engine of this invention will develop power and torque at one-half of the RPM of current technology epitrochoid rotary engines).

Supercharge density is selectively much greater than that of state-of-art engines, providing greater power and torque with increased efficiency while producing ultra low polluting emissions.

Referring now to FIG. **25**, there is shown a perspective view (with portions in cross-section and schematically), a epitrochoid (Wankel) type rotary internal combustion engine operating in a variant system, different from the Wankel engine and the engine of FIG. **24**. Optionally, the air or fuel-air charge is doubly compressed and cooled and with a much smaller than normal compression chamber **5**-A, produces a significantly denser charge.

Operation

Epitrochoid engine **1** receives into compression chamber a normal or pressure boosted air or fuel-air charge through the normal size inlet port **3**N. As soon as the charge is pulled in by rotor **2**, port **3**N is closed by rotation of trailing lobe of the rotor **2** and compression of charge begins.

Ancillary valve **13** is opened by pressure differential and allows the charge being compressed to exit and pass through conduit **7**, intercooler **8**, compressor **9**, intercooler **19** (items **9** and **19** optional) and conduit **11** to return to inlet valve **14** and port **4** or to conduit **11"** and valve **9"** of FIG. **25**-B. Inlet valve **14** remains closed until proper engine operating pressure has built in cooling compressing system **13** to **14**. Compression continues on the small charge remaining in combustion chamber **5** after outlet port **13** is passed by rotor **2** and optionally with valve in port **13** closed. As soon as operating pressure has built in compressed cooling system **13-4**, inlet valve **14** (which is optionally an expansion valve **10** in FIG. **2**-B) injects the doubly compressed and cooled air or fuel-air charge into the compression chamber **5**-C, adding this denser portion late to that charge remaining in the compression chamber **5**-C, as soon as valve **13** is closed or passed by rotor **2**, or at any time later, optionally even during combustion. (The latter case requires the charge to be injected into combustion chamber **5**-A. Any of the ports of **4***a*–**14** are optionally constructed through wall of stator **1** or through end plate **18** of stator **1**).

Alternatively, compressor **9** and intercooler **19** may be eliminated and the primary simply cooled and reinjected into compression chamber **5**-C or into combustion chamber **5**-A through valve **9"** of FIG. **25**-B.

At the usual point that the current epitrochoid rotary engine is ignited (TDC), the charge is ignited by spark or HCCI. Because of the charge density and temperature control possible, the engine of this invention can be fueled by diesel-air mix and is ignited alternatively by spark or HCCI. HCCI is feasible due to the possibility of keeping the density up and the charge temperature under control by ECM-**27** (see HCCI systems in FIGS. **19–19**-D). For a denser charge, the inlet air is pressure boosted. Intercooler **19** is utilized or optionally partly bypassed through bypass system valve R and conduit X by which the charge temperature is adjusted and controlled preferably by ECM-**27**, FIG. **2**.

At ignition, the extremely dense and temperature adjusted charge expands into expansion chamber **5**-E turning the rotor and producing more power, torque and efficiency while reducing polluting emissions. Again, exhaust port **6**, being placed in the end-plate of the stator and at a proper distance from the periphery of the end-plate, allows any unburned liquid fuel to be centrifuged along the outer edge of end-plate **19**, FIG. **25**-B and past exhaust port **6** to pass along with the fresh charge through combustion again to further reduce HC emissions.

In the engine of FIG. **25**, the effective compression ratio is greatly reduced, producing an extended expansion ratio, but with normal to heavier charge-weight.

Referring now to FIG. **25**-B, there is shown a perspective of the engine of FIG. **25**, showing alternate inlet ports for the doubly compressed and cooled charge air or fuel-air mix. The air inlet port **3**N is as in a normal epitrochoid rotary engine. Outlet port **13** to conduit **7** is placed near the end of rotor travel in compression chamber **5**-C. Inlet port **4**-C shows one choice with the charge leaving the chamber **5**-C through port **4**-C and conduit **7**. Port designated **4**-d provides a later point of ejection. Conduit **11** shows the conduit opening into port **4***a* in stator wall or alternatively, into port **4***b* (in phantom) before diminutive combustion chamber **5**-A is TDC and now blocked by rotor **2** being in firing position. An alternative point of introducing the doubly compressed charge is to have port **4***a* from conduit **11** lead to the combustion chamber **5**-A at the point that ignition is occurring.

The advantages of the engine of FIG. **25** and FIG. **25**-B are the same as those of FIG. **24** engine, but producing somewhat less power.

Referring now to FIG. **26**, there is shown in perspective and cut-away view of a rotary internal combustion engine in which vanes **4** in compressing and expanding, rotate on a central axis. Illustrated in this figure is the complete engine with the principal components shown. The engine is comprised of FIGS. **26**, **27**, **28** and **29** which will be described in detail as well as will the method.

There is shown engine housing **1**, compressor rotor **2**, expander rotor **2**-B, vanes **4**, vane seals **24**, vane guide rollers or "trucks," **3**, compressor stator **8**, expander stator **9**, combustion chamber **5**, exhaust port **17**, main bearing **6**, drive shaft **7**. Other principal components are illustrated and disclosed in FIGS. **27**, **28** and **29**.

Referring now to FIG. **27**, there is shown in a cross-section and a partially schematic view of the compressor section of the rotary internal combustion engine of FIG. **26**. The important components are compression chamber **5**-C, stator **8**, rotor **2**-A, central shaft **7**, vanes **4**, vane seals **10**, vane guide rollers **3**, air intake port **11**, compression ratio adjustment port **12**, valve for compression ratio adjustment

conduit, compression ratio adjustment conduit **13**, air intake port **3**-B, vane loading springs **23**, exhaust conduit **18** from **18** of FIG. **28**, turbocharger **15**, air intake **16**, carburetor **51**-C, intercooler **17**, compressor **18**, intercooler **19**, intercooler bypass system valve R_1, conduit X_1, compressor bypass system valve R_2 conduit X_2, intercooler bypass system valve R_3 conduit X_3, conduit **20**, injection valve (optionally an expansion valve **21**), supercharging air injection port **22**, outlet port **14**-A, leading to optional valve **14**-B in FIG. **28**, leading to combustion chamber **5**-A and port **14**-C, leading to combustion chamber **5'** in rotor **2**-B.

Referring now to FIG. **28**, there is shown a cross-section of the expansion rotor assembly of the rotary internal combustion engine of FIG. **26**. The principal components are intake valve **14**-B receiving air or fuel/air charge from port **14**-A in FIG. **27**, spark plug **12**, optional spark plug **12**A, rotor combustion chamber **5'**, alternative combustion chamber **5**-B, rotor **2**-B, vanes **4**, alternative vanes **4**-B, vane seals **10**, vane guide rollers **3**, vane loading springs **23**, exhaust port **17** and exhaust conduit **18** (goes to conduit **18** of FIG. **27**).

Method of Operation

Compressor section of FIG. **27** receives charge air or fuel-air charge from two sources 1) Port **3**-B and conduit **11** receives primary air or fuel/air mix at atmospheric or boosted pressure. 2) A secondary supercharging charge portion of air is inducted through a compressor in this figure, a turbo-charger **15**, which receives atmospheric air through port **16** which is optionally mixed with fuel which is optionally carbureted by **15**-C. The supercharging air or fuel-air charge taken in and compressed by compressor **15** now passes through a conduit to intercooler **17**. Then after cooling, it is received and highly compressed by compressor **18** and then conveyed to intercooler **19** to conduit **20** and to high pressure valve **21** and to intake port **22**, to be injected by intake valve **21** into the primary air charge while it is being compressed. Intake valve **21** is alternatively an expansion valve such as valve **10** of FIG. **2**-B.

Now, the primary air intake port **3**-B is fitted with an adjustable volume air return which is used to adjust the compression ratio of the engine from normal (equal to the compression ratio) to a compression ratio which is less than the expansion ratio. The purpose of this system is to selectively and alternatively adjust valve **14** to allow conduit **13** to return some part of the air or fuel-air charge back into suction port **3**-B as rotary rotor vanes **4** pull in atmospheric pressure or pressure boosted air. This, when used, further reduces the "effective" compression ratio for the primary charge.

As vanes **4** rotate, compression of the primary charge begins at inlet conduit **11** of port **3**-B, if valve **14** is closed. If valve **14** is open at all, the "effective" compression ratio of this initial portion of charge is low which creates small heat-of-compression for this primary charge. (The number of vanes **4** in compression rotor **2**-A would be of any magnitude above one and would probably be three or four in number).

Rotor **2**-A continues the compression process toward high pressure intake valve **21**, which is alternatively an expansion valve on the order of valve **10** of FIG. **2**-B engine. As a vane **4** approaches port **22** and at the appropriate moment before vane **4** passes port **22**, intake valve **21** injects the very dense, cooled or optionally "chilled" air or fuel-air "supercharge" into the compression chamber **5**-C, bounded on the backside by a vane **4** and which charge is rotatably compressed and expelled out port **14**-A, which is optionally closed by valve **14**-B between port **14**-A of FIG. **27** and combustion chamber **5**-A of FIG. **28**. The charge then goes through port **14**-C, FIG. **28**, which optionally constitutes a sliding valve between stator combustion recess **5**-A and rotor combustion chamber **5'**. In this case, combustion chamber **5**-A is charged and ignited as it rotates past port **14**-C.

Combustion System A: Now, in FIG. **28**, optional outlet valve **14**-B opens and closes at such a time that vane **4** seals the front side of combustion chamber **5'** and the back side of the combustion chamber **5'** is sealed by close proximity between stator **9** and rotor **2**-B. This is described in detail for FIG. **30**. The fuel-air charge is ignited by spark plug **12** for the power pulse while combustion chamber **5'** is open to plug **12**.

Combustion System B: As described for engine of FIG. **30**, compression chamber **5**-B accepts a charge as it rotates past port **14**-C. As back side of combustion chamber **5**-B is sealed by close proximity to rotor with back side of combustion chamber **5**-B, spark plug **12**-A ignites charge for power pulse. In System B, the charge is ignited, preferably by spark, the exploding gases now expand against leading vane **4** with the pressure contained on the back side by the closeness of the surface of stator **9** surface to the surface of the rotor **2**-B which can sealed by a sliding seal on rotor or stator. Therefore, the only expansion that can occur is against vane **4** as it extends as the space increases in expansion chamber **5**-E on the lead side. The volume of expansion space increases until vane **4** passes exhaust port **17** as the exhaust gases are expelled. The difference between compression ratios and the expansion ratio can be adjusted by changing the amount of air which is passes back from outlet port **12** to inlet port **3**-B of FIG. **27**. The engine of FIG. **26** always operates with equal compression and expansion ratios, except when valve **14** of FIG. **27** allows part of the primary charge to return to inlet port **3**-B.

The engine can be supercharged far beyond the density allowed by conventional engines while producing, with great turbulence, low peak temperatures and pressure, assuring very low polluting emissions.

The temperature and pressure to and in the combustion chamber **5'** and **5**-B can be adjusted by speed control of compressor **18**, FIG. **27**, the amount of charge sent through or bypassed coolers **17** and **19** and compressor **18**, selectively utilizing bypass systems of components, with R valves being controlled by ECM-**27**. Friction is reduced to near zero due to close tolerance rollers and guide grooves and extension springs. Vane tips, which are preferably only three per rotor, will not touch stator surfaces, traveling with two mils clearance. Vane seals **10** are alternatively used with very light rubbing friction. The system described eliminates problems with rubbing surfaces. The engine of FIG. **26** provides all of the advantages stated for the epitrochoid rotary engine of FIG. **24**.

Referring now to FIG. **29**, there is shown a perspective view of one of two stator side or end-plates **24** of the internal combustion rotary engine of FIG. **26**, showing vane guide roller guide track **8**, drive shaft opening **7** and bearing assembly **6**.

Referring now to FIG. **30**, there is shown a perspective view, with sections in cross-section and other sections schematically, of an internal combustion engine with rotor(s) rotating on a central axis having an elliptical stator and an elliptical path for vane tips which are guided to prevent rubbing against stator housing and which provide charge intake, compression, combustion and scavenging in a single rotor and stator for each power unit.

The engine takes in a primary fuel-air charge characterized by having a low "effective" compression ratio and low heat-of-compression for that portion of charge followed by the injection of a supplementary, supercharging air portion late in the compression stroke. The secondary charge, also having a low "effective" compression ratio for low heat-of-compression producing totally very low heat-of-compression.

Method of Operation

The engine **1** receives the air or fuel-air mix in two portions from two different sources and are introduced at different times.

1) For the supercharging air, a compressor **15** receives air through inlet port **16** and optionally mixes the air with fuel in carburetor **51**-C. The air or fuel-air charge is directed by conduit through intercooler **17**, through compressor **18**, intercooler **19**, conduit **20** to injection valve **21** which is alternatively an expansion valve such as **10** in FIGS. **2**-B and **2**-D. The secondary, supercharging air is highly compressed, cooled or "chilled" before injecting by valve **21** into the primary air stream late in the compression process of the primary air or fuel-air in compression chamber **5**-C. The late injection of the cool, high pressure, supercharging charge into the relatively cool primary charge assures great charge density, turbulence and efficiency for economical and enduring operation with ultra low polluting emissions.

2) For the primary air, atmospheric or pressure boosted air of fuel-air mix is drawn into compression chamber **5**-C by way of air inlet port **3**-B by suction action as vane **4** rotates past air inlet **3**-B. If valve **14** on air return **13** is closed, compression begins as soon as vane **4** passes inlet port **3**-B.

If valve **14** is slightly or somewhat open, part or all of the charge passed before vane **4** is returned to suction inlet of **3**-B, thus reducing the "effective" compression ratio even further than illustrated.

The compression chamber **5**-C of the elliptical stator **8** is illustrated as being of lower volume than that of the expansion chamber **5**-E, therefore, always producing an "effective" compression ratio lower than the expansion ratio. Alternatively, both compression chamber **5**-C volume and expansion chamber **5**-E volume are equal for equal compression and expansion ratios. Any variation of these two volumes are within the scope of the invention. Air return conduit **13** and adjustable valve **14** allow the selective choice of compression ratios on engines with equal volumes of the two chambers or any variation ad infinitum.

Combustion Systems

Preparation and presentation of the air or fuel-air charge to a combustion chamber is similar for two different combustion systems.

Combustion System A: The primary air charge is received and compression begins and continues as rotor **2** rotates preferably with the very low "effective" compression ratio described here for low heat-of-compression. During the compression process in chamber **5**-C, a vane **4**, in compressing its air charge, approaches inlet of **22** injector valve **21**, which is alternatively an expansion valve of type **10**, FIG. **2**-B or **2**-D. Valve **21** opens and injects through port **22** a dense, cooled or "chilled" supercharging air into the flow of the cool primary air or fuel-air charge, just before vane **4** passes. Compression continues and as vane **4** nears outlet port **23**, which is fitted with a valve **25** which optionally is a one-way valve. The entire charge, initial and supercharge

combined, is pressed through port **23** and valve **25** into combustion recess **5'**. (A seal **24** created by close proximity of rotor **2** and stator **8**, prevents compressed charge passing between rotor **2** and stator **8**, forcing it to pass into port **23** through valve **25**). As rotor motion continues, vane **4** rotates past stator recess **5'** and combustion chamber **5**-A in rotor **2** as the charge is ignited by spark plug **12**-A or HCCI while chamber **5**-A is open to chamber **5'**. The combustion chamber **5**-A, as it passes opening to combustion recess **5'** and is ignited, is sealed on its following side by seal **24**. The forward end of combustion**5**-A is sealed against pressure leak by the extending vane **4** and its optional vane seals **10**. The charge expands against vane **4** in chamber **5**-E, producing power, scavenging, air intake and compression of charge.

Combustion System B: An alternate method of introducing and igniting the fuel-air charge of engine of FIG. **30** is as follows: The chief difference in combustion system B is that the combustion chamber **5**-B (in phantom) in rotor **2** rotates past opening of combustion recess **5'** in stator **8** until the combustion chamber **5**-B is filled with charge and the back side sealed by proximity with rotor **2** (see FIG. **30**) and the charge is ignited by plug **12**-B.

Both air charges have been prepared and during the compression process, the primary air charge has been combined with the supercharging air and together have been made more dense and cool by the injection of the supercharging air. Together, they have been pumped through port **23** into combustion recess **5'**, ready for induction into combustion chamber **5**-B. The combustion chamber **5**-B of FIG. **30** (in phantom) in rotor **2**-B is immediately behind and opens on its leading end against vane **4**-B (also in phantom). Vane **4**-B rotates past combustion chamber opening **5'** which opens to face of rotor **2** and opening of combustion chamber **5**-B, to inject charge into **5**-B. In this system, spark plug **12**-A, combustion chamber **5**-A and vane **4** are replaced by their counterparts **12**-B, **5**-B and **4**-B or can function in conjunction with them if spaced equal distance apart. Chamber **5'** in stator **8** is open on the underside or has a port **5"** slideably in contact with the outer surface of rotor **2**, which with the underside of chamber **5'** being sealed by its proximity with rotor **2**, injects fuel-air charge into combustion chamber **5**-B as in rotating vane **4**-B passes port **5"** to chamber **5'** which opens to combustion chamber **5**-B to inject charge from port of chamber **5'**. Now, in the alternate system B, combustion chamber **5**-B has passed the opening to chamber **5'** with the following end of combustion chamber **5**-B being sealed by close proximity of stator **8** inter surface and rotor **2** top surface, just after closure of chamber **5**-B by stator **2**. The leading end of combustion chamber **5**-B is sealed by further extension of vane **4**-B. At the point where the back-side of chamber **5**-B is sealed by the proximity of stator inter facing, the fuel-air charge is ignited by spark plug **12**-B, producing the power surge by providing pressure against vane **4**-B which has a larger surface area than the back side of combustion chamber **5**-B and is movable. Rotor **2** rotates with vane(s) **4**-B extending further into expansion chamber **5**-E, providing optionally an extended expansion ratio.

Method of Operation

Air is received by engine of FIG. **30** from two sources and put into the engine combustion chamber at two different times and at two different pressure levels and temperatures.

The primary charge enters compression chamber **5**-C of stator **8** at inlet port **3**-B as vane **4**-B rotates by inlet port **3**-B,

drawing in air or fuel-air charge. If valve **14** in conduit **13** is open, even partly, some or all of the air pumped to that point is returned to inlet port **3**-B, further reducing the "effective" compression ratio of the engine, which when ignited, expands the charge to a larger than normal volume, producing an extended expansion ratio. The compression chamber **5**-C can be smaller than the expansion chamber as shown in FIG. **30** or the two chambers can optionally be equal in volume or the compression chamber **5**-C may be of larger volume. The first situation producing an expansion ratio greater than the compression ratio and with the equal volume chambers producing equal compression and expansion ratios, excepting that with equal or larger volume compression chamber **5**-C, if valve **14** is wholly or partly open, the compression chamber will selectively produce an "effective" compression ratio less than the expansion ratio for an extended expansion ratio.

(The "effective" compression ratio is derived by dividing the volume of the expansion chamber by the volume of charge that produces heat during compression. That is, the volume of the compressing charge at the point where it begins to be compressed (producing heat), divided into the volume of the expansion chambers).

The preferably low compression air or fuel-air charge is being compressed in compression chamber **5**-C. Some time during the compression process, preferably late, at a point before vane **4**-B passes supercharge inlet port **22**, a very dense, cooled or chilled air or fuel-air charge is injected into the compression chamber **5**-C ahead of vane **4**-B. Compression continues and the entire charge is compressed into port **23** through optional valve **25**. Adjacent surfaces of rotor **2** and stator **8** are sealed against gas pressure at point **24** to just past port to to combustion recess **5'** and combustion chamber **5**-B, which follows adjacent to vane **4**-B, is filled with high pressure charge as rotor turns. In combustion system A, a one way valve **25** at channel **23** allows the charge to be ignited at the point the back side of combustion chamber **5**-A is sealed at point **24** by proximity of stator and rotor surfaces. The leading side of combustion chamber **5**-A is always sealed by extension of vane **4**. In combustion system B, the one way valve in channel **23** is optionally eliminated, allowing vane **4**-B to rotate past combustion recess **5'** outlet **5"** and combustion chamber **5**-B to be filled and the charge ignited as soon as back-side of combustion chamber **5**-B is sealed by stator **8** and rotor **2** inner surfaces meeting. The charge in system B is now expanding against the larger and less resistant surface vane **4**-B for the power pulse.

In system A or B, the rotor is now rotating with vanes **4**, or **4**-B, extending further into compression chamber **5**-E. Then at near the point the vanes are completely retracted, the stator **8** and vanes **4** come together with rotor **2** and scavenge the power chamber of exhausted fuel-air charge through port **17** and conduit **18**. The exhaust is now preferably ducted by exhaust conduit **18** to drive turbine on turbo-charger **15** which pumps air into the engine's supercharging system.

The total charge is now more dense than that of current engines, and with low"effective" compression ratios for both portions of charge is much cooler, producing greater power and torque and efficiency with ultra low polluting emissions.

The supercharging portion of air may be "compression chilled" by expanding through an expansion valve **10** as described for engines of FIG. **2**-B and FIG. **2**-C. This further reduces polluting emissions and increases power.

In all Designs, the first stage of compression of the supercharging air is followed by (a) air intercooler with optional bypass system consisting of a valve R and conduit X and (b) another compressor with its optional bypass system and (c) another intercooler with its optional bypass system. These are followed by a conduit **20** to convey the now dense and cool supercharging air or fuel-air charge to an injector valve **21** which injects the supercharging air through port **22** into the cool primary air charge during the compression process.

Control valves R and injector valves **21** or **10** in all Designs are alternatively operated and controlled by signals received by ECM-**27**, FIG. **2** which then adjust valve controls to produce charge density and temperatures to that required for spark ignition or HCCI operation.

The value of the new working cycle of the engine of FIG. **30** has been discussed under the description of the engine of FIG. **25** and **26** which produce the following results and advantages:

Results

1) Low peak temperatures and pressures.
2) A cool and much denser fuel-air charge.
3) Higher efficiency.
4) Greater torque.
5) Improved engine durability.

Advantages

1) Lower polluting emissions.
2) Increased vehicle range.
3) Longer engine life.
4) Greater reliability.
5) Lower RPM (due to increased torque)

The engine of this invention will selectively develop greater torque and power than engines of current technology while providing increased fuel efficiency and lower polluting emissions.

Referring now to FIG. **31**, there is shown a perspective view, with portions in cross-section and others schematically, of an air injected rotary engine in which a rotor **2** rotates on a central axis, having an elliptical stator **8** and an elliptical path for the vane **4** tips to follow. Vane tips **4** are chastened by track **6**, FIG. **32** which guides the vane tips within 2–3 mils of the stator's inner surface, thus preventing any "rubbing" friction in the engine. As in engine of FIG. **30**, vane seals are lightly spring loaded.The engine operates much in the fashion of engine of FIG. **30** in that an adjustable compression ratio system provides variation in volume of the compression chamber **5**-C as compared to the volume of the expansion chamber **5**-E, whether or not volumes of compression chamber **5**-C and expansion chamber **5**-E are equal, which volume ratios are optional.

Doubly Compressed—Doubly Cooled

The chief difference in the engine construction operation from engine of FIG. **30** is that only one source of air **3**-B is provided and the first stage of compression is accomplished in the engine compression chamber. In this engine, the compression chamber **5**-C is preferably the same volume or even greater than that of the expansion chamber **5**-E with port **14"** and valve **14** with conduit **13** selectively varying the "effective" compression ratio in regard to power, torque, efficiency and emissions characteristics demands of the engine, all preferably controlled by ECM-**27** as described for engine of FIG. **2**. The expansion of this engine can be selectively varied from less than the compression ratio to much greater than the effective compression ratio.

The engine is alternatively supercharged by pre-compressing the air entering inlet port **3**-B or by constructing the compression chamber with a much larger volume than that of the expansion chamber. Thus, the engine is

supercharged while operating with valve **14** closed. If the port **14'** is at a point of equal volume fully open, the compression ratio and expansion ratio would be equal. If volume of compression chamber **5**-C is higher and outlet port **14'** is higher, opening valve **14**, more or less, variably or selectively, produces equal compression and expansion ratios or a low "effective" compression ratio with extended expansion ratio.

In an alternate design, compressor **18** and intercooler **19** are eliminated and the charge, compressed in a single stage, is directed as shown after intercooling to compression recess through inlet valve **23'** or by way of conduit **20'** (in phantom) tp compression chamber **5**-C where the charge, now cooled, will be recompressed, perhaps with effective compression ratio of 2:1 or 3:1. The entire charge is then compressed into combustion recess **5'** by way of port **23"**, also in phantom. The charge is then introduced into combustion chamber **5**-A or **5**-B, according to instructions for combustion systems A or B for engines of FIG. **30** and FIG. **31**.

Operation

Air or fuel-air charge is taken in at port **3**-B by suction of vane **4** on rotor **2** as the vane is rotated past port **3**-B. The "effective" compression ratio is selectively chosen by (a) the volume of the compression chamber **5**-C in regard to the need and the volume of the expansion chamber **5**-E, by (b) the point where port **14'** is placed in the compression chamber or by (c) whether valve **14** is open and to what extent.

If valve **14** is closed, compression begins as soon as vane **4** passes port **3**-B. If port **14** is open, compression begins after that point, and depending on how much charge is returned, compression continues and the entire charge is compressed into outlet and optional valve **21** to conduit **16**, which in turn conveys the charge to intercooler **17**, compressor **18**, intercooler **19**, by conduit **20** to air injector valve **22**, and the entire charge now being doubly compressed and intercooled is injected into recess **5'** for induction into combustion chamber **5**-A or **5**-B and ignited as described for alternate combustion systems A and B of engine of FIG. **30**.

Also in this system, bypass valves R_1, R_2 and R_3 with conduits X_1, X_2 and X_3 are in the manner of valves **3**, **4**, **5** and **6** of engine of FIG. **2**, controlled by ECM-**27** to produce optimum temperature at the point of charge ignition for spark ignition or HCCI operation.

In any engine of this invention, fuel is optionally carbureted or injected at any point feasible. After the air or fuel-air has been introduced into chamber **5'**, the operation of the engine of FIG. **31** is the same as that of engine of FIG. **30**, utilizing alternate combustion system A or system B with components spark plug **12**-A, combustion chamber **5**-A and vane **4** being replaced by counter parts spark plug **12**-B, combustion chamber **5**-B and vane **4**-B. The two systems can be in conjunction with each other if spaced properly.

In operating in system A in both FIGS. **30** and **31**, valve **23**, which is optionally one-way, prevents charge back-flow or backfiring at the time charge ignition. Combustion chamber **5**-A and vane **4** are in the position shown and with combustion chamber **5**-A filled, the charge is ignited for the power surge, which also scavenges the chamber, induces and compresses a new charge which is pressed into chamber **5'**.

In alternate system B, operation in engine of FIGS. **30** and **31**, the charge is introduced into combustion chamber **5**-B as it passes bottom port of chamber **5'** and as shown with backside of combustion chamber **5**-B, sealed by proximity of stator and rotor interfaces and with vane **4**-B, by extension sealing the leading side of combustion chamber **5**-B, the charge is ignited by spark plug **12**-B for the power surge, producing three power surges per revolution and is scavenged, receives fresh air charge, compresses charge and loads chamber **5'** for the next ignition.

In either combustion system, A or B, there is an alternate system for engine of FIG. **31** of introducing the charge from conduit **20** to combustion recess **5'**. Alternatively, conduit **20**, valve **23** and port **22** open into compression chamber **5**-C just after valve-port **21** and before port **23** in FIG. **30**. Now, optional port **23"** in engine of FIG. **31** conveys the air or fuel-air charge from compression chamber **5**-C into combustion recess **5'**. This is the same means of introducing the charge to recess **5'** as done in engine of FIG. **30**. Thus, the doubly compressed and intercooled charge is now further compressed for perhaps an effective compression ratio of 2:1 or 3:1.

The advantages of this engine are the same as those for engine of FIG. **30** with only a little less power than that of engine receiving the supercharging portion of air from the external source.

As described and depicted earlier for the engines of FIGS. **24**, **24**-B, **25** and **25**-B, the secondary or supplementary or doubly compressed air or fuel-air charge is alternatively as sole or supplementary charge, injected directly into the combustion chambers of engines of FIGS. **24**, **25**, **26**, **30** and **31** for all Operational Designs of the engines of this invention.

It will be seen by the foregoing description of a plurality of embodiment of the present invention, that the advantages sought from the present invention are common to all embodiments.

While there have been herein described approved embodiments of this invention, it will be understood that many and various changes and modifications in form, arrangement of parts and details of construction thereof may be made without departing from the spirit of the invention and that all such changes and modifications as fall within the scope of the appended claims are contemplated as a part of this invention.

While the embodiments of the present invention which have been disclosed herein are the preferred forms, other embodiments of the present invention will suggest themselves to persons skilled in the art in view of this disclosure. Therefore, it will be understood that variations and modifications can be effected within the spirit and scope of the invention and that the scope of the present invention should only be limited by the claims below. Furthermore, the equivalents of all means-or-step-plus-function elements in the claims below are intended to include any structure, material or acts for performing the functions as specifically claimed and as would be understood by persons skilled in the art of this disclosure, without suggesting that any of the structure, material or acts are more obvious by virtue of their association with other elements.

What is claimed is:

1. A method of operating an internal combustion engine having a crankshaft driven by at least one piston moving through at least a compression stroke and an expansion stroke aided by combustion taking place within a cylinder, said method comprising the steps of

introducing air through a first port into a cylinder;

closing the first port at a point selected from the group consisting of a point prior to the beginning of the compression stroke and a point after the compression stroke has begun, thereby capturing a first, light air

charge in the cylinder and thereby defining an effective compression ratio lower than or equal to the expansion ratio;

compressing air outside the cylinder;

cooling the compressed air outside the cylinder; and

introducing the cooled, compressed air through a second port into the cylinder at some point after compression has begun,

wherein the second port is open only while the first port is closed.

2. The method of claim **1**, further comprising the step of:

varying the point-in-time during travel of the piston at which the cooled, compressed air is introduced through the second port during at least two of the power cycles.

3. The method of claim **2**, wherein the step of varying the point-in-time includes the steps of:

introducing cooled, compressed air through the second port during a first of the plurality of power cycles when the piston is at a first point in its compression process; and

introducing cooled, compressed air through the second port during a second of the plurality of power cycles when the piston is at a second point in its compression process, the second point being closer to top-dead-center than the first point.

4. The method of claim **1**,

wherein the step of introducing air through a first port includes the step of introducing during each power cycle air through the first port into the cylinder;

wherein the step of introducing cooled, compressed air includes introducing during each power cycle cooled, compressed air through a second port into the cylinder, including the steps of varying the volume of the air introduced through the first port and varying the pressure at which the cooled, compressed air is introduced into the second port during at least two of the power cycles.

5. The method of claim **1**, further comprising the steps of:

expelling from the cylinder, during the compression stroke, at least a portion of any air in the cylinder;

after the expelling step, introducing the cooled, compressed air into the cylinder after compression has begun within the cylinder;

mixing the air charge with fuel; and

igniting the mixture near top dead center of the compression process.

6. The method of claim **5**, wherein the introducing step includes the step of introducing the cooled, compressed air at the end of the compression process.

7. The method of claim **5**, wherein the cylinder is devoid of air immediately before the cooled, compressed air is first introduced.

8. The method of claim **5**, wherein there is no appreciable pressure in the cylinder when the cooled, compressed air is first introduced.

9. The method of claim **5**, wherein the pressure in the cylinder is approximately ambient at the moment the cooled, compressed air is first introduced.

10. The method of claim **1**, wherein the second port is open only during the compression stroke.

11. The method claim **1**, wherein the second port is open during a compression stroke of the piston.

12. The method of claim **1**, wherein said second port opens during the compression stroke, including at the beginning of the compression stroke or at any time thereafter during the compression stroke.

13. The method of claim **1**, wherein said second port opens prior to the beginning of the compression stroke and closes after the compression stroke has begun.

14. The method of claim **1**,

wherein introducing the cooled, compressed air includes opening the second port and closing the second port; and

wherein the method further comprises varying the point in time during travel of the piston at which the second port is closed during at least two of the power cycles.

15. An internal combustion engine, comprising an engine block defining at least one cylinder therein, a first inlet port and a second inlet port communicating between said cylinder and a source of air, an exhaust port through which exhausted gases are expelled from said cylinder, a piston movably mounted within said cylinder, at least one compressor in fluid communication via a conduit between said source of air and at least said second port; said second port being open only while said first port is closed, said engine further comprising a cooler operatively connected between said second port and an outlet to said at least one compressor; and said engine being further characterized by a power cycle having an effective compression ratio lower than or equal to the expansion ratio and by the presence in the cylinder of a cool, dense, heavy air charge which charge was pre-compressed and pre-cooled outside the cylinder and was introduced into the cylinder at some point after the compression process has begun.

16. The engine of **15**, wherein said piston moves through at least an intake stroke and a compression stoke, said engine further comprising control mechanism selectively timed to close said first port prior to completion of the piston intake stroke.

17. The engine of claim **15**, wherein said piston moves through at least an intake stroke and a compression stoke, said engine further comprising control mechanism selectively timed to close said first port only after the compression stroke has begun.

18. The engine of claim **15**, further comprising means for directing low pressure air through said first port and into said cylinder and for directing air highly compressed by said at least one compressor through said second port and into said cylinder during a compression stroke of said piston.

19. The engine of claim **15**, wherein said second port is open only during a compression stroke of said piston.

20. The engine of claim **15**, wherein said second port is open only after compression has begun during a compression stroke of said piston.

21. The engine of claim **15**, wherein said second port opens during the compression stroke, including at the beginning of the compression stroke or at any time thereafter during the compression stroke.

22. The engine of claim **15**, wherein said piston moves through at least an intake stroke and a compression stroke, said engine further comprising control mechanism configured to selectively vary the point in time during travel of the piston at which the second port is closed during at least two of the power cycles.

23. A method of operating an internal combustion engine having a crankshaft driven by at least one piston moving through at least a compression stroke and an expansion stroke aided by combustion taking place within a cylinder, said method comprising the steps of

supplying air through a first port into a cylinder;

compressing air outside the cylinder;

cooling the compressed air outside the cylinder; and

supplying the cooled, compressed air through a second port into the cylinder,

wherein the second port is open only while the first port is closed and

wherein the step of supplying the cooled, compressed air includes the steps of opening the second port prior to the beginning of the compression stroke and closing the second port after the compression stroke has begun.

24. An internal combustion engine, comprising an engine block defining at least one cylinder therein, a first inlet port and a second inlet port communicating between said cylinder and a source of air, an exhaust port through which exhausted gases are expelled from said cylinder, a piston movably mounted within said cylinder, at least one compressor in fluid communication via a conduit between said source of air and at least said second port; said second port being open only while said first port is closed, said engine further comprising a cooler operatively connected between said second port and an outlet to said at least one compressor; and wherein said piston moves through at least an intake stroke and a compression stoke, said engine further comprising control mechanism selectively timed to close said first port at a point selected from the group consisting of a point prior to the completion of the piston intake stroke and a point after the compression stroke has begun.

25. An internal combustion engine, comprising an engine block defining at least one cylinder therein, a first inlet port and a second inlet port communicating between said cylinder and a source ol air, an exhaust port through which exhausted gases are expelled from said cylinder, a piston movably mounted within said cylinder, at least one compressor in fluid communication via a conduit between said source of air and at least said second port; said second port being open only while said first port is closed, said engine further comprising a cooler operatively connected between said second port and an outlet to said at least one compressor; and, wherein said second port is open during at least a portion of an intake stroke of the piston.

26. The engine of claim **25**, wherein said piston moves through at least an intake stroke and a compression stroke, said engine further comprising control mechanism selectively timed to open said second port during the intake stroke.

27. An internal combustion engine, comprising an engine block defining at least one chamber therein, a first inlet port and a second inlet port communicating between said chamber and a source of air, an exhaust port through which exhausted gases are expelled from said chamber, a piston movably mounted within said chamber, at least one compressor in fluid communication via a conduit between said source of air and at least said second port; said second port being open only while said first port is closed, said engine further comprising a cooler operatively connected between said second port and an outlet to said at least one compressor, wherein said chamber is defined by at least one chamber wall and by the piston, and wherein said first inlet port and said second inlet port communicate with said chamber through separate apertures formed in said chamber wall.

28. The engine of claim **27**, wherein said chamber wall includes at least a cylinder wall portion and a head wall portion, and said first inlet port communicates with said chamber through an aperture in said cylinder wall portion.

* * * * *

E-FILED
Thursday, 09 February, 2006 05:34:37 PM
Clerk, U.S. District Court, ILCD

PCT

WORLD INTELLECTUAL PROPERTY ORGANIZATION
International Bureau

INTERNATIONAL APPLICATION PUBLISHED UNDER THE PATENT COOPERATION TREATY (PCT)

(51) International Patent Classification 6 :
F02B 41/04, F02D 13/02, 23/00

A1

(11) International Publication Number: **WO 98/02653**

(43) International Publication Date: 22 January 1998 (22.01.98)

(21) International Application Number: PCT/US97/09072

(22) International Filing Date: 23 May 1997 (23.05.97)

(30) Priority Data:

60/022,102	17 July 1996 (17.07.96)	US
60/023,460	6 August 1996 (06.08.96)	US
60/029,260	25 October 1996 (25.10.96)	US
60/040,630	7 March 1997 (07.03.97)	US

(71)(72) Applicant and Inventor: BRYANT, Clyde, C. [US/US]; 410 Trammell Drive, Alpharetta, GA 30201 (US).

(74) Agents: ISAF, Louis, T. et al.; P.O. Box 720601, Atlanta, GA 30358-2601 (US).

(81) Designated States: AL, AT (Utility model), AU, BB, BG, BR, CA, CN, CU, CZ, CZ (Utility model), DE (Utility model), DK (Utility model), EE, EE (Utility model), ES (Utility model), FI (Utility model), GE, HU, IL, IS, JP, KP, KR, LC, LK, LR, LT, LV, MG, MK, MN, MX, NO, NZ, PL, PT (Utility model), RO, RU (Utility model), SG, SI, SK, SK (Utility model), TJ (Utility model), TR, TT, UA, US, UZ, VN, ARIPO patent (GH, KE, LS, MW, SD, SZ, UG), Eurasian patent (AM, AZ, BY, KG, KZ, MD, RU, TJ, TM), European patent (AT, BE, CH, DE, DK, ES, FI, FR, GB, GR, IE, IT, LU, MC, NL, PT, SE), OAPI patent (BF, BJ, CF, CG, CI, CM, GA, GN, ML, MR, NE, SN, TD, TG).

Published

With international search report.

Before the expiration of the time limit for amending the claims and to be republished in the event of the receipt of amendments.

(54) Title: IMPROVED INTERNAL COMBUSTION ENGINE AND WORKING CYCLE

(57) Abstract

The invention is concerned with a method of deriving mechanical work from a combustion gas in internal combustion engines and reciprocating internal combustion engines (100) for carrying out the method. In its preferred embodiments, the method includes the steps of (i) producing an air charge, (ii) controlling the temperature, density and pressure of the air charge, (iii) transferring the air charge to a power cylinder (7) of the engine such that an air charge having a weight and density selected from a range of weight and density levels ranging from below atmospheric weight and density to heavier-than-atmospheric weight and density is introduced into the power cylinder, and (iv) then compressing the air charge at a lower-than-normal compression ration, (v) causing a predetermined quantity of charge-air and fuel to produce a combustible mixture, (vi) causing the mixture to be ignited within the power cylinder, and (vii) allowing the combustion gas to expand against a piston operable in the power cylinders with the expansion ratio of the power cylinders being substantially greater than the compression ratio of the power cylinders of the engine.

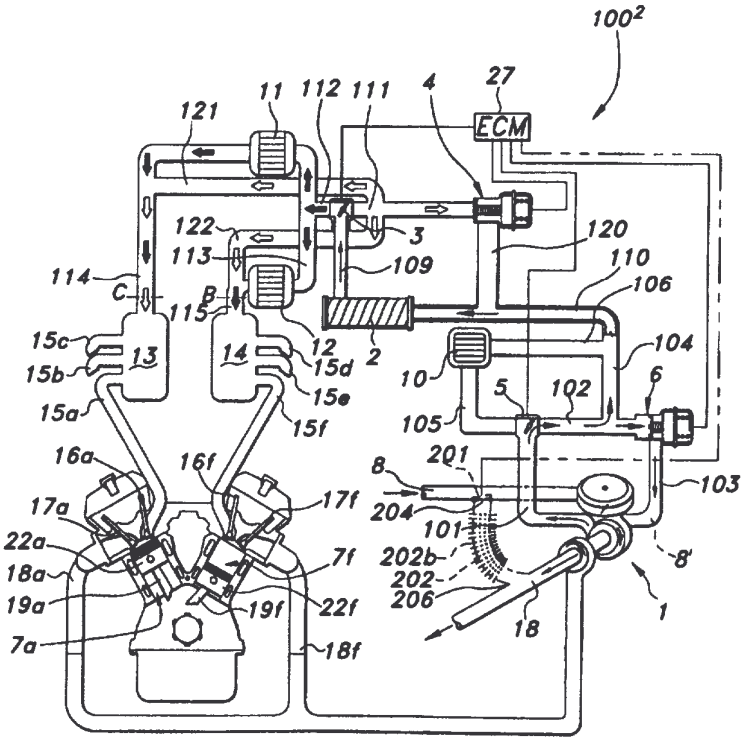

FOR THE PURPOSES OF INFORMATION ONLY

Codes used to identify States party to the PCT on the front pages of pamphlets publishing international applications under the PCT.

AL	Albania	ES	Spain	LS	Lesotho	SI	Slovenia
AM	Armenia	FI	Finland	LT	Lithuania	SK	Slovakia
AT	Austria	FR	France	LU	Luxembourg	SN	Senegal
AU	Australia	GA	Gabon	LV	Latvia	SZ	Swaziland
AZ	Azerbaijan	GB	United Kingdom	MC	Monaco	TD	Chad
BA	Bosnia and Herzegovina	GE	Georgia	MD	Republic of Moldova	TG	Togo
BB	Barbados	GH	Ghana	MG	Madagascar	TJ	Tajikistan
BE	Belgium	GN	Guinea	MK	The former Yugoslav Republic of Macedonia	TM	Turkmenistan
BF	Burkina Faso	GR	Greece			TR	Turkey
BG	Bulgaria	HU	Hungary	ML	Mali	TT	Trinidad and Tobago
BJ	Benin	IE	Ireland	MN	Mongolia	UA	Ukraine
BR	Brazil	IL	Israel	MR	Mauritania	UG	Uganda
BY	Belarus	IS	Iceland	MW	Malawi	US	United States of America
CA	Canada	IT	Italy	MX	Mexico	UZ	Uzbekistan
CF	Central African Republic	JP	Japan	NE	Niger	VN	Viet Nam
CG	Congo	KE	Kenya	NL	Netherlands	YU	Yugoslavia
CH	Switzerland	KG	Kyrgyzstan	NO	Norway	ZW	Zimbabwe
CI	Côte d'Ivoire	KP	Democratic People's Republic of Korea	NZ	New Zealand		
CM	Cameroon			PL	Poland		
CN	China	KR	Republic of Korea	PT	Portugal		
CU	Cuba	KZ	Kazakstan	RO	Romania		
CZ	Czech Republic	LC	Saint Lucia	RU	Russian Federation		
DE	Germany	LI	Liechtenstein	SD	Sudan		
DK	Denmark	LK	Sri Lanka	SE	Sweden		
EE	Estonia	LR	Liberia	SG	Singapore		

Improved Internal Combustion Engine and Working Cycle

This invention relates to a method of deriving mechanical work from combusting gas in an internal combustion engine by means of a new thermodynamic working cycle and to reciprocating internal combustion engines for carrying out the method.

Background of Invention

It is well known that as the expansion ratio of an internal combustion engine is increased, more energy is extracted from the combustion gases and converted to kinetic energy and the thermodynamic efficiency of the engine increases. It is further understood that increasing air charge density increases both power and fuel economy due to further thermodynamic improvements. The objectives for an efficient engine are to provide a high-density charge, begin combustion at maximum density and then expand the gases as far as possible against a piston.

Conventional engines have the same compression and expansion ratios, the former being limited in spark-ignited engines by the octane rating of the fuel used. Furthermore, since in these engines the exploded gases can be expanded only to the extent of the compression ratio of the engine, there is generally substantial heat and pressure in the exploding cylinder which is dumped into the atmosphere at the time the exhaust valve opens resulting in a waste of energy and producing unnecessarily high polluting emissions.

Many attempts have been made to reduce the compression ratio and to extend the expansion process in internal combustion engines to increase their thermodynamic efficiency, the most notable one being the "Miller" Cycle engine, developed in 1947.

Unlike a conventional 4-stroke cycle engine, where the compression ratio equals the expansion ratio in any given combustion cycle, the Miller Cycle engine is a variant, in that the parity is altered intentionally. The Miller Cycle uses an ancillary compressor to supply an air charge, introducing the charge on the intake stroke of the piston and then closing the intake valve before the piston reaches the end of the inlet stroke. From this point the gases in the cylinder are expanded to the maximum cylinder volume and then compressed from that point as in the normal cycle. The compression ratio is then established by the volume of the cylinder at the point that the inlet valve closed, being divided by the volume of the combustion chamber. On the compression stroke, no actual compression starts until the piston reaches the point the intake valve closed during the intake stroke, thus producing a lower-than-normal compression ratio. The expansion ratio is calculated by dividing the swept volume of the cylinder by the volume of the combustion chamber, resulting in a more-complete-expansion, since the expansion ratio is greater than the compression ratio of the engine.

In the 2-stroke engine the Miller Cycle holds the exhaust valve open through the first 20% or so of the compression stroke in order to reduce the compression ratio of the engine. In this case the expansion ratio is probably still lower than the compression ratio since the expansion ratio is never as large as the compression ratio in conventional 2-stroke engines.

The advantage of this cycle is the possibility of obtaining an efficiency higher than could be obtained with an expansion ratio equal to the compression ratio. The disadvantage is that the Miller Cycle has a mean effective pressure lower than the conventional arrangement with the same maximum pressure, but with no appreciable improvements in emissions characteristics.

The Miller Cycle is practical for engines that are not frequently operated at light-loads, because at light-load operation the mean cylinder pressure during the expansion stroke tends to be near to, or even lower than, the friction mean pressure. Under such circumstances the more-complete-expansion portion of the cycle may involve a net loss rather than a gain in efficiency.

This type of engine may be used to advantage where maximum cylinder pressure is limited by detonation or stress considerations and where a sacrifice of specific output is permissible in order to achieve the best possible fuel economy. The cycle is suitable only for engines that operate most of the time under conditions of high mechanical efficiency, that is, at relatively low piston speeds and near full load.

Summary of the Invention

Briefly described, the present invention comprises an internal combustion engine system (including methods and apparatuses) for managing combustion charge densities, temperatures, pressures and turbulence in order to produce a true

mastery within the power cylinder in order to increase fuel economy, power, and torque while minimizing polluting emissions. In its preferred embodiments, the method includes the steps of (i) producing an air charge, (ii) controlling the temperature, density and pressure of the air charge, (iii) transferring the air charge to a power cylinder of the engine such that an air charge having a weight and density selected from a range of weight and density levels ranging from atmospheric weight and density to a heavier-than-atmospheric weight and density is introduced into the power cylinder, and (iv) then compressing the air charge at a lower-than-normal compression ratio, (v) causing a pre-determined quantity of charge-air and fuel to produce a combustible mixture, (vi) causing the mixture to be ignited within the power cylinder, and (vii) allowing the combustion gas to expand against a piston operable in the power cylinder with the expansion ratio of the power cylinder being substantially greater than the compression ratio of the power cylinders of the engine. In addition to other advantages, the invented method is capable of producing mean effective [cylinder] pressures ("mep") in a range ranging from lower-than-normal to higher-than-normal. In the preferred embodiments, the mean effective cylinder pressure is selectively variable (and selectively varied) throughout the mentioned range during the operation of the engine. In an alternate embodiment related to constant speed-constant load operation, the mean effective cylinder pressure is selected from the range and the engine is configured, in accordance with the present invention, such that the mean effective cylinder pressure range is limited, being varied only in the amount required for producing the power, torque and speed of the duty cycle for which the engine is designed.

In its preferred embodiments, the apparatus of the present invention provides a reciprocating internal combustion engine with at least one ancillary compressor for compressing an air charge, an intercooler through which the compressed air can be directed for cooling, power cylinders in which the combustion gas is ignited and expanded, a piston operable in each power cylinder

and connected to a crankshaft by a connecting link for rotating the crankshaft in response to reciprocation of each piston, a transfer conduit communicating the compressor outlet to a control valve and to the intercooler, a transfer manifold communicating the intercooler with the power cylinders through which manifold the compressed charge is transferred to enter the power cylinders, an intake valve controlling admission of the compressed charge from the transfer manifold to said power cylinders, and an exhaust valve controlling discharge of the exhaust gases from said power cylinders. For the 4-stroke engine of this invention, the intake valves of the power cylinders are timed to operate such that charge air which is equal to or heavier than normal can be maintained within the transfer manifold when required and introduced into the power cylinder during the intake stroke with the intake valve closing at a point substantially before piston bottom dead center position or, alternatively, with the intake valve closing at some point during the compression stroke, to provide a low compression ratio. In some designs another intake valve can open and close quickly after the piston has reached the point the first intake valve closed in order to inject a temperature adjusted high pressure secondary air charge still at such a time that the compression ratio of the engine will be less than the expansion ratio, and so that ignition can commence at substantially maximum charge density. The 2-stroke engine of this invention differs in that the intake valves of the power cylinders are timed to operate such that an air charge is maintained within the transfer manifold and introduced into the power cylinder during the scavenging-compression (the 2nd) stroke at such a time that the power cylinder has been scavenged by low pressure air and the exhaust valve has closed, establishing that the compression ratio of the engine will be less than the expansion ratio of the power cylinders. Means are provided for causing fuel to be mixed with the air charge to produce a combustible gas, the combustion chambers of the power cylinders are sized with respect to the displaced volume of the power cylinder such that the exploded combustion gas can be expanded to a volume substantially greater than the compression ratio of the power cylinder of the engine.

The chief advantages of the present invention over existing internal combustion engines are that it provides a compression ratio lower than the expansion ratio of the engine, and provides, selectively, a mean effective cylinder pressure higher than the conventional engine arrangement with the same or lower maximum cylinder pressure than that of prior art engines.

This allows greater fuel economy, and production of greater power and torque at all RPM, with low polluting emissions. Because charge densities, temperatures and pressures are managed, light-load operation is practical even for extended periods, with no sacrifice of fuel economy. The new working cycle is applicable to 2-stroke or 4-stroke engines, both spark-ignited and compression-ignited. For spark-ignited engines the weight of the charge can be greatly increased without the usual problems of high peak temperatures and pressures with the usual attendant problem of combustion detonation and pre-ignition. For compression-ignited engines, the heavier, cooler, more turbulent charge provides low peak cylinder pressure for a given expansion ratio and allows richer, smoke-limited air-fuel ratio giving increased power with lower particulate and NO_x emissions. Compression work is reduced due to reduced heat transfer during the compression process. Engine durability is improved because of an overall cooler working cycle and a cooler than normal exhaust. It also provides a means of regenerative braking for storing energy for subsequent positive power cycles without compression work and for transient or "burst" power which further increases the overall efficiency of the engine.

All of the objects, features and advantages of the present invention cannot be briefly stated in this summary, but will be understood by reference to the following specifications and the accompanying drawings.

Brief Description of the Drawings

Embodiments of internal combustion engines according to the invention will now be described, by way of example, with reference to the accompanying drawings, in which:

Fig. 1 is a perspective view (with portions in cross-section) of the cylinder block and head of a six cylinder internal combustion engine operating in a 4-stroke cycle, and representing a first embodiment of the apparatus of the present invention from which a first method of operation can be performed and will be described. Among its other components, this embodiment is seen as having one ancillary compressor, a cooling system and valves to control charge pressures, density and temperature.

Fig. 2 is a schematic drawing of a six cylinder internal combustion engine, similar to the engine of Fig. 1, operating in a 4-stroke cycle, and representing a second embodiment of the apparatus of the present invention from which a second method of operation can be performed and will be described. Among its other components, this embodiment is seen as having two compressors, three intercoolers, four control valves, dual air paths for both the primary and the ancillary compressors, dual manifolds and showing a means of controlling charge-air pressures, density and temperatures.

Fig. 3 is a perspective view (with portions in cross-section) of the cylinder block and head of a six cylinder internal combustion engine operating in a 4-stroke cycle, and representing a third embodiment of the apparatus of the present invention from which a third method of operation can be performed and will be described.

Fig. 4 is a perspective view (with portions in cross-section) of the cylinder block and head of a six cylinder internal combustion engine operating in a 4-stroke cycle, and representing a fourth embodiment of the apparatus of the present invention from which a fourth method of operation can be performed and will be described. Among its other components, this embodiment is seen as having an ancillary compressor, with two charge-air intake ducts and dual intake air routes, one of which is low pressure and one which is high pressure, and both leading to the same power cylinder, a cooling system and valves for controlling charge-air pressures, density and temperature and an ancillary atmospheric air intake system.

Fig. 4-B is a perspective view (with portions in cross-section) of an engine similar to the engine of Fig. 4 with the exception that there is only one atmospheric air intake which supplies charge-air to the power cylinders at two different pressure levels.

Fig. 4-C is a schematic view of an exhaust and an air intake system of an engine showing a means of re-burning exhaust gases in order to reduce polluting emissions.

Fig. 5 is a perspective view (with portions in cross-section) of the cylinder block and head of a six cylinder internal combustion engine operating in a 4-stroke cycle, and representing a fifth embodiment of the apparatus of the present invention from which a fifth method of operation can be performed and will be described. Among its other components, this embodiment is seen as having one atmospheric air intake, an ancillary compressor with two charge-air routes, one of which is low pressure and which has two optional routes, and one which is high pressure, both leading to the same power cylinder, and control valving means and air coolers for varying charge densities, pressures and temperatures in the combustion chamber of the engine.

Fig. 6 is a part sectional view through one power cylinder of the 4-stroke engine of Fig. 4, Fig. 4-B, Fig. 5, Fig. 7 or Fig. 33 at the intake valves showing an alternative method (adaptable to other embodiments of the present invention) of preventing charge-air back flow and of automatically adjusting the charge pressure-ratio of the cylinder during the air charging process.

Fig. 7 is a schematic drawing of a six cylinder, 4-stroke engine representing yet another embodiment of the apparatus of the present invention, from which yet another method of operation can be performed and will be described, and depicting three alternative systems (two in phantom lines) of inducting a low pressure primary air charge. Among its other components, this embodiment is seen as having three air coolers and dual manifolds and the means of controlling the temperature, density and pressure of the charge by an engine control module and by valving variations.

Fig. 8 is a perspective view (with portions in cross-section) of the cylinder block and head of a six cylinder internal combustion engine, operating in a 2-stroke cycle, and representing a first 2-stroke embodiment of the apparatus of the present invention from which still another method of operation can be performed and will be described. Among its other components, this embodiment is seen as having a primary and an ancillary compressor, a cooling system and conduits and valves to adjust charge density, temperature and pressure according to the invention.

Fig. 9 is a perspective view (with portions in cross-section) of the cylinder block and head of a six cylinder internal combustion engine operating in a 2-stroke cycle, and representing a second 2-stroke embodiment of the apparatus of the present invention from which still another method of operation of can be performed and will be described. Among its other components, this embodiment

is seen as having one atmospheric air intake, a primary and an ancillary compressor, with two charge-air routes, one of which is low pressure which has alternate routes, and one of which is high pressure, and both leading to the same power cylinder, and control valving means and air coolers for varying charge densities, pressures and temperatures in the combustion chamber of the engine.

Fig. 9-B is a schematic drawing of a six cylinder, 2-stroke engine representing yet another embodiment of the apparatus of the present invention, from which yet another method of operation can be performed and will be described, and depicting two alternative systems (one in phantom lines) of inducting a low pressure primary air charge. Among its other components, this embodiment is seen as having three air coolers and dual manifolds and the means of controlling the temperature, density and pressure of the charge by an engine control module and by valving variations.

Fig. 10 is a part sectional view through one power cylinder of the 2-stroke engine of Fig. 9, at the intake valves, showing an alternative method (adaptable to other embodiments of the present invention) of preventing charge-air back flow during high pressure air charging and showing a pressure balanced valve having a pumped oil/air cooling system.

Fig. 11 is a perspective view (with portions in cross-section) of the cylinder block and head of a six cylinder internal combustion engine operating in a 2-stroke cycle, and representing a third 2-stroke embodiment of the apparatus of the present invention from which still another method of operation of can be performed and will be described. Among its other components, this embodiment is seen as having a primary and an ancillary compressor, a cooling system and conduits and valves to adjust charge density, temperature and pressure and having a single air intake runner for each power cylinder with at least two intake valves arranged in such a manner that one intake valve can operate with timing

independent of the other intake valve.

Fig. 12 is a pressure-volume diagram comparing the cycle of the engine of this invention with that of a high-speed diesel engine.

Fig. 13 is a chart showing improvements possible in the engine of this invention in effective compression ratios, peak temperatures and pressures, charge densities and expansion ratios, in comparison with a popular heavy-duty 2-stroke diesel engine.

Fig. 14 is a chart showing improvements possible in the engine of this invention in effective compression ratios, peak temperatures and pressures, charge densities and expansion ratios, in comparison with a popular heavy-duty, 4-stroke diesel engine.

Fig. 15 is a schematic drawing of suggested operating parameters for operation of the engines, both 2-stroke and 4-stroke, of Figs. 5-7 and Figs. 9-10 showing dual intercoolers for the main compressor, a single intercooler for a secondary compressor and a control system and valves for selecting different charge-air paths for light-load operations, and depicting (one in phantom lines) two alternative systems of inducting a low pressure primary air charge.

Fig. 16 shows suggested valve positions for supplying manifolds 13 and 14 with an air charge optimum for medium-load operation for the engines of Figs. 5-7 and Figs. 9-10. For medium-load operation the shutter valve 5 of compressor 2 would be closed and the air bypass valve 6 would be open to pass the air charge uncooled without compression to the intake of compressor 1 where closed shutter valve 3 and closed air bypass valve 4 directs the air charge now compressed by compressor 1 past the intercoolers to manifolds 13 and 14 with the air compressed and heated by compressor 1, for medium-load operation.

Fig. 17 shows a suggested scenario for providing the engines of Figs. 5-7 and Figs. 9-10 with a high density air charge for heavy duty, high power output operation. Fig. 17 shows all shutter valves 5 and 3 and all air bypass valves 6 and 4 closed completely so that the primary stage of compression is operative and a second stage of compression is operative and the entire air charge, with the exception of any going through conduit 32 to intake valve 16-B, is being passed through the intercoolers 10, 11 and 12 to produce a very high density air charge to manifolds 13 and 14 and to the engines power cylinders for heavy-load operation.

Fig. 18 shows a schematic drawing representing any of the engines of Fig. 3-Fig. 11, depicting an alternative type of auxiliary compressor 2' and a system of providing a means for disabling or cutting out the auxiliary compressor when high charge pressure and density is not needed. For relieving compressor 2' of work, shutter valve 5 is closed and air bypass valve is opened so that air pumped through compressor 2' can re-circulate through compressor 2' without requiring compression work.

Fig. 19 is a schematic drawing representing the engines shown in Figs. 5-7 and Figs. 9-10 and having two compressors, and one intercooler for one stage of compression, dual intercoolers for a second stage of compression, dual manifolds, four valves and an engine control module (ECM) and illustrating means of controlling charge-air density, pressure and temperature by varying directions and amounts of air flow through the various electronic or vacuum operated valves and their conduits.

Fig. 20 is a schematic drawing showing optional electric motor drive of the air compressors of the engines of Figs. 1 through Fig. 11.

Fig. 21 is a schematic transverse sectional view of a pre-combustion chamber, a combustion chamber and associated fuel inlet ducts and valving suggested for gaseous or liquid fuel operation for the engines of this invention or for any other internal combustion engine.

Fig. 22 is a part sectional view through one cylinder of an engine showing an alternate construction whereby there is supplied two firing strokes each revolution of the shaft for a 2-stroke engine and one firing stroke each revolution of the shaft for a 4-stroke engine, having a beam which pivots on its lower extremity, a connecting rod which is joined mid-point of the beam and is fitted to the crankshaft of the engine, and whereby a means is provided for varying the compression ratio of the engine at will.

Fig. 23 is a part sectional view through one cylinder of an engine showing an alternate construction whereby there is supplied two firing strokes each crankshaft revolution for a 2-stroke engine and one firing stroke each revolution of the shaft for a 4-stroke engine, and whereby the beam connecting the connecting rod and the piston pivots at a point between the piston and the piston connecting rod, which connecting rod is attached to the crankshaft of the engine, and an alternate preferred means of power take-off from the piston by a conventional piston rod, cross-head and connecting rod arrangement.

Fig. 24 is a part sectional view through one cylinder of an engine showing a means of providing extra burn-time each firing stroke in a 2-stroke or 4-stroke engine.

Fig. 25 is a perspective view of the cylinder block and head of a six cylinder internal combustion engine operating in a 2-stroke cycle and representing a yet another embodiment of the apparatus of the present invention from which still another method of operation of can be performed and will be described.

Among its other components, this embodiment is seen as having scavenging ports in the bottom of the piston sleeves and having a primary and an ancillary compressor, a cooling system, valves and conduits to control the pressure, density and temperature of the charge-air, and valves and conduits to supply scavenging air to the cylinders.

Fig. 26 is a schematic drawing of an engine similar to the engine of Fig. 25 showing one intercooler for one optional stage of compression, dual intercoolers for a primary compression stage and showing a control system (including engine control module (ECM) and valving) for controlling charge-air density, weight, temperature and pressure by controlling directions and amounts of air flow through the various valves, conduits and an optional throttle valve, and showing two optional routes for supplying scavenging air to the scavenging ports in the bottom of the cylinders, and alternative routes for the exhausted gases to exit the engine.

Fig. 27 through Fig. 30 are schematic drawings of the engine of Fig. 25 and Fig. 26 showing four alternate methods suggested for efficient scavenging of the engines, Fig. 27 and Fig. 28 also show a schematic drawing for an engine control module (ECM) and valving to control charge-air and scavenging air at a pressure, density and temperature deemed appropriate for each.

Fig. 31 is a schematic drawing showing suggested optional electric motor drive for the engine's air compressors.

Fig. 32 is a schematic drawing of the 2-stroke engine of Fig. 25 and Fig. 26, having only one compressor for supplying both charge-air and scavenging air, and showing a control system and means of controlling charge and scavenging air at a pressure, density and temperature deemed appropriate for each, and showing means of channeling the air through different paths for the same purpose;

Fig. 33 is a schematic transverse sectional view through a six cylinder engine having two compressor cylinders, four power cylinders, one supercharger, five regulatory valves, and showing an engine control module (ECM) for controlling charge temperatures, density and weight, and adopted for storage of compressed air compressed by regenerative braking, or for storage of bleed-air produced in some industrial processes, in any of the engines of this invention.

Fig. 34 is a schematic drawing representing any of the engines of the present invention and showing an alternate embodiment which includes a separate, electric-powered air compressor and, alternatively, an entrance conduit leading from a supply of waste or "bleed" compressed air for supplying charge-air to the engine (or to a plurality of engines), whereby the need for engine-powered compressors is eliminated.

Fig. 35 is a schematic drawing representing any of the engines of the present invention depicted in an alternate embodiment which is configured to operate as a constant load and constant speed engine. This constant load and constant speed engine embodiment of the present invention is shown as including both a primary and an ancillary compressor with optional intercoolers for providing two stages of pre-compressed charge-air, either optionally intercooled or adiabatically compressed.

Fig. 36 is a schematic drawing representing any of the engines of the present invention, and depicting a constant load and constant speed engine in accordance with an alternate embodiment of the present invention in which there is provided a single compressor with optional intercoolers for providing a single stage of pre-compressed charge-air, either optionally intercooled or adiabatically compressed.

Detailed Description of the Drawings

With reference now in greater detail to the drawings, a plurality of alternate, preferred embodiments of the apparatus of the Improved Internal Combustion Engine 100 of the present invention are depicted. Like components will be represented by like numerals throughout the several views; and, in some but not all circumstances, as the writer might deem necessary (due to the large number of embodiments), similar but alternate components will be represented by superscripted numerals (e.g., 100^1). When there are a plurality of similar components, the plurality is often times referenced herein (e.g., six cylinders 7a - 7f), even though fewer than all components are visible in the drawing. Also, components which are common among multiple cylinders are sometimes written with reference solely to the common numeral, for ease of drafting - e.g. piston 22a-22f => piston 22. In an effort to facilitate the understanding of the plurality of embodiments, (but not to limit the disclosure) some, but not all, sections of this Detailed Description are sub-titled to reference the system or sub-system detailed in the subject section.

The invented system of the present invention is, perhaps, best presented by reference to the method(s) of managing combustion charge densities, temperatures, pressures and turbulence; and the following description attempts to describe the preferred methods of the present invention by association with and in conjunction with apparatuses configured for and operated in accordance with the alternate, preferred methods.

Some, but not necessarily all, of the system components that are common to two or more of the herein depicted embodiments include a crankshaft 20, to which are mounted connecting rods 19a-19f, to each of which is mounted a piston 22a-22f; each piston traveling within a power cylinder 7a-7f; air being introduced into the cylinders through inlet ports controlled by intake valves 16, and air being

exhausted from the cylinders through exhaust ports controlled by exhaust valves 17. The interaction, modification and operation of these and such other components as are deemed necessary to an understanding of the various embodiments of the present invention are expressed below.

The engine 100^1 of Fig 1

Referring now to Fig. 1, there is shown a six cylinder reciprocating internal combustion engine 100^1 in which all of the cylinders 7a-7f (only one of which is shown in a sectional view) and associated pistons 22a-22f operate in a 4-stroke cycle and all power cylinders are used for producing power to a common crankshaft 20 via connecting rods 19a-19f, respectively. An ancillary compressor 2 (herein depicted as a Lysholm rotary compressor) selectably supplies air which has been compressed, or allows delivery of air therethrough at atmospheric pressure, to manifolds 13 and 14 and to cylinders 7a-7f, which cylinders operate in a 4-stroke cycle. Valves 3, 5 and 6 and intercoolers 10, 11 and 12 are used, in the preferred embodiments, to control air charge density, weight, temperature and pressure. The intake valves 16a-16f, 16a'-16f' are timed to control the compression ratio of the engine 100^1. The combustion chambers are sized to establish the expansion ratio of the engine.

The engines 100^1 - 100^5, 100^7 of Fig. 1, Fig. 2, Fig. 3, Fig. 4, Fig. 5, and Fig. 7, respectively, have camshafts 21 fitted with cams and are arranged to be driven at one-half the speed of the crankshaft in order to supply one power stroke for every two revolutions of the crankshaft, for each power piston. The rotary compressors 2 of Fig. 1, Fig. 2, Fig. 3, Fig. 4, Fig. 4-B, Fig. 5, Fig. 7 and Fig. 33 can be driven by a ribbed V-belt and would have a step-up gear between the V pulley and the compressor drive shaft, the rotary compressors could also be fitted with a variable-speed step-up gear as in some aircraft engines. The reciprocating compressor 1 of Fig. 3 is shown as having double-acting cylinders linked to the crankshaft 20 by a connecting rod 19g; and the crankshaft 20 to which it is linked

by connecting rod 19g would supply two working strokes for each revolution of the crankshaft 20. In one alternate approach, the reciprocating compressor 1 is driven by the connecting rod 19g being connected to a short crankshaft above the main crankshaft 20 to which the ancillary crankshaft (not shown) would be geared by a step-up gear in order to provide more than two working strokes per revolution of the main crankshaft 20. Alternatively, the compressor system can have multiple stages of compression for either rotary or reciprocating compressors. Whereas, the ancillary compressor 1 and second ancillary compressor 2 of the various embodiments are depicted throughout as a reciprocating compressor or a rotary compressor, it is noted that the invention is not limited by the type of compressor utilized for each; and the depicted compressors may be interchanged, or may be the same, or may be other types of compressors performing the functions described herein.

The engine 100^{1} shown in Fig. 1 is characterized by a more extensive expansion process, a low compression ratio and the capability of producing a combustion charge varying in weight from lighter-than-normal to heavier-than-normal, and capable of providing, selectively, a mean effective cylinder pressure higher than can the conventional arrangement of normal engines but capable of having a lower maximum cylinder pressure in comparison to conventional engines. An engine control module (ECM) (not shown in Fig. 1) and variable valves 3, 5 and 6 on conduits, as shown, provide a system for controlling the charge density, pressure, temperature, and the mean and peak pressure within the cylinder which allows greater fuel economy, production of greater torque and power at low RPM, with low polluting emissions for both spark and compression-ignited engines. In alternate embodiments, a variable valve timing system can be used and, with a control system such as an ECM, can control the time of opening and the time of closing of the intake valves 16 and 16' to further provide an improved management of conditions in the combustion chambers of cylinders 7a-7f of the engine 100^{1} to allow for a flatter torque curve and higher power, when

needed, and with low levels of both fuel consumption and polluting emissions.

Brief Description of Operation of the engine 100^1 shown in Fig. 1

The engine 100^1 of this invention shown in Fig. 1 is a high efficiency engine that attains both high power and torque with low fuel consumption and low polluting emissions. The new working cycle is an external compression type combustion cycle. In this cycle, part of the intake air (all of which is compressed in the power cylinders in conventional engines) is, selectively, compressed by at least one ancillary compressor 2. The temperature rise during compression can be suppressed by use of air coolers 10, 11, 12 which cool the intake air, and by a shorter compression stroke.

One suggested, preferred method of operation of the new-cycle engine 100^1 is thus:

1. Depending upon the power requirements of the engine (e.g., differing load requirements), either intake air at atmospheric pressure or intake air that has been compressed by at least one ancillary compressor 2 and has had its temperature and pressure controlled by bypass systems and charge-air coolers, is drawn into the power cylinder 7 by the intake stroke of piston 22.

2. (a) After the intake stroke is complete, the intake valve 16 (which can be single or multiple, 16, 16') is left open for a period of time after the piston 22 has passed bottom dead center, which pumps part of the fresh air charge back into the intake manifold 13, 14. The intake valve 16, 16' is then closed at a point which action seals the cylinder 7, thus establishing the compression ratio of the engine.

(b) Alternatively, the intake valve 16, 16' is closed early, during the intake stroke, before the piston 22 has reached bottom dead center. The trapped air charge is then expanded to the full volume of the cylinder 7 and compression of the charge starts when the piston 22 returns to the point in the compression stroke at which the intake valve 16, 16' closed.

3. (a) During the compression stroke of piston 22, at the point the intake valve 16 closed, either in 2(a) or 2(b) operation, compression begins, producing a small compression ratio. This makes it possible to restrain the temperature rise during the compression stroke.

(b) During light-load operation, such as in vehicle cruising or light-load power generation, the shutter valve 5 is closed and the air bypass valve (ABV) 6 on the compressor is, preferably opened so that the intake air is returned to the intake conduit 8 of the compressor 2 without being compressed. Shutter valve 3 can then direct the air charge around or through intercoolers 11 and 12. During this time, the engine pistons 22a-22f are drawing in naturally aspirated air through the compressor 2. This reduces compressor drive work and improves fuel economy.

(c) When more power is required, the charge density and pressure can be increased by closing air bypass valve (ABV) 6 causing compressor 2 to raise the air pressure and, alternatively, this can be accomplished by either cutting in a second stage of compression by compressor 1, as shown in Fig. 2, or by increasing the speed of compressor 2. At the same time, control valves 5 and 3 preferably, direct some or all of the air charge through one or more of intercoolers 10, 11, and 12 in order to increase charge-air density.

4. Compression continues, fuel is added, if not already present, the charge is ignited and combustion produces a large expansion of the gases against the piston 22 producing great energy in either mode 3(a), (b) or (c). This energy produces a high mean effective cylinder pressure and is converted into high torque and power, especially in mode (c).

Detailed Description of Operation of the engine 100^1 of Fig. 1

During the intake (1st) stroke of the piston 22 air flows through air conduits 15 from a manifold of air 13 or 14, which air (depending on power requirements) is either at atmospheric pressure or has been compressed to a higher pressure by compressor 2, through the intake valve 16 into the cylinder 7. During the intake stroke of piston 22 the intake valve 16 closes early (at point x). From this point, the cylinder 7 contents are expanded to the maximum volume of the cylinder. Then, during the compression (2nd) stroke, no compression takes place until the piston 22 has returned to the point x where the intake valve 16 was closed during the intake stroke. (At point x, the remaining displaced volume of the cylinder is divided by the volume of the combustion chamber, to establish the compression ratio of the engine.) Alternatively, during the intake (1st) stroke of piston 22, the intake valve 16 is held open through the intake stroke and past bottom dead center piston position, and through part of the compression (2nd) stroke for a significant distance, 10% or, to perhaps 50% or more of the compression stroke, thus pumping some of the charge-air back into intake manifold 13 or 14, and the intake valve 16 then closes to establish a low compression ratio in the cylinders of the engine. At the time of closure of intake valve 16, the density, temperature and pressure of the cylinder will be at approximate parity with the manifold 13 or 14 contents.

During light-load operation, such as in vehicle cruising or light-load power generation, the shutter valves 5 and 3 are closed and the air bypass valve (ABV) 6 on the compressor is, preferably, opened so that the intake air is returned to the

intake conduit 8 of the compressor 2 without being compressed. During this time the engine pistons 22a - 22f are drawing in naturally aspirated air through the compressor 2. This reduces compressor drive work and improves fuel economy.

When medium torque and power is needed, such as highway driving or medium electric power generation, preferably the shutter valve 5 to compressor 2 is closed and the air bypass valve (ABV) 6 is closed also. This causes the atmospheric pressure intake air to cease re-circulating through the compressor 2 and the compressor 2 begins to compress the charge-air to a higher-than-atmospheric pressure, while the closed shutter valves 5 and 3 direct the charge-air through conduits 104, 110, 111, and 121/122 bypassing the air coolers 10, 11 and 12, with the charge-air going directly to the manifolds 13 and 14 to power cylinders 7a - 7f where the denser, but hot, charge increases the mean effective cylinder pressure of the engine to create greater torque.

When more power is needed, such as when rapid acceleration is needed or for heavy-load electric power generation, preferably the air bypass valve (ABV) 6 is closed and the shutter valves 3 or 5 or both are opened. This causes the compressor 2 to compress all of the air charge. Shutter valves 3 or 5 or both then supply (depending on the respective opened/closed conditions of valves 3 and 5), the conditioned air charge through conduits 105 or 104, to conduit 110, and then through conduits 111 or 112 to the manifolds, 13, 14 and to the cylinders 7a - 7f via one, two, or all three of the charge coolers 10, 11 and 12. The very dense cooled air charge when mixed with fuel and ignited and expanded beyond the compression ratio of the engine produces great torque and power.

When greater power is needed the charge-air density and weight can be increased by increasing the speed of the compressor 2 or by cutting in a second compressor as in Fig. 2, for a second stage of pre-compression. The latter can be done by the engine control module 27 signaling air bypass valve (ABV) 6, Fig. 2,

to close to prevent re-circulation of part of the intake air into conduit 103 which negates, selectively, any second compression stage during light-load operation. At the time air density and pressure is increased, shutter valves 3 and 5 can direct part of all of the air charge through intercoolers 10, 11 and 12 in order to condense the charge and lessen the increase in the charge temperature and pressure, both accomplished by the cooling of the charge. This increases the mean effective cylinder pressure during combustion for high torque and power.

The heavier the weight of the air charge and the denser the charge, the earlier in the intake stroke (or the later in the compression stroke) the intake valve can be closed to establish a low compression ratio and retain power, and the less heat and pressure is developed during compression in the cylinder. In this 4-stroke engine the intake charge can be boosted in pressure by as much as 4-5 atmospheres and if the compression ratio is low enough, say 4:1 to 8:1 (higher for diesel fuel), even spark-ignited there would be no problem with detonation. The expansion ratio should still be large, 14:1 would be a preferred expansion ratio for spark ignition, perhaps 19:1 for diesel operation.

The compression ratio is established by the displaced volume of the cylinder 7 remaining after point x has been reached in the compression stroke (and intake valve 16 is closed) being divided by the volume of the combustion chamber. The expansion ratio in all cases is greater than the compression ratio. The expansion ratio is established by dividing the total displaced volume of the cylinder by the volume of the combustion chamber.

Fuel can be carbureted, or it can be injected in a throttle-body 56 (seen in Fig. 16), or the fuel can be injected into the inlet stream of air, injected into a pre-combustion chamber (Fig. 21) or, injected through the intake valve 16, or it may be injected directly into the combustion chamber. If injected, it should be at or after the piston 22 has reached point x and the intake valve is closed. The fuel can

also be injected later, similar to diesel operation, and can be injected at the usual point for diesel oil injection, perhaps into a pre-combustion chamber or directly into the combustion chamber or directly onto a glow plug. Some fuel can be injected after top dead center even continuously during the first part of the expansion stroke for a mostly constant pressure combustion process.

Ignition can be by compression (which may be assisted by a glow plug), or by electric spark. Spark ignition can take place before top dead center, as normally done, at top dead center or after top dead center.

At an opportune time the air-fuel charge is ignited and the gases expand against the piston for the power (3rd) stroke. Near bottom dead center at the opportune time exhaust valve(s) 17 open and piston 22 rises in the scavenging (4th) stroke, efficiently scavenging the cylinder by positive displacement, after which exhaust valve(s) 17 closes.

This completes one cycle of the 4-stroke engine.

The engine 100^2 of Fig. 2

Referring now to Fig. 2, there is shown a six cylinder reciprocating internal combustion engine 100^2 in which all of the cylinders 7a-7f (only two 7a, 7f of which are shown in a schematic drawing) and associated pistons 22a-22f operate in a 4-stroke cycle and all power cylinders are used for producing power to a common crankshaft 20 via connecting rods 19a-19f, respectively. An ancillary compressor 2 (herein depicted as a rotary compressor) supplies air which has been compressed, or allows delivery of air therethrough at atmospheric pressure, to manifolds 13 and 14 and to cylinders 7a-7f which cylinders operate in a 4-stroke cycle. A second ancillary compressor 1 is used, selectively, to boost the air pressure to compressor 2. Valves 3, 4, 5 and 6 and intercoolers 10, 11 and 12 are used, in the preferred embodiments, to control air charge density, weight,

temperature and pressure. The intake valves 16a-16f are timed to control the compression ratio of the engine 100^2. The combustion chambers are sized to establish the expansion ratio of the engine.

The engine 100^2 shown in Fig. 2 is characterized by a more extensive expansion process, a low compression ratio and the capability of producing a combustion charge varying in weight from lighter-than-normal to heavier-than-normal, and capable of selectively providing a mean effective cylinder pressure higher than can the conventional arrangement of normal engines but having similar or lower maximum cylinder pressure in comparison to conventional engines. An engine control module (ECM) 27 and variable valves 3, 4, 5 and 6 on conduits, as shown, provide a system for controlling the charge density, pressure, temperature, and the mean and peak pressure within the cylinder which allows greater fuel economy, production of greater torque and power at low RPM, with low polluting emissions for both spark and compression-ignited engines. In alternate embodiments, a variable valve timing system can be used and, with a control system such as an engine control module (ECM) 27, can control the time of opening, and the time of closing of the intake valves 16 to further provide an improved management of conditions in the combustion chambers of cylinders 7a-7f of the engine 100^2 to allow for a flatter torque curve and higher power, and with low levels of both fuel consumption and polluting emissions.

Brief Description of Operation of the engine 100^2 of Fig. 2

The engine 100^2 of this invention shown in Fig. 2 is a high efficiency engine that attains both high power and torque with low fuel consumption and low polluting emissions. The new working cycle is an external compression type combustion cycle. In this cycle, part of the intake air (all of which is compressed in the power cylinders in conventional engines) is compressed, selectively, by at least one ancillary compressor 1, 2. The temperature rise during compression can be suppressed by use of air coolers 10, 11, 12, which cool the intake air, and by a

shorter compression stroke.

One suggested, preferred method of operation of the new-cycle engine 100^2 is thus:

1. Depending upon the power requirements of the engine (e.g., differing load requirements), either intake air at atmospheric pressure or intake air that has been compressed by at least one ancillary compressor and has had its temperature and pressure adjusted by bypass systems and charge-air coolers, is drawn into the power cylinder 7 by the intake stroke of piston 22.

2. (a) After the intake stroke is complete, the intake valve 16 (which can be single or multiple) is left open for a period of time after the piston 22 has passed bottom dead center which pumps part of the fresh air charge back into the intake manifold 13,14. The intake valve 16 is then closed at a point which action seals cylinder 7, thus establising the compression ratio of the engine.

(b) Alternatively, the intake valve 16 is closed early, during the intake stroke, before the piston 22 has reached bottom dead center. The trapped air charge is then expanded to the full volume of the cylinder 7 and compression of the charge starts when the piston 22 reaches the point in the compression stroke at which the intake valve 16 closed.

3. (a) During the compression stroke of piston 22, at the point the intake valve 16 closed, either in 2(a) or 2(b) operation, compression begins, producing a small compression ratio. This makes it possible to lessen the temperature rise during the compression stroke.

(b) During light-load operation, such as in vehicle cruising or light-load power generation, the shutter valves 3 and 5 are closed and the air bypass valves (ABV) 4 and 6 to both compressors 1 and 2 are, preferably, opened so that the intake air is returned to the intake conduits 110 and 103 of the compressors 2 and 1 without being compressed. During this time, the engine pistons 22a-22f are drawing in naturally aspirated air past the compressor(s). This reduces compressor drive work and further improves fuel economy.

(c) When greater power is required, the charge density and pressure can be increased by closing air bypass valve (ABV) 4 causing compressor 2 to raise the charge-air pressure and, in addition, by either cutting in the second stage of compression by compressor 1 in the same manner, that of closing air bypass valve ABV 6, or by increasing the speed of compressor 2 or of both compressors. At the same time, shutter valves 3 and 5 would be opened to direct some or all of the air charge through intercoolers 10, 11 and 12 in order to increase charge-air density.

4. Compression continues, fuel is added if not already present, the charge is ignited and combustion produces a large expansion of the gases against piston 22 producing great energy in either mode 3(a), (b) or (c). This energy produces a high mean effective cylinder pressure and is converted into high torque and power, especially in mode (c).

Detailed Description of Operation of the engine 100^2 of Fig. 2

During the intake (1st) stroke of the piston 22 air flows through air conduits 15 from the manifold 13 or 14 of air which air (depending on power requirements) is either at atmospheric pressure or has been compressed to a higher pressure by compressor 2 and/or compressor 1, through the intake valve 16 into

the cylinder 7. During the intake stroke of piston 22 the intake valve 16 closes at point x sealing cylinder 7. From this point the air charge is expanded to the maximum volume of the cylinder. Then during the compression (2nd) stroke, no compression takes place until the piston 22 has returned to the point x where the intake valve 16 was closed during the intake stroke. (At point x, the remaining displaced volume of the cylinder is divided by the volume of the combustion chamber, to establish the compression ratio of the engine.) Alternatively, during the intake (1st) stroke of piston 22, the intake valve 16 is held open through the intake stroke and passed bottom dead center, and through part of the compression (2nd) stroke for a significant distance, 10% or, to perhaps 50% or more of the compression stroke, thus pumping some of the charge-air back into intake manifold 13 or 14, and the intake valve 16 then closes, sealing cylinder 7, to establish a low compression ratio in the cylinders of the engine. At the time of closure of intake valve 16, the density, temperature and pressure of the cylinder 7 contents will be approximately the same as that of the air charge in the intake manifolds 13 and 14.

During light-load operation, such as in vehicle cruising or light-load power generation, the shutter valves 3 and 5 are closed and the air bypass valves (ABV) 4 and 6 to both compressors 1 and 2 are, preferably opened so that the intake air is returned to the intake conduits 110 and 103 of the compressors 2 and 1 without being compressed. During this time the engine pistons 22a - 22f are drawing in naturally aspirated air past the compressor(s). This reduces compressor drive work and further improves fuel economy.

When medium torque and power is needed, such as highway driving or medium electric power generation, preferably the shutter valves 3 and 5 are closed and the air bypass valves (ABV) 4 and 6 are closed. This causes the atmospheric pressure intake air to cease re-circulating through the compressor 2 and 1 and both compressors begin to compress the charge-air to a higher-than-atmospheric

pressure, while the closed shutter valves 3 and 5 direct the charge-air through conduits 104, 110, 111, and 121/122 bypassing the air coolers 10, 11 and 12, in Fig. 2, with the charge-air going directly to the manifold 13 and 14 and to power cylinders 7a - 7f where the denser, but hot, charge increases the mean effective cylinder pressure of the engine to create greater torque and power.

When more power is needed, such as when rapid acceleration is needed or for heavy-load electric power generation, preferably the air bypass valve (ABV) 4 is closed and the shutter valve 3 is opened. This causes the compressor 2 to compress all of the air charge and shutter valve 3 directs the air charge through conduits 112 and 113 and the compressed charge-air is supplied to the manifolds 13 and 14 and to the cylinders 7a - 7f via the charge coolers 11 and 12. For even greater power the shutter valve 5 is opened and the air bypass valve 6 is closed and compressor 1 begins a second stage of compression, and all of the air charge is now directed through intercoolers 10, 11 and 12 for high charge density. The very dense cooled air charge when mixed with fuel and ignited and expanded beyond the compression ratio of the engine produces great torque and power.

The heavier the weight of the air charge and the denser the charge, the earlier (or later) the intake valve can be closed to establish a low compression ratio and retain power, and the less heat and pressure is developed during compression in the cylinder. In this 4-stroke engine the intake charge can be boosted in pressure by as much as 4-5 atmospheres and if the engine's compression ratio is low enough, say 4:1 to 8:1 (higher for diesel fuel), even spark-ignited there would be no problem with detonation. The expansion ratio would still be very large, 14:1 would be a preferable expansion ratio for spark ignition, perhaps 19:1 for diesel operation.

The compression ratio is established by the displaced volume of the cylinder 7 remaining after point x has been reached in the compression stroke (and intake valve 16 is closed) being divided by the volume of the combustion chamber. The expansion ratio in all cases is greater than the compression ratio. The expansion ratio is established by dividing the total displaced volume of the cylinder by the volume of the combustion chamber.

Fuel can be carbureted, or it can be injected in a throttle-body 56 (seen in Fig. 16), or the fuel can be injected into the inlet stream of air, injected into a pre-combustion chamber as in Fig. 21 or, injected through the intake valve 16, or it may be injected directly into the combustion chamber. If injected, it should be at or after the piston 22 has reached point x and the intake valve is closed. The fuel can also be injected later and in the case of diesel operation can be injected at the usual point for diesel oil injection, perhaps into a pre-combustion chamber or directly into the combustion chamber or directly onto a glow plug.

At an opportune time the air-fuel charge is ignited and the gases expand against the piston for the power (3rd) stroke. Near bottom dead center at the opportune time exhaust valve(s) 17 open and piston 22 rises in the scavenging (4th) stroke, efficiently scavenging the cylinder by positive displacement, after which the exhaust valve(s) closes.

This completes one cycle of the 4-stroke engine.

The engine 100^3 of Fig. 3

Referring now to Fig. 3, there is shown a six cylinder reciprocating internal combustion engine 100^3 in which all of the cylinders 7a-7f (only one of which is shown in a sectional view) and associated pistons 22a-22f operate in a 4-stroke cycle and all power cylinders are used for producing power to a common crankshaft 20 via connecting rods 19a-19f, respectively. An ancillary

reciprocating compressor 1 and an ancillary rotary compressor 2 supply pressurized charge air which has been compressed, or allow deliver of air therethrough at atmospheric pressure, to manifolds 13, 14 and to cylinders 7a-7f, which cylinders operate in a 4-stroke cycle. Valves 3, 4, 5 and 6 and intercoolers 10, 11 and 12 are used, in the preferred embodiments, to control air charge density, weight, temperature and pressure. The intake valves 16 are timed to control the compression ratio of the engine 100^3. The combustion chambers are sized to establish the expansion ratio of the engine.

The engine 100^3 shown in Fig. 3 is characterized by a more extensive expansion process, a low compression ratio and the capability of producing a combustion charge varying in weight from lighter-than-normal to heavier-than-normal, and capable of selectively providing a mean effective cylinder pressure higher than can the conventional arrangement of normal engines but having similar or lower maximum cylinder pressure in comparison to conventional engines. An engine control module (ECM) 27 and variable valves 3, 4, 5 and 6 on conduits, as shown, provide a system for controlling the charge density, pressure, temperature, and the mean and peak pressure within the power cylinder 7 which allows greater fuel economy, torque and power at low RPM, with low polluting emissions for both spark and compression-ignited engines. In alternate embodiments, a variable valve timing system can be used and, with a control system such as an engine control module (ECM) 27, can control the time of opening and the time of closing of the intake valves 16 to further provide an improved management of conditions in the combustion chambers of cylinders 7a-7f of the engine 100^3 to allow for a flatter torque curve and high power and with low levels of both fuel consumption and polluting emissions.

Brief Description of Operation of the engine 100^3 of Fig. 3

The engine 100^3 of this invention shown in Fig. 3 is a high efficiency engine that attains both high power and torque with low fuel consumption and low

polluting emissions. The new working cycle is an external compression type combustion cycle. In this cycle part of the intake air (all of which is compressed in the power cylinders in conventional engines) is selectively compressed by at least one ancillary compressor 1, 2. The temperature rise during compression can be suppressed by use of air coolers 10, 11, 12, which cool the intake air, and by a shorter compression stroke.

One suggested, preferred method of operation of the new-cycle engine 100^3 is thus:

1. Depending upon the power requirements of the engine (e.g., differing load requirements), either intake air at atmospheric pressure or intake air that has been compressed by at least one ancillary compressor and has had its temperature and pressure adjusted by bypass systems and charge-air coolers, is drawn into the power cylinder 7 by the intake stroke of piston 22.

2. (a) After the intake stroke is complete the intake valve 16 (which can be single or multiple, 16, 16') is left open for a period of time after the piston 22 has passed bottom dead center which pumps part of the fresh air charge back into the intake manifolds 13, 14. The intake valve 16 is then closed at a point which seals cylinder 7, thus establishing the compression ratio of the engine.

(b) Alternatively, the intake valve 16 is closed early, during the intake stroke, before the piston 22 has reached bottom dead center. The trapped air charge is then expanded to the full volume of the cylinder 7 and compression of the charge starts when the piston 22 reaches the point in the compression stroke at which the intake valve 16 closed.

3. (a) During the compression stroke of piston 22, at the point the intake valve 16 closed, either in 2(a) or 2(b) operation, compression begins, producing a small compression ratio. This makes it possible to lessen the temperature rise during the compression stroke.

(b) During light-load operation, such as in vehicle cruising or light-load power generation, the shutter valves 3 and 5 are closed and the air bypass valves (ABV) 4 and 6 on both compressors 1 and 2 are, preferably, opened so that the intake air is returned to the intake conduits 110 and 8 of the compressors 1 and 2 without being compressed. During this time the engine pistons 22a-22f are drawing in naturally aspirated air past the compressor(s). This reduces compressor drive work and further improves fuel economy.

(c) When greater power is required, the charge density and pressure can be increased by closing air bypass valve (ABV) 4 causing compressor 1 to raise the charge-air pressure and, in addition, by either cutting in the second stage of compression by compressor 2, if needed, in the same manner, that of closing ABV valve 6, or by increasing the speed of compressors 1 or 2, or both. At the same time, shutter valves 3 and 5 would direct some or all of the air charge through intercoolers 10, 11, and 12 in order to increase charge-air density.

4. Compression continues, fuel is added if not already present, the charge is ignited and combustion produces a large expansion of the gases against piston 22 producing great energy in either mode 3(a), (b) or (c). This energy produces a high mean effective cylinder pressure and is converted into high torque and power, especially in mode (c).

Detailed Description of Operation of the engine 100^3 of Fig. 3

During the intake (1st) stroke of the piston 22 air flows through air conduits 15 from the manifold 13 or 14 of air which air (depending on power requirements) is either at atmospheric pressure or has been compressed to a higher pressure by compressor 1 or 2 through the intake valve 16 into the cylinder 7. During the intake stroke of piston 22 the intake valve 16 closes (at point x). From this point the cylinder contents are expanded to the maximum volume of the cylinder. Then during the compression (2nd) stroke, no compression takes place until the piston 22 has returned to the point x where the intake valve 16 was closed, sealing the cylinder 7, during the intake stroke. (At point x, the remaining displaced volume of the cylinder is divided by the volume of the combustion chamber, to establish the compression ratio of the engine.) Alternatively, during the intake (1st) stroke of piston 22, the intake valve 16 can be held open through the intake stroke passed bottom dead center, and through part of the compression (2nd) stroke for a significant distance, 10% to perhaps 50% or more of the compression stroke pumping some of the charge-air back into intake manifold, and the intake valve 16, 16' then closes to establish a low compression ratio in the cylinders of the engine.

During light-load operation, such as in vehicle cruising or light-load power generation, the shutter valves 3 and 5 are closed and the air bypass valves (ABV) 4 and 6 on both compressors 1 and 2 are, preferably, opened so that the intake air is returned to the intake conduits 110 and 8 of the compressors 1 and 2 without being compressed. During this time the engine pistons 22a-22f are drawing in naturally aspirated air past the compressor(s). This reduces compressor drive work and further improves fuel economy.

When medium torque and power is needed, such as highway driving or medium electric power generation, preferably the shutter valve 3 to compressor 1

is opened, the air bypass valve (ABV) 4 is closed and ABV 6 remains open. This causes the atmospheric pressure intake air to cease re-circulating through the compressor 1; and the compressor 1, alone, begins to compress the charge-air to a higher-than-atmospheric pressure, while the closed shutter valves 3 and 5 directs the charge-air through conduits 104, 110, 111, and 121/122 bypassing the air coolers 10, 11 and 12, in Fig. 3, with the charge-air going directly to the manifolds 13 and 14 and to power cylinders 7a-7f where the denser heated charge increases the mean effective cylinder pressure of the engine to create greater torque and power.

When more power is needed, such as when rapid acceleration is needed or for heavy-load electric power generation, preferably the air bypass valves (ABV) 4 and 6 are closed and the shutter valves 3 and 5 arc opened on both compressors. This causes the compressors 1 and 2 to compress all of the air charge and shutter valves 3 and 5 direct the air charge away from conduit 8 and through the compressors 1 and 2, and the compressed charge-air is then supplied through conduits 105, 106, 110, 112, 113, 114 and 115 to the manifolds 13 and 14 and to the cylinders 7a-7f via the charge coolers 10, 11 and 12. The very dense cooled air charge when mixed with fuel and ignited and expanded beyond the compression ratio of the engine produces great torque and power.

The heavier the weight of the air charge and the denser the charge, the earlier in the intake stroke (or the later in the compression stroke) the intake valve can be closed to establish a low compression ratio and retain power, and the less heat and pressure is developed during compression in the cylinder. In this 4-stroke engine the intake charge can be boosted in pressure by as much as 4-5 atmospheres and if the compression ratio is low enough, say 4:1 to 8:1 (higher for diesel fuel), even spark-ignited there would be no problem with detonation. The expansion ratio would still be very large, 14:1 would be a preferred expansion ratio for spark ignition, perhaps 19:1 for diesel operation.

The compression ratio is established by the displaced volume of the cylinder 7 remaining after point x has been reached in the compression stroke (and intake valve 16 is closed) being divided by the volume of the combustion chamber. The expansion in all cases is greater than the compression ratio. The expansion ratio is established by dividing the total displaced volume of the cylinder by the volume of the combustion chamber.

Fuel can be carbureted, or it can be injected in a throttle-body, or the fuel can be injected into the inlet stream of air, injected into a pre-combustion chamber, Fig. 21, or, injected through the intake valve 16, or it may be injected directly into the combustion chamber. If injected, it should be at or after the piston 22 has reached point x and the intake valve is closed. The fuel can also be injected later and in the case of diesel operation can be injected at the usual point for diesel oil injection, perhaps into a pre-combustion chamber or directly into the combustion chamber or directly onto a glow plug.

At an opportune time the air-fuel charge is ignited and the gases expand the piston 22 for the power (3rd) stroke. Near bottom dead center at the opportune time exhaust valve(s) 17 open and piston 22 rises in the scavenging (4th) stroke, efficiently scavenging the cylinder by positive displacement, after which exhaust valve(s) 17 closes.

This completes one cycle of the 4-stroke engine.

The engine 100^4 of Fig. 4

Referring now to Fig. 4, there is shown a six cylinder reciprocating internal combustion engine 100^4 having two atmospheric air intakes 8 and 9 and corresponding intake conduits 15-A, 15-B, in which all of the cylinders (only one (7) of which is shown in a sectional view) 7a-7f and associated pistons 22a-22f

operate in a 4-stroke cycle and all power cylinders are used for producing power to a common crankshaft 20 via connecting rods 19a-19f, respectively. A compressor 2, in this figure a Lysholm type rotary compressor, is shown which, with air conduits as shown, supplies pressurized air to one or more cylinder intake valves 16-A. An air inlet 8 and an ancillary air inlet 9 and inlet conduits 15-A, 15-B selectably supply air charge at atmospheric pressure or air which has been compressed to a higher pressure to separate intake valves 16-A and 16-B opening to the same cylinder 7a-7f (for example, shown here opening to cylinder 7f). Intercoolers 10, 11 and 12 and control valves 3, 5 and 6 are used, in the preferred embodiments, to control the air charge density, weight, temperature and pressure. The intake valves 16a-B - 16f-B which receive air through manifold 14-B and intake conduits 15a-B to 15f-B, are timed to control the compression ratio of the engine 100^4. The combustion chambers are sized to establish the expansion ratio of the engine. Because of noticeable similarities between the engine 100^4 of Fig. 4 and that of Fig. 7 (where the auxiliary air inlet 9 system has been shown in phantom, for informational value), reference will be made as deemed helpful to Fig. 7 for certain common components.

The engine 100^4 shown in Fig. 4 is characterized by a more extensive expansion process, a low compression ratio and capable of producing a combustion charge varying in weight from lighter-than-normal to heavier-than-normal and capable of selectively providing a mean effective cylinder pressure higher than can the conventional arrangement in normal engines with similar or lower maximum cylinder pressure in comparison to conventional engines. Engine control module (ECM) 27 (refer, for example to Fig. 7) and variable valves 3, 5, and 6 on conduits, as shown, provide a system for controlling the charge pressure, density, temperature, and mean and peak pressure within the cylinder which allows greater fuel economy, production of greater power and torque at all RPM, with low polluting emissions for both spark and compression ignited engines. In alternate embodiments, a variable valve timing system with the ECM 27 can also

control the time of opening and closing of the intake valves 16-A and/or 16-B, to further provide an improved management of conditions in the combustion chambers to allow for a flatter torque curve, and higher power, with low levels of both fuel consumption and polluting emissions.

Brief Description of Operation of the engine 100^4 shown in Fig. 4

The new cycle engine 100^4 of Fig. 4 is a high efficiency engine that attains both high power and torque, with low fuel consumption and low polluting emissions. The new cycle is an external compression type combustion cycle. In this cycle, part of the intake air (all of which is compressed in the power cylinders in conventional engines) is selectively compressed by an ancillary compressor 2. The temperature rise at the end of compression can be suppressed by use of air coolers 10, 11, 12, which cool the intake air, by the late injection of temperature-adjusted air, and by a shorter compression stroke.

During operation, a primary air charge is supplied to the cylinder 7 through intake valve 16-B at atmospheric pressure or air which has been increased by perhaps one-half to one atmosphere through an ancillary air inlet 9 which can be carbureted. This charge can be compressed, fuel added if not present, ignited at the appropriate point near top dead center for the power stroke – providing high fuel economy and low polluting emissions.

When more power is desired, a secondary air charge originating from air inlet 8 is, preferably, introduced into the power cylinder 7 during the compression stroke by a second intake valve 16-A which introduces a higher pressure air charge after the first intake valve 16-B has closed in order to increase the charge density when needed. After the secondary air charge has been injected, intake valve 16-A quickly closes. The primary air charge may be boosted to a higher pressure by cutting in a second ancillary compressor, in series with compressor 2, (see for example, compressor 1 in Fig. 7, where the primary compressor to be

E-FILED
Thursday, 09 February, 2006 05:35:36 PM
Clerk, U.S. District Court, ILCD

used in the engine of Fig. 4 is the compressor 2 - shown in Fig. 4 and Fig. 7, for example, as a Lysholm rotary type) between air inlet 8 and manifold 13, 14, and can be intercooled. The temperature, pressure, amount and point of injection of the secondary charge, if added, is adjusted to produce the desired results. An intake valve disabler (there are several on the market, for example, Eaton Corp. and Cadillac), in preferred embodiments, may be used to disable intake valve 16-A when light-load operation does not require a high mean effective cylinder pressure. Alternatively, the air bypass valve (ABV) 6 is opened to re-circulate the charge-air back through the compressor 2 in order to relieve the compressor of compression work during light-load operation.

Alternatively, a one-way valve, one type of which is shown as 26 in Fig. 6 can be utilized to provide a constant or a variable "pressure ratio" in the cylinder 7, while improving swirl turbulence. In this alternate method of operation the intake valve 16-A would close very late and valve 26 would close only when the pressure in the cylinder 7 nearly equates or exceeds the pressure in conduit 15-A. Thus, the pressure in conduit 15-A, controlled by compressor speed, along with valves 3, 5 and 6 (and valve 4 in Fig. 7) would regulate the pressure, density, temperature and turbulence of the combustion process. A spring-retracted disc type, metal or ceramic, or any other type of automatic valve could replace valve 26.

Another alternate method of providing a low compression ratio, with a large expansion ratio and reduced polluting emissions is thus:

The air pressure supplied to intake runner-conduit 15-A is produced at an extremely high level, and intake valve 16-A is, in alternate embodiments, replaced by a fast-acting, more controllable valve such as but not limited to a high speed solenoid valve (not shown), which valve is, preferably, either mechanically, electrically or vacuum operated under the control of an engine control module

(ECM). In such an embodiment, a smaller, denser, temperature-adjusted, high-pressure charge, with or without accompanying fuel, can, selectively, be injected, tangentially oriented, much later in the compression stroke, or even during the combustion process, in order to increase charge density, to reduce peak and overall combustion temperatures, and to create the desired charge swirl turbulence in the combustion chamber(s).

One suggested, preferred method of operation of the new-cycle engine 100^4 is thus:

1. Depending upon the power requirements of the engine (e.g., differing load requirements), either intake air at atmospheric pressure or intake air that has been compressed by one compressor (not shown) and has had its temperature adjusted by bypass systems and charge-air coolers (not shown) is drawn into the cylinder 7 (intake stroke) through air inlet 9, manifold 14-B, intake conduits 15-B, and intake valves 16a-B-16f-B by intake stroke of piston 22.

2. (a) After the intake stroke is complete the intake valve 16-B (which can be single or multiple), is left open for a period of time after the piston 22 has passed bottom dead center, which pumps part of the fresh air charge back into the intake manifold 14-B.

   (b) Alternatively, the intake valve 16-B is closed early, during the intake stroke before the piston reaches bottom dead center. The trapped air charge is then expanded to the full volume of the cylinder 7.

3. (a) The compression (2nd) stroke now begins and, at the point the intake valve 16-B is closed to seal cylinder 7 in either 2(a) or 2(b) operation, compression begins (for a small compression ratio). This makes it possible to lessen the temperature rise during the compression stroke.

(b) When greater power is required a secondary compressed, temperature-adjusted air charge is injected into the cylinder 7 by intake valve 16-A which opens and closes quickly during the compression stroke at the point at which the intake valve 16-B which introduced the primary air charge closes, or later in the stroke, to produce a more dense, temperature controlled charge in order to provide the torque and power desired of the engine.

(c) Alternatively, when greater power is required, the secondary air charge can be increased in density and weight by causing shutter valves 5 and 3 to direct all or part of the air charge through one or more of intercoolers 10, 11 and 12 to increase the charge density and/or by increasing compressor speed or by cutting in a second stage of auxiliary compression, the latter two actions thereby pumping in more air on the backside. Alternatively, the timing of the closing of intake valve 16-B on either the inlet or compression stroke can be altered temporarily to retain a larger charge, and at the same time the timing of intake valve 16-A can be temporarily altered to open and close earlier during the compression stroke to provide a larger dense, temperature-adjusted air charge.

4. Compression continues, fuel is added if not present, the charge is ignited and combustion produces a large expansion of the combusted gases against the piston 22 producing great energy in either mode 3(a), (b), or (c). This energy is absorbed and turned into high torque and power, especially in mode (c).

5. Near bottom dead center of the piston, exhaust valves 17a-17f, 17a'-17f' open and the cylinder 7 is efficiently scavenged by the (4th) stroke of piston 22, after which valve(s) 17 close.

Detailed Description of the Operation of the engine 100^4 of Fig. 4

During the intake (1st) stroke of the piston 22 low pressure air flows through air conduit 15-B from the atmospheric air inlet 9 through manifold 14-B of air at atmospheric pressure or which has been boosted in pressure (or, alternatively, the low pressure air can be supplied by a pressure regulator valve 25 and conduit 15-B from compressed air line 15-A as shown in Fig. 5), through an intake valve 16-B into the cylinder 7. During the intake stroke of piston 22, the intake valve 16-B closes (point x). From this point the air charge in the cylinder is expanded to the maximum volume of the cylinder. Then, during the compression (2nd) stroke, no compression of the charge takes place until the piston 22 returns to point x where the inlet valve was closed. (At point x, the remaining displaced volume of the cylinder is divided by the volume of the combustion chamber, establishing the compression ratio of the engine.) At any point in the compression stroke of piston 22 at the time or after the piston 22 reaches point x a second inlet valve 16-A is, selectively, opened in order to inject a secondary pressurized air charge at a temperature, density and pressure deemed advantageous to the engine load, torque demand, fuel economy and emissions characteristics desired. Alternatively, during the intake of charge-air by intake valve 16-B, the intake valve 16-B is held open past bottom dead center for a significant distance, 10% to perhaps 50% or more of the compression stroke, thus pumping some of the charge back into the intake manifold 14-B, and then closed to establish a low compression ratio in the cylinder. During the compression stroke, at or after the time intake valve 16-B is closed, a secondary charge of high pressure, temperature-adjusted air which has been compressed by compressor 2 is, selectively, injected by a second intake valve 16-A, which opens and closes quickly, into the same cylinder 7. Alternatively, when greater torque and power are needed, the density of the secondary charge-air is greatly increased by increasing the speed of the primary compressor 2 or by cutting in another stage of compression, as in item 1, Fig. 7, and/or by routing the air charge through

intercoolers.

For light-load operation a shut-off valve, or a valve disabler 31 (such as shown in Fig. 7) on the high pressure intake valve 16-A, preferably, temporarily restrains the intake air, or holds the valve closed. This would add to the fuel economy of the engine. Alternatively, during light-load operation the shutter valve 5 is closed and the air bypass valve ABV 6 is opened so that part or all of the air pumped by compressor 2 would be returned to the inlet conduit of the compressor 2 for a low, or no pressure boost. Therefore, when secondary intake valve 16-A opens, the pressure of the air in conduit 15-A is approximately the same as, or not much greater than that from the initial charge. In an alternate embodiment, an ancillary automatic valve 26, Fig. 6, is arranged, as shown in Fig. 6, to prevent any back-flow of charge-air into conduit 15-A if the cylinder pressure should exceed the pressure in conduit 15-A before intake valve 16-A closed during the compression stroke of piston 22.

If an ancillary one-way valve (see valve 26 of Fig. 6) is present, the pressure ratio in cylinder 7 can be fully controlled by adjusting the pressure of the charge air passing through intake valve 16-A. The pressure ratio can then be controlled by valves 3, 5, 6 and by compressor speed and any throttle valve that may be present. In the use of valve 26, intake valve 16-A must be kept open until very late in the compression stroke, perhaps until piston 22 nears or reaches top dead center.

Fuel can be carbureted in Fig. 4, Fig. 4-B, Fig. 5, Fig. 7 and Fig. 33, injected in a throttle body 56 (seen in Fig. 16), or the fuel can be injected into the inlet stream of air, injected into a pre-combustion chamber or, injected through intake valves 16-A, 16-B, (16-B only if 16-B does not remain open past bottom dead center), or it may be injected directly into the combustion chamber at point x during the intake stroke, (during the intake stroke only if intake valve 16-B closes

before bottom dead center), or at the time or after the piston 22 has reached point x in the compression stroke. The fuel can be injected with or without accompanying air. In the case of diesel operation, fuel can be injected at the usual point for diesel oil injection, perhaps into a pre-combustion chamber or directly into the combustion chamber or directly onto a glow plug.

After the temperature-and-density-adjusting-air charge has been injected, if used, compression of the charge continues and with fuel present, is ignited at the opportune time for the expansion (3rd and power) stroke. (The compression ratio is established by the displaced volume of the cylinder remaining after point x has been reached on the compression stroke, being divided by the volume of the combustion chamber. The expansion ratio is determined by dividing the cylinders total clearance volume by the volume of the combustion chamber.) Now the fuel-air charge is ignited and the power, (3rd) stroke of piston 22 takes place as the combusted gases expand. Near bottom dead center of the power stroke the exhaust valve(s) 17, 17' opens and the cylinder 7 is efficiently scavenged on the fourth piston stroke by positive displacement, after which exhaust valve(s) 17 closes.

This completes one cycle of the 4-stroke engine.

It can be seen that the later the point in the compression stroke that point x is reached (the earlier or later the inlet valve is closed), the lower is the compression ratio of the engine and the less the charge is heated during compression. It can also be seen that the later the temperature-density-adjusting charge is introduced, the less work will be required of the engine to compress the charge, the later part of which has received some compression already by an ancillary compressor 2.

The engine 100^{4-B} of Fig. 4-B

Referring now to Fig. 4-B there is shown a six cylinder 4-stroke internal combustion engine similar in construction to the engine of Fig. 4 with the exception that the engine of Fig. 4-B is so constructed and arranged that compressor 2 receives charge-air from manifold 14-B through opening 8-B (shown in Fig. 7) and conduit 8 which air enters through common air intake duct 9. Intake runners 15a-C to 15f-C distributes the atmospheric pressure air to the intake valves 16-B of each power cylinder. This arrangement allows the provision of air to intake valves 16-A and 16-B at different pressure levels since the charge-air from conduits 15-A is selectively pressurized by compressor 2. The operation of the engine of Fig. 4-B is the same as that of the engine of Fig. 4.

The engine 100^{5} of Fig. 5

Referring now to Fig. 5, there is shown a six cylinder 4-stroke internal combustion engine 100^{5} similar to the engines 100^{4} of Fig. 4 and engine 100^{4-B} of Fig. 4-B with the exception that there are shown alternative ways that the dual atmospheric air inlets can be eliminated, preferably by providing the low pressure charge-air to intake valves 16-B by way of conduits 15a-D to 15f-D all leading from the common air inlet conduit 8, or from an optional air manifold 35-M, situated between inlet conduit 8 and the inlet of conduits 15a-D to 15f-D, which manifold would also supply air to compressor 2 through conduit 8-A. Providing the low pressure charge-air to intake valve 16-B by way of conduit 15-D, or by conduit 15-B (shown in phantom) would eliminate a second air filter and air induction system and would work well with either the first system described which involves closing the primary intake valve 16-B during the intake stroke of the piston 22 or alternatively closing the primary intake valve 16-B during the 2nd or compression stroke. Alternatively, as shown, the low pressure charge-air can be supplied by placing a pressure-dropping valve 25 in conduit 15-B routed for leading from the pressurized air conduit 15 (15-A) to the low pressure cylinder inlet valve 16-B in order to drop the inducted air pressure down to the level that

could be controlled by the system of compression ratio adjustment described herein, preferably down to 1.5 to 2.0 atmospheres (absolute pressure which is a boost of 0.5 to 1.0 atmosphere) and perhaps down to atmospheric pressure.

The operation of the engine 100^5 of Fig. 5 would be the same as the operation of the engine 100^4 of Fig. 4 although the low pressure primary air supply is supplied differently. Because of noticeable similarities between the engine 100^5 of Fig. 5 and that of Fig. 7, reference will be made as deemed helpful to Fig. 7 for certain common components.

During light-load operation of this 4-stroke cycle engine (Fig. 4, Fig. 4-B and Fig. 5) such as vehicle cruising or light-load power generation, the secondary air charge is, alternatively, eliminated by disabling high pressure intake valve 16-A temporarily (there are several valve disabling systems available, e.g., Eton, Cadillac, etc.) or air can be shut off to intake valve 16-A and the engine still produce greater fuel economy and power than do conventional engines.

Alternatively and preferably, during light load operation such as vehicle cruising, the compressor 2 can be relieved of any compression work by closing the shutter valve 5 and opening the air bypass valve 6 which circulates the air pumped back into the compressor 2 and then the air in intake conduits 15-A and 15-B or 15-D are approximately equal. Therefore, no supercharging takes place during this time. In one embodiment, automatic valve 26, Fig. 6, prevents back-flow of air during the compression stroke if compression pressure in the cylinder approximates or exceeds the pressure in conduit 15-A before the intake valve 16-A closes.

For increased power the secondary air charge may be increased by shutter valves 3 and 5 being preferably opened to direct the air charge to intercoolers 10, 11 and 12, which makes the charge denser and/or by increasing the speed of

compressor 2 or by adding a second stage of pre-compression by compressor 1 in Fig. 7, the latter two actions thereby pumping in more air on the backside. There is shown in Fig. 7 that the primary compressor 2 is a Lysholm rotary type and a secondary compressor 1 is a rotary compressor of the turbo type, although any type of compressors can be used in the engines of this invention.

Referring now to Fig. 6 there is shown the same 4-stroke engine and a similar operating system as described for the engines of Fig. 4, Fig. 4-B, Fig. 5, Fig. 7 and Fig. 33, except that the engine of Fig. 6 has an added feature in that the secondary intake valve 16-A has an auxiliary valve 26 which is automatic to prevent charge-air back-flow from cylinder 7. This feature will prevent any back-flow from occurring during the compression stroke of the engine of this invention. This feature can also be used to establish the pressure ratio of the engine, either variable or constant. If secondary charge air is being received through intake valve 16-A, the intake valve 16-A can be kept open during the compression stroke to near top dead center of piston 22, since automatic valve 26 closes at such time the pressure in cylinder 7 approximates the pressure in intake runner conduit 15-A. Therefore, the pressure differential between cylinder 7 and intake runner 15-A will allow closure of automatic valve 26, even though intake valve 16-A may still be open, allowing the pressure ratio of cylinder 7 to be controlled by the pressure of any charge air coming through intake runner 15-A, which in turn is controlled by valves 3, 5, and 6 and compressor speed and perhaps a throttle valve, if present, for engines having a single stage of pre-compression. Valves 3, 4, 5 and 6 and compressor speed and any throttle valve present would control the pressure ratios for engines having two stages of pre-compression. If no charge is passing from intake valve 16-A, automatic valve 26 will be already closed and the pressure ratio is set by the compression ratio of the engine and the density and temperature of the charge received by cylinder 7 through intake valve 16-B. The compression ratio is still set by the point in cylinder 7 that the primary intake valve 16-B is closed. The pressure ratio is set by the density and temperature of

the air present in cylinder 7 whether it enters through valve 16-B, 16-A or both, and by the compression ratio.

Any type of automatic valve can be used for item 26, perhaps a spring-retracted disc type which can be made of metal or ceramics.

The engine 100^7 of Fig. 7

Referring now to Fig. 7, there is shown a schematic drawing of a six cylinder engine 100^7 operating in a 4-stroke cycle. The engine is similar in structure and operation to the 4-stroke engine of Fig. 4, Fig. 4-B and Fig. 5 and shows alternative air induction systems utilizing air intake 9 (in phantom) or air intake 8', or both. Fig. 7 also shows three intercoolers 10, 11 and 12 and dual manifolds 13 and 14 plus alternative intake manifold 14-B. The need for dual atmospheric air intake (8' and 9 in Fig. 7) can be eliminated by providing air from port 8-B of manifold 14-B directly to air intake conduit 8' shown schematically, in Fig. 7.

One alternate air induction system shown in Fig. 7 supplies unpressurized charge-air to intake valve 16-B of the engine of Fig. 4-B and of Fig. 7 by providing atmospheric pressure air to the intake runners 15a-C to 15f-C leading from manifold 14-B in Fig. 4-B and Fig. 7 which receives atmospheric air through induction port 9, and then distributes the unpressurized air to intake valves 16-B of each power cylinder. Then, high pressure air enters through intake valve 16-A after piston 22 has reached point x during the compression stroke (the point in which intake valve 16-B closes and compression begins). Intake valve 16-A then closes, compression continues, fuel is added if not present and the charge is ignited near top dead center (TDC) and the power (3rd) stroke occurs.

A second alternate air induction system shown in Fig. 7 supplies low pressure intake air as also shown in Fig. 5 of alternatively receiving air from high pressure conduit 15-A through conduit 15-B with the optional pressure reducing valve 25, (shown in phantom in Fig. 5 and Fig. 7). The secondary high pressure air charge is injected by intake valve 16-A at the same time or later that the piston 22 reaches the point at which the intake valve 16-B closes and compression begins. Intake valve 16-A then quickly closes, compression continues, fuel is added if not present and the charge is ignited at the appropriate place for the power (3rd) stroke.

A third alternate and preferred air induction system shown in Fig. 7 supplies the primary air charge to intake valve 16-B as follows: Charge-air which has been pressurized to a low pressure by compressor 1, perhaps from 0.3 Bar to as much as 2 Bar or more, can selectively (and intermittently or continuously) be supplied to low pressure intake valves 16-B of the engine of Fig. 7 by way of conduit 32 leading from conduit 110 to the intake valves (16a-B through 16f-B) which conduit receives charge-air at atmospheric pressure or which has been pressurized and in any case has had its temperature optimized, all controlled by compressor 1 and intercooler 10 with the charge-air paths being controlled by valves 5 and 6 with the corresponding conduits. In this case the valve 33 is optional. After cylinder 7 has been charged and the compression ratio established by the closing of intake valve 16-B during the first or second stroke of piston 22, the high pressure intake valve 16-A opens on the compression stroke at the point which valve 16-B closes, to inject the dense, temperature adjusted air charge and then it closes, as compression continues and near top dead center, fuel being present, the charge is ignited and the power (3rd) stroke occurs. The use of this system also eliminates the need for dual atmosphere air intakes.

A fourth alternate air induction system shown in Fig. 7 supplies the primary charge-air to the low pressure intake valves 16-B by having charge-air coming selectively from intake system 9, manifold 14-B and intake runners 15-C (shown in phantom) or from conduit 32 which would direct air to power cylinder 7 at whatever level of pressure and temperature was needed at any particular time. With this arrangement, opening valve 33 at such a time that compressor 1 was compressing the charge passing through it would have the effect of increasing the density of the primary charge-air which in this case could also have its temperature as well as it pressure adjusted by compressor 1 and control valves 5 and 6. A one-way valve 34 would prevent the higher pressure air escaping through conduit 15-C. When less power was needed compressor 1 could be "waste gated" by opening, partially or completely control valve 6 and closing shutter valve 5. Alternatively, valve 33 could be closed by the engine control module (ECM) and the primary charge-air would be drawn into cylinder 7 at atmospheric pressure through intake duct 9 (shown in phantom). The piston 22 now begins its second stroke, the intake valve 16-B now closes, if not closed on the intake stroke, to establish the compression ratio and in all cases the heavy secondary charge enters through valve 16-A which opens at the time, or after, piston 22 has reached the point where intake valve 16-B had closed, valve 16-A then quickly closes, compression continues and the charge is ignited near top dead center and the power (3rd) stroke occurs.

With this fourth alternate air induction system the low pressure intake valve 16-B can (a) receive charge-air at atmospheric pressure or (b) can receive charge-air which has been compressed and cooled through conduit 32 or conduit 15-B. The high pressure intake valve 16-A (which opens at the time, or later, at which compression begins) can receive charge-air which (a) has been compressed and cooled in a single stage by compressor 1 or compressor 2, (b) has been compressed and cooled in two stages or more to a very high density or (c) which has had its temperature and pressure adjusted by control valves 5 and 6, all in

order to provide better management of combustion characteristics in regard to power, torque and fuel economy requirements and in regard to emissions control. By incorporating an optional one-way valve (see valve 26 shown in Fig. 6), the engines of Fig. 4, Fig. 4-B, Fig. 5 and Fig. 7 could have either a constant or a variable pressure ratio, the charge density, pressure, temperature and turbulence and the time of closing of valve 26 being controlled by valves 3, 5 and 6 and by compressor speed and by any throttle valve present in engines having one stage of pre-compression, and by the addition of valve 4, in engines having two stages of pre-compression. In either case the intake valve 16-A should be held open very late in the compression stroke, perhaps to near top dead center of piston 22.

One advantage to compressing the charge-air going to the low pressure intake valve 16-B in addition to highly compressing the secondary air charge is that during much of the duty cycle of such engines the charge density could be dramatically increased while keeping peak pressures and temperatures low, for high mean effective cylinder pressure. This system could provide all power necessary for vehicular travel in hilly country with perhaps the high pressure intake valves 16-A being deactivated by a valve deactivator indicated by 31 in Fig. 7, or by compressor 2 and/or compressor 1 being partially or wholly bypassed by control valves 3 and 4 and/or control valves 5 and 6 to vary the pressure and temperature going into manifolds 13 and 14 and then to intake valves 16-A. For utmost power, the valve deactivators could be turned off or eliminated.

Also shown in Fig. 7 is a suggested engine control system consisting of an engine control module (ECM) 27, two shutter valves 3 and 5, two air bypass valves 4 and 6, the optional pressure reducing valves 25 (25a-25f) on air conduits 15-B (15a-B - 15f-B), and a scheme of controlling the pressure, temperature and density by controlling air bypass valves 4 and 6 and shutter valves 3 and 5. As illustrated, air bypass valve 4 is closed to allow compressor 2 to fully compress the charge and shutter valve 3 is slightly open allowing part of the air to flow

uncooled (hollow arrows) and some of the air cooled (solid arrows) to the manifolds 13 and 14, all of which could be controlled by the ECM 27 in order to provide an air charge at optimum density, temperature and pressure. The hollow arrow 4-A in conduit 120 shows how ABV 4 can be partially opened to allow some of the air to bypass and return to compressor 2 in order to finely adjust the pressure of the secondary air charge that is injected to adjust the charge density and temperature. Alternatively, all of the air charge can be directed through the intercoolers 10, 11 and 12 or through bypass conduits 121 and 122, to the manifolds 13 and 14.

For high power with a low compression ratio and low polluting emissions, the air bypass valves (ABV) 4 and 6 are closed and the shutter valves 3 and 5 would be opened so that the compressors 2 and 1 raise the pressure of the air charge which is directed by shutter valves 3 and 5 through the intercoolers for maximum density. During the intake stroke the low pressure intake valve 16-B opens, piston 22 sucks in low pressure air, the intake valve 16-B closes before bottom dead center or after bottom dead center during the compression stroke. During the compression stroke, at the point the intake valve 16-B closed or later, intake valve 16-A opens to inject the secondary, dense, cooled air charge and then closes. Compression continues for a low compression ratio. Fuel is added, if not present, and the charge is ignited at the appropriate point near top dead center, (ignition can be before, at, or after top dead center) for the power (3rd) stroke with a large expansion ratio with high torque, then exhaust valve(s) 17 open and the scavenging (4th) stroke occurs, after which exhaust valve(s) 17 closes.

In these designs, fuel can be carbureted, throttle body injected, port injected, injected into the cylinder and can be introduced at any point between the air intake and the piston crown. The fuel air mixture can be stratified, or from a stoichiometric to a very lean mixture for spark ignition, to a very rich mixture for diesel operation. The engine power can be controlled by fuel metering alone or

the air supply can be properly adjusted to the proper fuel-air ratio by a throttle valve or can be "metered" by control valves 4 and 6 when using two stages of pre-compression and by control valve 4 when using a single stage of pre-compression.

In any of the engines of this invention, the problem common to normal engines of incomplete mixing of fuel, air and residual gas, with consequent variation in conditions at the ignition point is minimized and in some cases eliminated by the late air charge injection at high velocity. This problem, hereby addressed by the present invention, is extreme in current engines when gaseous fuel is injected directly into the cylinder where the spark may occur in mixtures of varying fuel-air ratios, hence with various rates of flame development.

(Concerning the importance of finding a solution to this particular problem, engine researchers at Massachusetts Institute of Technology state "The elimination of cycle-to-cycle variation in the combustion process would be an important contribution to improved [engine] performance. If all cycles were alike and equal to the average cycle, maximum cylinder pressures would be lower, efficiency would be greater, and most of all, the detonation limit would be higher, thus allowing appreciable increase in efficiency and/or mean effective cylinder pressure with a given fuel.")

The cyclic variation spoken of is minimized and, potentially, eliminated in the engine of each of the embodiments (including two-stroke embodiments and four-stroke embodiments) of the current invention by the significant swirl turbulence produced by the injection of high-pressure air. In addition, in any of the engines of this invention the swirl turbulence can be oriented tangentially to the cylinder wall by shrouding the inlet valve 16, and especially valve 16-A, or by the use of a one-way valve (such as valve 26 in Fig. 6 and Fig. 10). Even engines that receive an air charge during the intake stroke of the piston using a shrouded intake valve have a tendency to reduce unwanted cyclic variation and have a

decrease in octane requirement and an increase in knock-limited indicated mean effective (cylinder) pressure (klimep). The engine of the present invention, by injecting the charge-air, especially through a shrouded valve during the compression stroke, creates a much greater swirl turbulence to further eliminate unwanted cycle-to-cycle variation for cleaner, more complete combustion of the fuel.

The intake valve can rotate during operation and still have a flow tangential to the cylinder wall by using a conventional poppet valve and having the side of the valve head which is opposite the desired direction of the air flow being shrouded as it opens by a thickened section of the face of the engine's head forming a crescent shaped collar or projection to direct the air flow in the desired direction while the valve is open.

In the diesel combustion system, the better mixing process of the present invention allows much richer fuel-air ratios for greater smoke-limited power, and smoke and particulates are virtually eliminated to an extremely rich fuel-air ratio.

The swirl turbulence produced by high pressure charge injection during the compression stroke is not dampened by the compression stroke and the later the charge is injected, the smaller the volume of charge required to produce the desired swirl turbulence. In any reciprocating internal combustion engine operating in accordance with the method of the present invention, a very high pressure, temperature-controlled air charge can, selectively, be injected tangentially oriented, very late in the compression stroke, for example, just prior to, during or with fuel injection and, with extremely high pressures, even during the combustion process.

Since the secondary air charge in the engine of Fig. 4 through Fig. 7, Fig. 9, Fig. 9-B and Fig. 15 through Fig. 20 is compressible to an extremely high level

of pressure, the intake valve 16-A is, in alternate embodiments, replaced by a more controllable and fast-acting valve, such as, but not limited to, a high-speed solenoid valve (not shown). This valve is, preferably, operated either mechanically, electrically or by vacuum and is, preferably, controlled by an engine control module (ECM) as illustrated in Fig. 7, Fig. 9-B, Fig. 15 through Fig. 20 and Fig. 33. In this system the secondary air charge can, selectively, be injected very late in the compression stroke of piston 22 in order to increase charge density, and swirl turbulence, and to reduce peak and overall combustion temperatures and to lessen the production of polluting emissions. The injection could be performed in a tangentially oriented fashion. This would greatly increase swirl turbulence and prevent undesirable cyclic variations which are common in normal engines and most troubling in gaseous or diesel fueled engines.

The use of this system should result in lower maximum cylinder pressures and temperatures. Efficiency should be greater and the detonation limit higher, thus allowing an appreciable increase in efficiency and mean effective cylinder pressure with a given fuel. All of the engines of this invention operate with a more complete expansion process as compared to the typical prior art engines, thereby providing further improvements in efficiency and emissions characteristics.

In accordance with the present invention, the 4-stroke engines of the present invention (for example, Fig. 1, Fig. 2, Fig. 3, Fig. 4, Fig. 4-B, Fig. 5, Fig. 7 and Fig. 33) are designed, as are the 2-stroke engines of the present invention (for example, Figs. 8-11, 25 and 33), to use an expansion ratio larger than the compression ratio. In order to accomplish this result, the expansion ratio is set by selecting the appropriate combustion-chamber volume and the compression ratio is reduced below this value by very early or very late closing of the inlet valve.

The engine 100^8 of Fig. 8

Referring now to Fig. 8, there is shown a six cylinder reciprocating internal combustion engine 100^8 for gasoline, diesel, alcohol, natural gas, hydrogen or hybrid dual-fuel operation and having six cylinders 7a-7f (only one, 7f, is shown in a sectional view) in which the pistons 22a-22f are arranged to reciprocate. Another cylinder is indicated only by the presence of the lower end of the cylinder liner 7a. A cut-a-way view shows a double-acting compressor cylinder 1. Pistons 22a - 22f are connected to a common crankshaft 20 in a conventional manner by means of connecting rods 19a - 19f, respectively. The engine 100^8 of Fig. 8 is adapted to operate in a 2-stroke cycle so as to produce six power strokes per revolution of the crankshaft 20. To this end compressor 1 takes in an air charge at atmospheric pressure, (or alternatively an air charge which previously had been subjected to compression to a higher pressure via an admission control valve 6 through an intake conduit 102, leading from compressor 2 by way of bypass control valve 6 and shutter valve 5 and bypass conduit 104 or through the intercooler 10). During operation of the engine of Fig 8, the air charge is compressed within the compressor 1 by its associated piston 131, and the compressed charge is forced through an outlet into a high-pressure transfer conduit 109 which leads to bypass valve 3 which is constructed and arranged to channel the compressed charge through intercoolers 11 and 12 or through bypass conduit 111 in response to signals from the engine control module (ECM) 27. This module directs the degree of compression, the amount and the direction of the flow of the compressed charge through the intercooler and/or the bypass conduit into manifolds 13 and 14. Manifolds 13 and 14 are constructed and arranged to distribute the compressed charge by means of branch intake conduits 15a - 15f and to inlet valves 16 and 16', and to the remaining five power cylinders. Alternatively, an ancillary compressor 2 receives atmospheric air through inlet opening 8, pre-compresses the air charge into conduit 101 leading to control valve 5 which in response to signals from ECM 27 will direct the compressed charge through intercooler 10 or bypass conduit 104 to compressor 1. The ECM 27 can also control valves 4 and 6 to direct part or all of the charge

passing through compressors 1 and 2 back through conduits 120 and 103 in order to adjust the amount of compression of compressors 1 and 2 ranging in either or both compressors from full compression to no compression, thus during light-load operation either compressor 1 or compressor 2 could supply the needed compressed air to the cylinders.

The Engine 100^8 of Fig. 8 has camshafts 21 which are arranged to be driven at the same speed as the crankshaft in order to supply one working stroke per revolution for the power pistons. The reciprocating compressor can have one or more double-acting cylinders one is pictured 1 and can have more than one stage of compression, and the crankshaft 20 would supply two working strokes per revolution, for one or more compressors, as described hereinafter. The reciprocating compressor could alternatively be driven by a short crankshaft which would be rotated by a step-up gear on the main crankshaft driving a smaller gear on the ancillary crankshaft. The ancillary rotary compressor 2 could be driven by V-pulley operated by a ribbed V-belt and could have a step-up gear between the V-pulley and the compressor drive shaft. The rotary compressor 2 could also have a variable speed drive as in some aircraft engines.

Description of the operation of the engine 100^8 of Fig. 8.

Charge-air is induced into the inlet opening 8 of compressor 2, from there it passes through the compressor 2 where the charge is then inducted into conduit 101 to shutter valve 5 where the charge is directed either through intercooler 10 or through air bypass valve 6 where a portion or all of the charge can be directed back through the compressor 2 where the charge is re-circulated without compression, or valve 6 can direct the air charge into the inlet of compressor 1 where the air charge is pumped out the outlet duct of compressor 1 which leads to shutter valve 3 where the charge is directed either through intercoolers 11 and 12 or through air bypass valve 4 or a portion through both, leading to manifolds 13 and 14 which distribute the charge-air to the intake valves 16 and to the intake

valve of each power cylinder 7 of the engine 100[8]. (Bypass valve 4 can direct part or all of the air charge to manifolds 13 and 14, or can recirculate part or all of the air charge through conduit 120 back to conduit 106 and into the inlet of compressor 1.) The engine control module (ECM) 27 controls valves 3, 4, 5, and 6, in order to adjust the pressure, temperature and density of the charge that is inducted into the engine's combustion chambers 130. The same ECM 27 can control a variable-valve-happening control system to adjust the time of opening and closing of the inlet valves 16 and exhaust valves 17 of the power cylinders in relationship to the angle of rotation of crankshaft 20, in order to adjust the compression ratio and charge density of the engine for optimum performance in regard to power, torque, fuel economy and characteristics of fuel being supplied.

The operation of the power cylinder 7 is in this manner:

Alternate Method 1:

Near the end of the power stroke in cylinder 7, the exhaust valve(s) 17, 17' open and, with the exhaust valve still open, the piston 22 begins the second or exhaust stroke. During the exhaust stroke, perhaps as early as 70° to 60° before top dead center the exhaust valves 17, 17' close. At the point the exhaust valves are closed the compression ratio is established, the intake valves 16, 16' are opened at that point or later in the compression stroke, the compressed air and/or air-fuel charge is injected into the combustion chamber 130 of the power cylinder 7, intake valve 16, 16' closes at perhaps 60° before top dead center, with the swirl and squish turbulence accompanying the high-pressure air injection, the piston 22 continues towards the end of its stroke thus compressing the charge producing a very low compression ratio, which can be as low as 2:1. If fuel is not already present as a mixture, fuel is injected into the incoming air stream or it is injected into a pre-combustion chamber or directly into the combustion chamber after closure of the intake valve. The fuel can be injected into the midst of the charge

swirl for a stratified charge combustion process, or it can be injected onto a glow plug if diesel fuel is to be ignited. The fuel-air mix is ignited by compression or spark, the latter at the opportune time for greatest efficiency and/or power. Generally, the fuel would be injected and ignited before top dead center of the piston. The fuel can be injected later and perhaps continuously during the early part of the expansion stroke for a mostly constant-pressure combustion process and especially for diesel fuel. The fuel air mixture is ignited preferably before the piston reaches top dead center and the combusted charge expands against the piston as it moves toward bottom dead center. At near bottom dead center of the piston stroke, the exhaust valve(s) is opened and the exhausted mixture is scavenged by positive displacement by the piston 22 during the scavenging stroke. If the intake valve 16, 16' is opened earlier some valve overlap with the exhaust valve may be required for scavenging. If the intake valves 16, 16' are opened late no valve overlap would be needed, exhaust valve(s) 17, 17' closing at approximately the same time that intake valve(s) 16, 16' open. The expansion ratio of the engine could be about 19:1, for diesel fuel, 14:1 for gaseous fuel or gasoline, which expansion ratio is established by dividing the cylinder displacement volume by the volume of the combustion chamber.

Alternate operation method 2:

Near the end of the power stroke in cylinder 7 the exhaust valve(s) 17, 17' open, and with exhaust valve 17, 17' still open, begins its second or scavenging-charging stroke. At a point near mid-stroke, (e.g., about 90° before top dead center,) the exhaust valve 17, 17'still being open, the intake valve opens with a small valve overlap to admit high pressure scavenging and charging air. One or more intake valves 16 can be recessed, as in item 30 in Fig. 11, in order to direct the first inlet air down and along the cylinder 7 wall in order to loop-scavenge the cylinder during the very small overlap of valves 16, 16' and 17, 17'. The exhaust valve 17, 17' remains open to the point at which compression should begin and

then receives the air charge as it closes, intake valve(s) 16, 16' closing soon after, with the cylinder adequately scavenged and charged with temperature-adjusted fresh air now at high pressure. The piston 22 continues its stroke to compress the charge producing a low compression ratio, ideally 13:1 to 4:1, depending on the type of fuel used. The compression ratio is established by the point in the stroke of piston 22 in which the exhaust valve(s) 17, 17' closes, and is calculated when the remaining displaced volume of the cylinder is divided by the volume of the combustion chamber.

As piston 22 continues to rise from point x, where the exhaust valve closes establishing the compression ratio, and where compression of the charge started, the pressure starts to rise at the same point. The dense cooled air charge with the short compression stroke will produce a low compression ratio with a very heavy charge, with low maximum cylinder pressure but with high effective mean cylinder pressure for great torque and power.

The pressure ratio will be established by the density, pressure and temperature of the incoming charge, the length of time inlet valve(s) 16, 16' are open and the point the exhaust valve(s) 17, 17' closes. The later the exhaust valves 17, 17' close, the less the charge-air expands after injection, the less work is required to compress the charge and the less overlap of inlet and exhaust valve is required and the lower is the compression ratio.

At some point, perhaps as early as 150-120 degrees before piston top dead center position, cylinder 7 would be adequately scavenged and the exhaust valve 17, 17' could be closed before, or no later than, the time the intake valves 16, 16' are opened to admit, in this case, the entire air charge, most of the exhausted gases having been displaced by scavenging. (In some cases some residual exhaust gases are beneficial and experiments will show at what point both intake and exhaust valves can be closed without any overlap.) In this instance the "effective"

compression ratio could be as low as 3:1 or even 2:1, again producing low maximum cylinder pressure and temperature but with high mean effective pressure. Fuel can be injected as early as at the point the exhaust valve closes and can be as early as about 150°-120° before the end of the compression stroke. The fuel-air mixture is ignited before, at, or after, top dead center and the expansion (2nd) stroke takes place. The expansion ratio is established by dividing the cylinder's displaced volume by the combustion chamber volume and could be about 19:1 for diesel applications, and 14:1 for gasoline or gaseous fuels.

An engine control module (ECM) 27 can manage temperatures and densities of the charge being introduced into the cylinder 7 or combustion chamber 130 and the timing of the inlet into the combustion chamber and can thus adjust charge densities, turbulence, temperatures and pressures providing a means of restraining peak temperatures and pressures yet with a mean effective cylinder pressure higher than in a normal engine, when needed, and further providing for lower levels of unwanted polluting emissions.

A suggested light-load, fuel efficient operation system as indicated on line B(bp) in Fig. 13, would be thus: A nominal compression ratio of 13:1 could be chosen, with an expansion ratio of 19:1. The latter would establish the volume of the combustion chamber, the former would establish the maximum charge pressure (not maximum cylinder pressure), about 530 psi when compressed adiabatically. The ECM 27 would signal shutter valves 5 and air bypass control valve 6 to re-circulate the air being pumped through compressor 2, back through the compressor 2 without being compressed or for any type compressor, open a waste-gate valve to bypass the compressor. Shutter valve 5 bypasses the intercooler 10 and directs the charge into the inlet of compressor 1. Compressor 1 would compress the charge adiabatically to say, 7:1 compression ratio. ECM 27 controls would bypass intercoolers 11 and 12 and introduce the charge into manifolds 13 and 14 with the heat-of-compression retained. If the exhaust valves

17, 17' are closed and the inlet valve 16, 16' of cylinder 7 are opened near the end of the compression stroke of piston 22 the effective compression ratio can be as low as 2:1, producing a "nominal" compression ratio of 14:1. (If the exhaust valves 17, 17' are closed and the inlet valve 16, 16' are opened earlier in the exhaust stroke, the injected charge-air should be of lower pressure and the "effective" compression ratio, that in-cylinder compression producing heat, would be greater. If the intake valves 16, 16' opened at mid-stroke, after exhaust valves 17, 17' close, and a nominal compression ratio of 13:1 were desired with an effective compression ratio of 4:1, then the charge introduced into the cylinder at mid-stroke should be compressed 4:1.) The uncooled charge is then compressed in the cylinder with an effective compression ratio of 4:1, and in either case, with a pressure of about 530 psi and a temperature above 900° F. The fuel/air charge is then ignited and expanded against the piston to the full volume of the power cylinder with an expansion ratio of 19:1.

At such a time that great power was required, the ECM 27 could signal the air bypass valve 4 and 6 to close. Compressor 2 then begins to compress the air charge to a higher pressure, at the same time ECM 27 would open shutter valves 3 and 5 to send the charge-air through the intercoolers 10, 11 and 12. Therefore, as the charge-air is cooled, and could be to as low as 150-200° F, more air is now pumped into the engine on the back side by the additional compression stage 2, to prevent a substantial pressure drop in the charge-air due to the cooling of the charge before combustion. The air charge in the combustion chamber is now compressed 2:1 (line B(ic), Fig. 13) and is maintained near the design pressure, in this case about 500-530 psi, although cooled, to significantly increase the density of the charge and the torque and power of the engine. The cooler air charge provides lower peak temperature and pressure and coupled with the high turbulence causes production of less unburned hydrocarbons, NO_x and other polluting emissions and with smoke and particulates being virtually eliminated to a very rich fuel-air mixture. The air-fuel charge is now ignited and expanded to

the full volume of the cylinder with an expansion ratio of 19:1 although the effective compression ratio is only 2:1 (see line B (ic) in Fig. 13).

With either operation scheme the engine can be supercharged to a higher state than can conventional engines because in most cases the inlet valve is closed at the time of combustion chamber charging and a cooler air charge prevents detonation and reduces polluting emissions. Also in most cases residence time of the fuel is less than that required for pre-knock conditions to occur.

When less power is needed, as during vehicle cruising or light-load power generation, the engine operation could revert to light-load operation, e.g., one stage of compression could be cut out and the first cooler 10 bypassed by the air charge being re-circulated by shutter valve 5 and by bypass valve 6. Shutter valve 3 and air bypass valve 4 could direct all of the charge from compressor 1 passed intercoolers 11 and 12 with the heat-of-compression retained, into manifolds 13 and 14 and to the cylinder for the less dense, more fuel efficient operation mode.

Still referring to Fig. 8, there is shown a view of a cylinder head of the engine of Fig. 8 through Fig. 11 and Fig. 25, showing optional pressure balanced intake valves with cooling being provided by conduits with intake conduit 29 and outlet conduit 29', one-way valves (not shown) which allow expansions 28 on the valve stems, as they reciprocate with intake valves 16 to pump a cooling and lubricating oil or oil-air mixture through the spaces above the valve stem expansions.

Pressure-balanced intake valves 16, 16' in Figs. 8, 11, and 25, and 16-A in Figs. 9 and 10 provide for rapid intake valve closure and allows large non-restricting intake valves and smaller than normal valve return springs. (When the intake valve is opened, pressure equilibrium almost immediately takes place below the valve head within the combustion chamber and above the valve head

within the intake runner, then the pressure in the intake runner acting on the piston-like arrangement on the valve stem tends to cause the valve stem to follow the down-slope of the cam profile for rapid valve closure. Also, a new "Magnavox" pressure operated, "square wave" intake valve could be used in the engines of this invention.)

The operation of the pressure balanced intake valves is in this manner:

The pressure balanced intake valves have expansions 28 on the valve stems, the lower surface of which are exposed to gases in conduit 15A. When the valve stem is depressed by a cam 21 and intake valve(s) 16 opens in Fig. 8 through Fig. 11, or Fig. 25 any pressure in conduit 15A is equilibrated with pressure in the combustion chamber and at that time the only reactive force is by any pressure in conduit 15A which is against the underside of valve stems expansions 28, causing a rapid closure of the valve. One-way valves (not shown) on inlet and outlet channels 29 and 29' are preferably provided for oil or oil-air mixture induction through spaces above expansions 28, and alternatively through the valve stem expansions 28. The oil inlet could be at a low point in the cylinder head where oil would collect to supply the cooling system. Alternatively, oil inlet line 29 could be connected to an oil or oil-air mix supply line. The inlet conduit 29 and the exit conduit 29' from the cooling system would be fitted with one-way valves and the exit conduit 29' could be higher than the inlet conduit 29 or could be connected to an oil discharge line leading to the engine oil reservoir. The valve stem expansions 28 could also have a channel through them with a one-way valve on each side. Since historically exhaust valves have been difficult to cool, this same system would provide adequate cooling for the exhaust valves even though there is not great pressure in the exhaust conduit. This system would then be applied to exhaust valves 17 from which exhaust ports 18 originate, or to the exhaust valves of any engine to provide long life for the exhaust valves and the valve seats.

On large engines the lines from the pumps described here can converged into larger lines and the oil pumping provided by them could replace the conventional oil pump on said engine.

The engine 100[9] of Fig. 9

Referring now to Fig. 9, there is shown a six cylinder reciprocating internal combustion engine having one atmospheric air intake, in which all of the cylinders 7a - 7f (only one (7f) is shown in a sectional view) and associated pistons 22a - 22f operate in a 2-stroke cycle and all power cylinders are used so as to produce six power strokes per revolution of crankshaft 20 for producing power to a common crankshaft 20 via connecting rods 19a - 19f, respectively. A primary compressor 1, in this figure a double-acting reciprocating type, is shown which, with air conduits as shown, supplies pressurized air to one or more cylinder intake valves 16-A and 16-B (the latter only if a primary charge to valve 16-B comes from conduit 15). A secondary compressor 2 of the Lysholm type is shown in series with compressor 1. An air inlet 8 and associated compressors 1 and/or 2 with inlet conduits and manifolds 13 and 14 supply charge-air, which has been compressed to a higher than atmospheric pressure, to the air intake runner 15-A and intake valve 16-A to cylinder 7. A second conduit 32 directs an air charge from conduit 110 through optional shut-off valve 33 to intake valve 16-B to supply lower pressure air to the same cylinder. Alternatively a second conduit 15-B from conduit 15-A can be fitted with a pressure control valve 25 (both in phantom) and can direct the lower pressure air charge to the intake valve 16-B. Intercoolers 10, 11 and 12 and control valves 3, 4 5 and 6 are used to help control the density, weight, temperature and pressure of the charge air. The intake valves are timed to control the compression ratio of the engine. The combustion chambers are sized to establish the expansion ratio of the engine.

The engine of Fig. 9, Fig. 11 and Fig. 25 have cam shafts 21 fitted with cams and are arranged to rotate at engine crankshaft speed in order to supply one power stroke for each power piston for each crankshaft rotation.

The engine 100^9 shown in Fig. 9 is characterized by a more complete expansion process and a lower compression ratio than typical engines, and is capable of producing a combustion charge varying in weight from lighter-than-normal to heavier-than-normal and capable of selectively providing a mean effective cylinder pressure higher than can the conventional arrangement in normal engines with similar or lower maximum cylinder pressure. Engine control module (ECM) 27 and variable valves 3, 4, 5 and 6 on conduits as shown provide a system for controlling the charge pressure, density, temperature, and mean and peak pressure within the cylinder which allows greater fuel economy, production of greater power and torque at all RPM, with low polluting emissions for both spark and compression ignited engines. In alternate embodiments, a variable valve timing system with the ECM 27 can also control the time of opening and closing of the intake valves 16-A or 16-B or both, to further provide an improved management of conditions in the combustion chamber to allow for a flatter torque curve, higher power and with low levels of both fuel consumption and polluting emissions.

Brief Description of Operation of engine 100^9 shown in Fig. 9

The new cycle engine 100^9 of Fig. 9 is a high efficiency engine that attains both high power and torque, with low fuel consumption and low polluting emissions.

The new cycle is an external compression type combustion cycle. In this cycle part of the intake air (all of which is compressed in the power cylinders in conventional engines) is compressed by at least one ancillary compressor. The temperature rise at the end of compression can be suppressed by use of air coolers, which cools the compressed air, and by a shorter compression stroke.

During operation air is supplied to an intake valve 16-B of the power cylinder 7 which has been increased in pressure by perhaps one-third to one atmosphere or more through an air intake conduit 32 leading from ancillary compressor 2, or the air enters by conduit 15-B and a pressure control valve 25. A second air conduit 15A selectively supplies charge-air at a higher pressure to a second intake valve 16-A leading to the same power cylinder 7. (In this design the intake valve 16-B admits the low pressure air after exhaust valves 17 open near bottom dead center in the power stroke, and exhaust blowdown has occurred.) Exhaust blowdown occurs after exhaust valve(s) 17 open and now intake valve 16-B opens and closes quickly to inject low pressure scavenging air. The cylinder 7 is further scavenged by loop scavenging as piston 22 begins its compression stroke. Intake valve 16-B is now closed and piston 22 rises in the compression stroke to the point where compression should begin at which point exhaust valve 17 closes sealing cylinder 7 and establishing the compression ratio. Compression continues and at near top dead center, at a point deemed appropriate, fuel being present, the charge is ignited by spark or compression and the power stroke takes place.

When more power is desired, a secondary air charge from conduit 15-A can be introduced into the power cylinder at the time of, or after closure of exhaust valve(s) 17a during the compression stroke, by intake valve 16-A which introduces a higher pressure air charge, and quickly closes, in order to increase the charge density. Alternatively, the primary air charge may be boosted to a higher pressure by adjusting air bypass valve 6 to send more air through compressor 2, by increasing the speed of compressor 2 or by changing the setting on the control valve 25 on the conduit 15-B which alternatively supplies the low pressure primary air charge to intake valve 16-B. The temperature, pressure, amount and point of injection of a secondary charge, if added, is adjusted to produce the desired results.

For light-load operation an intake valve disabler 31 (there are several on the market, for example, Eaton Corp. and Cadillac) can disable intake valve 16-A when light-load operation does not require a high mean effective cylinder pressure. Alternatively, during the time the low pressure air to intake valve 16-B is supplied by conduit 15-B the air bypass valve (ABV) 6 can be opened to re-circulate some of the charge-air back through the compressor 2 in order to relieve the compressor of compression work during light-load operation. Additionally, and preferably, air bypass valve 4 can re-circulate part or all of the air pumped by compressor 1 back to the inlet of compressor 1 on demand in order to reduce pressure and density of the secondary charge going through intake valve 16-A.

One suggested, preferred method of operation of the new-cycle engine 100' is thus:

1. Intake air at greater than atmospheric pressure that has been compressed by at least one compressor 2 and has had its temperature adjusted by bypass systems or charge-air cooler 10, is introduced into the cylinder 7 through intake valve 16-B, which is opened by a small lobe on cam 21-B at near bottom dead center, at the end of the power stroke (perhaps at bottom dead center) after exhaust valve(s) 17, 17' have opened earlier say, at 40° before bottom dead center, for exhaust blowdown. The exhaust valves remain open after bottom dead center for further scavenging of the cylinder 7. The intake valve 16-B closes at near bottom dead center.

2. After the power stroke is complete and cylinder 7 is filled with fresh charge, the exhaust valve(s) 17 is left open for a period of time after the piston has passed bottom dead center (with intake valve 16-B now closed) in order to further scavenge the power cylinder with the fresh air charge present and further, in order to establish a low compression ratio of the

engine, the compression ratio being established by the displaced cylinder volume remaining at the point of the exhaust valve 17 closure, being divided by the volume of the combustion chamber.

3. With the cylinder 7 now filled with fresh air, the compression (2nd) stroke continues and, at some point the exhaust valve 17 is closed and compression begins for a small compression ratio. This makes it possible to lessen the temperature rise during the compression stroke. Compression continues, fuel is added if not present, and the charge is fired a the appropriate point near top dead center and the power stroke occurs.

4. (a) Alternatively, when greater power is required, a secondary compressed, temperature-adjusted air charge is injected into the cylinder 7 by intake valve 16-A opening and quickly closing during the compression stroke at the point at which the exhaust valve closes, or later in the stroke, to produce a more dense charge in order to provide the torque and power desired of the engine.

(b) When even greater power is required, the secondary air charge can be increased in density and weight by being passed through one or more intercoolers 10, 11 and 12 and by increasing compressor speed or by cutting in another stage of auxiliary compression or by passing more of the charge air through the operational compressors.

5. Near bottom dead center of the piston position, exhaust valves 17, 17' open and the cylinder is efficiently scavenged by blowdown and by the air injected by primary intake valve 16-B.

Detailed Description of the Operation of the engine 100[9] of Fig. 9

Near the end of the power (1st) stroke of the piston 22, perhaps at about 40° before bottom dead center position of piston 22, the exhaust valves 17 open for exhaust blowdown, shortly after low pressure air flows through air conduit 32 from conduit 106 and optional shut-off valve 33 and compressor 2 or alternatively through air conduit 15-B supplied by a pressure regulator valve 25 from compressed air line 15-A (as shown in Fig. 9, and Fig. 10), through an intake valve 16-B into the cylinder 7. Intake valve 16-B closes shortly after bottom dead center or, perhaps at bottom dead center. Exhaust valves 17 remain open during the first part of the compression (2nd) stroke of piston 22. The cylinder 7 is now efficiently scavenged by blowdown and by loop scavenging and at any point during the compression stroke, the cylinder 7, now filled with fresh air, the exhaust valves 17, 17' can close. But since a low compression ratio is desired, the exhaust valves 17, 17' can be held open until the piston has reached the point that is desired to establish the compression ratio. At, or after the time exhaust valves 17a and 17a' are closed, a secondary charge of high pressure, temperature adjusted air which has been compressed by a compressor(s) can be injected by intake valve 16-A into the same cylinder, after which intake valve 16-A closes. In addition, when very high torque and power is needed, the density of the secondary charge-air can be greatly increased by cutting-in compressor 2 or by increasing the speed of compressor 2, if already compressing, as in Fig. 9, directing more air through compressors 1 and/or 2 by valves 4 and/or 6, and by routing the charge wholly or in part through intercoolers 10, 11 and 12.

In this system, regardless of the point the exhaust valve is closed to establish the compression ratio, the primary fresh air charge trapped in the cylinder 7 will be lighter than normal and the compression ratio will be lower than normal, therefore, if needed, a highly compressed, temperature adjusted air charge can be injected at exhaust valve closure or later in the stroke, to provide a heavier than normal charge but with the temperature rise being restrained by the cooled

charge and the short compression stroke. This produces a greater than normal mean effective cylinder pressure when combusted for great torque and power but still with an expansion ratio greater than the compression ratio.

For light-load operation a shut-off valve, or a valve disabler 31 (in phantom) on the high pressure intake valve could temporarily restrain the intake air, or hold the valve 16-A closed. This would add to the fuel economy of the engine. Alternatively, if compressor 2 is not supplying air to conduit 32 and intake valve 16-B, during light-load operation the shutter valve 5 could be closed and the air bypass valve 6 can be opened so that air pumped by compressor 2 would be returned in part or wholly to the inlet conduit of the compressor 2 with little or no compression taking place there.

An ancillary automatic intake valve 26, Fig. 10, can be arranged, as shown in Fig. 10, to prevent any back-flow of charge-air into conduit 15-A if the cylinder 7 pressure should approximate or exceed the pressure in conduit 15-A during the compression stroke of piston 22 before the closure of intake valve 16-A.

Alternatively, the ancillary automatic valve 26 of Fig. 10 could be used to provide a constant or a variable pressure ratio in cylinder 7. In this case valve 16-A would be kept open to near top dead center and the closure time of valve 26 would be adjusted by the pressure differential in cylinder 7, controlled by valves 3, 4, 5 and 6 by compressor(s) output and by any throttle valve present. The automatic valve 26 could be of the spring-retracted disc type and could be fabricated of metal or ceramics.

Fuel can be carbureted, injected in a throttle body 56, shown in Fig. 15 through Fig. 17 and item 56 in Fig. 19 and Fig. 20, or the fuel can be injected into the inlet stream of air, injected into a pre-combustion chamber (similar to that seen in Fig. 21) or, injected through intake valves 16-A, or it may be injected

directly into the combustion chamber at point x during the exhaust-compression stroke, at the time or after the piston 22 has passed point x in the compression stroke. The fuel can also be injected later and in the case of diesel operation can be injected at the usual point for diesel oil injection, perhaps into a pre-combustion chamber or directly into the combustion chamber, perhaps as Fig. 21, or directly onto a glow plug. After the temperature-and-density-adjusting-air charge has been injected, if used, compression of the charge continues and with fuel present, is ignited at the opportune time for the expansion stroke. (The compression ratio is established by the displaced volume of the cylinder remaining after point x has been reached, being divided by the volume of the combustion chamber. The expansion ratio is determined by dividing the cylinders total clearance volume by the volume of the combustion chamber.)

Now the fuel-air charge is ignited and the power (2nd) stroke of piston 22 takes place as the combusted gases expand. Near bottom dead center of the power stroke the exhaust valve(s) 17, 17' open and the cylinder 7 is efficiently scavenged by blowdown and by loop scavenging at the end of the power stroke and largely during the piston 22 turnaround time.

It can be seen that the later the point in the compression stroke that point x is reached (the later the exhaust valve is closed), the lower is the compression ratio of the engine and the less the charge is heated during compression.

It can also be seen that the later the temperature-density-adjusting charge is introduced, the less work will be required of the engine to compress the charge, the later part of which has received some compression already by compressor 1 and/or by an ancillary compressor 2. In some cases where the load is light and fuel economy important the ancillary compressor could be bypassed with the secondary air charge perhaps eliminated temporarily and the total charge weight could be less than that of a conventional engine and with the extended expansion

ratio produce even better fuel economy.

During light-load operation of this 2-stroke cycle engine (Fig. 9 and Fig. 9-B) such as vehicle cruising or light-load power generation, the secondary air charge can be eliminated by disabling high pressure intake valve 16-A temporarily (several valve disabling systems Eton, Cadillac, etc.) or air can be shut off to intake valve 16-A and the engine still produce greater fuel economy and power with the air charge being supplied by compressor 2 or 1 through conduits 15-A, 110, 32 and intake valve 16-B.

The engine $100^{9\text{-}B}$ of Fig. 9-B

Fig. 9-B is a schematic representation of a six-cylinder reciprocating internal combustion engine $100^{9\text{-}B}$ which is for the most part identical to the engine 100^{9} of Fig. 9. The characteristics and operation and structure of the engine $100^{9\text{-}B}$ of Fig. 9-B are substantially similar to the engine 100^{9} of Fig. 9 and, except as necessary to point out specific points of distinction, such characteristics, operation and structure are not repeated here. Reference should be made to the sections on characteristics, structure and operations (both brief and detailed) previously presented with respect to the engine 100^{9} of Fig. 9.

The major point of distinction between engine 100^{9} and engine $100^{9\text{-}B}$ is that engine $100^{9\text{-}B}$ represents an embodiment of the engine 100^{9} wherein the compressors 1,2 are of alternate types. That is, in $100^{9\text{-}B}$, the primary compressor 1 is shown as a Lysholm rotary compressor (as opposed to the reciprocating-type compressor of engine 100^{9}) and the secondary compressor 2 is of the turbo-type (as opposed to the Lysholm-type of 100^{9}). Although conduit 32 from conduit 110 (designated as 106 in Fig. 9) and optional shut-off valve 33 is shown supplying intake valves 16-B of only two cylinders of the engine, it is understood that other intake runners (not shown) distribute air from conduit 110 to the remainder of the intake valves 16-B of the engine, or that conduit 32 supplies an "air box" or

manifolds which distribute the air to all of the intake valves 16-B.

Referring now to Fig. 10 there is shown the same engine and the same operating system as described for the engines of Fig. 9 and Fig. 9-B, but has an optional added feature in that the secondary intake valve 16-A has an ancillary valve 26 which is automatic to prevent charge-air back-flow from cylinder 7. This feature will prevent any back-flow from occurring during the compression stroke of the engine of this invention, should the cylinder pressure approximate or exceed the pressure in conduit 15-A before the intake valve 16-A was fully closed. (This optional automatic valve 26 could be of the spring-retracted disc type, or could be any type of one-way valve.) An automatic valve at this place could be used to regulate the pressure ratio in cylinder 7 during the compression of the charge. In this case intake valve 16-A could be kept open to near top dead center, valve 26 automatically closing the intake below valve 16-A during compression, ignition and power stroke of the charge. Furthermore, the use of automatic valve 26 would allow the pressure ratio of the engine to be adjusted by simply adjusting the pressure in conduit 15-A, with intake valve 16-A being kept open to near top dead center of piston 22. The ancillary valve 26, if present, would also impart a tangentially oriented swirl turbulence to the combustion charge as would also, shrouding of intake valve 16-A.

The engine 100^{11} of Fig. 11

Referring now to Fig. 11, there is shown a six cylinder reciprocating internal combustion engine 100^{11} with one atmospheric air intake, in which all of the cylinders 7a - 7f (only one (7f) of which is shown in a sectional view) and associated pistons 22a - 22f operate in a 2-stroke cycle and all power cylinders are used for producing power to a common crankshaft 20 via connecting rods 19a - 19f respectively. A primary compressor 1, in this figure a double-acting reciprocating type, is shown which, with an air conduits, as shown, supplies pressurized air to one or more cylinder intake valves 16a and 16b. A secondary

compressor 2 of the Lysholm type is shown in series with compressor 1. An air inlet 8 and associated inlet conduit and manifolds 13 and 14 supply air charge which has been compressed to a higher than atmospheric pressure, to a cylinder intake conduit 15 which supplies charge-air to two intake valves, which intake valves 16a and 16b operate independently of each other but open into the same cylinder. Intercoolers 10, 11 and 12 and control valves 3, 4, 5 and 6 are used to help control the air charge density, weight, temperature and pressure. The intake valves are timed to control the compression ratio of the engine. The combustion chambers are sized to establish the expansion ratio of the engine.

The engine 100 of Fig. 8, Fig. 9, Fig. 10 and Fig. 11 have cam shafts 21 fitted with cams and are arranged to rotate at engine crankshaft speed in order to supply one power stroke for each power piston for each crankshaft rotation.

The engine 100^{11} shown in Fig. 11 is characterized by a more extensive expansion process, a low compression ratio and capable of producing a combustion charge varying in weight from lighter-than-normal to heavier-than-normal and capable of selectively providing a mean effective cylinder pressure higher than can the conventional arrangement in normal engines, but having similar or lower maximum cylinder pressure. Engine control module (ECM) 27 and variable valves 3, 4, 5 and 6 on conduits, as shown, provide a system for controlling the charge pressure, density, temperature, and mean and peak pressure within the cylinder which allows greater fuel economy, production of greater power and torque at all RPM, with low polluting emissions for both spark and compression ignited engines. In alternate embodiments, a variable valve timing system with the ECM 27 can also control the time of opening and closing of the intake valves 16a or 16b or both, to further provide an improved management of conditions in the combustion chamber to allow for a flatter torque curve, and higher power, with low levels of both fuel consumption and polluting emissions.

Brief Description of Operation of engine 100^{11} shown in Fig. 11

The new cycle engine 100^{11} of Fig. 11 is a high efficiency engine that attains both high power and torque, with low fuel consumption and low polluting emissions.

The new cycle is an external compression type combustion cycle. In this cycle part of the intake air (all of which is compressed in the power cylinders in conventional engines) is compressed by an ancillary compressor. The temperature rise at the end of compression can be suppressed by use of air coolers, which cools the intake air, and by a shorter compression stroke.

During operation air is supplied to the power cylinder 7 at a pressure which has been increased by perhaps from one-third to several atmospheres, or greater through an air intake conduit 15. Valve 16b opens by pressure on the top of the valve stem from a very small lobe on cam 21-A for a short period of time near bottom dead center position of piston 22 in order to scavenge the cylinder and provide fresh charge-air. Exhaust valves 17, 17' open for exhaust blowdown slightly before intake valve 16b opens to admit scavenging air. The cylinder 7 is efficiently scavenged mostly during the turnaround time of piston 22. During the first part of the compression stroke, perhaps as early as 10-20° after bottom dead center of piston 22 position, the first intake valve 16b closes, at a later time the exhaust valve 17, 17' closes, at which point compression of the fresh air charge starts, which establishes the compression ratio of the engine. At the point the exhaust valves 17, 17' closes or any point later, the second intake valve 16a and perhaps 16b, by a second lobe 21-C is, preferably, opened to introduce more of the temperature and density adjusted charge, if needed.

An intake valve disabler 31 in Fig. 10 (there are several on the market, for example, Eaton Corp. and Cadillac) can disable intake valve 16a when light-load

operation does not require a high mean effective cylinder pressure. Alternatively, the air bypass valve (ABV) 6 is opened wholly or partially to re-circulate some or all of the charge-air back through the compressor 2 in order to relieve the compressor of compression work during light-load operation. Additionally, air bypass valve 4 can re-circulate part or all of the air pumped by compressor 1 on demand in order to reduce charge pressure and density.

One suggested, preferred method of operation of the new cycle engine 100^{11} is thus:

1. Intake air at greater than atmospheric pressure that has been compressed by at least one compressor and has had its temperature adjusted by bypass systems and charge-air coolers are introduced into the cylinder 7 through intake valve 16b which is opened by a very small lobe 21-D on cam 21-A at or near bottom dead center of piston 22 at the end of the power-stroke, as exhaust valve(s) 17a, 17a' have opened a little earlier (perhaps 40° before bottom dead center) for exhaust blowdown. The exhaust valve 17 remains open through bottom dead center for efficient scavenging of the cylinder 7 by blowdown and loop scavenging. Intake valve 16b closes as the fresh high-pressure charge very quickly scavenges the cylinder 7.

2. After the power stroke is complete the exhaust valves 17 are left open for a period of time after the piston has passed bottom dead center (with intake valve 16b now closed) in order to continue to scavenge the power cylinder with the fresh air charge and further, in order to establish a low compression ratio of the engine, the compression ratio being established by the displaced cylinder volume remaining at the point of the exhaust valve 17 closure being divided by the volume of the combustion chamber.

E-FILED
Thursday, 09 February, 2006 05:36:30 PM
Clerk, U.S. District Court, ILCD

3. With the cylinder 7 now filled with fresh air which is near atmospheric pressure, the compression (2nd) stroke continues and, at the point the exhaust valve is closed, compression begins for a small compression ratio. This makes it possible to lessen the temperature rise during the compression stroke. Compression continues, fuel is added, if not present, and the charge is fired at the appropriate point near top dead center and the power-stroke occurs.

4. (a) Alternatively, at any point deemed appropriate at the time or after the exhaust valve has closed and compression of the charge has begun, a secondary density and temperature-adjusted air charge can be injected through intake valve 16a and perhaps by a second lobe 21-C on cam 21-A, through intake valve 16b. Compression continues with the secondary air charge injection, fuel is added, if not present, the charge is ignited and combustion produces a large expansion of the combusted gases producing great energy. This energy is turned into high torque and power by the engine.

(b) When even greater power is required, the air charge can be increased in density and weight by being passed through one or more intercoolers and by increasing compressor speed or by cutting in a second stage 2 of auxiliary compression, Fig. 11. Alternatively, the timing of closing exhaust valve 17 and of the opening of intake valve 16a could be altered temporarily to close earlier and to open earlier, respectively, for a larger charge.

5. Near bottom dead center of the piston, exhaust valves 17, 17' open and the cylinder is scavenged by blowdown and by the air injected by primary intake valve 16b.

Detailed Description of the Operation of the engine 100^{11} of Fig. 11

Near the end of the power (1st) stroke of the piston 22, perhaps at about 40° before bottom dead center position of piston 22, the exhaust valves 17 open for exhaust blowdown, shortly after, high pressure air flows through air conduit 15 from manifold 13 and 14, as shown in Fig. 11, through an intake valve 16b into the cylinder 7, the cylinder 7 is scavenged, intake valve 16b closes. (Intake valve head 30 can be recessed as shown in Fig. 11 in order to form a pipe-like opening into cylinder 7 so that when the charge-air is highly compressed, and as much as 500-530 psi is feasible, the small lobe 21-D on cam 21-A of intake valve 16b lets in a small blast of the high pressure air which is directed downward for loop scavenging, during or just after piston 22 turnaround at bottom dead center piston position.) Exhaust valves 17 remain open during the first part of the compression (2nd) stroke of piston 22. The cylinder 7 is now efficiently scavenged by blowdown and by loop scavenging and at any point during the compression stroke, the cylinder 7, now being filled with fresh air, the exhaust valves 17, 17' can close. But since a low compression ratio is desired, the exhaust valves 17, 17' can be held open until the piston has reached the point that is desired to establish the compression ratio. At, or after the time exhaust valve 17 closed, a secondary charge of high pressure temperature adjusted air which has been compressed by compressor 1 and/or 2 can be injected by the second intake valve 16a and, if desired, by another lobe 21-C (in phantom) on the first valve 16b into the same cylinder. (When high torque and power is needed, the density of the charge-air can be greatly increased by increasing the speed of the primary compressor 1 or by cutting in another stage of compression, as in compressor 2, Fig. 11, and routing the charge through aftercoolers 10, 11 and 12. Also the speed of compressor 2 can be increased to shove in more charge on the back end.) Compression would continue, for a small compression ratio, fuel would be added, if not present, the charge would be ignited and the gases expanded against piston 22 for the power stroke.

For light-load operation, a shut-off valve (or a valve disabler 31 shown in Fig. 10 on the intake valve 16-A) could temporarily restrain the intake air, or hold the intake valve 16a closed. This would add to the fuel economy of the engine. Alternatively, during light-load operation the shutter valve 5 could be closed and the air bypass valve 6 opened so that air pumped by compressor 2 would be returned to the inlet conduit of the compressor 2 without any compression taking place. In the same manner valves 3 and 4 could return part of the air being pumped through back to the intake 106 of compressor 1.

The ancillary automatic intake valve 26, Fig. 10, which can be of the spring-returned disc type, can be arranged, as shown in Fig. 10, to prevent any back-flow of charge-air into conduit 15 if the cylinder pressure should equal or exceed the pressure in conduit 15 during the compression stroke of piston 22 before intake valve 16a had closed completely. (As in other engine designs herein presented, the optional automatic valve 26 shown in Fig. 10 can be utilized to control the pressure ratio of this engine. If the intake valve 16a is kept open to near top dead center, the closure of valve 26 and the pressure ratio of cylinder 7 would be controlled by control valves 3, 4, 5 and 6 and by compressor speed and by any throttle valve present.) Automatic valve 26 would seal the intake from conduit 15 during the last part of the compression stroke, ignition of the charge and during the power stroke.

Fuel can be carbureted, injected in a throttle body 56 in Fig. 15 through Fig. 17, and 56 in Fig. 19 and 20, or the fuel can be injected into the inlet stream of air, or injected into a pre-combustion chamber or, injected through intake valves 16a, 16b, (the latter during its second opening by lobe 21-C on cam 21-A), or it may be injected directly into the combustion chamber at or past point x in the exhaust-compression stroke. The fuel can also be injected later and in the case of diesel operation can be injected at the usual point for diesel oil injection, perhaps

into a pre-combustion chamber or directly into the combustion chamber or directly onto a glow plug. After the temperature-and-density-adjusting-air charge has been injected, if used, compression of the charge continues and with fuel present, is ignited at the opportune time for the expansion stroke. (The compression ratio is established by the displaced volume of the cylinder remaining after point x (at exhaust valve closure) has been reached, being divided by the volume of the combustion chamber. The expansion ratio is determined by dividing the cylinders total clearance volume by the volume of the combustion chamber.) Now the fuel-air charge has been ignited and the power stroke of piston 22 takes place as the combusted gases expand. Near bottom dead center of the power stroke, the exhaust valve(s) 17 opens and the cylinder 7 is efficiently scavenged, first by blowdown, then by loop scavenging by air from intake valve 16b at the end of the power stroke or shortly after.

It can be seen that the later the point in the compression stroke that point x (the later the exhaust valve is closed) is reached, the lower is the compression ratio of the engine and the less the charge is heated during compression.

It can also be seen that the later the temperature-density-adjusting charge is introduced, the less work will be required of the engine to compress the charge, the later part of which has received some compression already by compressor 1 and/or by an ancillary compressor 2. In some cases where the load is light and fuel economy important the ancillary compressor could be bypassed with the secondary air charge perhaps eliminated temporarily and the total charge weight could be less than that of a conventional engine.

Referring now to Fig. 12 there is shown a pressure-volume diagram for a high-speed Diesel engine compared to the engines of this invention, showing three stages of intercooled compression and a fourth stage of uncooled compression indicating a compression ratio of approximately 2:1, which arrangement is

suggested for optimum power, with efficiency for the engine of this invention. (The charts of Fig. 13 and Fig. 14 show some of the improvements of the engine of this invention over current heavy-duty 2-stroke and 4-stroke engines.)

There are several features that improve the thermal efficiency of the engine of this invention. Greater power to weight ratios will provide a smaller engine with less frictional losses. The extended expansion ratio results in higher thermodynamic cycle efficiency, which is shown in theoretical considerations. There are also definite efficiency gains in a "staged" compression process even with external compressors with associated piping, intercoolers and aftercoolers, etc. There is a very significant energy savings when air is compressed in intercooled stages. Less energy is used in compressing a charge to 500 psi in 2, 3 or 4 intercooled stages than is used to compress the hot charge to the same 500 psi in a conventional engine. A normal engine uses approximately 20% of its own energy produced to compress its own air charge. Calculations show a significant energy savings in an engine if the air is compressed in aftercooled stages. Compressing a charge in only two stages to 531 psi (a 13:1 compression ratio) reduces the energy used by 15.8% over compressing to the same 531 psi level in a single stage as does the Otto and the Diesel Cycle engines. Three stages of intercooled compression raises the savings to 18%. This is the ideal. Degradation from the ideal should not exceed 25% which leaves a 13.5% energy savings. This 13.5% energy savings times the 20% of a normal engine's power used for compressing its own charge, is a 2.7% efficiency improvement by the compression process alone. This is one of the advantages of this engine which adds to the other thermal efficiency improvements. The low compression ratio, along with the large expansion ratio provides improvements in efficiency, torque, power and durability while lowering polluting emissions.

Note 1 - In Fig. 12 the travel distance of the line for engine B on the horizontal coordinate indicates the theoretical volume at the greater density. The density is kept at that level at the actual combustion chamber volume (as shown by dashed line V) regardless of the density, by pumping in more charge at the back-side.

Referring now to Fig. 13, there is shown a chart which compares various operating parameters of the engine of this invention (B) with the operation parameters of a popular heavy-duty, 2-stroke diesel cycle engine (A).

The parameters shown for engine A are the normal operating parameters for that engine, e.g., compression ratio, combustion temperatures, charge density, etc. The parameters chosen to illustrate for engine (B) are given at two different lower "nominal" compression ratios with corresponding "effective" compression ratios, intercooled and uncooled, for two different levels of power output. The columns showing charge densities and expansion ratios indicate the improvements in steady state power density improvements for engine B even at a substantially lower nominal compression ratio and an effective compression ratio as low as 2:1 as shown in Fig. 10. The columns showing low temperatures at the end of combustion, and the column showing extended expansion ratios indicate much lower polluting emissions. Indicated power improvements of engine (B) over engine (A) even at the lower nominal compression ratio are no less than 50%.

Referring now to Fig. 14 there is shown a chart which compares the various operating parameters of the engine of this invention (B) with the operating parameters of a popular heavy-duty 4-stroke diesel engine (A).

When comparisons similar to those of Fig. 13 are made, steady state power and density improvements are much higher since engine (B) fires the denser charge twice as often as engine A for an indicated steady-state power

density improvement of 180% over engine (A).

Referring now to Fig. 15, there is shown a schematic drawing of an engine representing the engines of Figs. 5-7, and Figs. 9-10 with a separate air cooler 10 for ancillary compressor 2, with the primary compressor 1 supplying two manifolds 13 and 14 and having separate air coolers 11 and 12 and charge-air conduits 114 and 115, and having each manifold having three cylinder air intake runners 15a - 15c, 15d - 15f, respectively. The engine of Fig. 15 operates the same as the engines of Figs. 5-7 and Figs. 9-10 and here shows suggested valving positions for shutter valve and air bypass valves for supplying the manifolds 13 and 14 with an air charge optimum for light-load operation of the engine of Figs. 5-7 and Figs. 9-10. For light-load operation, the shutter valve 5 can be closed and the air bypass valve 6 of compressor 2 (if compressor 2 is not supplying primary air charge directly to conduit 32 and intake valve 15-B) can be opened fully or partially so that part or all of the intake air of compressor 2 can be returned to the intake of compressor 2 with little or no compression occurring there. Also, the shutter valve 3 of compressor 1 can be closed, passing the air charge away from the coolers 11 and 12, the air bypass valve 4 would be closed to prevent re-circulation of the now compressed and heated air back through compressor 1 and whose shutter valve 3 and air bypass valves are both directing the air charge uncooled into manifold 13 and 14 for a low density heated charge for light-load operation. Preferably compressor 2 would be kept operative in order to supply the primary air charge through conduits 110, 32 and intake valve 16-B for a more economical scavenging-charging system.

Referring now to Fig. 16, there is shown suggested valve positions for supplying manifolds 13 and 14 with an air charge optimum for medium-load operation for engines of Fig. 16 or for the engines of Figs. 5-7 and Figs. 9-10. For medium-load operation the shutter valve 5 of compressor 2 is closed and the air bypass valve 6 would be opened to pass the air charge uncooled and without

compression to the intake of compressor 1 where closed shutter valve 3 and closed air bypass valve 4 directs the air charge now compressed by compressor 1 past the intercoolers to manifolds 13 and 14 with the air compressed and heated by compressor 1, for medium-load operation.

Referring now to Fig. 17, there is shown a suggested scenario for providing the engine of Fig. 17 or for the engines of Figs. 5-7 and Figs. 9-10 with a high density air charge for heavy duty, high power output operation. Fig. 17 shows both shutter valves 3 and 5 open and both air bypass valves 4 and 6 closed completely so that the primary stage of compression is operative and a second stage of compression has been made operative for maximum compression of the charge and the entire air charge is being passed through the intercoolers 10, 11 and 12 to produce a cooled, very high density air charge to manifolds 13 and 14 and to the engines power cylinders for heavy-load operation. This produces a very high mean effective cylinder pressure for high torque and power with maximum cylinder pressure being the same as, or lower than that of normal engines.

Referring now to Fig. 18, there is shown a schematic drawing of an alternative type of auxiliary compressor 2' for the engines of Figs. 5-7 and Figs. 9-10 and for any other engine of this invention and a system of providing a system for cutting out the auxiliary compressor when high charge pressure and density is not needed. For relieving compressor 2' of work, (if the air compressed by compressor 2 does not go directly to conduit 32 and valve 16-B to supply the primary air charge) shutter valve 5 is closed and air bypass valve 6 is opened so that air pumped through compressor 2' can re-circulate through compressor 2, thus relieving the compressor of compression work.

Referring now to Fig. 19, there is shown a schematic drawing of the engines of Figs. 5-7 and Figs. 9-10, illustrating means of controlling charge-air density, temperature and pressure by varying directions of air flow through various electronic or vacuum operated valves and their conduits.

Fig. 19 also shows the various charge-air paths possible by using hollow arrows to indicate heated air paths and solid arrows to indicate the more dense intercooled air paths thereby indicating how charge-air temperatures can be thermastatically or electronically controlled by dividing the air charge into two different paths. Alternatively, all of the air charge can be directed past the air coolers or all can be directed through the air coolers, as shown in Fig. 19. Also, Fig. 19 shows how the pressure output of compressor 1 and compressor 2 can be varied by partially or fully opening air bypass valves 4 and 6 or by completely closing one or both of these control valves. An engine control module (ECM) 27 is suggested for controlling the various operating parameters of the engines of this invention.

Referring now to Fig. 20, there is shown is a schematic drawing depicting an alternate arrangement in which an electric motor 34 preferably drives the compressor(s) of any of the engines of the present invention.

Charge-air Cooler Bypass (ACB) "Shutter Valve" Control

In this section are described aspects of preferred control components which find application in connection with any of the engines (4-stroke and 2-stroke) of the present invention.

Outline: Valves 3 and 5 are charge-air-cooler bypass solenoid (ACB) valves. In charge-air cooler bypass control, the intake air is switched between two routes by valves 3 and 5, independently of each other: either (a) valve 5 directs the flow

from compressor 2 directly to the intake conduit of compressor 1 or (b) through the charge-air cooler 10 before flowing to the intake conduit of compressor 1. Valve 3 directs the flow from compressor 1 either (a) to the conduit 111/121/122 leading directly to the intake manifolds 13 and 14 or (b) it passes the air charge through charge-air coolers 11 and 12 before it flows to manifolds 13 and 14.

An engine control module (ECM) 27 can control the air cooler bypass valves 3 and 5. The bypass valves may be a shutter type valve to pass all or none of the air charge in either direction or valves 3 and 5 may be of a helical solenoid or other type of valve which can pass part of the air charge through bypass conduits 121 and 122 and part through air coolers 10, 11 and 12 for fine control of the temperature and density of the air charge. The ECM could receive signals from sensors such as an engine coolant sensor, a crankshaft position sensor, throttle position sensor, camshaft position sensor, a manifold absolute pressure sensor and a heated oxygen sensor.

Air Bypass Valve (ABV) Control

Outline: To provide optimum air charging pressure for differing engine operations conditions, the ECM 27 can send signals to control air bypass valves 4 and 6. These valves could be on-off solenoid valves, possibly vacuum operated, or they could be helical solenoids or other type of valve which could open part way or all way in order to re-circulate part or all of the air charge back through the inlets 110 and 8 of compressors 1 and 2 in order to reduce or eliminate entirely the pumping pressure of either compressor 1 or compressor 2, or both. Similar arrangements of air pressure control could be used for additional stages of air compression if additional stages are used.

The operation could be thus: The ABV valves 4 and 6 can be controlled by signals from the ECM 27 to control the opening angle of valves 4 and 6 to provide the optimum air charging pressures for various engine loads and duty cycles. When ABV 6 is opened partially some of the air pumped through compressor 2 is passed back into the intake 8 of compressor 2 to reduce compression pressure. When ABV 6 is opened fully all of the charge of compressor 2 is passed back through compressor 2, thus compressor 2 only pumps the charge through with no pressure increase. The system can work the same for valve 4 which could bypass some of the air charge pumped by compressor 1 back into the intake conduit 110 of compressor 1 in order to reduce air charge density.

With this arrangement, combined with the arrangement of ECM 27 control of charge-air cooler bypass system for variable valves 3 and 5, the temperature, density, pressure and turbulence of the charge-air can be managed to produce the desired power and torque levels and emissions characteristics in the power cylinder of the engine.

Engine conditions that could be monitored by ECM 27 in order to effect proper engine conditions in regard to control of ABV valves 4 and 6 could include a throttle position sensor (or fuel injection activity sensor), intake air temperature sensor at various points, manifold absolute pressure sensor, camshaft position sensor, crankshaft position sensor, exhaust temperature sensor, a heated oxygen sensor and/or other sensory inputs known to be used in internal combustion engines.

The ECM 27 can control both the shutter valves 3 and 5 and the air bypass valves 4 and 6 in order to maintain the optimum air charging density pressure and temperature at all engine operating duty cycles.

Alternate Combustion Systems

Referring now to Fig. 21, there is shown a schematic transverse view of a pre-combustion chamber 38', a combustion chamber 38, a piston crown 22 and associated fuel inlet 36, a sparking plug 37, an air or air/fuel mixture inlet 8' duct, intake valve 16, an exhaust duct 18' an exhaust valve 17 suggested for liquid or gaseous fuel operation for the engines of this invention or for any other internal combustion engine.

There are many choices of systems for compression or spark ignition combustion for the engine of this invention, as shown in Fig. 1 through Fig. 33. Every fuel from avgas to heavy diesel fuels, including the alcohols and gaseous fuels can be spark ignited (SI) in this engine. One good SI system would be similar to the system shown in Fig. 21 for compressed natural gas, propane, hydrogen, gasoline, alcohols or diesel fuel. In this system, an extremely fuel rich mixture constituting the entire fuel charge is, preferably, injected into the pre-combustion chamber 38'. The fuel could be injected through fuel duct 36 with or without air blast injection, the air charge, some of which can accompany the fuel charge would be compressed into the pre-combustion chamber 38' by piston 22 during the compression stroke. Additional air with or without additional fuel, could be introduced into the cylinder proper either on the intake stroke or on the compression stroke through intake conduit 8'. In either case the second combustion stage in the cylinder proper would be with a lean mixture.

The two-stage combustion system shown in Fig. 21 will operate in this manner:

1. **Pre-Combustion (first stage)**

   Pre-combustion occurs in the pre-combustion chamber 38' when fuel in an amount much in excess of the amount of oxygen present is injected and ignited (injector not shown). This oxygen deficiency along with the cooler, turbulent charge and lower peak temperatures and pressures greatly reduces

the formation of oxides of nitrogen. The combination of the hot pre-combustion chamber wall and intense turbulence promotes more complete combustion.

2. Post-Combustion (second stage)

Post-combustion takes place at lower pressure and relatively low temperature conditions in the space above the piston in the cylinder as the gases expand from the first stage pre-combustion chamber into the cylinder proper. If there is additional fuel in the cylinder proper, the leaner mixture is ignited by this plasma-like blast from the pre-combustion chamber. The low temperature and the admixture of burned gases prevent any further formation of oxides of nitrogen. Excess air, a strong swirling action, and the extended expansion process assure more complete combustion of carbon monoxide, hydrocarbons, and carbon.

The results of the engine of this invention using the pre-combustion chamber 38' of Fig. 21 are: higher thermal efficiencies due to the greater expansion, along with a cooler exhaust and a lower level of polluting emissions including oxides of nitrogen, and in addition for diesel fuels, lower aromatics and particulates.

Referring now to Fig. 22 there is shown a schematic transverse sectional view of an optional cylinder of the engine of this invention which will convert the 2-stroke engine of Fig. 8 through 33 to a one-stroke cycle engine and will convert the 4-stroke engines of Fig. 1 through Fig. 7 and Fig. 33 to operate in a 2-stroke cycle.

By building any 2-stroke engine with all power cylinders double acting, the power to weight ratio can be doubled over the basic engine. One end of the cylinder fires and the other end is scavenged on each stroke for a nominal one stroke cycle engine in the engines of Fig. 8 through Fig. 33. Use of double-acting

power cylinders in the 4-stroke engine of Fig. 1 through Fig. 7 and Fig. 33 converts the engine to a 2-stroke engine because one end of the cylinder is scavenged and one end is fired during each crankshaft rotation.

In the design of Fig. 22 needed variation of beam 39 length is accomplished by the beam end forming a scotch yoke 40 and fitting over the wrist pin 41 of the piston.

The double ended piston 22" can be linked to the end of a vertical beam 39 that pivots at the lower end 42. A connecting rod 19' is joined between the midpoint of the beam and the crankshaft 20'.

Since the crankshaft 20' itself does no more than transmit torque, its main bearings will be very lightly loaded. As a result little noise will reach the supporting casing. Because of the lever action, the crank (not shown) has half the throw of the piston stroke and can be a stubby, cam-like unit with large, closely spaced pins having substantial overlap for strength.

The compression ratio can be changed by slightly lengthening or shortening the effective length of the beam 39. This can be done by the lower pivot plate 42 being attached to a block 43 mounted slidably in a fixed block 44 and in which block 43 can be moved slidably by a servo motor 45. The gear 45a rotated by servo motor 45 is much longer than the gear 44a on the screw 43b which is rotatably attached to block 43 and rotates against threads in block 44, causing gear 44a to slide back and forth on gear 45a as block 43 reciprocates in block 44. Thus as a diesel, it could be started at 20:1 ratio and then shifted to a 13:1 ratio for less friction and stress on parts. This could also be important to allow use of alternate fuels.

Referring now to Fig. 23: These same advantages hold true for the alternate design (Figure 23) in which the pivot 47' is between the connecting rod 19 and the piston 22"

The needed variation of the length of the beam 39 (shown in phantom) connecting the piston 22" to the connecting rod 19 can be accomplished by forming a scotch yoke 40 on the beam end fitting over the wrist-pin 41 of the piston 22", or by placing a double pivoting link 42' between the pivot 47' on the fulcrum of beam 39' with the pivot 42" being attached to a non-movable part 46 of the engine and the terminal end of beam 39' being connected to connecting rod 19 by a pin 47.

Alternately and preferably, for heavy duty engines (marine propulsion, power production, etc.) the power take off of piston 22" could be with a conventional piston rod 39' being arranged between piston 22" and a crosshead 20' with a connecting rod 19' between the crosshead 20' and the crankshaft (not shown).

Double-acting power cylinders when used in the engine of this invention will be especially of importance where great power is desired and cooling water is readily available, e.g., for marine use or for power generation.

These double-ended, double-acting cylinders can be used in all of the designs of this invention.

Referring now to Figure 24: There is shown a schematic transverse sectional view of a crankshaft, two connecting rods 19' and 19" and a beam 39 showing a means of providing extra burn time of a conventional 2-stroke or 4-stroke engine.

This layout for any engine provides for double the piston 22' turnaround time of a normal engine during the critical burn period. This is because piston 22' top dead center (TDC) occurs at bottom dead center (BDC) of the crank 48. At this point, crankpin motion around piston 22' top dead center is subtracted from the straightening movement of the connecting rod 19', instead of being added to it as in conventional engines. Reversing the usual action slows piston travel around this point, resulting in more complete combustion and further reducing emissions.

The extra burn time provided by the design of Fig. 24 can be important in the engines of this invention and to any Otto or Diesel cycle engine.

Operation of the engine constructed and arranged with the additional burning time would be the same as the other engines of this invention providing high charge density, low compression-ratios with a mean effective pressure higher than conventional engines but with more combustion time than other engines while producing even less polluting emissions.

Since the crankshaft 48 in Fig. 24 itself does no more than transmit torque, its main bearings will be very lightly loaded. As a result little noise will reach the supporting casing. Because of the lever action, the crank can have as little as half the throw of the piston stroke (depending on the point of the fulcrum), and can be a stubby, cam-like unit with large, closely spaced pins having substantial overlap for strength.

This layout also provides for nearly twice the combustion time of a conventional engine during the critical burn period. This is because piston top dead center occurs at bottom dead center (BDC) of the crank.

The engine 100^{25} of Fig. 25

Referring now to Fig. 25 of the drawings, there is shown a six cylinder reciprocating internal combustion engine in which all of the cylinders 7a - 7f (only one (7f) of which is shown in a sectional view) and associated pistons 22a - 22f are adapted to operate in a 2-stroke cycle and all cylinders are used for producing power to a common crankshaft 20 via connecting rods 19a - 19f, respectively. A compressor 2 supplies air to scavenging ports 52 by way of optional shut-off valve 33-M and conduit 32 and to cylinder charge inlet valve(s) 16 and 16' by way of conduits 15. The engine of Fig. 25 is adapted to operate in a 2-stroke cycle so as to produce six power strokes per revolution of the crankshaft 20. To this end, compressor 1 takes in an air charge which may have been previously subjected to compressing to a higher pressure, via an admission control valves 5 and 6 through an intake conduit 110, leading from compressor 2 by way of intercooler 10 or bypass conduit 104 and shutter valve 5. During operation of the engine of Fig. 25, compressor 2 receives atmospheric air through inlet opening 8, pre-compresses the air charge into conduit 101 leading to control shutter valve 5 which in response to signals from the ECM 27, to shutter valve 5 and air bypass valve 6, will direct the compressed charge through intercooler 10 or through cooler bypass conduits 104 to compressor 1. The air charge is compressed within compressor 1 by its associated piston 131, and the compressed air charge is forced through an outlet into a high pressure transfer conduit 109 which leads to control shutter valve 3 which, if open, directs the air through intercooler 11 and 12 to manifolds 13 and 14 or, if closed, through a conduit and air bypass valve 4 which can direct part of the air charge back through inlet conduit 104 of the compressor 1, or valve 4 if fully closed, directs all of the charge from compressor 1, in response to signals from the engine control module (ECM) 27, through the intercoolers 11 and 12 or through the bypass conduit 111/121/122 into manifolds 13 and 14. Manifolds 13 and 14 are constructed and arranged to distribute the compressed air charge by means of branch conduits 15a - 15f to inlet valves 16 and 16' of the cylinder 7a, and to the remaining five power cylinders 7b-7f. In an

alternate embodiment, instead of providing scavenging air through conduit 32', scavending air is provided through shut-off valve 49 and conduit 50 and pressure reducing valve 25 to air box 51, through conduits 125a - 125f to scavenging ports 52a - 52f.

The engine 100^{25} shown in Fig. 25 has a camshaft which is arranged to be driven at the same speed as the crankshaft in order to supply one working stroke per revolution for the power pistons. The compressor can be reciprocating, comprised of one or more stages of compression with one or more double-acting cylinders, one is shown, 1 in Fig. 25. The compressor can be driven by associated connecting rods 19g to crankshaft 20 which can have throws of different lengths for different length piston strokes for the air compressor(s) than those of the power pistons. In addition, compressor 1 can be driven by a second crankshaft (not shown) which is driven by a gear meshing with a step-up gear mounted on the common crankshaft. The ancillary rotary compressor, a Lysholm type is shown 2, can be driven by a V-pulley being rotated by a ribbed V-belt and has a step-up gear arranged between the V-pulley and the compressor drive shaft. The rotary compressor 2 could also have a variable speed, or two speed drive, as in some aircraft engines.

The operation of engine 100^{25} shown in Fig. 25 is thus: Charge-air is inducted into the inlet opening 8 of compressor 2. From there it is pumped through the compressor 2 where it is directed by shutter valve 5 through the intercooler 10 or through a conduit to air bypass valve 6 where it is directed to the inlet of compressor 1. The charge is then pumped by compressor 1 through the outlet valve to shutter valve 3 which directs the air charge either through intercoolers 11 and 12, to manifolds 13 and 14 or into a conduit leading to air bypass valve 4 which can direct a part of the charge back through the inlet of compressor 1 or valve 4 directs the charge wholly or partially to the shutter valve 3 which directs the charge wholly or partially through intercoolers 13 and 14, or

directly to manifolds 13 and 14 which distributes the temperature-adjusted charge-air to cylinder 7 inlet valves 16 and 16' to each power cylinder of the engine. An off-and-on control valve (not shown) and conduit 32' directs air to air box 51 and to scavenging ports 52a - 52f in the bottom of cylinders 7a - 7f. In the alternates embodiment (shown in phantom in Fig. 25), the scavenging air is directed through pressure reduction valve 25, arranged on conduit 50 to provide and adjust scavenging air pressure from compression 1. Another option to reducing the manifold air pressure for scavenging the cylinders 7a - 7f is to use the manifold air through conduit 50, air box 51 and intake ports 52a - 52f without reducing the pressure from manifolds 13 and 14. The air would be used at full pressure for scavenging by the scavenging ports 52a - 52f in Fig. 25 and through inlet port 52" and exhaust port 52' in Fig. 30, which ports 52a-52f, 52' and 52" would be constructed much smaller than normally done. In this instance, although the scavenging ports were smaller-than-normal, the higher-than-normal pressure scavenging air would be very efficient. Several means of scavenging the cylinders are suggested herein. Fig. 26 illustrates more clearly (although in phantom) the preferred system of supplying low pressure scavenging air. Conduit 32' and valve 33 (shown in phantom in Fig. 26) channels air from conduit 110 from compressor 2 to conduit 50 which supplies scavenging air to air box 51.

The engine control module (ECM) 27 (see, for example, Fig. 26) controls valves 3, 4, 5, and 6 in order to adjust the pressure, temperature and density of the charge going to the combustion chambers and valve 25, and can selectively direct a portion, a portion at a reduced pressure of the air charge to scavenging ports 52 and can control valve 53 and valves 49' to open or close to select the mode of scavenging desired. The ECM can also control a variable-valve-happening control system to adjust the valve opening time and duration of opening time of inlet valves 16 and exhaust valves 17 in relationship to the degree or angle of rotation of crankshaft 20, in order to adjust the compression ratio of the engine for optimum performance in regard to power, torque, fuel economy, fuel

characteristics and to scavenging mode desired.

The preferred operation of the power cylinders shown in Fig. 25 is in this manner:

After blowdown and scavenging of the cylinder 7 has taken place the cylinder is now filled with fresh air, and piston 22 has closed exhaust ports 52 and the piston 22 is in its scavenging-charging stroke and is rising with the exhaust valve 17 still open, at any point, perhaps as early as 120 to 90 degrees before top dead center, the exhaust valve 17 is closed to establish the compression ratio and begin compression, intake valve 16, 16' are opened at that time or later in order to produce the desired charge density and weight desired, the compressed air charge or fuel air mixture is injected through intake valve 16, 16', intake valve 16, 16' is then closed. Compression of the charge which started at point X, the point where exhaust valve 17 was closed, continues with the compression ratio being established by the cylinder clearance volume remaining at point x, divided by the combustion chamber volume. Fuel can be injected into the secondary compressed air stream being injected into the combustion chamber or injected into a pre-combustion chamber (one is shown in Fig. 21) or may be injected directly into the combustion chamber. After the closure of intake valve 16, 16', the fuel or more fuel can be injected into the midst of the charge swirl for a stratified charge combustion process, or as in compression ignited engines fuel can be injected directly into the combustion chamber, perhaps directly onto a glow plug, if suggested pre-combustion chamber is used or not, and can be injected continuously during part of the expansion stroke for a mostly constant pressure combustion process.

The fuel-air mixture is ignited by spark plug, by compression ignition, or by glow plug at the point deemed most efficient, preferably before top dead center of the compression stroke of piston 22. The expansion stroke of piston 22 takes

place as the expanding gases force the piston toward bottom dead center. Near the end of the power stroke, perhaps about 40° before bottom dead center, scavenging ports 52 are uncovered, near the same time exhaust valve(s) 17 in the engine head are opened and a rapid blowdown and scavenging takes place in any of four ways as shown in Fig. 27, Fig. 28, Fig. 29 and Fig. 30. In any case the exhaust valves 17, 17' remain open past bottom dead center and for a significant part of the scavenging-charge-adjusting stroke in order to establish the engines compression ratio.

Referring now to Fig. 26, there is shown a schematic drawing showing an engine similar in structure and operation to the engine 100^{25} of Fig. 25, having two compressors, but differing in that compressor 1 is depicted as a Lysholm rotary compressor, and compressor 2 is depicted as a turbo compressor, and having one air cooler for the secondary compressor, two air coolers for the primary compressor, dual manifolds, with shutter controls, air bypass controls and conduits for different air paths. Also shown is an engine control module (ECM) 27 which can control charge and scavenging air pressures, density and temperatures in order to effect the desired output and emissions characteristics of the engine. Alternate sources of scavenging air are shown, the preferred one being from conduit 110 by way of conduit 32'. Air paths are shown by arrows, hollow arrows for uncooled compressed air and solid arrows for cooled denser air. Also shown are air bypass valves (in this case both closed) which, with the shutter valves (one of which is closed and one of which is partly open, the latter to allow cooling of part of the charge), can control the charge temperature, weight and density as required for best engine performance.

Referring now to Fig. 27, there is shown one system of efficient scavenging of the exhausted products of the engine of Fig. 25;

Scavenging System A (Fig. 27)

Blowdown of exhaust occurs at from about 40° before bottom dead center to perhaps 40-50° after bottom dead center, with exhaust valves 17 opening at approximately the same time the ports 52 are opened and remaining open after bottom ports are closed by piston 22, and closing later causing a low compression ratio.

Scavenging air can be supplied from a manifold with perhaps a pressure-reducing valve 25 on conduit 50 or, preferably scavenging air can be supplied from conduit 32' from ancillary compressor 2, (shown in phantom). In this case, bottom ports 52 open shortly before exhaust valves 17 open. Blowdown occurs through bottom ports 52 out through bottom exhaust conduit and valve 53 to main exhaust pipe 18, at same time or shortly after, exhaust valves 17 open and blowdown of the exhaust occurs both at the top of the cylinder through exhaust valves 53 and 17, and through exhaust manifold 18' and pipe 18 to the atmosphere. The exhaust valve 17 then stays open through a significant part of the 2nd or exhaust-charge stroke for additional scavenging, this part by positive displacement. During this scavenging-charging stroke the exhaust valve 17 may be closed at any point after the first 20 percent of piston 22 travel. Now at any point with cylinder 7 being now filled with fresh air, exhaust valve 17 can close and intake valve 16' open to admit pressurized air which has its temperature adjusted to what is deemed proper. The later in the exhaust-charging stroke the exhaust valve 17 is closed, the lower is the compression ratio of the engine established. If closed early enough the effective compression ratio can be as much as 13 or 16 to 1, if closed later the effective compression ratio can be as low as 2:1. At any point after exhaust valve 17 has closed, and the compression ratio has been established, and before piston 22 has reached top dead center, the air charge, with temperature density and pressure adjusted may be introduced by opening and then closing intake valve 16. All of the operating parameters

suggested would depend on the duty cycle of the engines, e.g., power requirements, efficiency, emissions considerations and the fuel used.

An engine control module (ECM) 27 is shown with connections to the critical control valves of the engine which can be adjusted according the conditions signaled to the ECM 27 from various sensors in the engine.

Referring now to Fig. 28, there is shown a second system of efficiently scavenging the engine of Fig. 25;

Scavenging System B (Fig. 28)

Exhaust blowdown occurs through exhaust valves 17 only, with scavenging air being supplied by compressor 2 by way of conduit 32', or alternatively from manifolds 13 and 14 through conduits 50 past control valve 49 and optional pressure control 25 into air box 51 and through scavenging ports 52 in the bottom of the cylinders 7, up through the cylinder 7, out exhaust valves 17 and through exhaust pipe 18, with valve 53 being closed. In this system as piston 22 approaches bottom dead center in the power expansion stroke, ports 52 would be uncovered by piston 22 and as blowdown occurs pressurized air would be injected through all bottom ports 52 and would sweep combusted products through exhaust valves 17 which open perhaps before ports 52 for the exhaust blowdown. The bottom ports can be constructed to open at perhaps 40° before bottom dead center and could close at the same point after piston begins its second stroke. The exhaust valves 17 could remain open after bottom ports 52 are closed to aid in scavenging by positive displacement by piston 22 and to establish the desired compression ratio which is established by the point at which exhaust valves 17 close.

During this scavenging-charging stroke of piston 22 the cylinder 7 being now filled with fresh air, the exhaust valve 17 may be closed at any point after the first 20 percent or so of piston 22 travel. Now at any point exhaust valve 17 can close and intake valve 16 can open to admit highly pressurized air which has its temperature and density adjusted to what is deemed proper. The later in the exhaust-charging stroke the exhaust valve 17 is closed, the lower is the effective compression ratio of the engine established. If closed early enough the effective compression ratio can be as much as 13 or 19 to 1, if closed later the effective compression ratio can be as low as 2:1. All of the operating parameters suggested would depend on the duty cycle of the engines, e.g., power requirements, efficiency and emissions considerations and the fuel used.

An engine control module 27 is suggested for use as shown for controlling the various operating conditions desired and as signaled from the engine's various sensors.

Referring now to Fig. 29, there is shown a third efficient system of scavenging the engine of Fig. 25;

Scavenging System C (Fig. 29)

This scavenging system would be that shut off valves 49' would be closed, (or valves 25 and 49 could be eliminated), with bottom ports opened to the atmosphere by valve 53, one inlet valve 16 leading from manifolds 13 and 14 to cylinder 7 could be opened for a very short period of time by a cam, perhaps by a small lobe on a cam that has a large lobe to open the same valve (as 21-C in Fig. 11) at a different crank angle, at the same time ports 52 were uncovered by piston 22 and exhaust valves 17 were opened. The high pressure air would quickly sweep combusted gases through ports 52 and exhaust valves 17, through their respective exhaust pipes 17 and 17' to the atmosphere. The intake valve 16 would

close quickly, no later than the time exhaust ports 52 closed. The exhaust valve would remain open for further scavenging and for the reduction of the compression ratio of the engine. Alternatively bottom exhaust valves 53 would be closed and as bottom ports 52 were uncovered by piston 22, exhaust valves 17 would also open earlier for blowdown, air from the airbox 51 supplied by conduit 32 would blow into ports 52 and scavenge the cylinder 7 through exhaust valves 17.

During this scavenging-charging stroke the exhaust valve 17 is closed at a point after the first 20 percent or so of piston 22 travel. At any point after exhaust valve 17 has closed, the cylinder 7 being now filled with fresh air, and the compression ratio having been established, and before piston 22 has reached top dead center, additional (secondary) air charge, with temperature density and pressure adjusted is introduced when needed by opening a second intake valve 16 and/or by another lobe 21-C on the same cam (see 21-C, Fig. 11) opening the same intake valve again. All of the operating parameters suggested would depend on the duty cycle of the engines, e.g., power requirements, efficiency and emissions considerations and the fuel used. The later in the exhaust-charging stroke the exhaust valve 17 is closed, the lower is the compression ratio of the engine established. If closed early enough the effective compression ratio can be as much as 13:1 or 22:1, if closed later the effective compression ratio can be as low as 2:1.

An engine control module could control all of the conditions required of the engine.

Referring now to Fig. 30, there is shown a fourth system of efficient scavenging the engine of Fig. 25.

Scavenging System D (Fig. 30)

In this system exhaust blowdown occurs through the top exhaust valves 17 and through part of the bottom scavenging ports 52' which open just before bottom dead center, perhaps 40°, and simultaneously with or just after the top exhaust valves open. At the time bottom ports 52' are opened, or shortly after, exhaust valves 17 are also opened, or, valve 53 leading to bottom exhaust line 18 is already open, and exhaust blowdown occurs over the next, 40° or so after bottom dead center, with scavenging air being injected through at least one of the bottom ports 52" which has been constructed to receive pressurized air from air box 55 supplied by conduit 32' or 50 at such a time the ports 52' are opened by piston 22 and the pressure in cylinder 7 has dropped below the pressure in air-box 55. After ports 52' are closed, exhaust valves remain open through a significant part of the second or exhaust-charge stroke of piston 22 for additional scavenging by positive displacement and in order to establish a low compression ratio.

During this scavenging-charging stroke the cylinder 7 being now filled with fresh air, exhaust valve 17 may be closed at any point after the first 20 percent or so of piston 22 travel. Now at any point exhaust valve 17 can close to establish the compression ratio and inlet valve 16 can open to admit a secondary pressurized air charge which has its temperature and pressure adjusted to what is deemed proper. The later in the exhaust-charging stroke the exhaust valve 17 is closed, the lower is the compression ratio of the engine established. If closed early enough the effective compression ratio can be as much as 13:1 or 22:1, if closed later the effective compression ratio can be as low as 2:1. All of the operating parameters suggested would depend on the duty cycle of the engines, e.g., power requirements, efficiency and emissions considerations and the type of fuel used, and can be controlled by an engine control module which receives signals relating conditions in certain engine areas and which are relayed to the ECM 27.

Referring to Fig. 31, there is shown a schematic drawing depicting an alternate arrangement in which an electric motor 34 preferably drives the air compressors of an engine similar to that of Fig. 25.

Referring now to Fig. 32, there is shown a schematic drawing showing the 2-stroke engine of Fig. 25 and Fig. 26 and having only one compressor 1 for supplying both scavenging and charge-air. Also shown are a shutter valve 3 and an air bypass valve 4, valves 16 and 17 controlling charge and scavenging air and valves 53 and 53' for releasing exhaust blowdown out of the cylinder bottom ports 52 through exhaust conduit 18 to the atmosphere. Thus the engine of Fig. 32 can perform all of the feats described for the engine of Fig. 25 and described for the engine of Fig. 25, Fig. 26, Fig. 27, Fig. 28, Fig. 29, Fig. 30 and Fig. 32. Also shown is an engine control module (ECM) 27, and connections to various valves in order to manage the charge and scavenging air temperature, density, weight and pressure, and the pressure and path of the scavenging air to achieve the desired results from the engine. Arrows show the paths possible for the heated (hollow arrows) air and the cooled (solid arrows), air, and for the charge-air to pass through the air bypass valve 4, all in order to adjust air pressure, density, weight and temperature for optimum engine performance.

The Engine 100[33] System of Fig. 33

Referring now to Fig. 33, there is illustrated a six cylinder internal combustion engine in which part of the cylinders 62 through 65 are used for producing power and two of the cylinders, cylinders 66 and 67, are used for compressing the air necessary to operate the engine. A supercharger 57, in this case preferably a Lysholm type, is used to boost the atmospheric pressure air received through air intake 8', before the air enters compressor cylinders 66 and 67. A shutter valve 3' and air bypass valve 4' re-circulate the charge-air back through compressor 57 when both are open, to lessen compressor work and

reduce charge densities for light-load operation. When air bypass valve 4' is closed shutter valve 3' can open or close to send the air charge to the cylinders cooled or uncooled, respectively, in order to manage combustion temperatures and temperatures for optimum performance.

The second stage of compression is transferred from compression cylinders 66 and 67 through conduits 201, 202 to shutter valve 4" which, when closed, sends the compressed charge through conduit 204 and intercooler 11 and conduit 205 to the engine manifold 58' in a cooled condition. If opened, shutter valve 4" directs the charge away from cooler 11 through conduit 203 and 205 to the power cylinders without cooling.

By having its camshaft arranged to rotate at one-half crankshaft speed, the engine 100^{33} operates in a 4-stroke cycle, with a low compression ratio, an extended expansion ratio and high mean effective cylinder pressure when operated in a manner just as described herein for the engine of Fig. 3.

Alternatively, the engine of Fig. 33, with one or more of its cylinders acting as compressor cylinders and having its camshaft arranged to rotate at crankshaft speed, operates in a 2-stroke cycle with the low compression ratio, high mean effective cylinder pressure and an extended expansion ratio when operated in the manner described herein for the engines of Fig. 8, Fig. 9 and Fig. 11.

Still referring to Fig. 33 of the drawings, additional fuel savings can be achieved in any of the engines of the present invention described hereinbefore by use of an economizer constructed as an air compressor retarder brake. For discussion of the disclosed retarder brake, this six-cylinder engine 100^{33} represents any of the engines of this invention which use externally compressed air (Fig. 1 through Fig. 33) to either fully supply charge-air or which use it to enhance engine performance. The air retarder brake illustrated has a compressor 57A

operatively connected to the drive shaft of the vehicle (not shown) or geared to the engines crankshaft 20 and stores energy produced during braking or downhill travel which is utilized to supply compressed air to the engine power cylinders via the transfer manifold 58. Such an economizer is coupled with an air reservoir 59 and during the time in which the economizer reservoir air pressure was sufficiently high for use in the power cylinders of the engine, the engine compressor can be clutchably disengaged or air pumped by the compressor(s) can be bypassed back to the inlet of the compressor(s) so that no compression work would be required of the compressor. A relief valve 60 prevents excess build up of pressure in the air reservoir. A valve 61 (being in this arrangement, a reversible one-way valve) allows air from the reservoir to be transferred to the manifold when the pressure in the reservoir 59 is higher than in the transfer manifold 58, if the air is needed. In the case of engine constructions having compression cylinders, each compression cylinder of the engine can also be deactivated during this reserve air operation time by shutting off the admission valve so that no net work would be done by the compressor(s) until the manifold-reservoir pressure dropped below operating levels. Several systems of deactivating cylinder valves are described in the art and/or have been mentioned previously.

In an alternate arrangement, the compressor 57A is eliminated and the air storage tank 59 is used to store excess air compressed by the compressor cylinders of the engine during braking and downhill travel. In this case, the valve 61 is a two-way valve and a blocking valve 70 is placed in the manifold 58 between the compressor cylinder(s) 66, 67 and the working cylinders 62-65. During downhill travel or during braking, the blocking valve 70 between compressor and working cylinders is, preferably, closed, power cylinders 62-65 are deactivated, and the two-way valve at 61 is utilized in order to divert the air compressed by the compressor cylinder(s) into storage tank 59.

When it is desired to operate the engine normally, the blocking valve 70 between the compressor and the expander cylinders is opened and the two-way valve 61 is closed. During reserve air operation, both the blocking valve 70 and the two-way valve 61 are opened. If desired, the compressor cylinder(s) 66, 67 are deactivated while in the reserve air operation mode, as described earlier. Also, a Jacob brake (a prior art retarder brake) could supply compressed air to the air reservoir tank.

Operating the engine on reserve air supply would improve the mean effective pressure (mep) of the engine for 20 percent improvement in power and efficiency, while reducing polluting emissions, during the time the engine was operating on the reserve air.

This feature would produce additional savings in energy especially in heavy traffic or in hilly country. For example, an engine producing 100 horsepower uses 12.7 pounds of air per minute. Therefore, if energy of braking were stored in the compressed air in the economizer reservoir 59, a ten or fifteen minute supply of compressed air can be accumulated and stored during stops and down hill travel. When the reservoir pressure drops below the desired level for efficient operation, a solenoid (not shown) is used to reactivate the compression cylinder valves and they (with the supercharger, when needed) will begin to compress the air charge needed by the engine.

Using the air reservoir 59, the engine needs no compression build-up for starting and as soon as the shaft was rotated far enough to open the intake valve, the compressed air and fuel would enter and be ignited for "instant" starting. Furthermore, the compressed air could be used to rotate the engine for this means of starting by opening intake valves earlier than usual to the expander cylinders to begin rotation and firing as is common in large diesel engines, thus eliminating the need for a starter motor. Alternatively, the compressed air could be used to

charge a "hydrostarter" to crank the engine as is common on some heavy-duty diesel engines.

In an alternate, and still preferred embodiment, the reserve air in reservoir 59 is additionally used to "motor" the engine to allow a vehicle such as a bus to pull away from a stop and operate fuelless for 30-60 seconds or more, which is the time that greatest pollution occurs in bus or stop-and-go delivery vehicle operation.

Remotely compressed air embodiments

Referring now to Fig. 34, there is seen a schematic representation of an engine 100 in accordance with an alternate embodiment of the present invention for externally providing charge-air for marine, locomotive, stationary, or electric power generating engines, or any engine applications of this invention, constant or variable load and speed, which have adequate electric power or waste or "bleed" air available. In Fig. 34, a remote electric air compressor 35 preferably with one or more intercooled compression stages, preferably supplies temperature conditioned charge-air (both high and low pressure, if needed) for one or more engines of this invention. The charge-air, conditioned in temperature and pressure, is supplied directly to manifolds 13 and 14 by conduit 15AE from compressor 35. The engine intake conduit 9 of, for example, Fig. 4, or low-pressure conduits 32 of other engines of this invention receive air from the atmosphere or alternatively receives low pressure air from a low pressure conduit 15BE from compressor 35.

An alternate arrangement, also depicted in Fig. 34, for providing combustion charge-air for any of the engines 100 of the present invention is to provide charge-air from conduit 15AR which supplies waste or "bleed" air produced in industrial processes. The air is supplied either at 1 or 2 pressure levels. The lower pressure, if needed, preferably is supplied by dropping the

pressure from the main incoming waste air conduit 15AR with a pressure regulator valve (25a leading to low-pressure conduit 15BR). The arrangement is similar to the arrangement of conduits 15-A, 15-B and valve 25 in, for example, Fig. 5, with conduit 15-A representing the supply conduit 15AR from the waste air supply, and with conduit 15-B representing conduit 15BR in Fig. 34.

The use of remotely compressed air, either waste air or from compressor 35, eliminates the engines compressors 1, 2 intercoolers 10, 11, 12, certain conduits and valves 3, 4, 5, 6 of the charge-air supply equipment, providing the air has been conditioned during or after the compression process (and prior to introduction to the manifolds 13, 14). Thus, the equipment of the engine 100 of the various embodiments shown throughout the various drawing figures of the engine 100 embodiments of this invention, is preferably eliminated up to those points designated by dashed lines A, B and C throughout the various drawings. The charge-air from either of the aforementioned remote sources is preferably introduced into the engines near the manifolds 13 and 14 and, in the appropriate embodiments, the low air pressure from the remote sources is introduced at conduit 32, as shown in Fig. 34.

In the remotely charged engines, the fuel can be carbureted prior to compression, can be throttle-body injected, port-injected, or directly cylinder injected.

Regarding Pollution Control

Referring now to Fig. 2 and Fig. 4-C there is shown a method of further reducing polluting emissions in any of the engine embodiments of this invention which includes re-burning a portion of the exhausted gases when and if required. In the 4-stroke engines of Figs. 1-Fig. 3 and in the 2-stroke engines herein depicted having a single air intake, the exhaust outlet conduit(s) 18 have a shunt conduit 202 (refer to Fig. 2) leading from a port 206 in the side of exhaust conduit

18 to a port 204 in the side of intake conduit 8. A proportioning valve 201 is situated at the intake port 204 and is arranged to selectively restrict the flow of fresh air into conduit 8, while at the same time opening the port 204 to the exhaust conduit to selectively allow entry of exhaust gases to the intake conduit 8. This valve is variable and mechanically, electrically or vacuum solenoid operated and preferably controlled by an engine control module (ECM) or control 144 in Fig. 35 and Fig. 36. This allows the re-burning of a portion of the exhausted gases, the amount of percentages thereof being adjusted by the engine control module in response to various sensors, such as an oxygen sensor, placed in strategic positions in the engine. Exhausted gases passing through conduit 202 can be cooled by either optional cooling fins 202a or by passing through an optional intercooler (not shown) before reaching the air intake conduit 8.

With reference to Fig. 4C, in engines having only one atmospheric intake conduit but having different air paths and conduits, such as conduits 15-A and 15-C of Fig. 4B, a shunt conduit 202' leading from the exhaust conduit 18 is divided into two shunt conduit portions 203a, 203b, each with a proportioning valve 209a, 209b operating so as to selectively admit exhausted gases to either or both of intake valve 16-B (through conduit 9 and eventually conduit 15-C) or to intake valve 16-A (by way of conduit 8 and conduit 15-A). Each proportioning valve 209a, 209b would allow either a portion or none of the exhausted gases to enter its respective port, meanwhile restricting entrance of fresh air if necessary. The exhausted gases can be cooled by optionally arranging fins 202a on conduit 202' and/or 203a, 203b and 203c or by passing the exhaust through an optional intercooler (not shown) before the gases are introduced into the air intake(s) of the engine.

Alternatively, as shown in phantom on Fig. 4C, one shunt portion 203a is diverted (shown as 203c) directly to conduit 15-C and provided there with a proportioning valve 209c.

In the engines of Fig. 4 and Fig. 7 having dual atmospheric air intakes 8, 9, an arrangement similar to that shown in Fig. 4C is utilized, it being understood, however, that conduit 8 is open to the atmosphere.

In any engines having dual air intake conduits or dual air paths a portion of exhausted gases can be introduced in any amount necessary, in from one to three points and controlled preferably by an engine control module (ECM) for better management of combustion and emissions characteristics.

This re-burn feature is of particular importance with diesel fuel operation.

Constant Load and Speed Engines

Whereas the preponderance of the foregoing specification describes embodiments and representative engines of the present invention which are optimized for vehicular (marine, truck, bus, automobile, tank, train and plane) duty cycles and describe systems and methods for varying power, torque and speed, the present invention finds useful application for obtaining high power and torque while maintaining optimum fuel economy and low polluting emissions in less complex engines, such as, for example, constant load and speed engines. Fig. 35 and Fig. 36 depict alternate embodiments of the present invention which embodiments are representative of constant load and speed engines (e.g., for electric power generation and in other stationary or industrial engine applications, e.g., for pumps and compressors) outfitted in accordance with the principles of the present invention.

The Engine of 100 System of Fig. 35

Referring now to Fig. 35 there is shown is a schematic presentation of an engine which represents any of the 4-stroke or 2-stroke engines of the present invention outfitted for constant load and speed operation. The basic components

of the engine 100, such as compressors 1, 2 and optional intercoolers 10, 11, 12 (shown in phantom) and their necessary associated conduits are, preferably, designed for optimum operating parameters having only the basic components. The various controls, shutter valves, air bypass valves and their associated bypass conduits such as those in previously described embodiments, are preferably eliminated in order to reduce weight, cost and complexity of operation. In Fig. 35, the engine 100 is shown as outfitted with a first ancillary compressor 1 and a second ancillary compressor 2, optional intercoolers 10, 11, 12 (shown in phantom) and interconnecting conduits, all operating as would be understood with reference to the previous detailed descriptions and operating with two stages of pre-compression of the charge-air, intercooled or adiabatically compressed.

Fig. 35 shows a preferred setup for power generation with any of the engines of this invention. The power output shaft 20 of the engine 100 is coupled schematically by line 140 to power input shaft 20" of generator 141 which has electric power output lines 142. As the shaft 20 of the engine 100 rotates the shaft 20" of generator 141, the amount of electric power produced by generator 141 is detected by sensor 143 and relayed to control unit and governor 144 which contains various relays and integrated circuits to quantify the power output and to send messages by line 145 to fuel/air control (not shown) on fuel line 148 and throttle 56, and/or by line 149 to spark control to advance or retard the spark in spark-ignited engines and/or to send messages through lines 146 and 146b for engines having fuel injection systems, e.g. for natural gas, gasoline or diesel fuel, or to fuel/air controls, all in order to control the fuel input, speed and output of engine 100 and hence the output of generator 141. Control unit 144 also sends signals to control the proportioning valve 201, shown in Fig. 4 and to proportioning valves 209a, 209b, 209c shown in Fig. 2 to control the amount, if any, of exhaust recirculated by these valves for re-burn in any engine of this invention utilizing this feature. Further explanation of the components and operation with the engine 100 of the present invention is deemed unnecessary as it

would be understood by those skilled in the art having reference to the present disclosure.

The optional intercoolers 10, 11, 12 (shown in phantom) are preferably used for gaseous or gasoline fueled engines and are preferably eliminated or reduced in number or cooling capacity in the compression-ignited engine, this being made possible by low peak pressures and temperatures in the engines of this invention.

Referring now to Fig. 36 there is shown an engine illustrated as a 2-stroke engine but representing any of the engines of the present invention, 2-stroke or 4-stroke, which is coupled schematically by line 140 with an electric generator 141. The engine and arrangements are similar in structure and operation as that shown and described for the engine of Fig. 35 with the exception that engine of Fig. 36, operating as either 2-stroke or 4-stroke cycle engine 100, has only a single stage of pre-compression, optionally intercooled by intercoolers 11, 12 (shown in phantom), of the charge air. As with the engine of Fig. 35, intercoolers 11, 12 are preferably eliminated or reduced in cooling capacity in compression-ignited versions of the engine 100 of this invention. Also, as with the engine 100 of Fig. 35, the governor, and other controls and the operation of the engine and generator would be understood by those skilled in the art having reference to the present disclosure.

It will be seen by the foregoing description of a plurality of embodiments of the present invention, that the advantages sought from the present invention are common to all embodiments.

While there have been herein described approved embodiments of this invention, it will be understood that many and various changes and modifications in form, arrangement of parts and details of construction thereof may be made

without departing from the spirit of the invention and that all such changes and modifications as fall within the scope of the appended claims are contemplated as a part of this invention.

While the embodiments of the present invention which have been disclosed herein are the preferred forms, other embodiments of the present invention will suggest themselves to persons skilled in the art in view of this disclosure. Therefore, it will be understood that variations and modifications can be effected within the spirit and scope of the invention and that the scope of the present invention should only be limited by the claims below. Furthermore, the equivalents of all means-or-step-plus-function elements in the claims below are intended to include any structure, material, or acts for performing the function as specifically claimed and as would be understood by persons skilled in the art of this disclosure, without suggesting that any of the structure, material, or acts are more obvious by virtue of their association with other elements.

What I claim is:

CLAIMS

1. An internal combustion engine, comprising:
an engine block defining at least one cylinder therein, an inlet port communicating between said cylinder and a source of air, and an exhaust port through which air is exhausted from said cylinder;
a piston movably mounted within said cylinder;
an intake valve selectively occluding said intake port;
an exhaust valve selectively occluding said exhaust port;
a compressor in fluid communication between said source of air and said inlet port,
whereby at least part of the intake air is selectively compressed by the compressor prior to entering the cylinder.

2. The engine of claim 1, further comprising at least one air cooler interconnected between said compressor and said inlet port.

3. The engine of claim 2, further comprising an air delivery network including:
conduit interconnecting said source of air, said compressor, said air cooler, and said inlet port; and
means for selectively controlling operation of said compressor to operate in either a compress mode generating a compressed air charge or a pass mode passing air therethrough without compressing.

4. The engine of Claim 3, wherein said air delivery network further includes means cooperating with said means for selectively controlling operation for selectively controlling the air charge characteristics selected from one or more of density, pressure, temperature, and the mean and peak pressure within said cylinder.

5. The engine of Claim 4, wherein both of said means for selectively controlling comprise a common plurality of valves strategically placed along said conduit and a common engine control mechanism controlling the operation of said valves.

6. The engine of claim 5, further comprising :
a second compressor in fluid communication between said compressor and said inlet port,
whereby at least part of the intake air is selectively compressed a second time prior to entering the cylinder; and
wherein said delivery network includes means for controlling the operation of said second compressor: and
wherein said means for selectively controlling the air charge characteristics cooperates with said means for controlling the operation of said compressor and with said means for controlling the operation of said second compressor for selectively controlling the air charge characteristics selected from one or more of density, pressure, temperature, and the mean and peak pressure within said cylinder.

7. The engine of Claim 1, wherein said compressor is a reciprocating compressor.

8. The engine of Claim 7, wherein said reciprocating compressor includes a piston connected to the engine crankshaft.

9. The engine of Claim 1, wherein said compressor is a rotary compressor.

10. The engine of claim 1, further comprising :
a second compressor in fluid communication between said compressor and said inlet port,
whereby at least part of the intake air is selectively compressed a second time prior to entering the cylinder.

11. The engine of Claim 10, wherein said engine block defines a second inlet port opening to said cylinder, and wherein said engine further comprises:
at least one an air cooler;
an air delivery network including:
conduit interconnecting said source of air, said compressor, said second compressor, said air cooler, said inlet port and said second inlet port; and
means for selectively controlling operation of said compressor to operate in either a compress mode generating a compressed air charge or a pass mode passing air therethrough without compressing.
means for selectively controlling operation of said second compressor to operate in either a compress mode generating a compressed air charge or a pass mode passing air therethrough without compressing.
means for selectively directing a compressed air to said first inlet port and uncharged air to said second inlet port.

12. In an internal combustion engine having a crankshaft driven by at least one piston moving through at least a compression stroke and an expansion stroke aided by combustion taking place within a cylinder, wherein the compression stroke results in the compressing of air and gaseous fuel within the cylinder, the improvement thereto comprising:
an external compression stage in which an air charge is compressed outside the cylinder; and delivery conduit linking said compression stage

E-FILED
Thursday, 09 February, 2006 05:37:28 PM
Clerk, U.S. District Court, ILCD

to the cylinder.

13. The improvement of Claim 12, further comprising an intercooler through which said air charge is selectively directed from said external compression stage.

14. The improvement of claim 12, further comprising a second external compression stage in which said air charge is compressed a second time outside the cylinder.

15. A method of operating an internal combustion engine having a crankshaft driven by at least one piston moving through at least a compression stroke and an expansion stroke aided by combustion taking place within a cylinder, wherein the compression stroke results in the compressing of air and gaseous fuel within the cylinder, said method comprising the step of managing air charge densities, temperatures, pressures, and turbulence.

16. The method of claim 15, wherein the managing step includes at least the steps of compressing an air charge prior to the compressing within the cylinder, thus generating a pre-compressed air charge.

17. The method of claim 16, wherein the managing step further includes at least the step of selectively channeling the pre-compressed air charge through a cooling device prior to delivery to the cylinder.

18. The method of claim 17, further comprising the step of providing a compression ratio lower than the expansion ratio of the engine.

19. A method of operating an internal combustion engine, said method comprising the steps of:

(i) producing an air charge;

(ii) controlling the temperature, density and pressure of the air charge;

(iii) transferring the air charge to a power cylinder of the engine such that an air charge having a weight and density in a range ranging from below atmospheric weight and density to a heavier-than-atmospheric weight and density is introduced into the power cylinder;

(iv) then compressing the air charge at a lower-than-normal compression ratio;

(v) causing a pre-determined quantity of charge-air and fuel to produce a combustible mixture;

(vi) causing the mixture to be ignited within the power cylinder; and

(vii) allowing the combustion gas to expand against a piston operable in the power cylinder with the expansion ratio of the power cylinders being substantially greater than the compression ratio of the power cylinders of the engine,

20. The method of claim 19, further comprising the steps of: repeating steps (i) through (vii); and periodically selectively varying the weight and density of the air charge from one transferring step to another transferring step.

21. The method of claim 19, further comprising the steps of: repeating steps (i) through (vii); and maintaining the weight and density of the air charge at substantially the same pre-selected weight and density during each of the repeated transferring steps.

22. An internal combustion engine, comprising:

at least one ancillary compressor for compressing an air charge;

an intercooler through which the compressed air is selectively directed for cooling;

a plurality of power cylinders in which the combustion gas is ignited and expanded;

a piston operable in each power cylinder and connected to a crankshaft by a connecting link for rotating the crankshaft in response to reciprocation of each piston;

a transfer conduit communicating the compressor outlet to a control valve and to said intercooler;

a transfer manifold communicating the intercooler with the power cylinders through which manifold the compressed charge is transferred to enter the power cylinders;

an intake valve controlling admission of the compressed charge from the transfer manifold to said power cylinders; and

an exhaust valve controlling discharge of the exhaust gases from said power cylinders.

23. A method of operating an internal combustion engine, said method comprising the steps of repeatedly compressing air charges within a cylinder of the engine and producing mean effective cylinder pressure within the cylinder which mean effective cylinder pressures range over time from lower-than-normal to higher-than-normal.

24. The method of claim 23, wherein the maximum cylinder pressure remains below normal.

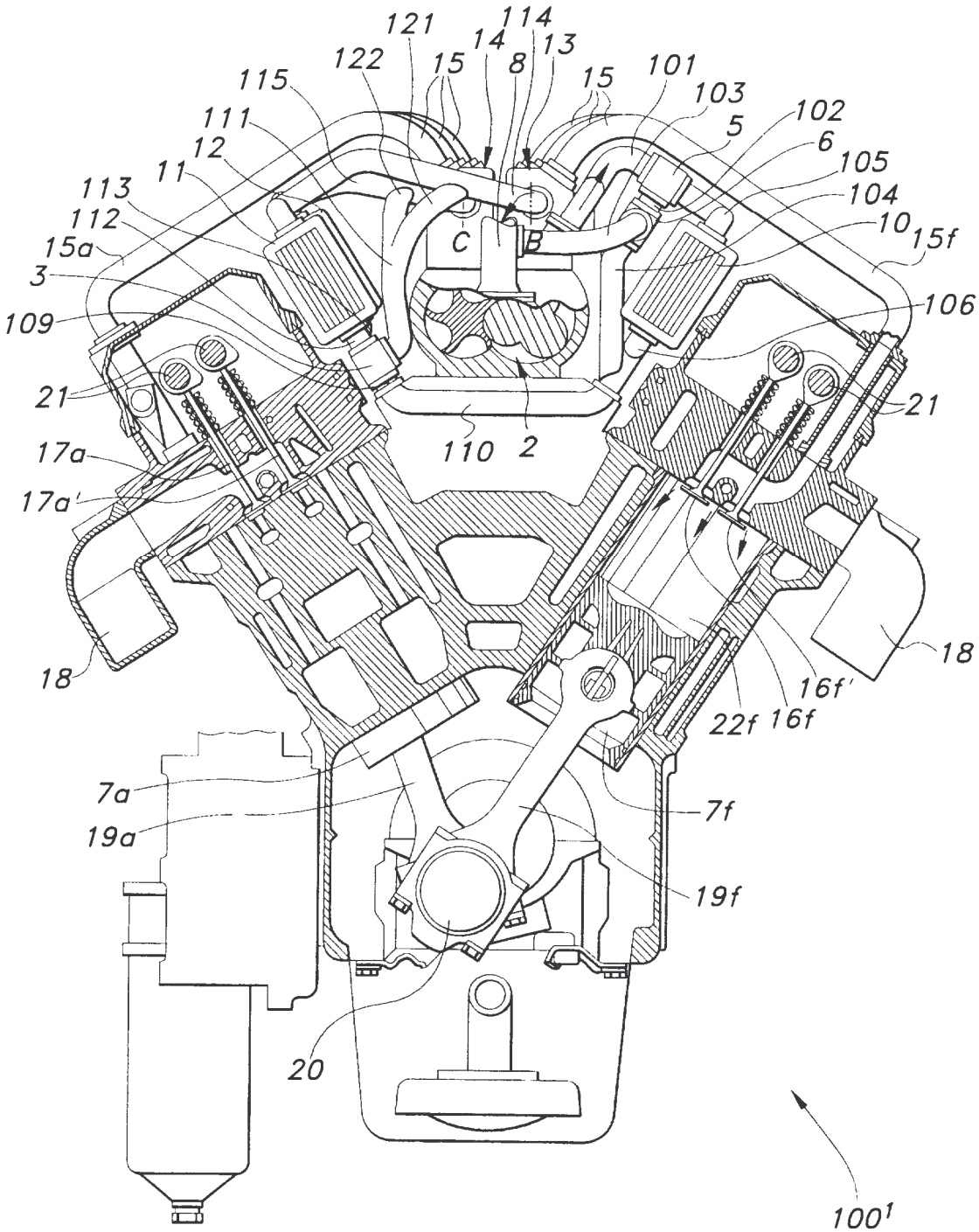
121
114
14
13
122
15
8
15
101
115
103
111
102
5
12
6
11
105
113
104
112
10
15a
15f
C
B
3
106
109
21
21
110
2
17a
17a'
18
18
16f'
22f
16f
7a
7f
19a
19f
20
100'

FIG 1

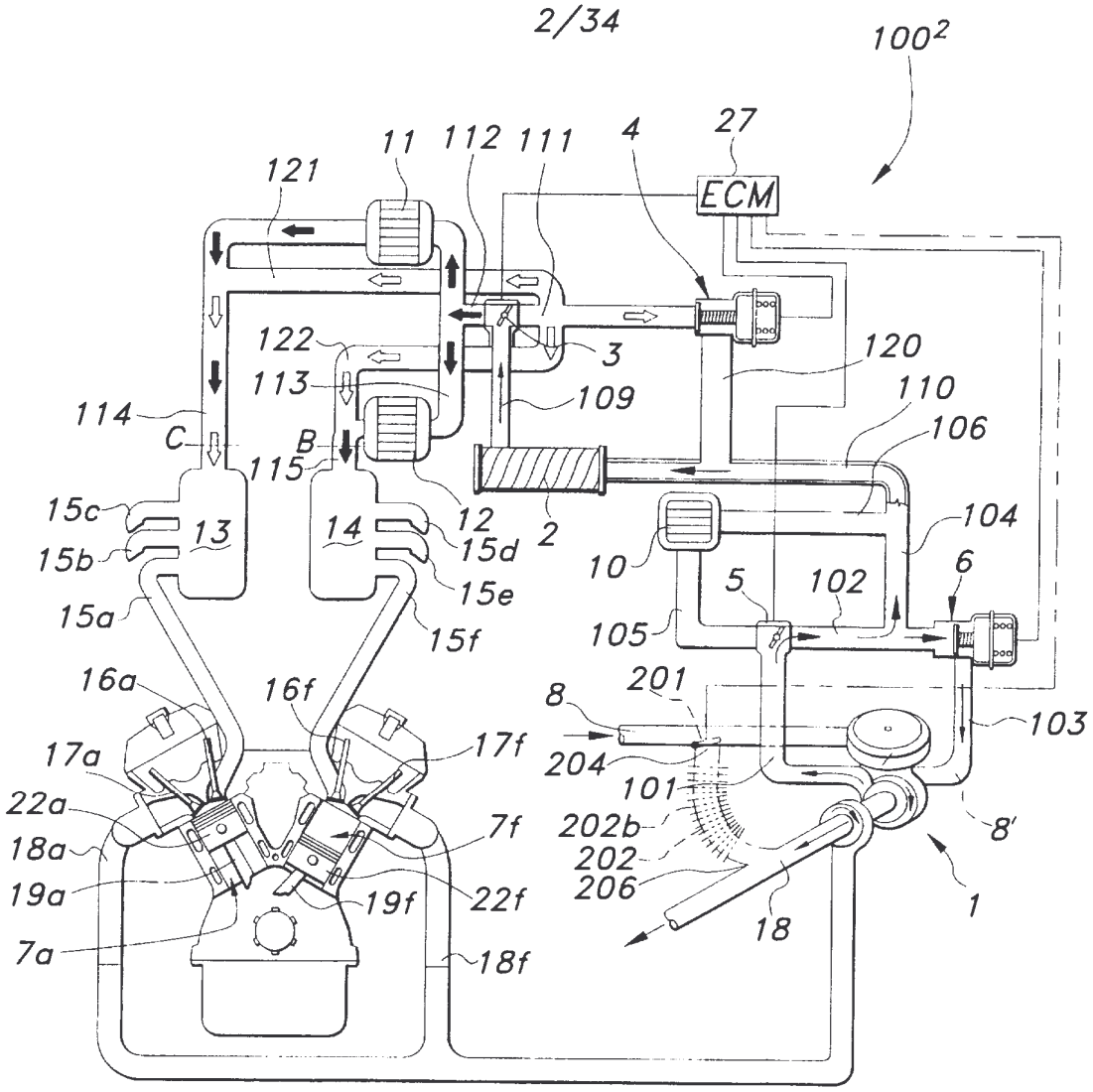
100²
ECM
11
112
111
4
27
121
122
113
3
109
120
110
106
114
C
B
115
15c
13
14
12
15d
2
104
15b
15e
10
5
102
6
15a
15f
105
16a
16f
201
8
103
17a
17f
204
101
22a
7f
202b
8'
18a
202
19a
19f
22f
206
1
7a
18f
18

FIG 2

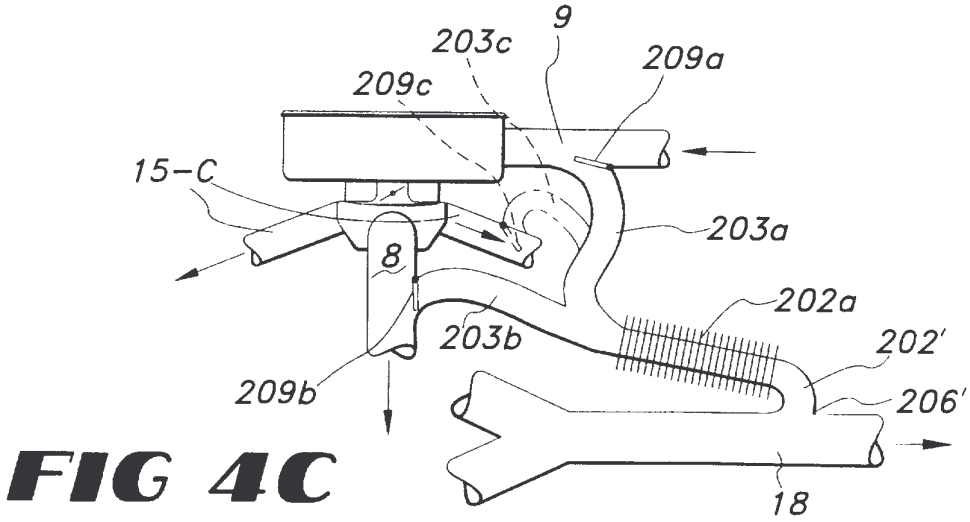
9
203c
209a
209c
15-C
203a
8
202a
203b
202'
209b
206'
18

FIG 4C

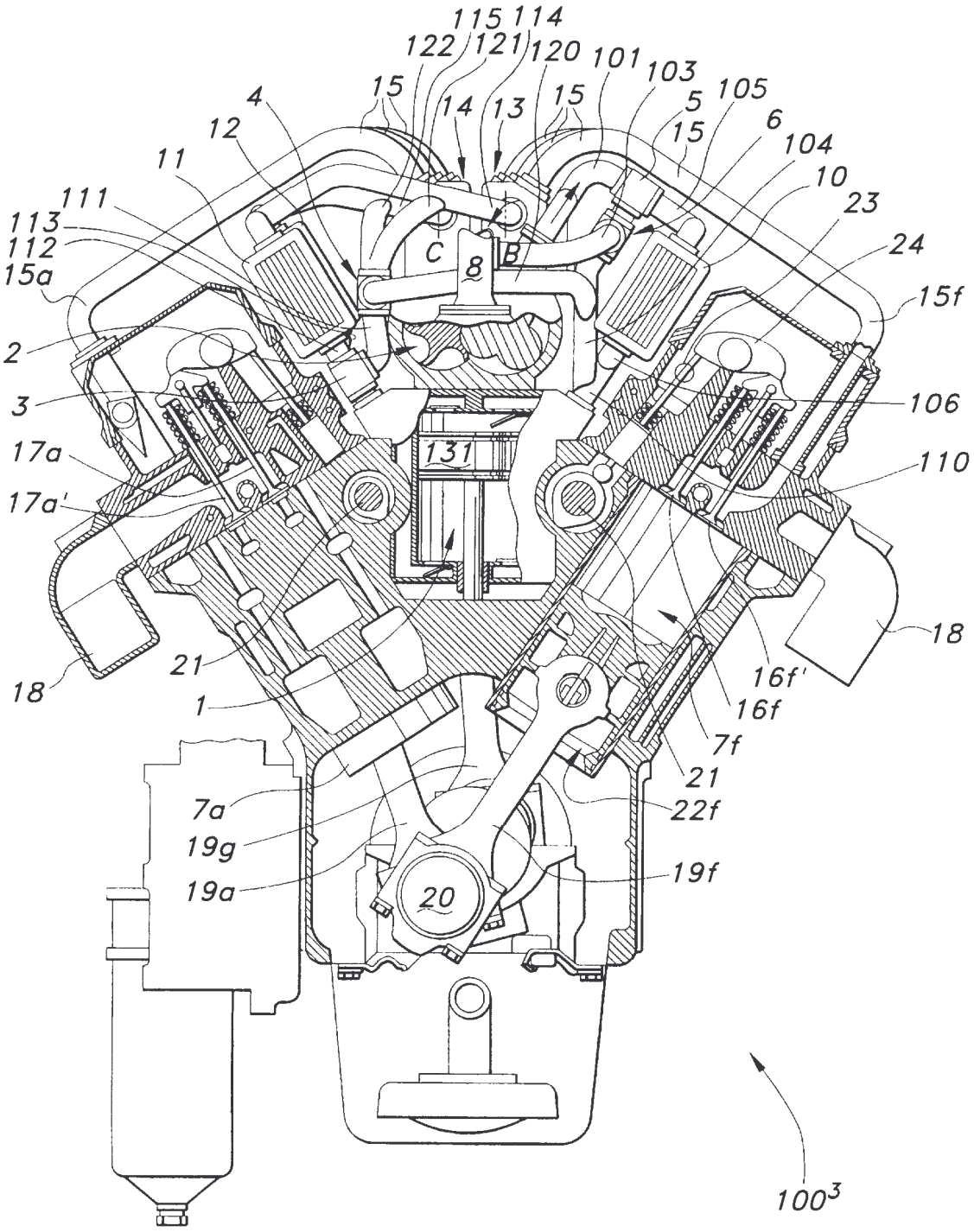
115
114
122
121
120
101
103
105
15
14
13
15
5
15
6
104
4
12
11
10
23
24
111
113
112
15a
C
8
B
15f
2
3
106
131
17a
17a'
110
18
21
1
16f'
16f
7f
21
22f
7a
19g
19a
20
19f
18
100³

FIG 3

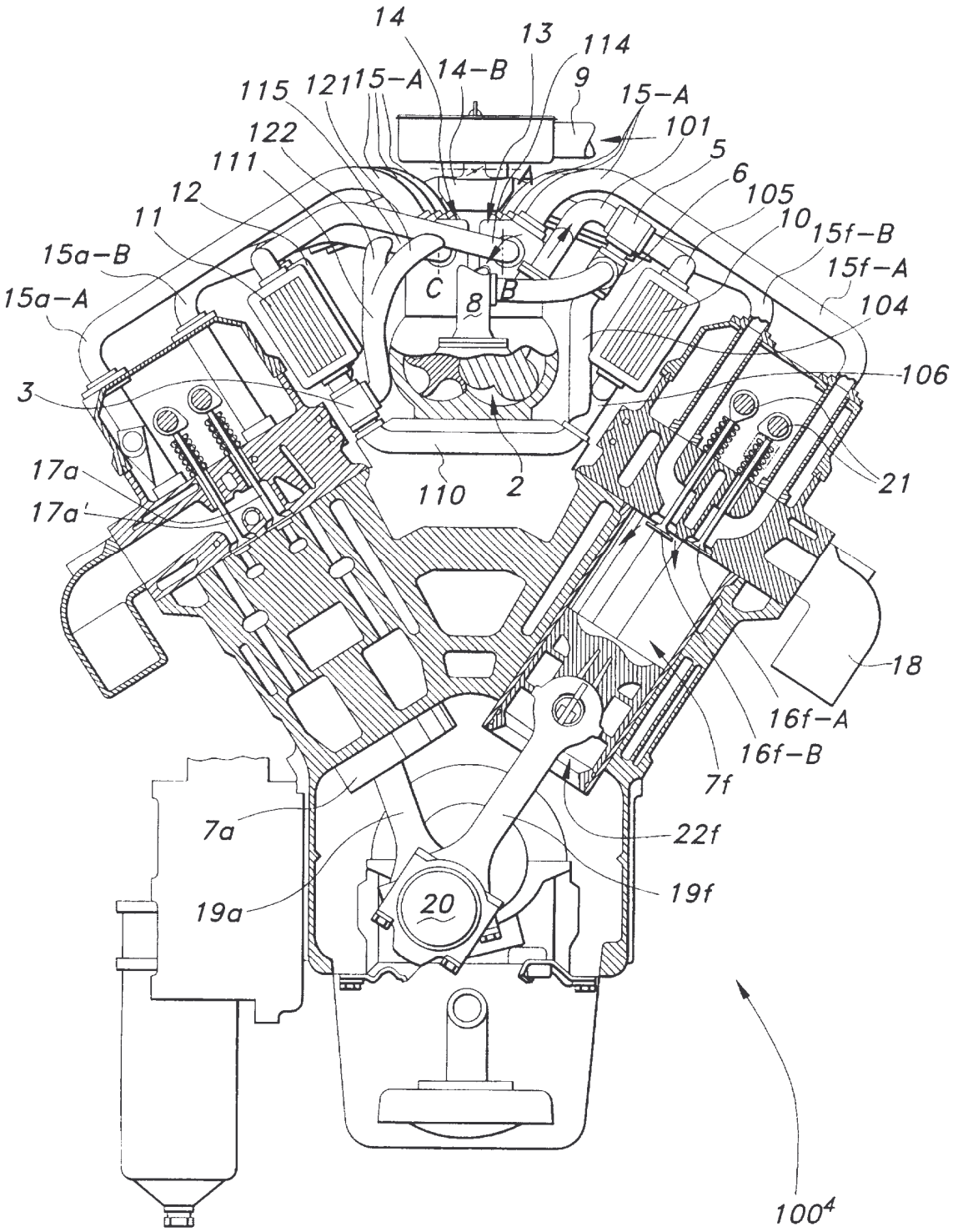
14
13
114
9
15-A
14-B
115
121
15-A
122
111
101
5
6
105
12
11
10
15f-B
15a-B
15f-A
15a-A
C
8
B
104
106
3
17a
17a'
110
2
21
18
16f-A
16f-B
7f
7a
22f
19a
20
19f
100⁴

FIG 4

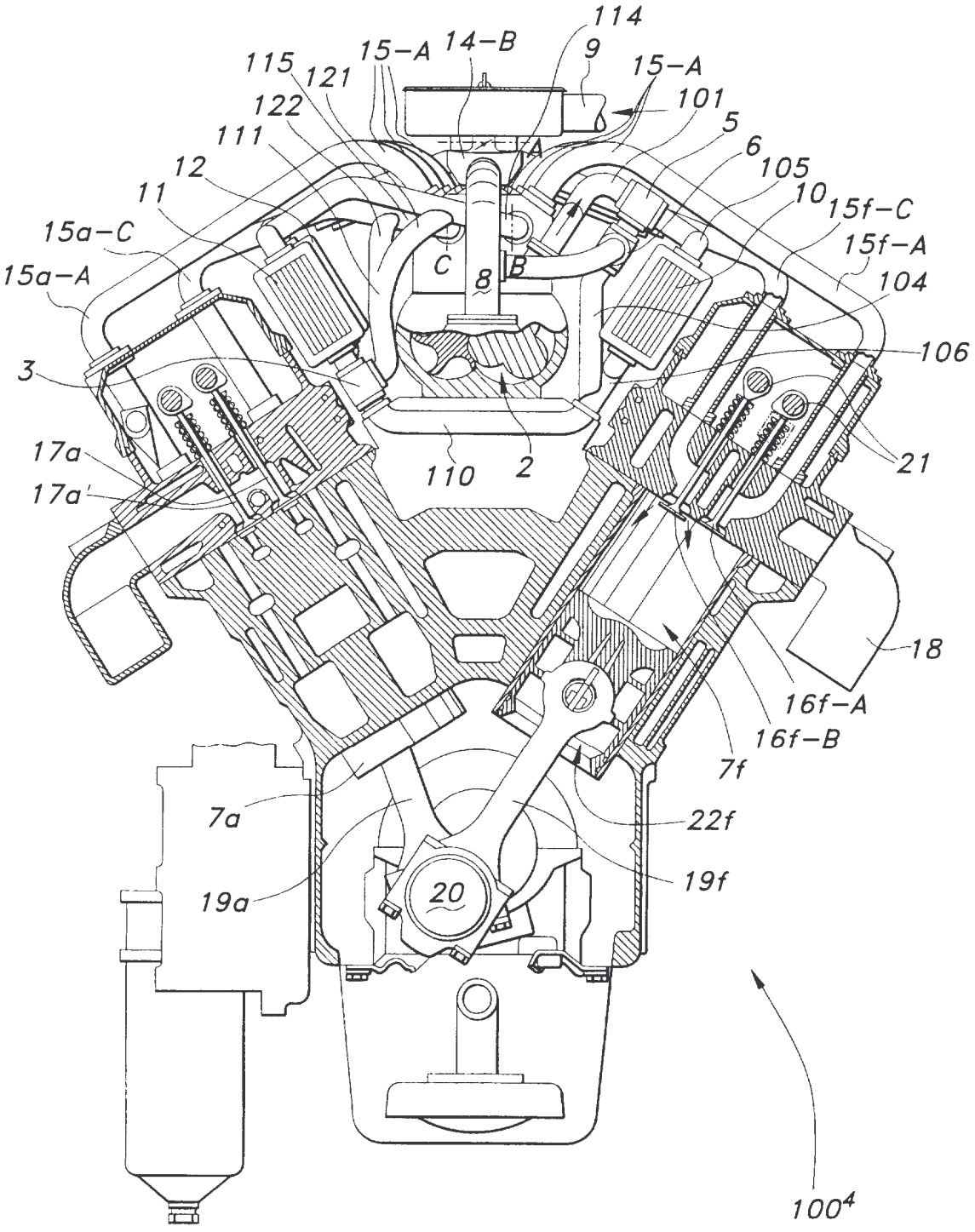
114
9
15-A
14-B
15-A
115
121
122
111
101
5
6
105
12
11
10
15f-C
15a-C
15f-A
15a-A
C
8
B
104
106
3
17a
17a'
110
2
21
18
16f-A
16f-B
7f
7a
22f
19a
20
19f
100⁴

FIG 4B

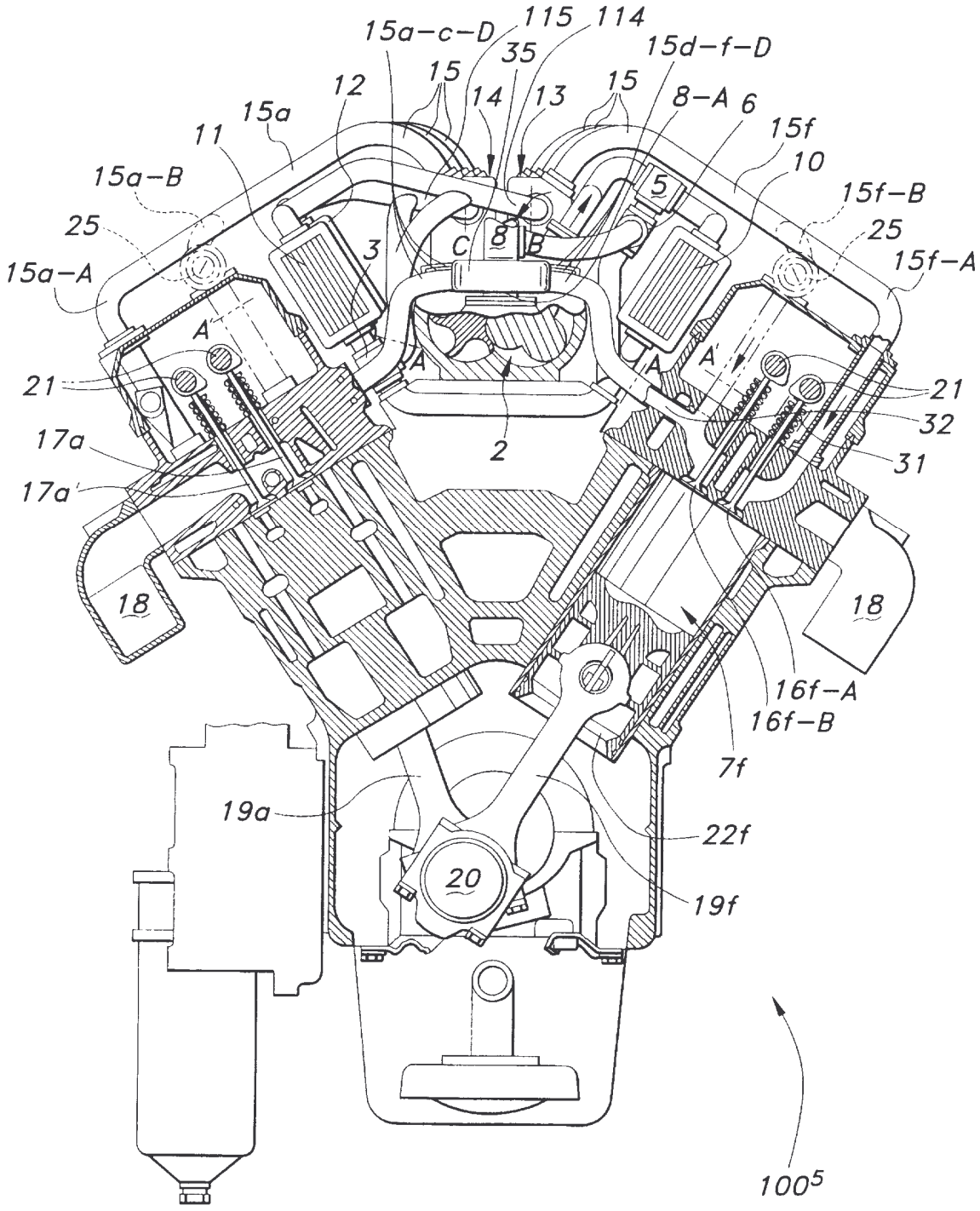
15a-c-D
115
114
15d-f-D
35
15
12
14
13
15
8-A
6
15a
11
15f
10
15a-B
5
15f-B
25
3
C
8
B
25
15a-A
15f-A
A
A
A
A
21
21
32
17a
2
31
17a
18
18
16f-A
16f-B
7f
19a
22f
20
19f
100

FIG 5

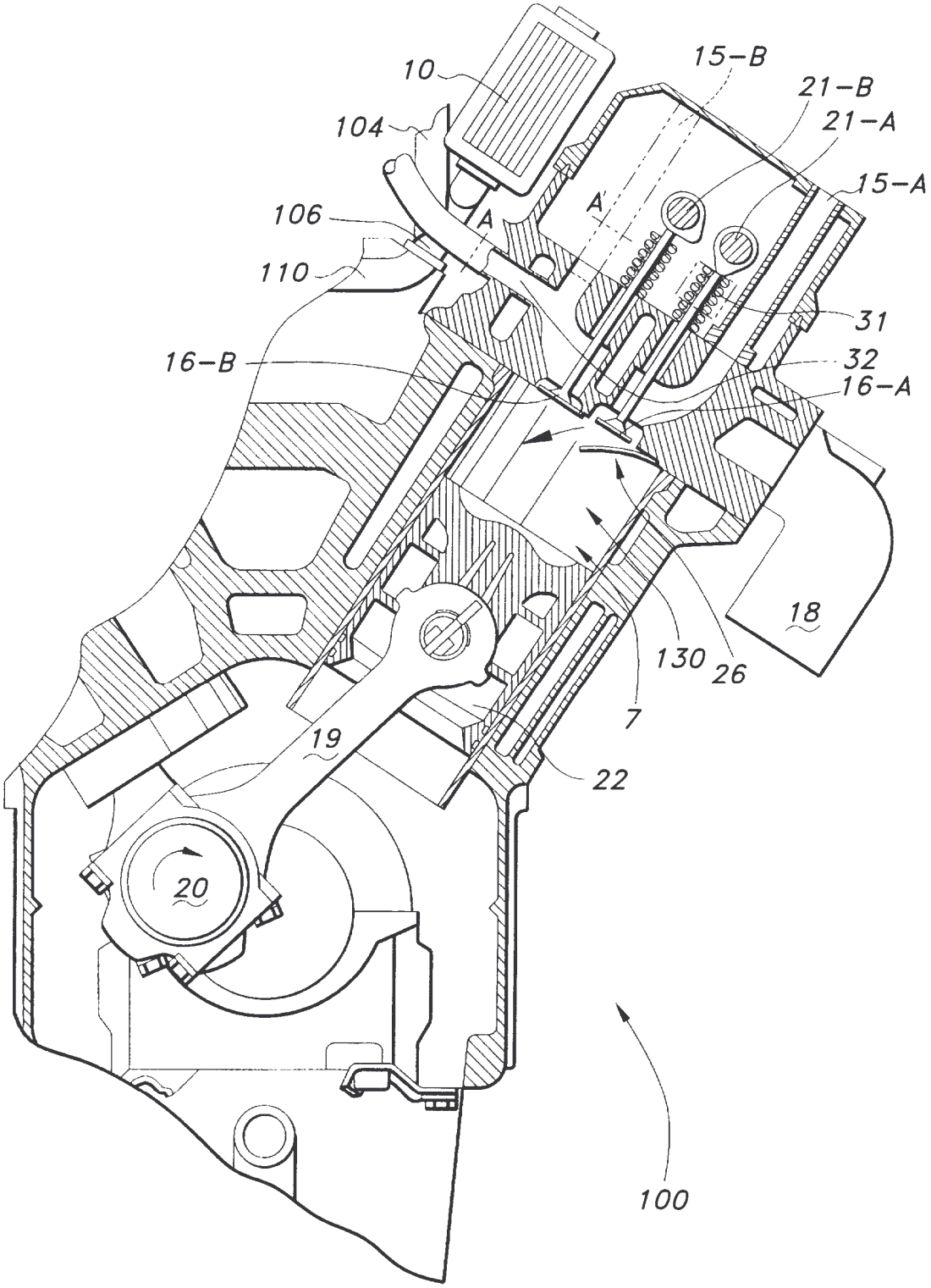
10
104
106
110
16-B
15-B
21-B
21-A
15-A
A
A'
31
32
16-A
18
130
26
7
19
22
20
100

FIG 6

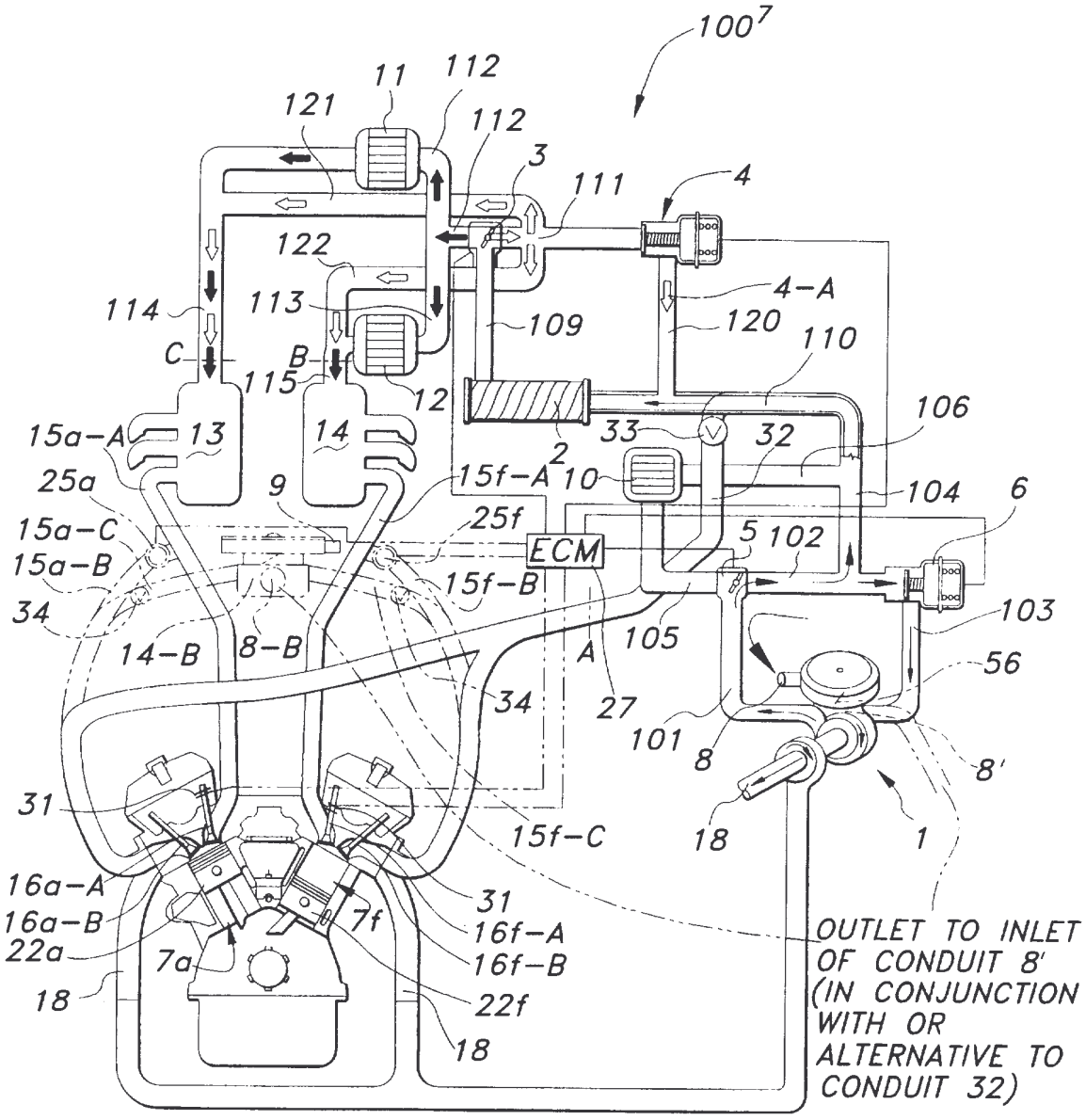
100
11
112
121
112
3
111
4
122
4-A
114
113
109
120
110
C
B
115
12
106
15a-A
13
14
33
32
2
25a
9
15f-A
10
104
6
15a-C
25f
ECM
5
102
15a-B
15f-B
103
34
14-B
8-B
A
105
56
34
27
101
8
8'
31
15f-C
18
1
16a-A
16a-B
22a
7a
7f
31
16f-A
16f-B
22f
18
18
OUTLET TO INLET OF CONDUIT 8' (IN CONJUNCTION WITH OR ALTERNATIVE TO CONDUIT 32)

FIG 7

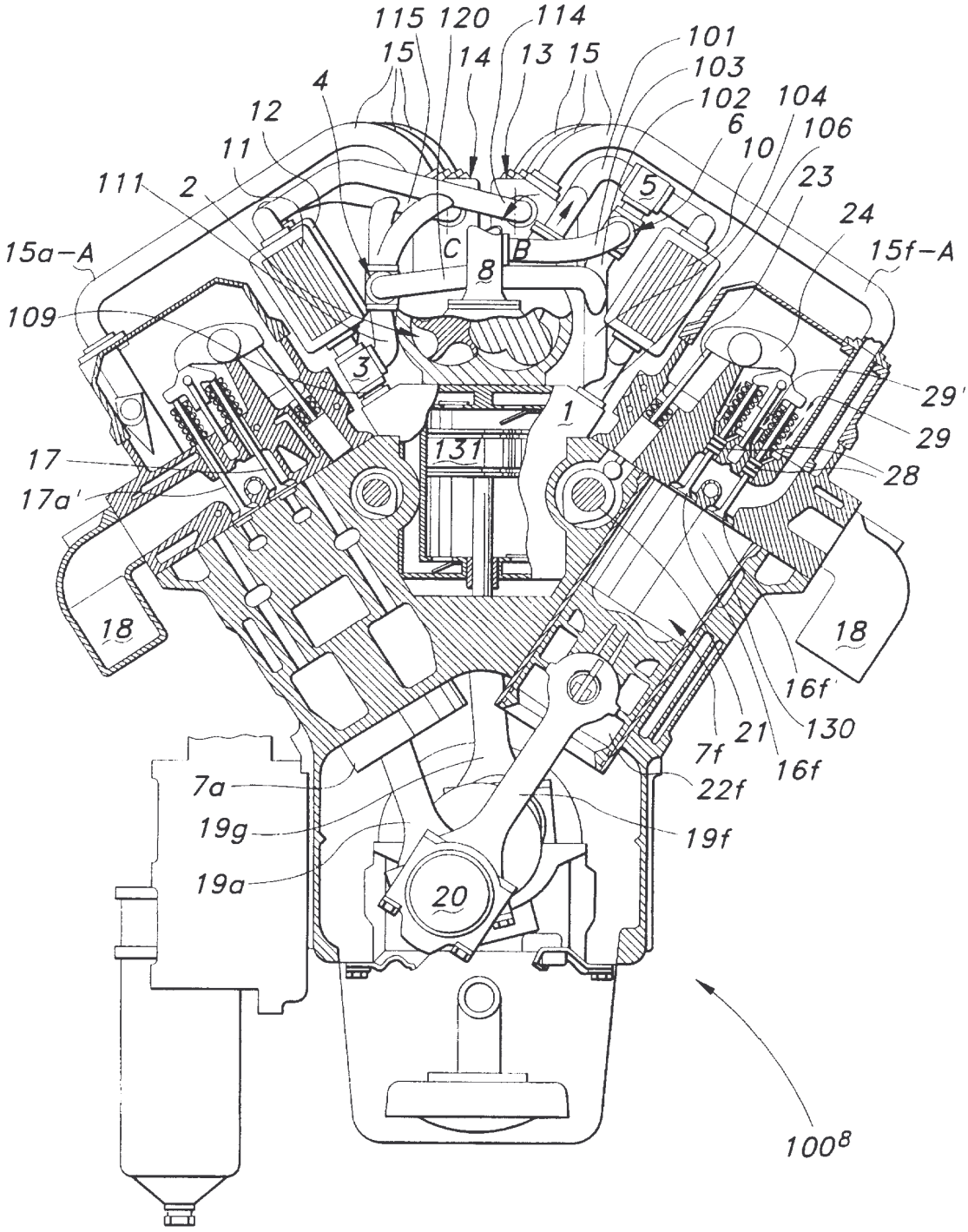
115
120
114
15
14
13
15
101
103
102
104
106
6
10
4
12
11
111
2
5
23
24
15a-A
15f-A
C
8
B
109
3
1
29'
29
131
17
28
17a'
18
18
16f'
130
21
16f
7f
22f
7a
19g
19f
19a
20
100^8

FIG 8

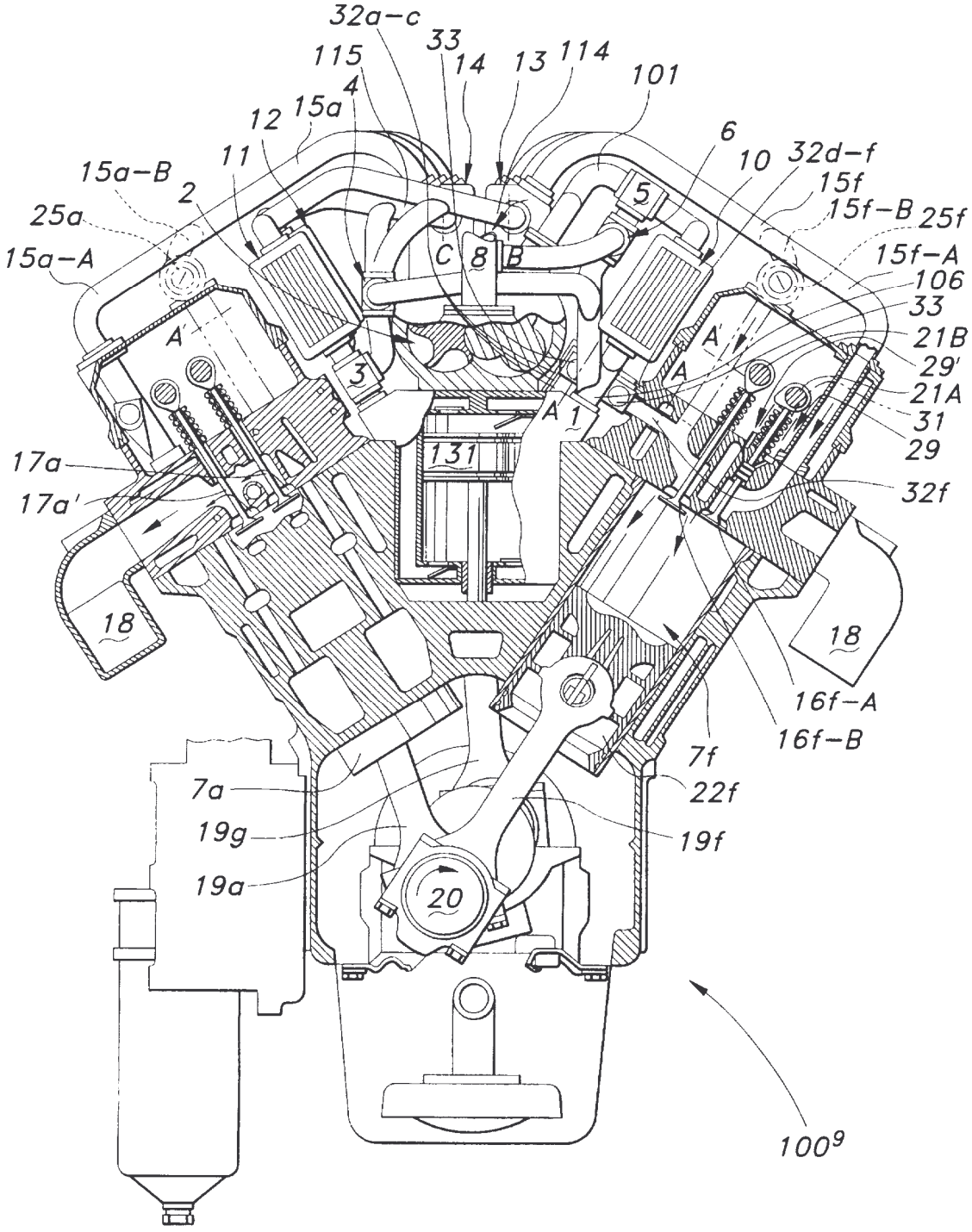
32a–c
33
115
14
13
114
101
4
15a
12
11
6
10
32d–f
15f
15f–B
25f
15a–B
2
5
25a
15a–A
C
8
B
15f–A
106
33
21B
29'
21A
31
29
32f
A'
A
A
A'
A
1
3
131
17a
17a'
18
18
16f–A
16f–B
7f
22f
19f
7a
19g
19a
20
100⁹

FIG 9

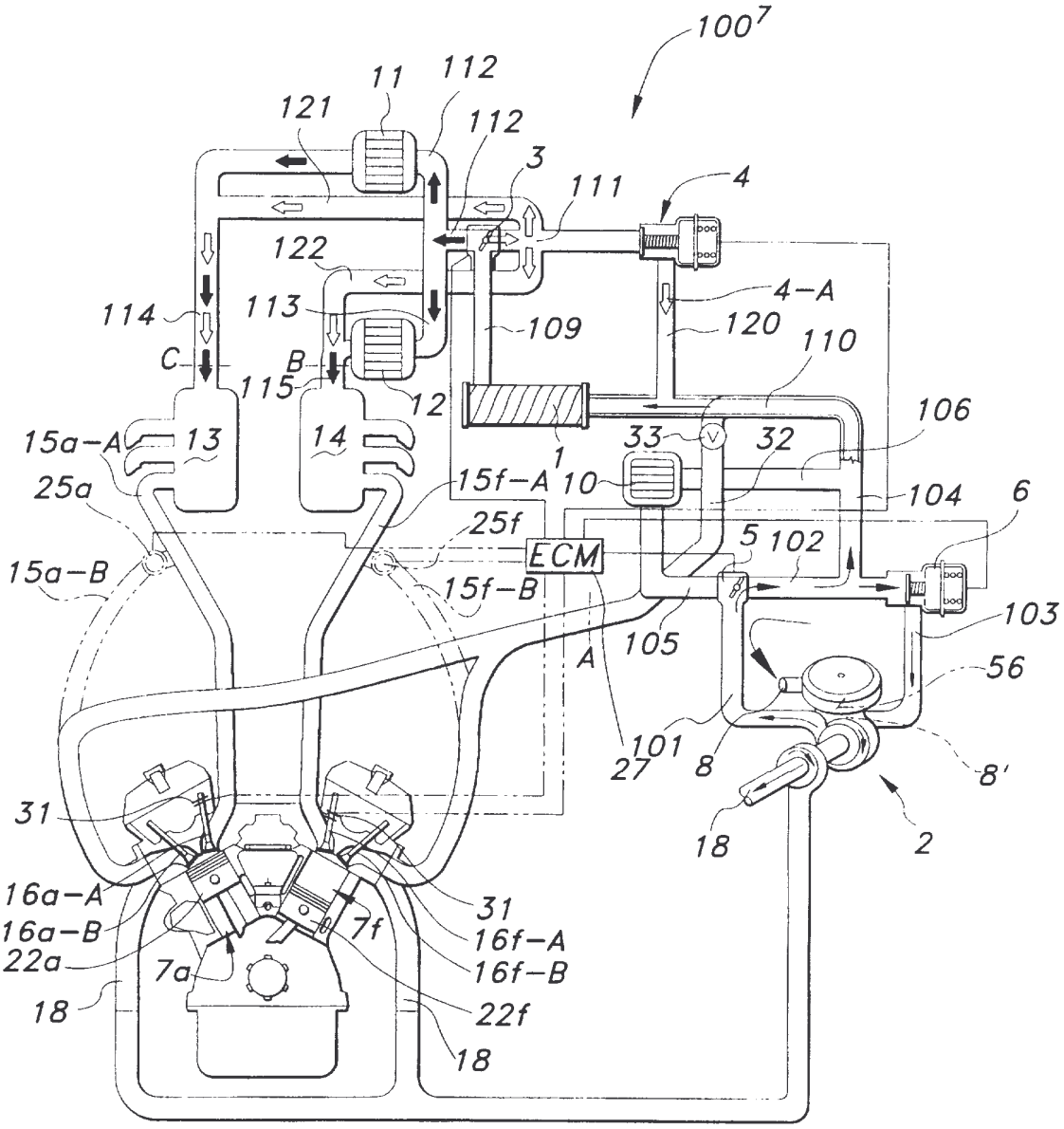
100
11
112
112
121
3
111
4
122
4-A
114
113
109
120
110
C
B
115
12
106
15a-A
13
14
33
32
1
25a
15f-A
10
104
6
25f
5
102
15a-B
ECM
15f-B
103
105
A
56
101
27
8
8'
31
18
2
16a-A
16a-B
22a
7a
7f
31
16f-A
16f-B
18
22f
18

FIG 9B

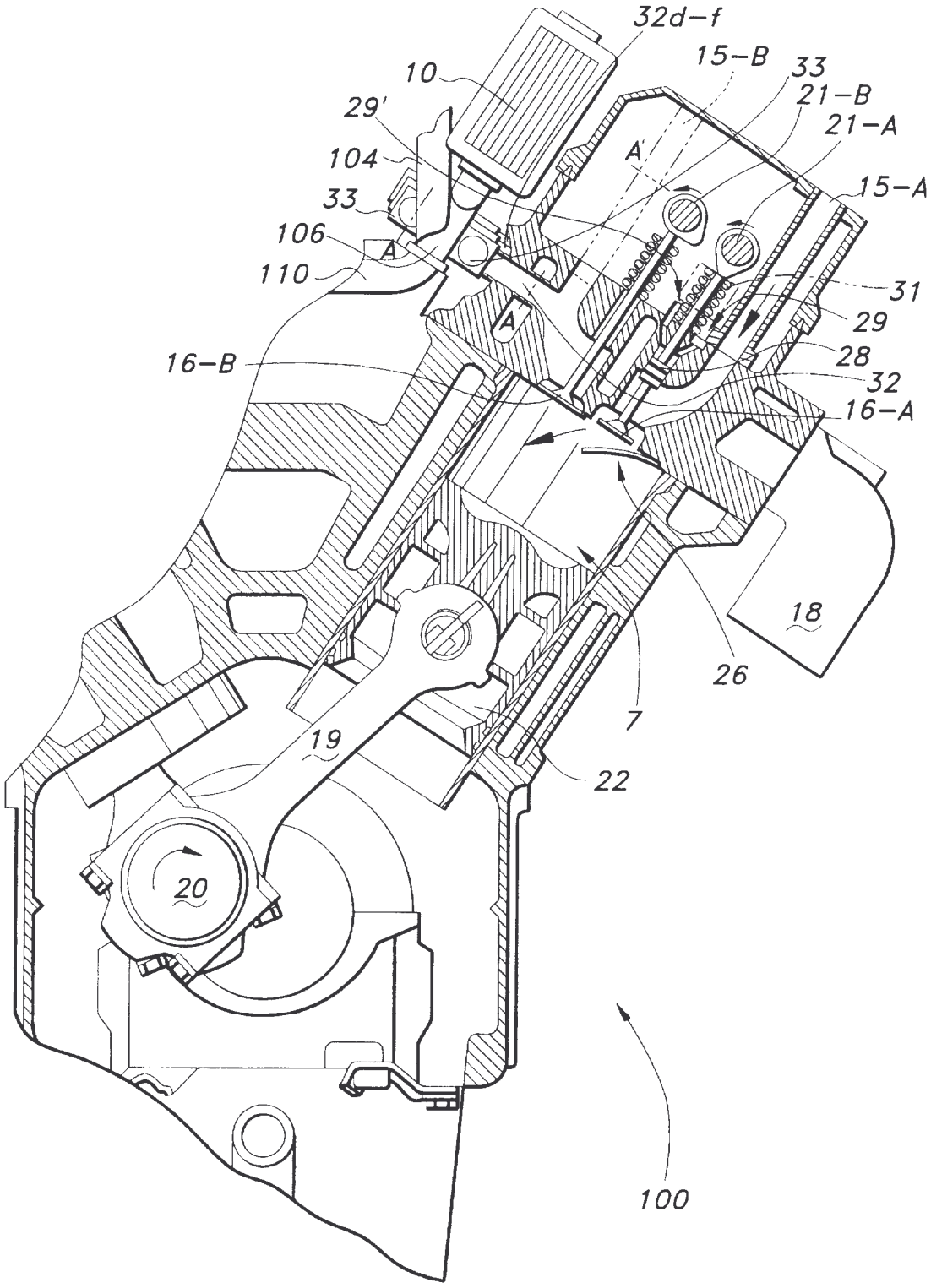
32d–f
15–B
33
21–B
21–A
15–A
10
29'
104
33
106
110
A
A'
31
29
28
32
16–A
16–B
18
26
7
19
22
20
100

FIG 10

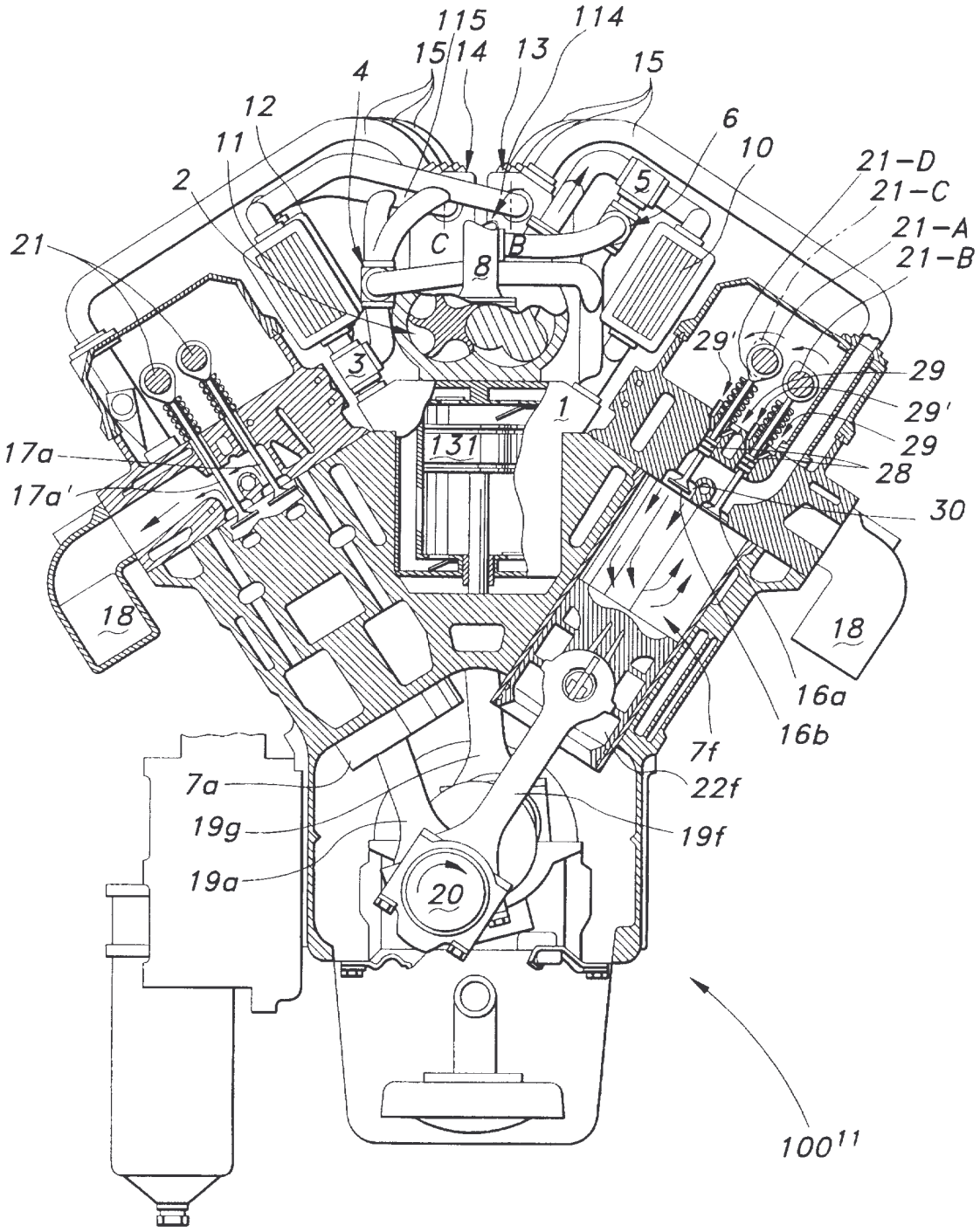
115
15
14
13
114
15
4
12
11
2
6
10
21-D
21-C
21-A
21-B
5
21
C
8
B
3
29'
29
29'
29
28
30
1
131
17a
17a'
18
18
16a
16b
7f
22f
19f
7a
19g
19a
20
100
11

FIG 11

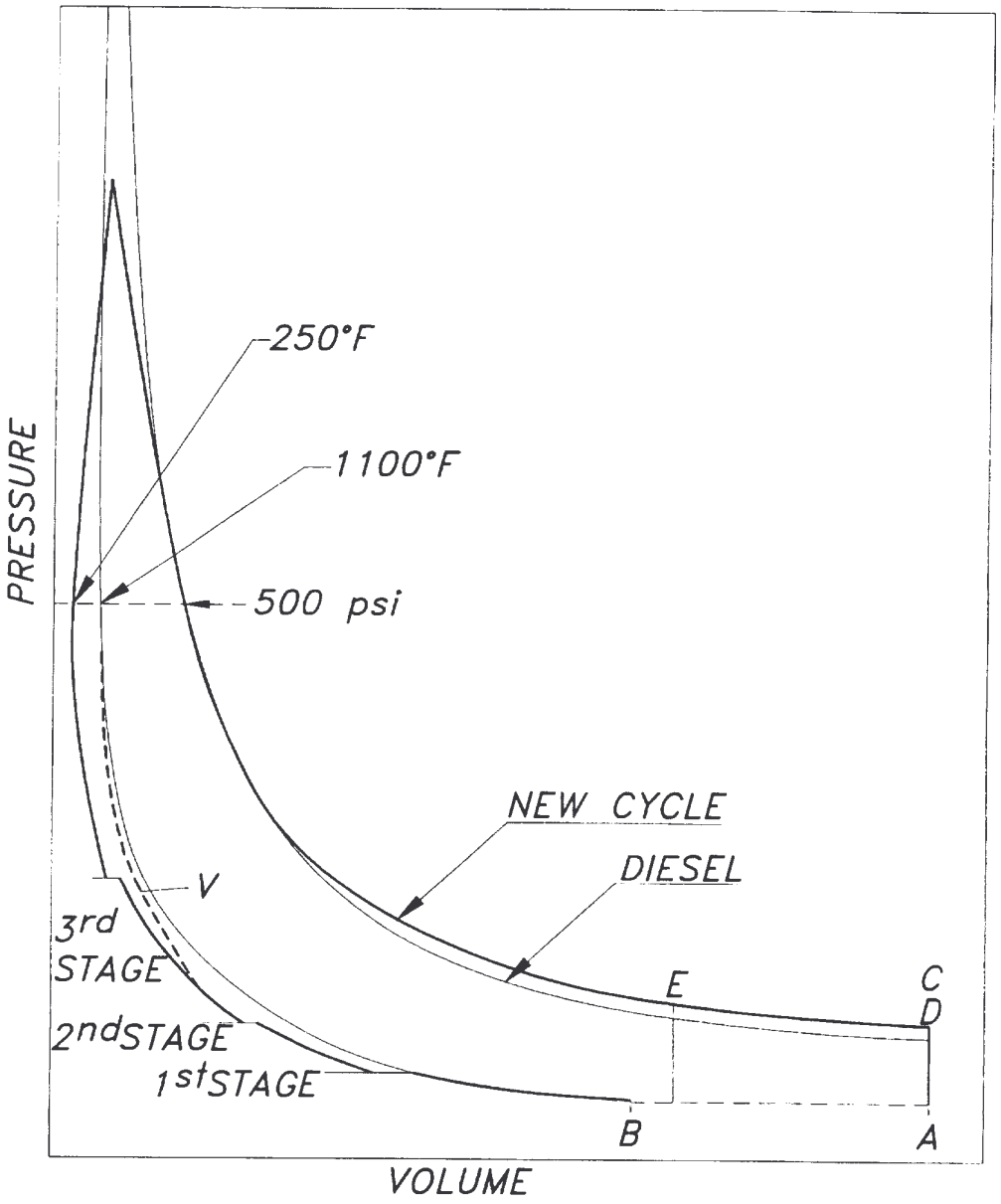

A – COMPRESSION BEGINS IN 2–STROKE AND 4–STROKE DIESEL CYCLE ENGINE
B – COMPRESSION BEGINS IN 2–STROKE AND 4–STROKE NEW CYCLE ENGINE
C – EXPANSION ENDS IN 4–STROKE DIESEL CYCLE ENGINE
D – EXPANSION ENDS IN 2–STROKE AND 4–STROKE NEW CYCLE ENGINE
E – EXPANSION ENDS (AT EXHAUST BLOW–DOWN) IN 2–STROKE DIESEL CYCLE ENGINE
V – SEE NOTE 1 IN DESCRIPTION

FIG 12

1:05-cv-01394-MMM-JAG # 28-27 Page 18 of 38

COMPARISON OF OPERATING PARAMETERS OF A HEAVY DUTY TWO-STROKE DIESEL ENGINE (A) WITH THE ENGINE OF THIS INVENTION (B)

ENGINE	COMPRESSION RATIO OR NOMINAL COMPRESSION RATIO	EFFECTIVE COMP RATIO	COMPRESSION PRESSURE (PSI)	TEMP @ END COMP (DEG F.)	TEMP @ END COMB (DEG F.)	CHARGE DENSITY (LB./CU. FT.)	EXPANSION RATIO	E. R. / C. R.	CHARGE WEIGHT PER REVOLUTION (GRAMS)
A	19:1	19:1	907	1300	3400	1.45	*10:1	0.5	2.06
B(ic)	13:1	2:1	533	250	3000	2.03	**19:1	1.5	2.86
B(bp)	13:1	13:1	533	992	^3100	1.01	**19:1	1.5	1.43
B2(ic)	10:1	2:1	369	250	^2800	1.40	**19:1	1.9	1.98
B2(bp)	10:1	10:1	369	871	^2900	0.75	**19:1	1.9	1.06

* Exhaust valve opens midstroke
** Exhaust valve opens near BDC
(ic) Air charge intercooled except for last stage of compression
(bp) Intercoolers bypassed
^ Estimated

$$\frac{\text{E. R.}}{\text{C. R.}} = \frac{\text{EXPANSION RATIO}}{\text{COMPRESSION RATIO}}$$

FIG 13

1:05-cv-01394-MMM-JAG # 28-27 Page 19 of 38

COMPARISON OF OPERATING PARAMETERS OF A HEAVY DUTY FOUR-STROKE DIESEL ENGINE (A)

WITH THE ENGINE OF THIS INVENTION (B)

ENGINE	COMPRESSION RATIO OR NOMINAL COMPRESSION RATIO	EFFECTIVE COMP RATIO	COMPRESSION PRESSURE (PSI)	TEMP @ END COMP (DEG F.)	TEMP @ END COMB (DEG F.)	CHARGE DENSITY (LB./CU. FT.)	EXPANSION RATIO	E. R. / C. R.	CHARGE WEIGHT PER REVOLUTION (GRAMS)
A	19:1	19:1	907	1300	3400	1.45	19:1	1.0	*1.03
B(ic)	13:1	2:1	533	250	3000	2.03	19:1	1.5	**2.86
B(bp)	13:1	13:1	533	992	^3100	1.01	19:1	1.5	**1.43
B2(ic)	10:1	2:1	369	250	^2800	1.40	19:1	1.9	**1.98
B2(bp)	10:1	10:1	369	871	^2900	0.75	19:1	1.9	**1.06

* Per revolution, not per firing stroke
** Per revolution and per firing stroke
(ic) Air charge intercooled except for last stage of compression
(bp) Intrecoolers bypassed
^ Estimated

$$\frac{\text{E. R.}}{\text{C. R.}} = \frac{\text{EXPANSION RATIO}}{\text{COMPRESSION RATIO}}$$

FIG 14

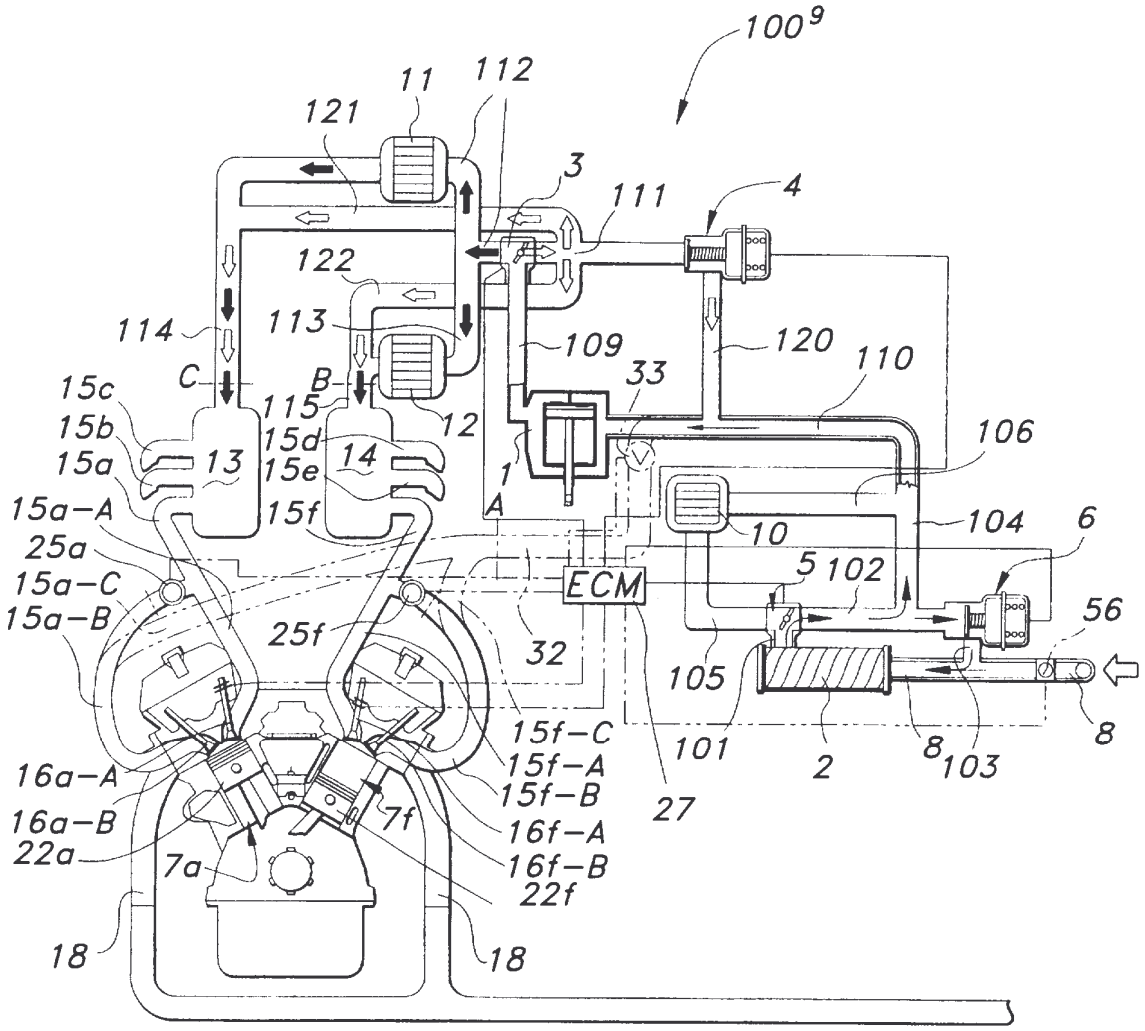
100
9
11
112
121
3
111
4
122
113
114
109
120
110
33
C
B
15c
15b
15a
115
15d
15e
13
14
12
1
A
106
15a-A
15f
10
104
6
25a
15a-C
15a-B
ECM
5
102
56
25f
32
105
15f-C
15f-A
15f-B
101
2
8
103
8
27
16a-A
16a-B
22a
7a
7f
16f-A
16f-B
22f
18
18

FIG 15

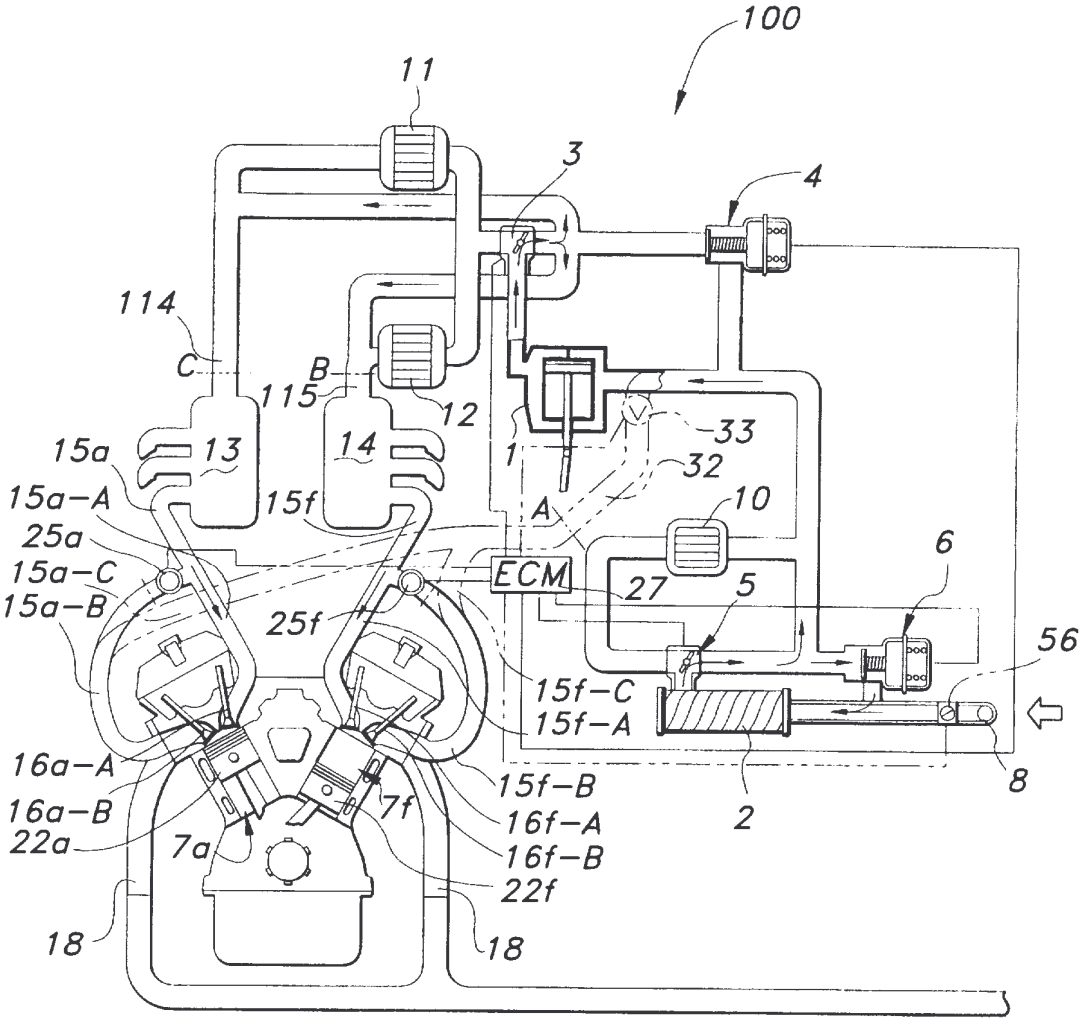
100
11
3
4
114
C
B
115
12
33
32
1
A
10
15a
13
14
15a-A
15f
25a
15a-C
15a-B
25f
ECM
27
5
6
56
15f-C
15f-A
16a-A
16a-B
22a
7a
7f
15f-B
16f-A
16f-B
22f
2
8
18
18

FIG 16

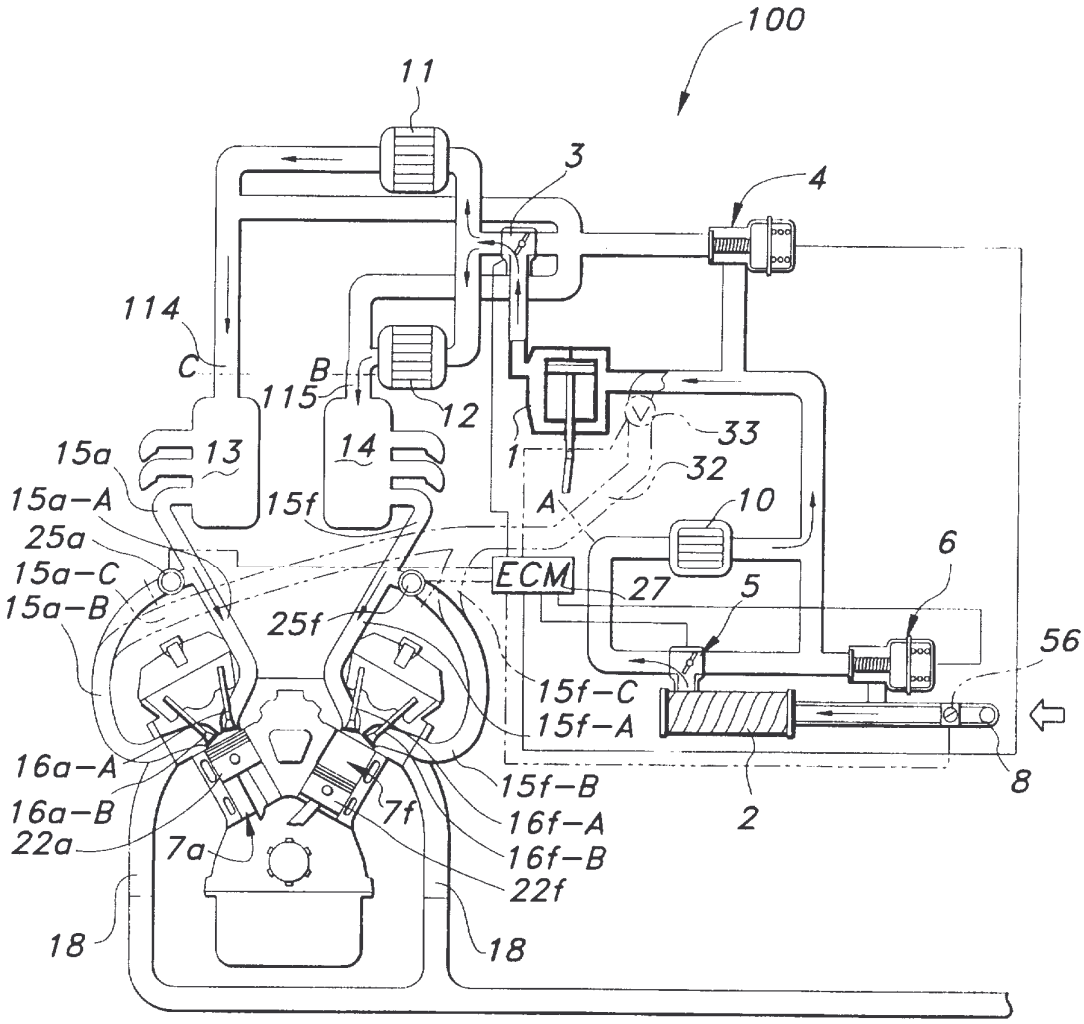
100
11
3
4
114
C
B
115
12
33
32
1
A
10
15a
13
14
15a-A
15f
25a
15a-C
15a-B
ECM
27
5
6
56
25f
15f-C
15f-A
16a-A
16a-B
22a
7a
7f
15f-B
16f-A
16f-B
22f
18
18
2
8

FIG 17

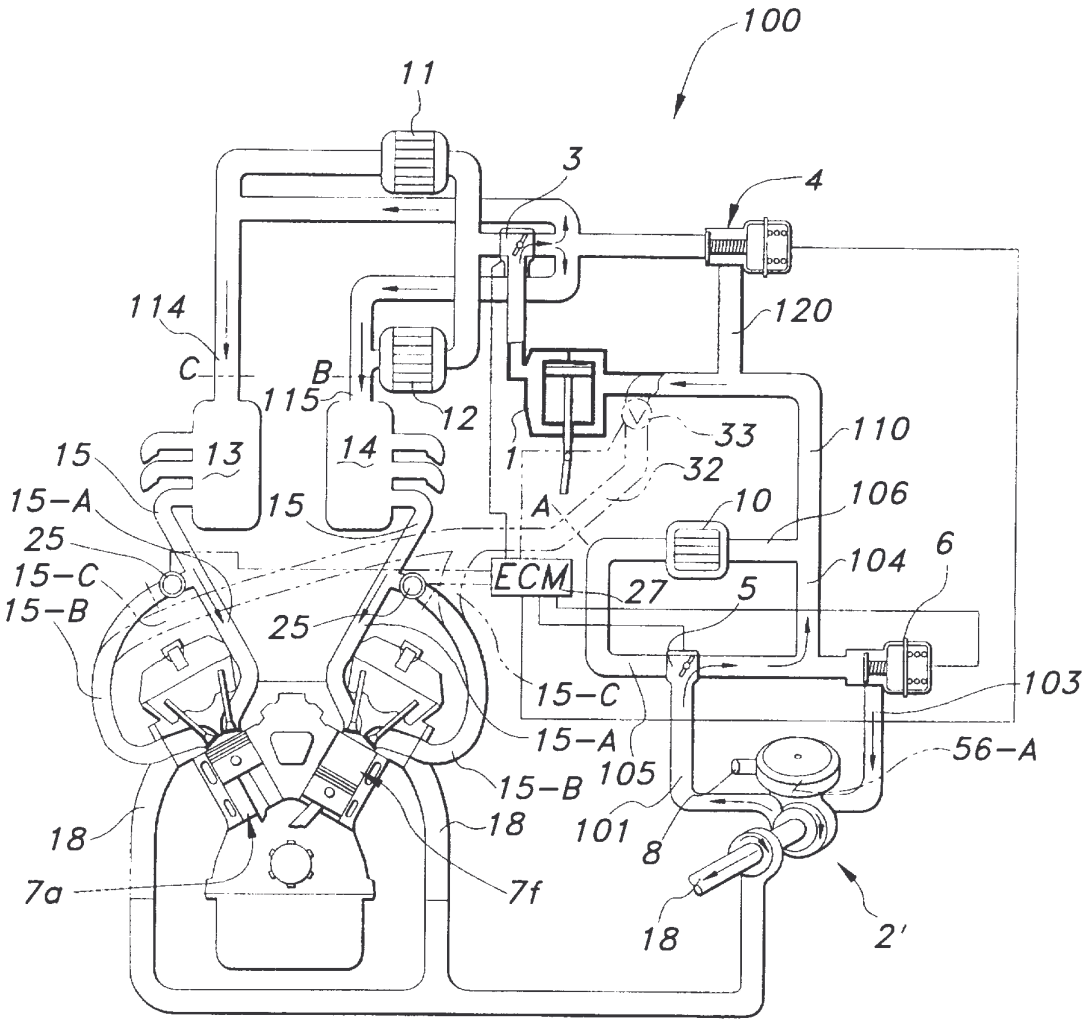
100
11
3
4
120
114
C
B
115
12
33
110
15
13
14
1
32
15-A
15
A
10
106
25
15-C
ECM
27
5
104
6
15-B
25
15-C
103
15-A
105
56-A
15-B
101
18
18
8
18
7a
7f
2'

FIG 18

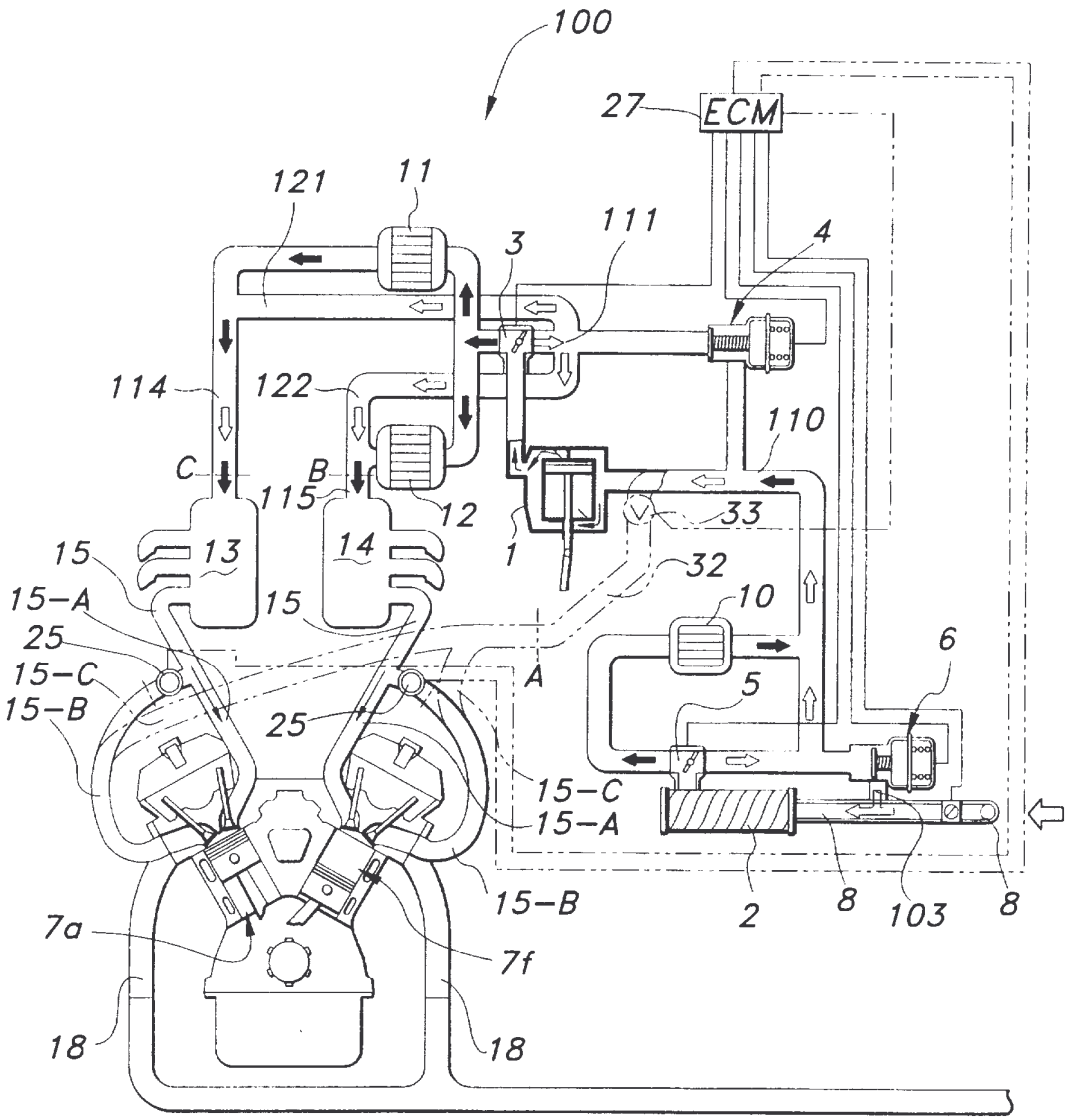
100
27
ECM
121
11
111
3
4
114
122
110
C
B
115
12
33
1
32
15
13
14
15
10
15-A
25
15-C
15-B
A
6
5
25
15-C
15-A
15-B
2
8
103
8
7a
7f
18
18

FIG 19

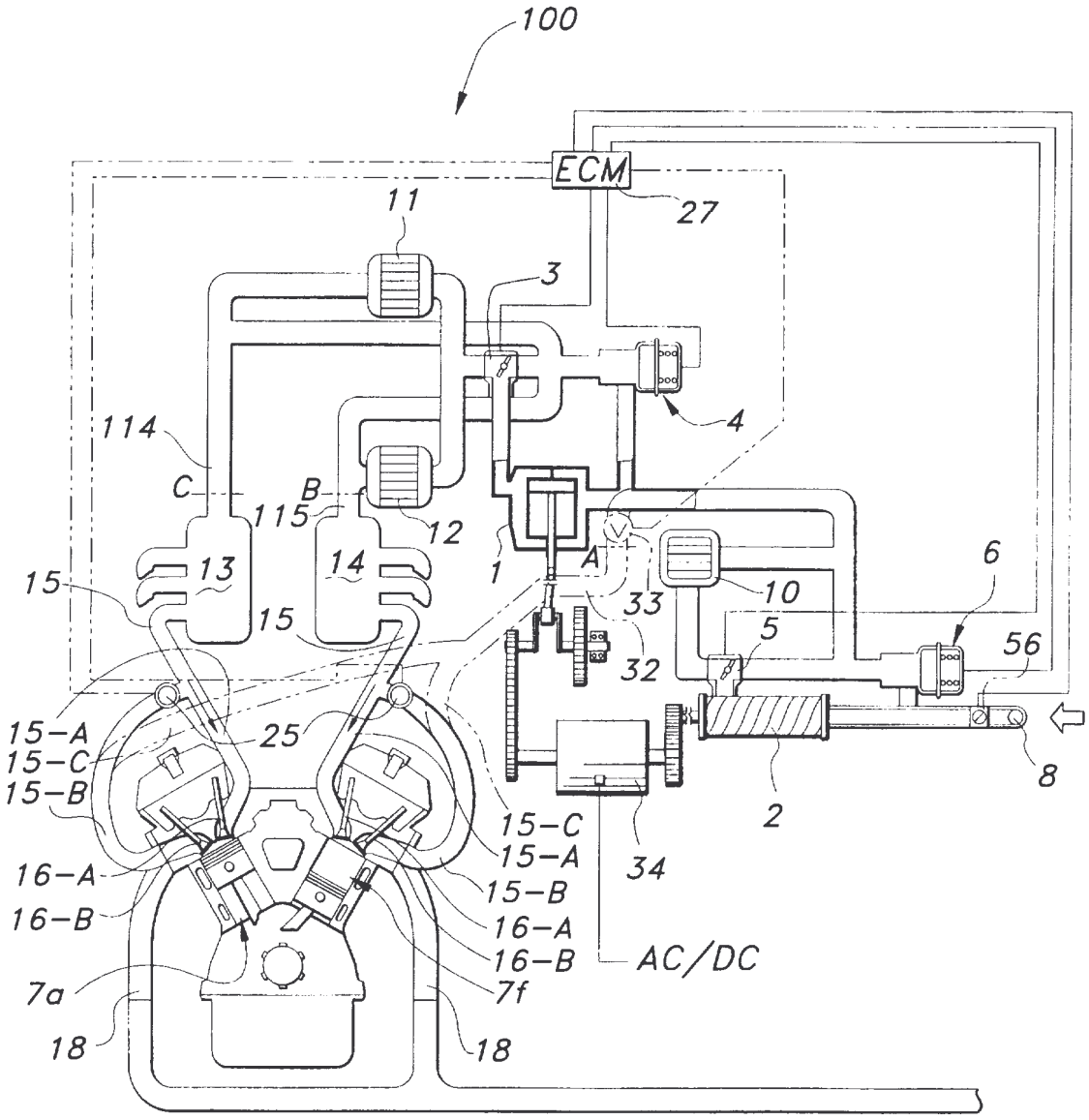
100
ECM
27
11
3
4
114
C
B
115
12
1
A
6
13
14
15
15
33
10
5
32
56
15-A
15-C
15-B
25
8
2
15-C
15-A
15-B
16-A
16-B
34
16-A
16-B
AC/DC
7a
7f
18
18

FIG 20

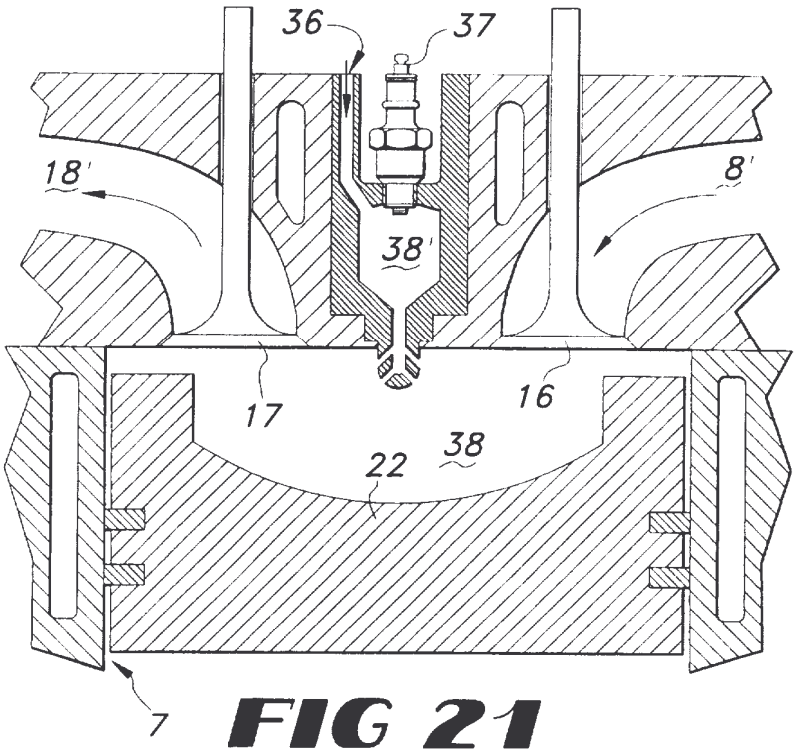

FIG 21

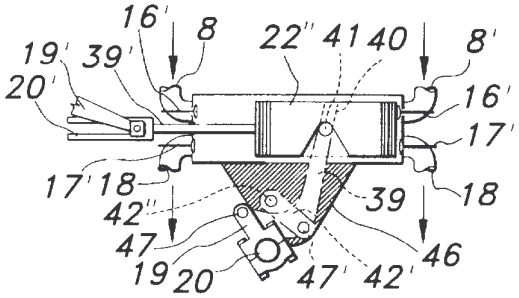

FIG 23

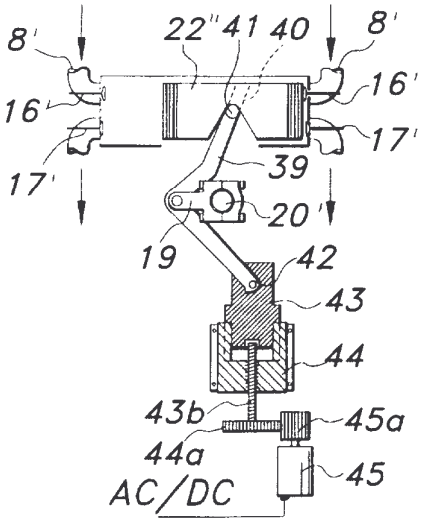

FIG 22

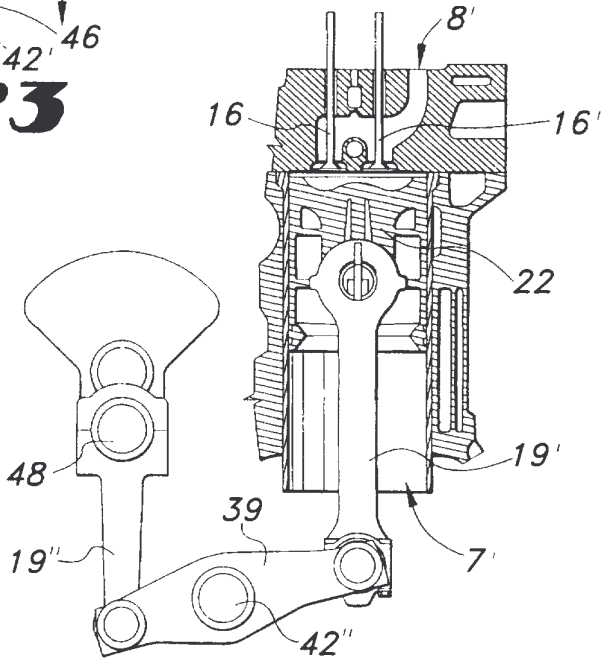

FIG 24

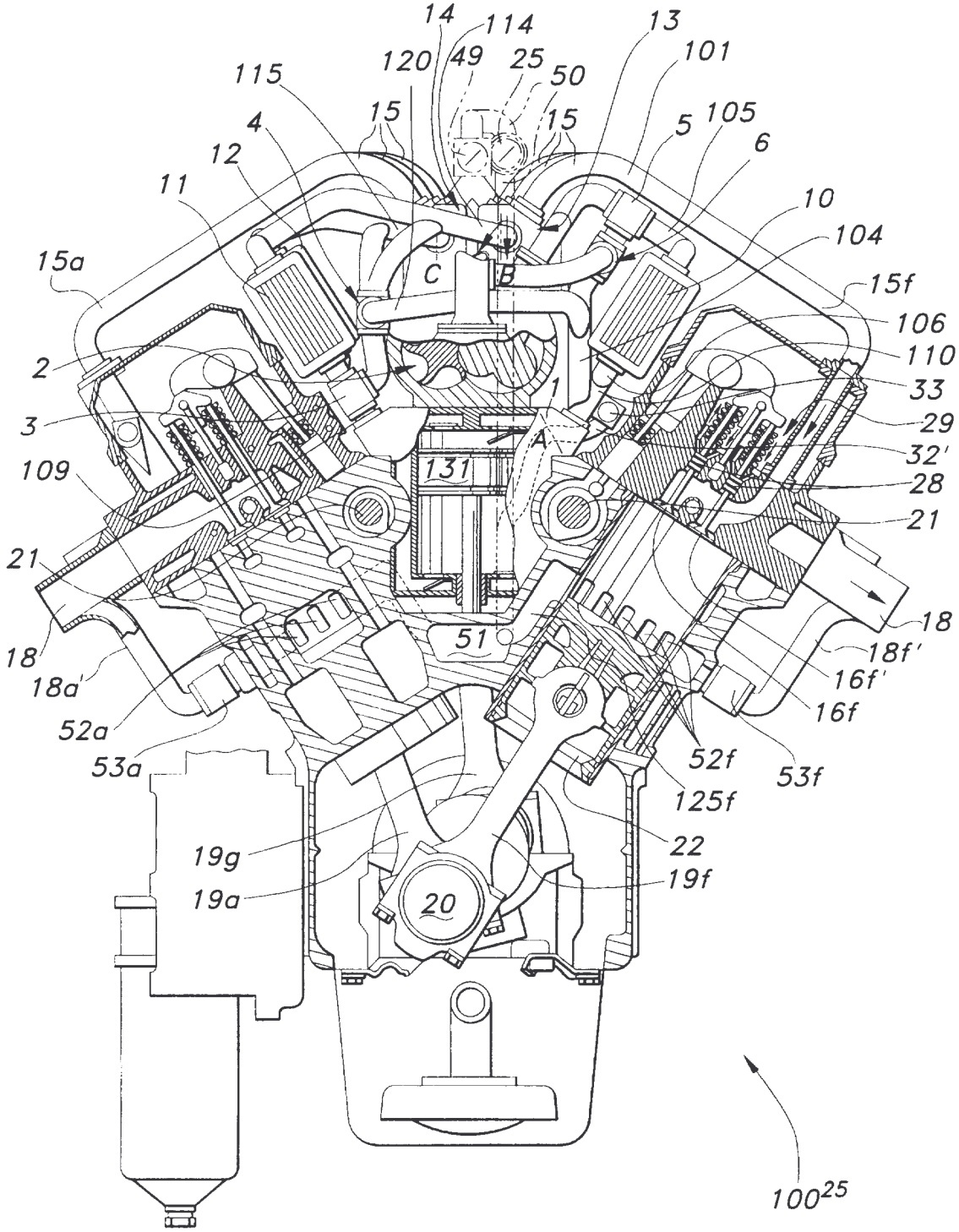
14
114
13
120
49
25
50
101
115
15
15
5
105
4
6
12
11
10
104
15a
C
B
15f
106
2
110
1
33
3
A
29
32'
109
131
28
21
21
18
51
18
18f'
18a'
16f'
16f
52a
53a
52f
53f
125f
22
19g
19f
19a
20
100

FIG 25

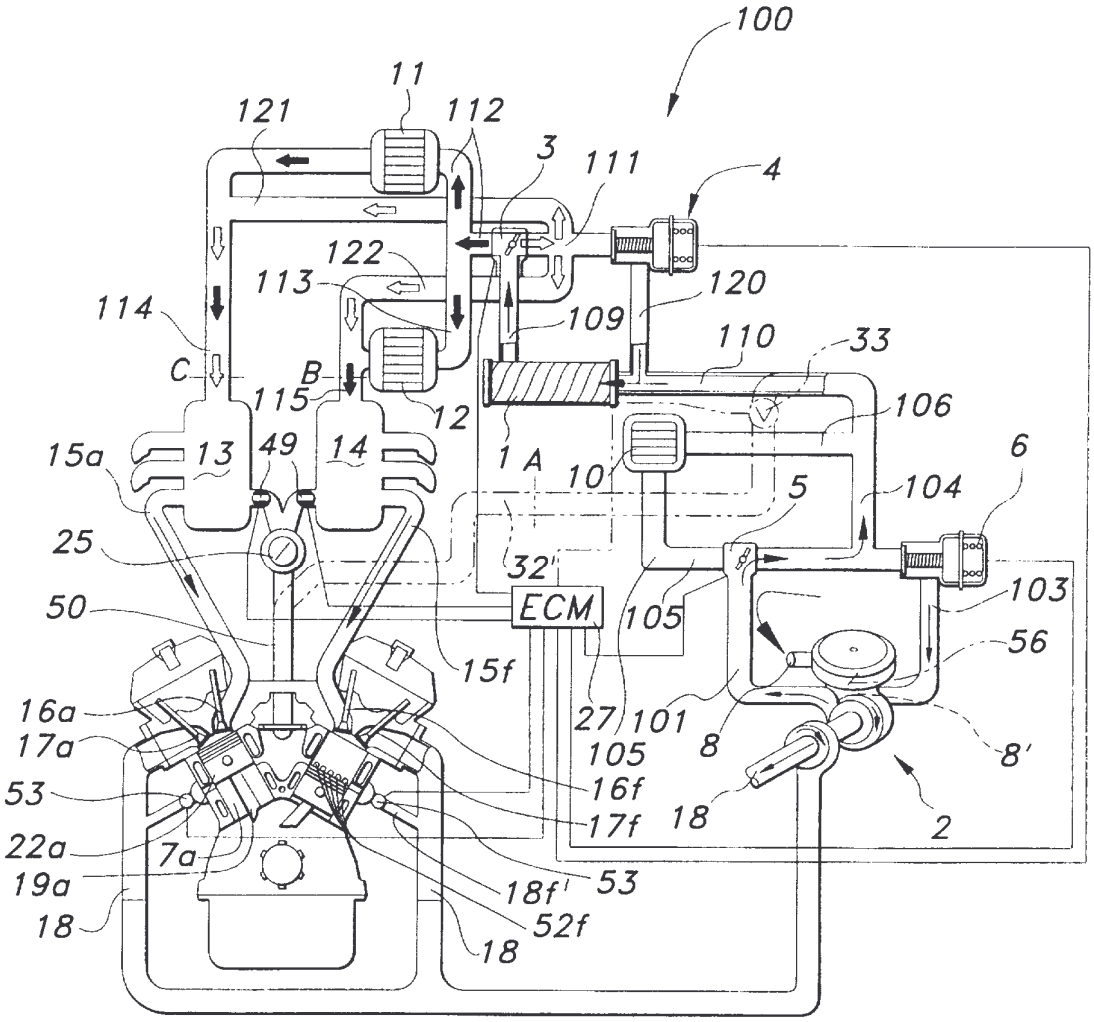
100
11
121
112
3
111
4
122
113
120
114
109
110
33
C
B
115
12
106
15a
13
49
14
1 A
10
5
104
6
25
32'
ECM
103
50
105
56
15f
27
101
8
8'
16a
17a
16f
53
17f
18
2
22a
7a
19a
53
18f
52f
18
18

FIG 26

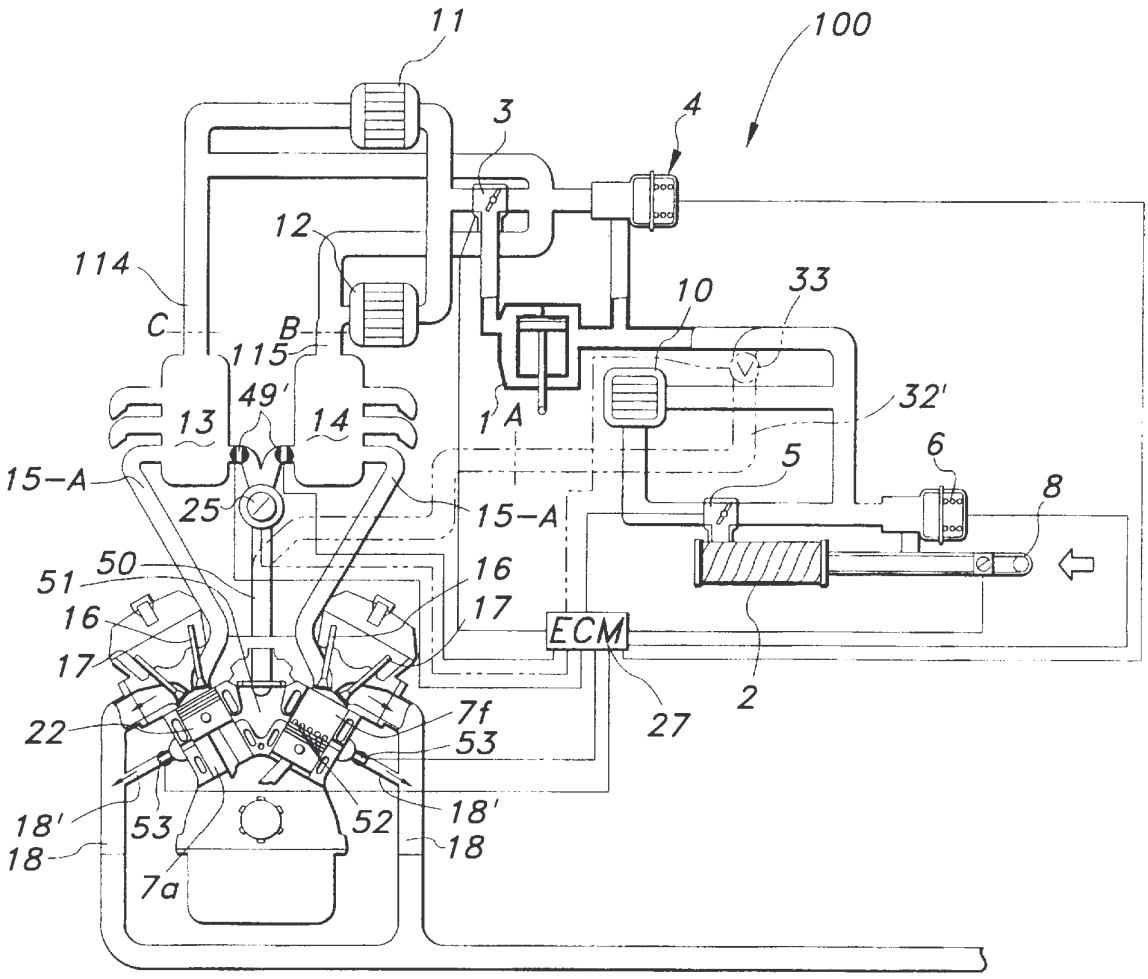
11
100
3
4
12
114
10
33
C
B
115
49'
1'A
32'
13
14
6
5
15-A
25
15-A
8
51
50
16
16
17
17
ECM
22
7f
53
27
2
18'
53
52
18'
18
18
7a

FIG 27

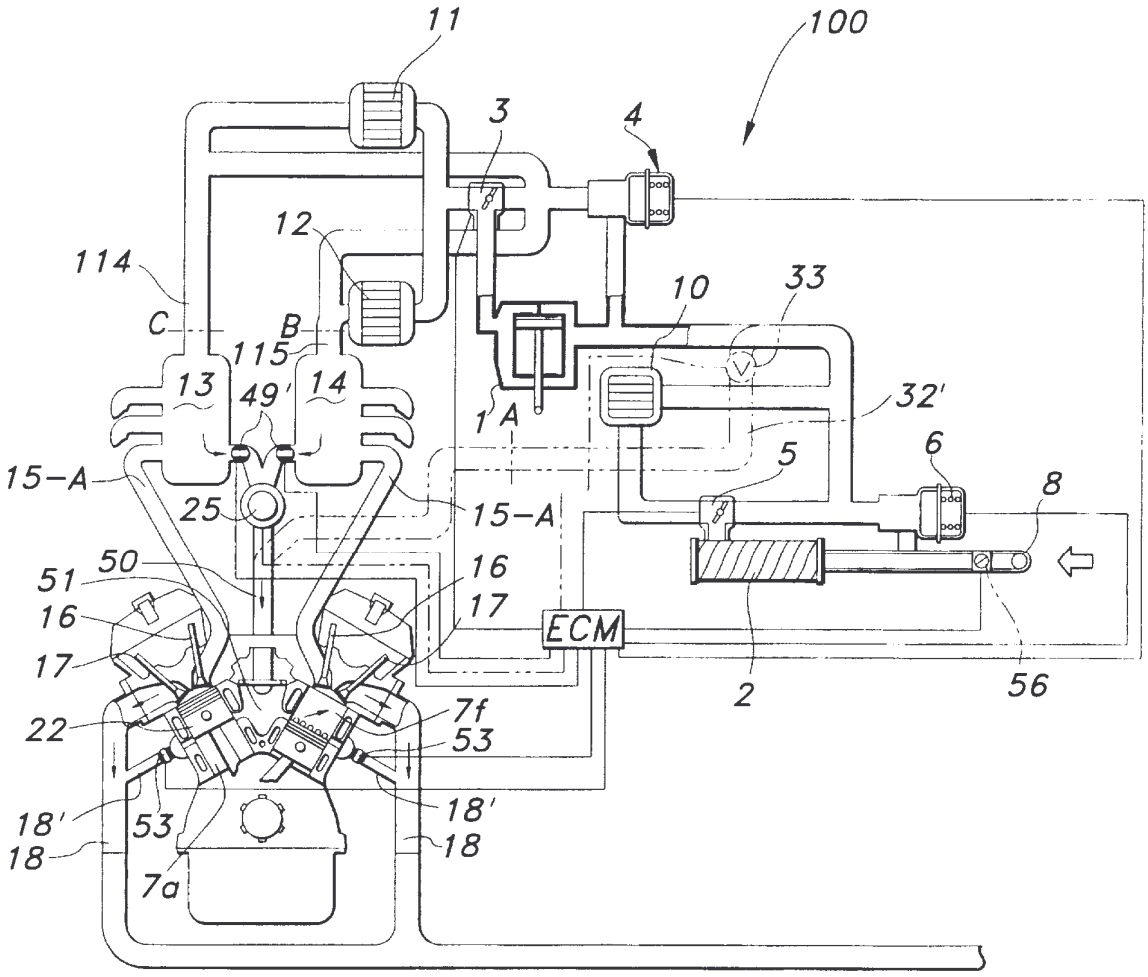
11
100
3
4
12
114
10
33
C
B
115
13
49'
14
1'
A
32'
6
5
15-A
25
15-A
8
50
51
16
16
17
17
ECM
2
56
22
7f
53
18'
53
18'
18
18
7a

FIG 28

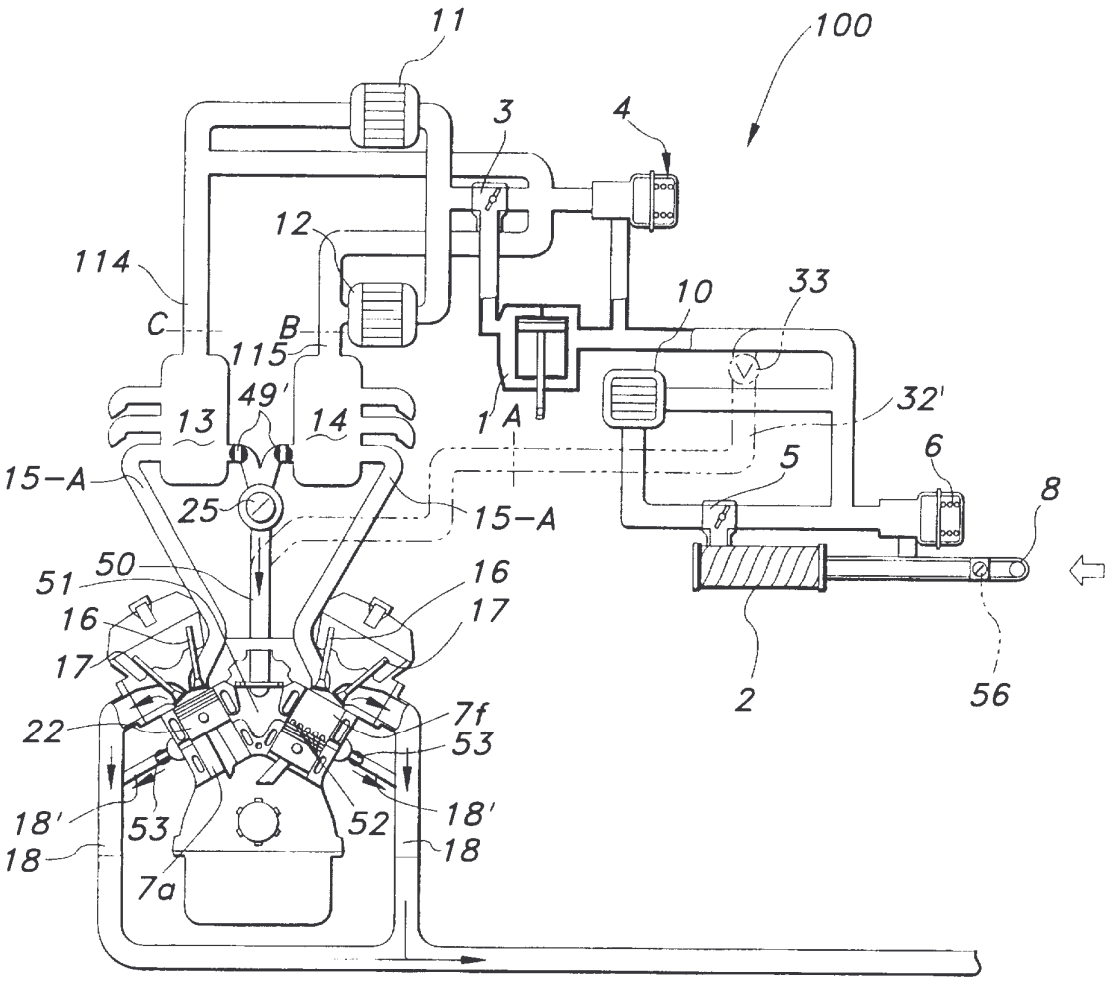
11
100
3
4
12
114
10
33
C
B
115
49'
13
14
1'
A
32'
5
6
8
15-A
25
15-A
50
51
16
17
16
17
22
7f
53
18'
53
52
18'
18
18
7a
2
56

FIG 29

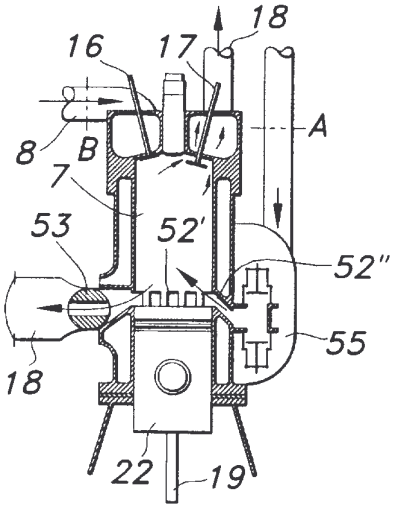
18
16
17
A
8
B
7
53
52'
52"
55
18
22
19

FIG 30

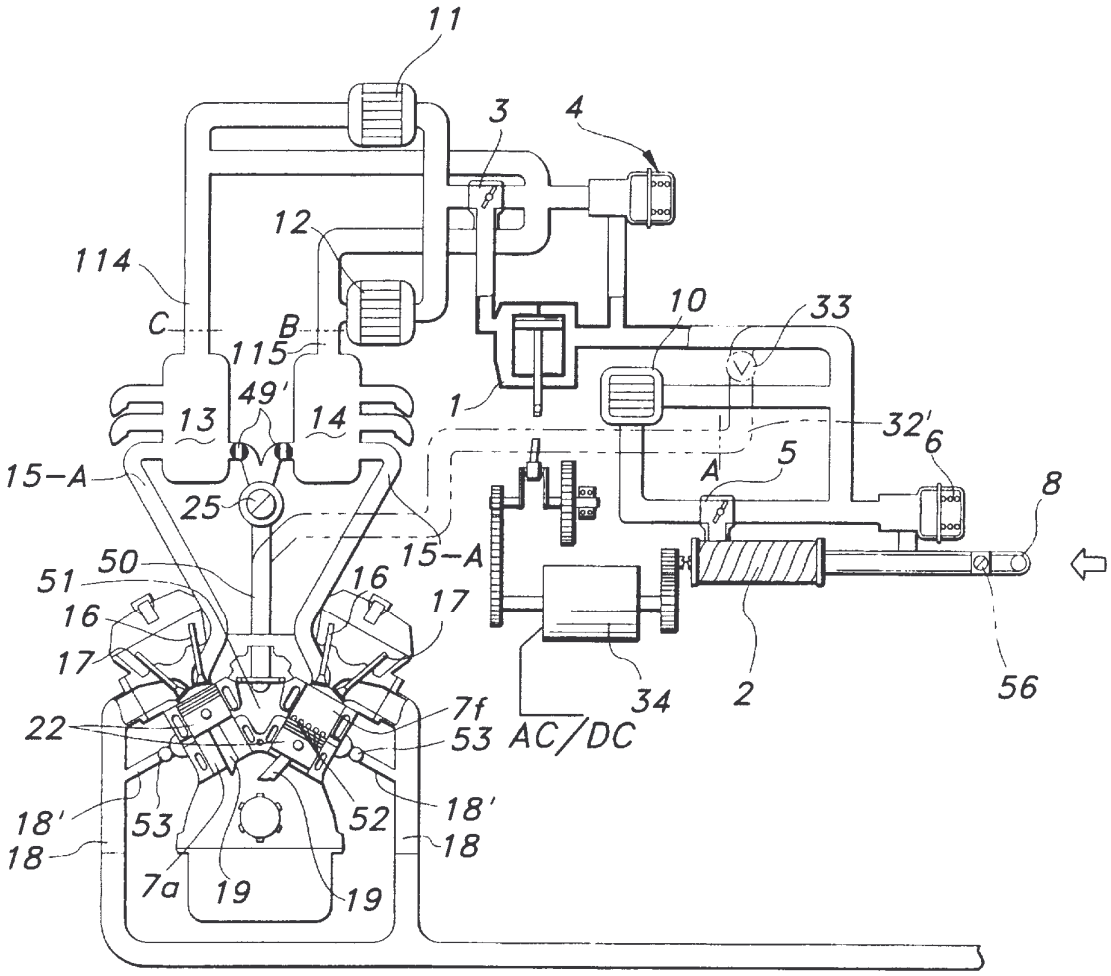
11
3
4
12
114
C
B
115
49'
13
14
10
33
1
32'
6
5
A
8
15-A
25
15-A
50
51
16
16
17
17
22
7f
53
AC/DC
34
2
56
18'
53
52
18'
18
18
7a
19
19

FIG 31

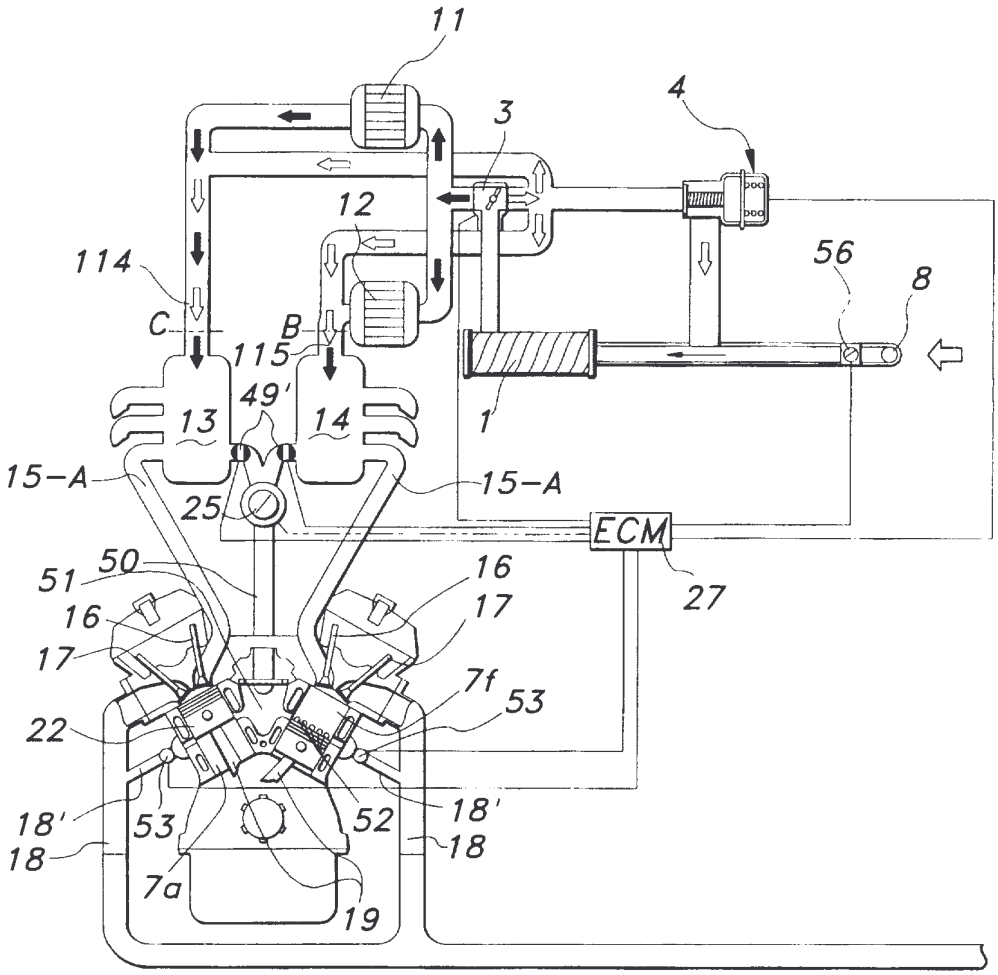
11
4
3
12
114
56
8
C
B
115
49'
13
14
1
15-A
15-A
25
ECM
27
51
50
16
17
16
17
7f
53
22
18'
53
52
18'
18
18
7a
19

FIG 32

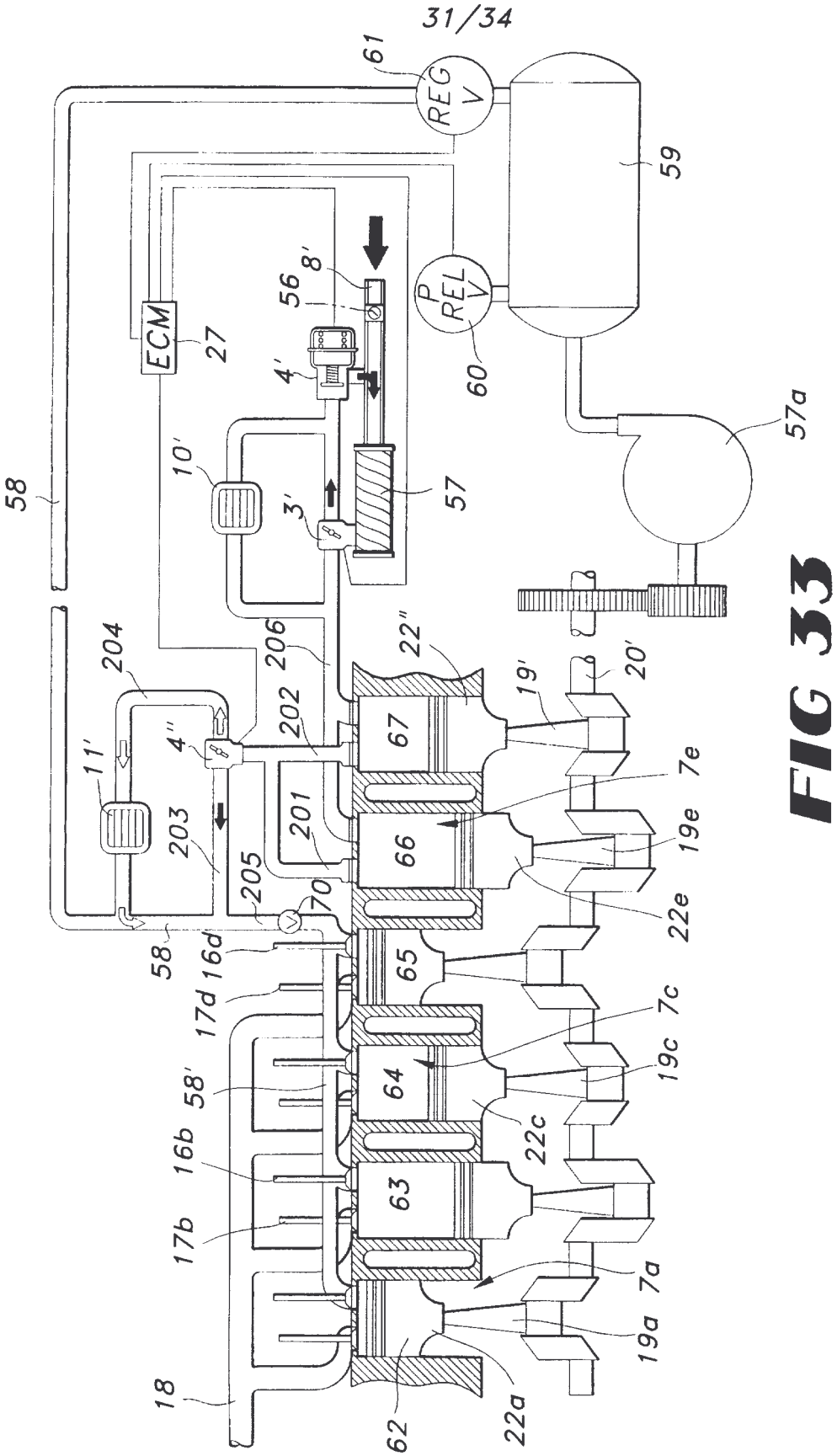
61
REG V
59
P REL V
60
57a
ECM
27
56
8'
4'
10'
3'
57
58
204
206
22"
19'
20'
202
67
7e
11'
4"
203
201
66
19e
205
70
22e
58
16d
65
17d
7c
58'
64
19c
16b
22c
63
17b
7a
19a
18
62
22a

FIG 33

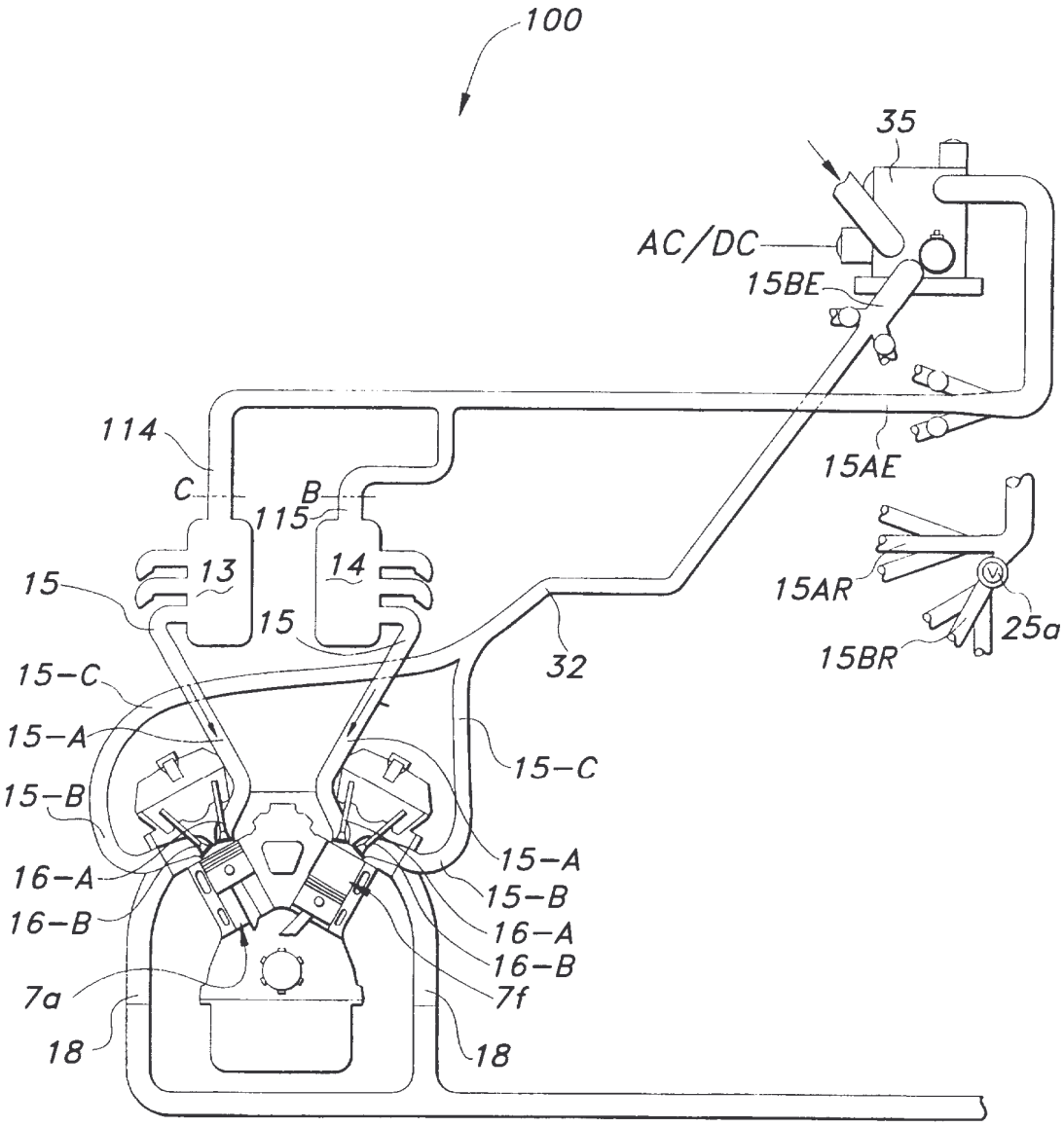
100
35
AC/DC
15BE
15AE
15AR
25a
15BR
114
C
B
115
13
14
15
15
32
15-C
15-A
15-B
16-A
16-B
7a
18
15-C
15-A
15-B
16-A
16-B
7f
18

FIG 34

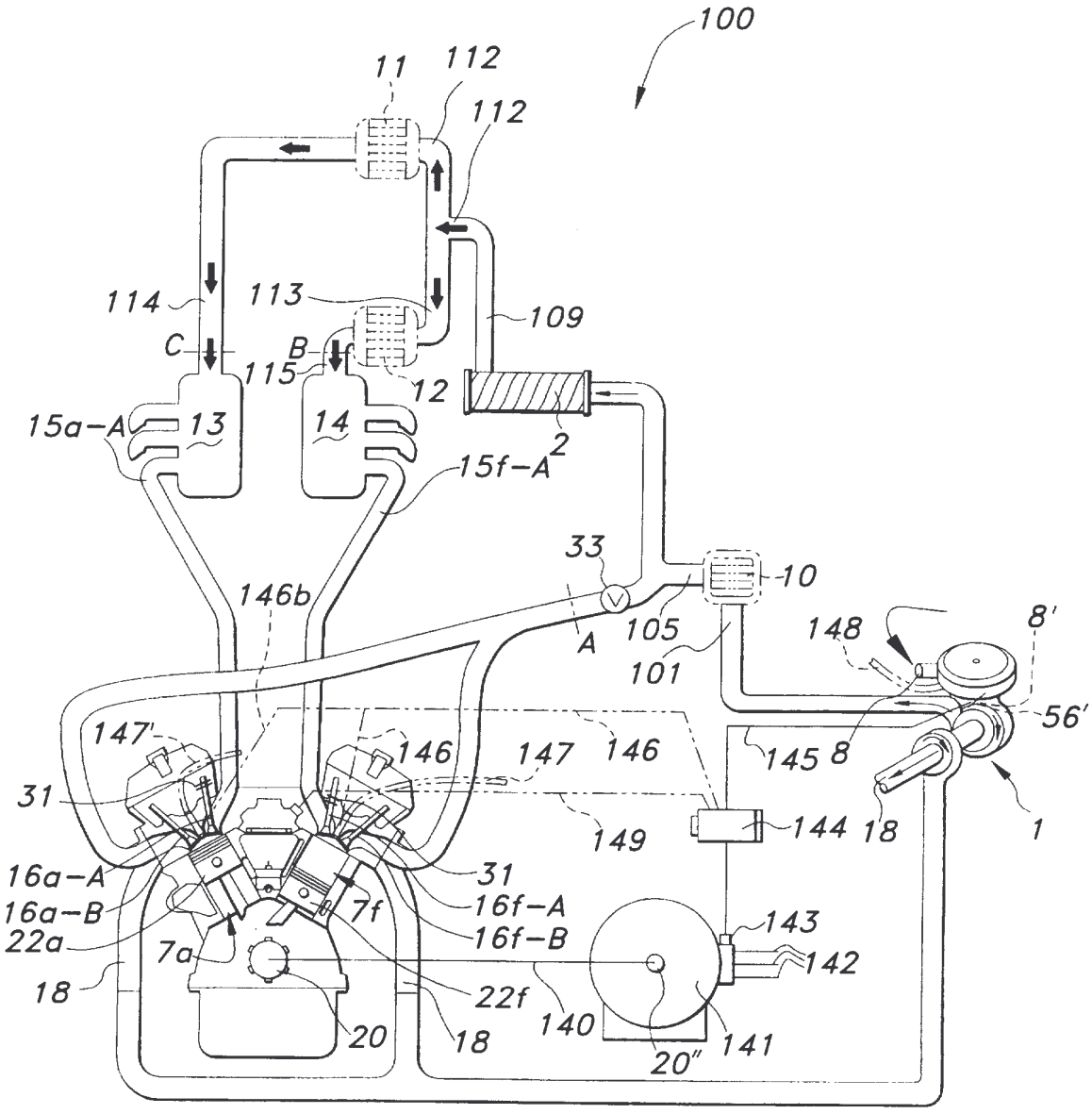
100
11
112
112
114
113
109
C
B
115
12
15a-A
13
14
2
15f-A
33
10
146b
A
105
101
148
8'
56'
147'
146
147
146
145
8
31
149
144
18
1
16a-A
16a-B
22a
18
31
16f-A
16f-B
7f
7a
143
142
22f
140
141
20
18
20"

FIG 35

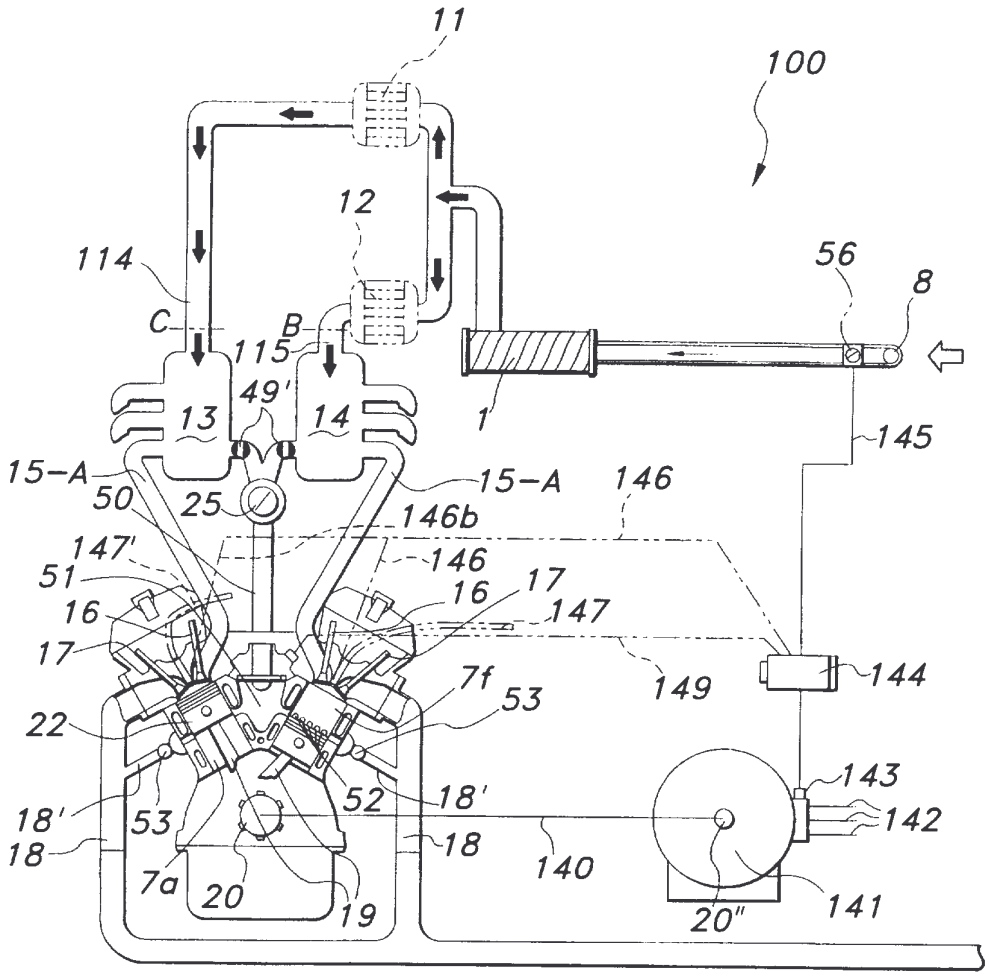
11
100
12
114
56
8
C
B
115
49'
13
14
1
145
15-A
50
25
15-A
146
146b
147'
146
51
16
17
147
16
17
7f
53
149
144
22
143
18'
53
52
18'
142
18
18
140
7a
20
19
20"
141

FIG 36

INTERNATIONAL SEARCH REPORT

International application No.
PCT/US97/09072

A. CLASSIFICATION OF SUBJECT MATTER

IPC(6) :F02B 41/04; F02D 13/02, 23/00
US CL :123/564, 562

According to International Patent Classification (IPC) or to both national classification and IPC

B. FIELDS SEARCHED

Minimum documentation searched (classification system followed by classification symbols)

U.S. : 123/564, 562, 559.1; 60/609, 611, 612

Documentation searched other than minimum documentation to the extent that such documents are included in the fields searched

Electronic data base consulted during the international search (name of data base and, where practicable, search terms used)

C. DOCUMENTS CONSIDERED TO BE RELEVANT

Category*	Citation of document, with indication, where appropriate, of the relevant passages	Relevant to claim No.
X	US 2,344,993 A (LYSHOLM) 28 March 1944, entire document.	1-5, 9, 15-18
X	US 2,594,845 A (BAUMANN) 29 April 1952, entire document.	1, 7, 8
X	US 2,670,595 A (MILLER) 02 March 1954, entire document.	19-21, 23, 24
X	US 4,730,457 A (YAMADA et al) 15 March 1988, entire document.	1-5, 9, 12-17, 22
Y		1-6
Y	US 4,903,488 A (SHIBATA) 27 February 1990, entire document.	1-6

☐ Further documents are listed in the continuation of Box C. ☐ See patent family annex.

*	Special categories of cited documents:	"T"	later document published after the international filing date or priority date and not in conflict with the application but cited to understand the principle or theory underlying the invention
"A"	document defining the general state of the art which is not considered to be of particular relevance	"X"	document of particular relevance; the claimed invention cannot be considered novel or cannot be considered to involve an inventive step when the document is taken alone
"E"	earlier document published on or after the international filing date	"Y"	document of particular relevance; the claimed invention cannot be considered to involve an inventive step when the document is combined with one or more other such documents, such combination being obvious to a person skilled in the art
"L"	document which may throw doubts on priority claim(s) or which is cited to establish the publication date of another citation or other special reason (as specified)	"&"	document member of the same patent family
"O"	document referring to an oral disclosure, use, exhibition or other means		
"P"	document published prior to the international filing date but later than the priority date claimed		

Date of the actual completion of the international search
08 AUGUST 1997

Date of mailing of the international search report
28 NOV 1997

Name and mailing address of the ISA/US
Commissioner of Patents and Trademarks
Box PCT
Washington, D.C. 20231

Facsimile No. (703) 305-3230

Authorized officer
Michael Koczo, Jr.

Telephone No. (703) 308-0861

Form PCT/ISA/210 (second sheet)(July 1992)*

1:05-cv-01394-MMM-JAG # 28-28 Page 1 of 15

E-FILED
Thursday, 09 February, 2006 05:37:58 PM
Clerk, U.S. District Court, ILCD

COMMISSIONER FOR PATENTS
UNITED STATES PATENT AND TRADEMARK OFFICE
P.O. BOX 1450
ALEXANDRIA, VA 22313-1450
www.uspto.gov

CONTROL NO.	FILING DATE	PATENT IN REEXAMINATION	ATTORNEY DOCKET NO.
95/000050	09/17/2004	6,688,280	

Finnegan Henderson Farabow Garrett
& Dunner LLP
901 New York Avenue NW
Washington DC 20001-4413

EXAMINER
Thomas N. Moulis

ART UNIT	PAPER
3747	

DATE MAILED:

09/22/05

INTER PARTES REEXAMINATION COMMUNICATION

BELOW/ATTACHED YOU WILL FIND A COMMUNICATION FROM THE UNITED STATES PATENT AND TRADEMARK OFFICE OFFICIAL(S) IN CHARGE OF THE PRESENT REEXAMINATION PROCEEDING.

All correspondence relating to this *inter partes* reexamination proceeding should be directed to the **Central Reexamination Unit** at the mail, FAX, or hand-carry addresses given at the end of this communication.

UNITED STATES PATENT AND TRADEMARK OFFICE

Commissioner for Patents
United States Patent and Trademark Office
P.O. Box 1450
Alexandria, VA 22313-1450
www.uspto.gov

DO NOT USE IN PALM PRINTER

(THIRD PARTY REQUESTER'S CORRESPONDENCE ADDRESS)

Womble Carlyle Sandridge & Rice, PLLC
P.O. Box 7037
Atlanta, GA 30357-0037

Transmittal of Communication to Third Party Requester
Inter Partes Reexamination

REEXAMINATION CONTROL NUMBER *95/000,050*.

PATENT NUMBER *6,688,280*.

TECHNOLOGY CENTER *3700*.

ART UNIT *3747*.

Enclosed is a copy of the latest communication from the United States Patent and Trademark Office in the above-identified reexamination proceeding. 37 CFR 1.903.

Prior to the filing of a Notice of Appeal, each time the patent owner responds to this communication, the third party requester of the *inter partes* reexamination may once file written comments within a period of 30 days from the date of service of the patent owner's response. This 30-day time period is statutory (35 U.S.C. 314(b)(2)), and, as such, it cannot be extended. See also 37 CFR 1.947.

If an *ex parte* reexamination has been merged with the *inter partes* reexamination, no responsive submission by any *ex parte* third party requester is permitted.

All correspondence relating to this inter partes reexamination proceeding should be directed to the **Central Reexamination Unit** at the mail, FAX, or hand-carry addresses given at the end of the communication enclosed with this transmittal.

ACTION CLOSING PROSECUTION (37 CFR 1.949)	Control No. 95/000,050	Patent Under Reexamination 6688280	
	Examiner Thomas N. Moulis	Art Unit 3747	

-- The MAILING DATE of this communication appears on the cover sheet with the correspondence address. --

Responsive to the communication(s) filed by:
Patent Owner on 24 January 2005
Third Party(ies) on 25 February 2005

Patent owner may once file a submission under 37 CFR 1.951(a) within 1 month(s) from the mailing date of this Office action. Where a submission is filed, third party requester may file responsive comments under 37 CFR 1.951(b) within 30-days (not extendable- 35 U.S.C. § 314(b)(2)) from the date of service of the initial submission on the requester. **Appeal cannot be taken from this action.** Appeal can only be taken from a Right of Appeal Notice under 37 CFR 1.953.

All correspondence relating to this inter partes reexamination proceeding should be directed to the **Central Reexamination Unit** at the mail, FAX, or hand-carry addresses given at the end of this Office action.

PART I. THE FOLLOWING ATTACHMENT(S) ARE PART OF THIS ACTION:

1. ☒ Notice of References Cited by Examiner, PTO-892
2. ☒ Information Disclosure Citation, PTO-1449 or PTO/SB/08
3. ☐ _____

PART II. SUMMARY OF ACTION:

1a. ☒ Claims 1-16 and 21-33 are subject to reexamination.
1b. ☐ Claims _____ are not subject to reexamination.
2. ☐ Claims _____ have been canceled.
3. ☒ Claims 17-20 are confirmed. [Unamended patent claims]
4. ☐ Claims _____ are patentable. [Amended or new claims]
5. ☒ Claims 1-16 and 21-33 are rejected.
6. ☐ Claims _____ are objected to.
7. ☐ The drawings filed on _____ ☐ are acceptable ☐ are not acceptable.
8 ☐ The drawing correction request filed on _____ is: ☐ approved. ☐ disapproved.
9 ☐ Acknowledgment is made of the claim for priority under 35 U.S.C. 119 (a)-(d). The certified copy has:
☐ been received. ☐ not been received. ☐ been filed in Application/Control No _____
10. ☐ Other _____

Grounds of Rejection

1. Ground 1: Claims 1-6, 10 and 21- 33 of the Weber patent are unpatentable under 35 U.S.C. 102(b) over Bryant, WO 98/02653.

2. Ground 2: Claims 7-12 of the Weber patent are unpatentable under 35 U.S.C. 103(a) over Bryant in view of Vulliamy US 3,250,068 or the Challen et al. publication.

3. Ground 3: Claims 13-16 of the Weber patent are unpatentable under 35 U.S.C. 103(a) over Bryant in view of Letang et al., US 5,445,128.

4. Ground 4: Claim 14 of the Weber patent is unpatentable under 35 U.S.C. 103(a) over Bryant in view of Letang et al., further in view of Gladden et al., US 6,301,889, or the Challen publication.

5. Ground 5: Claims 23, 24 and 31-33 of the Weber patent are unpatentable under 35 U.S.C. 103(a) over Bryant in view of the Obert publication.

Claim Rejections - 35 USC § 102

6. The following is a quotation of the appropriate paragraphs of 35 U.S.C. 102 that form the basis for the rejections under this section made in this Office action:

> A person shall be entitled to a patent unless –
>
> (b) the invention was patented or described in a printed publication in this or a foreign country or in public use or on sale in this country, more than one year prior to the date of application for patent in the United States.

Ground 1:

7. Claims 1-6, 10, 21-22 and 25-30 of Weber et al patent are rejected under 35 U.S.C. 102(b) as being anticipated by Bryant WO 98/02653.

8. As set forth on pages 2-5 of the request, Bryant discloses each method step of operating an internal combustion engine specified in claims 1-6, 10, 21-22 and 25-30 including the steps of supplying a mixture of pressurized air and recirculated exhaust gas to the intake port of the combustion chamber, and selectively controlling the opening of an intake valve to allow the mixture to flow between the combustion chamber and the intake manifold during a majority portion of a compression stroke of the engine piston, and a fuel supply system to inject fuel into the combustion chamber after the intake valve is closed. On page 24, Bryant teaches injecting fuel into the engine "the fuel can be injected later, similar to diesel operation, and can be injected at the usual point for diesel oil injection...". The skilled artisan has the knowledge of fuel injection techniques sufficient to understand and practice the invention with this teaching.

9. This rejection was proposed by the third party requestor in the request for reexamination, and it is being adopted essentially as proposed in the request for claims 1-6, 10, 21-22 and 25-30.

10. The third party requestor's proposal that claims 23-24 and 31-33 are unpatentable under 35 U.S.C. 102(b) over Bryant is not adopted since these claims recite a split fuel injection procedure having pilot and main fuel injection portions which are not disclosed by Bryant.

Claim Rejections - 35 USC § 103

The following is a quotation of 35 U.S.C. 103(a) which forms the basis for all obviousness rejections set forth in this Office action:

> (a) A patent may not be obtained though the invention is not identically disclosed or described as set forth in section 102 of this title, if the differences between the subject matter sought to be patented and the prior art are such that the subject matter as a whole would have been obvious at the time the invention was made to a person having ordinary skill in the art to which said subject matter pertains. Patentability shall not be negatived by the manner in which the invention was made.

Ground 2:

11. Claims 7-12 of the Weber et al. patent are unpatentable under 35 U.S.C. 103(a) over Bryant in view of Vulliamy or Challen et al.

12. As set forth on pages 2-5 of the request, Bryant discloses each method step of operating an internal combustion engine specified in claims 1-6 including the steps of supplying a mixture of pressurized air and recirculated exhaust gas to the intake port of the combustion chamber, and selectively controlling the opening of the intake valve to allow the mixture to flow between the combustion chamber and the intake manifold during a majority portion of a compression stroke of the engine piston, and controlling a fuel supply system to inject fuel into the combustion chamber after the intake valve is closed. Bryant teaches that alternative turbocharger arrangements may be employed, such as a second compressor on the shaft. As set forth on pages 5-7 of the request, Vulliamy and the Challen et al. publication disclose two-stage turbo chargers and their advantages. It would have been obvious to one or ordinary skill in the engine art to modify the engine disclosed by Bryant to incorporate a two-stage turbocharger as taught by Vulliamy or Challen et al in order to achieve the desirable results taught by

Vulliamy and Challen et al. since Bryant contemplates a secondary compressor and because Vulliamy and Challen et al teach their use and advantages.

13. This rejection was proposed by the third party requestor in the request for reexamination, and it is being adopted essentially as proposed in the request for claims 7-12.

Ground 3:

14. Claims 13, and 15-16 of the Weber et al. patent are unpatentable under 35 U.S.C. 103(a) over Bryant in view of Letang et al. US Patent 5,445,128.

15. As set forth on pages 8-9 of the request, Bryant discloses an internal combustion engine including a block, a cylinder with a piston and a head having intake and exhaust ports and a fuel supply system for injecting fuel into the intake port of the combustion chamber, a turbocharger having two compressors and selectively controlling the opening of the intake valve to allow the intake valve to remain open during a portion of the compression stroke of the piston. Not specifically disclosed by Bryant is single controller (ECM) for controlling the intake valve operating mechanism and the fuel injection system. However, as set forth on page 9 of the request, Letang et al teach using a single comprehensive controller to control various functions of an internal combustion engine control system and the benefits thereof. It would have been obvious to one of ordinary skill in the art at the time of the invention to modify the engine disclosed by Bryant by providing a single controller (ECM) for controlling intake valve

system and the fuel injection system as taught by Letang et al because of the known advantages of lower cost and fewer parts as taught by Letang et al.

16. This rejection was proposed by the third party requestor in the request for reexamination, and it is being adopted essentially as proposed in the request for claims 13, and 15-16. The proposed rejection of claim 14 is not adopted since the second compressor is not coupled with the turbine shaft as recited in this claim.

Ground 4:

17. Claim 14 of the Weber et al. patent are unpatentable under 35 U.S.C. 103(a) over Bryant in view of Letang et al., further in view of Gladden et al., US Patent 6,301,889, or the Challen publication.

18. As set forth on pages 9-10 of the request, Bryant discloses an internal combustion engine including a block, a cylinder with a piston and a head having intake and exhaust ports and a fuel supply system for injecting fuel into the intake port of the combustion chamber, a turbocharger having two compressors and selectively controlling the opening of the intake valve to allow the intake valve to remain open during a portion of the compression stroke of the piston. A single controller is known as taught by Letang et al. as described above. Not specifically disclosed by Bryant is a second compressor coupled with the first turbine. However, as set forth on page 10 of the request, Gladden et al. and Challen et al. teach coupling two compressors to a single turbine and the benefits thereof. It would have been obvious to one of ordinary skill in the art at the time of the invention to modify the engine disclosed by Bryant by

providing a single controller (ECM) for controlling intake valve system and the fuel injection system as taught by Letang et al because of the known advantages of lower cost and fewer parts as taught by Letang et al. and to utilize known turbocharging using dual compressors coupled to a single turbine as taught by Gladden et al and Challen to increase cylinder pressure in a known advantageous fashion.

19. This rejection was proposed by the third party requestor in the request for reexamination, and it is being adopted essentially as proposed in the request for claim 14.

Ground 5:

20. Claims 23, 24 and 31-33 of the Weber et al. patent are unpatentable under 35 U.S.C. 103(a) over Bryant in view of the Obert publication.

21. As set forth on pages 11 of the request, Bryant discloses an internal combustion engine having a variable compression ratio, including a block, a cylinder with a piston and a head having intake and exhaust ports and method steps of pressurizing air with a turbocharger and supply the pressurized air to the intake manifold of the engine, and maintaining fluid communication between the combustion chamber and the intake manifold by selectively controlling the opening of the intake valve to allow the intake valve to remain open during a portion of the compression stroke of the piston, and injecting fuel into the combustion chamber during a portion of the combustion stroke. However, Bryant does not disclose split fuel injection (i.e. pilot and main injection portions). However, Obert teaches split fuel injection and its advantages. It would

have been obvious to one of ordinary skill in the art to modify the engine operating method disclosed by Bryant to include split fuel injection as taught by Obert since the advantages of split fuel injection are well known, such as less Nox emissions and the elimination of noise.

22. This rejection was proposed by the third party requestor in the request for reexamination, and it is being adopted essentially as proposed in the request for claims 23, 24 and 31-33.

STATEMENT OF REASONS FOR PATENTABILITY AND/OR CONFIRMATION

The following is an examiner's statement of reasons for patentability and/or confirmation of the claims found patentable in this reexamination proceeding: Claims 17-20 are confirmed:

Claims 17-20 are patentable over the prior art patents and printed publications because of the recitation of specific cam lobe features within a cam-operated fuel injection system in combination with a cam-operated, variable valve operating system and a specific turbocharging arrangement.

Any comments considered necessary by PATENT OWNER regarding the above statement must be submitted promptly to avoid processing delays. Such submission by the patent owner should be labeled: "Comments on Statement of Reasons for Patentability and/or Confirmation" and will be placed in the reexamination file.

Other Art Made of Record

The art is cited to show engines having subcharging produced by controlling the opening and closing of the intake valve in internal combustion engines.

Response to Arguments

23. Owner's arguments filed 1/24/05 have been fully considered but they are not persuasive for the reasons set forth by Examiner below and for the reasons set forth by the third party requestor in paper filed on 2/25/05. The declarations by Dr. John Moskwa and Dr. Joel Hiltner, and Jack Ekchian and David Marrion, all of whom certainly qualify as experts in the art, have been fully considered. The Examiner adopts the reasoning generally as set forth by the third party requestor in the paper filed 2/25/05.

24. The Bryant reference teaches the claimed elements in a reasonable manner that would allow one of ordinary skill in the art to practice the invention. Specifically, Bryant discloses controlling the intake valve to remain open for a majority of the compression stroke and also teaches using fuel injection in the engine. Examiner does not agree with Owner's arguments of lack of disclosure regarding fuel supply to the engine. Bryant teaches various fueling arrangements, including fuel injection similar to diesel operation in his description of fueling his engine. Bryant, page 24, lines 1-3 states, "The fuel can be injected later, similar to diesel operation, and can be injected at the usual point for diesel oil injection...". One of ordinary skill in the art would understand that the

engine can be fuel injected and Bryant offers a point in time for the injection--there is no confusion on the part of one of ordinary skill in the art regarding fuel injection as suggested by the Owner and its Declarants. The skilled artisan has knowledge regarding fuel injection to use the Bryant teaching to provide fuel injection to the engine utilizing the claimed engine cycle. In fact, Owner states in Weber Patent number 6,688,280 on column 11, lines 40-49, "It will be apparent to those skilled in the art that various modifications and variations can be made in the disclosed air and fuel supply system for an internal combustion engine without departing from the scope and spirit of the invention. Other embodiments of the invention will be apparent to those skilled in the art from consideration of the specification and practice of the invention disclosed herein. It is intended that the specification and examples be considered as exemplary only." It appears Owner appreciated the level of skill at the time of filling for the Weber patent. Owner now indicates that with regard to Bryant's disclosure, that holding the intake valve open for a portion of compression stroke will create special, unforeseen fuel injection problems which require a more detailed description of the fuel injection for the skilled artisan to understand the invention. Examiner does not agree.

Generally, an engine cycle which holds the intake valve open for a portion of the compression stroke is known in the art. The well-known Miller Cycle developed in the late 1940s uses this technique, as do various modifications and improvements of the Miller Cycle. In fact, the Patent Office classification system in class 123 internal combustion engines classifies the subject matter as subcharging. The class 123

subclass 316 (123/316) definition reads in part , "Subject matter wherein some part of the charge is bled from the cylinder under compression, stored and then returned to the system upon a subsequent intake stroke." Fuel injection was not the main inventive concept of the Bryant document—subcharging was the main inventive concept. It seems reasonable that the known fueling options are listed at the end of each section in Bryant in a generalized fashion since injecting fuel into the cylinder is known and conventional and well understood by the skilled artisan. The document should not fail as an anticipatory reference since the teaching of fuel injection is adequate to allow one of ordinary skill to practice the invention because the skilled artisan has his own knowledge of typical fuel injection arrangements, timings, etc. Moreover, providing fuel injection to an engine is not considered to be beyond the skill level of one of ordinary skill in the art-this does not change for an engine cycle wherein the intake valve is held open for a portion of the intake stroke. Given the fact that the Bryant disclosure includes a teaching of fuel injection at the "usual point for diesel oil injection", combined with the artisan's knowledge of fuel injection techniques, Examiner believes fuel injection is adequately disclosed to allow one of ordinary skill in the art to understand how to practice the invention. Regarding early versus late intake valve closing, both types of subcharging engines are generally known—many prior documents discuss both types of these subcharging engine cycles. Bryant's teaching of fuel injection applies to both types of subcharging engines because of what is known by one of ordinary skill in the art.

25. The secondary references teach other known elements of the claims in a fashion allowing one of ordinary skill in the art to practice the invention. Vulliamy and Challen et al teach 2 stage turbochargers. Letang teaches using a single ECM. Weber teaches the use of dual turbocharger compressors. The Obert publication discloses the known procedure of split fuel injection having pilot and main injection portions and its advantages. The skill artisan in the engine art can take these teachings, combined with their knowledge of the art and utilize these known elements to create desirable engine operation.

Conclusion

This is an ACTION CLOSING PROSECUTION (ACP); see MPEP § 2671.02.

(1) Pursuant to 37 CFR 1.951(a), the patent owner may once file written comments limited to the issues raised in the reexamination proceeding and/or present a proposed amendment to the claims which amendment will be subject to the criteria of 37 CFR 1.116 as to whether it shall be entered and considered. Such comments and/or proposed amendments must be filed within a time period of 30 days or one month (whichever is longer) from the mailing date of this action. Where the patent owner files such comments and/or a proposed amendment, the third party requester may once file comments under 37 CFR 1.951(b) responding to the patent owner's submission within 30 days from the date of service of the patent owner's submission on the third party requester.

(2) If the patent owner does not timely file comments and/or a proposed amendment pursuant to 37 CFR 1.951(a), then the third party requester is precluded from filing comments under 37 CFR 1.951(b).

(3) Appeal **cannot** be taken from this action, since it is not a final Office action.

26. **All** correspondence relating to this *inter partes* reexamination proceeding should be directed:

By Mail to: Mail Stop *Inter Partes* Reexam
Central Reexamination Unit
Office of Patent Legal Administration
United States Patent & Trademark Office
P.O. Box 1450
Alexandria, VA 22313-1450

By FAX to: (571) 273-9900
Central Reexamination Unit

By hand: Customer Service Window
Randolph Building
401 Dulany Street
Alexandria, VA 22313

Any inquiry concerning this communication or earlier communications from the examiner, or as to the status of this proceeding, should be directed to the Central Reexamination Unit at telephone number (571) 272-7705.

Thomas N. Moulis
Primary Examiner

Noah P. Kamen
Primary Examiner
CONFEREE

Andrew M. Dolinar
Primary Examiner
CONFEREE

1:05-cv-01394-MMM-JAG # 28-29 Page 1 of 12

E-FILED
Thursday, 09 February, 2006 05:38:21 PM
Clerk, U.S. District Court, ILCD

UNITED STATES PATENT AND TRADEMARK OFFICE
COMMISSIONER FOR PATENTS
UNITED STATES PATENT AND TRADEMARK OFFICE
P.O. BOX 1450
ALEXANDRIA, VA 22313-1450
www.uspto.gov

CONTROL NO.	FILING DATE	PATENT IN REEXAMINATION	ATTORNEY DOCKET NO.
95/000049	08/27/2004	6651618	

Finnegan Henderson Farabow Garrett
& Dunner LLP
901 New York Avenue NW
Washington DC 20001-4413

EXAMINER
Thomas N. Moulis

ART UNIT	PAPER
3747	

DATE MAILED:

09/22/05

INTER PARTES REEXAMINATION COMMUNICATION

BELOW/ATTACHED YOU WILL FIND A COMMUNICATION FROM THE UNITED STATES PATENT AND TRADEMARK OFFICE OFFICIAL(S) IN CHARGE OF THE PRESENT REEXAMINATION PROCEEDING.

All correspondence relating to this *inter partes* reexamination proceeding should be directed to the **Central Reexamination Unit** at the mail, FAX, or hand-carry addresses given at the end of this communication.

UNITED STATES PATENT AND TRADEMARK OFFICE

Commissioner for Patents
United States Patent and Trademark Office
P.O. Box 1450
Alexandria, VA 22313-1450
www.uspto.gov

DO NOT USE IN PALM PRINTER

(THIRD PARTY REQUESTER'S CORRESPONDENCE ADDRESS)

Louis T. Isaf
Womble Carlyle Sandrich & Rice PLLC
P. O. Box 7037
Atlanta GA 30357-0037

Transmittal of Communication to Third Party Requester
Inter Partes Reexamination

REEXAMINATION CONTROL NUMBER *95/000,049*.

PATENT NUMBER *6,651,618*.

TECHNOLOGY CENTER *3700*.

ART UNIT *3747*.

Enclosed is a copy of the latest communication from the United States Patent and Trademark Office in the above-identified reexamination proceeding. 37 CFR 1.903.

Prior to the filing of a Notice of Appeal, each time the patent owner responds to this communication, the third party requester of the *inter partes* reexamination may once file written comments within a period of 30 days from the date of service of the patent owner's response. This 30-day time period is statutory (35 U.S.C. 314(b)(2)), and, as such, it cannot be extended. See also 37 CFR 1.947.

If an *ex parte* reexamination has been merged with the *inter partes* reexamination, no responsive submission by any *ex parte* third party requester is permitted.

All correspondence relating to this inter partes reexamination proceeding should be directed to the **Central Reexamination Unit** at the mail, FAX, or hand-carry addresses given at the end of the communication enclosed with this transmittal.

ACTION CLOSING PROSECUTION (37 CFR 1.949)	Control No. 95/000,049	Patent Under Reexamination 6651618	
	Examiner Thomas N. Moulis	Art Unit 3747	

-- The MAILING DATE of this communication appears on the cover sheet with the correspondence address. --

Responsive to the communication(s) filed by:
Patent Owner on 24 January 2005
Third Party(ies) on 25 February 2005

Patent owner may once file a submission under 37 CFR 1.951(a) within 1 month(s) from the mailing date of this Office action. Where a submission is filed, third party requester may file responsive comments under 37 CFR 1.951(b) within 30-days (not extendable- 35 U.S.C. § 314(b)(2)) from the date of service of the initial submission on the requester. **Appeal cannot be taken from this action.** Appeal can only be taken from a Right of Appeal Notice under 37 CFR 1.953.

All correspondence relating to this inter partes reexamination proceeding should be directed to the **Central Reexamination Unit** at the mail, FAX, or hand-carry addresses given at the end of this Office action.

PART I. THE FOLLOWING ATTACHMENT(S) ARE PART OF THIS ACTION:

1. ☒ Notice of References Cited by Examiner, PTO-892
2. ☒ Information Disclosure Citation, PTO-1449 or PTO/SB/08
3. ☐ _____

PART II. SUMMARY OF ACTION:

1a. ☒ Claims 1-17 are subject to reexamination.
1b. ☐ Claims _____ are not subject to reexamination.
2. ☐ Claims _____ have been canceled.
3. ☐ Claims _____ are confirmed. [Unamended patent claims]
4. ☐ Claims _____ are patentable. [Amended or new claims]
5. ☒ Claims 1-17 are rejected.
6. ☐ Claims _____ are objected to.
7. ☐ The drawings filed on _____ ☐ are acceptable ☐ are not acceptable.
8 ☐ The drawing correction request filed on _____ is: ☐ approved. ☐ disapproved.
9 ☐ Acknowledgment is made of the claim for priority under 35 U.S.C. 119 (a)-(d). The certified copy has: ☐ been received. ☐ not been received. ☐ been filed in Application/Control No _____
10. ☐ Other _____

Grounds of Rejection

1. Ground 1: Claims 1-5, 8, 10 and 12-13 and 16-17 of the Coleman patent number 6,651,618 are unpatentable under 35 U.S.C. 102(b) over Bryant, WO 98/02653.

2. Ground 2: Claims 6, 7, 14 and 15 of the Coleman patent number 6,651,618 are unpatentable under 35 U.S.C. 103(a) over Bryant in view of Obert publication.

3. Ground 3: Claims 9 and 11 of the Coleman patent number 6,651,618 are unpatentable under 35 U.S.C. 103(a) over Bryant in view of Khair, US 5,927,075.

Claim Rejections - 35 USC § 102

4. The following is a quotation of the appropriate paragraphs of 35 U.S.C. 102 that form the basis for the rejections under this section made in this Office action:

> A person shall be entitled to a patent unless –
>
> (b) the invention was patented or described in a printed publication in this or a foreign country or in public use or on sale in this country, more than one year prior to the date of application for patent in the United States.

Ground 1:

5. Claims 1-5, 8, 10, 12-13 and 16-17 are rejected under 35 U.S.C. 102(b) as being anticipated by Bryant WO 98/02653.

6. As set forth on pages 2-5 of the request, Bryant discloses each method step of operating an internal combustion engine specified in claims 1-5, 8, 10, 12-13 and 16-17 including the steps of supplying a mixture of pressurized air and recirculated exhaust

gas to the intake port of the combustion chamber, and selectively controlling the opening of an intake valve to allow the mixture to flow between the combustion chamber and the intake manifold during a majority portion of a compression stroke of the engine piston, and controlling a fuel supply system to inject fuel into the combustion chamber after the intake valve is closed.

7. This rejection was proposed by the third party requestor in the request for reexamination, and it is being adopted essentially as proposed in the request for claims 1-5, 8, 10, 12-13 and 16-17. However, regarding the rejection of claim 3, the requestor's argument is not adopted. Bryant discloses that the selective operation of the variable intake valve is controlled based on engine conditions (e.g. engine load, speed, etc) on Page 18, lines 21- Page 19, line 1.

8. The third party requestor's proposal that Claims 6-7 and 14-15 are unpatentable under 35 U.S.C. 102(b) over Bryant is not adopted since these claims recite a split fuel injection procedure having pilot and main fuel injection portions which are not disclosed by Bryant.

Claim Rejections - 35 USC § 103

The following is a quotation of 35 U.S.C. 103(a) which forms the basis for all obviousness rejections set forth in this Office action:

> (a) A patent may not be obtained though the invention is not identically disclosed or described as set forth in section 102 of this title, if the differences between the subject matter sought to be patented and the prior art are such that the subject matter as a whole would have been obvious at the time the invention was made to a person having ordinary skill in the art to which said subject matter pertains. Patentability shall not be negatived by the manner in which the invention was made.

Ground 2:

9. Claims 6, 7, 14 and 15 of the Coleman patent are unpatentable under 35 U.S.C. 103(a) over Bryant in view of Obert.

10. As set forth on pages 2-5 of the request, Bryant discloses each method step of operating an internal combustion engine specified in claims 1-5, 8, 10, 12-13 including the steps of supplying a mixture of pressurized air and recirculated exhaust gas to the intake port of the combustion chamber, and selectively controlling the opening of the intake valve to allow the mixture to flow between the combustion chamber and the intake manifold during a majority portion of a compression stroke of the engine piston, and controlling a fuel supply system to inject fuel into the combustion chamber after the intake valve is closed. As set forth on pages 5-6 of the request, the Obert publication discloses the known procedure of split fuel injection having pilot and main injection portions and its advantages. It would have been obvious to one or ordinary skill in the engine art to utilize a pilot and main injection procedure in the engine disclosed by Bryant in order to achieve the desirable results taught by Obert.

11. This rejection was proposed by the third party requestor in the request for reexamination, and it is being adopted essentially as proposed in the request for claims 6, 7, 14 and 15.

Ground 3:

12. Claims 9 and 11 of the Coleman patent are unpatentable under 35 U.S.C. 103(a) over Bryant in view of Khair.

13. As set forth on pages 2-5 of the request, Bryant discloses each method step of operating an internal combustion engine specified in claims 1-5, 8 and 10 including the steps of supplying a mixture of pressurized air and recirculated exhaust gas to the intake port of the combustion chamber, and selectively controlling the opening of the intake valve to allow the mixture to flow between the combustion chamber and the intake manifold during a majority portion of a compression stroke of the engine piston, and controlling a fuel supply system to inject fuel into the combustion chamber after the intake valve is closed. Not disclosed by Bryant is a low-pressure loop EGR system. However, as set forth on pages 6-7 of the request, Khair shows in Fig. 2 an internal combustion engine 20 with a low-pressure loop EGR system 140. Exhaust gas from the low pressure loop EGR line 136 mixes with intake air, passes through compressor 26 of turbocharger 24, and then through cooler 32 to intake manifold 34 of the engine (column 4, line 65 - column 5, line 30). Khair discloses the advantages of utilizing low pressure EGR, such as lower NOx exhaust emissions. It would have been obvious to one of ordinary skill in the art at the time of the invention to provide the engine disclosed by Bryant with a low pressure loop EGR system in order to obtain the known advantages of lower NOx emissions as taught by Khair.

14. This rejection was proposed by the third party requestor in the request for reexamination, and it is being adopted essentially as proposed in the request for claims 9 and 11. The requestor's proposed rejection is not adopted for claims 8 and 10 because they are rejected under 35 U.S.C 102(b) over Bryant above.

15.

Response to Arguments

16. The declarations by Dr. John Moskwa and Dr. Joel Hiltner, and Jack Ekchian and David Marrion, all of whom certainly qualify as experts in the art, have been fully considered.

17. Owner's arguments filed 1/24/05 have been fully considered but they are not persuasive for the reasons set forth by Examiner below and for the reasons as set forth by the third party requestor in the paper filed 2/25/05. The Examiner adopts the reasoning generally as set forth by the third party requestor in the paper filed 2/25/05.

18. The Bryant reference teaches the claimed elements in a reasonable manner that would allow one of ordinary skill in the art to practice the invention. Specifically, Bryant discloses controlling the intake valve to remain open for a majority of the compression stroke and also teaches using fuel injection in the engine. Examiner does not agree with Owner's arguments of lack of disclosure regarding fuel supply to the engine. Bryant teaches various fueling arrangements, including fuel injection similar to diesel operation in his description of fueling his engine. Bryant, page 24, lines 1-3 states, "The fuel can be injected later, similar to diesel operation, and can be injected at the usual point for diesel oil injection...". One of ordinary skill in the art would understand that the engine can be fuel injected and Bryant offers a point in time for the injection, typically TDC with both valves closed—there is no confusion on the part of one of ordinary skill in the art regarding fuel injection as suggested by the Owner and its Declarants. The

skilled artisan has knowledge regarding fuel injection to use the Bryant teaching to provide fuel injection to the engine utilizing the claimed engine cycle. In fact, Owner states in Patent number 6,651,618 on column 13, lines 23-32, "It will be apparent to those skilled in the art that various modifications and variations can be made in the disclosed air and fuel supply system for an internal combustion engine without departing from the scope and spirit of the invention. Other embodiments of the invention will be apparent to those skilled in the art from consideration of the specification and practice of the invention disclosed herein. It is intended that the specification and examples be considered as exemplary only." It appears the Owner appreciated the level of skill in the art at the time of filing the patent application. Owner now indicates that with regard to Bryant's disclosure that holding the intake valve open for a majority of the compression stroke will create special, unforeseen fuel injection problems which require a more detailed description of the fuel injection system for the skilled artisan to understand the invention. Examiner does not agree.

Generally, an engine cycle which holds the intake valve open for a portion of the compression stroke is known in the art. The well-known Miller Cycle developed in the late 1940s uses this technique, as do various modifications and improvements of the Miller Cycle. In fact, the Patent Office classification system in class 123 internal combustion engines classifies the subject matter as subcharging. The class 123 subclass 316 (123/316) definition reads in part, "Subject matter wherein some part of the charge is bled from the cylinder under compression, stored and then returned to the

system upon a subsequent intake stroke." Fuel injection was not the main inventive concept of the Bryant document—subcharging was the main concept. It seems reasonable that the known fueling options are listed at the end of each section in Bryant in a generalized fashion since injecting fuel into the cylinder is known and conventional and well understood by the skilled artisan. The document should not fail as an anticipatory reference since the teaching of fuel injection is adequate to allow one of ordinary skill to practice the invention because the skilled artisan has his own knowledge of typical fuel injection arrangements, timings, etc. Moreover, it is not considered to be beyond the skill level of one of ordinary skill in the art-this does not change for an engine cycle wherein the intake valve is held open for a portion of the intake stroke. Given the fact that the Bryant disclosure includes a teaching of fuel injection at the "usual point for diesel oil injection", combined with the artisan's knowledge of fuel injection techniques, Examiner believes fuel injection is adequately disclosed to allow one of ordinary skill in the art to understand how to practice the invention. Regarding early versus late intake valve closing, both types of subcharging engines are generally known—many prior documents discuss both types of these subcharging engine cycles. Bryant's teaching of fuel injection applies to both types of subcharging engines because of what is known by one of ordinary skill in the art.

19. Supplying exhaust gas to an intake port of an engine is conventional in the art. Exhaust gas recirculation (EGR) is commonly utilized and within the level of knowledge of the skilled artisan. Supplying pressurized air to the intake port of an engine by

means of a compressor is also conventional. Bryant adequately teaches these known features adequately enough to allow one of ordinary skill in the art to practice the invention having these features since they are familiar with the conventional engine features of EGR and compressors.

20. The secondary references teach other known elements of the claims in a fashion allowing one of ordinary skill in the art to practice the invention. The Obert publication discloses the known procedure of split fuel injection having pilot and main injection portions and its advantages. It would have been obvious to one of ordinary skill in the engine art to utilize a pilot and main injection procedure in the engine disclosed by Bryant in order to achieve the desirable results taught by Obert because of the teachings of the secondary references and the knowledge level in the art of the skilled artisan. Pilot fuel injection is well known in the art to create smoother combustion in diesel engines and therefore creates the motivation to utilize such injection.

21. Khair discloses the advantages of utilizing low pressure EGR, such as lower NOx exhaust emissions. It would have been obvious to one of ordinary skill in the art at the time of the invention to provide the engine disclosed by Bryant with a low pressure loop EGR system in order to obtain the known advantages of lower NOx emissions as taught by Khair.

Conclusion

This is an ACTION CLOSING PROSECUTION (ACP); see MPEP § 2671.02.

(1) Pursuant to 37 CFR 1.951(a), the patent owner may once file written comments limited to the issues raised in the reexamination proceeding and/or present a proposed amendment to the claims which amendment will be subject to the criteria of 37 CFR 1.116 as to whether it shall be entered and considered. Such comments and/or proposed amendments must be filed within a time period of 30 days or one month (whichever is longer) from the mailing date of this action. Where the patent owner files such comments and/or a proposed amendment, the third party requester may once file comments under 37 CFR 1.951(b) responding to the patent owner's submission within 30 days from the date of service of the patent owner's submission on the third party requester.

(2) If the patent owner does not timely file comments and/or a proposed amendment pursuant to 37 CFR 1.951(a), then the third party requester is precluded from filing comments under 37 CFR 1.951(b).

(3) Appeal **cannot** be taken from this action, since it is not a final Office action.

22. **All** correspondence relating to this *inter partes* reexamination proceeding should be directed:

By Mail to: Mail Stop *Inter Partes* Reexam
Central Reexamination Unit
Office of Patent Legal Administration
United States Patent & Trademark Office
P.O. Box 1450
Alexandria, VA 22313-1450

By FAX to: (571) 273-9900
Central Reexamination Unit

By hand: Customer Service Window
Randolph Building
401 Dulany Street
Alexandria, VA 22313

Any inquiry concerning this communication or earlier communications from the examiner, or as to the status of this proceeding, should be directed to the Central Reexamination Unit at telephone number (571) 272-7705.

Thomas N. Moulis
Primary Examiner

Tony M. Argenbright
Primary Examiner
Art Unit 3747
conferee

Noah P. Kamen
Primary Examiner
conferee

E-FILED
Thursday, 09 February, 2006 05:38:44 PM
Clerk, U.S. District Court, ILCD

EXHIBIT PM

Due to the voluminous size of this Exhibit, the pictures and charts included therein, this Exhibit is being filed conventionally with the Clerk's Office.