E-FILED
Wednesday, 21 December, 2005 12:43:14 PM
Clerk, U.S. District Court, ILCD

Caterpillar Inc. v. Entec Engine Corporation and Clyde C. Bryant

CATERPILLAR INC.'S COMPLAINT FOR DECLARATORY RELIEF

EXHIBIT "B"
Part II

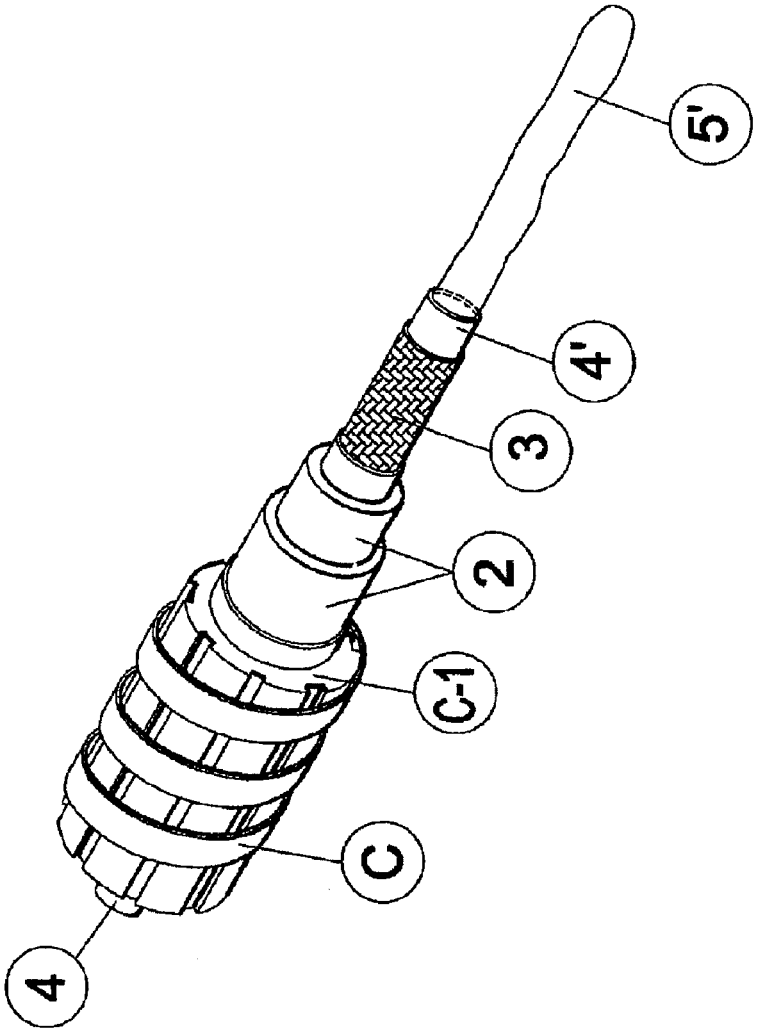

FIG 23

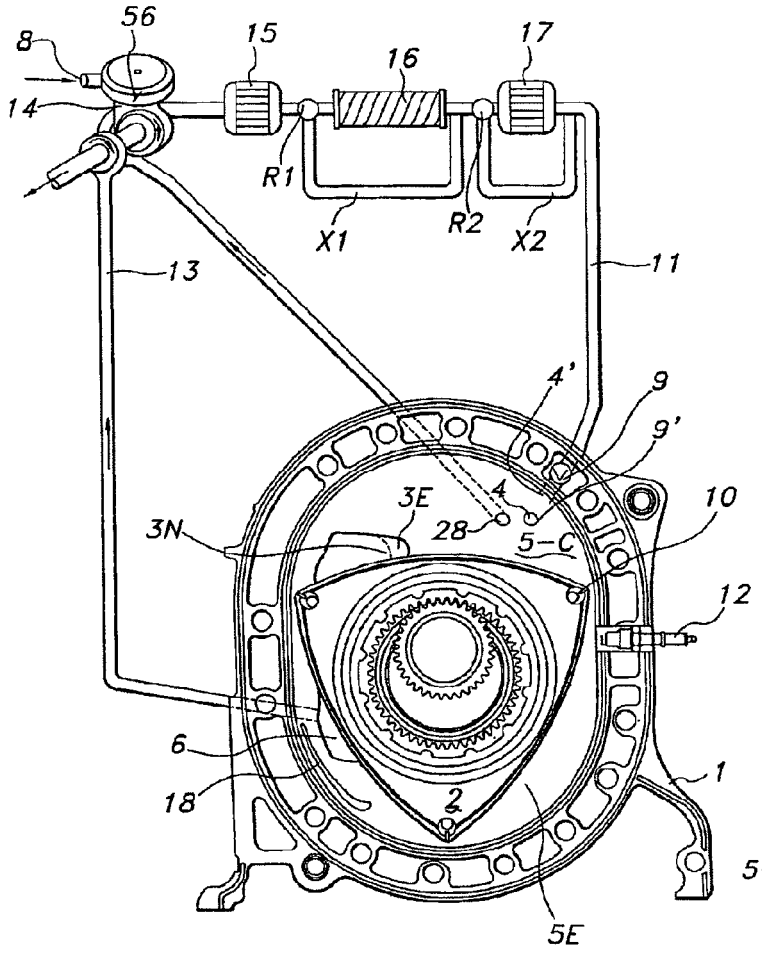

FIG 24

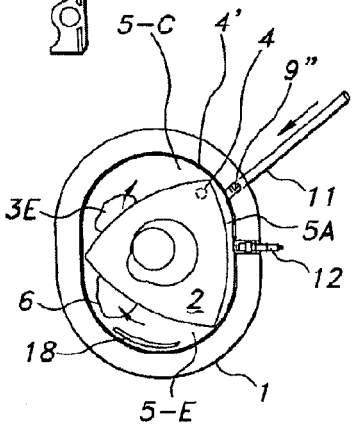

FIG 24B

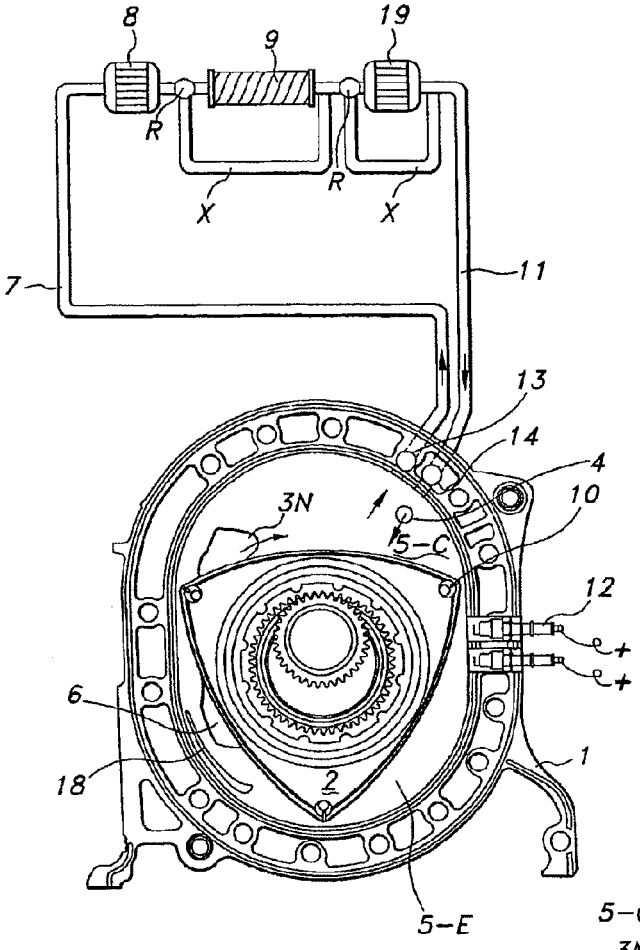

FIG 25

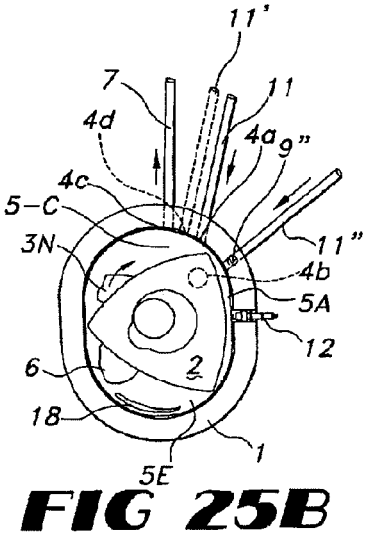

FIG 25B

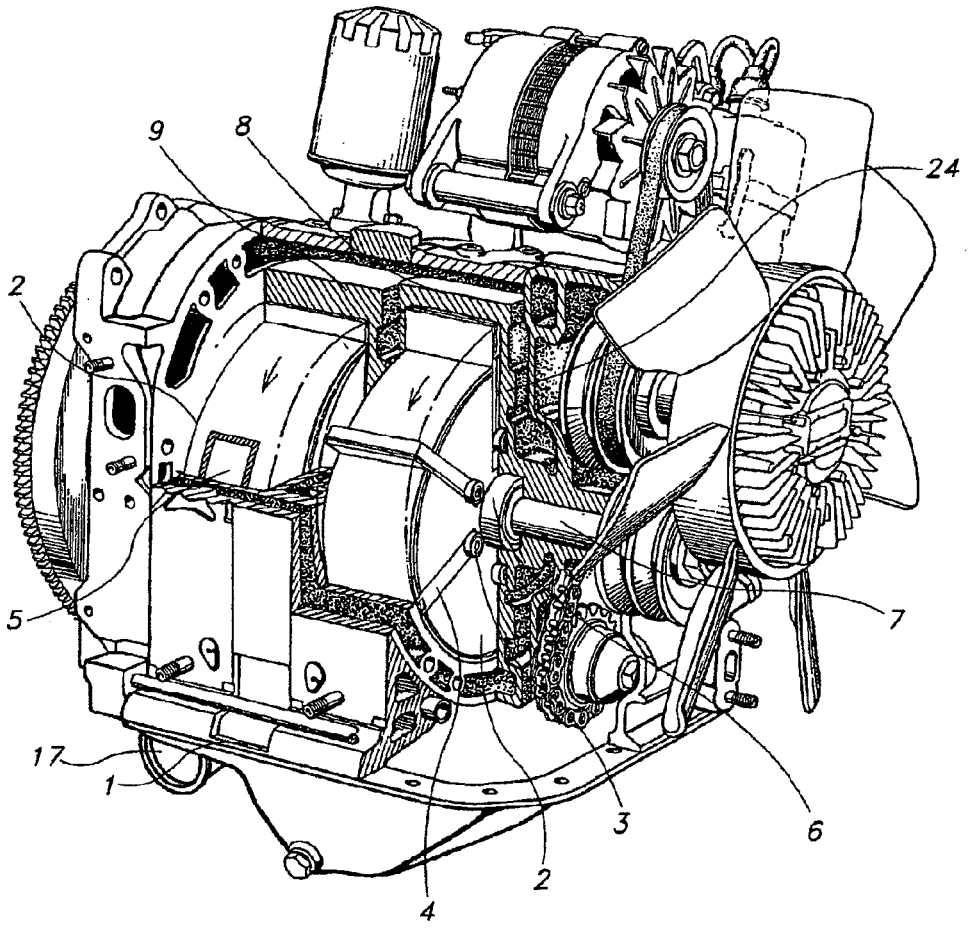

FIG 26

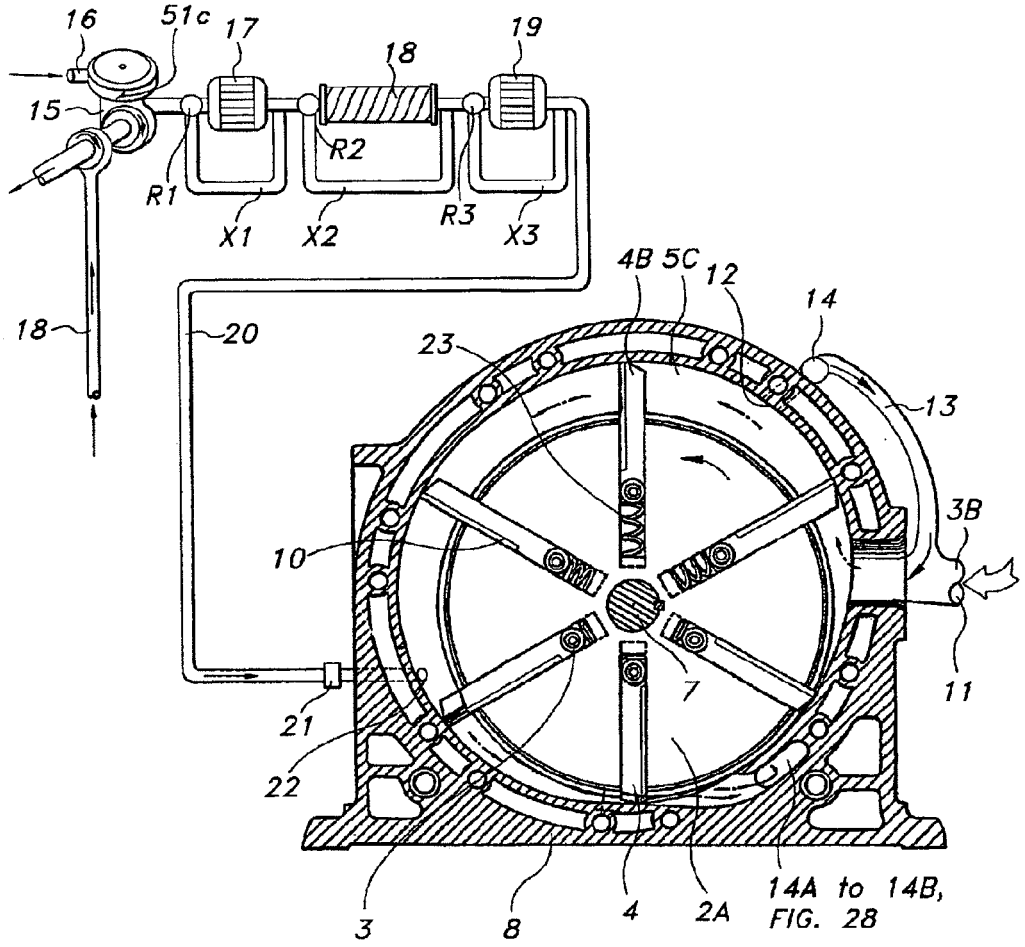
16
51c
17
18
19
15
R1
R2
R3
X1
X2
X3
18
20
4B
5C
12
14
23
13
3B
10
11
7
21
22
3
8
4
2A
14A to 14B,
FIG. 28

FIG 27

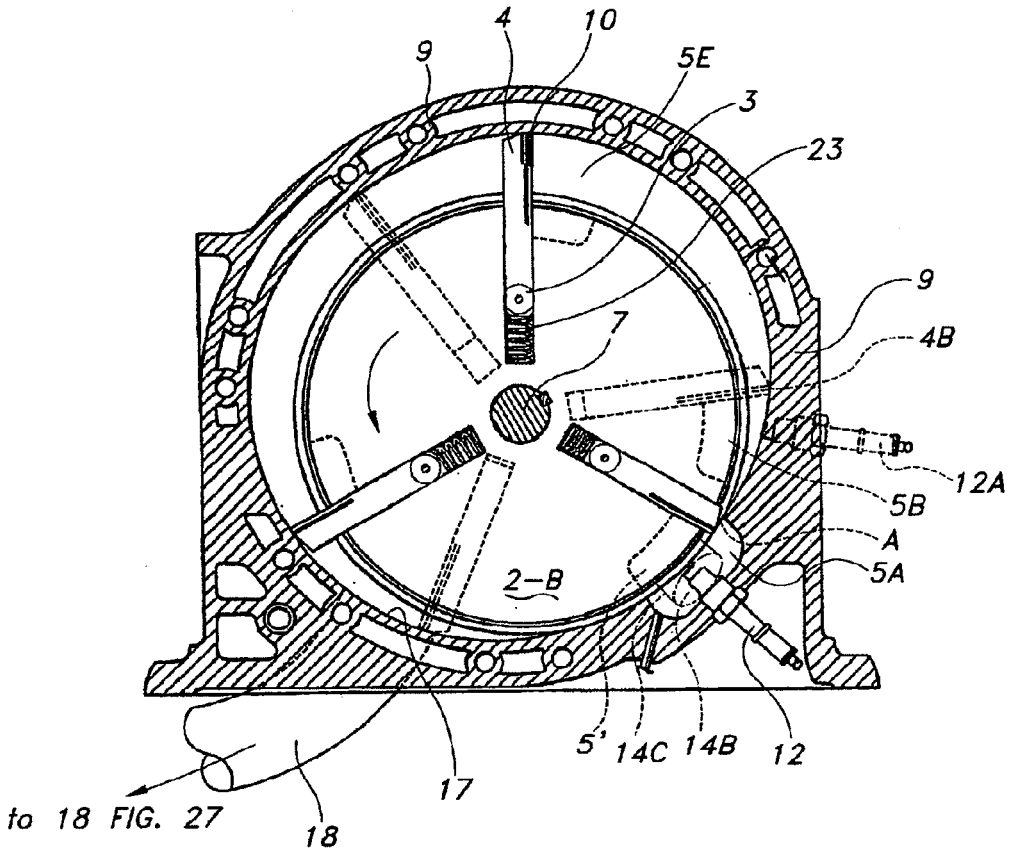

FIG 28

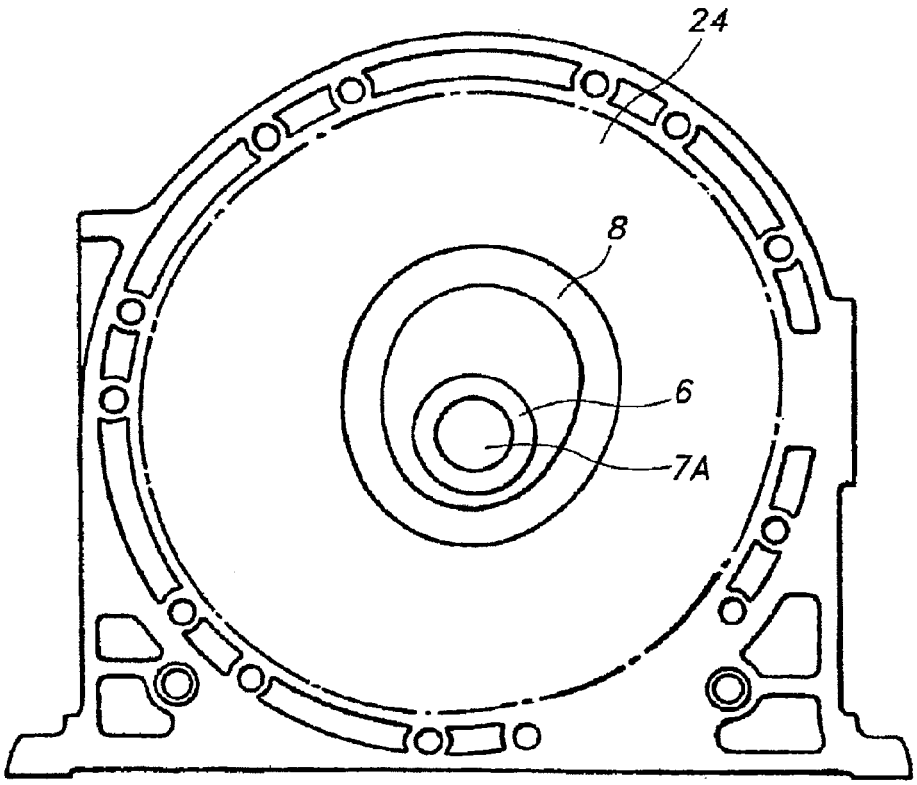

FIG 29

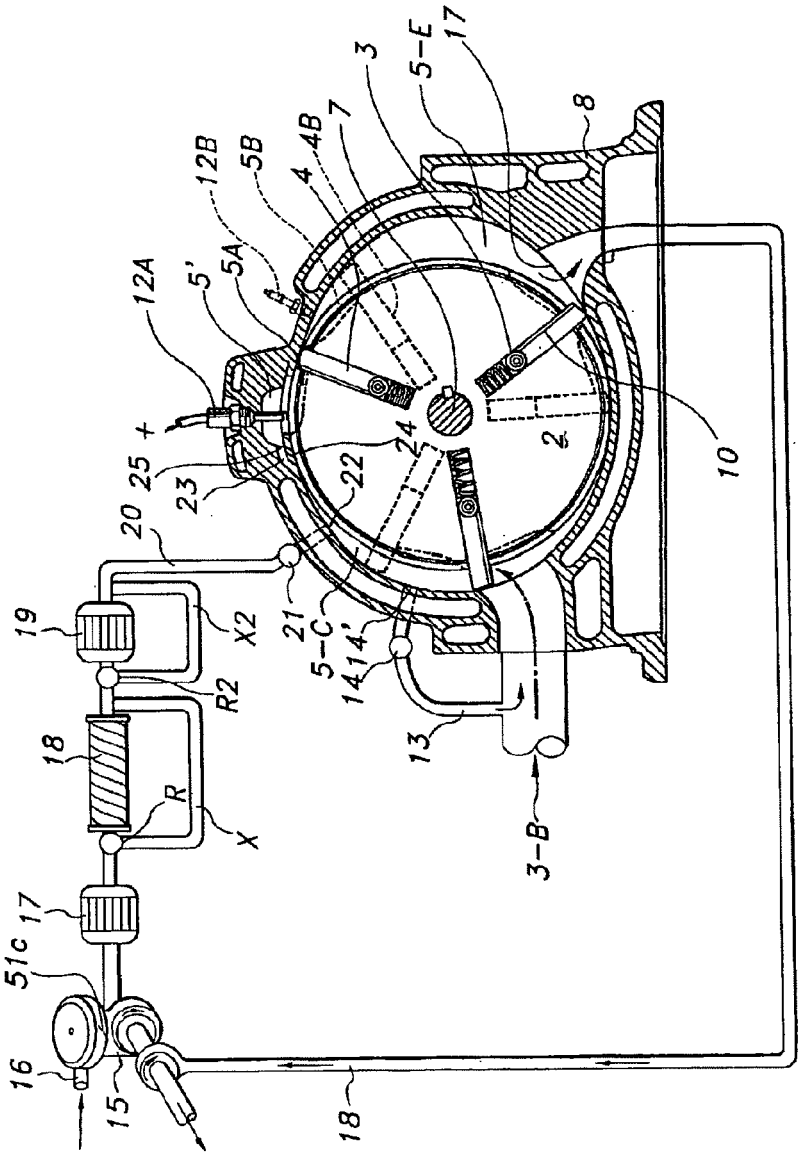
3
5-E
17
8
7
4B
12B
5B
4
5'
5A
12A
25 +
23
20
22
24
2
10
19
X2
21
5-C
14'
R2
18
R
X
13
3-B
17
51c
16
15
18

FIG 30

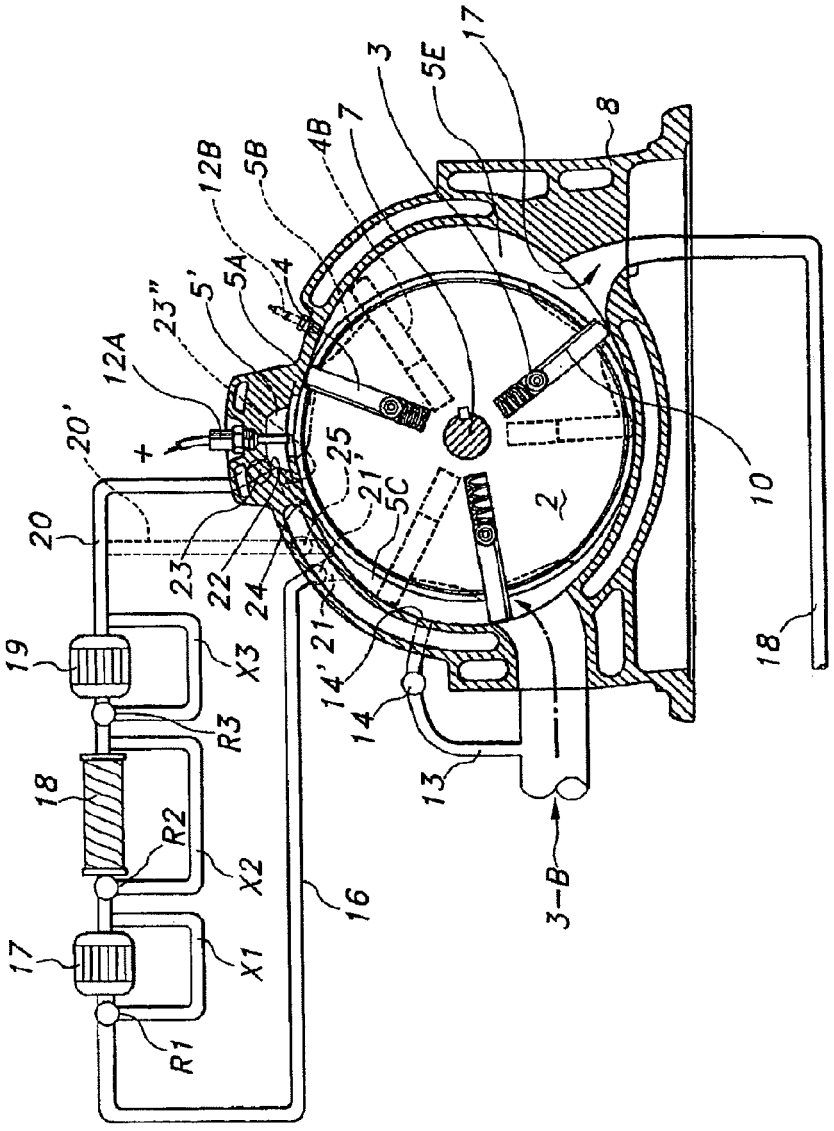
17
5E
3
8
7
4B
5B
12B
4
5A
5'
23"
12A
20'
+
25
21'
5C
2
10
20
23
22
24
21
14'
14
13
3-B
18
19
X3
R3
18
R2
X2
16
17
X1
R1

FIG 31