E-FILED
Wednesday, 21 December, 2005 12:41:44 PM
Clerk, U.S. District Court, ILCD

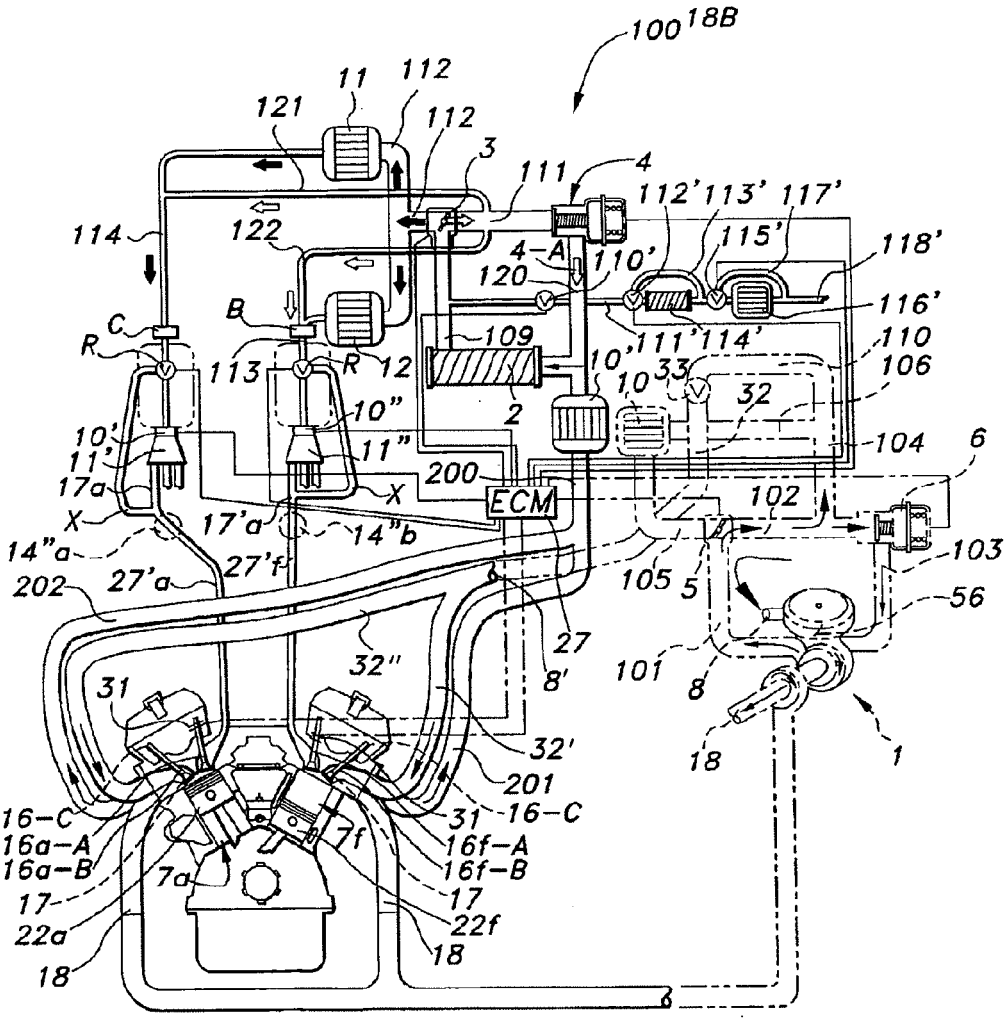

FIG 18B

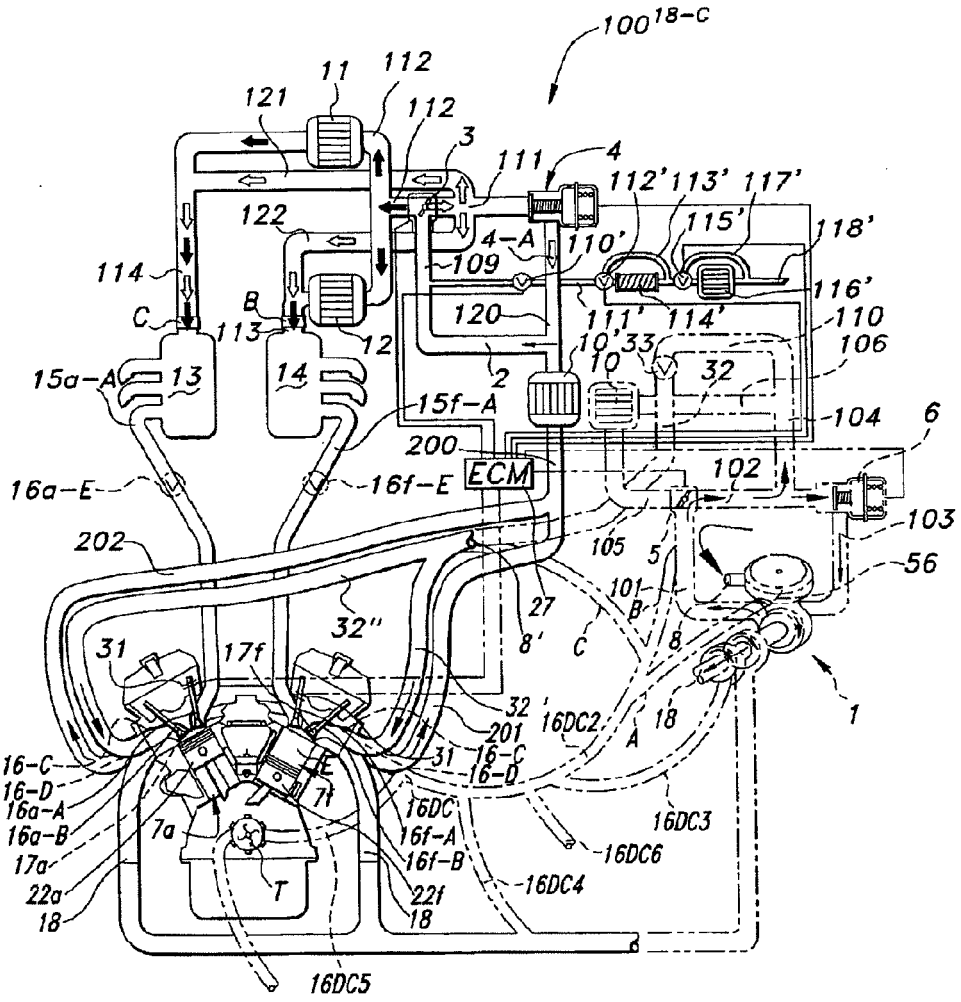
100
18-C
11
112
121
112
3
111
4
112'
113'
117'
122
115'
118'
4-A
110'
114
109
116'
C
B
120
111'
114'
110
113
12
10'
33
106
15a-A
13
14
2
10
32
15f-A
104
6
200
ECM
102
16a-E
16f-E
103
202
105
5
56
101
B
27
32"
8'
C
8
31
17f
32'
201
16DC2
A
18
1
16-C
16-D
16a-A
16a-B
17a
22a
18
7f
7a
T
16DC
16f-A
16f-B
22f
18
16DC4
16DC6
16DC3
16DC5

FIG 18C

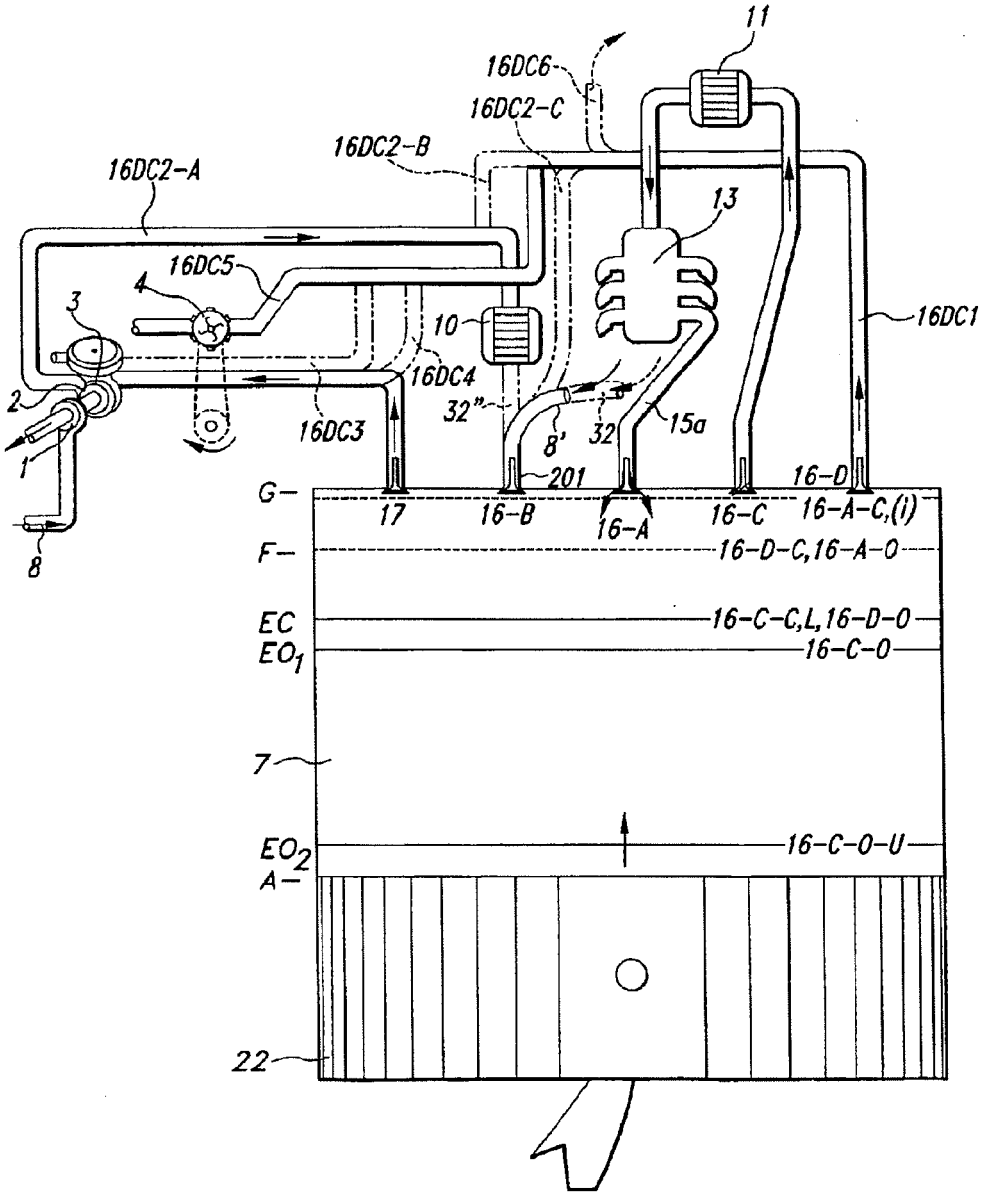
11
16DC6
16DC2-C
16DC2-B
16DC2-A
13
16DC5
4
3
10
16DC1
16DC4
2
32"
8'
32
15a
16DC3
1
201
16-D
G—
17
16-B
16-A
16-C
16-A-C,(I)
F—
16-D-C,16-A-O
EC
16-C-C,L,16-D-O
EO1
16-C-O
8
7
EO2
16-C-O-U
A—
22

FIG 18D

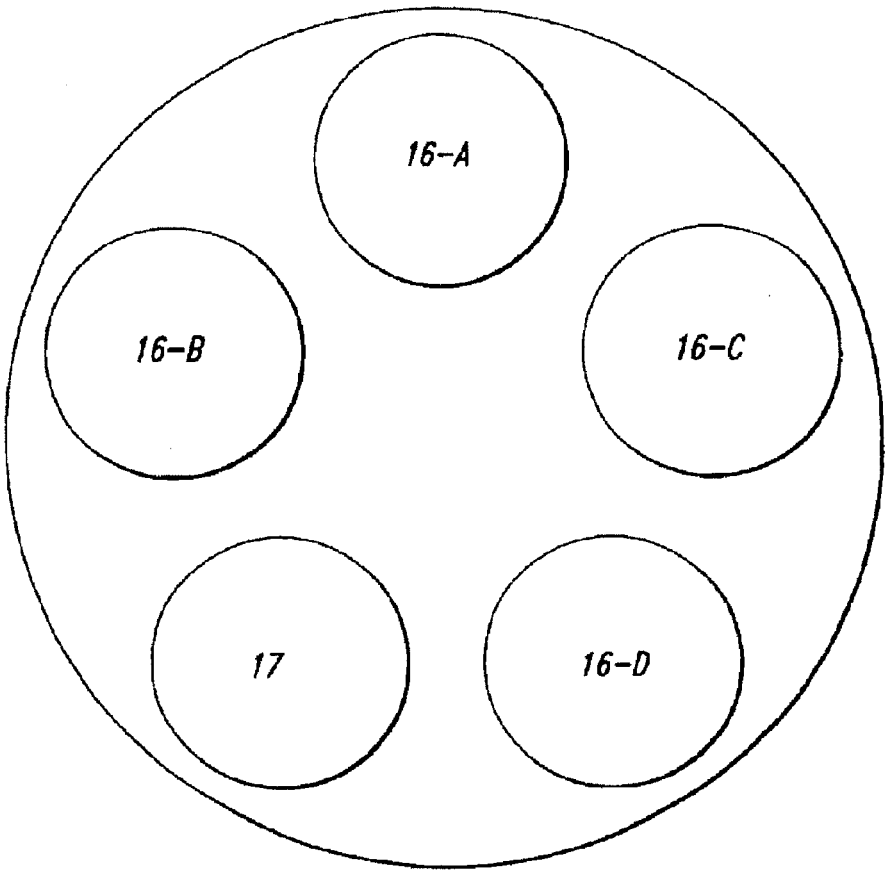

FIG 18E

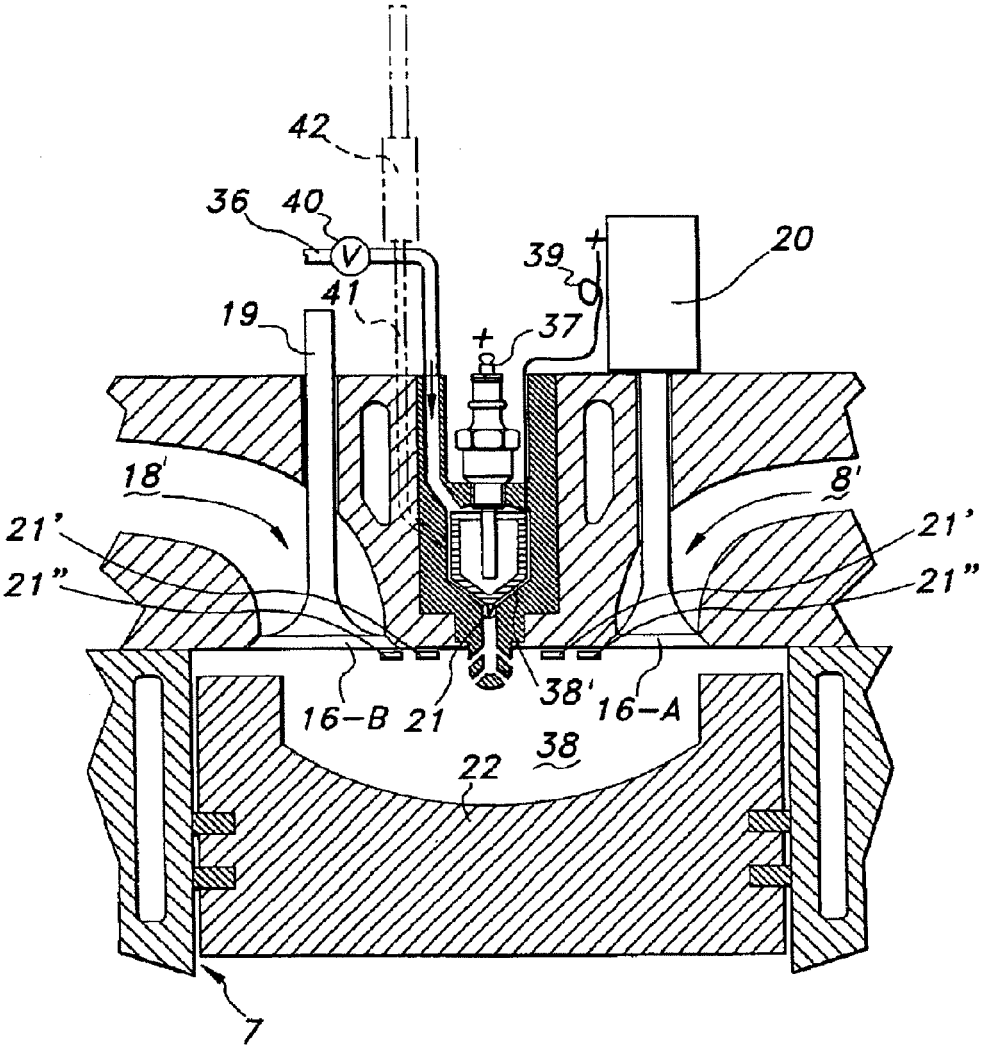

FIG 19

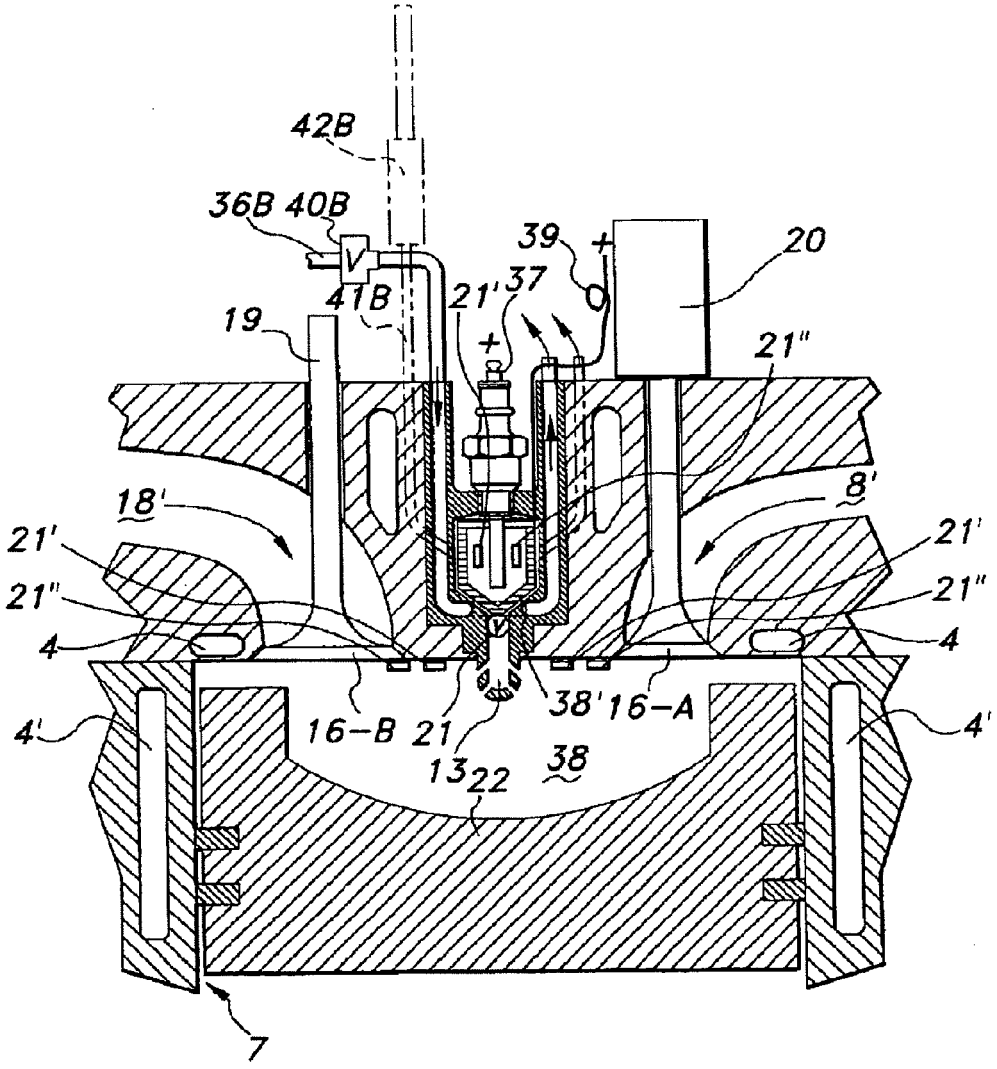

FIG 19B

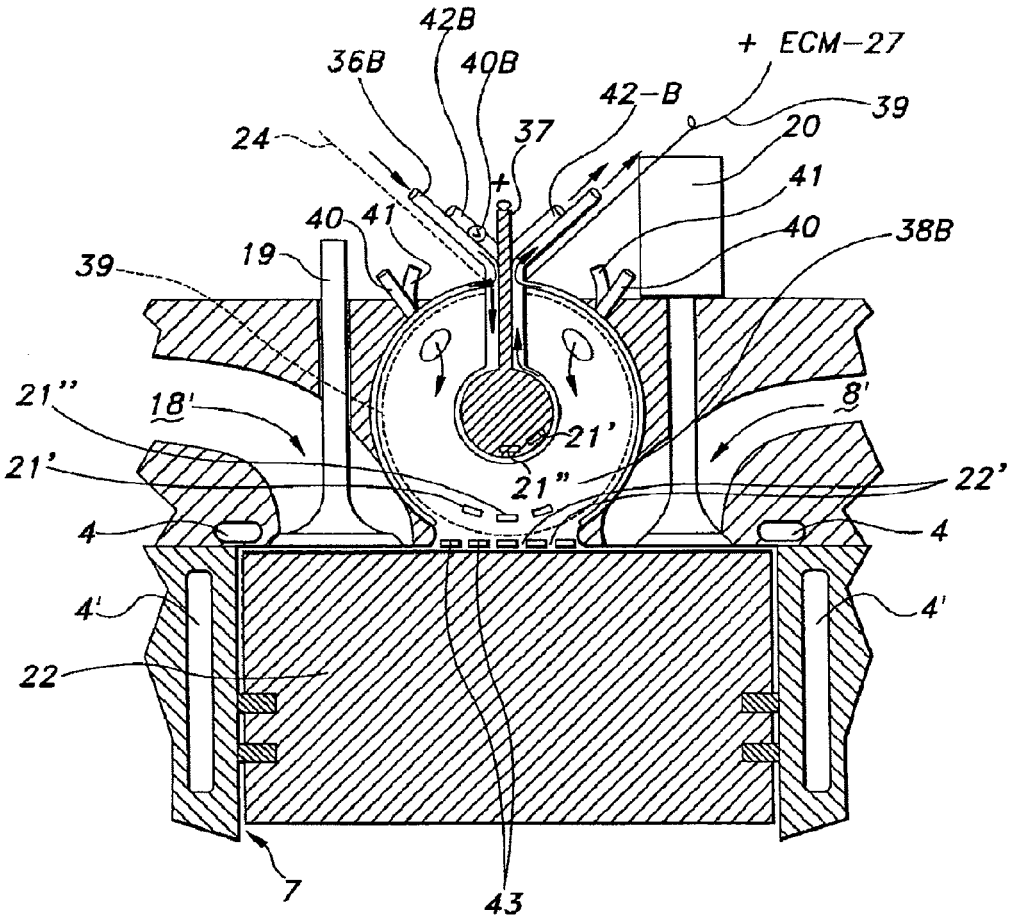
42B
36B
40B
+ ECM-27
42-B
39
24
37
20
41
40 41
40
38B
19
39
21''
18'
8'
21'
21'
21''
22'
4
4
4'
4'
22
7
43

FIG 19C

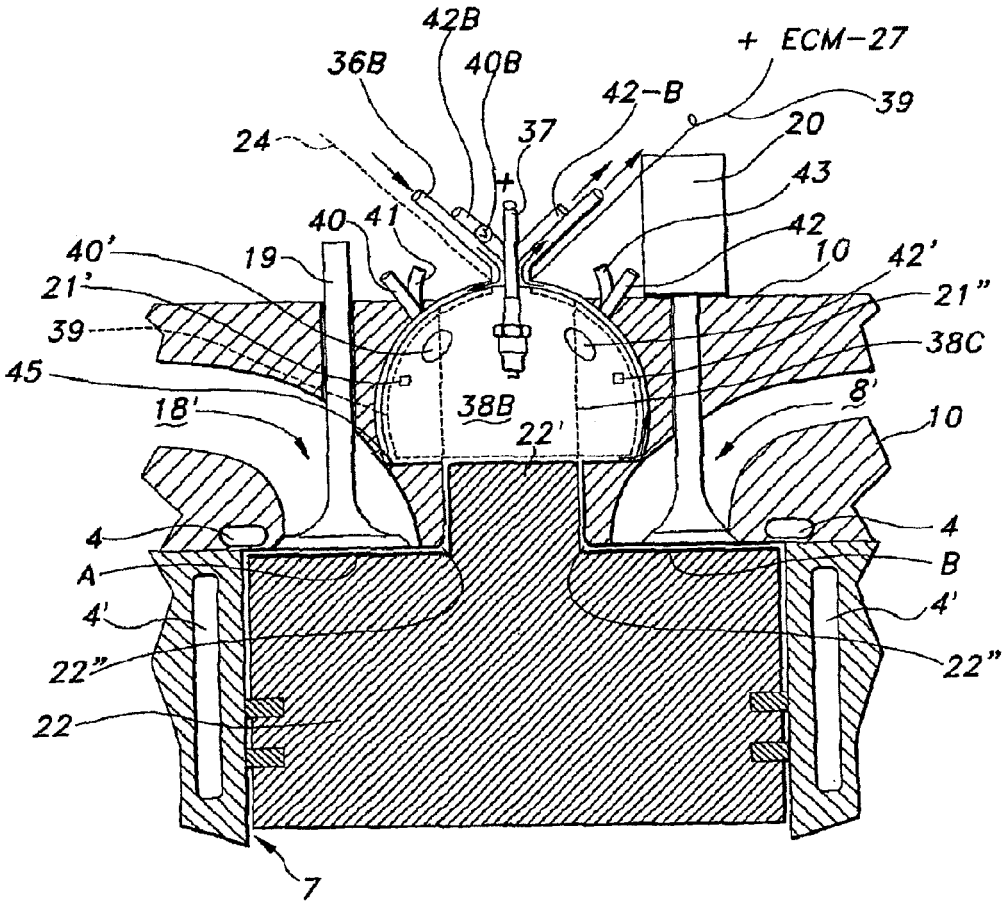
42B
36B
40B
+ ECM-27
42-B
39
24
37
20
43
40
41
42
40'
19
10
42'
21'
21"
39
38C
45
38B
8'
18'
22'
10
4
4
A
B
4'
4'
22"
22"
22
7

FIG 19D

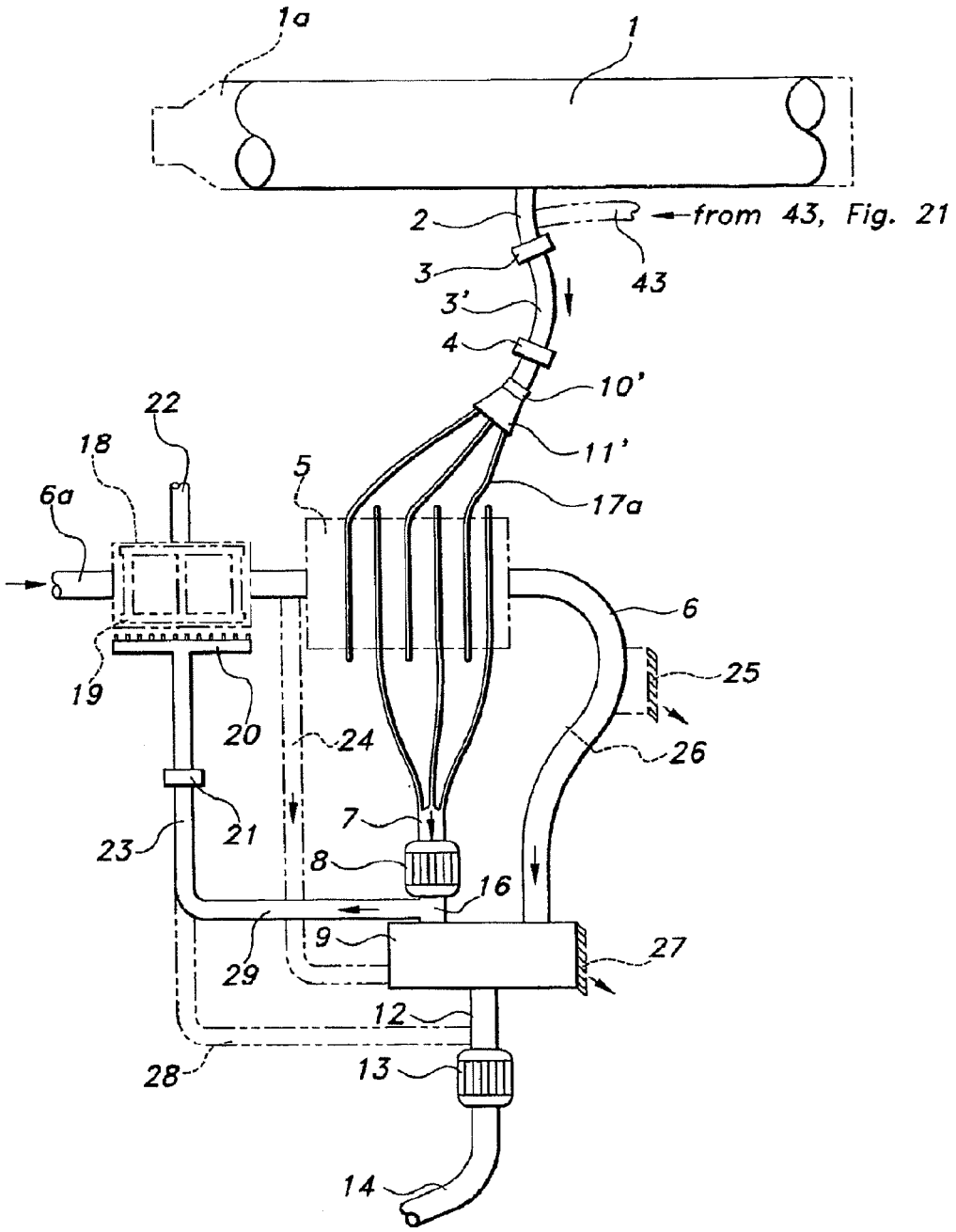
1a
1
2
from 43, Fig. 21
3
43
3'
4
10'
22
18
11'
5
17a
6a
6
25
19
20
24
26
21
7
23
8
16
9
27
29
12
28
13
14

FIG 20

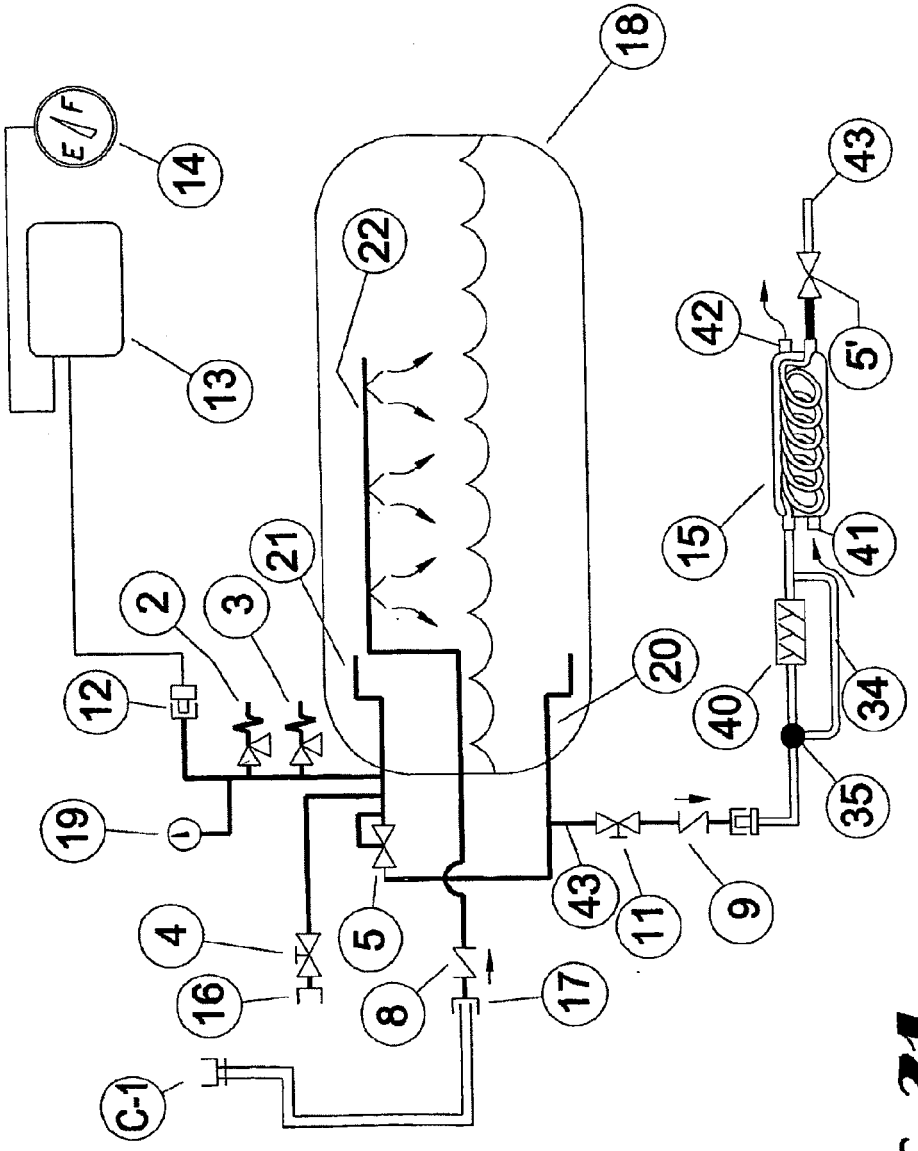

FIG 21

Addendum to Fig. 21

ITEM	DESCRIPTION	FUNCTIONS
2	Secondary Relief Valve	Used to limit pressure in fuel tank.
3	Primary Relief Valve	Used to limit pressure in fuel tank.
4	Manual Vent Valve	Used to vent pressure from the fuel tank.
5	Economizer Regulator	Used to control operating pressure of the fuel tank.
8	Fill Check Valve	Used to prevent reverse flow in the fill line.
9	Excess Flow Valve	Used to restrict excess flow in event of a fuel line breakage.
11	Fuel Shut off Valve	Used to shut off fuel supply.
12	Probe Connection	Used to "feed thru" capacitor signal from tank to fuel sender.
13	Fuel Gauge Sending Unit	Used to convert the capacitance signal for the fuel gauge.
14	Fuel Gauge	Used to display fuel level in the tank.
15	Vaporizer	Used to convert the liquid fuel to gaseous fuel.
16	Vent Connection	Used to connect to the vent line.
17	Filling Connection	Used to fill the LNG fuel tank.
18	LNG Tank	Used to store LNG and supply fuel to the engine.
19	Fuel Tank Pressure Gauge	Used to display fuel tank pressure.
20	Liquid Withdrawal Tube	Used to deliver liquid.
21	Vapor Withdrawal Tube	Used to deliver vapor.
22	Liquid Spray Bar	Used to top fill the tank and collapse the vapor.
C-1	Remote Fill Connection	Used to fill the LNG Fuel Tank.

FIG 22