E-FILED
Wednesday, 21 December, 2005 12:39:25 PM
Clerk, U.S. District Court, ILCD



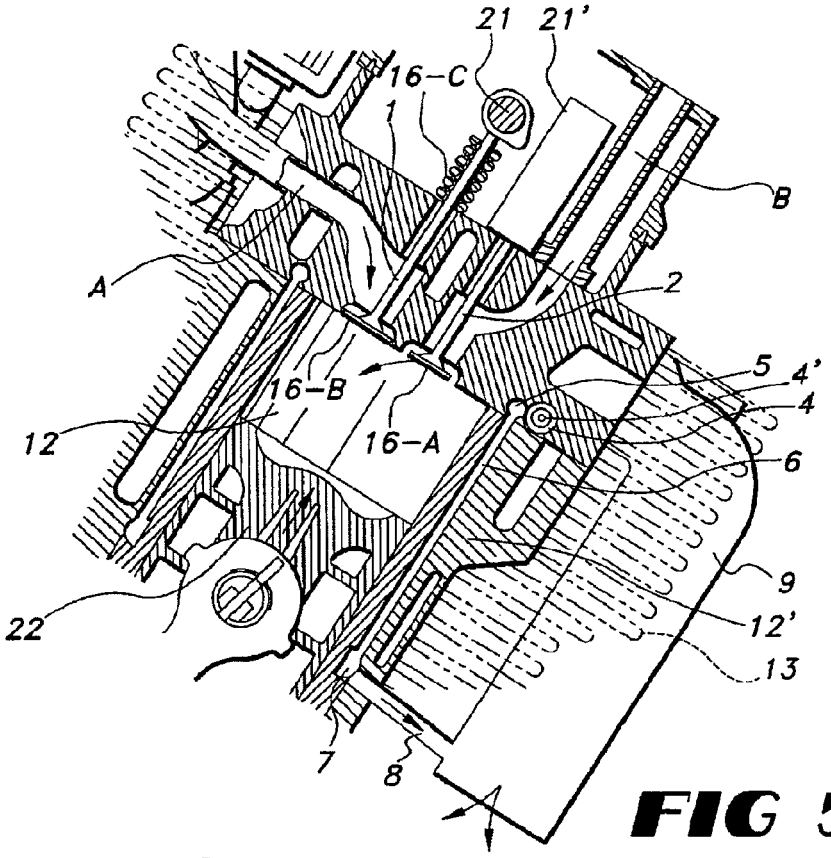


FIG 5

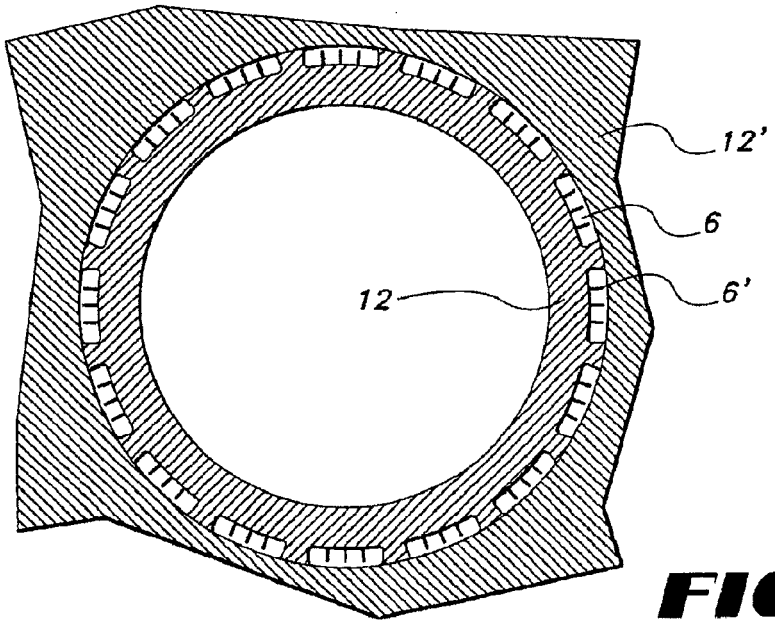


FIG 6

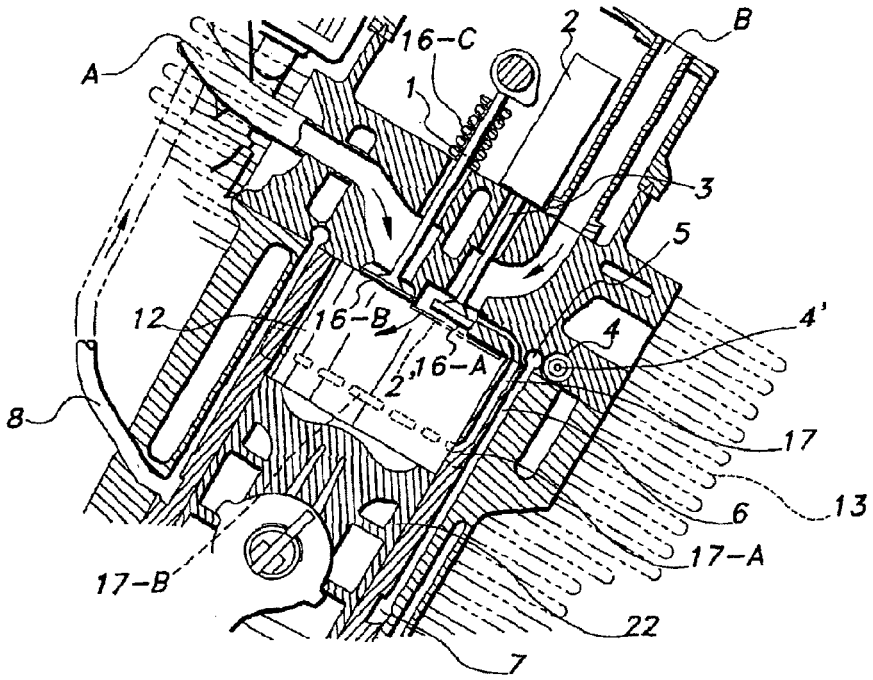
A
16-C
2
B
1
3
5
12
16-B
4'
4
16-A
2'
8
17
6
13
17-A
17-B
22
7

FIG 7

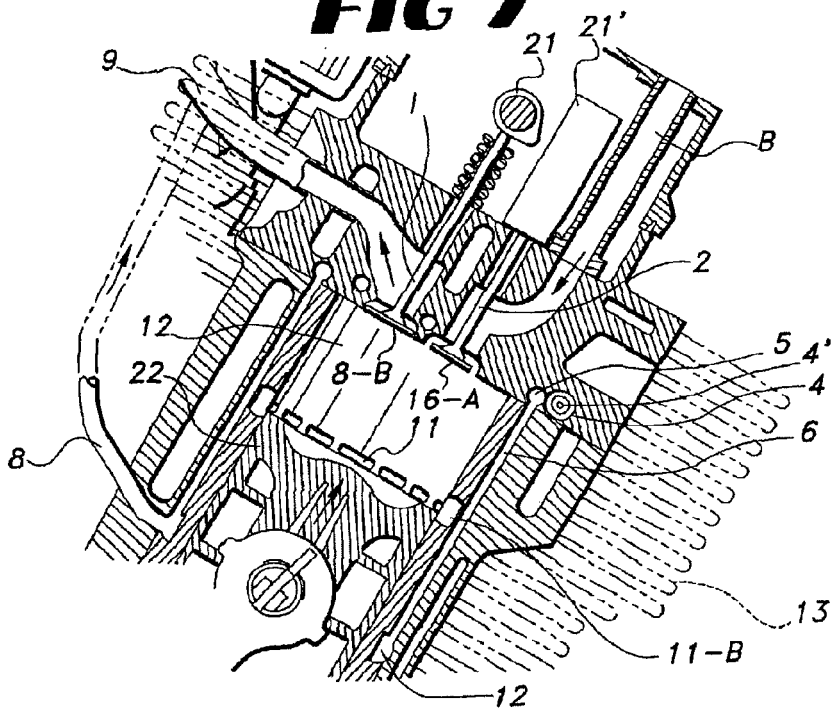
9
21
21'
1
B
2
12
5
4'
22
8-B
4
16-A
11
6
8
13
11-B
12

FIG 8

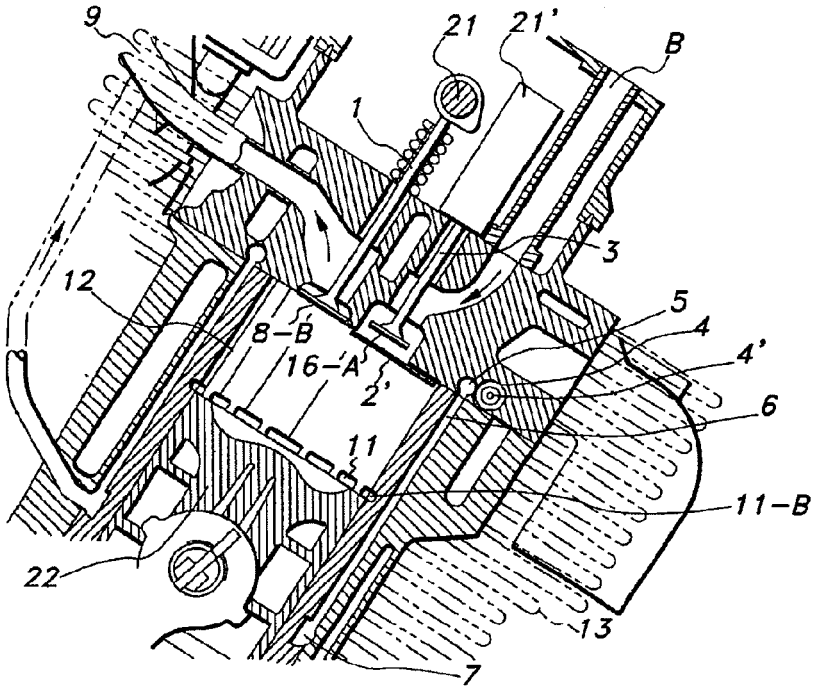
9
21
21'
B
1
3
12
5
4
4'
8-B
16-A'
2'
6
11
11-B
22
13
7

FIG 9

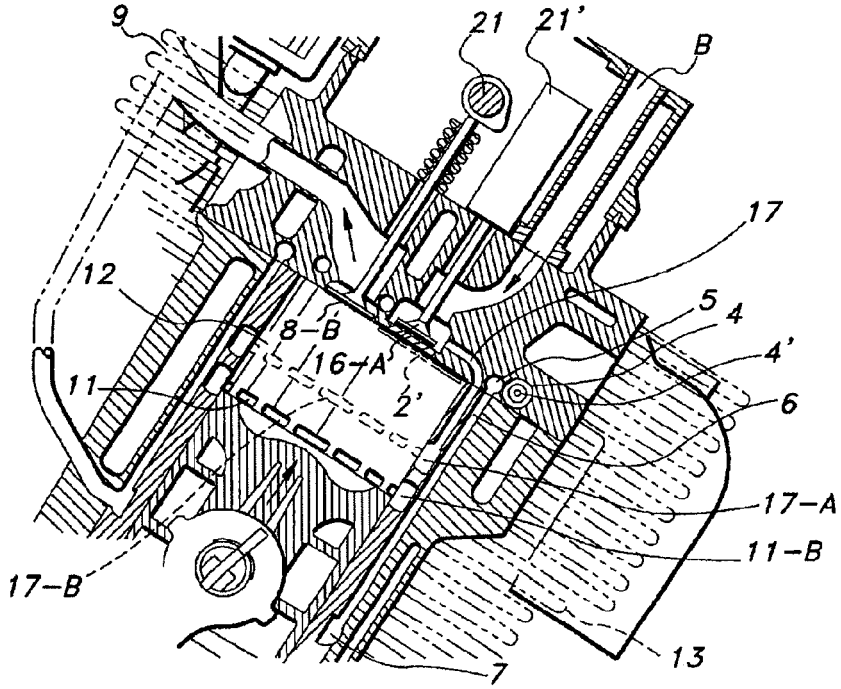
9
21
21'
B
17
12
5
4
4'
8-B
16-A'
11
2'
6
17-A
11-B
17-B
13
7

FIG 10

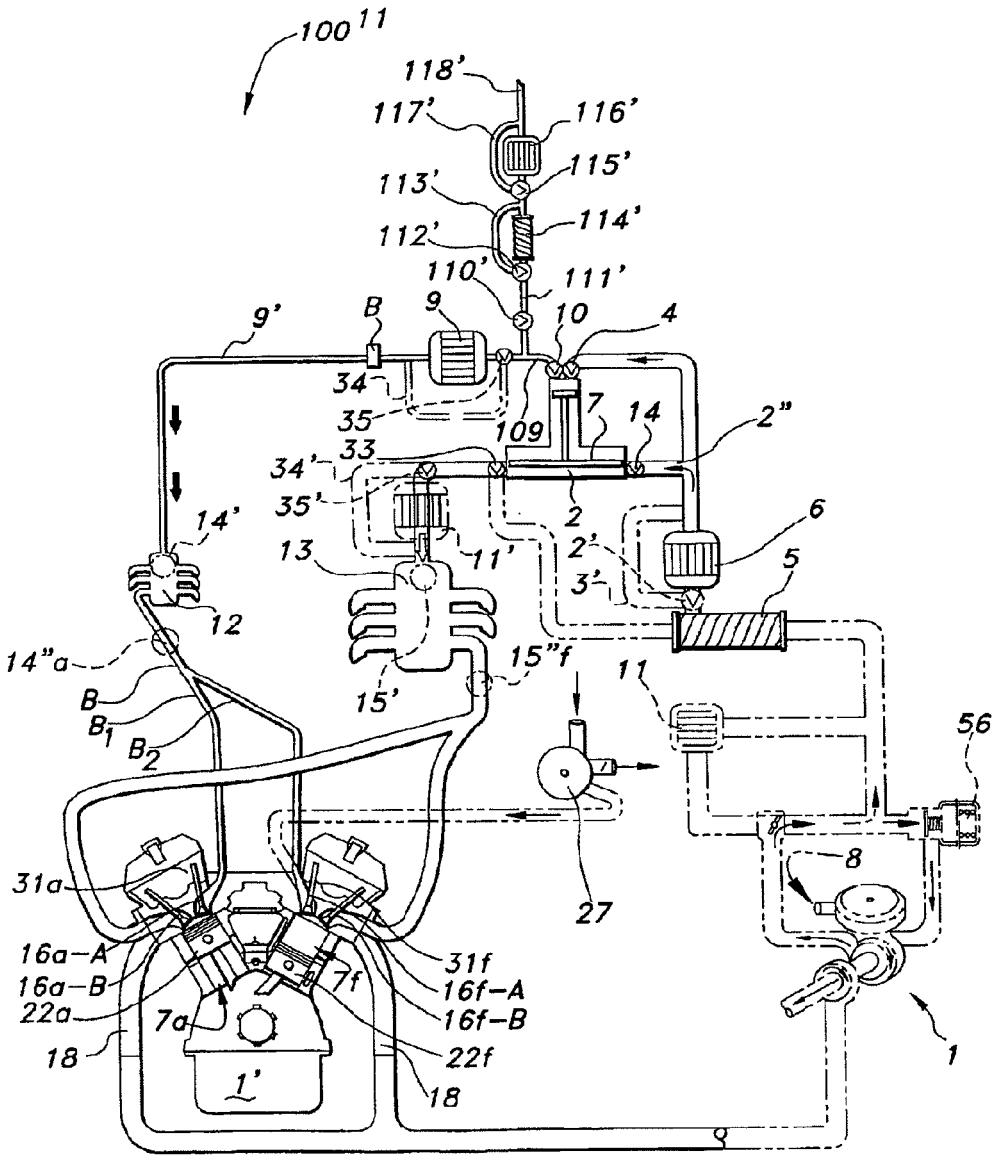
100
11
118'
117'
116'
115'
113'
114'
112'
110'
111'
9'
B
9
10
4
34
35
109
7
14
2"
33
34'
35'
2
2'
3'
6
5
14'
13
11'
12
14"a
B
B1
B2
15'
15"f
11
56
8
27
31a
16a-A
16a-B
22a
7a
18
1'
7f
31f
16f-A
16f-B
22f
18
1

FIG 11

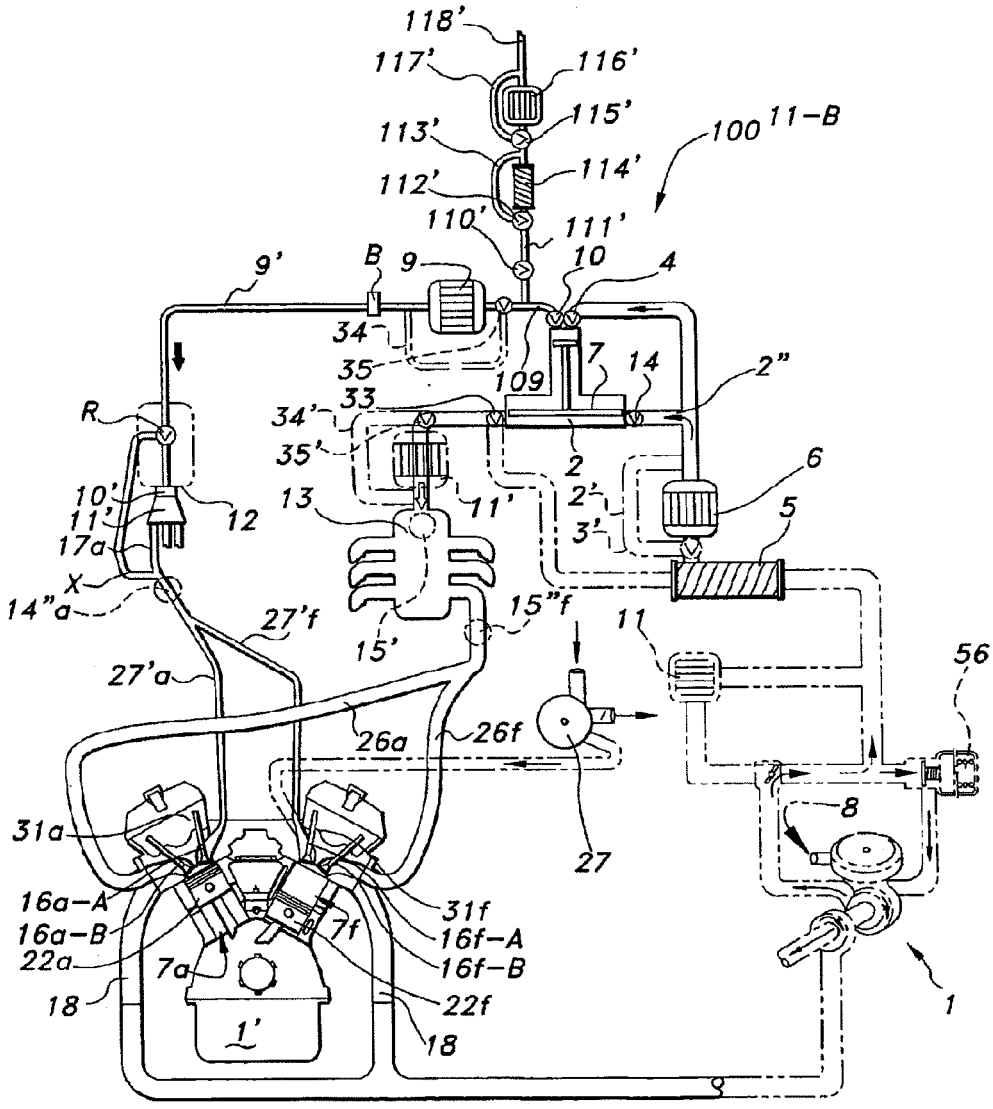
118'
117'
116'
115'
113'
100
11-B
114'
112'
110'
111'
9'
B
9
10
4
34
35
109
7
14
2"
R
34'
33
35'
2
6
10'
11'
17a
12
13
11'
2'
3'
5
X
14"a
27'f
15"f
15'
11
56
27'a
26a
26f
8
31a
27
16a-A
16a-B
22a
7a
31f
7f
16f-A
16f-B
22f
18
1'
18
1

FIG 11B

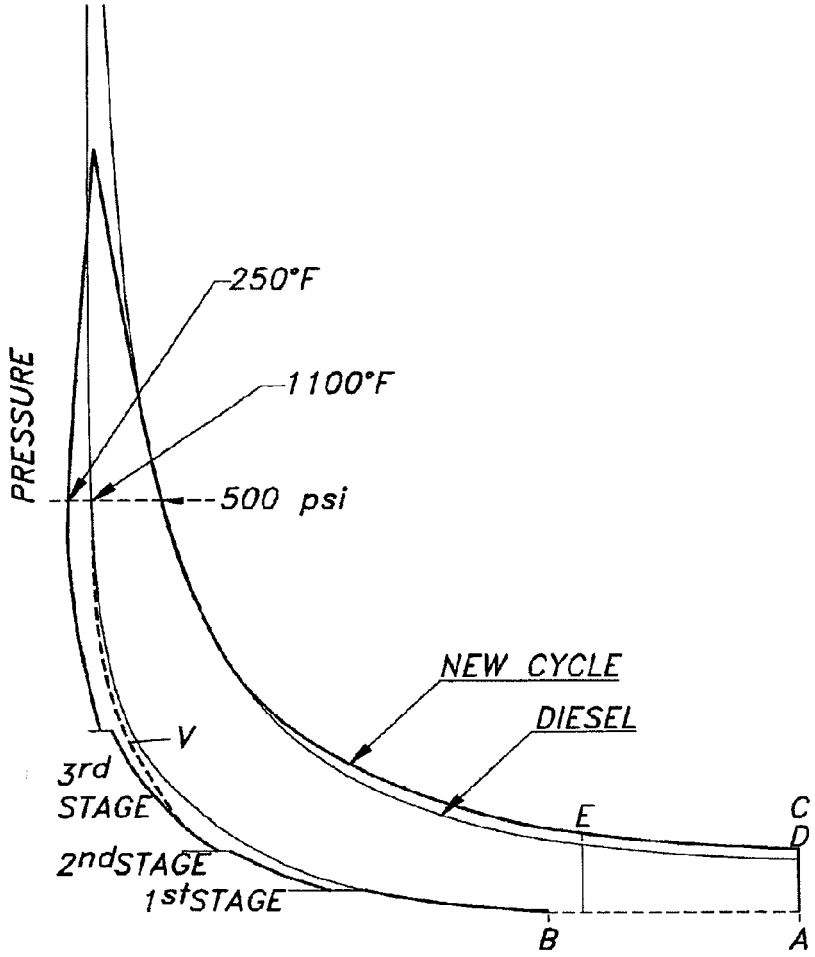


A – COMPRESSION BEGINS IN 2–STROKE AND 4–STROKE DIESEL CYCLE ENGINE
B – COMPRESSION BEGINS IN 2–STROKE AND 4–STROKE NEW CYCLE ENGINE
C – EXPANSION ENDS IN 4–STROKE DIESEL CYCLE ENGINE
D – EXPANSION ENDS IN 2–STROKE AND 4–STROKE NEW CYCLE ENGINE
E – EXPANSION ENDS (AT EXHAUST BLOW–DOWN) IN 2–STROKE DIESEL CYCLE ENGINE
V – SEE NOTE 1 IN DESCRIPTION

FIG 12

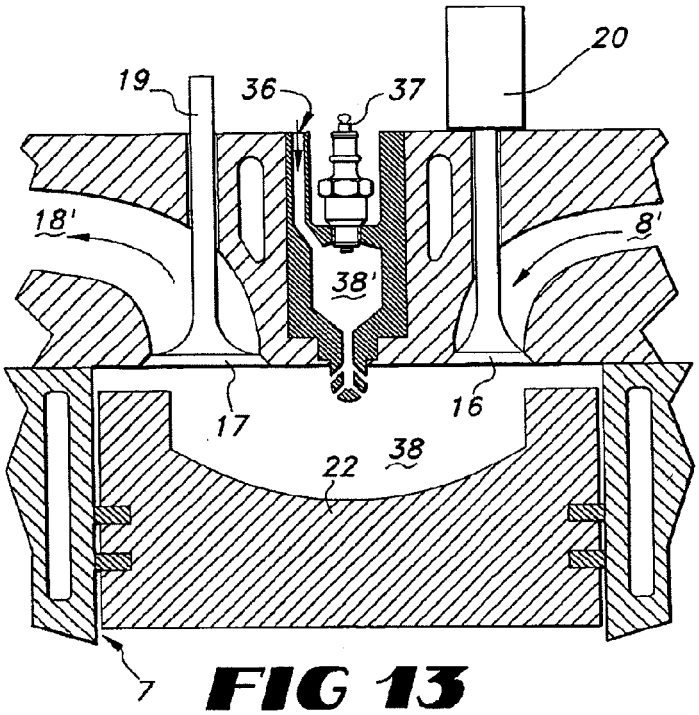


FIG 13

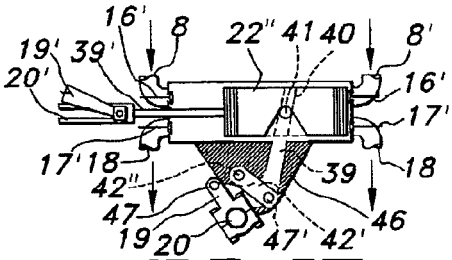


FIG 15

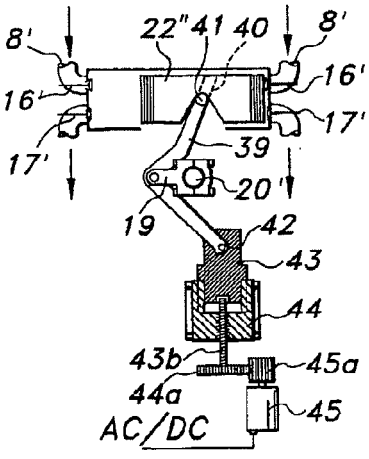


FIG 14

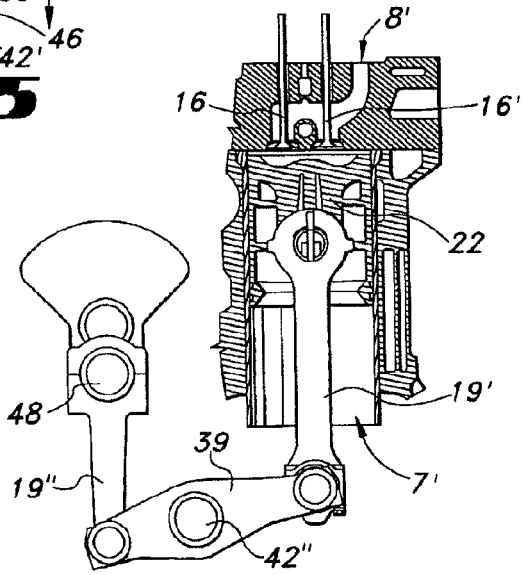


FIG 16

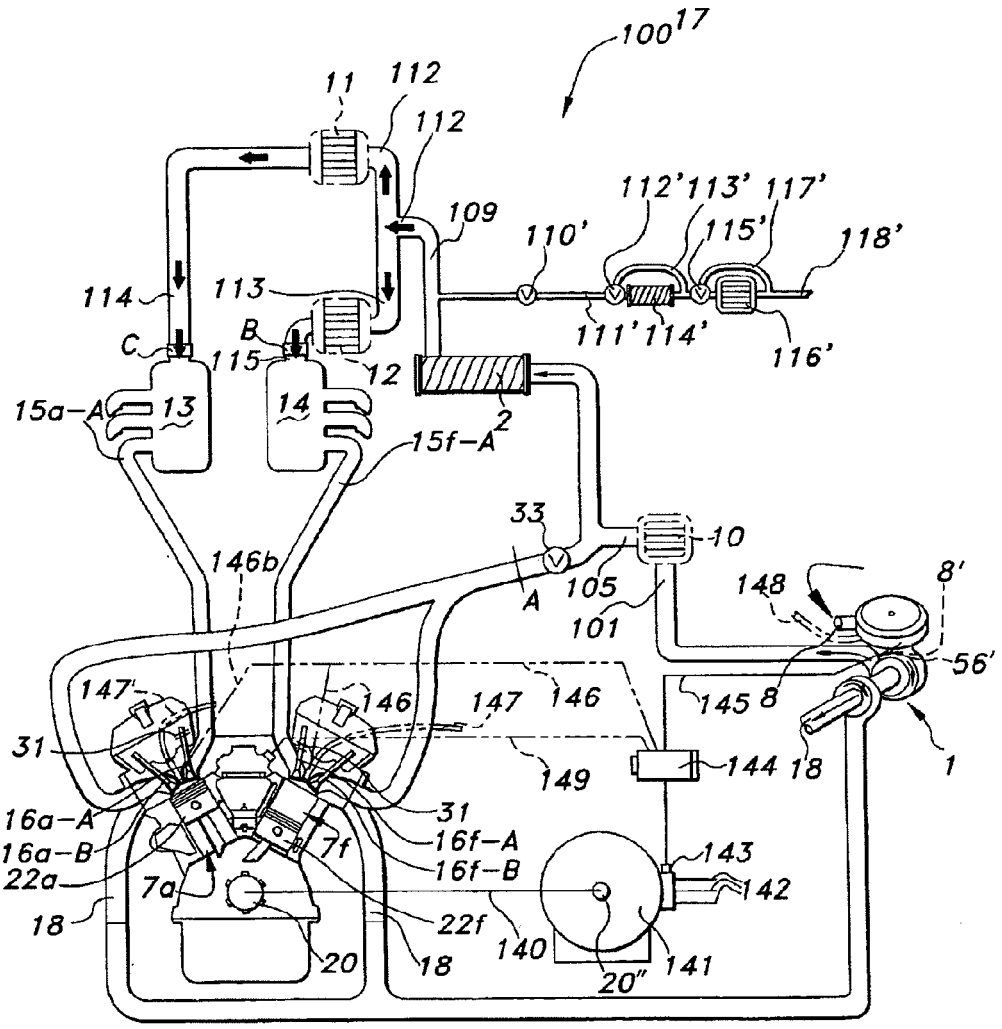
100
17
11
112
112
109
112'
113'
117'
115'
118'
110'
114
113
111'
114'
116'
C
B
115
12
2
15a–A
13
14
15f–A
33
10
146b
A
105
101
148
8'
56'
147'
146
147
146
145
8
31
149
144
18
1
16a–A
16a–B
22a
18
7a
7f
31
16f–A
16f–B
143
142
22f
140
141
20
18
20"

FIG 17

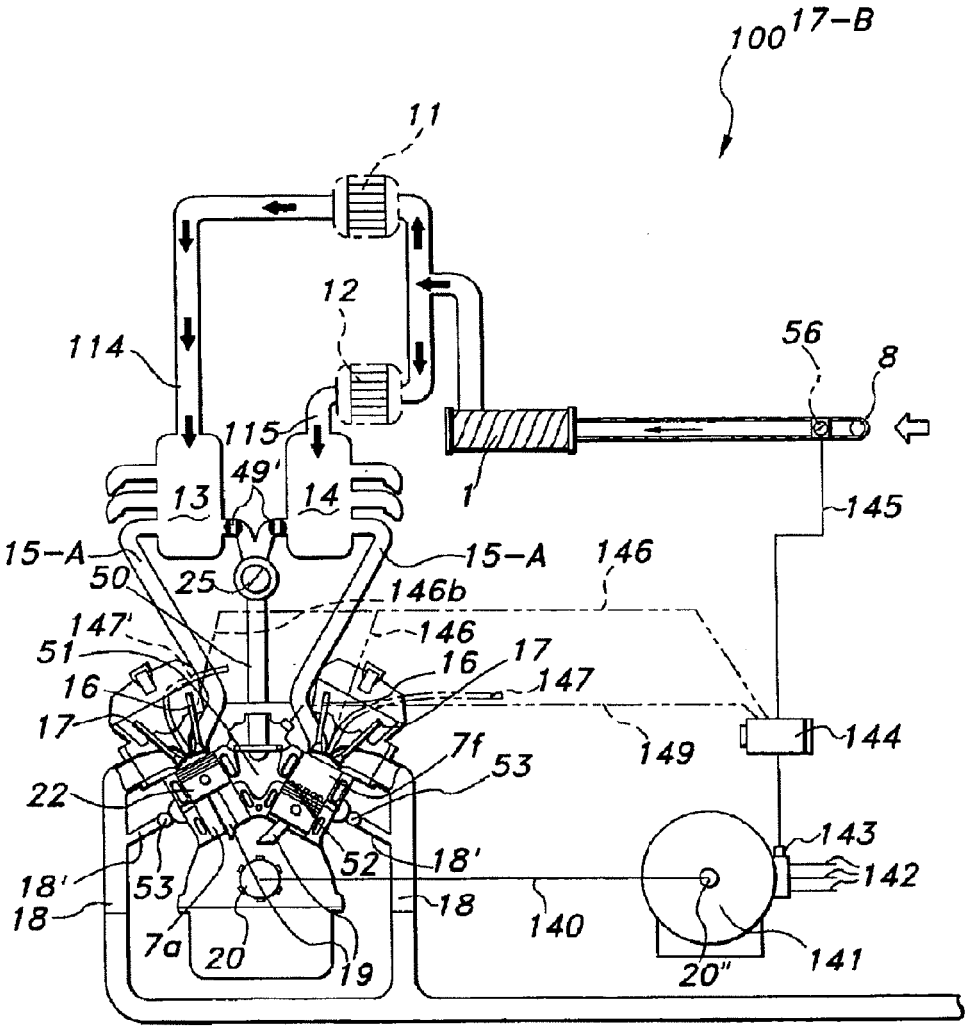
100
17-B
11
12
114
56
8
115
49'
13
14
1
145
15-A
50
25
15-A
146
146b
147'
51
146
16
17
147
16
17
149
144
7f
53
22
143
52
18'
18'
53
18
142
18
140
7a
20
19
20"
141

FIG 17B

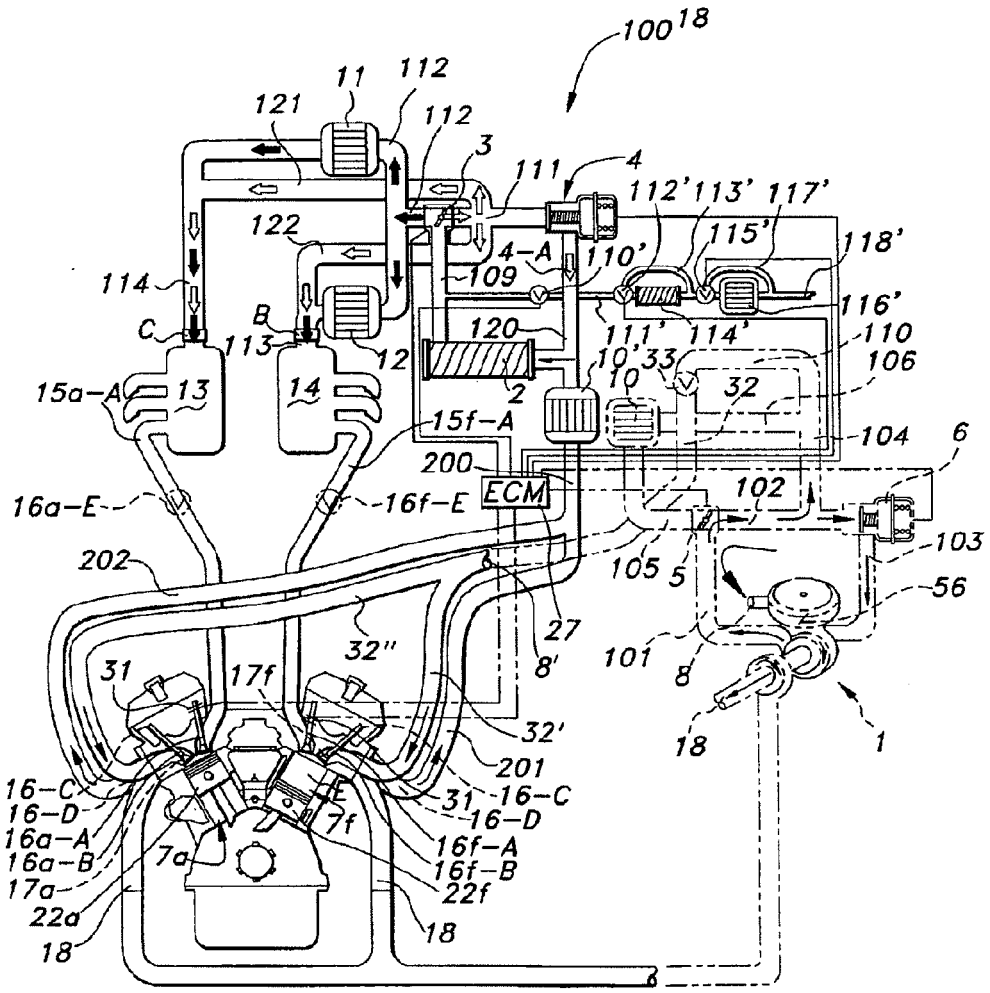
100
18
11
112
121
112
3
111
4
112'
113'
117'
115'
118'
122
4-A
110'
109
114
116'
C
B
113
12
120
111'
114'
110
10'
33
106
15a-A
13
14
2
10
32
15f-A
104
6
200
ECM
102
16a-E
16f-E
103
202
105
5
56
27
32"
8'
101
8
31
17f
32'
18
1
201
16-C
16-D
16a-A
16a-B
17a
22a
18
7a
7f
31
16-C
16-D
16f-A
16f-B
22f
18

FIG 18