E-FILED
Wednesday, 21 December, 2005 12:37:44 PM
Clerk, U.S. District Court, ILCD

Caterpillar Inc. v. Entec Engine Corporation and Clyde C. Bryant

CATERPILLAR INC.'S COMPLAINT FOR DECLARATORY RELIEF

EXHIBIT "B"
Part I

US006951211B2

(12) **United States Patent**
Bryant

(10) **Patent No.: US 6,951,211 B2**
(45) **Date of Patent: Oct. 4, 2005**

(54) **COLD AIR SUPER-CHARGED INTERNAL COMBUSTION ENGINE, WORKING CYCLE AND METHOD**

(76) Inventor: **Clyde C. Bryant**, 410 Trammell Dr., Alpharetta, GA (US) 30004

(*) Notice: Subject to any disclaimer, the term of this patent is extended or adjusted under 35 U.S.C. 154(b) by 0 days.

(21) Appl. No.: **10/385,588**

(22) Filed: **Mar. 11, 2003**

(65) **Prior Publication Data**

US 2004/0123849 A1 Jul. 1, 2004

Related U.S. Application Data

(63) Continuation-in-part of application No. 10/206,847, filed on Jul. 26, 2002, now abandoned, which is a continuation-in-part of application No. 09/632,739, filed on Aug. 4, 2000, which is a continuation of application No. 08/863,103, filed on May 23, 1997, now Pat. No. 6,279,550, which is a continuation-in-part of application No. 08/841,488, filed on Apr. 23, 1997, now abandoned, which is a continuation-in-part of application No. 09/757,772, filed on Jan. 9, 2001, now abandoned, said application No. 10/385,588, is a continuation-in-part of application No. 10/029,224, filed on Dec. 20, 2001, now abandoned.

(60) Provisional application No. 60/022,102, filed on Jul. 17, 1996, provisional application No. 60/023,460, filed on Aug. 6, 1996, provisional application No. 60/029,260, filed on Oct. 25, 1996, provisional application No. 60/040,630, filed on Mar. 7, 1997, provisional application No. 60/175,597, filed on Jan. 11, 2000, provisional application No. 60/259,727, filed on Jan. 4, 2001, provisional application No. 60/278,030, filed on Mar. 22, 2001, provisional application No. 60/284,711, filed on Apr. 18, 2001, provisional application No. 60/296,620, filed on Jun. 7, 2001, provisional application No. 60/297,663, filed on Jun. 12, 2001, provisional application No. 60/340,728, filed on Oct. 22, 2001, provisional application No. 60/340,609, filed on Dec. 14, 2001, and provisional application No. 60/374,392, filed on Apr. 22, 2002.

(51) **Int. Cl.**[7] **F02B 33/00**

(52) **U.S. Cl.** **123/559.1**; 123/316; 123/432

(58) **Field of Search** 123/559.1, 564, 123/316, 432, 213, 216

(56) **References Cited**

U.S. PATENT DOCUMENTS

1,562,692	A	11/1925	De Rochefort-Lucay	123/432
1,825,817	A	10/1931	Patterson	123/559.1
1,963,780	A	6/1934	Du Bois	60/605.1
2,202,227	A	5/1940	Noland	

(Continued)

FOREIGN PATENT DOCUMENTS

DE 29 30 124 A1 2/1981

(Continued)

OTHER PUBLICATIONS

Diesel Engine Reference Book—LCR Lilly—Butterworth & Co.—1984.

(Continued)

Primary Examiner—Michael Koczo, Jr.
(74) *Attorney, Agent, or Firm*—Womble Carlyle Sandridge & Rice PLLC

(57) **ABSTRACT**

Working cycle for internal combustion engines, with methods and apparatuses for managing combustion charge density, temperature, pressures and turbulence (among other characteristics). At least one embodiment describes a supercharged internal combustion engine in which a supercharging portion of air is compressed, cooled and injected late in the compression process. A sub-normal compression ratio or low "effective" compression ratio initial air charge is received by a cylinder/compression chamber on the engine intake process, which during compression produces only a fraction of heat-of-compression as that produced by a conventional engine. During compression process, dense, cooled supercharging air charge is injected, adding density and turbulence above that of conventional engines with low "effective" compression ratio for this portion of air charge also. Compression continues and near piston top dead center, the air charge being mixed with fuel is ignited for power pulse followed by scavenging.

28 Claims, 37 Drawing Sheets

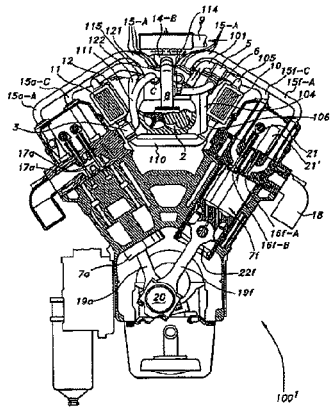

U.S. PATENT DOCUMENTS

2,292,233	A		8/1942	Lysholm 123/316
2,344,993	A		3/1944	Lysholm 123/105
2,391,176	A	*	12/1945	Mallory 123/432
2,453,377	A		11/1948	Lozivit 123/432
2,522,456	A		9/1950	Mallory 123/432
2,594,845	A		4/1952	Baumann 60/13
2,644,436	A		7/1953	Berlyn
2,670,595	A		3/1954	Miller 60/13
2,773,490	A		12/1956	Miller 123/316
3,015,934	A		1/1962	Miller 123/316
3,186,388	A		6/1965	Bricout 60/605.1
3,250,068	A		5/1966	Vulliamy
3,257,797	A		6/1966	Lieberherr
3,266,234	A		8/1966	Cook 60/605.1
3,405,692	A		10/1968	Hanns-Dieter
3,964,451	A		6/1976	Goto 123/432
4,020,809	A		5/1977	Kern et al.
4,033,304	A		7/1977	Luria
4,050,435	A		9/1977	Fuller, Jr. et al.
4,132,213	A		1/1979	Weaver
4,149,493	A		4/1979	Franke 123/432
4,161,166	A		7/1979	Roznovsky
4,180,035	A		12/1979	Saiki et al.
4,206,728	A		6/1980	Trenne
4,315,488	A		2/1982	Tadokoro et al.
4,344,289	A		8/1982	Curiel et al.
4,387,672	A		6/1983	Crocker
4,423,709	A		1/1984	Arrieta
4,424,790	A		1/1984	Curtil
4,474,008	A		10/1984	Sakurai et al.
4,520,774	A		6/1985	Sitter
4,527,534	A		7/1985	Sakurai et al. 123/432
4,554,890	A		11/1985	Okimoto et al. 123/432
4,561,253	A		12/1985	Curtil
4,565,167	A		1/1986	Bryant 123/70
4,566,422	A		1/1986	Tadokoro et al. 123/432
4,572,114	A		2/1986	Sickler
4,633,844	A		1/1987	Okimoto 123/432
4,643,049	A		2/1987	Nishikawa et al.
4,730,457	A		3/1988	Yamada et al. 60/609
4,759,188	A		7/1988	Schatz 60/605.1
4,815,423	A		3/1989	Holmer
4,833,971	A		5/1989	Kubik
4,841,936	A		6/1989	Takahashi
4,903,488	A		2/1990	Shibata 60/609
4,934,344	A		6/1990	Perr
4,959,961	A		10/1990	Hiereth 60/612
5,000,145	A		3/1991	Quenneville
5,012,778	A		5/1991	Pitzi
5,119,795	A		6/1992	Goto et al. 123/563
5,191,867	A		3/1993	Glassey
5,251,595	A		10/1993	Wei-Min
5,255,641	A		10/1993	Schechter
5,327,856	A		7/1994	Schroeder et al.
5,327,858	A		7/1994	Hausknecht
5,333,456	A		8/1994	Bollinger
5,335,633	A		8/1994	Thien
5,363,816	A		11/1994	Yorita et al.
5,379,743	A		1/1995	Stokes et al.
5,408,979	A		4/1995	Backlund et al.
5,445,128	A		8/1995	Letang et al.
5,456,222	A		10/1995	Schechter
5,479,890	A		1/1996	Hu et al.
5,515,818	A		5/1996	Born
5,520,161	A		5/1996	Klopp
5,546,914	A		8/1996	Scheinert
5,549,095	A		8/1996	Goto et al.
5,564,386	A		10/1996	Korte et al.
5,586,526	A		12/1996	Lindquist
5,586,531	A		12/1996	Vittorio
5,611,204	A		3/1997	Radovanovic et al.
5,615,646	A		4/1997	Feucht
5,619,965	A		4/1997	Cosma et al.
5,645,030	A		7/1997	Letsche
5,649,516	A		7/1997	Laveran 123/563
5,680,841	A		10/1997	Hu
5,682,854	A		11/1997	Ozawa
5,713,331	A		2/1998	Eisenbacher et al.
5,718,199	A		2/1998	Hu et al.
5,724,939	A		3/1998	Faletti et al.
5,732,678	A		3/1998	Lindquist et al.
5,778,674	A		7/1998	Kimura
5,787,859	A		8/1998	Meistrick et al.
5,809,964	A		9/1998	Meistrick et al.
5,813,231	A		9/1998	Faletti et al.
5,816,216	A		10/1998	Egashira et al.
5,829,397	A		11/1998	Vorih et al.
5,839,400	A		11/1998	Vattaneo et al.
5,839,453	A		11/1998	Hu
5,937,807	A		8/1999	Peters et al.
5,967,115	A		10/1999	Konopka et al.
5,970,929	A		10/1999	Tacquet
6,000,374	A		12/1999	Cosma et al.
6,003,316	A		12/1999	Baert et al.
6,006,706	A		12/1999	Kanzaki
6,012,424	A		1/2000	Meistrick
6,020,651	A		2/2000	Nakamura et al.
6,026,786	A		2/2000	Groff et al.
6,035,639	A		3/2000	Kolmanovsky et al.
6,035,640	A		3/2000	Kolmanovsky et al.
6,067,800	A		5/2000	Kolmanovsky et al.
6,067,946	A		5/2000	Bunker et al.
6,076,353	A		6/2000	Freudenberg et al.
6,082,328	A		7/2000	Meistrick et al.
6,095,127	A		8/2000	Kolmanovsky et al.
6,101,998	A		8/2000	Tamura et al.
6,128,902	A		10/2000	Kolmanovsky et al.
6,135,073	A		10/2000	Feucht et al.
6,148,778	A		11/2000	Sturman
6,170,441	B1		1/2001	Haldeman et al.
6,178,749	B1		1/2001	Kolmanovsky et al.
6,189,504	B1		2/2001	Israel et al.
6,209,516	B1		4/2001	Yamashita
6,223,846	B1		5/2001	Schechter
6,234,123	B1		5/2001	Iiyama et al.
6,237,551	B1		5/2001	Macor et al.
6,244,257	B1		6/2001	Hu
6,267,107	B1		7/2001	Ward
6,273,076	B1		8/2001	Beck et al.
6,279,550	B1		8/2001	Bryant
6,301,887	B1		10/2001	Gorel et al.
6,301,889	B1		10/2001	Gladden et al.
6,302,076	B1		10/2001	Bredy
6,439,195	B1		8/2002	Warner
6,467,452	B1		10/2002	Duffy et al.
6,571,765	B2		6/2003	Kuboshima et al.
6,575,129	B2		6/2003	Almkvist et al.
6,651,618	B1		11/2003	Coleman et al. 123/305
6,688,280	B2		2/2004	Weber et al. 123/305
6,722,349	B2		4/2004	Leman et al.
6,732,685	B2		5/2004	Leman
2001/0002379	A1		5/2001	Schechter
2001/0023671	A1		9/2001	Vorih
2002/0157623	A1		10/2002	Turner et al.
2003/0145810	A1		8/2003	Leman et al.
2004/0020204	A1		2/2004	Callas et al. 60/612
2004/0118118	A1		6/2004	Weber et al.
2004/0206331	A1		10/2004	Leman

FOREIGN PATENT DOCUMENTS

DE	31 24668	A1	1/1983

DE	39 03 474	A1	2/1988
DE	39 03 474	A1	9/1989
DE	FR 43 08 354	A1	9/1993
DE	44 40 289	A1	5/1996
DE	44 43 169	A1	6/1996
EP	0 275 244		1/1988
EP	0 961 018	A1	12/1999
EP	1 022 446	A1	7/2000
FR	2 583 108	A2	12/1986
GB	1331348		9/1973
JP	355153820	A	12/1982
JP	58-62314	*	4/1983
JP	358062314	A	4/1983
JP	58-180 722		10/1983
JP	58-211 526		12/1983
JP	59 060034	A	4/1984
JP	359188031	A	10/1984
JP	60090926		5/1985
JP	61070130		4/1986
JP	63055324		3/1988
JP	363057822	A	3/1988
JP	63198728		8/1988
JP	363268926	A	11/1988
JP	363268927	A	11/1988
JP	1024414		1/1989
JP	401083820	A	3/1989
JP	05106415	A2	4/1993
JP	200120457		4/2000
JP	2000 120457		4/2000
JP	2000-145484		5/2000
JP	2000145484		5/2000
JP	2003262137	A	9/2003
SU	248375		7/1969
SU	1247573		7/1986
WO	WO 90/15917		12/1990
WO	WO 98/02653		1/1998
WO	WO 01/20150		3/2001
WO	WO 01/46574		6/2001

OTHER PUBLICATIONS

SAE Technical Paper Series—A Review & Classification of Variable Valve Timing Mechanisms—Dresner et al.—Feb. 27, 1989–Mar. 3, 1989—pp. 1–14.

SAE Technical Paper Series—A Review of Variable Valve Timing Benefits & Modes of Operation—Dresner et al.—Aug. 7, 1989–Aug. 10, 1989—pp. 1–9.

Jacobs Vehicle Systems, VVA—Variable Actuation Systems—pp. 1–2.

Paxman Diesel Engines since 1934, pp. 1 and 9, Aug. 23, 2004.

ALSTOM Engines Paxman VP185—pp. 1–6.

The 8th Annual Automobile & Engine Technology Colloquium in Aachen—An Overview—Dipl.-Ing. Jörg Ballauf—pp. 1–5, Oct., 1999.

Sturman Industries—Hydraulic Valve Actuation—Sep. 5, 2004.

The Internal–Combustion Engine in Theory & Practice—vol. 1: Thermodynamics, Fluid Flow, Performance—Second Edition, Revised—Charles Fayette Taylor—1985.

The Internal–Combustion Engine in Theory & Practice—vol. 2: Combustion, Fuels, Materials, Design—Revised Edition—Charles Fayette Taylor—1985.

http://www.mazda.com.au/corpora/209.html, Oct. 16, 2001, p. 1–6.

Challen et al., "Diesel Engine Reference Book, Second Edition," SAE International, 1999, pp. 75, 81, 84, 146, and 263–305.

Edwards et al, "The Potential of a Combined Miller Cycle & Internal EGR Engine for Future Heavy Duty Truck Apps" SAE Int'l Congress & Expo, Feb. 23–Feb. 26, 1998.

Yorihiro Fukuzawa et al., "Development of High Efficiency Miller Cycle Gas Engine", Mitsubishi Heavy Industries, Ltd., Technical Review, vol. 38, No. 3, Oct. 2001, pp. 146–150.

Pending U.S. Appl. No. 10/992,198; Title: Combustion Engine Including Fluidically–Driven Engine Valve Actuator—Filing Date: Nov. 19, 2004.

Pending U.S. App. No. 10/992,137: Title: Combustion Engine Including Fluidically–Controlled Engine Valve Actuator—Filing Date: Nov. 19, 2004.

Pending U.S. Appl. No. 10/933,300; Title: Air & Fuel Supply System for Combustion Engine—Filing Date: Nov. 19, 2004.

Pending U.S. Appl. No. 10/992,074: Title: Combustion Engine Including Cam Phase–Shifting—Filing Date: Nov. 19, 2004.

Pending U.S. Appl. No. 10/992,866: Title: Air & Fuel Supply System for Combustion Engine With Particulate Trap—Filing Date: Nov. 19, 2004.

Pending U.S. Appl. No. 10/992,857: Title: Air & Fuel Supply System for Combustion Engine Operating at Optimum Engine Speed—Filing Date: Nov. 19, 2004.

Pending U.S. Appl. No. 10/992,897: Title: Air & Fuel Supply System for Combustion Engine—Filing Date: Nov. 19, 2004.

Pending U.S. Appl. No. 10/933,065; Title: Air & Fuel Supply System for Combustion Engine Operating in HCCI Mode—Filing Date: Nov. 19, 2004.

Pending U.S. Appl. No. 10/992,070: Title: Combustion Engine Including Exhaust Purification with On–Board Ammonia Production—Filing Date Nov. 19, 2004.

Pending U.S. Appl. No. 10/992,071; Title: Combustion Engine Including Engine Valve Actuation System—Filing Date Nov. 19, 2004.

Pending U.S. Appl. No. 10/992,069; Title: Air & Fuel Supply System for Combustion Engine—Filing Date Nov. 19, 2004.

Pending U.S. Appl. No. 10/992,125; Title: Air & Fuel Supply System for A Combustion Engine—Filing Date Nov. 19, 2004.

NOX Control in Heavy–Duty Diesel Engines—What is the Limit?—Dickey, Ryan III & Matheaus—International Congress & Exposition—Feb. 23–26, 1998—pp. 1–14.

http://www.mazda.com.au/corpora/209.html, Oct. 16, 2001, pp. 1–6.

Yorihiro Fukuzawa et al., "Development of High Efficiency Miller Cycle Gas Engine", Mitsubishi Heavy Industries, Ltd., Technical Review, vol. 38, No. 3, Oct., 2001, pp. 146–150.

* cited by examiner

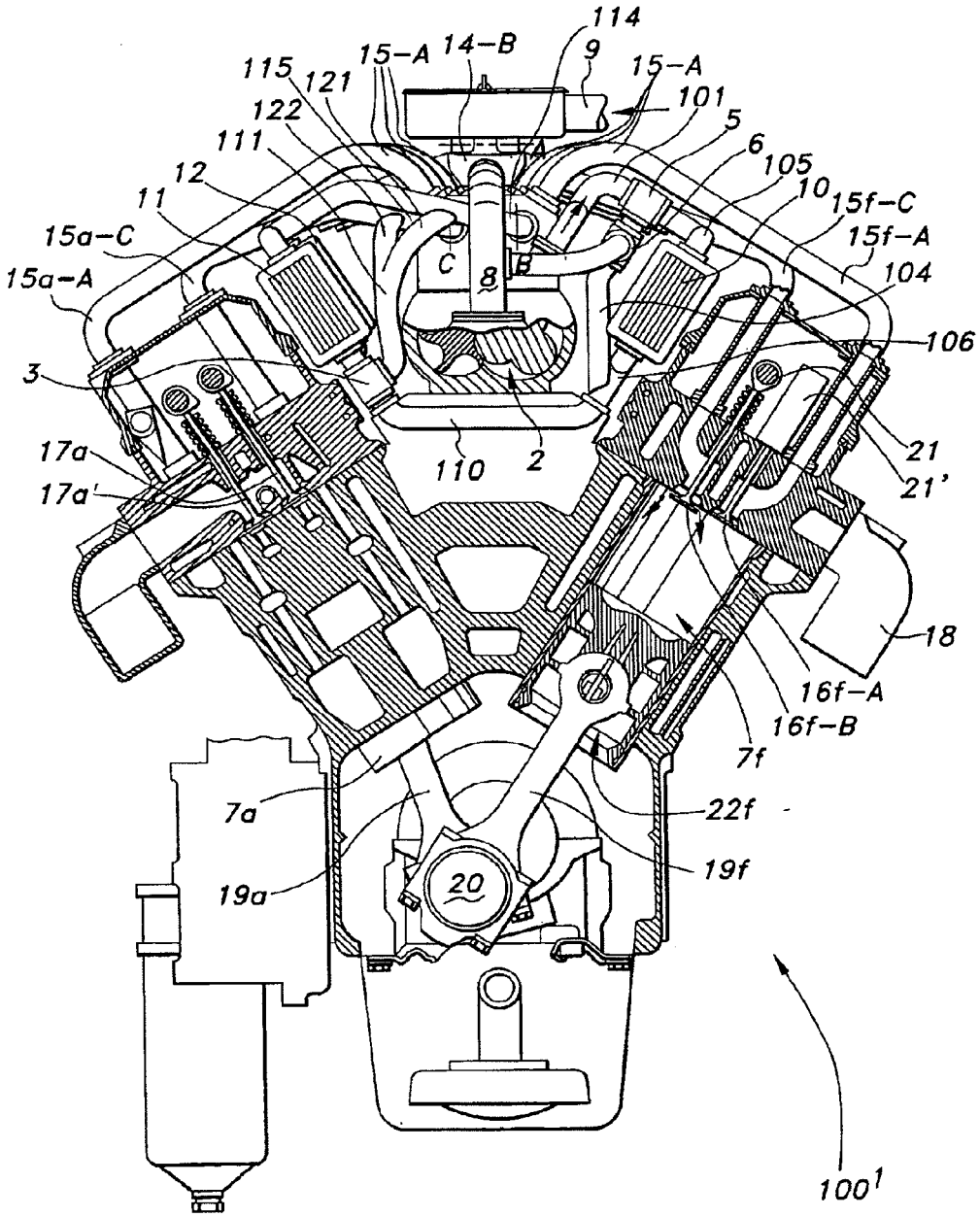
114
9
15-A
14-B
15-A
115
121
122
111
101
5
6
105
10
12
11
15f-C
15a-C
15f-A
15a-A
104
C
8
B
106
3
21
21'
17a
17a'
110
2
18
16f-A
16f-B
7f
7a
22f
19f
19a
20
100'

FIG 1

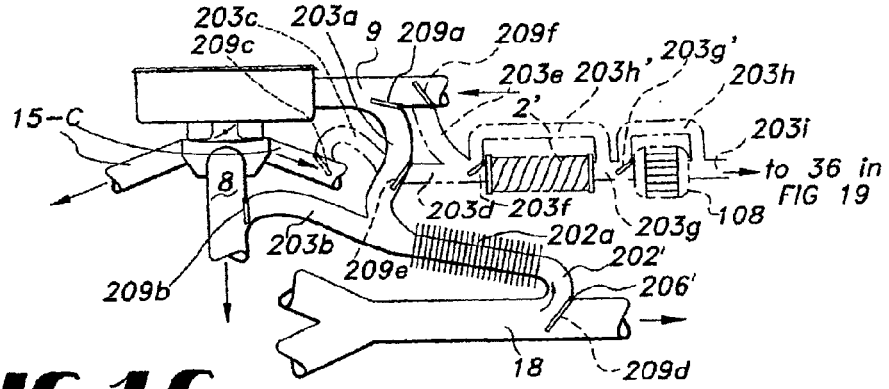
203c
203a
9
209a
209f
209c
203e
203h'
203g'
203h
2'
15-C
203i
to 36 in FIG 19
8
203d
203f
108
203g
202a
203b
202'
209e
209b
206'
18
209d

FIG 1C

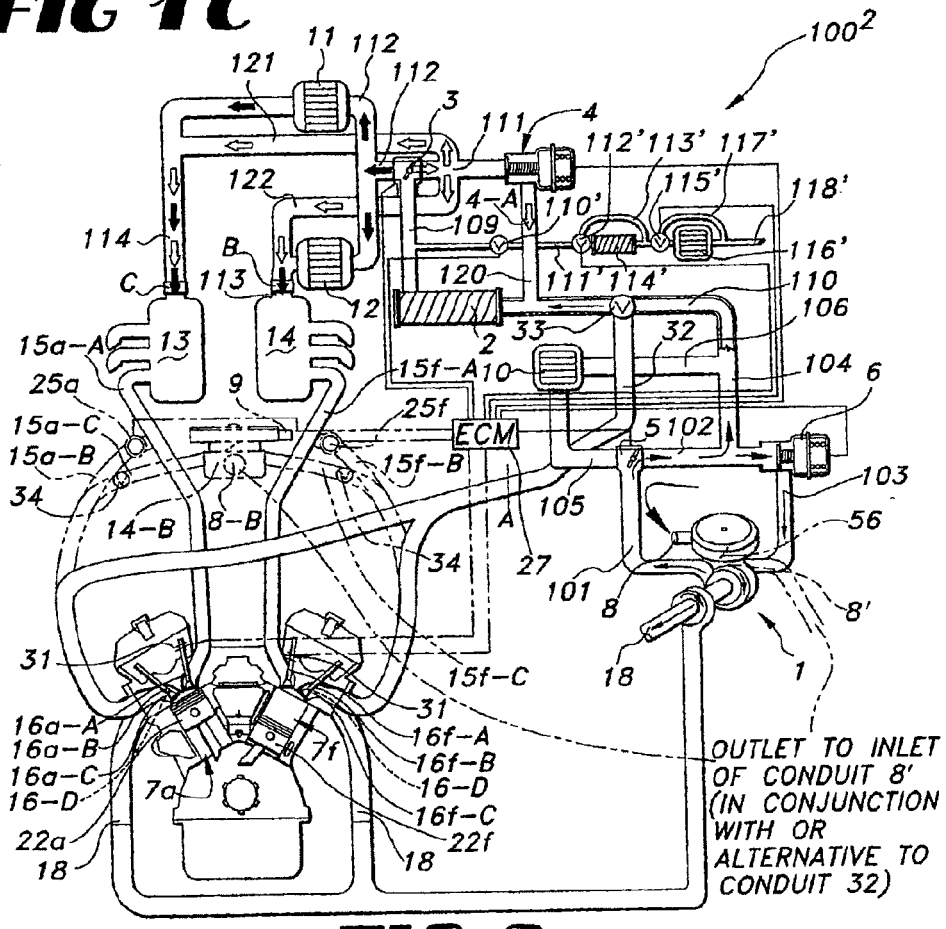
100
2
11
112
121
112
3
111
4
112'
113'
117'
122
115'
118'
4-A
110'
109
114
B
116'
C
113
120
111'
114'
110
12
106
2
33
32
15a-A
13
14
15f-A
10
104
6
25a
9
25f
ECM
5102
15a-C
15a-B
15f-B
103
34
14-B
8-B
A
105
56
34
27
101
8
8'
31
15f-C
18
1
31
16a-A
16f-A
16a-B
16f-B
16a-C
16-D
7f
7a
16-D
16f-C
22a
22f
18
18
OUTLET TO INLET OF CONDUIT 8' (IN CONJUNCTION WITH OR ALTERNATIVE TO CONDUIT 32)

FIG 2

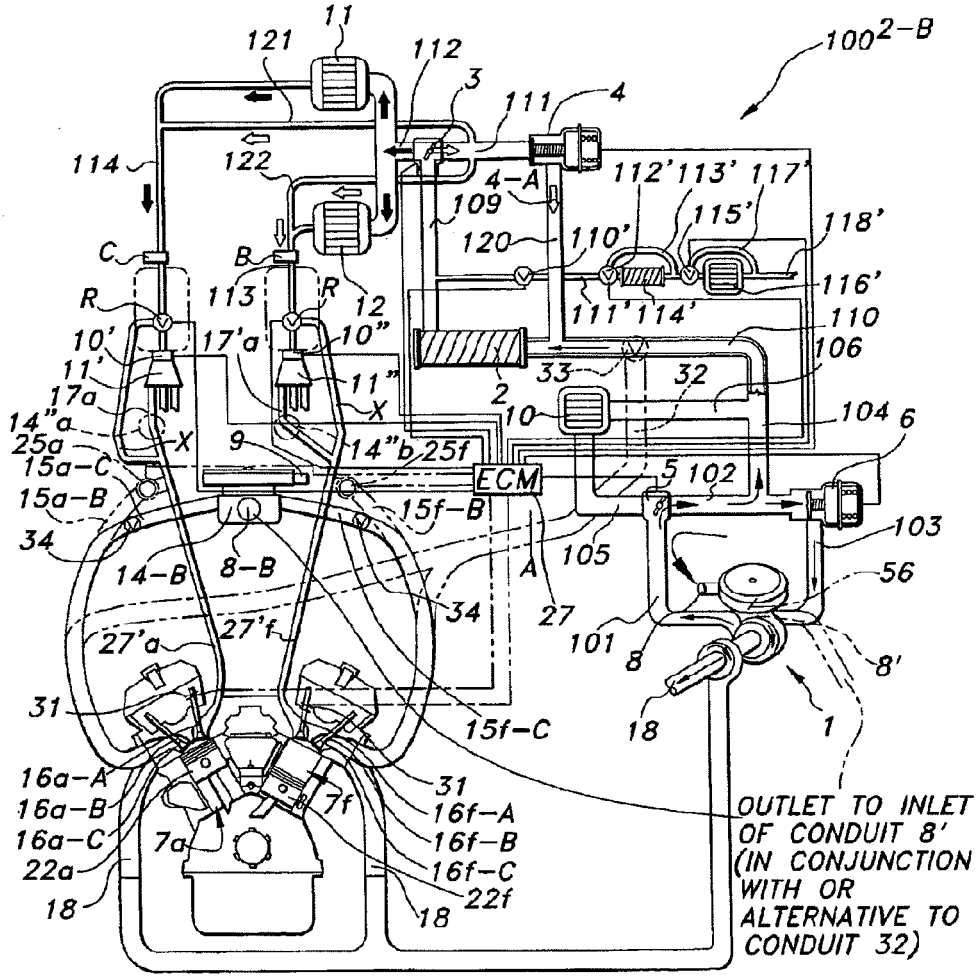

100 2-B
11
121
112
3
111
4
114
122
4-A
109
112' 113' 117'
115'
118'
120
110'
116'
C
B
113
R
12
111' 114'
110
10'
17'a
10"
106
11'
11"
33
32
17a
X
2
10
104
6
14"a
25a
9
14"b
25f
15a-C
ECM
5
102
15a-B
15f-B
103
34
14-B
8-B
105
A
56
34
27
27'a
27'f
101
8
8'
31
15f-C
18
1
16a-A
31
16a-B
7f
16f-A
16a-C
7a
16f-B
22a
16f-C
22f
18
18
OUTLET TO INLET OF CONDUIT 8' (IN CONJUNCTION WITH OR ALTERNATIVE TO CONDUIT 32)

FIG 2B

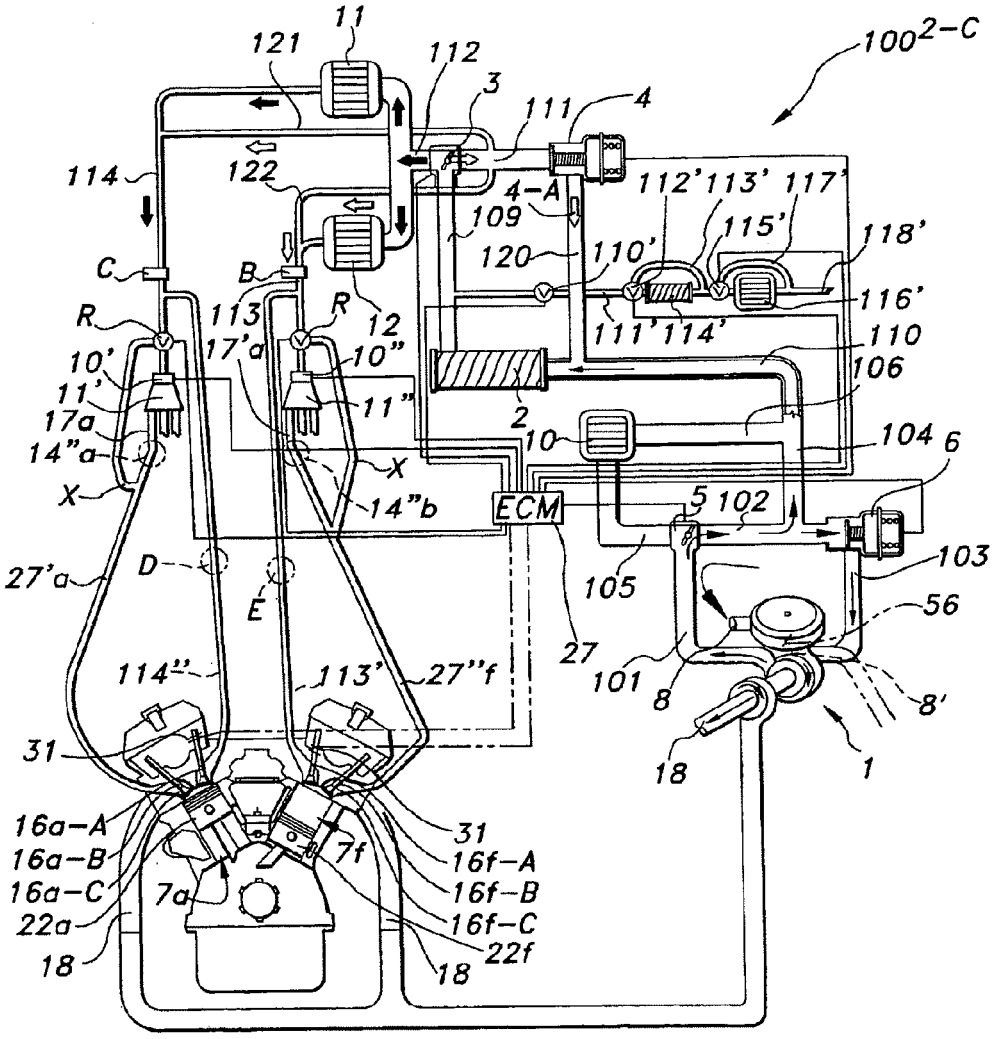
11
121
112
3
111
4
100 2-C
114
122
4-A
112' 113' 117'
109
115'
118'
120
110'
C
B
116'
R
113
R
12
111' 114'
110
17'a
10"
106
10'
11'
11"
2
17a
14"a
10
104
6
X
X
14"b
ECM
5 102
27'a
D
E
105
103
56
27
101
114"
113'
27"f
8
8'
31
18
1
16a-A
16a-B
16a-C
22a
18
7a
7f
31
16f-A
16f-B
16f-C
22f
18

FIG 2C

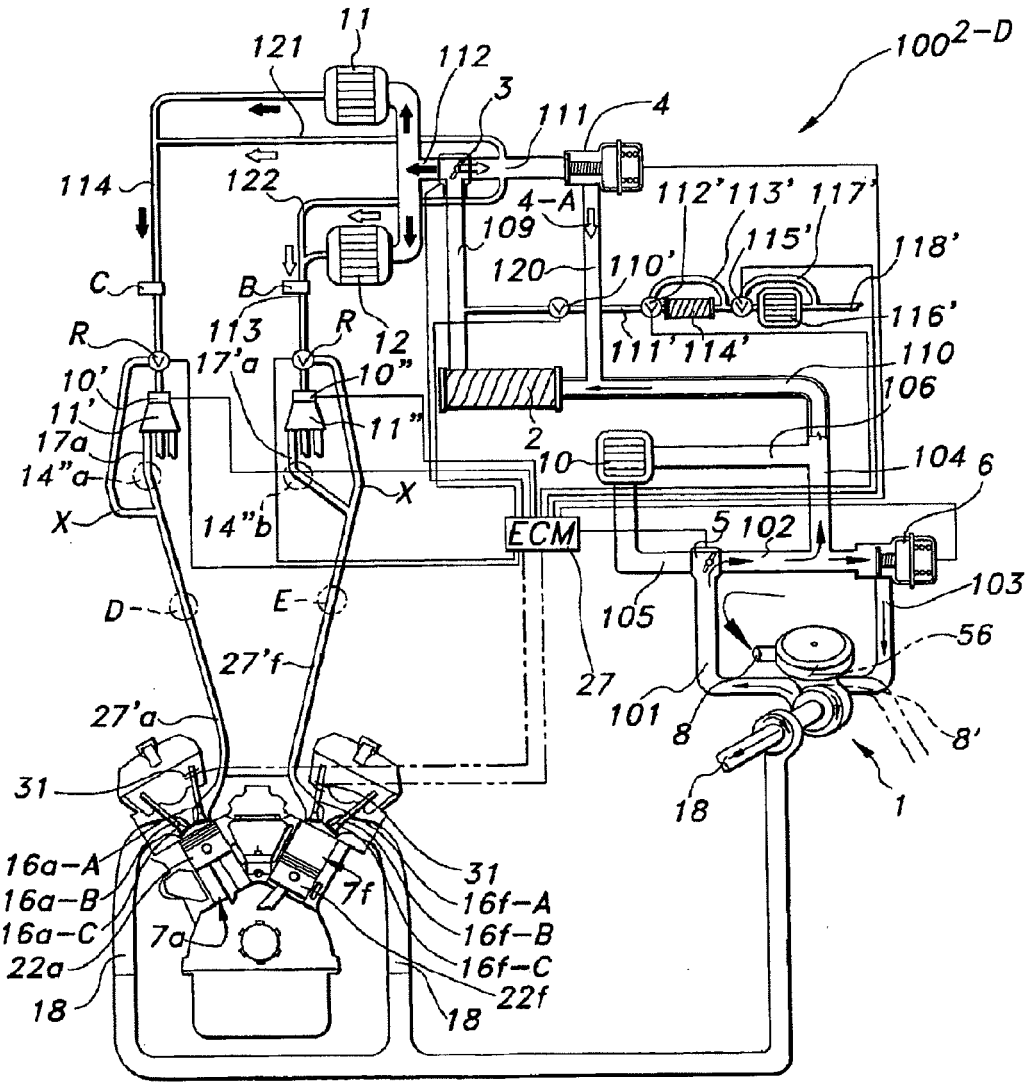
11
121
112
3
111
4
100
2-D
114
122
4-A
112'
113'
117'
109
115'
118'
120
110'
C
B
116'
R
113
R
12
111'
114'
110
17'a
10"
10'
106
11'
11"
2
17a
10
104
6
14"a
X
X
14"b
ECM
5
102
103
D
E
105
56
27'f
27
27'a
101
8
8'
31
18
1
16a-A
31
16a-B
7f
16f-A
16a-C
7a
16f-B
22a
16f-C
22f
18
18

FIG 2D

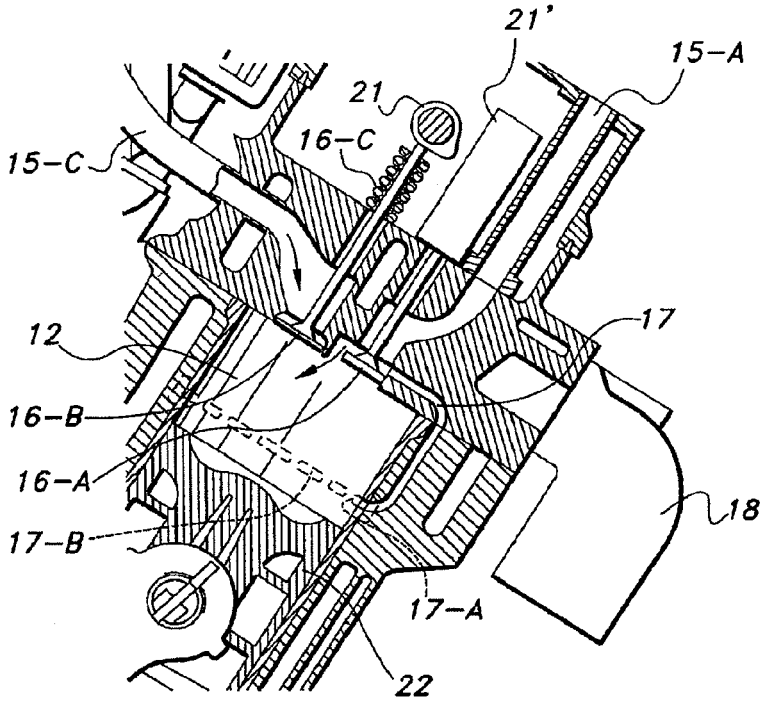
21'
15-A
21
16-C
15-C
12
17
16-B
16-A
18
17-B
17-A
22

FIG 3

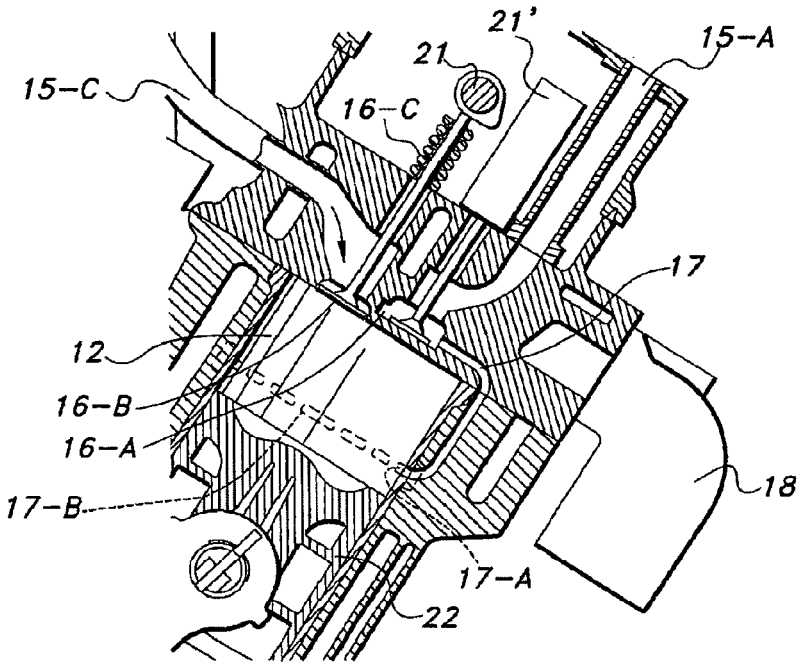
21'
15-A
21
15-C
16-C
17
12
16-B
16-A
18
17-B
17-A
22

FIG 4