JS 44 (Rev. 12/12)

CIVIL COVER SHEET

The JS 44 civil cover sheet and the information contained herein neither replace nor supplement the filing and service of pleadings or other papers as required by law, except as provided by local rules of court. This form, approved by the Judicial Conference of the United States in September 1974, is required for the use of the Clerk of Court for the purpose of initiating the civil docket sheet. *(SEE INSTRUCTIONS ON NEXT PAGE OF THIS FORM.)*

I. (a) PLAINTIFFS
LogoPaint A/S
Tysklandsvej 6
DK-7100 Vejle, Denmark

(b) County of Residence of First Listed Plaintiff _____
(EXCEPT IN U.S. PLAINTIFF CASES)

(c) Attorneys *(Firm Name, Address, and Telephone Number)*
Frederick A. Tecce, Panitch Schwarze Belisario & Nadel LLP
2005 Market Street, Suite 2200, Philadelphia, PA 19103
215-965-1294

DEFENDANTS
3D Sport Signs Sl; Carsten Jensen Charmig; Xavier Palmerola Fernandez; Jose Isabal Roca; and Traffic Sports USA, Inc.
501 Brickell Key Drive, Suite 407, Miami, Florida 33131

County of Residence of First Listed Defendant _____
(IN U.S. PLAINTIFF CASES ONLY)

NOTE: IN LAND CONDEMNATION CASES, USE THE LOCATION OF THE TRACT OF LAND INVOLVED.

Attorneys *(If Known)*

II. BASIS OF JURISDICTION *(Place an "X" in One Box Only)*

- ☐ 1 U.S. Government Plaintiff
- ☒ 3 Federal Question *(U.S. Government Not a Party)*
- ☐ 2 U.S. Government Defendant
- ☐ 4 Diversity *(Indicate Citizenship of Parties in Item III)*

III. CITIZENSHIP OF PRINCIPAL PARTIES *(Place an "X" in One Box for Plaintiff and One Box for Defendant)*
(For Diversity Cases Only)

	PTF	DEF		PTF	DEF
Citizen of This State	☐ 1	☐ 1	Incorporated *or* Principal Place of Business In This State	☐ 4	☐ 4
Citizen of Another State	☐ 2	☐ 2	Incorporated *and* Principal Place of Business In Another State	☐ 5	☒ 5
Citizen or Subject of a Foreign Country	☐ 3	☐ 3	Foreign Nation	☒ 6	☐ 6

IV. NATURE OF SUIT *(Place an "X" in One Box Only)*

CONTRACT
- ☐ 110 Insurance
- ☐ 120 Marine
- ☐ 130 Miller Act
- ☐ 140 Negotiable Instrument
- ☐ 150 Recovery of Overpayment & Enforcement of Judgment
- ☐ 151 Medicare Act
- ☐ 152 Recovery of Defaulted Student Loans (Excludes Veterans)
- ☐ 153 Recovery of Overpayment of Veteran's Benefits
- ☐ 160 Stockholders' Suits
- ☐ 190 Other Contract
- ☐ 195 Contract Product Liability
- ☐ 196 Franchise

REAL PROPERTY
- ☐ 210 Land Condemnation
- ☐ 220 Foreclosure
- ☐ 230 Rent Lease & Ejectment
- ☐ 240 Torts to Land
- ☐ 245 Tort Product Liability
- ☐ 290 All Other Real Property

TORTS

PERSONAL INJURY
- ☐ 310 Airplane
- ☐ 315 Airplane Product Liability
- ☐ 320 Assault, Libel & Slander
- ☐ 330 Federal Employers' Liability
- ☐ 340 Marine
- ☐ 345 Marine Product Liability
- ☐ 350 Motor Vehicle
- ☐ 355 Motor Vehicle Product Liability
- ☐ 360 Other Personal Injury
- ☐ 362 Personal Injury - Medical Malpractice

PERSONAL INJURY
- ☐ 365 Personal Injury - Product Liability
- ☐ 367 Health Care/ Pharmaceutical Personal Injury Product Liability
- ☐ 368 Asbestos Personal Injury Product Liability

PERSONAL PROPERTY
- ☐ 370 Other Fraud
- ☐ 371 Truth in Lending
- ☐ 380 Other Personal Property Damage
- ☐ 385 Property Damage Product Liability

CIVIL RIGHTS
- ☐ 440 Other Civil Rights
- ☐ 441 Voting
- ☐ 442 Employment
- ☐ 443 Housing/ Accommodations
- ☐ 445 Amer. w/Disabilities - Employment
- ☐ 446 Amer. w/Disabilities - Other
- ☐ 448 Education

PRISONER PETITIONS

Habeas Corpus:
- ☐ 463 Alien Detainee
- ☐ 510 Motions to Vacate Sentence
- ☐ 530 General
- ☐ 535 Death Penalty

Other:
- ☐ 540 Mandamus & Other
- ☐ 550 Civil Rights
- ☐ 555 Prison Condition
- ☐ 560 Civil Detainee - Conditions of Confinement

FORFEITURE/PENALTY
- ☐ 625 Drug Related Seizure of Property 21 USC 881
- ☐ 690 Other

LABOR
- ☐ 710 Fair Labor Standards Act
- ☐ 720 Labor/Management Relations
- ☐ 740 Railway Labor Act
- ☐ 751 Family and Medical Leave Act
- ☐ 790 Other Labor Litigation
- ☐ 791 Employee Retirement Income Security Act

IMMIGRATION
- ☐ 462 Naturalization Application
- ☐ 465 Other Immigration Actions

BANKRUPTCY
- ☐ 422 Appeal 28 USC 158
- ☐ 423 Withdrawal 28 USC 157

PROPERTY RIGHTS
- ☐ 820 Copyrights
- ☒ 830 Patent
- ☐ 840 Trademark

SOCIAL SECURITY
- ☐ 861 HIA (1395ff)
- ☐ 862 Black Lung (923)
- ☐ 863 DIWC/DIWW (405(g))
- ☐ 864 SSID Title XVI
- ☐ 865 RSI (405(g))

FEDERAL TAX SUITS
- ☐ 870 Taxes (U.S. Plaintiff or Defendant)
- ☐ 871 IRS—Third Party 26 USC 7609

OTHER STATUTES
- ☐ 375 False Claims Act
- ☐ 400 State Reapportionment
- ☐ 410 Antitrust
- ☐ 430 Banks and Banking
- ☐ 450 Commerce
- ☐ 460 Deportation
- ☐ 470 Racketeer Influenced and Corrupt Organizations
- ☐ 480 Consumer Credit
- ☐ 490 Cable/Sat TV
- ☐ 850 Securities/Commodities/ Exchange
- ☐ 890 Other Statutory Actions
- ☐ 891 Agricultural Acts
- ☐ 893 Environmental Matters
- ☐ 895 Freedom of Information Act
- ☐ 896 Arbitration
- ☐ 899 Administrative Procedure Act/Review or Appeal of Agency Decision
- ☐ 950 Constitutionality of State Statutes

V. ORIGIN *(Place an "X" in One Box Only)*

☒ 1 Original Proceeding ☐ 2 Removed from State Court ☐ 3 Remanded from Appellate Court ☐ 4 Reinstated or Reopened ☐ 5 Transferred from Another District *(specify)* ☐ 6 Multidistrict Litigation

VI. CAUSE OF ACTION

Cite the U.S. Civil Statute under which you are filing *(Do not cite jurisdictional statutes unless diversity)*:
28 U.S.C. §§ 1331 and 1338(a)

Brief description of cause:
Patent Infringement of US Patent No. 8,261,475

VII. REQUESTED IN COMPLAINT:

☐ CHECK IF THIS IS A **CLASS ACTION** UNDER RULE **23, F.R.Cv.P.**

DEMAND $

CHECK YES only if demanded in complaint:
JURY DEMAND: ☒ Yes ☐ No

VIII. RELATED CASE(S) IF ANY

(See instructions): JUDGE _____ DOCKET NUMBER _____

DATE 8.27.15

SIGNATURE OF ATTORNEY OF RECORD /s/ Frederick A. Tecce

FOR OFFICE USE ONLY

RECEIPT # _____ AMOUNT _____ APPLYING IFP _____ JUDGE _____ MAG. JUDGE _____

IN THE UNITED STATES DISTRICT COURT
FOR THE EASTERN DISTRICT OF PENNSYLVANIA

CASE MANAGEMENT TRACK DESIGNATION FORM

LogoPaint A/S	:	CIVIL ACTION
v.	:	
3D Sport Sign SI; Carsten Jensen Charmig; Xavier Palmerola Fernandez; Jose Isabal Roca; and Traffic Sports USA, Inc.	:	NO.

In accordance with the Civil Justice Expense and Delay Reduction Plan of this court, counsel for plaintiff shall complete a Case Management Track Designation Form in all civil cases at the time of filing the complaint and serve a copy on all defendants. (See § 1:03 of the plan set forth on the reverse side of this form.) In the event that a defendant does not agree with the plaintiff regarding said designation, that defendant shall, with its first appearance, submit to the clerk of court and serve on the plaintiff and all other parties, a Case Management Track Designation Form specifying the track to which that defendant believes the case should be assigned.

SELECT ONE OF THE FOLLOWING CASE MANAGEMENT TRACKS:

(a) Habeas Corpus – Cases brought under 28 U.S.C. § 2241 through § 2255. ( )

(b) Social Security – Cases requesting review of a decision of the Secretary of Health and Human Services denying plaintiff Social Security Benefits. ( )

(c) Arbitration – Cases required to be designated for arbitration under Local Civil Rule 53.2. ( )

(d) Asbestos – Cases involving claims for personal injury or property damage from exposure to asbestos. ( )

(e) Special Management – Cases that do not fall into tracks (a) through (d) that are commonly referred to as complex and that need special or intense management by the court. (See reverse side of this form for a detailed explanation of special management cases.) ( )

(f) Standard Management – Cases that do not fall into any one of the other tracks. (X)

8.27.15		LogoPaint A/S
Date	**Attorney-at-law**	**Attorney for**
215-965-1294	215-965-1331	ftecce@panitchlaw.com
Telephone	**FAX Number**	**E-Mail Address**

(Civ. 660) 10/02

Civil Justice Expense and Delay Reduction Plan
Section 1:03 - Assignment to a Management Track

(a) The clerk of court will assign cases to tracks (a) through (d) based on the initial pleading.

(b) In all cases not appropriate for assignment by the clerk of court to tracks (a) through (d), the plaintiff shall submit to the clerk of court and serve with the complaint on all defendants a case management track designation form specifying that the plaintiff believes the case requires Standard Management or Special Management. In the event that a defendant does not agree with the plaintiff regarding said designation, that defendant shall, with its first appearance, submit to the clerk of court and serve on the plaintiff and all other parties, a case management track designation form specifying the track to which that defendant believes the case should be assigned.

(c) The court may, on its own initiative or upon the request of any party, change the track assignment of any case at any time.

(d) Nothing in this Plan is intended to abrogate or limit a judicial officer's authority in any case pending before that judicial officer, to direct pretrial and trial proceedings that are more stringent than those of the Plan and that are designed to accomplish cost and delay reduction.

(e) Nothing in this Plan is intended to supersede Local Civil Rules 40.1 and 72.1, or the procedure for random assignment of Habeas Corpus and Social Security cases referred to magistrate judges of the court.

SPECIAL MANAGEMENT CASE ASSIGNMENTS
(See §1.02 (e) Management Track Definitions of the
Civil Justice Expense and Delay Reduction Plan)

Special Management cases will usually include that class of cases commonly referred to as "complex litigation" as that term has been used in the Manuals for Complex Litigation. The first manual was prepared in 1969 and the Manual for Complex Litigation Second, MCL 2d was prepared in 1985. This term is intended to include cases that present unusual problems and require extraordinary treatment. See §0.1 of the first manual. Cases may require special or intense management by the court due to one or more of the following factors: (1) large number of parties; (2) large number of claims or defenses; (3) complex factual issues; (4) large volume of evidence; (5) problems locating or preserving evidence; (6) extensive discovery; (7) exceptionally long time needed to prepare for disposition; (8) decision needed within an exceptionally short time; and (9) need to decide preliminary issues before final disposition. It may include two or more related cases. Complex litigation typically includes such cases as antitrust cases; cases involving a large number of parties or an unincorporated association of large membership; cases involving requests for injunctive relief affecting the operation of large business entities; patent cases; copyright and trademark cases; common disaster cases such as those arising from aircraft crashes or marine disasters; actions brought by individual stockholders; stockholder's derivative and stockholder's representative actions; class actions or potential class actions; and other civil (and criminal) cases involving unusual multiplicity or complexity of factual issues. See §0.22 of the first Manual for Complex Litigation and Manual for Complex Litigation Second, Chapter 33.

UNITED STATES DISTRICT COURT

FOR THE EASTERN DISTRICT OF PENNSYLVANIA — DESIGNATION FORM to be used by counsel to indicate the category of the case for the purpose of assignment to appropriate calendar.

Address of Plaintiff: LogoPaint A/S, Tysklandsvej 6, DK-7100 Vejle, Denmark

Address of Defendant: 3D Sport Signs SI; Carsten Jensen Charmig; Xavier Palmerola Fernadez; Jose Isabal Roca; and Traffic Sports USA, Inc., 501 Brickell Key Drive, Suite 407, Miami, Florida 33131

Place of Accident, Incident or Transaction: _____

(Use Reverse Side For Additional Space)

Does this civil action involve a nongovernmental corporate party with any parent corporation and any publicly held corporation owning 10% or more of its stock?

(Attach two copies of the Disclosure Statement Form in accordance with Fed.R.Civ.P. 7.1(a)) Yes☐ No☐

Does this case involve multidistrict litigation possibilities? Yes☐ No☒

RELATED CASE, IF ANY:

Case Number: _____ Judge _____ Date Terminated: _____

Civil cases are deemed related when yes is answered to any of the following questions:

1. Is this case related to property included in an earlier numbered suit pending or within one year previously terminated action in this court? Yes☐ No☒
2. Does this case involve the same issue of fact or grow out of the same transaction as a prior suit pending or within one year previously terminated action in this court? Yes☐ No☒
3. Does this case involve the validity or infringement of a patent already in suit or any earlier numbered case pending or within one year previously terminated action in this court? Yes☐ No☒
4. Is this case a second or successive habeas corpus, social security appeal, or pro se civil rights case filed by the same individual? Yes☐ No☒

CIVIL: **(Place ✔ in ONE CATEGORY ONLY)**

A. *Federal Question Cases*:

1. ☐ **Indemnity Contract, Marine Contract, and All Other Contracts**
2. ☐ FELA
3. ☐ Jones Act-Personal Injury
4. ☐ Antitrust
5. ☒ Patent
6. ☐ Labor-Management Relations
7. ☐ Civil Rights
8. ☐ Habeas Corpus
9. ☐ Securities Act(s) Cases
10. ☐ Social Security Review Cases
11. ☐ All other Federal Question Cases

(Please specify) _____

B. *Diversity Jurisdiction Cases*:

1. ☐ Insurance Contract and Other Contracts
2. ☐ Airplane Personal Injury
3. ☐ Assault, Defamation
4. ☐ Marine Personal Injury
5. ☐ Motor Vehicle Personal Injury
6. ☐ Other Personal Injury (Please specify)
7. ☐ Products Liability
8. ☐ Products Liability — **Asbestos**
9. ☐ All other **Diversity Cases**

(Please specify) _____

ARBITRATION CERTIFICATION

(Check Appropriate Category)

I, Frederick A. Tecce, counsel of record do hereby certify:

☐ Pursuant to Local Civil Rule 53.2, Section 3(c)(2), that to the best of my knowledge and belief, the damages recoverable in this civil action case exceed the sum of $150,000.00 exclusive of interest and costs;

✔ Relief other than monetary damages is sought.

DATE: 8.27.15 _____ 47,298

Attorney-at-Law Attorney I.D.#

NOTE: A trial de novo will be a trial by jury only if there has been compliance with F.R.C.P. 38.

I certify that, to my knowledge, the within case is not related to any case now pending or within one year previously terminated action in this court except as noted above.

DATE 8.27.15 _____ 47,298

Attorney-at-Law Attorney I.D.#

CIV. 609 (5/2012)

JS 44 Reverse (Rev. 12/12)

INSTRUCTIONS FOR ATTORNEYS COMPLETING CIVIL COVER SHEET FORM JS 44

Authority For Civil Cover Sheet

The JS 44 civil cover sheet and the information contained herein neither replaces nor supplements the filings and service of pleading or other papers as required by law, except as provided by local rules of court. This form, approved by the Judicial Conference of the United States in September 1974, is required for the use of the Clerk of Court for the purpose of initiating the civil docket sheet. Consequently, a civil cover sheet is submitted to the Clerk of Court for each civil complaint filed. The attorney filing a case should complete the form as follows:

I.(a) **Plaintiffs-Defendants.** Enter names (last, first, middle initial) of plaintiff and defendant. If the plaintiff or defendant is a government agency, use only the full name or standard abbreviations. If the plaintiff or defendant is an official within a government agency, identify first the agency and then the official, giving both name and title.

(b) **County of Residence.** For each civil case filed, except U.S. plaintiff cases, enter the name of the county where the first listed plaintiff resides at the time of filing. In U.S. plaintiff cases, enter the name of the county in which the first listed defendant resides at the time of filing. (NOTE: In land condemnation cases, the county of residence of the "defendant" is the location of the tract of land involved.)

(c) **Attorneys.** Enter the firm name, address, telephone number, and attorney of record. If there are several attorneys, list them on an attachment, noting in this section "(see attachment)".

II. **Jurisdiction.** The basis of jurisdiction is set forth under Rule 8(a), F.R.Cv.P., which requires that jurisdictions be shown in pleadings. Place an "X" in one of the boxes. If there is more than one basis of jurisdiction, precedence is given in the order shown below.
United States plaintiff. (1) Jurisdiction based on 28 U.S.C. 1345 and 1348. Suits by agencies and officers of the United States are included here.
United States defendant. (2) When the plaintiff is suing the United States, its officers or agencies, place an "X" in this box.
Federal question. (3) This refers to suits under 28 U.S.C. 1331, where jurisdiction arises under the Constitution of the United States, an amendment to the Constitution, an act of Congress or a treaty of the United States. In cases where the U.S. is a party, the U.S. plaintiff or defendant code takes precedence, and box 1 or 2 should be marked.
Diversity of citizenship. (4) This refers to suits under 28 U.S.C. 1332, where parties are citizens of different states. When Box 4 is checked, the citizenship of the different parties must be checked. (See Section III below; **NOTE: federal question actions take precedence over diversity cases.)**

III. **Residence (citizenship) of Principal Parties.** This section of the JS 44 is to be completed if diversity of citizenship was indicated above. Mark this section for each principal party.

IV. **Nature of Suit.** Place an "X" in the appropriate box. If the nature of suit cannot be determined, be sure the cause of action, in Section VI below, is sufficient to enable the deputy clerk or the statistical clerk(s) in the Administrative Office to determine the nature of suit. If the cause fits more than one nature of suit, select the most definitive.

V. **Origin.** Place an "X" in one of the six boxes.
Original Proceedings. (1) Cases which originate in the United States district courts.
Removed from State Court. (2) Proceedings initiated in state courts may be removed to the district courts under Title 28 U.S.C., Section 1441. When the petition for removal is granted, check this box.
Remanded from Appellate Court. (3) Check this box for cases remanded to the district court for further action. Use the date of remand as the filing date.
Reinstated or Reopened. (4) Check this box for cases reinstated or reopened in the district court. Use the reopening date as the filing date.
Transferred from Another District. (5) For cases transferred under Title 28 U.S.C. Section 1404(a). Do not use this for within district transfers or multidistrict litigation transfers.
Multidistrict Litigation. (6) Check this box when a multidistrict case is transferred into the district under authority of Title 28 U.S.C. Section 1407. When this box is checked, do not check (5) above.

VI. **Cause of Action.** Report the civil statute directly related to the cause of action and give a brief description of the cause. **Do not cite jurisdictional statutes unless diversity.** Example: U.S. Civil Statute: 47 USC 553 Brief Description: Unauthorized reception of cable service

VII. **Requested in Complaint.** Class Action. Place an "X" in this box if you are filing a class action under Rule 23, F.R.Cv.P.
Demand. In this space enter the actual dollar amount being demanded or indicate other demand, such as a preliminary injunction.
Jury Demand. Check the appropriate box to indicate whether or not a jury is being demanded.

VIII. **Related Cases.** This section of the JS 44 is used to reference related pending cases, if any. If there are related pending cases, insert the docket numbers and the corresponding judge names for such cases.

Date and Attorney Signature. Date and sign the civil cover sheet.

IN THE UNITED STATES DISTRICT COURT
FOR THE EASTERN DISTRICT OF PENNSYLVANIA

LOGOPAINT A/S	:	
Plaintiff,	:	
	:	**Civ. No. 15-CV- _____**
v.	:	
3D SPORT SIGNS SI; CARSTEN JENSEN CHARMIG; XAVIER PALMEROLA FERNANDEZ; JOSÉ ISÁBAL ROCA; AND TRAFFIC SPORTS USA, INC.	:	**JURY TRIAL DEMANDED**
Defendants.	:	

COMPLAINT FOR PATENT INFRINGEMENT

COMES NOW, plaintiff LogoPaint A/S ("LogoPaint" or "Plaintiff"), by and through its undersigned counsel, and for its Complaint against 3D Sport Signs SI ("3D Sport Signs"), and Carsten Jensen Charmig, Xavier Palmerola Fernandez and José Isábal Roca (collectively, "the individual defendants"), and Traffic Sports USA, Inc. ("Traffic USA") alleges as follows:

NATURE OF THE ACTION

1. This is a civil action for patent infringement arising under the patent laws of the United States, 35 U.S.C. §§ 1 *et seq*.

2. Defendant 3D Sport Signs has infringed, has contributed to the infringement of, and/or has actively induced the infringement of LogoPaint's United States Letters Patent No. 8,261,475 ("the '475 patent").

3. Defendants 3D Sport Signs, Traffic USA, and the individual defendants have contributed to the infringement and/or have actively induced the infringement of the '475 Patent.

4. LogoPaint is the legal owner by assignment of the '475 patent, which was duly and legally issued by the United States Patent and Trademark Office.

5. LogoPaint seeks permanent injunctive relief, lost profits and other monetary damages. Because the Defendants' infringement has been willful, LogoPaint seeks treble damages and an award of its attorneys' fees, costs, and expenses incurred with this Action.

THE PARTIES

6. Plaintiff LogoPaint is a corporation organized under the laws of Denmark, with its principal place of business at Tysklandsvej 6, DK-7100 Vejle, Denmark.

7. Upon information and belief, Defendant Traffic USA is incorporated under the laws of Florida, and has a regular and established place of business at 501 Brickell Key Drive, Suite 407, Miami, Florida 33131.

8. Upon information and belief, Defendant 3D Sport Signs is a corporation of Spain with a regular and established place of business at Ronda General Mitre, 126 2n-4a, 08022 Barcelona, Spain.

9. Upon information and belief, Defendant José Isábal Roca is an officer of 3D Sport Signs and is employed at its offices in Barcelona, Spain.

10. Upon information and belief, Defendant Xavier Palmerola Fernandez is an officer of 3D Sports Signs and is employed at its offices in Barcelona, Spain.

11. Upon information and belief, Defendant Carsten Jensen Charmig is an officer of 3D Sports Signs at its offices in Barcelona, Spain.

JURISDICTION AND VENUE

12. This action arises under the patent laws of the United States, Title 35 U.S.C. § 1 *et seq*. This Court has subject matter jurisdiction under 28 U.S.C. §§ 1331 and 1338(a).

13. This Court may properly exercise personal jurisdiction over 3D Sports Signs because 3D Sport Signs has infringed, has contributed to the infringement of and/or has actively induced the infringement of the '475 patent in this Judicial District and elsewhere in the United States.

14. This Court may properly exercise personal jurisdiction over Traffic USA and the individual defendants because they have actively induced and/or contributed to the infringement of the '475 patent in this Judicial District and elsewhere in the United States. Traffic USA and the individual defendants have thus purposefully availed themselves of the privilege of conducting business within this District; have established sufficient minimum contacts with this District such that they should reasonably and fairly anticipate being haled into court in this District; have purposefully directed activities in this State; and at least a portion of the patent infringement claims alleged herein arise out of or are related to one or more of the foregoing activities in this Judicial District.

15. Venue is proper in this judicial district pursuant to 28 U.S.C. §§ 1391 and 1400 because the individual defendants and 3D Sport Signs are not resident in the United States and because certain of the acts complained of herein by all defendants occurred in this Judicial District.

GENERAL ALLEGATIONS

16. In April, 2015, LogoPaint submitted it unsuccessful bid to Traffic USA to supply its patented 3D CamCarpets® for use in the 2015 Gold Cup tournament games.

17. 3D Sport Signs makes 3-D advertising carpets and is the beneficiary of a license to the intellectual property of LogoPaint in Spain for basketball and in Europe for Euroleague basketball.

18. Upon information and belief, prior to July 7, 2015, Traffic USA, the holder of the media and marketing rights to the 2015 Gold Cup tournament of the Confederation of North, Central American, and Caribbean Association Football ("CONCACAF"), awarded to 3D Sport Signs the contract to supply 3-D advertising carpets to the various games of the CONCACAF 2015 Gold Cup tournament to be played in various venues in the United States, including two within this Judicial District.

19. Upon information and belief, the individual defendants authorized, specifically directed, and personally participated in the activities of 3D Sport Signs associated with its bid and the subsequent importation into the United States and the supply of 3D advertising carpets to Traffic USA for use and then used at the 2015 Gold Cup tournament games in July 2015 in the United States including this Judicial District. Upon information and belief, the individual defendants actively aided and abetted the infringement by 3D Sport Signs of LogoPaint's rights conferred by the '475 patent. Upon information and belief, the individual defendants personally took an active role in the infringement by 3D Sport Signs and/or directed other officers, agents, or employees of 3D Sport Signs to infringe.

20. The use of 3D Sport Signs' 3D carpets at the various venues of the 2015 Gold Cup tournament, including venues within this Judicial District, was a direct infringement of the '475 patent and Traffic USA and the individual defendants actively induced and/or contributed to that direct infringement.

THE '475 PATENT

21. On September 11, 2012, the United States Patent and Trademark Office issued the '475 patent entitled, "Figurative Print On A Plane Print Carrier And Use Of Such Figurative Print." A true and correct copy of the '475 Patent is attached as Exhibit A.

22. LogoPaint is the owner of all rights, title, and interest in the '475 patent with full and exclusive right to bring suit to enforce the '475 patent, including the right to recover for past infringement.

23. The '475 patent is valid and enforceable.

24. Upon information and belief, no later than July 6, 2015, defendants Traffic USA, 3D Sport Signs, and the individual defendants were aware of the '475 patent.

CAUSES OF ACTION

COUNT I
Direct Infringement of the '475 Patent

25. The allegations of paragraphs 1-24 are incorporated as though fully set forth herein.

26. Upon information and belief, in violation of 35 U.S.C. § 271, defendant 3D Sport Signs performed all the steps of the method claimed in the '475 patent, either personally or through others acting under its direction or control, when it made, had made, sold, offered for sale, and/or imported into the United States, including this Judicial District, 3-D advertising carpets. For example, 3D Sport Signs directly infringed the method of claim 1 of the '475 patent by performing, either by 3D Sport Signs personally or through others acting under its direction or control, the following steps: (1) an image to be viewed was provided, whereby this image had first, second and third orthogonal directions; (2) this image was reconfigured to a planar image whereby the first orthogonal direction and the second orthogonal direction formed an angle of 90 degrees minus a first predetermined non-zero angle and whereby the second orthogonal direction and the third orthogonal direction formed an angle of 90 degrees plus a second predetermined non-zero angle; (3) the reconfigured planar image was placed at a given angle with respect to a viewer whereby said image appeared to the viewer to protrude from the reconfigured planar

image and had the first, second and third orthogonal directions, wherein the first and second orthogonal directions formed a plane different from the plane of the planar image; and (4) wherein the image comprises a primary figurative element and a secondary figurative element, wherein the secondary figurative element depicted a third dimension of the image.

COUNT II
Inducement of Infringement of the '475 Patent

27. The allegations of paragraphs 1-26 are incorporated as though fully set forth herein.

28. 3D Sport Signs, Traffic USA, and the individual defendants specifically intended that the 3-D advertising carpets made, sold, and/or imported into the United States by 3D Sport Signs were to be used and were used at the various games of the CONCACAF 2015 Gold Cup tournament to be played in various venues in the United States, including two within this Judicial District and knew that this use constituted infringement of the '475 patent. The deliberate actions of 3D Sport Signs, Traffic USA, and the individual defendants resulted in the infringement of the '475 patent during the CONCACAF 2015 Gold Cup tournament. Further, 3D Sport Signs, Traffic USA, and the individual defendants knew and specifically intended that their acts would induce the direct infringement of the '475 patent.

29. 3D Sport Signs advertised its 3-D advertising carpets and their infringing use at least through its Internet website, http://www.3dsportsigns.com/eng/index.html.

30. Upon information and belief, prior to July 7, 2015, 3D Sport Signs and the individual defendants submitted a bid to Traffic USA, the holder of the media and marketing rights to the 2015 Gold Cup tournament of the Confederation of North, Central American, and Caribbean Association Football ("CONCACAF"), and Traffic USA awarded to 3D Sport Signs and the individual defendants the contract to supply 3-D advertising carpets to the various games of the

CONCACAF 2015 Gold Cup tournament to be played in various venues in the United States, including two within this Judicial District.

31. Upon information and belief, 3D Sport Signs and the individual defendants provided to Traffic USA technical support or other services, instructions and manuals that describe, instruct, and offer support and technical assistance that encouraged the infringing use of the 3-D advertising carpets at the various games of the CONCACAF 2015 Gold Cup tournament played at various venues in the United States, including two within this Judicial District.

32. Upon information and belief, the individual defendants control and direct the activities of 3D Sport Signs, and directly, personally, and actively aided, instigated, induced, and abetted the infringement by 3D Sport Signs, and personally took an active role in the design, advertising, promotion, marketing, sale, and infringement by the 3-D advertising carpets of 3D Sport Signs and/or specifically directed other officers, agents, or employees of 3D Sport Signs to infringe. Upon information and belief, the strategic management decisions made by the individual defendants as owners of defendant 3D Sport Signs encouraged, directed, and caused the infringement by 3D Sport Signs in this Judicial District and at other venues in the United States. Upon information and belief, the individual defendants personally communicated with Traffic USA to promote and market the 3-D advertising carpets of 3D Sport Signs, and wrote the bid submitted to and accepted by Traffic USA for those 3-D advertising carpets. 3D Sport Signs, Traffic USA and the individual defendants acted with the specific intent to encourage the infringement of the '475 patent, actually induced the infringement of the '475 patent, and knew that their actions would induce the infringement of the '475 patent at the various games of the CONCACAF 2015 Gold Cup tournament held in the United States. The individual defendants

knowingly and deliberately assisted and abetted the infringement of the '475 patent by 3D Sport Signs.

33. Upon information and belief, prior to July 7, 2015, Traffic USA placed in the public domain a presentation regarding advertising opportunities at the various games of the CONCACAF 2015 Gold Cup tournament held in the United States. That presentation included a list of the venues for the tournament and the dates for the games and provided a "field map" of the various venues that included the placement of the 3-D advertising carpets available to advertisers during the tournament's games. The prices for advertising during the tournament were "available upon request" and the last page of the presentation provided the telephone number of Traffic USA and the email address of its sales department, sales@trafficsports.com.

34. During various games of the CONCACAF 2015 Gold Cup tournament held in the United States, 3-D advertising carpets supplied to Traffic USA or those acting under the control and direction of Traffic USA were deployed and used. Upon information and belief, that use occurred during every game of the CONCACAF 2015 Gold Cup tournament held in the United States.

COUNT III
Contributory Infringement of the '475 Patent

35. The allegations of paragraphs 1-34 are incorporated as though fully set forth herein.

36. The 3-D advertising carpets of 3D Sport Signs have no substantial non-infringing use. The only substantial use of those 3-D advertising carpets is to practice the method claimed in the '475 patent; thus, those carpets have no use apart from infringing the claims of the '475 patent.

37. 3D Sport Signs and the individual defendants and Traffic USA offered to sell and sold within the United States and/or imported into the United States the 3D advertising carpets of

3D Sport Signs for use in practicing the method patented by the '475 patent, constituting a material part of that method, knowing that those carpets were especially made or especially adapted for use in the infringement of the '475 patent, and not a staple article or commodity of commerce suitable for substantial noninfringing use, and are liable as contributory infringers.

PRAYER FOR RELIEF

WHEREFORE, Plaintiff LogoPaint respectfully requests the following relief:

A. The entry of judgment in its favor that the Defendants have infringed the '475 patent.

B. The entry of a preliminary and permanent injunction enjoining the Defendants, and for the corporate Defendants their respective officers, agents, servants, employees, attorneys, parent and subsidiary entities, assigns and successors in interest, and those persons in active concert or participation with them, enjoining them from infringement, inducement of infringement, and contributory infringement of the '475 patent, including but not limited to a preliminary and permanent injunction against making, using, selling, and/or offering for sale within the United States, and/or importing into the United States, any product whose use infringes any claim of the '475 patent.

C. The entry of judgment against the Defendants jointly and severally for damages adequate to compensate LogoPaint for Defendants' infringement of the '475 patent.

D. The entry of judgment against the Defendants jointly and severally holding their infringement to be willful and for treble damages pursuant to 35 U.S.C. § 284, but in no event less than a reasonable royalty.

E. Prejudgment and post-judgment interest.

F. A declaration that this Action is exceptional pursuant to 35 U.S.C. § 285, and an award to LogoPaint of its attorneys' fees, costs, and expenses incurred in connection with this Action; and

G. Such other and further relief as this Court find just, equitable, and proper.

Dated: August 27, 2015

Respectfully submitted,

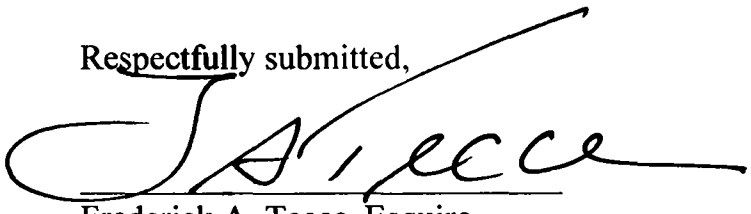

Frederick A. Tecce, Esquire
PA Bar No. 47298
PANITCH SCHWARZE BELISARIO & NADEL LLP
2005 Market Street, Suite 2200
One Commerce Square
Philadelphia, PA 19103
Telephone: (215) 965-1294
Facsimile: (215) 965-1331
Email: ftecce@panitchlaw.com

Counsel for Plaintiff
LogoPaint A/S

OF COUNSEL
Scott A. Felder, Esq.
Eric H. Weisblatt, Esq.
Wiley Rein LLP
1776 K Street, N.W.
Washington, D.C. 20006

Case 2:15-cv-04865-GJP Document 1 Filed 08/28/2015 Page 16 of 30

EXHIBIT A

US008261475B1

(12) **United States Patent**
Thomsen

(10) **Patent No.: US 8,261,475 B1**
(45) **Date of Patent: Sep. 11, 2012**

(54) **FIGURATIVE PRINT ON A PLANE PRINT CARRIER AND USE OF SUCH FIGURATIVE PRINT**

(76) Inventor: **Erik Brogaard Thomsen**, Vejle (DK)

(*) Notice: Subject to any disclaimer, the term of this patent is extended or adjusted under 35 U.S.C. 154(b) by 1076 days.

(21) Appl. No.: **09/381,771**

(22) PCT Filed: **Mar. 25, 1998**

(86) PCT No.: **PCT/DK98/00119**

§ 371 (c)(1),
(2), (4) Date: **Oct. 26, 1999**

(87) PCT Pub. No.: **WO98/43231**

PCT Pub. Date: **Oct. 1, 1998**

(30) **Foreign Application Priority Data**

Mar. 25, 1997 (DK) ..... 9700140 U

(51) **Int. Cl.**
G09F 7/00 (2006.01)

(52) **U.S. Cl.** **40/596**

(58) **Field of Classification Search** 40/427, 40/615, 596, 624; 283/86; 345/144, 471, 345/467, 469

See application file for complete search history.

(56) **References Cited**

U.S. PATENT DOCUMENTS

1,592,034 A *	7/1926	Macy		
3,249,994 A *	5/1966	Hill		29/460
3,675,355 A *	7/1972	Shanok et al.		40/596
4,450,640 A *	5/1984	Shapiro et al.		40/596
4,667,236 A	5/1987	Dresdner		358/160
4,956,706 A	9/1990	Ohba		358/93
5,421,583 A *	6/1995	Gluck		40/160
5,941,002 A *	8/1999	Rusin		40/606

FOREIGN PATENT DOCUMENTS

DE	4214819	10/1992
FR	2608788	12/1986
GB	2315794 A *	2/1998
WO	9304559	3/1993

OTHER PUBLICATIONS

Fontworks, Sanity copywritten 1997 Dan Redding & Blue Knot Software.*

Anamorphoses chasse a travers les collections due musee. Musee des Arts Decoratifs Paris, 27 fevrier-9 mai 1976.

Gobes Handbuch der Mathematik; 950 Textabbildungen, davon uber 700 mehrfarbig, und 72 Bildtafeln, Buch Und Zeit Verlagsges, M.B. H. Koln 1967.

* cited by examiner

Primary Examiner — Joanne Silbermann
(74) *Attorney, Agent, or Firm* — McCarter & English, LLP

(57) **ABSTRACT**

The invention relates to a figurative print for a plane print carrier. In a preferred embodiment, the figurative print comprises a primary, a secondary, and a tertiary figurative element. Each of the three elements shows an angular displacement of between 0° and 90° in relation to a perpendicular view of the figurative print on the plane print carrier so that the figurative print appears with a special effect, when the print is viewed from an oblique position relative to a perpendicular viewing.

10 Claims, 3 Drawing Sheets

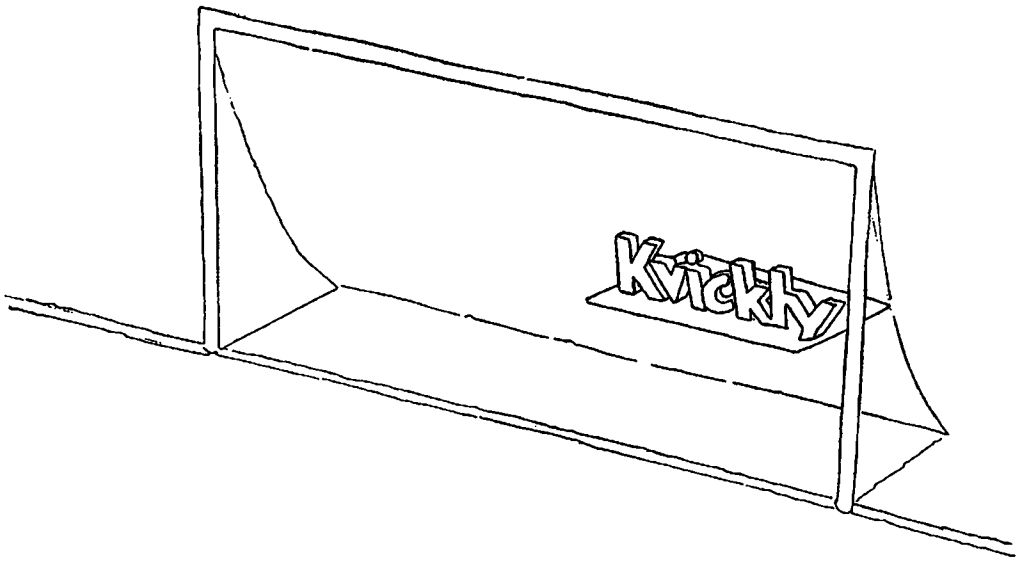

Case 2:15-cv-04865-GJP Document 1 Filed 08/27/15 Page 15 of 30

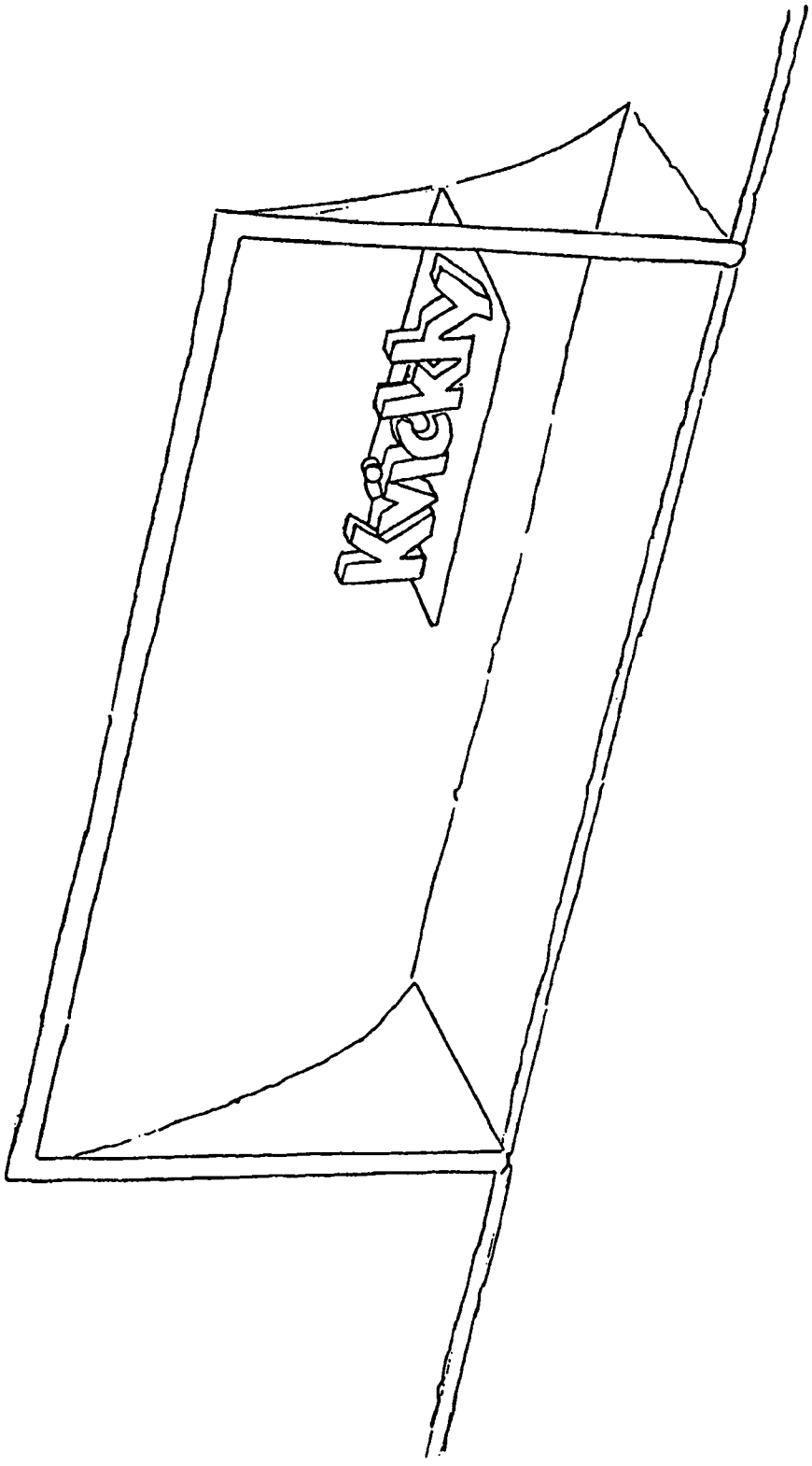

FIG. 1

Case 2:15-cv-04865-GJP Document 1 Filed 08/27/15 Page 19 of 30

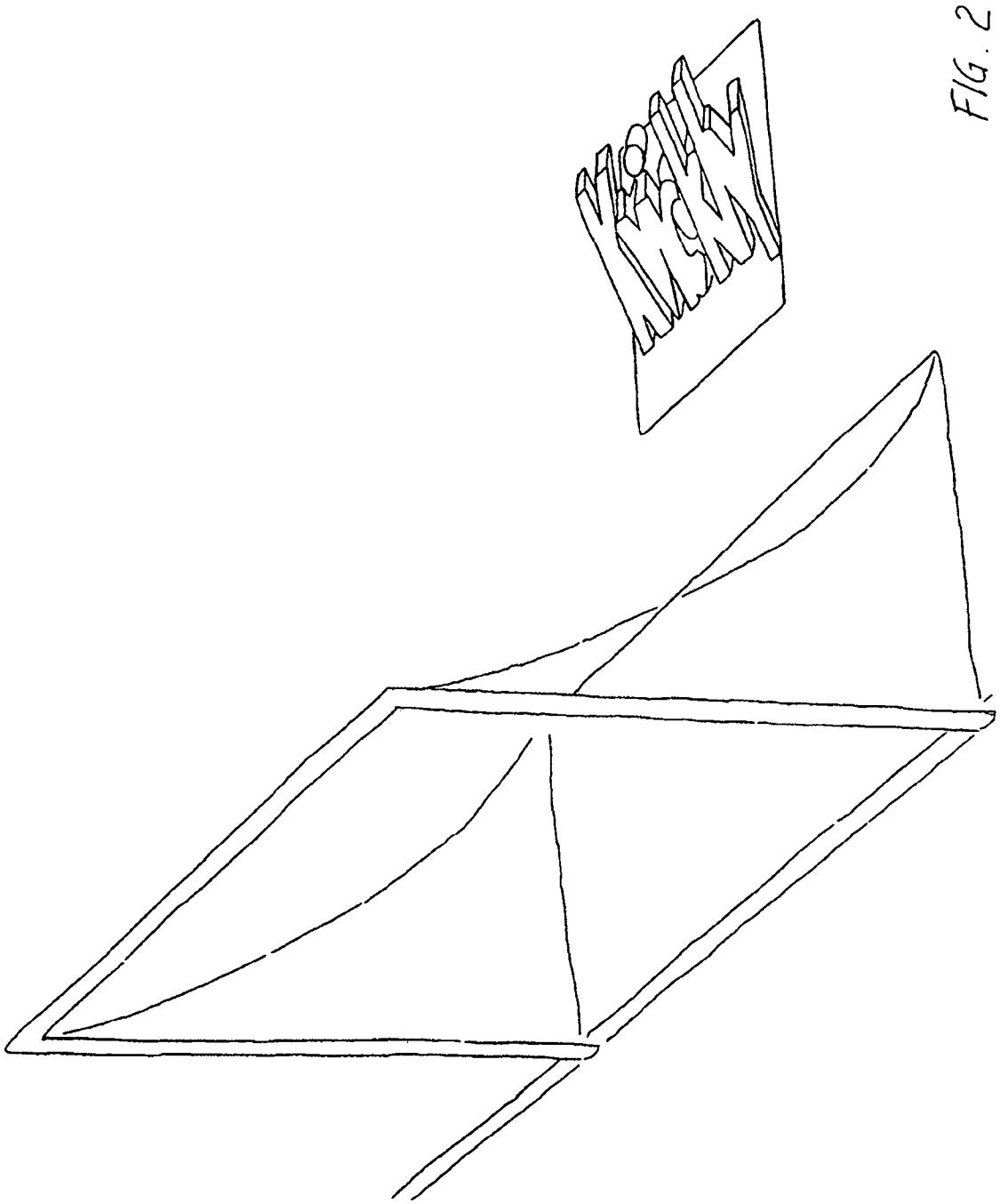

FIG. 2

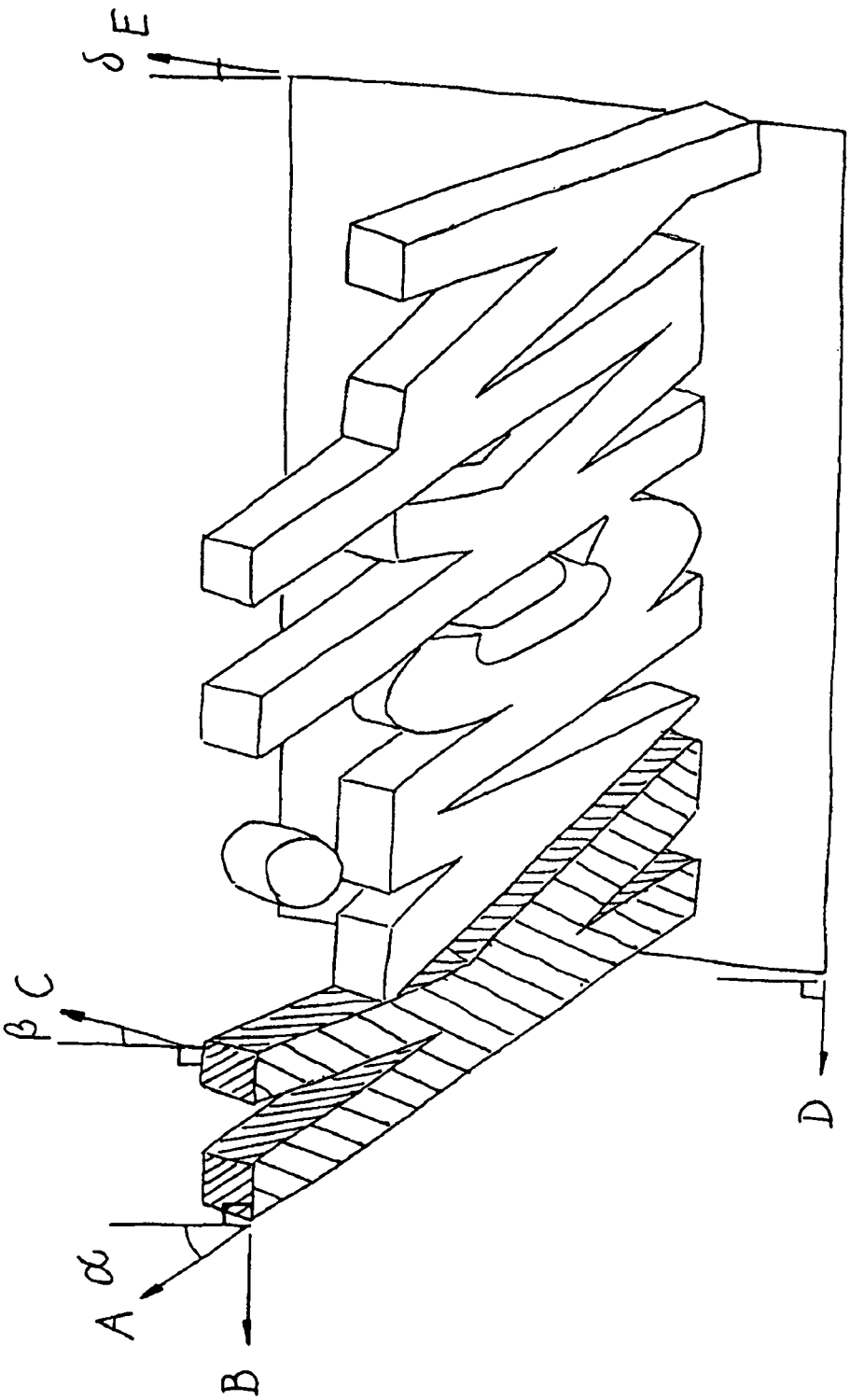

FIG. 3

FIGURATIVE PRINT ON A PLANE PRINT CARRIER AND USE OF SUCH FIGURATIVE PRINT

BACKGROUND OF THE INVENTION

The present invention relates to an advertisement print being printed on a plane print carrier, and which print is plane and lies in the same plane as the print carrier and comprises a primary figurative element depicting an advertisement in a first dimension and a second dimension, which primary figurative element when seen in a direction perpendicular to the plane of the print carrier constitutes an angle $\alpha+90°$ between the first dimension and the second dimension, and which primary figurative element when seen in a given oblique direction between a viewer and the print shows the first dimension and the second dimension as forming a plane of advertisement, which plane of advertisement is directed obliquely outwards of, preferably perpendicular to, the plane of the print carrier.

It is known to apply a figurative print, like an advertising print, on a plane print carrier, like a football field. The print is depicted in two dimensions, like the print will normally appear on a plane print carrier. Thus, the print is intended to be viewed perpendicularly to the plane print carrier such as a lawn. Especially in connection with football fields, this is an advantage so that many of the spectators at the football match may see the advertising print. However, it is a drawback that a spectator like a television viewer of a television transmitted football match does not get the full benefit from the advertising value of the advertising print, as a given TV camera is not necessarily placed and views the advertising print in such a way that the advertising print appears in the best possible way for a television viewer.

WO 93/04559 describes an image depicted on as example a playing field for a sporting event. The image is depicted in a so-called inverse perspective form resulting in that when a viewer from a selected spot outside the playing field views the inverse perspective formed image, then the image appears as a plane image having a line of sight corresponding to the line of sight of the viewer. In other words the line of sight of the inverse perspective formed image appears as a line of sight perpendicular to the inverse perspective formed image and this line perpendicular to the image corresponds to the line of sight of a viewer. However, this kind of depiction involves the problem that the image does not appear to be part of the surroundings of the playing field and thus the image is confusing to view when the viewer at the same time views the sporting event at the playing field. The viewer will not be able to view the sporting event without being confused by the inversed perspective formed image because this image has a line of sight corresponding to the line of sight of the viewer but the sporting event and the surroundings of the playing field is, of course, not only arranged for the purpose of the selected viewer in question but of course arranged for the purpose of all the other spectators watching the sporting event at the playing field. The line of sight of the other spectators is different than the one and only selected viewer for which the inverse perspective formed image is made.

DE-42 14 819 describes a depiction at the inside lateral walls of a tunnel. The purpose of such a depiction is to limit the effect of the so-called "tunnel sight" which may appear in long tunnels and can have dangerous effect to traffic when the drivers leave the tunnel and suddenly enter open spaces. This prior art proposes to provide the lateral walls with images reducing the effect of the tunnel sight by having different trapezoidal images depicted at the walls. However, because of

the purpose of these images the effect obtained is a three-dimensional effect of niches. However, such images depicted at a plane printing carrier is not suited for other purposes such as advertising on a plane field for a sporting event.

It is the purpose of the present invention to provide a figurative print which is applied to a plane print carrier so that the print appears in the best possible way for a chosen viewer but by maintaining the appearance of the print constituting a part of surroundings of other viewers.

This purpose is achieved with a figurative print which is peculiar in that the advertisement print comprises a secondary figurative element depicting the advertisement in a third dimension, that the secondary figurative element when seen in a direction perpendicular to the plane print carrier constitutes an angle $\alpha+\beta$ between the first dimension and the third dimension and an angle $\beta+90°$ between the second dimension and the third dimension and which secondary figurative element when seen in the given oblique direction between the viewer and the print shows the third dimension as directed perpendicular to the plane of advertisement being formed by the first and the second dimension and that the angles α, β are different from 0°.

The oblique viewing of the print may correspond to an angle at which a TV camera is placed as compared to a perpendicular viewing of the print. The oblique viewing of the print may also correspond to an angle that e.g. car drivers on a road pass as seen in relation to a viewing of the print being parallel with the print carrier and perpendicular to a base line. The oblique viewing of the print may be any angle so that the print appears in the best possible way before a viewer in a given position relative to the print, i.e. corresponding to a perpendicular view facing the viewer in question.

By imparting a secondary figurative element to the print it is possible on a plane print carrier to achieve a three-dimensional effect of the print for the viewer in question. As the primary figurative element, the secondary figurative element is subjected to an angular displacement which on a plane print carrier results in a three-dimensional effect that is the best possible for the viewer in question, i.e. a three-dimensional effect corresponding to a perpendicular viewing of the print.

A secondary figurative element may be a shadow effect, a relief effect or another three-dimensional effect of the primary figurative element.

In an alternative embodiment of the figurative print according to the invention, the print is peculiar in that the print comprises a tertiary figurative element depicting surroundings of the primary and secondary figurative element, that the tertiary figurative element as seen in a direction perpendicular to the plane print carrier is applied with an angular displacement δ of the figurative element, and that the angular displacement δ is equal to an angle between a view of the print being parallel with the print carrier and being perpendicular to the base line and an oblique view of the print relative to the said view of the print.

The tertiary figurative element may comprise a foreground, a background or a frame.

The print according to the invention may be applied directly to the plane print carrier by spraying ink on the plane print carrier or in another way. The print according to the invention may also be applied to the plane print carrier by making the print on a carrying medium like a paper web, and that the carrying medium subsequently is applied to the plane print carrier, e.g. by pasting.

Case 1:16-cv-20245-UU Document 1-1 Entered on FLSD Docket 01/27/2016 Page 22 of 30

DESCRIPTION OF THE DRAWING

The invention will be described in the following with reference to the attached drawing, in which

FIG. **1** is a perspective view of a best possible viewing of the print according to the invention,

FIG. **2** is a perspective view of a very inferior viewing of the print according to the invention,

FIG. **3** is a plane view of a print according to the invention.

FIG. **1** shows how a print according to the invention will be viewed by a viewer that is positioned in the best possible way for viewing the print. The print shows the mark Kvickly, which in Denmark is a tradename for conveniences sold by Fællesforeningen for Danmarks Brugsforeninger, the Danish Co-operative Wholesale Society. The print is illustrated in a situation, where the print is applied to a football field behind a football goal.

The print consists of a first figurative element which is toned grey and which constitutes the word part, Kvickly, a secondary figurative element which is black and which gives a depth of the word part, Kvickly, and a tertiary figurative element which is white and which constitutes a background for the primary and the secondary figurative element.

The print is applied with angular displacements relative to a perpendicular view of the primary and the secondary figurative element so that the primary figurative element and the secondary figurative element in combination cause the mark Kvickly to appear as standing up perpendicularly on the football field and with a depth perpendicular to a back line behind the football goal. The primary figurative element forms what may be called a plane of advertisement and the secondary figurative element forms a shadow or a relief of the primary figurative element. The print is applied with angular displacements relative to a perpendicular view of the tertiary figurative element so that the background appears plane with the football field and rectangularly with sides that are perpendicular and parallel, respectively, with the back line behind the football goal.

FIG. **2** shows how a print according to the invention will be viewed by a viewer who is positioned very inferiorly in relation to a viewing of the print. It appears that the print does not achieve the same effect as if viewed from a position corresponding to FIG. **1**. Viewing as in FIG. **2** is actually worse than viewing of a print that is plane with the football field, and which is depicted as viewed perpendicularly and seen perpendicularly on the football field. The print according to the invention is, however, intended to be viewed by a viewer in a given position in relation to the print, which position is different from the position in FIG. **2** and equal to the position in FIG. **1**.

The print according to the invention is therefore intended to make allowance for a viewer viewing the print from a given position relative to the print which is an oblique viewing of the print compared to the perpendicular viewing of the print. The print may thus be indented to make allowance for a television viewer of a football match viewing the print from a position of a TV camera or to make allowance for a car driver in front of a company domicile viewing the print from a position on a road.

FIG. **3** shows a plane view of the print as it appears when the print is viewed perpendicularly and seen perpendicularly on the plane of the paper. The print comprises a primary figurative element, which for the purpose of illustration in the first big K of Kvickly is roughly hatched, i.e. less densely hatched, a secondary figurative element, which for the purpose of illustration in the first K of Kvickly is finely hatched, i.e. more densely hatched, and a tertiary figurative element forming a parallelogram that in the shown view is not hatched at all.

The first figurative element gives the advertisement print a first dimension A and a second dimension B. An angle between the first dimension A and the second dimension B is constituted by adding an angle α, which in the shown view is about 35° with a right angle being 90°.

The secondary figurative element gives the advertisement print a third dimension C. An angle between the first dimension of the primary figurative element and the third dimension of the secondary figurative element is constituted by adding to the angle α and angle β, which in the shown view is about 20°. An angle between the second dimension of the primary figurative element and the third dimension of the secondary figurative element is constituted by adding to a right angle being 90° the angle β.

The tertiary figurative element forms surroundings of the primary and the secondary figurative element. An angle between the first dimension A of the primary figurative element and the sideways dimension D of the tertiary figurative element is constituted by subtracting from a right angle being 90° the angle α. The second dimension B of the primary figurative element and the sideways dimension D of the tertiary figurative element are parallel. An angle between the third dimension C of the secondary figurative element and a backwards/forwards dimension E of the tertiary figurative element is constituted by subtracting from the angle β and angle δ which in the shown view is about 5°.

The angles α, β, and δ may vary arbitrarily between 0° and 90°. It depends completely on the position of the viewer in relation to the position of the print on the plane print carrier. The plane print carrier to which the figurative print is applied may be a ground surface such as a lawn, a road way like a parking lot, a house front like a company domicile, a transport means like a bus, or even further applications.

It will be possible to use print according to the invention consisting of a number of the primary, secondary and tertiary figurative elements.

The invention claimed is:

1. A method of:

providing an image to be viewed, whereby said image has first, second and third orthogonal directions;

reconfiguring said image to a planar image whereby said first orthogonal direction and said second orthogonal direction form an angle of 90 degrees minus a first predetermined non-zero angle and whereby said second orthogonal direction and said third orthogonal direction form an angle of 90 degrees plus a second predetermined non-zero angle;

placing said reconfigured planar image at a given angle with respect to a viewer whereby said image appears to the viewer to protrude from said reconfigured planar image and have said first, second and third orthogonal directions, wherein the first and second orthogonal directions form a plane different from the plane of said planar image; and

wherein said image comprises a primary figurative element and a secondary figurative element, wherein said secondary figurative element depicts a third dimension of said image.

2. The method of claim **1** wherein said secondary figurative element is chosen from the group consisting of a shadow and a relief.

3. The method of claim 1 wherein said image further comprises a tertiary element which provides an element chosen from the group consisting of a foreground, background and frame.

4. The method of claim 3 wherein said first and second predetermined angles are less than ninety degrees.

5. The method of claim 1, wherein the planar image is made of a curable, liquid printing ink, that the ink is applied to a planar print carrier in a liquid state, and that the ink is cured on the planar print carrier.

6. The method of claim 1, wherein the planar image is made by printing on a carrying medium and that the carrying medium is laid on a planar print carrier.

7. The method of claim 6, wherein the planar print carrier is a ground surface.

8. The method of claim 6, wherein the planar print carrier is a vertical surface.

9. The method of claim 1 wherein said reconfigured planar image is horizontal and placing said reconfigured planar image at a given angle with respect to a viewer whereby said image appears to the viewer to protrude vertically from said reconfigured planar image.

10. The method of claim 1 wherein placing said reconfigured planar image at a given angle with respect to a viewer whereby said image appears to the viewer to protrude perpendicularly from said reconfigured planar image.

* * * * *

US008261475B1

(12) United States Patent
Thomsen

(10) Patent No.: US 8,261,475 B1
(45) Date of Patent: Sep. 11, 2012

(54) **FIGURATIVE PRINT ON A PLANE PRINT CARRIER AND USE OF SUCH FIGURATIVE PRINT**

(76) Inventor: **Erik Brogaard Thomsen**, Vejle (DK)

(*) Notice: Subject to any disclaimer, the term of this patent is extended or adjusted under 35 U.S.C. 154(b) by 1076 days.

(21) Appl. No.: **09/381,771**

(22) PCT Filed: **Mar. 25, 1998**

(86) PCT No.: **PCT/DK98/00119**

§ 371 (c)(1),
(2), (4) Date: **Oct. 26, 1999**

(87) PCT Pub. No.: **WO98/43231**

PCT Pub. Date: **Oct. 1, 1998**

(30) **Foreign Application Priority Data**

Mar. 25, 1997 (DK) ..... 9700140 U

(51) **Int. Cl.**
G09F 7/00 (2006.01)

(52) **U.S. Cl.** **40/596**

(58) **Field of Classification Search** 40/427, 40/615, 596, 624; 283/86; 345/144, 471, 345/467, 469

See application file for complete search history.

(56) **References Cited**

U.S. PATENT DOCUMENTS

1,592,034	A *	7/1926	Macy	
3,249,994	A *	5/1966	Hill	29/460
3,675,355	A *	7/1972	Shanok et al.	40/596
4,450,640	A *	5/1984	Shapiro et al.	40/596
4,667,236	A	5/1987	Dresdner	358/160
4,956,706	A	9/1990	Ohba	358/93
5,421,583	A *	6/1995	Gluck	40/160
5,941,002	A *	8/1999	Rusin	40/606

FOREIGN PATENT DOCUMENTS

DE	4214819		10/1992
FR	2608788		12/1986
GB	2315794	A *	2/1998
WO	9304559		3/1993

OTHER PUBLICATIONS

Fontworks, Sanity copywritten 1997 Dan Redding & Blue Knot Software.*

Anamorphoses chasse a travers les collections due musee, Musee des Arts Decoratifs Paris, 27 fevrier-9 mai 1976.

Gobes Handbuch der Mathematik; 950 Textabbildungen, davon uber 700 mehrfarbig, und 72 Bildtafeln, Buch Und Zeit Verlagsges. M.B. H. Koln 1967.

* cited by examiner

Primary Examiner — Joanne Silbermann
(74) *Attorney, Agent, or Firm* — McCarter & English, LLP

(57) **ABSTRACT**

The invention relates to a figurative print for a plane print carrier. In a preferred embodiment, the figurative print comprises a primary, a secondary, and a tertiary figurative element. Each of the three elements shows an angular displacement of between 0° and 90° in relation to a perpendicular view of the figurative print on the plane print carrier so that the figurative print appears with a special effect, when the print is viewed from an oblique position relative to a perpendicular viewing.

10 Claims, 3 Drawing Sheets

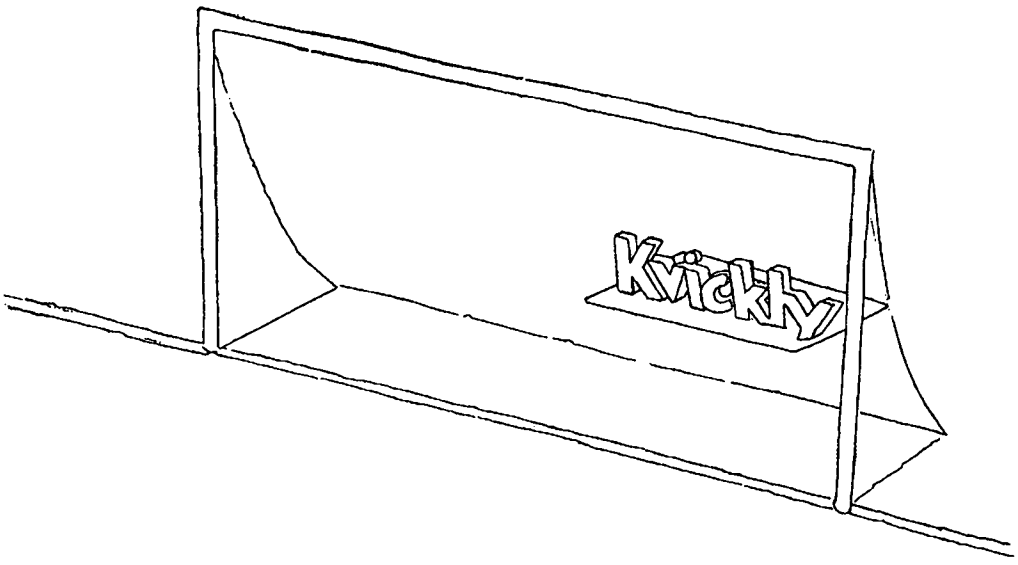

Case 2:15-cv-04865-GJP Document 1 Filed 08/27/15 Page 25 of 30

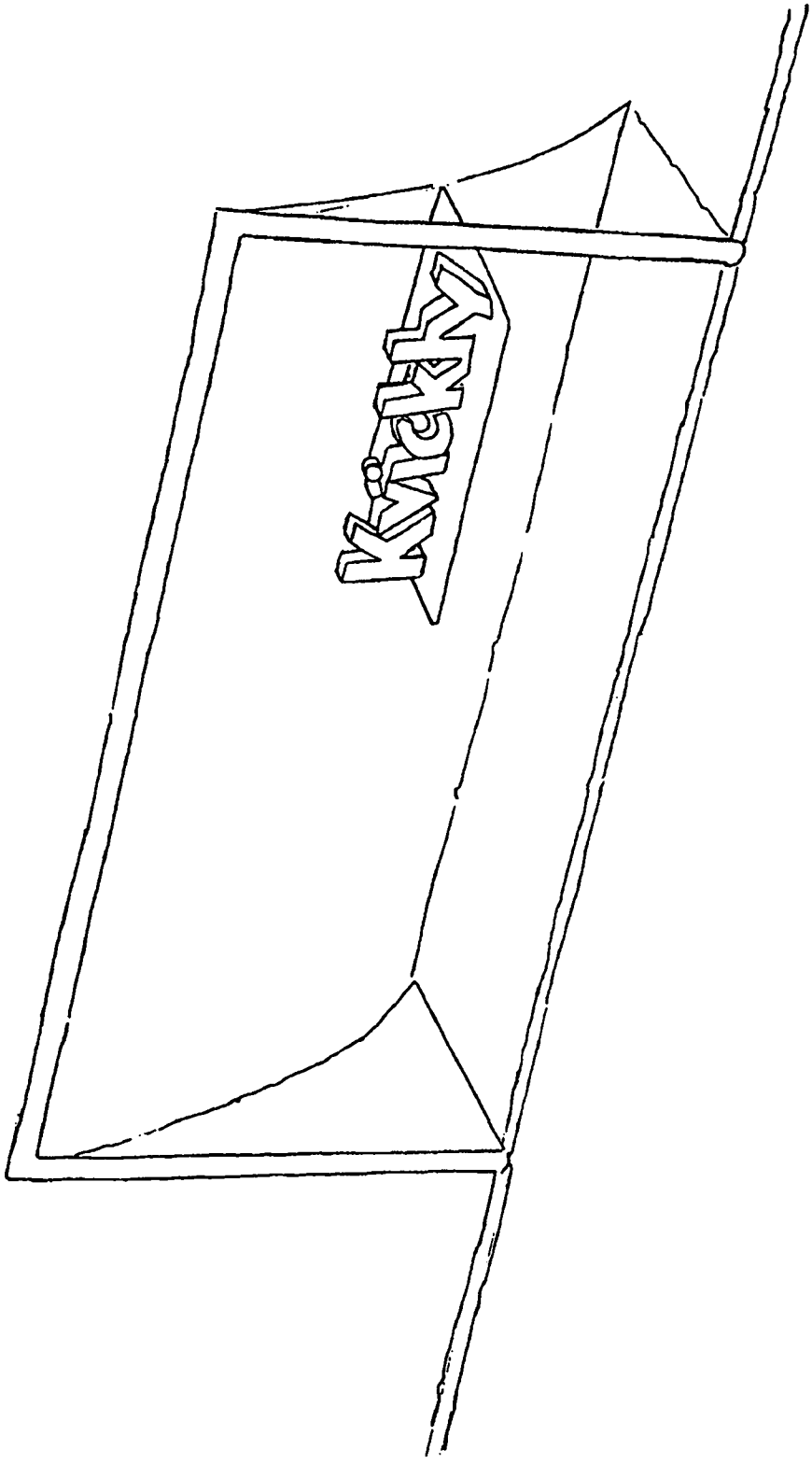

FIG. 1

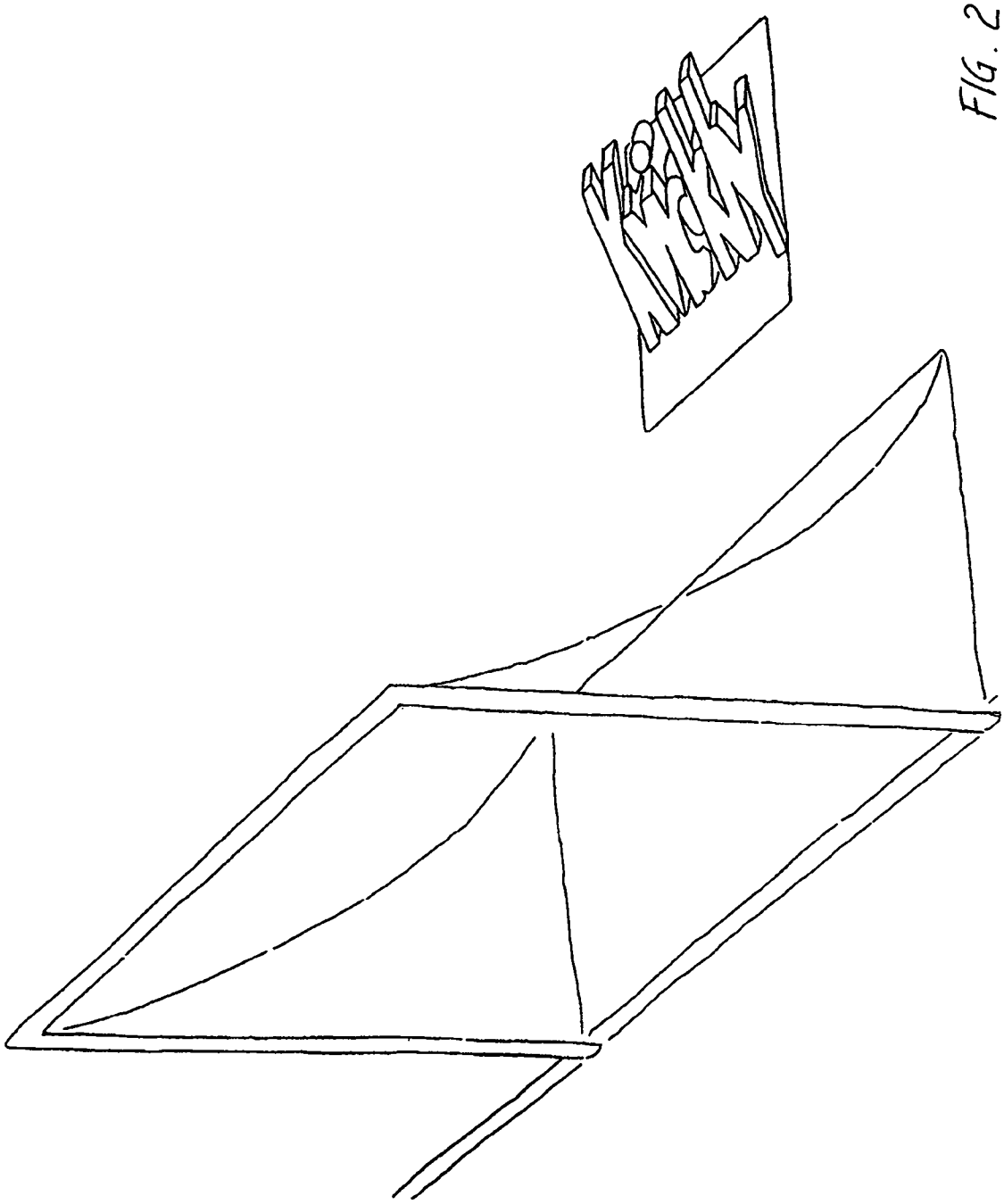

FIG. 2

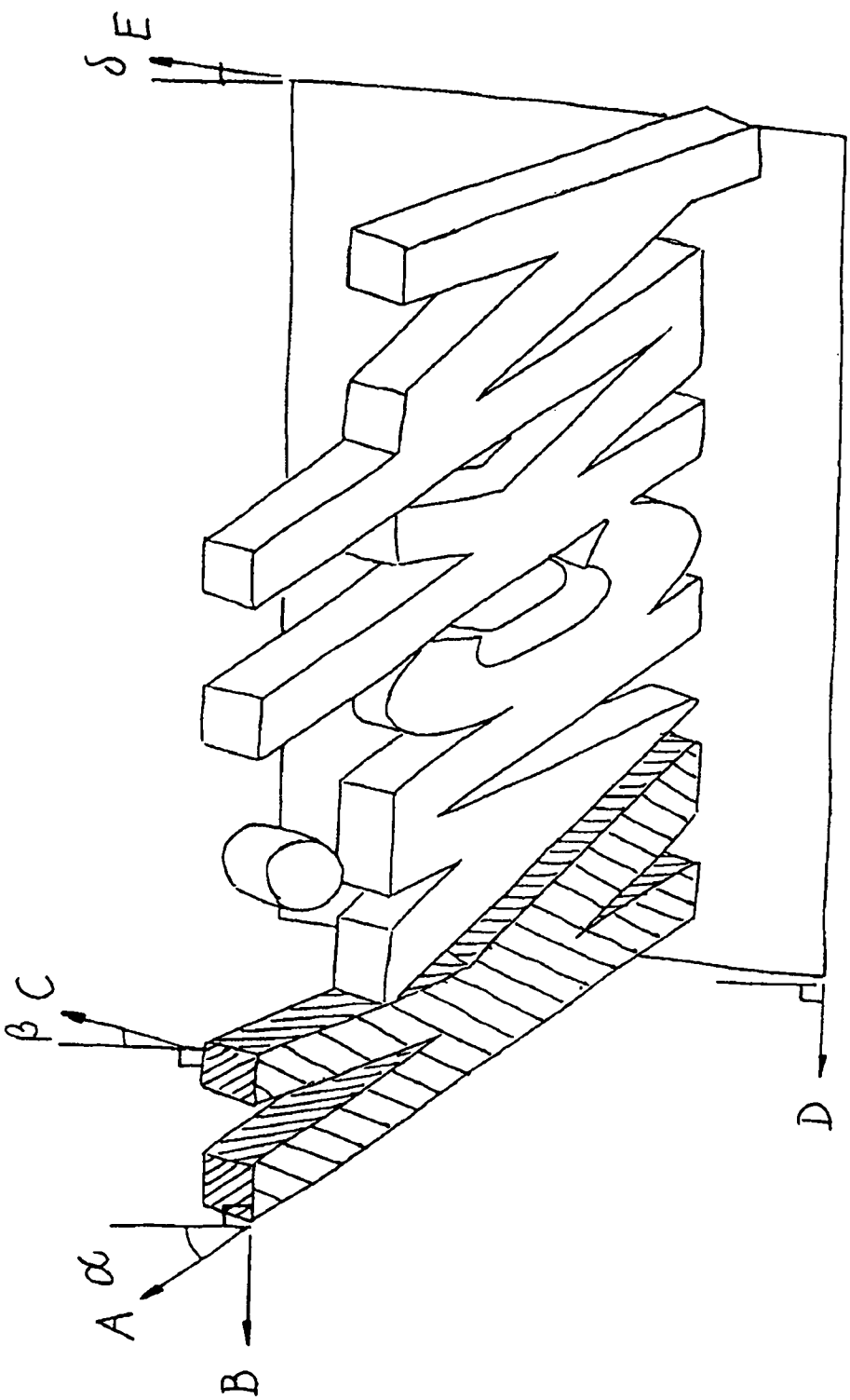

FIG. 3

FIGURATIVE PRINT ON A PLANE PRINT CARRIER AND USE OF SUCH FIGURATIVE PRINT

BACKGROUND OF THE INVENTION

The present invention relates to an advertisement print being printed on a plane print carrier, and which print is plane and lies in the same plane as the print carrier and comprises a primary figurative element depicting an advertisement in a first dimension and a second dimension, which primary figurative element when seen in a direction perpendicular to the plane of the print carrier constitutes an angle $\alpha+90°$ between the first dimension and the second dimension, and which primary figurative element when seen in a given oblique direction between a viewer and the print shows the first dimension and the second dimension as forming a plane of advertisement, which plane of advertisement is directed obliquely outwards of, preferably perpendicular to, the plane of the print carrier.

It is known to apply a figurative print, like an advertising print, on a plane print carrier, like a football field. The print is depicted in two dimensions, like the print will normally appear on a plane print carrier. Thus, the print is intended to be viewed perpendicularly to the plane print carrier such as a lawn. Especially in connection with football fields, this is an advantage so that many of the spectators at the football match may see the advertising print. However, it is a drawback that a spectator like a television viewer of a television transmitted football match does not get the full benefit from the advertising value of the advertising print, as a given TV camera is not necessarily placed and views the advertising print in such a way that the advertising print appears in the best possible way for a television viewer.

WO 93/04559 describes an image depicted on as example a playing field for a sporting event. The image is depicted in a so-called inverse perspective form resulting in that when a viewer from a selected spot outside the playing field views the inverse perspective formed image, then the image appears as a plane image having a line of sight corresponding to the line of sight of the viewer. In other words the line of sight of the inverse perspective formed image appears as a line of sight perpendicular to the inverse perspective formed image and this line perpendicular to the image corresponds to the line of sight of a viewer. However, this kind of depiction involves the problem that the image does not appear to be part of the surroundings of the playing field and thus the image is confusing to view when the viewer at the same time views the sporting event at the playing field. The viewer will not be able to view the sporting event without being confused by the inversed perspective formed image because this image has a line of sight corresponding to the line of sight of the viewer but the sporting event and the surroundings of the playing field is, of course, not only arranged for the purpose of the selected viewer in question but of course arranged for the purpose of all the other spectators watching the sporting event at the playing field. The line of sight of the other spectators is different than the one and only selected viewer for which the inverse perspective formed image is made.

DE-42 14 819 describes a depiction at the inside lateral walls of a tunnel. The purpose of such a depiction is to limit the effect of the so-called "tunnel sight" which may appear in long tunnels and can have dangerous effect to traffic when the drivers leave the tunnel and suddenly enter open spaces. This prior art proposes to provide the lateral walls with images reducing the effect of the tunnel sight by having different trapezoidal images depicted at the walls. However, because of

the purpose of these images the effect obtained is a three-dimensional effect of niches. However, such images depicted at a plane printing carrier is not suited for other purposes such as advertising on a plane field for a sporting event.

It is the purpose of the present invention to provide a figurative print which is applied to a plane print carrier so that the print appears in the best possible way for a chosen viewer but by maintaining the appearance of the print constituting a part of surroundings of other viewers.

This purpose is achieved with a figurative print which is peculiar in that the advertisement print comprises a secondary figurative element depicting the advertisement in a third dimension, that the secondary figurative element when seen in a direction perpendicular to the plane print carrier constitutes an angle $\alpha+\beta$ between the first dimension and the third dimension and an angle $\beta+90°$ between the second dimension and the third dimension and which secondary figurative element when seen in the given oblique direction between the viewer and the print shows the third dimension as directed perpendicular to the plane of advertisement being formed by the first and the second dimension and that the angles α, β are different from 0°.

The oblique viewing of the print may correspond to an angle at which a TV camera is placed as compared to a perpendicular viewing of the print. The oblique viewing of the print may also correspond to an angle that e.g. car drivers on a road pass as seen in relation to a viewing of the print being parallel with the print carrier and perpendicular to a base line. The oblique viewing of the print may be any angle so that the print appears in the best possible way before a viewer in a given position relative to the print, i.e. corresponding to a perpendicular view facing the viewer in question.

By imparting a secondary figurative element to the print it is possible on a plane print carrier to achieve a three-dimensional effect of the print for the viewer in question. As the primary figurative element, the secondary figurative element is subjected to an angular displacement which on a plane print carrier results in a three-dimensional effect that is the best possible for the viewer in question, i.e. a three-dimensional effect corresponding to a perpendicular viewing of the print.

A secondary figurative element may be a shadow effect, a relief effect or another three-dimensional effect of the primary figurative element.

In an alternative embodiment of the figurative print according to the invention, the print is peculiar in that the print comprises a tertiary figurative element depicting surroundings of the primary and secondary figurative element, that the tertiary figurative element as seen in a direction perpendicular to the plane print carrier is applied with an angular displacement δ of the figurative element, and that the angular displacement δ is equal to an angle between a view of the print being parallel with the print carrier and being perpendicular to the base line and an oblique view of the print relative to the said view of the print.

The tertiary figurative element may comprise a foreground, a background or a frame.

The print according to the invention may be applied directly to the plane print carrier by spraying ink on the plane print carrier or in another way. The print according to the invention may also be applied to the plane print carrier by making the print on a carrying medium like a paper web, and that the carrying medium subsequently is applied to the plane print carrier, e.g. by pasting.

DESCRIPTION OF THE DRAWING

The invention will be described in the following with reference to the attached drawing, in which

FIG. 1 is a perspective view of a best possible viewing of the print according to the invention,

FIG. 2 is a perspective view of a very inferior viewing of the print according to the invention,

FIG. 3 is a plane view of a print according to the invention.

FIG. 1 shows how a print according to the invention will be viewed by a viewer that is positioned in the best possible way for viewing the print. The print shows the mark Kvickly, which in Denmark is a tradename for conveniences sold by Fællesforeningen for Danmarks Brugsforeninger, the Danish Co-operative Wholesale Society. The print is illustrated in a situation, where the print is applied to a football field behind a football goal.

The print consists of a first figurative element which is toned grey and which constitutes the word part, Kvickly, a secondary figurative element which is black and which gives a depth of the word part, Kvickly, and a tertiary figurative element which is white and which constitutes a background for the primary and the secondary figurative element.

The print is applied with angular displacements relative to a perpendicular view of the primary and the secondary figurative element so that the primary figurative element and the secondary figurative element in combination cause the mark Kvickly to appear as standing up perpendicularly on the football field and with a depth perpendicular to a back line behind the football goal. The primary figurative element forms what may be called a plane of advertisement and the secondary figurative element forms a shadow or a relief of the primary figurative element. The print is applied with angular displacements relative to a perpendicular view of the tertiary figurative element so that the background appears plane with the football field and rectangularly with sides that are perpendicular and parallel, respectively, with the back line behind the football goal.

FIG. 2 shows how a print according to the invention will be viewed by a viewer who is positioned very inferiorly in relation to a viewing of the print. It appears that the print does not achieve the same effect as if viewed from a position corresponding to FIG. 1. Viewing as in FIG. 2 is actually worse than viewing of a print that is plane with the football field, and which is depicted as viewed perpendicularly and seen perpendicularly on the football field. The print according to the invention is, however, intended to be viewed by a viewer in a given position in relation to the print, which position is different from the position in FIG. 2 and equal to the position in FIG. 1.

The print according to the invention is therefore intended to make allowance for a viewer viewing the print from a given position relative to the print which is an oblique viewing of the print compared to the perpendicular viewing of the print. The print may thus be indented to make allowance for a television viewer of a football match viewing the print from a position of a TV camera or to make allowance for a car driver in front of a company domicile viewing the print from a position on a road.

FIG. 3 shows a plane view of the print as it appears when the print is viewed perpendicularly and seen perpendicularly on the plane of the paper. The print comprises a primary figurative element, which for the purpose of illustration in the first big K of Kvickly is roughly hatched, i.e. less densely hatched, a secondary figurative element, which for the purpose of illustration in the first K of Kvickly is finely hatched,

i.e. more densely hatched, and a tertiary figurative element forming a parallelogram that in the shown view is not hatched at all.

The first figurative element gives the advertisement print a first dimension A and a second dimension B. An angle between the first dimension A and the second dimension B is constituted by adding an angle α, which in the shown view is about 35° with a right angle being 90°.

The secondary figurative element gives the advertisement print a third dimension C. An angle between the first dimension of the primary figurative element and the third dimension of the secondary figurative element is constituted by adding to the angle α and angle β, which in the shown view is about 20°. An angle between the second dimension of the primary figurative element and the third dimension of the secondary figurative element is constituted by adding to a right angle being 90° the angle β.

The tertiary figurative element forms surroundings of the primary and the secondary figurative element. An angle between the first dimension A of the primary figurative element and the sideways dimension D of the tertiary figurative element is constituted by subtracting from a right angle being 90° the angle α. The second dimension B of the primary figurative element and the sideways dimension D of the tertiary figurative element are parallel. An angle between the third dimension C of the secondary figurative element and a backwards/forwards dimension E of the tertiary figurative element is constituted by subtracting from the angle β and angle δ which in the shown view is about 5°.

The angles α, β, and δ may vary arbitrarily between 0° and 90°. It depends completely on the position of the viewer in relation to the position of the print on the plane print carrier. The plane print carrier to which the figurative print is applied may be a ground surface such as a lawn, a road way like a parking lot, a house front like a company domicile, a transport means like a bus, or even further applications.

It will be possible to use print according to the invention consisting of a number of the primary, secondary and tertiary figurative elements.

The invention claimed is:

1. A method of:

providing an image to be viewed, whereby said image has first, second and third orthogonal directions;

reconfiguring said image to a planar image whereby said first orthogonal direction and said second orthogonal direction form an angle of 90 degrees minus a first predetermined non-zero angle and whereby said second orthogonal direction and said third orthogonal direction form an angle of 90 degrees plus a second predetermined non-zero angle;

placing said reconfigured planar image at a given angle with respect to a viewer whereby said image appears to the viewer to protrude from said reconfigured planar image and have said first, second and third orthogonal directions, wherein the first and second orthogonal directions form a plane different from the plane of said planar image; and

wherein said image comprises a primary figurative element and a secondary figurative element, wherein said secondary figurative element depicts a third dimension of said image.

2. The method of claim 1 wherein said secondary figurative element is chosen from the group consisting of a shadow and a relief.

3. The method of claim 1 wherein said image further comprises a tertiary element which provides an element chosen from the group consisting of a foreground, background and frame.

4. The method of claim 3 wherein said first and second predetermined angles are less than ninety degrees.

5. The method of claim 1, wherein the planar image is made of a curable, liquid printing ink, that the ink is applied to a planar print carrier in a liquid state, and that the ink is cured on the planar print carrier.

6. The method of claim 1, wherein the planar image is made by printing on a carrying medium and that the carrying medium is laid on a planar print carrier.

7. The method of claim 6, wherein the planar print carrier is a ground surface.

8. The method of claim 6, wherein the planar print carrier is a vertical surface.

9. The method of claim 1 wherein said reconfigured planar image is horizontal and placing said reconfigured planar image at a given angle with respect to a viewer whereby said image appears to the viewer to protrude vertically from said reconfigured planar image.

10. The method of claim 1 wherein placing said reconfigured planar image at a given angle with respect to a viewer whereby said image appears to the viewer to protrude perpendicularly from said reconfigured planar image.

* * * * *