REC'D BY _____ D.C.
DEC 29 2015
STEVEN M. LARIMORE
CLERK U.S. DIST. CT.
S.D. OF FLA. FT. LAUD.

KENNETH MARC, ESQ.
1000 West McNab Road
Suite 308
Pompano Beach, FL 33069
Telephone: (954) 489-0502
Fax: (954) 933-2852
Email: KenMarcPA@gmail.com
Attorney for Plaintiff

UNITED STATES DISTRICT COURT
SOUTHERN DISTRICT OF FLORIDA

TRIPLE TEE GOLF, INC., a Florida Corporation

Plaintiff,

v.

CALLAWAY GOLF COMPANY, a Delaware Corporation and CALLAWAY GOLF SALES COMPANY, a California Corporation, and JOHN DOES 1-10

Defendants

_____/

Case No.

PLAINTIFF'S COMPLAINT FOR PATENT INFRINGEMENT OF PATENT NO. 7,128,660 UNDER 35 U.S.C. §271(a); 35 U.S.C. §271(b); and 35 U.S.C. §271(c)

(DEMAND FOR JURY TRIAL)

COMES NOW Plaintiff TRIPLE TEE GOLF, INC., by and through its undersigned counsel, and hereby alleges as follows:

NATURE OF THE ACTION

1. This is a patent infringement action to stop Defendants' infringement of Plaintiff's United States Patent Nos. 7,128,660 (the '660 patent) entitled "Method of Golf Club Performance Enhancement and Articles Resultant Therefrom", copies of the '660 Patent and Certificates of Re-Examination of which are attached herewith as Exhibits A, B, and C . The inventions of said patent allow golfers to change the center

of gravity of a substantially hollow golf club head by moving selectable combinations of adjustable weights within the club head, thereby effecting different launch and flight conditions of the golf ball and its trajectory.

SUBJECT MATTER JURISDICTION AND VENUE

2. This action arises under the Patent Laws of the United States, 35 U.S.C. §§1 et seq., including 35 U.S.C. §§ 271 and 281-285.

3. This Court has jurisdiction under 28 U.S.C. §§1331 and 1338 (a), and 35 U.S.C. 271.

4. Venue is proper in this judicial district pursuant to 28 U.S.C. §1391(b)(2), §1391(c) and §1400(b) in that Plaintiff is informed and believes that Defendants regularly do business in this judicial district, and therefore are deemed to reside therein.

THE PARTIES

5. Plaintiff, TRIPLE TEE GOLF, INC. ("Plaintiff") is a Florida corporation situated in Pompano Beach, Florida 33069.

6. Plaintiff is informed and believes, and alleges on that basis, that Defendant Callaway Golf Company ("Defendant") is a Delaware corporation with its principal place of business in Carlsbad, California, 92008, and Callaway Golf Sales Company is a California corporation, also having its principal place of business in Carlsbad, California 92008. Defendants said JOHN DOES 1-10 are various distributors, retailers, agents and end users of Defendants that are resident throughout Florida and the United States. All Defendants therefore have at least minimum contacts with this District.

GENERAL ALLEGATIONS

7. The Plaintiff has previously advised Defendant Callaway Golf Company of the '660 patent which it holds, sufficiently to satisfy the notice requirements of 35 U S.C. 287(a), and by expressly offering to said Defendant a license under its '660 patent. Said Defendant has declined such a license.

8. Plaintiff is the holder of all right, title and interest to said '660 Patent ("the Patent").

9. Upon information and belief, Defendants design, assemble, market and distribute to entities that sell to the public and make, use, import, offer for sale and sell products that infringe, directly and/or indirectly, Plaintiff's Patent as re-examined on October 24, 2013 and June 12, 2014, including products that induce the infringement of the '660 patent by said JOHN DOES.

9A. The Patent, as re-examined, does not enlarge the scope of the originally issued '660 Patent or its claims. As such, under 35 U.S.C. 252, the patent remains enforceable at least from June 2014 until its expiration in 2024.

10. Plaintiff is informed and believes that Defendants and their agents have engaged in a long-standing course of dealings in supplying products to the golf industry which are sold, distributed and used in Florida and throughout the United States.

11. Plaintiff is informed and believes that the products alleged to be infringing herein were and are distributed from and into this judicial district from abroad by Defendants, and were offered for sale and sold by Defendants from this judicial district since the year 2014.

12. Plaintiff is informed and believes that Defendants are subject to personal jurisdiction of this Court under Fed. R. Civ. P. 4

13. Defendants infringements of the Patent include, but are not limited to, various models of Defendants' award winning golf drivers known as the Callaway Big Bertha and Great Big Bertha Drivers, examples of which are shown in Exhs. D and E herewith.

14. Defendants knew or should have known of Plaintiff's rights in the '660 patent, which received its second re-examination certificate on June 12, 2014. At the very least, reasonable investigation prior to 2014 would have revealed that the subject matter at issue was and is proprietary to Plaintiff.

14A. Defendants' said clubs infringe the Patent by reason of their structures which enable the end user to practice methods of modification of golf club performance to control hook and slice, launch angle, ball penetration, backspin, trajectory, and ballooning.

15. At least in light of Plaintiff's communication with Defendant Callaway Golf on September 10, 2015, its actions have been knowing and willful at least since that date.

COUNT I DIRECT PATENT INFRINGEMENT under 35 U.S.C. 271(a)

16. Plaintiff hereby incorporates the allegations of Paragraphs 1 through 15, as though fully set forth herein.

17. Plaintiff is the owner the Patent and has complied with the provisions of the United States Patent Laws at 35 U.S.C. §1 et seq. with respect to them.

18. Plaintiff has not authorized Defendants to make, use, offer for sale, sell to the public or import products infringing, directly or indirectly, Plaintiff's Patent.

19. Plaintiff is informed and believes and, based thereon, alleges that Defendants have infringed the Patent by, among other things, making, using, importing, advertising, offering for sale to the public, selling products that, when used, infringe Plaintiff's Patent as re-examined, including without limitation, said golf clubs, without Plaintiff's permission or authority, and thereby has and is directly infringing the Patent under 35 U.S.C. 271(a).

20. Plaintiff has suffered damages in an amount subject to proof at trial, but in no event less than a reasonable royalty relative to Defendants' infringing sales revenues, under 35 U.S.C. §284.

21. On information and belief, Defendants knew or should have known of Plaintiff's exclusive rights in the patented method at the time the infringing activity began, apparently in 2014. Nevertheless, Defendants proceeded to knowingly and willfully disregard Plaintiff's rights and to infringe Plaintiff's Patent. Plaintiff is therefore entitled to an amount which is treble the amount of Plaintiff's damages found or assessed.

22. Based on Defendants' willful infringement, Plaintiff believes this to be an "exceptional" case which entitles Plaintiff to attorney's fees pursuant to 35 U.S.C. §285.

23. Defendants have caused, and continue to cause, irreparable injury to Plaintiff by infringement of Plaintiff's Patent.

COUNT II (INDUCEMENT OF PATENT INFRINGEMENT UNDER 35 U.S.C. 271(b)

24 Plaintiff hereby incorporates the allegations of Paragraphs 1 through 1 and 21 above, as though fully set forth herein.

25. Plaintiff is the owner of the Patent. Plaintiff has complied with the provisions of the United States patent laws at 35 U.S.C. §1 et seq. with respect to said Patent.

26. Plaintiff has not authorized Defendants to induce others or to assist others make, use, use methods, offer for sale, sell, or import products that facilitate methods infringing Plaintiff's Patent.

27. Plaintiff is informed and believes, and based thereon, allege, that Defendants have infringed the Patent by actively inducing its agents, distributors, and end users JOHN DOES 1-10, among others, to employ products that induce infringement of the methods of Plaintiff's Patent without Plaintiff's permission or authority, in violation of 35 U.S.C. 271(b).

28. Plaintiff has suffered damages in an amount subject to proof at trial, but in no event less than a reasonable royalty under 35 U.S.C.§284 regarding revenues of Defendants' infringing sales since June 2014.

29. On information and belief, Defendants knew or should have known of Plaintiff's exclusive rights in the Patent when the infringing activity began. Nevertheless, Defendants proceeded to knowingly and willfully without regard for Plaintiff's rights, induce others downstream in commerce to directly infringe Plaintiff's patent. Plaintiff is therefore entitled to an amount up to treble

the amount of Plaintiff's damages found or assessed due to such acts and Defendants should not be allowed to take any deduction from their revenue in computing damages which should be disgorged and awarded to Plaintiff.

29A. Plaintiff is informed and believes, and based thereon alleges, that Defendants have indirectly infringed the Patent by, among other things , selling one or more articles or materials such as weight adjustment articles, booklets, videos, tools and entire clubs, which facilitate infringement of the patented methods of the Patent, especially such materials that are not staple articles of commerce, this without Plaintiff's permission or authority, in violation of 35 U.S.C. 271(b).

30. Based on Defendants' willful infringement, Plaintiff believes this to be an "exceptional" case which entitles Plaintiff to attorney's fees pursuant to 35 U.S.C. §285.

31. Defendants have caused, and continues to cause, irreparable injury to Plaintiff by inducement of others to infringe Plaintiff's patent within the contemplation of 35 U.S.C. 271(b).

COUNT III CONTRIBUTORY PATENT INFRINGEMENT UNDER 35 U.S.C. 271(c)

32. Plaintiff hereby incorporates the allegations of Paragraphs 1 through 31 above, as though fully set forth herein.

33. Plaintiff is the owner of the Patent. Plaintiff has complied with the provisions of the United States Patent Laws at 35 U.S.C. §1 et seq. with respect to the patent.

34. Plaintiff has not authorized Defendants to make, use, offer for sale, sell or import products or methods infringing Plaintiff's Patent as re-examined or to assist end users in doing so.

35. Plaintiff is informed and believes, and based thereon alleges, that Defendants have infringed the Patent by, among other things, selling one or more articles, materials such as weight adjustment articles, booklets, videos and tools, which enable infringement of the patented methods of the Patent, including materials adapted for use in the infringement of Plaintiff's Patent that are not staple articles of commerce, this without Plaintiff's permission or authority, in violation of 35 U.S.C. 271(c).

36. Plaintiff has suffered damages in an amount subject to proof at trial, but in no event less than a reasonable royalty under 35 U.S.C. §284 regarding Defendants infringing sales revenues.

37. On information and belief, Defendants knew or should have known of Plaintiff's exclusive rights in the patent at the time the infringing activity occurred. Nevertheless, Defendants proceeded knowingly and willfully in disregard of Plaintiff's rights, to contribute to the infringement by others of Plaintiff's Patent. Plaintiff is therefore entitled to an amount due to such acts up to treble the amount of Plaintiff's damages found or assessed and Defendants should not be allowed to take any deductions from their revenue in computing profits which should be disgorged and awarded to Plaintiff.

38. Based on Defendants' willful infringement, Plaintiff believes this to be an "exceptional" case which entitles Plaintiff to attorney's fees pursuant to 35 U.S.C. §285.

COUNT IV

39. Plaintiff hereby incorporates the allegations of Paragraphs 1 through 38, as though set forth fully at length herein.

41. Defendants have caused, and continue to cause, irreparable injury to Plaintiff by directly and indirectly infringing of Plaintiff's Patent and inducing their agents, including said JOHN DOES 1-10, to do so.

PRAYER FOR RELIEF

Plaintiff prays that judgment be entered in its favor and against Defendants as follows:

1. For damages in accordance with 35 U.S.C. §284, including actual damages, and in no event less than a reasonable royalty regarding Defendants' revenues and those of its agents from infringing sales revenues and of other revenue convoyed thereby, consequential of Defendants' infringements under 35 U.S.C. 271(a), (b) and/or (c) and those of their agents.

2. For an award for willful infringement of up to treble the amount of damages found and assessed under 35 U.S.C. §284;

3. That the Court find this to be an exceptional case and award Plaintiff its attorney's fees pursuant to 35 U.S.C. §285;

4. For an accounting and injunctive relief include prohibiting of future patent infringements by Defendants and their agents;

5. For interest from the date of commencement of infringement in about 2014;

6. For costs of this suit;

7. For such other and further relief as this Court deems just and equitable.

DEMAND FOR JURY TRIAL

Plaintiff, TRIPLE TEE GOLF, INC., hereby demands a trial by jury as to any issue triable of right by a jury.

Respectfully submitted,
TRIPLE TEE GOLF INC.

By: _____

Kenneth Marc, Esq.
Florida Bar No. 216143
1000 West McNab Road
Suite 308
Pompano Beach, FL 33069
Telephone: (954) 489-0502
Fax: (954) 933-2852
Email: KenMarcPA@gmail.com
Attorney for Plaintiff

Of Counsel:

MELVIN K. SILVERMAN
MELVIN K. SILVERMAN & ASSOCS., P.C.
1000 West McNab Road, Suite 308
Pompano Beach, FL 33069
Telephone: (954) 489-0502
Fax: (954) 933-2852

Attachments herewith:

1. Exh. A: U.S. Patent No. 7,128,660
2. Exh. B: Certificate of Inter-Partes Re-Examination dated October 24, 2013
3. Exh. C: Certificate of Ex-Parte Re-Examination dated June 12, 2014
4. Exh. D: Materials showing accused product of Defendants' BIG BERTHA and GREAT BIG BERTHA.

EX . A

US007128660B2

(12) **United States Patent**
Gillig

(10) **Patent No.: US 7,128,660 B2**
(45) **Date of Patent: Oct. 31, 2006**

(54) **METHOD OF GOLF CLUB PERFORMANCE ENHANCEMENT AND ARTICLES RESULTANT THEREFROM**

(75) Inventor: **John P. Gillig**, Pompano Beach, FL (US)

(73) Assignee: **Elizabeth P. Gillig Revocable Trust**, Duxbury, MA (US)

(*) Notice: Subject to any disclaimer, the term of this patent is extended or adjusted under 35 U.S.C. 154(b) by 0 days.

(21) Appl. No.: **10/818,899**

(22) Filed: **Apr. 3, 2004**

(65) **Prior Publication Data**

US 2004/0192466 A1 Sep. 30, 2004

Related U.S. Application Data

(63) Continuation-in-part of application No. 10/383,532, filed on Mar. 10, 2003, now abandoned, which is a continuation-in-part of application No. 09/849,522, filed on May 7, 2001, now Pat. No. 6,530,848.

(60) Provisional application No. 60/205,250, filed on May 19, 2000.

(51) **Int. Cl.**
A63B 53/00 (2006.01)
A63B 53/04 (2006.01)

(52) **U.S. Cl.** **473/324**; 473/409; 473/334; 473/340; 473/345

(58) **Field of Classification Search** 473/324–350, 473/290–291, 409
See application file for complete search history.

(56) **References Cited**

U.S. PATENT DOCUMENTS

3,841,640	A	10/1974	Gaulocher	
4,431,192	A *	2/1984	Stuff, Jr.	473/327
D291,465	S *	8/1987	Antonious	D21/744
4,826,172	A	5/1989	Antonious	
4,900,029	A	2/1990	Sinclair	
5,014,993	A *	5/1991	Antonious	473/350
5,058,895	A	10/1991	Igarashi	
5,297,794	A	3/1994	Lu	
5,683,307	A	11/1997	Rife	
5,916,042	A	6/1999	Reimers	
5,947,840	A	9/1999	Ryan	
D427,263	S	6/2000	Bober	
6,077,173	A *	6/2000	Stites	473/334
6,280,348	B1	8/2001	Stites	
6,309,311	B1 *	10/2001	Lu	473/332
6,530,848	B1	3/2003	Gillig	

(Continued)

FOREIGN PATENT DOCUMENTS

JP 2000-005356 1/2000

(Continued)

OTHER PUBLICATIONS

Art Chou, Peter Gilbert, and Tom Olsavsky, Clubhead Designs: How to They Affect Ball Flight, Tideist and Foot-Joy Worldwide, USA, 1995, pp. 15-24. n/a, Tideist and Foot Joy Worldwide, USA.

Primary Examiner—Sebastiano Passaniti
(74) *Attorney, Agent, or Firm*—Melvin K. Silverman; Yi Li

(57) **ABSTRACT**

The performance of a golf club may be enhanced through the provision of a void space behind a face plate and above the sole plate, to decrease club weight and provide single or combinations of selectable weighting elements within volumetric coordinates of an orthonormal matrix about the void space. The weighting coordinates are provided in response to ball strike, flight analysis and physiologic observation of the golf strike swing. Ball backspin, trajectory, penetration and hook or slice may be modified through the use of a definable weighting strategy.

19 Claims, 11 Drawing Sheets

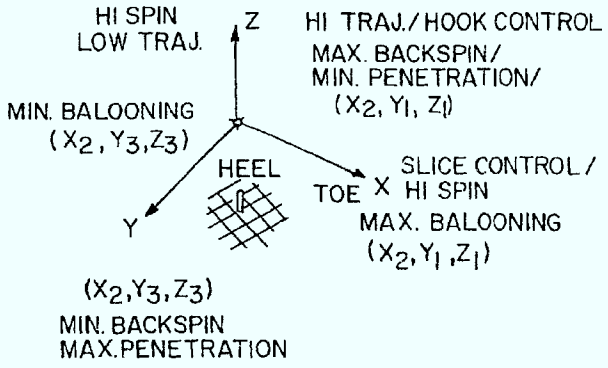

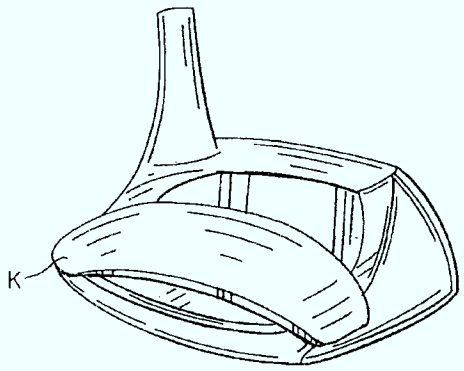

U.S. PATENT DOCUMENTS

D487,491	S	3/2004	Madore et al.
D487,492	S	3/2004	Madore et al.
D487,493	S	3/2004	Madore et al.
D488,203	S	4/2004	Madore et al.
2003/0199331	A1	10/2003	Stites, III
2004/0018890	A1	1/2004	Stites et al.
2004/0110575	A1	6/2004	Stites et al.
2005/0009625	A1	1/2005	Stiles et al.
2005/0137024	A1	6/2005	Stiles et al.

FOREIGN PATENT DOCUMENTS

JP	2000-210400	8/2000
JP	2001-079124	3/2001

* cited by examiner

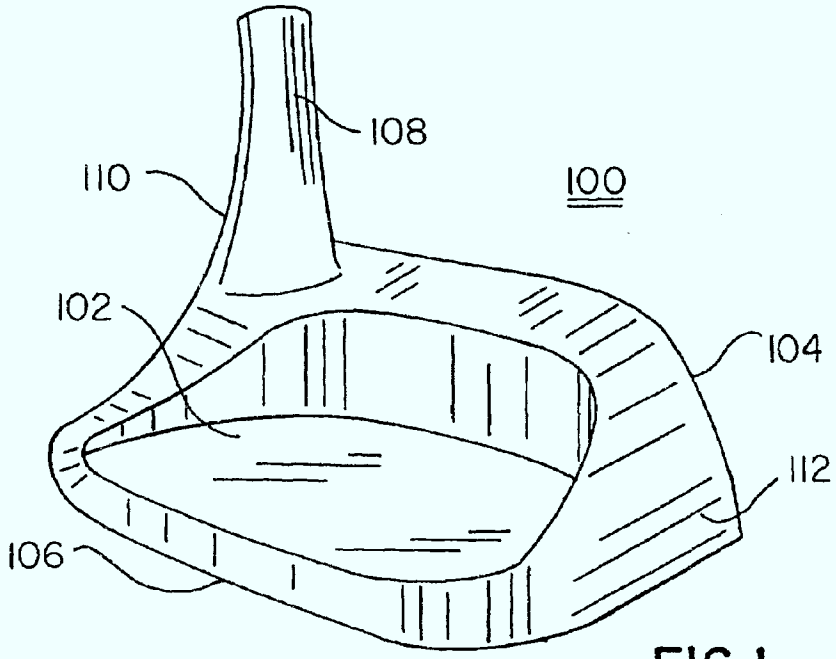

FIG. 1

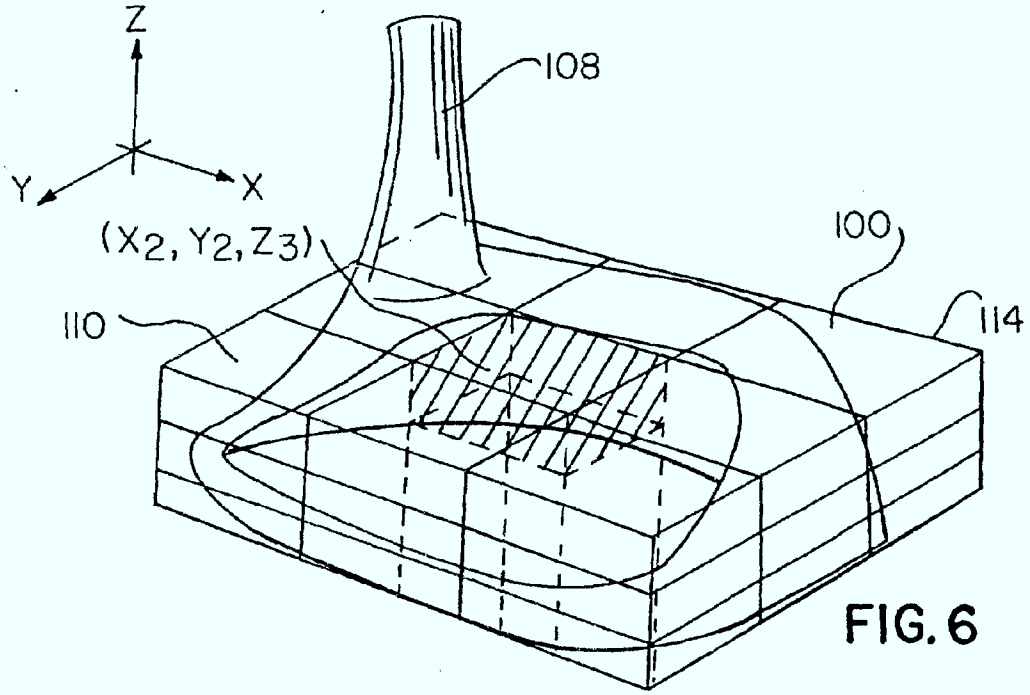

FIG. 6

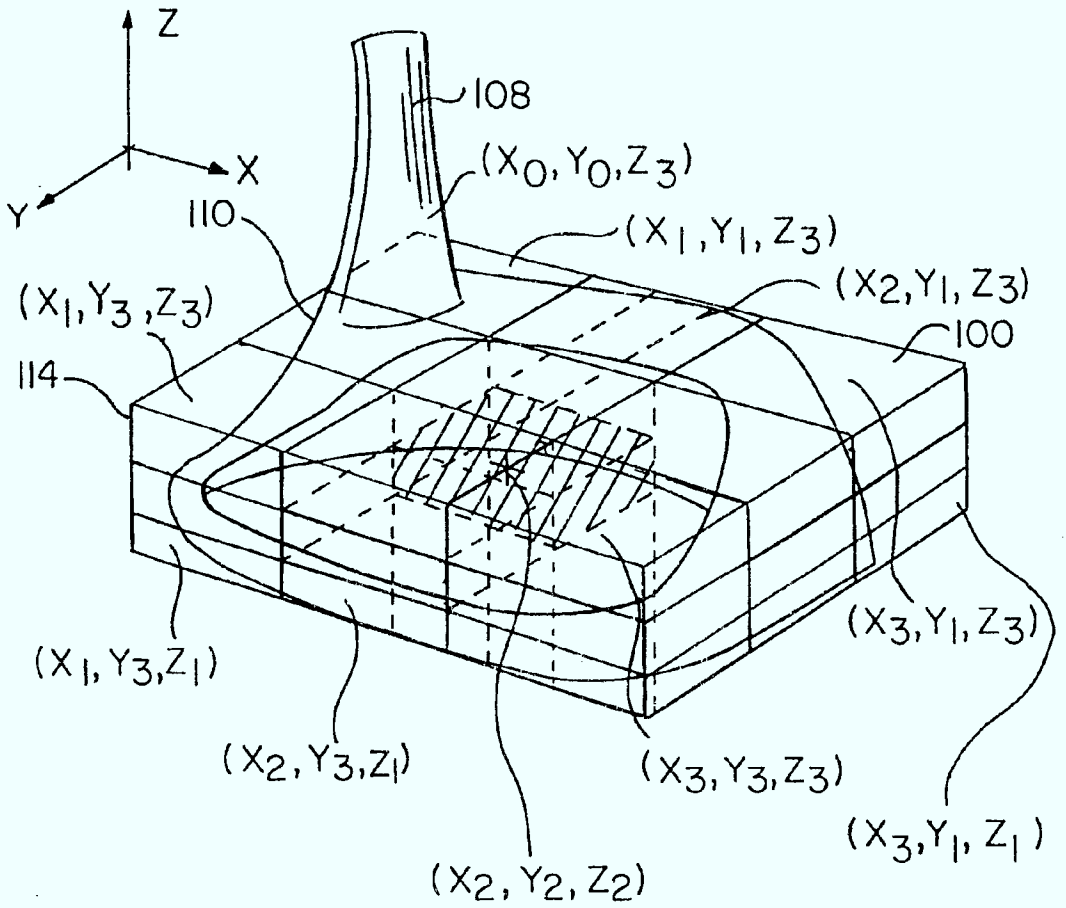
Z
X
Y
108
(X_0, Y_0, Z_3)
110
(X_1, Y_1, Z_3)
(X_2, Y_1, Z_3)
(X_1, Y_3, Z_3)
100
114
(X_3, Y_1, Z_3)
(X_1, Y_3, Z_1)
(X_2, Y_3, Z_1)
(X_3, Y_3, Z_3)
(X_3, Y_1, Z_1)
(X_2, Y_2, Z_2)

FIG. 2

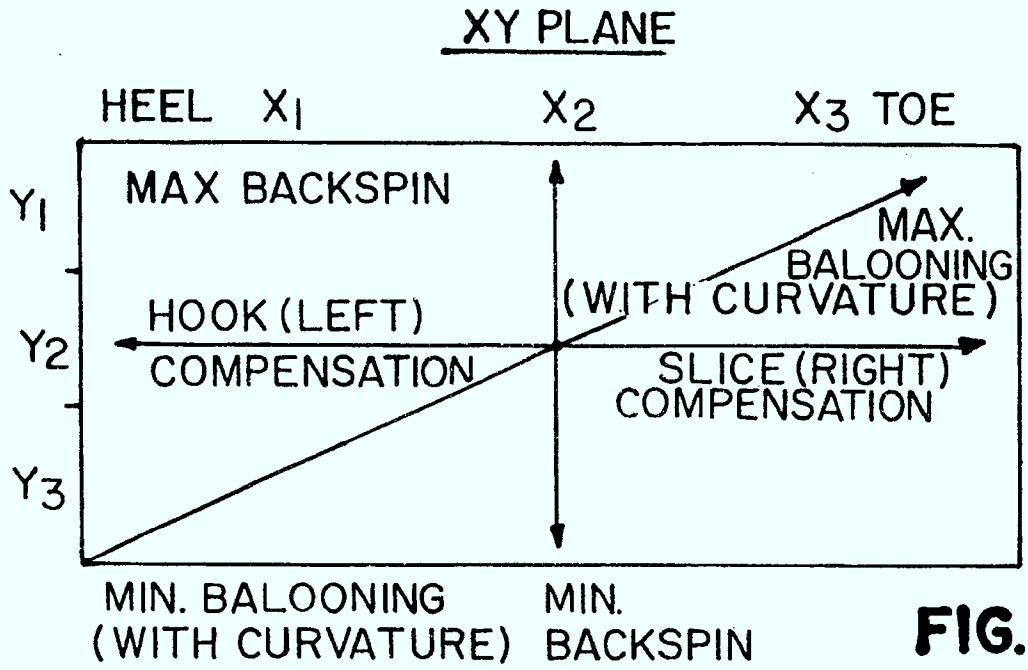
XY PLANE
HEEL X1
X2
X3 TOE
Y1
Y2
Y3
MAX BACKSPIN
MAX. BALOONING (WITH CURVATURE)
HOOK (LEFT) COMPENSATION
SLICE (RIGHT) COMPENSATION
MIN. BALOONING (WITH CURVATURE)
MIN. BACKSPIN

FIG. 3

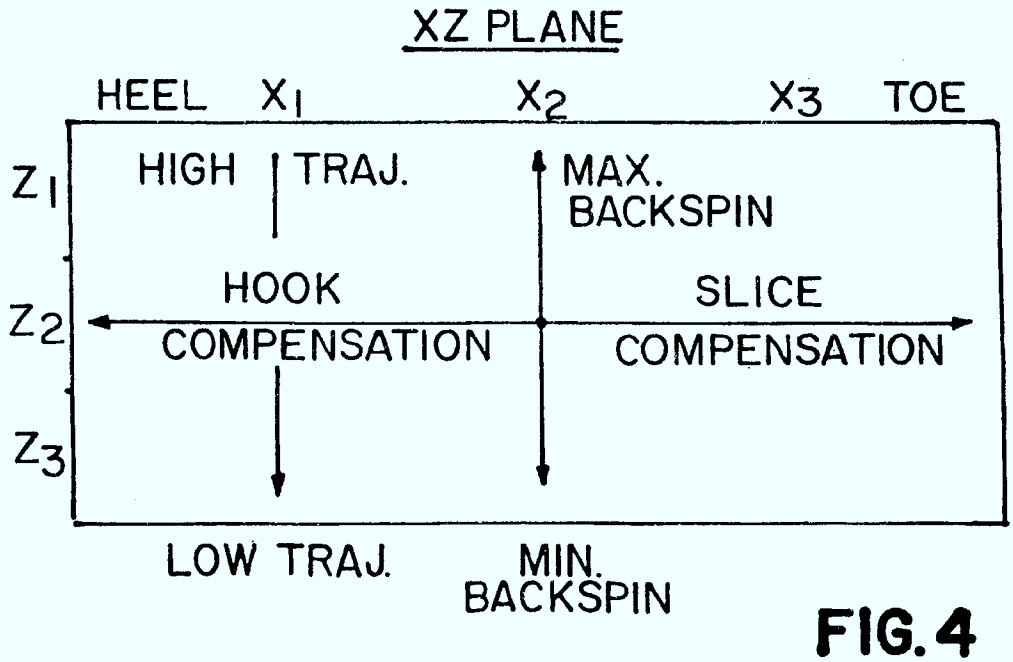
XZ PLANE
HEEL X1
X2
X3 TOE
Z1
Z2
Z3
HIGH TRAJ.
MAX. BACKSPIN
HOOK COMPENSATION
SLICE COMPENSATION
LOW TRAJ.
MIN. BACKSPIN

FIG. 4

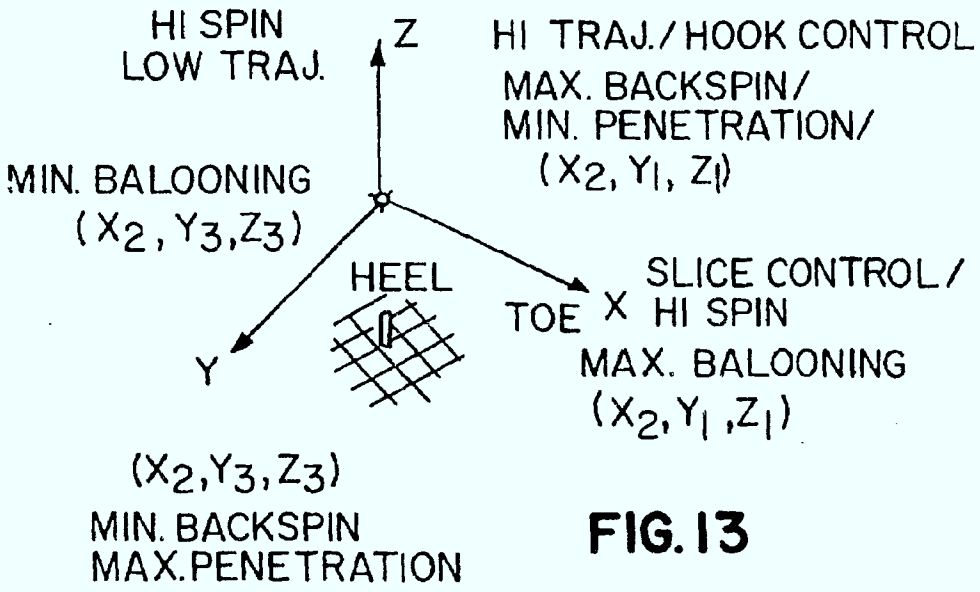
HI SPIN
LOW TRAJ.
Z
HI TRAJ./HOOK CONTROL
MAX. BACKSPIN/
MIN. PENETRATION/
(X2, Y1, Z1)
MIN. BALOONING
(X2, Y3, Z3)
HEEL
TOE
X
SLICE CONTROL/
HI SPIN
MAX. BALOONING
(X2, Y1, Z1)
Y
(X2, Y3, Z3)
MIN. BACKSPIN
MAX. PENETRATION

FIG. 13

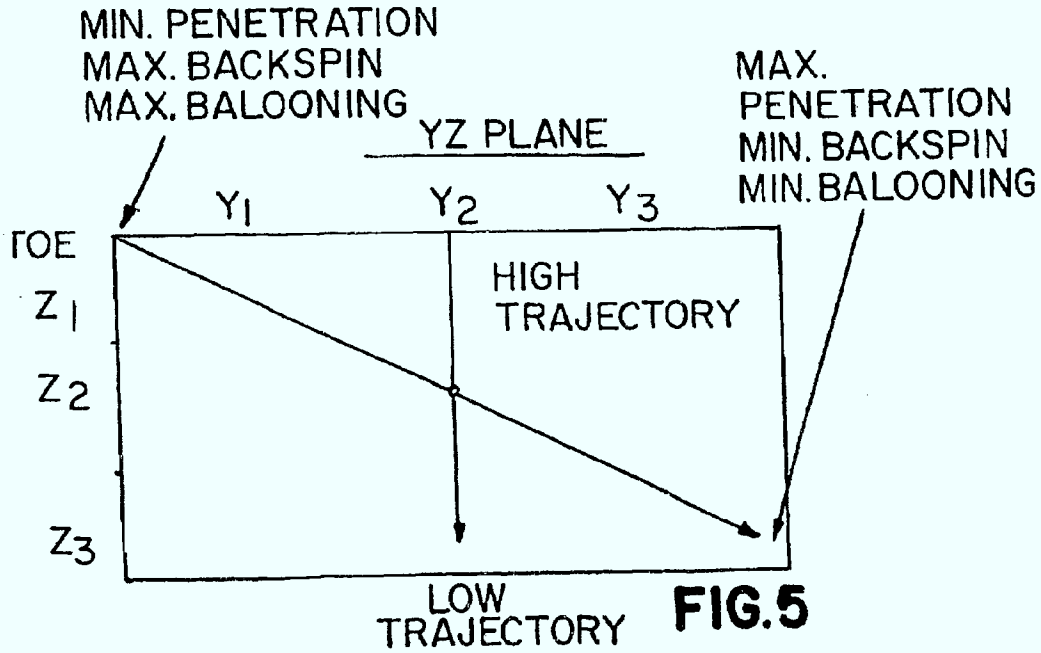
MIN. PENETRATION
MAX. BACKSPIN
MAX. BALOONING
YZ PLANE
MAX.
PENETRATION
MIN. BACKSPIN
MIN. BALOONING
Y1
Y2
Y3
TOE
Z1
Z2
Z3
HIGH
TRAJECTORY
LOW
TRAJECTORY

FIG. 5

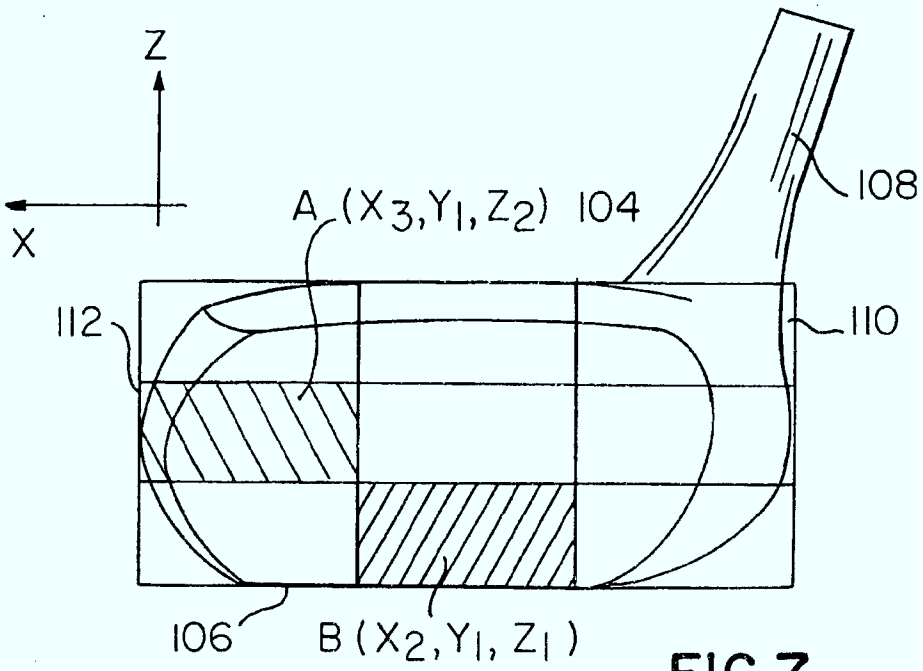

FIG. 7

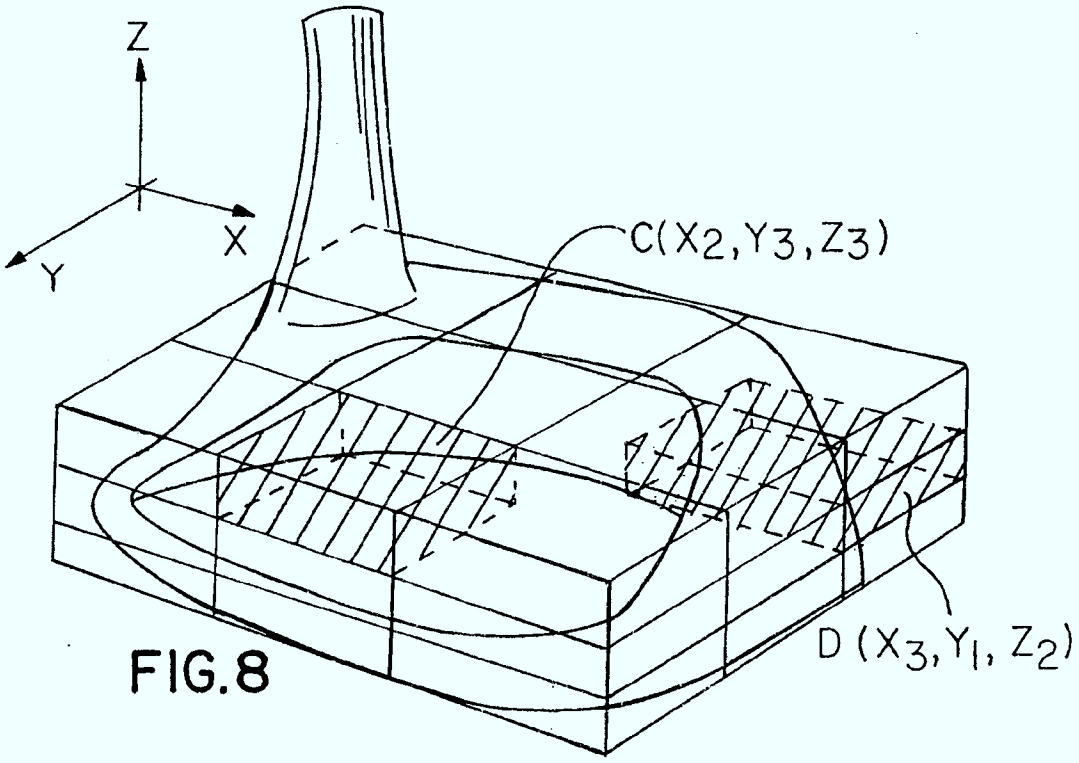

FIG. 8

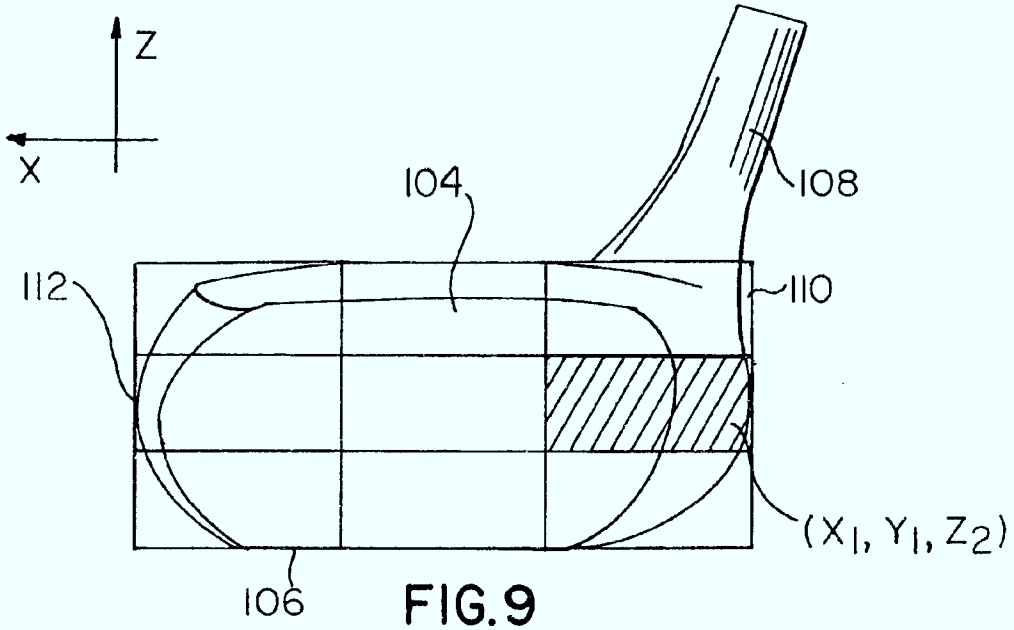

FIG.9

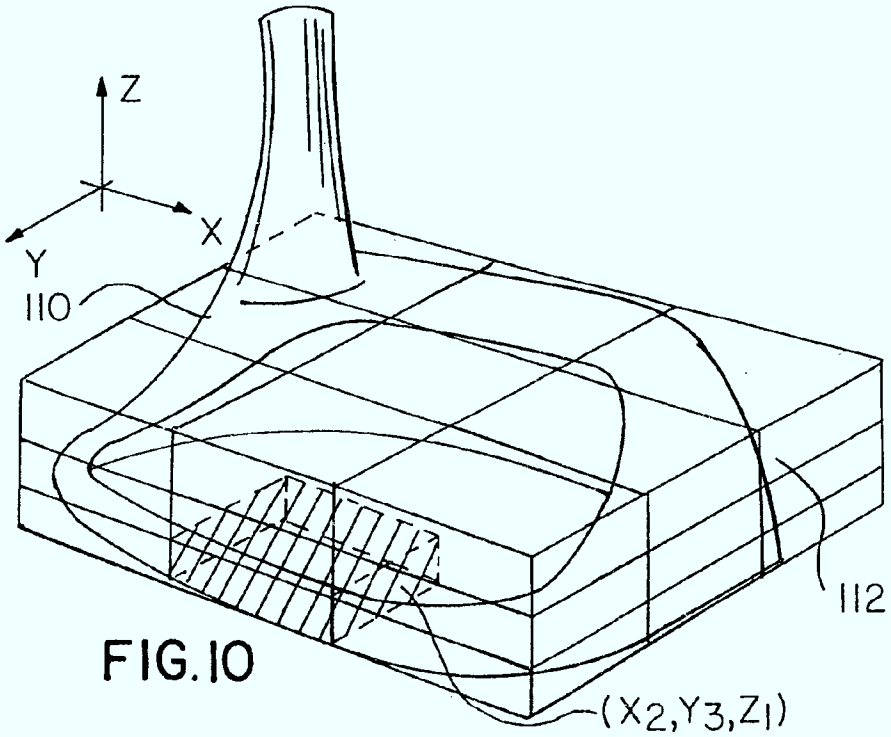

FIG.10

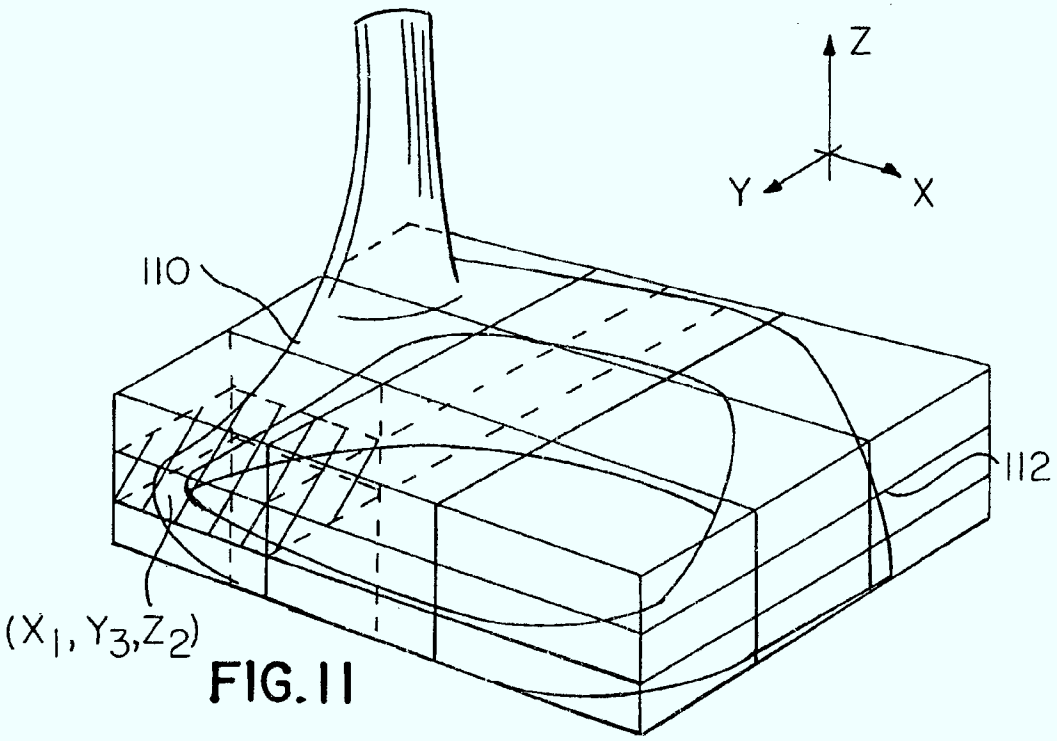

FIG. 11

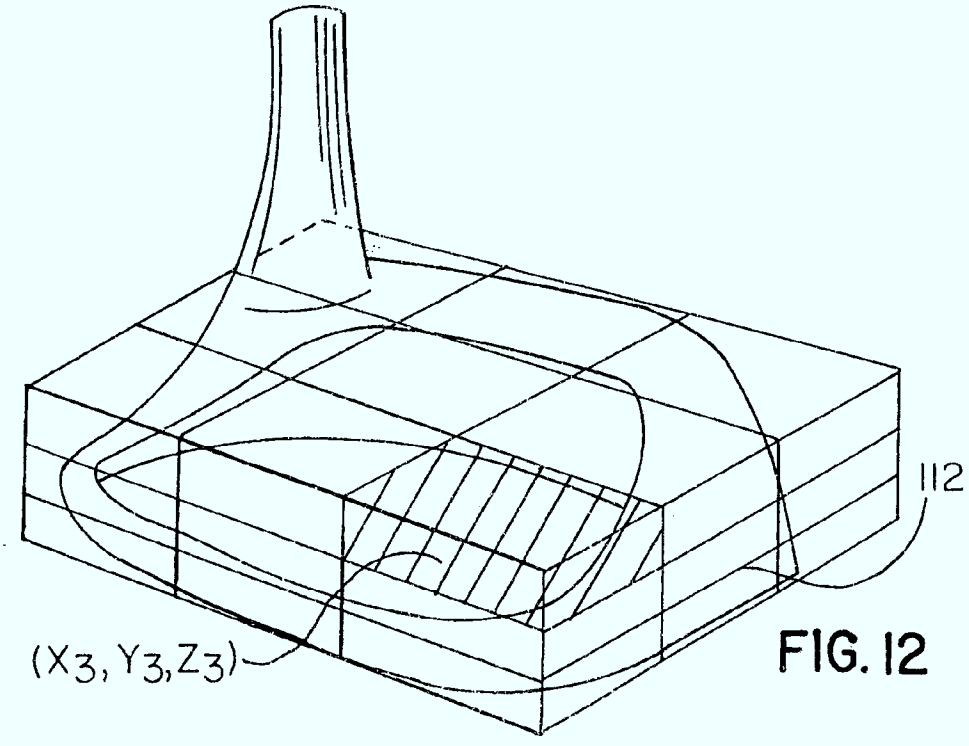

FIG. 12

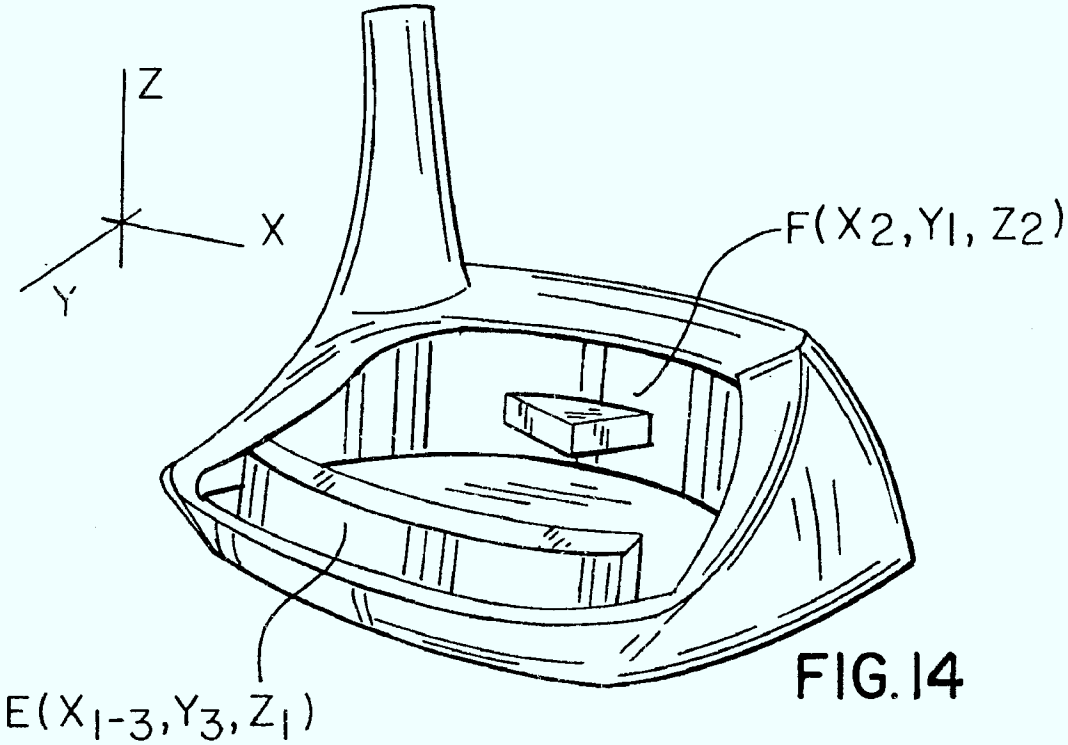

FIG. 14

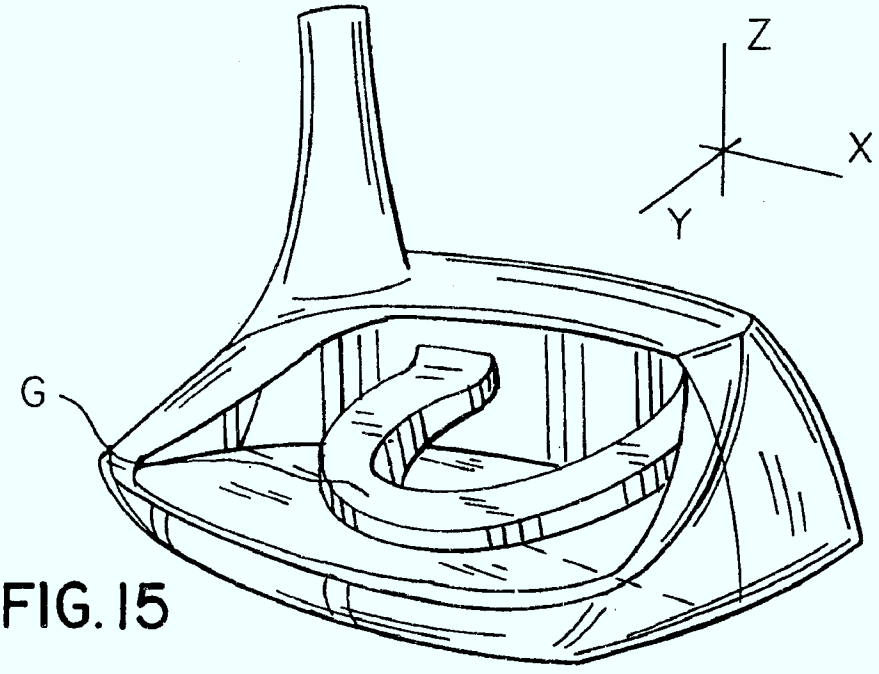

FIG. 15

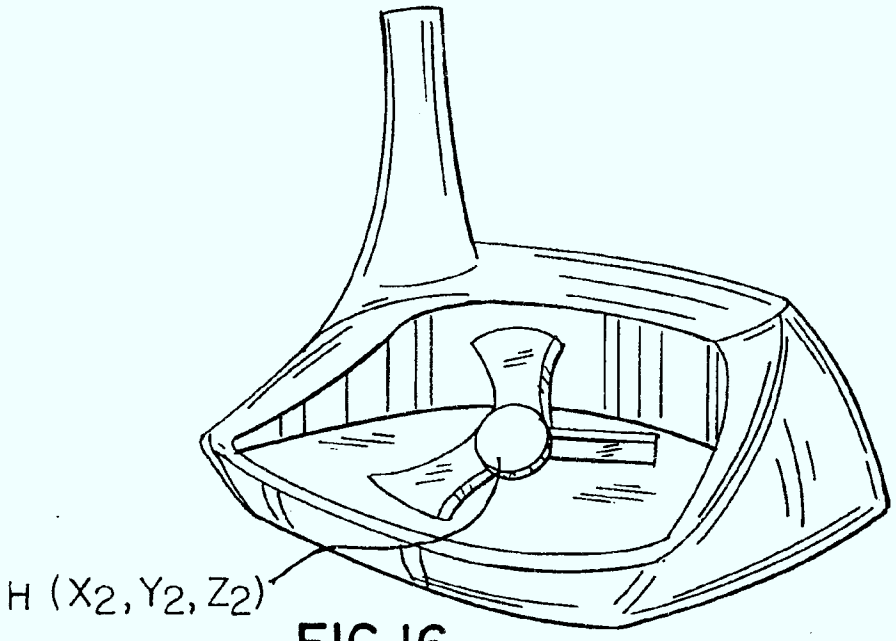

FIG. 16

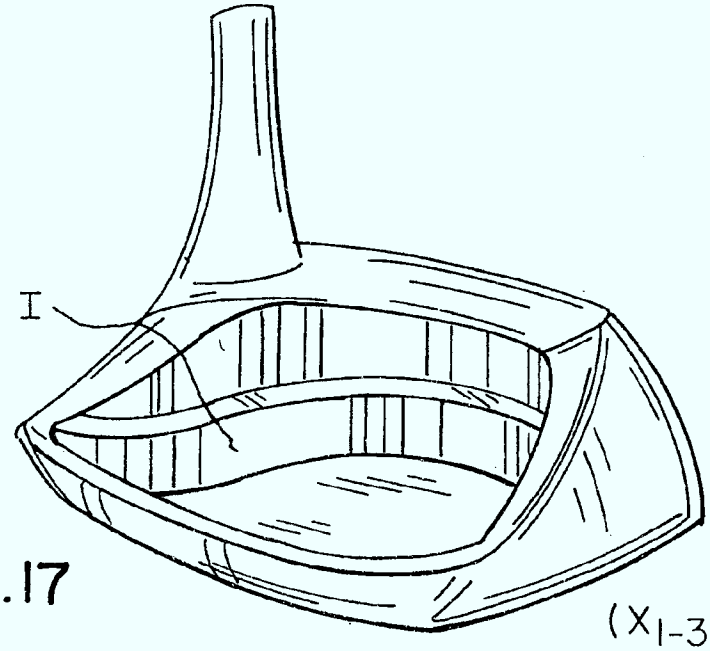

FIG. 17

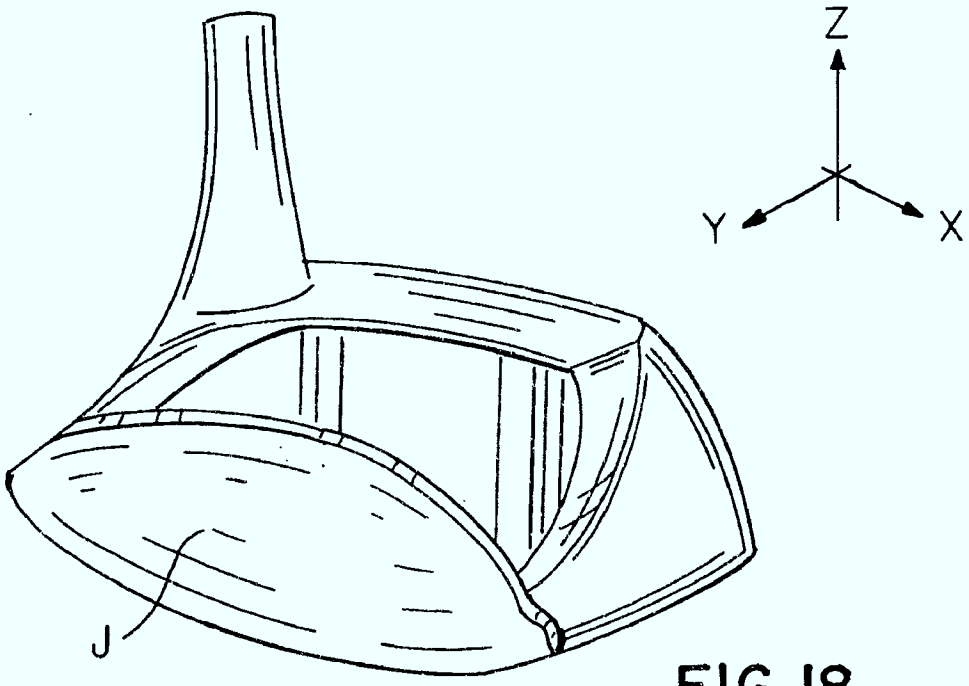

FIG. 18

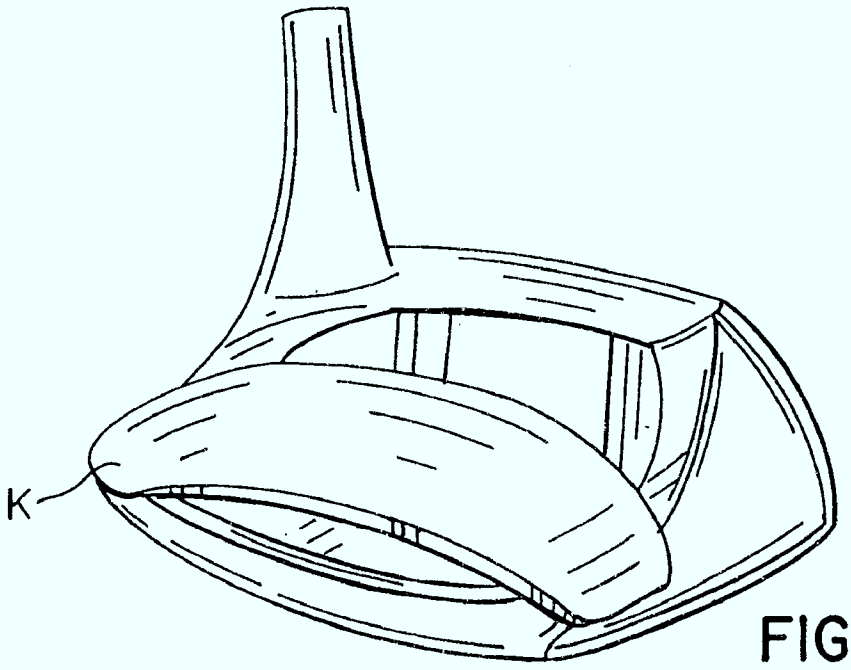

FIG. 19

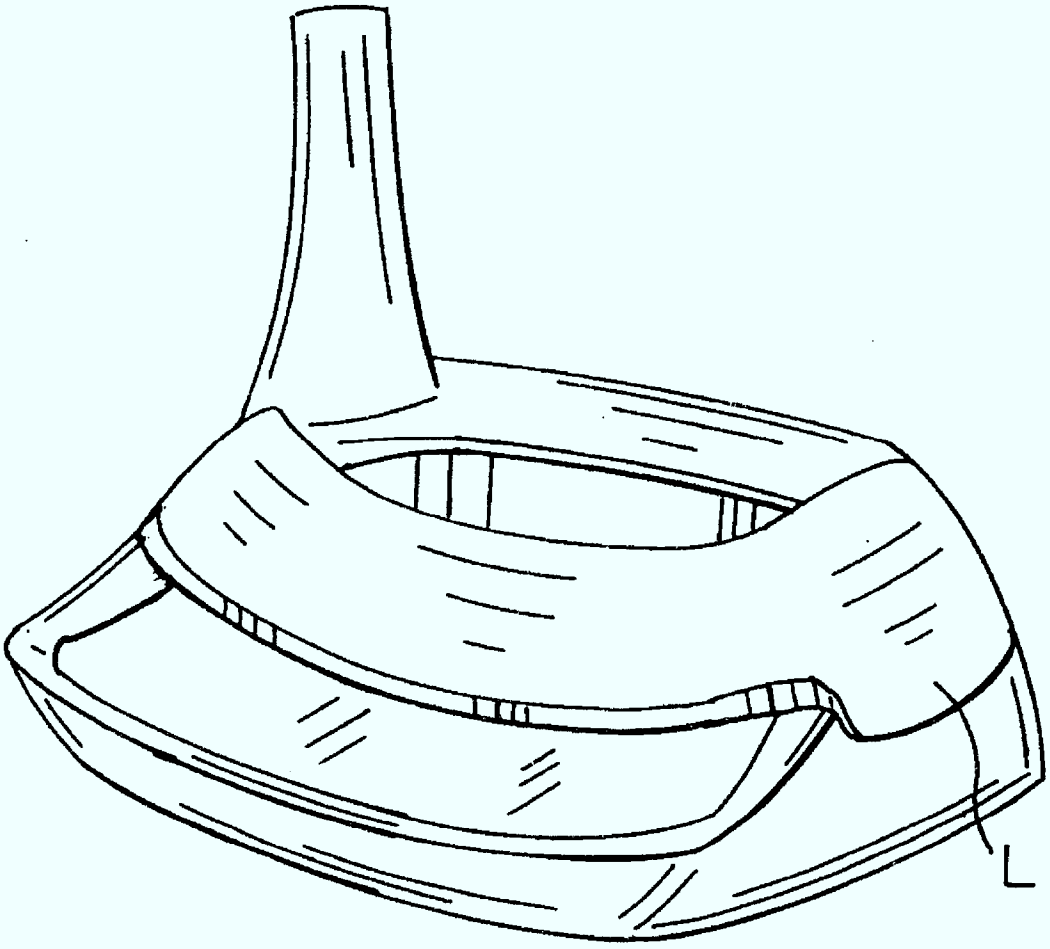

FIG. 20

METHOD OF GOLF CLUB PERFORMANCE ENHANCEMENT AND ARTICLES RESULTANT THEREFROM

REFERENCE TO RELATED APPLICATIONS

This is a continuation-in-part of application Ser. No. 10/383,532, entitled Multi-purpose Golf Club, filed Mar. 10, 2003, now abandoned and the same is incorporated herein by reference, which is a continuation-in-part of application Ser. No. 09/849,522, now U.S. Pat. No. 6,530,848, which is a utility conversion of Provisional Patent application No. 60/205/250, filed May 19, 2000. Each of said applications are incorporated by reference herein.

BACKGROUND OF THE INVENTION

A. Area of Invention

The invention relates to a method of selectably varying the center of gravity and distribution of weighting in a void space in the head of a golf club.

B. Prior Art

Golfing enthusiasts appreciate the dynamic characteristics of golf irons and woods and the manner in which performance of the same will vary as a consequence of physiologic characteristics of a particular golfer. Such physiologic factors will affect a variety of ball strike parameters including, without limitation, loft trajectory, inertial spin, range hook and slice.

My issued U.S. Pat. No. 6,530,848 (2003) sets forth the use of weighting options for the center of gravity ("CG") of a club resultant from a substantial hollowing out of or void space in a top or predominant portion of the club head, as a manufacturing step. Said void space teaches the significance of placement of the position of a weight within such hollowed-out portion to effect a variety of ball strike and flight characteristics including increase or decrease of clockwise spin, counterclockwise spin and back spin of the ball so propelled by the golf club. Said patent further sets forth the variability of a weight element to adjust the weight of the golf club to induce a more desirable ball spin to thereby accomplish an improved trajectory of ball flight.

Use of a cavity within the upper surface of a putter type golf club in to vary the weight or balance of the heel, toe and bottom portions of a putter club head, and certain uses of weights therein, is recognized in U.S. Pat. No. 5,683,307 (1997) to Rife, entitled Putter Type Golf Club Head with Balance Weight Configuration and Complementary Ball Striking Face. U.S. Pat. No. 3,841,640 (1974) to Gaulocher, entitled Golf Putter, reflects a rudimentary recognition of the importance of proper weighting within the head of a golf putter to compensate for physiologic needs and preferences of a golfer. Such approaches in the prior art have attempted to address one or another problem associated with the golf strike characteristics or, in some cases, the characteristics of the golf range surface. As is well known, golfing greens are replete with imperfections which affect ball speed, spin and roll. Accordingly, a wide range of both ball flight and ground surface performance factors can be attributed to weight distribution and position of the CG within the club head.

U.S. Pat. No. 4,909,029 (1990) to Sinclair employs an upper void space to modify the aerodynamics of the head of the golf ball.

The present inventive method reflects my discovery that many more options for positioning of the CG and distribution of weight or weights within the head of a golf club, whether that club comprises an iron, a wood, or a hybrid

thereof, in positioning, behind the club face, selectable high density weighting elements at coordinates of an orthonormal matrix up to 27 potential locations in a void space, to thus compensate for physiologic imperfections in one or more characteristic of the swing of a golfer. The angulation and curvature of the club face relative to said matrix provides a yet further performance enhancing parameter that co-acts with weight elements within said matrix.

Published U.S. Specification US 2003/0199331A1 teaches use of a re-positionable weight chip in a golf club to modify club performance.

SUMMARY OF THE INVENTION

The performance of golf club heads made of wood, plastic, metal, and composites thereof may be enhanced through the provision of a void space behind a face plate and above the sole portion, to decrease club weight and provide single or combinations of selectable weighting elements within volumetric coordinates of an orthonormal matrix within said void space. Said coordinates are provided as a function of ball strike, flight analysis and physiologic or computerized observation of the golf strike swing. In a basic embodiment, ball flight may be affected by varying the mass of a selectable sole portion which may be uniformly or variably weighted from the club hosel to toe end. Weight of uniform or non-uniform distribution may also selectably be provided within the void space behind the face plate and above the fixed sole portion. The angle and curvature of the face plate may also be varied.

The inventive method more particularly comprises a method of golf club performance enhancement, the method comprising the steps of (a) provision of a void space behind a face plate of said club and above a sole portion thereof; and (b) in a virtual X, Y, Z orthonormal coordinate system in which said sole portion is partially congruent with a bottom-most xy plane thereof, in which said face plate intersects a forward-most XZ plane thereof, and in which a heel and hosel side of said club intersects a YZ plane thereof substantially at an origin of said coordinate system, and further in which an increase in X-axis value corresponds to a direction of a toe of said club, an increase in Y-axis value corresponds in direction to a rear of said club, and an increase in Z-axis value corresponds to increase in height above said sole portion, the steps of selectably employing at least two of the following club weighting strategies: (i) to modify backspin, providing within said void space, weighting means at a low Y, low Z coordinate to increase backspin or at a high Y, high Z coordinate to decrease backspin; (ii) to modify ball penetration, providing within said void space weighting means at a high Y, high Z coordinate to maximize penetration or at a low Y, low Z coordinate to minimize penetration; (iii) to modify ball trajectory, modifying weighting means within said void space at a low Z-coordinate to increase trajectory or at a high z-coordinate to decrease trajectory; and (iv) to compensate for bait hook or slice, providing weighting means within said void space at a low X-coordinate to compensate for hook or a high X-coordinate to compensate for slice.

It is accordingly an object of the invention to provide a golf club having a weight modifiable club head, inclusive of interchangeable sole plates and/or weighting elements, which express a universal method of golf club head modification to account for ball backspin, penetration, trajectory, and hook or slice.

It is another object to provide a wooden, plastic or metal golf club having a head with a hollowed out portion behind the face plate and above a uniform or non-uniform sole plate.

It is a further object of the invention to provide a golf club head with a hollowed-out void space, made during production, to a golfer's preference, and further providing a modifiable sole plate, with or without addition integral or added weights selectable positioned in volumetric coordinates of a virtual matrix about said void space.

It is a further object to provide a club head, modified with a hollow interior and having selectable point, axis, vector distributed linear or non-linear weights which may be inserted or removed to suit particular preferences, needs and physiologic requirements of a golfer.

It is a yet further object of the invention to provide improved elements and arrangements thru a method of providing an inexpensive, durable and effective means of compensating for ball spin, ball flight trajectory, ball spin and golf course surface variables.

The above and yet other objects and advantages of the present invention will become apparent from the hereinafter set forth Brief Description of the Drawings, Detailed Description of the Invention, and Claims appended herewith.

BRIEF DESCRIPTION OF THE DRAWINGS

FIG. **1** is a perspective view of the head of a golf club configured for the practice of the present inventive method and products thereof.

FIG. **2** is an illustration of a virtual three-dimensional orthonormal matrix by which the inventive method may be practiced.

FIG. **3** is a graph-type illustration a golf club performance parameters which may be effected by weighting within the xy plane of said orthonormal matrix.

FIG. **4** is a graph showing the golf performance parameters which may be influenced by weighting within the xz plane of said matrix.

FIG. **5** is a graph showing the club performance characteristics which may be influenced by weighting within the yz plane of said matrix.

FIG. **6** is an illustration of a weighting of a club head of the type of FIG. **1** at a (X2, Y2, Z3) coordinate of said matrix.

FIG. **7** is a front plan view of the club of FIG. **1** showing weighting at x3, Y1, Z2 coordinate and at a (X2, Y1, Z1) coordinate.

FIG. **8** is a view, similar to that of FIG. **6**, however showing weighting of the club of FIG. **1** at a (X2, Y3, X3) coordinate and at the (X3, Y1, Z2) coordinate.

FIG. **9** is a view, similar to that of FIG. **7**, however showing weighting at a (X1, Y1, Z1) coordinate.

FIG. **10** is a view, similar to that of FIG. **6**, however showing weighting at a (X2, Y3, Z1) position.

FIG. **11** is a view similar to that of FIG. **6**. however showing weighting at a (X1, Y3, Z2) coordinate.

FIG. **12** is a view, similar to that of FIG. **6**, however showing weighting of the club head at a (X3, Y3, Z3) coordinate of the orthonormal matrix.

FIG. **13** is a three-dimensional graph showing the effect of weighting at different combinations of the X, Y, and Z coordinates of the orthonormal matrix and the parametric results of such weighting.

FIG. **14** is a view of a club head of the type of FIG. **1**, however showing the use of multiple weights across multiple coordinates.

FIG. **15** is a view, the use of a horse shoe weighting element to broaden the sweet spot and to achieve other modifications of ball flight performance.

FIG. **16** is s a view showing the use of a propeller type weighting element to modify golf club performance.

FIG. **17** is a view in which a strip-like element is used to modify club performance.

FIG. **18** illustrates the use of a clip-on element to achieve particular modifications of golf strike and ball flight characteristics.

FIG. **19** shows a further snap-on element to provide different performance characteristics.

FIG. **20** shows a yet further snap-on weighting element for the modification of ball strike characteristics.

DETAILED DESCRIPTION OF THE INVENTION

With reference to the perspective view of FIG. **1**, there is shown a golf club head **100** modified from the shape of more conventional golf club heads through the provision of a void space **102** behind a face plate **104** above a sole plate portion **106** of the club head **100**. Also shown in FIG. **1** is a golf club hosel **108** which enters the club head at a heel **110** of the club. Located oppositely to heel **110** is club toe **112**.

In FIG. **2** is shown an orthonormal matrix **114** which surrounds the club **100**, and is defined by an X, Y and Z coordinate system corresponding to the three essential axes of the club, shown to the upper left of FIG. **2**. Said X, Y and Z axes of said orthonormal matrix **114** provide far a 3x3x3 system of 27 volumetric coordinates. Therein, the position (X_0, Y_0, and Z3) defines the location it which hosel **108** enters dub head **100**. The (X2, Y2, Z2) position, shown in shading In FIG. **2**, represent the center of gravity of the club and is consistent with a normal or standard flight of the golf ball. In other words, a golfer having a perfect golf swing would, in accordance with the present system, apply a weighting element to a club head, of the type of club head **100**, at position (X2, Y2, Z2) of the matrix shown therein. For ease of reference in the figures which follow, applicable coordinate nomenclature for various positions

In the charts of FIGS. **3–5** are shown the XY, XZ and YZ coordinate relationships which affect particular parameters of ball strike, path, trajectory and rotation which are of interest to golfers. More particularly, shown in FIG. **3** is the effect of different types of weighting within the XY plane of orthonormal matrix **112**, that is, the horizontal plane thereof. Therein, weighting in the +X or toe direction will increase the loft or ballooning of flight path of the golf ball, so that +X weighting direction of the club will provide for slice (right curvature) compensation of the golf ball. Conversely, weighting toward the heel or in the –X direction will provide for hook (left curvature) compensation. FIG. **3** also indicates that maximum backspin of the ball may be achieved by weighting at a low y position, that is, at the plane of the face plate, while minimum back spin may be accomplished through weighting toward the rear of the club, this corresponding to the Y3 position.

With reference to FIG. **4**, one may note that hook or slice compensation, as in FIG. **3**, remains a function of the weighting along the X-axis. In the XZ plane which is a vertical plane co-parallel with club hosel **108**, trajectory may be controlled as a function of position of weighting upon the z-axis, that is, the lowest z-axis position (Z1) will afford the

highest trajectory, whereas the highest z-axis position (Z3) will produce the lowest trajectory of ball flight.

Backspin of the ball is also a function weighting along the Z-axis. As may be noted by the line at the middle of FIG. **4**, the Z1 position will produce a maximum spin of the ball, while weighting at Z3 will produce a minimum backspin. Accordingly, viewing FIGS. **3** and **4** in combination, it may be appreciated that a minimum backspin may be achieved by weighting at the (X2, Y3, Z3) coordinate, while maximum backspin may be achieved by weighting at the (X2, Y1, Z1) coordinate, as will also be illustrated in the figures which follow.

With reference to FIG. **5**, this chart corresponds to the YZ plane which is a vertical plane substantially parallel with toe face **110** of the club (see FIGS. **2** and **6**).

From FIG. **5**, it may be noted that minimum penetration, that is, maximum apex of ball flight, is achieved at the (Y1, Z1) position, while maximum penetration is achieved at the (Y3, Z3) position. Further, the highest trajectory may be seen to exist at the (Y2, Z1) position, while the lowest trajectory is achieved at the (Y2, Z3) position. Minimum backspin is achieved at (Y3, Z3) and maximum backspin at (Y1, Z1).

With the above in mind, the weighting coordinate (X2, Y2, Z3), which is shown in FIG. **6**, should be appreciated as one that does not provide for either hook or slice compensation but which provides for reduced trajectory (flatter path of ball flight) and some decrease in backspin due to the Z3 part of the coordinate shown.

In FIG. **7** are shown two different weighting coordinates, both within the Y1 axis which includes the plane of face plate **104** of the club head. More particularly, a weighting element A shown to the left of FIG. **7** is the (X3, Y1, Z2) position and affords neutral ballooning, slice compensation, and some additional backspin. In distinction, weighting element B of coordinate (X2, Y1, Z1) provides for high trajectory, maximum backspin and minimum penetration.

With reference to FIG. **8**, weighting element C (coordinate X2, Y3, Z3) provides for low trajectory, minimum backspin and maximum penetration, while element D of FIG. **8** provides for neutral ballooning of ball flight, slice (right curvature) compensation and medium trajectory.

With reference to the weighing element at (X1, Y1, Z2) shown in FIG. **9**, such an arrangement will provide for neutral ballooning, hook compensation, slightly additional backspin and medium trajectory.

The weighting element (X2, Y3, Z1) shown in FIG. **10** affords high trajectory, high backspin and high penetration, although not as high penetration as would exist were the weighting at the (X2, Y3, Z3) position.

Shown in FIG. **11** is a weighting element at the (X2, Y3, Z2; position. Thereby, there is achieved hook compensation, high penetration and, no change in the ball's natural trajectory.

In the weighting scheme shown in FIG. **12**, that is, weighting at the (X3, Y3, Z3) coordinate position, one achieves slice compensation, decreased backspin, low trajectory and maximum penetration.

Three-dimensional relationships of the above-described parameters of backspin, penetration, trajectory and ballooning are illustrated in FIG. **13**. It may be appreciated that ballooning control occurs primarily as a function of the X-axis, as does hook and slice compensation, while maximum backspin occurs as a function of weighting at the (Y1, Z1) position with minimum backspin occurring with weighting at the (Y3, Z3) position. Penetration is also a function of the combined effect of two axes, that is, maximum penetration occurring with weighting at the (Y3, Z3) position and minimum penetration occurring with weighting at the (Y1, Z1) coordinate.

In FIG. **14** is shown the use of weights E and F in two different areas of the golf club **100** of FIG. **1**. Therein, a good player would move weight E to the back of the club to achieve as penetrating a shot as he could, and would also position weight F to reduce the spin, putting an additional weight in the X-axis center (X2) of the club. This makes the sweet spot smaller, that is, the player must strike the ball right in the center (X2). That is, an ideal strike which would result in a best transference of energy. However, it causes a largest margin of error. Such a golfer therefore would have to be a rather good player to move to the center of the face where he wants to hit the ball. Said weight E also maximizes penetration.

In FIG. **15** is shown the effect of a horse shoe-like structure G, symmetric about the YZ plane at the X2 position. This helps the basic or average player. Such a player moves the weight toward the heel and the toe **112** to make his sweet spot as wide as possible. Structure G also moves the weight down toward the back to get some height on the ball, and also to get more penetration to pick-up some distance. This would be a club for a basic, standard player who simply needs some help that is not interested in slice hook combination. It's just addressing trajectory and spin rate.

With reference to FIG. **16**, there is shown the use of a propeller type weight H, having its center at (X2, Y2, Z2), which would be used if one were hitting the ball a bit to the left and low. To compensate for that, the weight is moved to the left, so that the ball will move to the right. To counteract the moving the weight to the left, one may place a projection of the weight H down toward the right hand corner to get the ball up into the air again, and to also move another projection to the rear for penetration and movement up in the air.

With reference to FIG. **17**, there is shown the use of a saddle-like weighting element I inserted along the sides and behind the face plate. The benefits of such a weighting geometry are that the weight is set to hit the ball a little higher because the weight is low. It also tends to give it a bit more of penetration, because the weight is moved back. By also moving it to the left, one pushes the ball out to the right, tending to give a shot slightly to the right and is penetrating, but yet will have some spin on it. So it starts out low, goes right and then slows down.

The following charts relate to weighting coordinates to figures, by planes of the orthonormal matrix.

CHART 1

(xy plane)

	X1 (heel)	X2	X3(toe)
Y_1	FIG. 9	FIG. 7(B), 14(F)	FIG. 7(A), 8(D)
Y_2		FIG. 2, 6, 16	
Y_3	FIG. 11, 14(E)	FIGS. 8(C), 10, 14(E)	FIGS. 10, 14(E)

CHART 2

(xz plane)

	X1 (heel)	X2	X3 (toe)
Z1 (heel)		FIGS. 7(B), 10, 16	
Z2	FIG. 9, 11	FIG. 2, 14(F)	FIGS. 7(A), 8(D)
Z3		FIGS. 6, 8(C)	FIG. 10

CHART 3

	(yz plane)		
	Y1 (toe)	Y2	Y3
Z1	FIG. 7(B)	FIG. 16	FIG. 10, 14(E)
Z2	FIGS. 7(A), 8(D), 9	FIG. 5	FIG. 11
Z3		FIG. 6	FIG. 8(C), 12

In FIGS. **18**–**20** are shown the use of clip-on type weighting elements. More particularly, a weighting element J of FIG. **18** moves weight to the rear of the club, thus increasing penetration, while lowering the enter of gravity of the club and increasing spin.

In a weighting element K of FIG. **19**, weight is not moved back as far, and is raised-up slightly higher than that of element J. This reduces penetration with slightly reduced backspin, the result being a more controllable ball strike.

In FIG. **20**, weighting element L provides an elevation of weight, thereby lowering trajectory which also widens the sweet spot, as in element G of FIG. **15**. Also, if element L is asymmetric to the right of a YZ plane of symmetry thru location X2, slice compensation is also provided.

It is noted that many of the above functions of the weighting elements may be achieved thru variation in weight and dimension of sole plate **106** (see FIG. **1**). For example, if a change in weight is indicated at a (X, Y, Z1) coordinate, a change in weight or weight-distribution in the sole plate will affect the parameters shown in the chart of FIG. **3**. Also, as may be noted in FIG. **4**, addition or reduction of weight at Z1 will affect trajectory and backspin.

While there has been shown and described the preferred embodiment of the instant invention it is to be appreciated that the invention may be embodied otherwise than is herein specifically shown and described and that, within said embodiment, certain changes may be made in the form and arrangement of the parts without departing from the underlying ideas or principles of this invention as set forth in the Claims appended herewith.

Having thus described my invention what I claim as new, useful and non-obvious and, accordingly, secure by Letters Patent of the United States is:

1. A method of enhancing performance of a golf club, the method comprising the steps of:

(a) providing a void space behind a face plate of said club and above a sole portion thereof;

(b) applying a virtual X, Y, Z orthonormal coordinate system to said club in which said sole portion is partially congruent with a bottom-most xy plane thereof, in which said face plate intersects a forward-most XZ plane thereof, and in which a heel and hosel side of said club intersects a YZ plane thereof substantially at an origin of said coordinate system, and further in which an increase in X-axis value corresponds to a direction of a toe of said club, an increase in Y-axis value corresponds in direction to a rear of said club, and an increase in Z-axis value corresponds to increase in height above said sole portion;

(c) selectably employing two of the following club weighting strategies to said club, in which at least one weighting means thereof is not contiguous to any part of said face plate and a selected value of Y in any one of said strategies does not equal a selected value of Y in a second selected strategy, the strategies comprising:

(i) to modify backspin, providing within said void space weighting means between a low Y, low Z coordinate to increase backspin to a high Y, high Z coordinate to decrease backspin;

(ii) to modify ball penetration, providing within said void space weighting means between a high Y, high Z coordinate to maximize penetration to a low Y, low Z coordinate to minimize penetration;

(iii) to modify ball trajectory, modifying weighting means substantially within said void space between a low Z-coordinate to increase trajectory to a high Z-coordinate to decrease trajectory; or

(iv) to compensate for ball hook or slice, providing weighting means substantially within said void space at a low X-coordinate to compensate for hook to a high X-coordinate to compensate for slice,

thereby enhancing performance of said club.

2. The method as recited in claim **1**, in which said selectable club weighting strategies further include the step of:

(v) providing weighting means within said void space at a high Y, high Z coordinate to minimize said ballooning or at a low Y, low Z coordinate to maximize said ballooning.

3. The method as recited in claim **1**, in which said weighting means comprises golfer-replaceable elements.

4. The method as recited in claim **2**, in which said weighting means comprises golfer-replaceable elements.

5. The method as recited in claim **1**, in which said weighting means comprises a weight which is non-uniform along one or more of said X, Y and Z axes.

6. The method as recited in claim **5**, in which said weighting means comprises golfer-replaceable elements.

7. The method as recited in claim **5**, including:

selection of Step(c)(ii) by securing a strip-like weighting element over said void space at about a (Y2–Y3, Z2) position and spanning all X positions, thereby providing modification of penetration at a medium ball trajectory; and

selection of Step (c)(iv) with regard to the x-axis to compensate for hock or slice.

8. The method of enhancing performance of a golf club as recited in claim **1**, in which:

said selectably employing two club weighting strategies further comprising employing three of said strategies.

9. The method of enhancing performance of a golf club as recited in claim **1**, in which at least one selected strategy includes weighting means not contiguous with any inner surface of said void space.

10. The method as recited in claim **1**, in which a weighting means of a first selected strategy may be integral with that of a second selected strategy.

11. A method of enhancing performance of a golf club, the method comprising the steps of:

(a) providing a void space behind a face plate of said club and above a sole portion thereof;

(b) applying a virtual X, Y, Z orthonormal coordinate system to said club in which said sole portion is partially congruent with a bottom-most xy plane thereof, in which said face plate intersects a forward-most XZ plane thereof, and in which a heel and hosel side of said club intersects a YZ plane thereof substantially at an origin of said coordinate system, and further in which an increase in X-axis value corresponds to a direction of a toe of said club, an increase in Y-axis value corresponds in direction to a rear of said club, and

an increase in Z-axis value corresponds to increase in height above said sole portion;

(c) providing weighting means substantially within said void space between a high Y, high Z coordinate to minimize ballooning to a low Y, low Z coordinate to maximize said ballooning; and

(d) providing weighting means substantially within said void space between a low X-coordinate to compensate for hook to a high X-coordinate to compensate for slice.

12. The method as recited in claim **11**, further comprising the step of:

(e) selectably employing at least one of the following club weighting strategies to said club, in which a selected value of X, Y or Z does not include the value of Y used in Step (c):

(i) to modify backspin, providing within said void space, weighting means between a low Y, low Z coordinate to increase backspin to a high Y, high Z coordinate to decrease backspin; or

(ii) to modify ball penetration, providing within said void space weighting means at a high Y, high Z coordinate to maximize penetration or at a low Y, low Z coordinate to minimize penetration; or

(iii) to modify ball trajectory, providing weighting means substantially within said void space between a low Z-coordinate to increase trajectory to a high Z-coordinate to decrease trajectory.

13. The method as recited in claim **12**, in which any selected value of Y of Step (e) is not contiguous with any part of said face plate.

14. The method as recited in claim **12**, in which said weighting means of at least one strategy is non-uniform along one or more of said X, Y and Z axes.

15. The method as recited in claim **14**, including:

selection of Step (e)(ii) by securing a strip-like weighting element over said void space at about a (Y2–Y3, Z2) position and spanning all X positions, thereby providing modification of penetration to medium ball trajectory; and

selection of Step (d) with regard to the X-axis to compensate for hook or slice.

16. The method as recited in claim **11**, in which said weighting means comprises golfer-replaceable elements.

17. The method as recited in claim **11**, in which said weighting means of at least one strategy is non-uniform along one or more of said X, Y and Z axes.

18. The method as recited in claim **17**, in which said weighting means comprises golfer-replaceable elements.

19. The method as recited in claim **11**, in which in which a weighting means of a first selected strategy may be integral with that of a second selected strategy.

* * * * *

UNITED STATES PATENT AND TRADEMARK OFFICE

CERTIFICATE OF CORRECTION

PATENT NO. : 7,128,660 B2
APPLICATION NO. : 10/818899
DATED : October 31, 2006
INVENTOR(S) : John P. Gillig

It is certified that error appears in the above-identified patent and that said Letters Patent is hereby corrected as shown below:

On Title Page item (73) Assignee, change

"(73) Assignee: Elizabeth P. Gillig Revocable Trust, Duxbury, MA (US)"

to

--(73) Assignee: Triple Tee Golf, Inc., Pompano Beach, FL (US)--

Signed and Sealed this

Thirty-first Day of July, 2007

JON W. DUDAS
Director of the United States Patent and Trademark Office

EX. B

US007128660C1

(12) INTER PARTES REEXAMINATION CERTIFICATE (712th)

United States Patent

Gillig

(10) **Number: US 7,128,660 C1**

(45) **Certificate Issued: Oct. 24, 2013**

(54) **METHOD OF GOLF CLUB PERFORMANCE ENHANCEMENT AND ARTICLES RESULTANT THEREFROM**

(75) Inventor: **John P. Gillig**, Pompano Beach, FL (US)

(73) Assignee: **Triple Tee Golf, Inc.**, Pompano Beach, FL (US)

Reexamination Request:
No. 95/002,049, Jul. 20, 2012

Reexamination Certificate for:

Patent No.:	**7,128,660**
Issued:	**Oct. 31, 2006**
Appl. No.:	**10/818,899**
Filed:	**Apr. 3, 2004**

Certificate of Correction issued Jul. 31, 2007

Related U.S. Application Data

(63) Continuation-in-part of application No. 10/383,532, filed on Mar. 10, 2003, now abandoned, which is a continuation-in-part of application No. 09/849,522, filed on May 7, 2001, now Pat. No. 6,530,848.

(60) Provisional application No. 60/205,250, filed on May 19, 2000.

(51) **Int. Cl.**
A63B 53/00 (2006.01)
A63B 53/04 (2006.01)

(52) **U.S. Cl.**
USPC **473/324**; 473/409; 473/334; 473/340; 473/345

(58) **Field of Classification Search**
USPC 473/324, 409, 334, 340, 345
See application file for complete search history.

(56) **References Cited**

To view the complete listing of prior art documents cited during the proceeding for Reexamination Control Number 95/002,049, please refer to the USPTO's public Patent Application Information Retrieval (PAIR) system under the Display References tab.

Primary Examiner — Matthew C. Graham

(57) **ABSTRACT**

The performance of a golf club may be enhanced through the provision of a void space behind a face plate and above the sole plate, to decrease club weight and provide single or combinations of selectable weighting elements within volumetric coordinates of an orthonormal matrix about the void space. The weighting coordinates are provided in response to ball strike, flight analysis and physiologic observation of the golf strike swing. Ball backspin, trajectory, penetration and hook or slice may be modified through the use of a definable weighting strategy.

At the time of issuance and publication of this certificate, the patent remains subject to pending reexamination control number 90/012,788 filed Feb. 6, 2013. The claim content of the patent may be subsequently revised if a reexamination certificate issues from the reexamination proceeding.

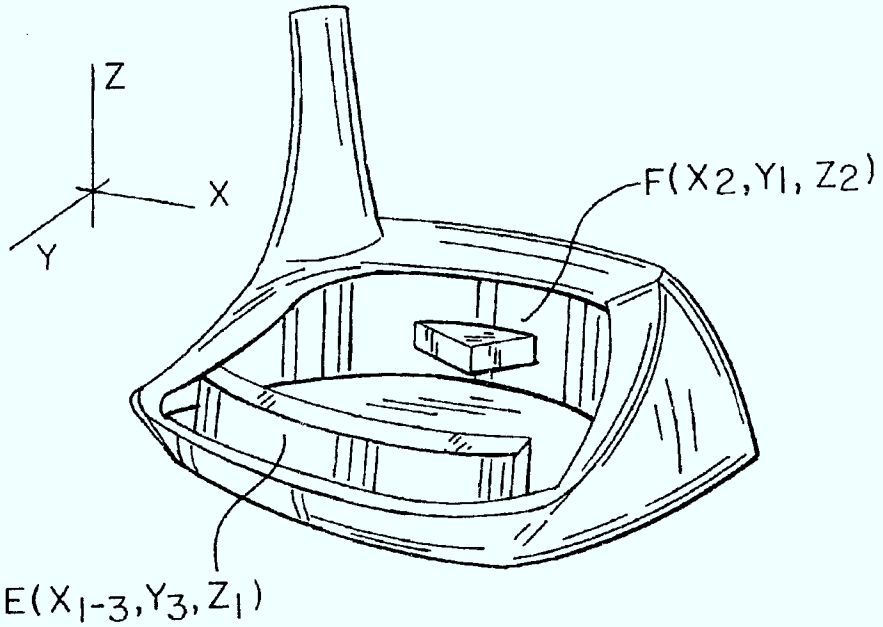

INTER PARTES REEXAMINATION CERTIFICATE ISSUED UNDER 35 U.S.C. 316

THE PATENT IS HEREBY AMENDED AS INDICATED BELOW.

Matter enclosed in heavy brackets [ ] appeared in the patent, but has been deleted and is no longer a part of the patent; matter printed in italics indicates additions made to the patent.

ONLY THOSE PARAGRAPHS OF THE SPECIFICATION AFFECTED BY AMENDMENT ARE PRINTED HEREIN.

Column 3, line 11:

It is a further object to provide a club head, modified with a hollow interior and having selectable point, axis, vector *and* distributed linear or non-linear weights which may be inserted or removed to suit particular preferences, needs and physiologic requirements of a golfer.

AS A RESULT OF REEXAMINATION, IT HAS BEEN DETERMINED THAT:

Claims **1-6, 8, 10-14** and **16-19** are cancelled.

Claims **7, 9** and **15** were not reexamined.

* * * * *

EX. C

US007128660C2

(12) EX PARTE REEXAMINATION CERTIFICATE (10189th)

United States Patent

Gillig

(10) Number: US 7,128,660 C2
(45) Certificate Issued: Jun. 12, 2014

(54) **METHOD OF GOLF CLUB PERFORMANCE ENHANCEMENT AND ARTICLES RESULTANT THEREFROM**

(75) Inventor: **John P. Gillig**, Pompano Beach, FL (US)

(73) Assignee: **Triple Tee Golf, Inc.**, Pompano Beach, FL (US)

Reexamination Request:
No. 90/012,788, Feb. 6, 2013

Reexamination Certificate for:
Patent No.: **7,128,660**
Issued: **Oct. 31, 2006**
Appl. No.: **10/818,899**
Filed: **Apr. 3, 2004**

Reexamination Certificate C1 7,128,660 issued Oct. 24, 2013

Certificate of Correction issued Jul. 31, 2007

Related U.S. Application Data

(63) Continuation-in-part of application No. 10/383,532, filed on Mar. 10, 2003, now abandoned, which is a continuation-in-part of application No. 09/849,522, filed on May 7, 2001, now Pat. No. 6,530,848.

(60) Provisional application No. 60/205,250, filed on May 19, 2000.

(51) **Int. Cl.**
A63B 53/00 (2006.01)
A63B 53/04 (2006.01)

(52) **U.S. Cl.**
USPC **473/324**; 473/334; 473/340; 473/345; 473/409

(58) **Field of Classification Search**
USPC 473/335, 345, 349
See application file for complete search history.

(56) **References Cited**

To view the complete listing of prior art documents cited during the proceeding for Reexamination Control Number 90/012,788, please refer to the USPTO's public Patent Application Information Retrieval (PAIR) system under the Display References tab.

Primary Examiner Matthew C. Graham

(57) **ABSTRACT**

The performance of a golf club may be enhanced through the provision of a void space behind a face plate and above the sole plate, to decrease club weight and provide single or combinations of selectable weighting elements within volumetric coordinates of an orthonormal matrix about the void space. The weighting coordinates are provided in response to ball strike, flight analysis and physiologic observation of the golf strike swing. Ball backspin, trajectory, penetration and hook or slice may be modified through the use of a definable weighting strategy.

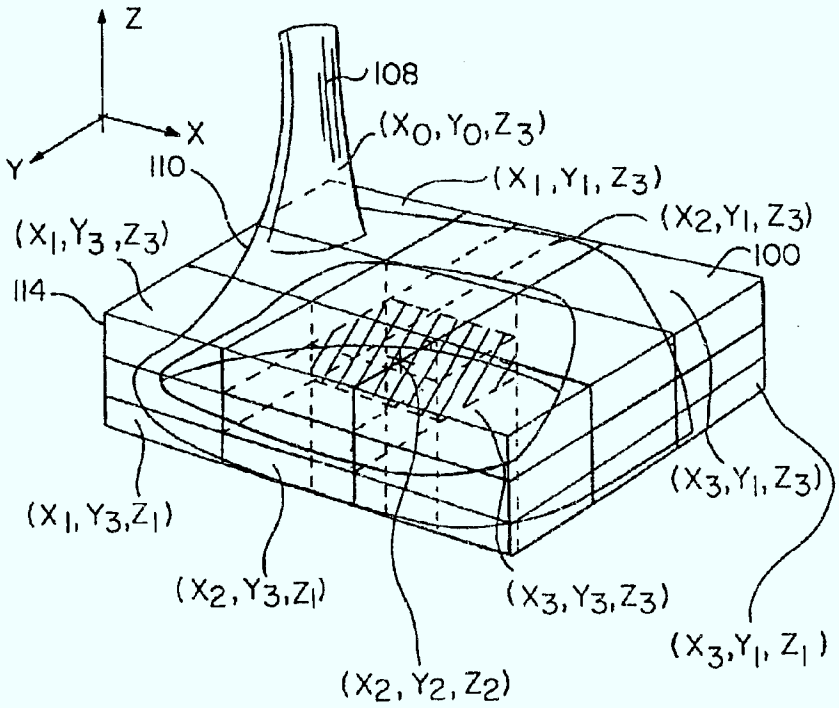

EX PARTE REEXAMINATION CERTIFICATE ISSUED UNDER 35 U.S.C. 307

THE PATENT IS HEREBY AMENDED AS INDICATED BELOW.

Matter enclosed in heavy brackets [ ] appeared in the patent, but has been deleted and is no longer a part of the patent; matter printed in italics indicates additions made to the patent.

AS A RESULT OF REEXAMINATION, IT HAS BEEN DETERMINED THAT:

Claims **1-6, 8, 10-14** and **16-19** were previously cancelled.

Claims **9** and **15** are cancelled.

Claim **7** is determined to be patentable as amended.

New claims **20-22** are added and determined to be patentable.

7. The method as recited in claim **[5]** *20*, including:

a selection **[**of Step(c)(ii)**]** by securing a strip-like weighting element over said void space at about a (Y**2**-Y**3**, Z**2**) position and spanning all X positions, thereby providing modification of penetration at a medium ball trajectory; and

weighting selection **[**of Step (c)(iv)**]** with regard to the X-axis to compensate for **[**hock**]** *hook* or slice.

20. A method of enhancing performance of a golf club head, the method comprising the steps of:

(a) providing a void space behind a face plate of the golf club head and above a sole portion thereof;

(b) applying a virtual X, Y, Z orthonormal coordinate system including X1, X2 and X3 respective low-to-high locations upon an X-axis of said system, Y1, Y2, and Y3 respective low-to-high locations upon a Y-axis of said system, and Z1, Z2 and Z3 respective low-to-high locations of said system upon a Z-axis of said system within said head to define a 3×3×3 volumetric matrix of cells in which said sole portion is partially congruent with a bottom-most XY plane thereof, in which said face plate intersects a forward-most XZ plane thereof, and in which a heel and hosel side of said head intersects a YZ plane thereof substantially at an origin of said coordinate system, and further in which an increase in X-axis value corresponds to a direction from a heel-to-toe of said head, an increase in Y-axis value corresponds in direction from a face-to-rear of said head, and an increase in Z-axis value corresponds to an increase in height above said sole portion; and

(c) selectably employing two of the following weighting strategies to said club head, in which at least one weighting means thereof is not contiguous to any part of said face plate and a selected value of Y in one of said strategies does not equal a selected value of Y in a second selected strategy, the strategies comprising:

(i) to modify backspin, providing within said void space weighting means between a low Y, low Z coordinate to increase backspin to a high Y, high Z coordinate to decrease backspin in which an increase in a Z-axis value does not correspond to a decrease in Y-axis value;

(ii) to modify ball penetration, providing within said void space weighting means between a high Y, high Z coordinate to maximize penetration to a low Y, low Z coordinate to minimize penetration;

(iii) to modify ball trajectory, modifying weighting means substantially within said void space between a low Z-coordinate to increase trajectory to a high Z-coordinate to decrease trajectory; or

(iv) to compensate for ball hook or slice, providing weighting means substantially within said void space at a low X-coordinate to compensate for hook to a high X-coordinate to compensate for slice,

in which at least one selected strategy includes weighting means not contiguous with any inner surface of said void space.

21. The method as recited in claim 20, further comprising:

positioning weighting means within said matrix of said void space between a low X or X1 coordinate to compensate for hook, to an high X or X3 coordinate to compensate for slice, said strategy selectably inclusive of a neutral hook-slice effect by positioning at a X2 coordinate.

22. The method as recited in claim 20, further comprising:

positioning weighting means within said matrix of said void space between a low Z or Z1 coordinate, corresponding to increased trajectory, to a high Z or Z3 coordinate corresponding to decreased trajectory, said strategy selectably inclusive of a neutral effect Z2 coordinate therebetween.

* * * * *

EX. D



Great Big Bertha udesign Driver

From $549.99
(/golf-clubs/mens/drivers/drivers-201 eat-big-bertha-udesign.html)

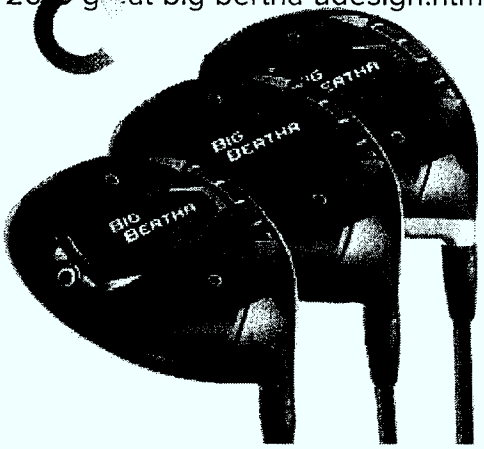

Big Bertha Alpha 816 Double Black Diamond Udesign Driver

(/golf-clubs/drivers-

From $599.99
2015-big-bertha-alpha-816-dbd-udesign.html)

Oh, we love hitting the driver. Golf is more fun when you can bomb it past everyone in your foursome and pick up the extra distance you've always wanted. Our Callaway Drivers have a mind-blowing amount of advanced technology (from outrageous speed to our patented Gravity Core) to help make every player longer off the tee. Trust us, go get fit and you'll know exactly what we mean.