UNITED STATES DISTRICT COURT
SOUTHERN DISTRICT OF FLORIDA
Case No. 12-CV-80701-SEITZ(consolidated)

FLORIDA ATLANTIC UNIVERSITY RESEARCH CORPORATION, *et al.*,
Plaintiffs,

v.
ACER, INC., *et al.*,
Defendants.
_____/

CASE NO. 12-80694-CIV-SEITZ

FLORIDA ATLANTIC UNIVERSITY RESEARCH CORPORATION, *et al.*,
Plaintiffs,

v.
ASUS COMPUTER INTERNATIONAL, *et al.*,
Defendants.
_____/

Case No.:12-80697-CIV-SEITZ

FLORIDA ATLANTIC UNIVERSITY RESEARCH CORPORATION, *et al.*,
Plaintiffs,

v.
TPV TECHNOLOGY LIMITED, *et al.*,
Defendants.
_____/

Case No.:12-80701-CIV-SEITZ

AMENDED ORDER GRANTING DEFENDANTS' MOTION FOR SUMMARY JUDGMENT[1]

THIS MATTER is before the Court on the Defendants' Combined Motion for Summary Judgment of Invalidity and Non-Infringement [DE-221].[2] Plaintiffs allege that Defendants have infringed on their patent, U.S. Patent No. 5,349,385 (the '385 Patent), which is for an adaptive

[1]The original order omitted Appendix A, referred to on page 3 of the Order. No other changes have been made.

[2]While the Motion for Summary Judgment was filed by the defendants in all three cases, it was only docketed in Case No. 12-80701. All record citations are to the docket in Case No. 12-80701-CIV.

scan converter that converts different input formats to a fixed output format for display on screens, such as computer monitors or televisions. Defendants move for summary judgment on three grounds: (1) the '385 Patent's claims are indefinite under 35 U.S.C. § 112(b); (2) the accused products do not infringe as a matter of law; and (3) the prior art anticipates and renders the '385 Patent obvious.

Having considered the parties' submissions and all the record evidence, in the light most favorable to the non-moving party, the Court will grant Defendants' motion for summary judgment. Defendants have established by clear and convincing evidence that the '385 Patent is indefinite and, therefore, invalid because it does not clearly link corresponding structure to the "means for recognizing the number of lines in said [input/first[3]] format." Plaintiffs have not rebutted Defendants' evidence because they have not shown that one of ordinary skill in the art would know what specific structures perform the means for recognizing function set out in the Patent. Because the '385 Patent does not inform "with reasonable certainty, those skilled in the art about the scope of the invention," the Patent is invalid. *See Nautilus, Inc. v. Biosig Instruments, Inc.*, 572 U.S. – , 134 S. Ct. 2120, 2124 (2014)

I. Undisputed Material Facts

A. The Patent

Plaintiffs hold U.S. Patent No. 5,349,385.[4] The invention can convert any of several

---

[3]The parties agree that the terms "input format" and "first format" are essentially interchangeable in the '385 Patent.

[4]The patent application was filed in 1992 and the Patent issued in 1994. The record does not disclose whether the Patent was ever reduced to practice, licensed, or otherwise widely produced and used.

input formats to a fixed output format for display on screens, such as computer monitors and televisions. While scan version technology had been in existence since the 1960s, the '385 Patent's novelty came from its ability to perform the conversion without storing an entire frame of information, as required by the prior art. The '385 Patent uses means-plus-function language, as permitted by 35 U.S.C. §112(f), for every limitation of all ten claims of the Patent, except for the preambles. In their Joint Claim Construction Statement [DE-85], the parties agreed that the specification discloses "Auto Line Number 30" as purported structure corresponding to 14 of the 34 limitations recited by the Patent. While the parties disagree whether Auto Line Number 30 discloses structures capable of performing the corresponding functions, they do agree that Auto Line Number 30 is the corresponding structure for, among other things: (1) the "means for recognizing the number of lines in said [input/first] format" (claims 1-10); (2) the "means [for] automatically deriving an interpolation ratio" (claims 1-10); and (3) the "means for comparing the number of lines in a current [input/first] signal with said stored interpolation ratios and responsively to a match deriving the [required interpolation ratio/interpolation required]" (claims 3, 5, 8, 10). Auto Line Number 30 is shown in Figure 1 of the specification, as part of a functional block diagram. In the Figure, Auto Line Number 30 is a box, with no internal circuitry or other structure shown. Figure 1 is set out in Appendix A.

The only structure explicitly set out in the Patent as part of Auto Line Number 30 is set out in the following sentence: "These ratios are stored in memory (RAM) embodied in block 30 and compared with the current input to create a match; this match determines the scan conversion routine." ('385 Patent, 3:52-55.) No other structure corresponding to Auto Line Number 30 is explicitly set out in the Patent.

B. The Experts and their Interpretations of Auto Line Number 30

Defendants first raised their invalidity contentions in their Preliminary Invalidity Contentions filed on March 15, 2013 [DE-63]. Because the Patent does not explicitly disclose structure associated with Auto Line Number 30, other than the RAM, the relevant evidence is the testimony and reports of those ordinarily skilled in the art. In this case, the parties have submitted the deposition testimony of the inventor of the '385 Patent, the deposition testimony of the manager of the laboratory in which the inventor worked at the time of the invention, and the deposition testimony of Plaintiffs' industry expert. Additionally, both sides have retained technology experts. The technology experts testified at the *Markman* hearing on September 20, 2013 and October 2, 2013. The parties have also submitted for consideration the February 24, 2014 Initial Validity Expert Report of Plaintiffs' technology expert, Dr. von Herzen; the February 3, 2014 Initial Infringement Report of Dr. von Herzen; the March 31, 2014 Declaration of Dr. von Herzen; the February 24, 2014 Expert Report of Defendants' technology expert, Dr. Reader; and the March 17, 2014 Declaration of Dr. Reader.

1. The Inventor

The inventor of the patented invention, Dr. William Glenn, testified that a person could not just go into Radio Shack and buy an Auto Line Number 30 circuit, that he did not know whether one could find an Auto Line Number 30 on a specification sheet from a manufacturer, and that he did not recall ever hearing the term outside the context of the Patent. (Glenn Dep.[5] 211:21-212:2; 212:13-20.) When asked if he knew of a circuit that could perform the function of recognizing the number of lines in said input format, Dr. Glenn testified that "there are several

[5]Portions of the Glenn Deposition are filed at DE-224-32 and DE-224-33.

possible circuits that could do that." (*Id.* at 216:22-217:5.) In response to the question of whether he knew what circuit would be used for recognizing the number of lines in an input signal, Dr. Glenn responded, "Not really, you would have to figure out what the circuit signal would be." (*Id.* at 219:9-20.) Dr. Glenn's deposition was taken over several days. He testified that between days, he read the Patent. (*Id.* at 467:8-10.) Despite reviewing the Patent, Dr. Glenn stated that he did not find any more information about what Auto Line Number 30 is. (*Id.* at 468:17-23.)

2. The Markman Hearing

The first expert discussion of the structure of Auto Line Number 30 was at the *Markman* hearing on September 20 and continued on October 2, 2013. Plaintiffs' expert, Dr. Brain von Herzen, stated that Auto Line Number 30 was a "digital state machine," which meant a digital circuit that "can take several inputs, stores information in memory, and generates an output." (DE-109: 31:7-17.) Later in the *Markman* hearing, Dr. von Herzen testified that:

> It's my understanding that a sync signals, a plurality of sync signals, can be used to do the recognition. So that's one way that it can be done. It could be done, for example, by counting. It could be done, for example, by timing. The time differences between the sync signals, for example, the time between the horizontal syncs and the time and the number . . . sync signals are an example of how you can measure the number of lines.

(DE-130, 29:13-25.) He continued:

> Furthermore, there are other features -- I mean, the sync signals are examples that are specifically cited here about the features that can be counted. In addition, you can be looking at horizontal features such as the front porch or the back porch of a horizontal scan line or a vertical retrace interval, could be other properties that could be measured to those who have skill in the art and these are ways of measuring the input signal and recognizing numbers of lines. It's not explicitly talked about so much in this patent, but this is a set of examples of what could be used to recognize the number of lines.

(DE-130, 30:16-31.) At the *Markman* hearing Defendants' expert, Dr. Clifford Reader, in

response to the Court's question, "So you are saying that in the auto line, it is a little computer doing counting or –," stated that Auto Line Number 30 contains "some element that counts." (DE-130, 47:9-11.)

3. The Expert Reports and Declarations

In his February 3, 2014 Initial Infringement Expert Report, Dr. von Herzen stated that Auto Line Number 30 is the corresponding structure for the function "recognizing the number of lines in said input format" and that "a recognizing component (*e.g.*, a counter, a timer, *etc.*) of the Auto Line Number circuit 30 would perform this function." (DE-224-10 at 4.) In the same report, Dr. von Herzen refers to the "recognizing" function as being performed by "a counter component (or equivalent timing component) . . ." (*Id.* at 5.) Dr. von Herzen further states that "a software implementation of the structural components was available at the time of issuance of the ['385] Patent." (*Id.* at 6.) Later, in his February 24, 2014 Initial Validity Expert Report, Dr. von Herzen states that one ordinarily skilled in the art would know that the structure corresponding to the "means for recognizing" is "a counter." (DE-224-1 at 50.) In the same Validity Report, Dr. von Herzen states that three earlier patents do not disclose a means for recognizing the number of lines. (DE-224-2 at 43-44; 56; DE-224-3 at 3-4.) However, in his later Declaration, Dr. von Herzen states that the same three patents *disclose* "the same counter of known structure that is disclosed in the ['385] Patent to a person of ordinary skill in the art." (DE-248 at ¶¶16-18.)

In his Declaration in Support of Summary Judgment, Defendants' expert, Dr. Reader states that "'Auto Line Number 30' is not something well-known in the art that performs a common electrical function." (DE-223 at 8.) Dr. Reader further states that a person of ordinary

skill in the art would not know from reading the Patent to employ a "digital state machine" to achieve the claimed functionality of recognizing the number of lines. (*Id.* at 10.) At his deposition, Dr. Reader stated that "a counter is one possible way to do that." (DE-203, 139:1-2.) However, the context of that statement is not clear because of the redaction of the transcript that was filed with the Court.

4. Others Skilled in the Art

While not offered as technical experts, two other witnesses testified at their deposition that they did not know what Auto Line Number 30 is. John Marcinka, Dr. Glenn's laboratory manager at the time of the invention, was shown the '385 Patent and asked if he knew what the Auto Line Number 30 box in the figure was and he replied "no." (Marcinka Dep.[6] 77:21-25.)[7] Similarly, Plaintiffs' industry expert, Dr. Frederic Kahn also stated that he did not know what was inside the box shown as Auto Line Number 30. (Kahn Dep.[8] 26:5-16; 39:7-11.) Later, Dr. Kahn testified that the Patent disclosed a counter (*id.* at 108:8-20), but when questioned further he was unable to identify where the Patent identifies a "counter" (*id.* at108:21-109:23). At his deposition, Dr. Kahn stated that he was someone with "45 years of knowledge and study preceded by university studies that are relevant – directly relevant." (*Id.* at 27:6-8.)

II. Discussion

---

[6]An excerpt of the Marcinka deposition is filed at DE-224-27.

[7]Plaintiffs later filed the Declaration of John W. Marcinka [DE-242], in which Marcinka directly addresses this statement given during his deposition. However, by separate order the Court struck the Declaration [DE-299]. Thus, only Marcinka's deposition testimony remains part of the record before the Court.

[8]Portions of the Kahn deposition are filed at 224-29.

A. The Indefiniteness Standard

Neither side disputes that the claims at issue are means-plus-function claims. As this Court previously stated in the Order re: Claims Construction [DE-151], means-plus-function claims are permitted under 35 U.S.C. § 112(f). Under § 112(f), formerly section 112, paragraph 6, "an element in a claim for a combination may be expressed as a means or step for performing a specified function without the recital of structure, material, or acts in support thereof, and such claim shall be construed to cover the corresponding structure, material, or acts *described in the specification* and equivalents thereof." (emphasis added). The Federal Circuit has explained:

> The duty of a patentee to clearly link or associate structure with the claimed function is the quid pro quo for allowing the patentee to express the claim in terms of function under section 112, paragraph 6. *Budde v. Harley-Davidson, Inc.*, 250 F.3d 1369, 1377 (Fed. Cir. 2001). Section 112, paragraph 6 was intended to allow the use of means expressions in patent claims without requiring the patentee to recite in the claims all possible structures that could be used as means in the claimed apparatus. *O.I. Corp. v. Tekmar Co.*, 115 F.3d 1576, 1583 (Fed. Cir. 1997). However, "[t]he price that must be paid for use of that convenience is limitation of the claim to the means specified in the written description and equivalents thereof." *Id.* **If the specification is not clear as to the structure that the patentee intends to correspond to the claimed function, then the patentee has not paid that price but is rather attempting to claim in functional terms unbounded by any reference to structure in the specification**. Such is impermissible under the statute.

Medical Instrumentation & Diagnostics Corp. v. Elekta AB, 344 F.3d 1205, 1211 (Fed. Cir. 2003) (emphasis added). Thus, if a patent does not clearly disclose the structure for a means-plus-function term, the claim is indefinite. *Ergo Licensing, LLC v. CareFusion 303, Inc.*, 673 F.3d 1361, 1363 (Fed. Cir. 2012).

Further, §112(b) sets out the general standard for definiteness: "[t]he specification shall conclude with one or more claims particularly pointing out and distinctly claiming the subject matter which the inventor or a joint inventor regards as the invention." The Supreme Court

recently addressed the definiteness requirement of § 112(b) in *Nautilus, Inc. v. Biosig Instruments, Inc.*, 572 U.S. –, 134 S. Ct. 2120 (2013). In *Nautilus*, the Court emphasized the importance of clarity in the specification, stating that "a patent's claims, viewed in light of the specification and prosecution history, [must] inform those skilled in the art about the scope of the invention with reasonable certainty. The definiteness requirement . . . mandates clarity, while recognizing that absolute precision is unattainable." *Id.* at 2129.[9]

While the understanding of one skilled in the art in no way relieves the patentee of adequately disclosing sufficient structure in the specification, interpretation of what is disclosed must be made in light of the knowledge of one skilled in the art. *Atmel Corp. v. Information Storage Devices, Inc.*, 198 F.3d 1374, 1380 (Fed. Cir. 1999). Thus, a "proper indefiniteness analysis asks first whether structure *is* described *in the specification*, and, if so, whether one skilled in the art would identify the structure from the description." *Biomedino, LLC v. Waters Technologies Corp.*, 490 F. 3d 946, 952 (Fed. Cir. 2007) (internal quotations omitted) (first emphasis in original; second emphasis added). Accordingly, the dispositive inquiry is whether one of ordinary skill in the art would understand the written description itself to disclose a structure, not simply whether such a person, reading the specification, would be capable of implementing a structure to perform the function. *Id.* at 953. Thus, "a bare statement that known

---

[9]This standard differs from the one relied on by Plaintiffs in their opposition to the motion. Plaintiffs cite to *Exxon Research & Engineering Co. v. United States*, 265 F.3d 1371, 1375 (Fed. Cir. 2001), for the standard set out therein:

> If the meaning of the claim is discernible, even though the task may be formidable and the conclusion may be one over which reasonable persons will disagree, we have held the claim sufficiently clear to avoid invalidity on indefiniteness grounds.

The *Nautilus* decision has clearly rejected this looser standard of definiteness.

techniques or methods can be used does not disclose structure." *Id.*

Neither side disputes that a party that seeks a finding of indefiniteness, must establish that the patent is indefinite by clear and convincing evidence. *See TecSec, Inc. v. International Business Machines Corp.*, 731 F.3d 1336, 1349 (Fed. Cir. 2013). Further, whether a patent is indefinite is a matter of law and, thus, appropriate for summary judgment. *Ancora Technologies, Inc. v. Apple, Inc.*, 744 F.3d 732, 734 (Fed. Cir. 2014).

B. The '385 Patent is Indefinite

Defendants' indefiniteness position is that the '385 Patent does not disclose any structure, other than a memory, corresponding to Auto Line Number 30 and its agreed functions of: (1) "recognizing the number of lines in said [input/first] format;" (2) "automatically deriving an interpolation ratio;" and (3) "comparing the number of lines in a current [input/first] signal with said stored interpolation ratios and responsively to a match deriving the [required interpolation ratio/interpolation required]." Plaintiffs, on the other hand, maintain that a person of ordinary skill in the art, reading the claims and specification, would recognize known structures and, therefore, under the controlling case law, the claims are not indefinite. Because the Patent is indefinite as to the corresponding structure for the "means for recognizing the number of lines in said [input/first] format" function, the Patent is invalid.[10]

The means-plus-function claim of "means for recognizing the number of lines in said

---

[10]While the Court need not determine whether the Patent is also indefinite as to the other two functions associated with Auto Line Number 30, the Court finds that the Patent is also indefinite as to these functions because there is no clearly identifiable structure associated with the means for deriving and the means for comparing. Further, the expert testimony presented by the parties indicates that one skilled in the art would be able to identify multiple structures that could perform the functions at issue. Thus, the '385 has not identified the structure corresponding to these two function with reasonable certainty.

[input/first] format" is used in all 10 of the numbered claims of the Patent. As previously stated, the parties agree that the structure corresponding to this claim is Auto Line Number 30. However, Defendants assert that Auto Line Number 30 is not an actual structure that could perform the corresponding function because neither the specification nor the Figures contain an explicit description of any actual structure associated with the means for recognizing function. Because this claim is used in all 10 claims of the '385 Patent, if the Patent does not disclose corresponding structure for Auto Line Number 30, the entire Patent would be invalid for indefiniteness.

The text of the specification sets out only one structure associated with Auto Line Number 30 - "memory (RAM) embodied in block 30" - and neither side argues that this structure is associated with the means for recognizing the number of lines. Defendants assert, and Plaintiffs have not argued otherwise, that an "Auto Line Number" circuit is not a term known to persons of ordinary skill in the art outside of the context of the '385 Patent. Defendants further assert, and the undisputed evidence supports the assertion, that an "Auto Line Number" circuit is not off-the-shelf hardware or software and there are several possible structures that could perform the functions of "Auto Line Number 30." Plaintiffs do not dispute that no additional structure, beyond memory, is explicitly disclosed in the claims, specification, or figures. Plaintiffs rely on their expert to contend that a person of ordinary skill in the art would know, based on the specification, that "Auto Line Number 30" includes, among other things, a counter.[11]

---

[11]Plaintiffs also contend that Auto Line Number 30 includes a divider circuit, a look-up table associated with memory, and a difference comparator. However, none of these structures are relevant to the means for recognizing the number of lines. Moreover, none of these structures

Neither side disputes that, at its core, the function of the "means for recognizing the number of lines" is to count the number of lines in the input format. The Defendants argue that the '385 Patent does not disclose any structure corresponding to this function. Plaintiffs implicitly concede that the '385 Patent does not explicitly disclose any structure corresponding to the means for recognizing the number of lines but maintain that a person of ordinary skill in the art would know that the corresponding structure is a "counter," with a well-known structure at the time. However, Plaintiffs' expert, Dr. von Herzen, in his Initial Infringement Expert Report, states that "one skilled in the art would understand that a recognizing component (*e.g.*, a counter, a timer, *etc.*)" would perform the function of recognizing the number of lines. At the *Markman* hearing Dr. von Herzen stated that Auto Line Number 30 was a "digital state machine," which meant a digital circuit that "can take several inputs, stores information in memory, and generates an output." Later at the *Markman* hearing, Dr. von Herzen testified that:

> It's my understanding that a sync signals, a plurality of sync signals, can be used to do the recognition. So that's one way that it can be done. *It could be done, for example, by counting. It could be done, for example, by timing.* The time differences between the sync signals, for example, the time between the horizontal syncs and the time and the number . . . sync signals are *an example of how you can measure the number of lines.*

(emphasis added). He continued:

> Furthermore, there are other features -- I mean, the sync signals are examples that are specifically cited here about the features that can be counted. In addition, you can be looking at horizontal features such as the front porch or the back porch of a horizontal scan line or a vertical retrace interval, could be other properties that could be measured to those who have skill in the art and these are ways of measuring the input signal and recognizing numbers of lines. *It's not explicitly talked about so much in this patent, but this is a set of examples of what could be used to recognize the number of lines.*

(emphasis added). Thus, Plaintiffs' expert has offered several possible ways of achieving the

---

are set out in the specification or claims.

function of counting – a counter, a timer, or a digital state machine – and has offered different features, or properties, that could be counted to recognize the number of lines. Further, Dr. von Herzen noted that the Patent does not explicitly discuss how the counting is done or what features, or properties, are counted. Noticeably, at the *Markman* hearing, Dr. von Herzen did not say that it was clear from the Patent what was counted or exactly how it was counted.

Plaintiffs argue that, at the *Markman* hearing, Defendants' expert admitted that the Patent discloses a counter, as Plaintiffs now assert. However, a careful reading of Dr. Reader's testimony indicates that Dr. Reader agreed that the function was counting the number of lines but he never stated that the counting was done via a counter, timer, or digital state machine. When asked by the Court at the *Markman* hearing whether there was a little computer doing the counting, Dr. Reader replied, "There is *some element* that counts, yes." (emphasis added). Thus, contrary to Plaintiffs' assertions, Dr. Reader never stated that the '385 Patent discloses a counter as the means by which the counting function is performed; instead, Dr. Reader simply recognized that something had to do the counting.

Plaintiffs further argue that based on the testimony of Dr. Reader and Dr. von Herzen, it is clear that a person of ordinary skill in the art would understand the presence of a counter based on the '385 Patent's specification. Consequently, Plaintiffs maintain that the Patent is not indefinite. Contrary to Plaintiffs' assertions, neither expert has definitely said that a person of ordinary skill in the art would read the patent and come to the conclusion that one specific type of known counter was disclosed by the patent. Thus, the evidence indicates that the specification does not disclose a structure for counting; instead, a person of ordinary skill in the art would be able to implement a structure that could count. That, however, is not the standard. As set out in

Biomedino, the question is whether a person of ordinary skill in the art would be able to identify from the specification a structure that could count, not whether the person would be able to come up with a structure on his own that could perform the function. Consequently, the '385 Patent is indefinite as to the structure associated with the means for recognizing the number of lines. Because a means for recognizing the number of lines is a part of every claim, the '385 Patent is invalid.

Plaintiffs' reliance on *Telcordia Technologies, Inc. v. Cisco Systems, Inc.*, 612 F.3d 1365 (Fed. Cir. 2010), to support their contention that the absence of internal circuitry in the written description does not render the means for recognizing the number of lines indefinite, is misplaced. While *Telcordia* did find that the absence of internal circuitry does not necessarily render a claim indefinite, in *Telecordia* the evidence established that a person ordinarily skilled in the art would know how to interpret the specification and actually build the circuit at issue. *Id.* at 1377. Such is not the case here, not only is there no consensus among the skilled artisans who testified, Plaintiffs' own expert testified at the *Markman* hearing that multiple types of devices could have been used to perform the counting function and that there are multiple methods of counting. Thus, in this case, the specification has not disclosed "adequate defining structure to render the bounds of the claim understandable to an ordinary artisan." *Id.* As the Federal Circuit has previously stated, "[t]hat ordinary skilled artisans could carry out the recited function in a variety of ways is precisely why claims written in 'means-plus-function' form must disclose the particular structure that is used to perform the recited function." *Blackboard, Inc. v. Desire2Learn, Inc.*, 574 F.3d 1371, 1385 (Fed. Cir. 2009). Here, the patentee simply did not meet the requirements of means-plus-function claiming.

II. Conclusion

As the moving parties, the burden is on Defendants to present clear and convincing evidence that the '385 Patent is indefinite. Defendants have met this burden by establishing that: there is no structure explicitly set out in the Patent corresponding to the means for recognizing the number of lines function; the inventor, after reviewing the Patent, could not identify what structure corresponds to this function and testified that "several possible circuits" could perform the function; Plaintiffs' technical expert identified several different devices and methods that could be used to perform the recognizing the number of lines function; and the remaining experts could not identify what structures were contained in Auto Line Number 30. Consequently, Defendants have established by clear and convincing evidence that one ordinarily skilled in the art would not understand the '385 Patent to disclose a particular structure corresponding to the means for recognizing the number of lines function.

Defendants having met their burden, the burden shifts to Plaintiffs to present evidence that a genuine issue of material fact exists. Plaintiffs have not met this burden. Plaintiffs have only the unsupported conclusions of Dr. von Herzen, which sometimes even contradict his own statements, to support the contention that the '385 Patent is not indefinite. However, Dr. von Herzen's own statements, as set out above, indicate that the scope of the invention has not been set out with "reasonable certainty" and clarity, as required by the Supreme Court's *Nautilus* decision. Consequently, it is

ORDERED that:

1. Defendants' Combined Motion for Summary Judgment of Invalidity and Non-Infringement [DE-221] is GRANTED.

2. Plaintiffs' claims are DISMISSED with prejudice.

3. All pending motions in all three cases are DENIED as moot.

4. The Court will enter separate judgments in each case.

5. These cases are CLOSED.

DONE and ORDERED in Miami, Florida, this 30th day of June, 2014.

Patricia A. Seitz

PATRICIA A. SEITZ
UNITED STATES DISTRICT JUDGE

cc: All Counsel of Record

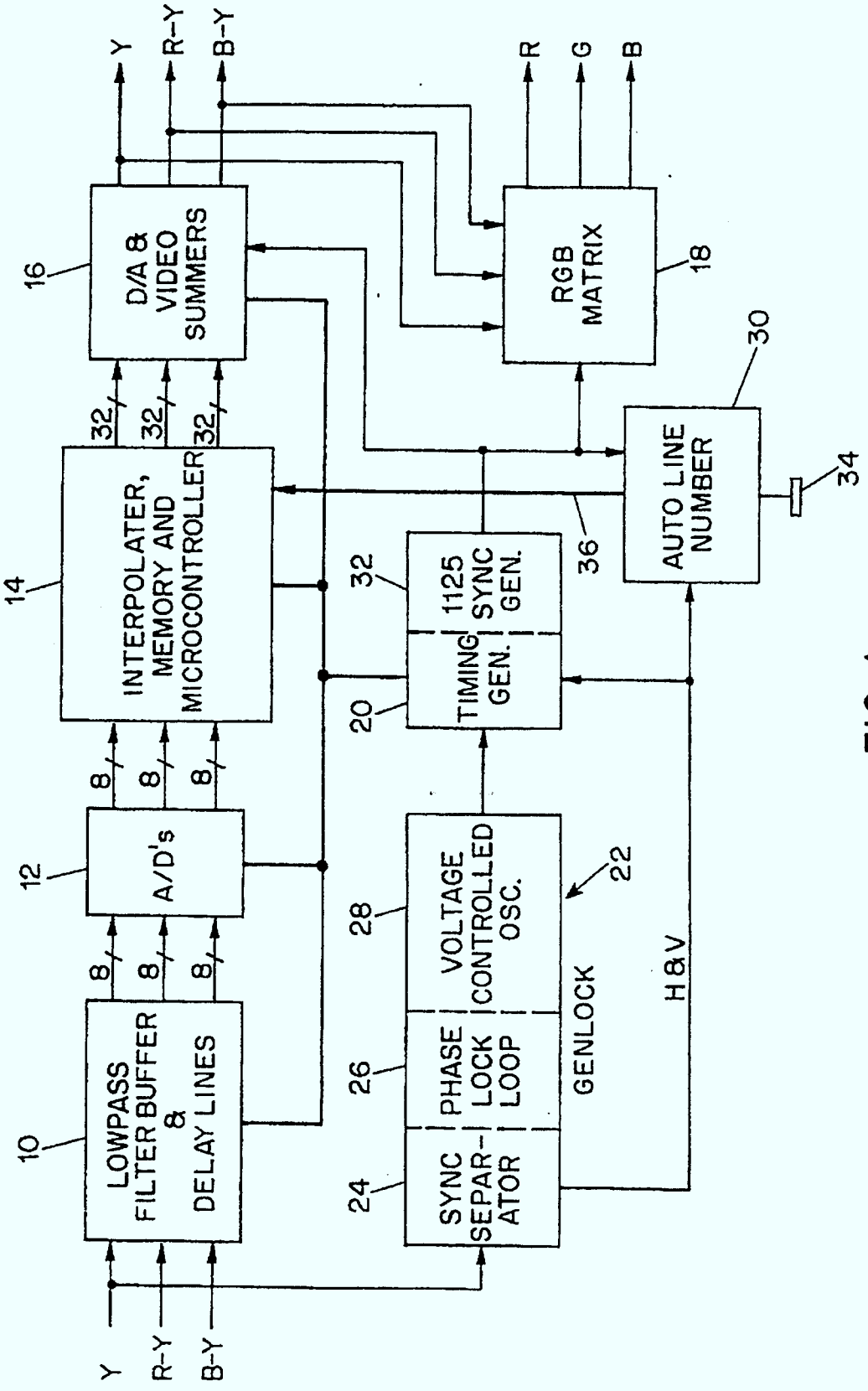

FIG. 1

Appendix A