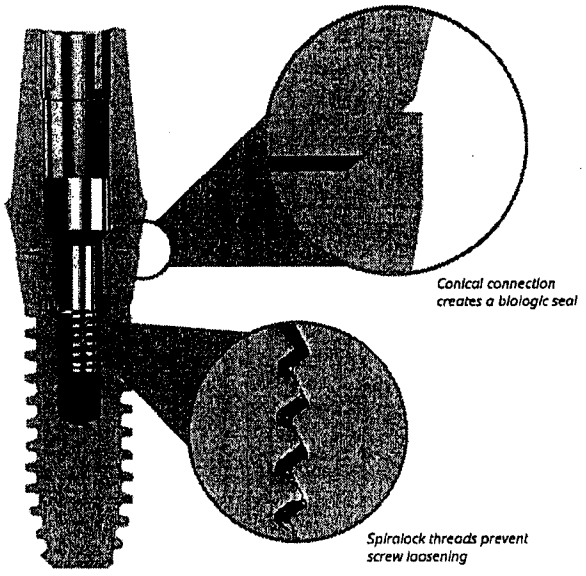

prosthetics

BioHorizons offers a broad array of abutments for a wide range of indications and patient conditions including the versatile 3in1One abutment and the complete Simple Solutions restorative kit. Our unique conical connection combined with the tightest machine tolerances in the industry create a biologic seal that eliminates the microgap issues seen with other systems. Abutment screw loosening is avoided by the Spiralock® thread design, the same design used in orthopedics and the aerospace industry.



Case 9:10-cv-80454-KAM Document 1-1 Entered on FLSD Docket 04/01/2010 Page 1 of 50

US005316476A

United States Patent [19]

Krauser

[11] Patent Number: 5,316,476

[45] Date of Patent: May 31, 1994

[54] **DENTAL IMPLANT WITH A LONGITUDINALLY GROOVED CYLINDRICAL SURFACE**

[76] Inventor: **Jack T. Krauser**, 3017 Embassy Dr., West Palm Beach, Fla. 33409

[21] Appl. No.: **901,510**

[22] Filed: **Jun. 19, 1992**

[51] **Int. Cl.**[5] **A61C 8/00**

[52] **U.S. Cl.** **433/173**

[58] **Field of Search** 433/173, 174, 175

[56] **References Cited**

U.S. PATENT DOCUMENTS

4,668,191	5/1987	Pfischka	433/174
4,790,753	12/1988	Frandera	433/174
4,793,808	12/1988	Kirsch	433/173
4,824,372	4/1989	Jörnéus	433/174
4,856,994	8/1989	Lazzara et al.	433/174
4,904,187	2/1990	Zingheim	433/173
4,932,868	6/1990	Linkow et al.	433/174
4,934,935	6/1990	Edwards	433/174
4,960,381	10/1990	Niznick	433/174
5,026,280	6/1991	Dürr et al.	433/175
5,026,285	6/1991	Dürr et al.	433/173
5,049,073	9/1991	Lauks	433/174
5,073,111	12/1991	Daftary	433/174
5,100,323	3/1992	Friedman et al.	433/173

FOREIGN PATENT DOCUMENTS

0445667	9/1991	European Pat. Off.	433/173
2636832	3/1990	France	433/174

OTHER PUBLICATIONS

Michael S. Block, DMD; Israel M. Finger, BDS; Mark G. Fontenot, DDS, Meng; John N. Kent, DDS-"-Loaded Hydroxylapatite-Coated and Grit-Blasted Titanium Implants in Dogs", *The International Journal of Oral and Maxillofacial Implants*, vol. 4, No. 3, 1989, pp. 219–295.

Primary Examiner—John J. Wilson
Attorney, Agent, or Firm—Harry W. Barron

[57] **ABSTRACT**

A dental implant for holding a dental prosthesis in place, after implantation within a hole drilled in bone, includes an upper surface, a generally cylindrical portion with a plurality of longitudinal shallow grooves, and an apical portion. The shallow circumferential grooves permit bone to grow entirely therein, so that the entire exposed surface of the implant has bone adhered thereto. The apical portion has a continuous truncoconical surface for diffusing the stresses into the bone. The head and uppermost portion of the cylinder have a smooth metal surface to retard the attachment of bone after implantation, while the remaining portion of the implant has either a roughened metal surface or a bioactive coating, such as hydroxylapatite, fluorapatite, or a bioactive carbon for the purpose of promoting the attachment of bone. A cap, having an outward expanding truncoconical head, is attached to the implant before implantation and left in place during a healing process to keep the upper portion of the implant free of tissues and ready for the attachment of a prosthesis.

23 Claims, 2 Drawing Sheets

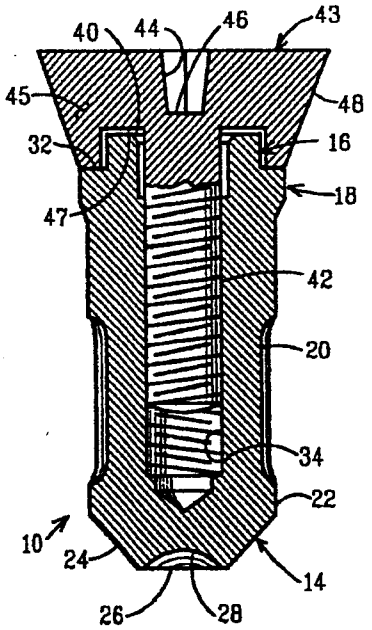



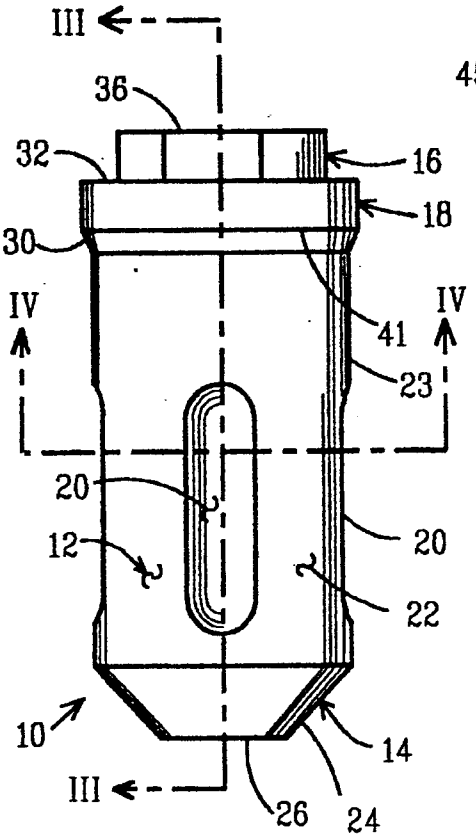

Fig. 1.

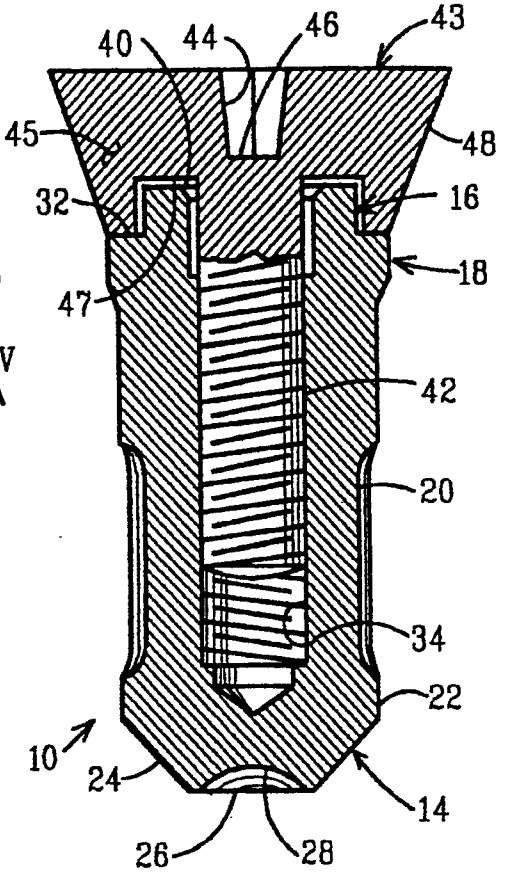

Fig. 3.

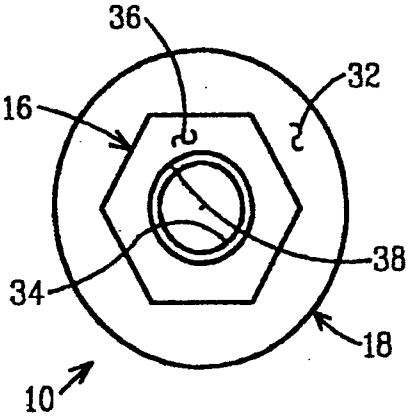

Fig. 2.

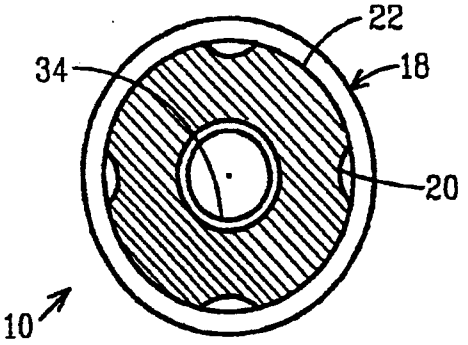

Fig. 4.

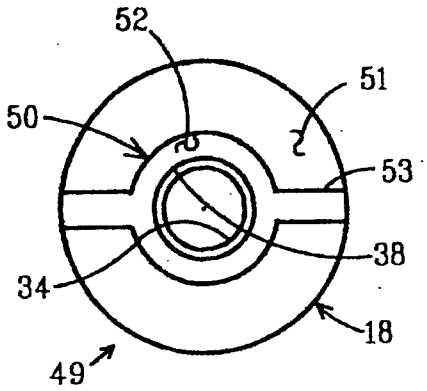

Fig. 5.

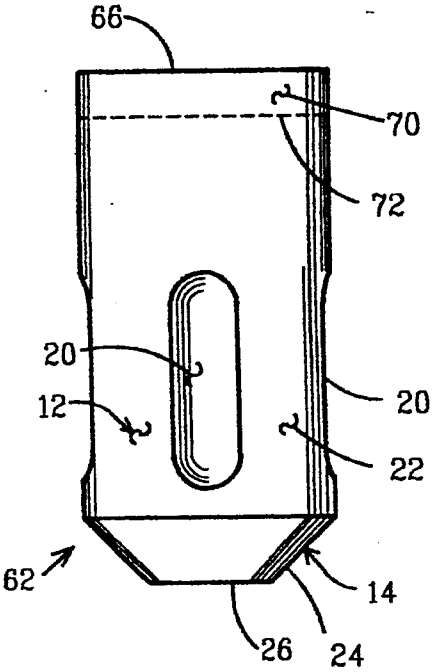

Fig. 7.

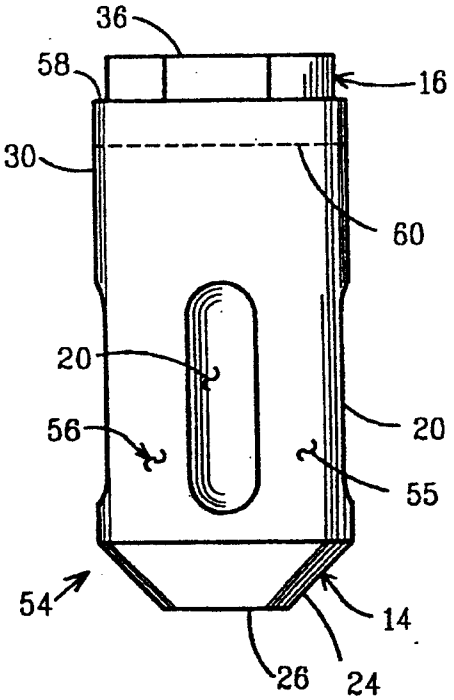

Fig. 6.

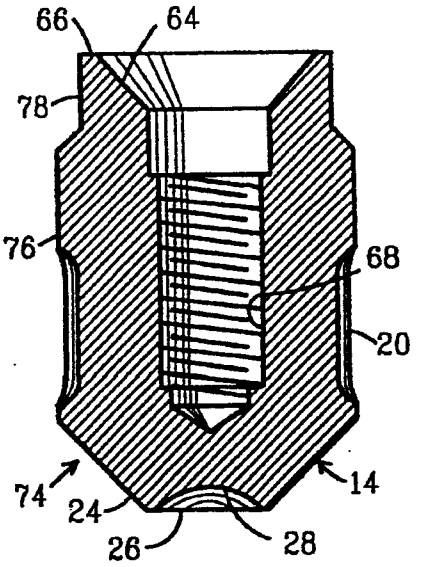

Fig. 8.

DENTAL IMPLANT WITH A LONGITUDINALLY GROOVED CYLINDRICAL SURFACE

BACKGROUND OF THE INVENTION

Field of the Invention

This invention relates to a dental implants used to form root analogues for the attachment of dental prostheses, and more particularly, to such a dental implant having no externally threaded surfaces, particularly configured for use in areas of relatively low bone density.

Background Information

Cylindrical dental implants have been in use since 1976, with several different designs being incorporated into dental therapy. A dental implant is used where there are missing teeth, to act as a root analogue supporting a dental prosthetic device fitting on top of the implant. Such an implant typically has an internal threaded hole, extending inward from a hexagonally shaped surface portion, to be used for the attachment of a dental prosthetic device. The prosthesis is then screwed onto the implant, with an intermediate portion of the prosthesis engaging the hexagonal portion of the implant to prevent rotation. The implant includes a generally cylindrical portion extending from the surface portion to an apical portion at the opposite end.

Some dental implants have helically threaded exterior cylindrical surfaces and are normally inserted in dense bone areas such as the front jaw. These implants are literally screwed into properly sized holes drilled into the bone. Other dental implants are generally cylindrical shaped, without threads, and are placed into holes previously drilled into the bone. These non-threaded implants have surface designs adapted for the attachment to new bone growth. Conventional non-threaded cylindrical implants have openings extending through their apical portions for the intended purpose of permitting a space to accommodate new bone growth. However, recent research has shown that new bone growth does not predictably fill these openings. For example, the article by M. S. Block, I. M. Finger, M. G. Fontenot, and J. N. Kent, entitled "Loaded Hydroxylapatite and Grit-Blasted Titanium Implants in Dogs", in The International Journal of Oral & Maxillofacial Implants, Volume 4, pages 219 through 25, clearly shows that new bone does not completely fill these openings.

Chemical coatings and textured surfaces are also used to promote the attachment of bone to the implant. The Block et al article evaluated the response of canine mandibular bone to loaded hydroxylapatite coated and grit blasted titanium dental implants, and concluded that while soft tissue pocket depths were not statistically different, and crestal bone loss was not significantly different, the hydroxylapatite coated implants had a statistically significant greater amount of bone contacting their axial and apical surfaces. The implants used in this study included cylindrical axial portions with apical portions having cross drilled radial holes extending therethrough, and hemispherical apical ends.

One important function of the dental implant is the transmission of forces, generated by chewing actions on the prosthesis, into forces applied to the bone surrounding the implant, at stress levels compatible with the growth and maintenance of health bone tissue. Such stresses stimulate the surrounding bone, and, in accordance to Wolff's Law, if bone is not stimulated it will atrophy, whereas, if bone is over stimulated it will resorb in a process in which the calcified matrix dissolves away, lowering the density of the bone.

DESCRIPTION OF THE PRIOR ART

U.S. Pat. No. 4,668,191, issued to Plischka on May 26, 1987, describes a jaw implant, preferably made of aluminum oxide, having a screw head portion, and a lower cylindrical portion with an external helical screw thread extending to a spherically rounded end. The screw head portion has a flat outer surface, from which a central square hole descends into the head to accommodate the shank of a replacement tooth holder. The portion of the screw head provided for embedment into cortical bone tissue is not smaller than the outer diameter of the helical thread, while the screw head portion provided to extend through the gingivae increases in diameter while descending from the outer surface, through a truncoconical portion, before reducing to the diameter of the portion provided for embedment into bone.

U.S. Pat. No. 4,790,753, issued to Frandera on Dec. 13, 1988, describes a jaw implant, preferably made of titanium, consisting of a hexagonal screw head portion, a cylindrical lower portion with a helical exterior screw thread, and an intermediate frustoconical portion providing a ledge surface at the lower edge of the hexagonal portion, tapering down in diameter to the helically threaded lower portion. The apical portion of the implant includes a tapered portion extending to the end from the screw thread, while a central hole and a transverse slot extend upward from the end. This hole, the slot, and their intersection provide sharp edges in the apical region.

In the Frandera implant, an internally threaded hole extends downward from the upper surface of the hexagonal portion, and a cap with a central hole is provided to be fastened over the hexagonal portion, by means of a screw engaging the internally threaded hole. Attached in this way, the cap extends downward to align with the ledge surface, preventing the growth of gingival tissue over this ledge and around the hexagonal portion during the waiting period between implantation and fitting the dental prosthesis. This waiting period is required to allow healing and strengthening of the connection between the implant and surrounding bone tissue before the forces generated using the prosthesis are applied to the implant.

U.S. Pat. No. 4,793,808, issued to Kirsch on Dec. 27, 1988, describes means for attaching a dental prosthesis to a cylindrical implant. An implant post, which may be made using a synthetic elastically deformable material, is screwed into a threaded hole in the top surface of the implant. A fastening head, with a conical portion extending upward into the prosthesis, forms an upper portion of the implant post. A threaded hole extends downward from the top of the conical portion for the attachment, with a screw, of a prosthesis, which is thereby aligned to and pressed over the conical portion. Alternately, angular adjustment of the prosthesis may be provided by screwing a ball into place over the conical portion, with the prosthesis being attached to a socket engaging the surface of the ball and being locked thereto by an additional screw. The implant shown by Kirsch has a cylindrical body extending downward to a hemispherical apex. A pair of openings having cylindrically rounded edges extends entirely through the lower

portion of the cylinder. The implant consists preferably of titanium, being highly polished on its upper end, while the lower part is roughened by knurling or sand blasting, or is coated with a titanium plasma process or with hydroxylapatite.

U.S Pat. No. 4,824,372, issued to Jörnéus et al on Apr. 25, 1989, describes a substantially tubular spacer used for the attachment of a single tooth restoration to a cylindrical implant. A screw, with a head pressing on an annular shoulder of the tubular spacer and a threaded portion engaging a threaded central hole of the implant, is used to fasten the tubular spacer to the implant. A tool provided for this fastening operation has a central part engaging a slot in the screw and an outer part engaging the tubular spacer, so that equal but counter-directed torques can be applied to the screw and spacer, thereby eliminating torsional loading of the implant during the installation of the spacer. The implant shown by Jörnéus et al is of the type having an external thread adapted to be screwed into bone. In the apical region, the Jörnéus et al implant includes a tapered section used to align the implant with the hole drilled in the surrounding bone to receive it, sharp edged flutes so that threads can be cut into the bone as the implant is screwed inward, a cylindrical cavity extending upward from a flat lower surface, and a number of apertures extending radially through to this cavity from the outer surface.

U.S. Pat. No. 4,932,868, issued to Linkow, et al on Jun. 12, 1990, describes an implant having an external threads with flutes extending between a head and an unthreaded apical portion. The apical portion also includes a tapered portion and a flat bottom from which a cylindrical cavity extends upward. Slots are cut through the lower part of the threaded portion and the upper part of the unthreaded apical portion, extending into the cylindrical cavity. Edges of these slots form surfaces for cutting threads into the surrounding bone, and the slots carry bone chips downward and inward, so that they are directed at the base of the hole bored in the bone.

U.S. Pat. No. 4,934,935, issued to Edwards on Jun. 19, 1990 describes the use of an anchor, or cylindrical implant, together with an intermediate transmucosal spacer member for mounting a dental prosthesis with a post. The transmucosal spacer and the post constitute, in effect, an axially offset extension of the implant, the angle of offset of the post axis being variable and selectable by relative rotation of parts at a bonded and preferably keyed plug and socket connection between the spacer member and one end of the implant. Several implants are shown, each of which has a cylindrical shank portion above a helically threaded portion. The apical end of the implant is a shallow dome having sharp edges below a annular groove, and parallel flats, to interlock with bone. The apical ends and threaded portions of the implants further have one or more holes extending therethrough.

U.S. Pat. No. 4,960,381, issued to Niznick on Oct. 2, 1990 describes an implant having an external helical thread and an internal threaded hole, with an internal structure at an end of the internal hole for engaging a rotationally driving insertion tool. The distal, or apical, end has a cylindrical hole extending upward to intersect with a radial hole extending through the part.

U.S. Pat. No. 5,026,280, issued to Dürr et al on Jun. 25, 1991, describes a method for mounting a conditionally removable denture, or prosthesis, on a threaded post extending through a centering collar to be fastened into a screw assembly in turn fastened into a cylindrical implant. The implant shown is of a type not having external helical threads, with a hemispherical apical end and a pair of vertically oriented parallel slots extending through the lower part of the cylindrical portion. The ends of the slots are cylindrically rounded.

U.S. Pat. No. 5,026,285, issued to Dürr et al on Jun. 25, 1991, describes the use of a spacing element having two external threaded surfaces, the first of which engages the internal threads of a cylindrical dental implant, and the second of which engages a ring element fastened on top of the implant. A tool for fastening these elements in place includes concentric sleeves, one of which engages a head of the spacing element, while the other engages the ring element.

U.S. Pat. No. 5,100,323, issued to Friedman et al on Mar. 31, 1992, describes a dental implant having an unthreaded cylindrical body with a hexagonal head portion extending outward form an annular base. A generally cylindrical abutment with a face having a female hexagonal surface, configured to engage the head portion of the implant, is provided for use in the attachment of a prosthetic device by means of a screw extending through an unthreaded hole in the abutment to engage a threaded hole in the implant. The engagement of the hexagonal surfaces is used to prevent rotation of the abutment relative to the implant. The apical portion of the implant is similar to that described in U.S. Pat. No. 5,026,280 to Dürr.

The types of implants of the prior art having external screw threads, adapted to be screwed into place and to form an internally threaded surface in the bone as they are so installed, have been shown to be relatively unsuitable for use, particularly in areas of lower bone density. Examples of implants having such threads are found in U.S. Pat. Nos. 4,668,191 to Plischka, 4,790,753 to Fradera, 4,932,868 to Linkow et al, 4,934,935 to Edwards, and 4,960,381 to Niznick. The unthreaded implants of the prior art have all included openings through the wall which creates problems when the bone attempts to grow thought the opening. Further, the bottom of the implant devices have not been designed to distribute the forces on the implant, such as from chewing, evenly into the bone in a manner best able to prevent atrophy or resorption of the bone. A dental implant device overcoming these problems is needed.

SUMMARY OF THE INVENTION

In accordance with one aspect of the invention, there is provided an integral dental implant including an upper end having an upper surface and an apical end, having a lower surface, opposite to the upper surface. The apical end further has a truncoconical surface extending from the lower surface toward the upper surface, the truncoconical surface being continuous and increasing in diameter along an axis from the lower surface to the upper surface. The implant further includes an generally cylindrical portion extending between the upper end and the apical end, which includes a plurality of longitudinally extending grooves in the surface thereof. Finally, the implant includes attachment means extending axially inward from the upper surface.

BRIEF DESCRIPTION OF THE DRAWINGS

Preferred embodiments or variations of the subject invention are hereafter described, with specific reference being made to the following Figures, in which:

FIG. 1 is a side elevation of a cylindrical dental implant made in accordance with the present invention;

FIG. 2 is a top elevation of the implant of FIG. 1;

FIG. 3 is a longitudinal cross-sectional view of the implant of FIG. 1, taken as indicated by section lines III—III in FIG. 1, showing in addition an attached cover screw;

FIG. 4 is a transverse cross-sectional view of the implant of FIG. 1, being taken as indicated by section lines IV—IV in FIG. 1;

FIG. 5 is a top elevation of an implant having an alternate head structure;

FIG. 6 is a side elevation of an alternative version of a cylindrical dental implant, without a flange between a head portion and a generally cylindrical portion, made in accordance with the present invention;

FIG. 7 is a side elevation of a second alternative version of a cylindrical dental implant, with a countersunk central hole instead of a head portion, also made in accordance with the present invention; and

FIG. 8 is a longitudinal cross-sectional view of a third alternative version of a cylindrical dental implant, also made in accordance with the present invention, having a countersunk central hole and a generally cylindrical portion with an enlarged diameter.

DETAILED DESCRIPTION

FIGS. 1 through 4 show a first version of a dental implant made in accordance with the present invention, with FIGS. 1 and 2 being, respectively, side and top elevational views thereof, while FIGS. 3 and 4 are cross-sectional views taken asindicated, respectively, by lines III—III and IV—IV of FIG. 1.

Referring first to FIG. 1, a dental implant 10, which is preferably made from titanium or a titanium alloy, includes a generally cylindrical portion 12, an apical portion 14, a hexagonal head 16 (the shape of which is more clearly shown in FIG. 2), and a flange 18 between generally cylindrical portion 12 and head 16. Cylindrical portion 12 includes a number of longitudinally extending grooves 20, which provide gentle transitions in the shape of the surface. The shape of each groove 20 is shown particularly in the cross-sectional views of FIGS. 3 and 4. Generally, each groove 20 is shaped as an arcuate cylinder section extending into the surface 22 of cylindrical portion 12 and orientated parallel to the axis of cylindrical portion 12. The ends of each groove 20 are spherically rounded to provide a gentle transition in surface shape in both the longitudinal direction and the circumferential direction. Grooves 20 extend only slightly, if at all, into the upper half 23 of cylindrical portion 12, where a smooth cylindrical surface is provided without interruption.

As shown in FIG. 3, apical portion 14 includes a truncoconical surface 24 extending between cylindrical surface 22 and a flat annular bottom surface 26. A spherically rounded dimple 28 extends centrally into bottom surface 26. Flange 18 extends diametrically outward above cylindrical surface 22 and is connected to cylindrical surface 22 by a transition region 30. Flange 18 has a flat annular ledge 32 around hexagonally shaped head 16. Dental implant 10 also includes an internally threaded attachment hole 34 extending centrally inward from an upper surface 36 of head 16. The upper parts of attachment hole 34 include a cylindrical counterbore hole 38 and a small countersink 40.

In preferred usage, dental implant 10 is used to provide a root analogue to support an attached dental prosthetic device (not shown) in the rearward portion of the mouth, where bone is less dense than in the front of the jaw. The dental prosthetic device may be, for example, a single replacement tooth or a structure having two or more replacement teeth. In preparation for the insertion of implant 10, a hole is drilled in the bone by conventional techniques. Then implant 10 is inserted into the hole, with apical portion 14 being directed inward, and the insert is pushed into place. As noted above, grooves 20 do not extend into the upper portion of cylindrical portion 22. The reason for this structure is to provide a tight fit can between the upper surface of the implant and the hole drilled in the bone. A tight fit in this region blocks a potential pathway through which bacteria and other agents of infection might otherwise gain access to the hole drilled in the bone before the healing process is completed. An ungrooved length of 3 to 4 millimeters in the upper portion of cylindrical portion 12 is adequate for this purpose.

While the language used herein, along with the orientation of the Figures, may imply that hexagonal head 16 is an upwardly directed feature, it is to be understood that implant 10 can be used in both mandibular and maxillary applications, with the hexagonal head 16 always being directed outwardly from a hole drilled in the bone and apical portion 14 always facing the bottom of the hole.

After a suitable healing period, which provides time for new bone tissue to grow along various surfaces of implant 10, a dental prosthesis is attached to the top surface 36 of hexagonally shaped head 16 by means of a screw engaging attachment hole 34. The hexagonal shape of head 16 is provided to prevent rotation of the prosthesis relative to implant 10. The prosthesis, or an attachment device between the prosthesis and implant 10, has a cavity which engages head 16 when it is held downward by a screw engaging attachment hole 34. For example, the prosthesis or attachment device may include a hexagonal cavity fitting over head 16, extending to ledge 32 of flange 18.

The establishment and maintenance of healthy bone tissue in attachment with, or at least in very close proximity to, various surfaces of implant 10 is key to the success of any implant operation. To promote proper bone development, all surfaces below lower edge 41 of flange 18, including transition surface 30, cylindrical portion 12, and apical portion 14, are coated with a bioactive coating which attracts the growth of body tissue. For example, in a preferred embodiment, hydroxylapatite may be used. Alternatively, fluorapatite, bioactive carbons, and other bioactive materials may be used to coat the surfaces below edge 41. Instead of a bioactive coating, a controlled roughening of the metal surface may be used to promote adjacent bone attachment. According to the Block et al article, a titanium alloy (Ti-6Al-4V) can be grit blasted with 24 grit alumina particles at a pressure of 80 pounds per square inch for 10 seconds to create 25 to 50 micron irregularities, forming a surface suitable for this purpose. An alternate method for producing a suitable surface roughness on a titanium part is the flame spraying of titanium from a plasma.

Since it has been shown through animal studies that bone resorbs away from highly polished metal, hexagonal head 16 and flange 18 above lower edge 41 have highly polished surfaces without the surface roughening or coating described above. These upper surfaces of implant 10 are thus reserved for the adjacent growth of gingival tissue and for mating structures extending from the dental prosthesis or an attachment device between the prosthesis and implant 10. While U.S. Pat. No. 4,793,808 to Kirsch teaches the use of a titanium implant which is highly polished on its upper end, with a roughened or coated lower end, the advantage of the present invention is that the level of bone attachment is specifically limited by extending the polished metal of implant 10 down its side. A suitable demarcation between bone and gingival tissue is provided if the height, in the axial direction, of flange 18 is between 0.5 and 1.0 millimeter. Head 16 preferably extends between 0.7 millimeter and 1.5 millimeters above ledge 32, with 0.7 millimeter being the conventional distance, while 1.5 millimeters provides better retention of a single tooth prosthesis.

Since studies have shown that bone does not fully grow through radial cavities extending entirely through dental implants, cavities entirely through the implant are not included in implant 10. In the prior art implants, the material of the implant forms a stress shielded central section, to which the stresses produced by mastication and other forces acting on the implant are not transmitted at a level sufficient for the growth and maintenance of healthy bone tissue in accordance with Wolff's Law. To overcome these problems of the prior art, cylindrical surface 22 of implant 10 remains generally continuous, except for the depressed regions formed by shallow grooves 20, and truncoconical surface 24 remains continuous. The general design of implant 10 remains one of relatively gentle changes in surface shapes, without deep slotted grooves, holes, and right angle edges.

Truncoconical surface 24 is of a shape which can be easily produced by machining or forging apical end 14 of implant 10. Also, the truncoconical shape mates with the end of a hole which can be easily drilled into bone with a properly shaped drill, and so that a close fit can be easily obtained. More importantly, truncoconical surface 24 transforms vertical forces on implant 10, caused by mastication, into outwardly radiated stresses in the adjacent bone tissue, thereby maintaining even stress levels compatible with the growth and maintenance of healthy bone tissue. While a full conical shape could be used to accomplish the same force transformation, it is less desirable than the truncoconical shape because of the additional depth required for a complete conical shape.

Apical end dimple 28 allows hemodynamic back pressure to be used to provide a venting area during the seating of implant 10 in a cavity drilled in bone. Thus, apical end of implant 10 demonstrates advantages over the prior art hemispheric end for an implant without external threads shown, for example, in U.S. Pat. Nos. 4,793,808 to Kirsch and 5,026,280 to Dürr et al and 5,100,323 to Friedman. In other prior art examples of implants having external threads, a truncoconical apical surface is used for alignment with a hole drilled in the bone, while vertical forces are transmitted between the implant and surrounding bone through the threads of the implant, rather than the bottom of the implant.

After the implantation of implant 10, bone tissue easily grows entirely into the spaces provided by shallow grooves 20 along generally cylindrical portion 12. Bone occupying the space within groove 20 is particularly useful in resisting any torque which might be applied about the axis of implant 10. However if significant stress is applied to the bone, it may fracture. In implant 10, the large angle between the interior surface of groove 20 and surface 22 of cylindrical portion 12, (which is significantly closer to 180 degrees than ninety degrees), results in no sharp angular stress points in the new bone growth. To further eliminate the bone stress, the edge between groove 20 and surface 22 may be rounded. Furthermore, the apical ends of grooves 20, when grooves 20 are filled with bone tissue, prevent outward motion of implant 10, which might occur, for example, if the dental prosthesis attached to implant 10 became adhered to a sticky food substance. Thus, the surfaces of cylindrical portion 12 and apical portion 14, without a radial opening extending therethrough, have maximized surfaces for the development of adjacent bone tissue, and optimized geometries for the transfer of forces to adjacent bone tissue.

Referring again to FIG. 3, in accordance with a preferred version of the invention, implant 10 is supplied to the patient with a threaded portion 42 of cover screw 43 fastened in engagement with threaded hole 34. Cover screw 43 is fastened into implant 10 by means of a tool (not shown) engaging a non-circular aperture 44 in head 45 of screw 43. Aperture 44, which may be, for example, generally hexagonal in transverse shape, preferably has sides tapered inward so that inner surface 46 of aperture 44 is smaller than the opening of the aperture. In this way, the axial force provided when the tool (not shown) is pushed into aperture 44 is multiplied by a wedging action to produce a relatively high level of opposing radial forces, which facilitate handling screw 43 and implant 10 attached thereto by means of a tool (not shown) without screw 43 falling off the tool. Because of the difficulties in positioning an implant within the mouth of a patient, the facilitation of such handling is particularly important. Head 45 of cover screw 43 includes a recessed cylindrical area 47, which forms clearance spaces around head 16 of implant 10 so that screw head 44 is clamped against annular ledge 32 around implant head 16. Head 45 also includes a truncoconical outer surface 48, which is tapered to reduce in diameter in the direction in which threaded portion 42 extends.

In accordance with a preferred method of usage, implant 10 is installed in suitable hole drilled in the bone of a patient. During the installation, screw 43 remains firmly attached in hole 34. Screw 43 is left in place during the healing process, during which the growth of bone produces an implant structure strong enough to withstand the forces of mastication. After the healing process is complete, screw 43 is removed using a tool (not shown) imparting a rotational torque through aperture 44. After screw 43 is removed, a suitable dental prosthesis is installed using another screw (not shown) by conventional dental techniques. Using screw 43 in this way retains the surfaces of head 16 and ledge 32 free from tissue and ready for the subsequent attachment of a dental prosthesis.

While the outer surfaces of screw head 45 are smooth metallic surfaces which do not encourage the adjacent growth of bone tissues or of gingival tissues, in some applications such growth will occur, presenting a potential problem in the removal of screw 43. To minimize this problem, truncoconical outer surface 48 is pro-

vided, whereby the outward axial motion of screw 43 pulls surface 48 uniformly away from such tissues. The design of screw head 45, thus, has a significant advantage over conventional protection caps of the prior art which lack the truncoconical outer shape of a protecting cover. It is understood that the features described above with reference to screw 43 can be applied separately to a screw used with the traditional type of implant having a threaded hole for an attachment screw and cover used during the healing process following insertion of a dental implant.

FIG. 5 is a top view of a cylindrical dental implant 49 having a head 50, extending above an upper surface 51 of flange 18 to an upper surface 52, with a different shape than that of head 16 of implant 10. Since the purpose of head 16 or 50 is basically the prevention of rotation of the prosthesis, or attachment device, relative to the implant, various types of surfaces for providing one or more features for keying engagement, radially displaced from center of threaded attachment hole 34, may be used for the head 16 or 50 of an implant. Implant 49 has two such features in the form of outward extending raised keys 53. Thus, implant 49 is an alternative form, which may otherwise have features similar or identical to those of implant 10, built in accordance with the present invention.

Referring now to FIG. 6, implant 54 is shown as another variation of the subject invention. In implants 10 and 49, flange 18 was provided to enlarge the area to which a dental prosthesis may be attached In some applications, this enlarged area is not required, so dental implant 54 is shown without an outward extending flange 18. In implant 54, a cylindrical surface 55 of a generally cylindrical portion 56 is extended to a ledge 58 below hexagonal head 16. Smooth, polished metal surfaces are provided above a level indicated by dashed line 60, while roughened metal surfaces or a bioactive surface coating, such as hydroxylapatite, are provided below line 60. To provide a suitable interface between bone and gingival tissue along the surface of implant 54, polished metal surfaces extend downward between 0.5 and 1.0 millimeter from ledge 58. Other aspects of implant 54, such as grooves 20 and apical portion 14, are as previously described portions of implant 10.

FIG. 7 shows an implant 62, which is another version of an implant built in accordance with the present invention. In implant 62, head 16 of implant 54 is eliminated, and, as shown in another alternative version of FIG. 8, a countersink 64 is provided to extend from an upper surface 66 into internally threaded hole 68. While the previously discussed implants 10, 49, and 54 include specific structure for preventing the rotation of a single tooth prosthesis attached to a single implant, implant 62 lacks that structure. Rather, implant 62 is designed for use where two or more implants are to be used for the attachment of a prosthesis including two or more replacement teeth. Countersink surface 64 can be used to center a prosthesis or attachment device fastened in place with a screw engaging threaded hole 68. Polished metal surfaces extend across the annular upper surface 66 of implant 62 and down cylindrical surface 70 for a distance preferably between 0.5 and 1.0 millimeter to a line 72, which indicates the beginning of a roughened or coated surface, as previously described with respect to implant 54 of FIG. 6.

FIG. 8 shows an implant 74, which is another version of an implant built in accordance with the present invention. Implant 74 has a generally cylindrical section 76 axially shortened and radially enlarged, to provide a suitable insert for use in the rear portions of the jawbone, where the bone is relatively wide, but where underlying nerves prevent drilling deeply. The countersunk attachment screw hole used in implant 62 is also used in implant 74. The diameter of the upper portion 78 of implant 74 is not increased with the increase in the diameter of section 76. Upper surface 66 has a smooth metallic surface, which extends down at least a portion of the side of upper portion 78 to retard the attachment or closely adjacent growth of bone tissue, while the remainder of the external surfaces of implant 74 are roughened or coated with a bioactive coating to promote such growth.

Screw 43, shown in FIG. 3, may also be applied to implants 62 and 74, with head portion 45 of screw 43 being sized to cover upper surface 66, keeping this surface 66 free from gingival and bone tissue during the healing process. In this application, recessed cylindrical area 47 is not required, although it does not interfere with the function of screw 43.

Along with the variations described above among types of implants made in accordance with the present invention, it is desirable to provide variations in the size of implants. Different sizes of implants are needed for different applications, as determined by factors such as the size of bones and dental features within the mount of a patient and by the specific location for which a prosthesis is needed. Implants 10, 49, 54, 62, and 74 can collectively be made in several diameters within a range typically between 2.9 millimeters and 6.0 millimeters. Within this range of diameters, suitable grooves 20 have a radius, as seen in a cross-sectional view such as FIG. 4, of 0.9 millimeter and are cut or formed to a depth of 0.3 millimeter below the surrounding cylindrical surface 22. Implants having diameters between, for example, 4.0 and 6.0 millimeters may have six equally spaced grooves 22, while implants having smaller diameters have four equally spaced grooves. The implants 10, 49, 53, and 62 can also be made in several lengths typically within a range between 4 millimeters and 20 millimeters.

The various types of implants described above can also be used to provide variations in the diameter of the generally cylindrical portion extending into the bone, as required to accommodate use in various types of bone structures, while the upper portion of the implant remains at a constant diameter to accommodate standard fittings for a prosthesis. For example, the diameter of the upper portion of the implant may remain at 4 millimeters, while the diameter of the lower portion varies between 2.9 millimeters and 6.0 millimeters, extending outward or inward from the upper portion.

It is to be understood that various other combinations of the features described herein are both useful and within the scope of this invention. For example, the outward-extending cylindrical portion of implant 74, shown in FIG. 8, can be usefully applied to an implant having a hexagonal head, like that of implant 10, shown in FIGS. 1 through 4.

What is claimed is:

1. An integral dental implant comprising:

an upper end having an upper surface;

an apical end, including a lower surface, opposite to said upper surface, and a trunconical surface extending from said lower surface toward said upper surface, said truncoconical surface being continu-

ous and increasing in diameter along an axis from said lower surface to said upper surface;

a generally cylindrical portion extending between said upper end and said apical end including a plurality of longitudinally extending grooves in the surface thereof; and

attachment means extending axially inward from said upper surface,

wherein said upper end further includes a head extending downward from said lower surface to an outward extending ledge, said head having means for preventing axial rotation of a member affixed thereto;

wherein said generally cylindrical portion extends between said truncoconical surface and said outward extending ledge;

wherein said head, said outward extending ledge, and an upper portion of said generally cylindrical portion, adjacent to said outward extending ledge, have a smooth metallic surface; and

wherein said apical end and the remaining portion of said generally cylindrical portion includes a bioactive coating.

2. The dental implant of claim 1, wherein said bioactive coating is a coating selected from a group consisting of hydroxylapatite, fluorapatite, and bioactive carbons.

3. The dental implant of claim 1 wherein said upper cylindrical portion includes a flange adjacent disposed between said head and said lower cylindrical portion and extending radially outward therefrom, said outward extending ledge forming an upper surface of said flange, said flange extending downward and inward from said ledge to said lower cylindrical portion.

4. The dental implant of claim 3 wherein said head, said outward extending ledge and said flange have smooth metallic surfaces and said lower cylindrical portion and said apical end have bioactive coating.

5. The dental implant of claim 4 wherein said bioactive coating is a coating selected from a group consisting of hydroxylapatite, fluorapatite, and bioactive carbons.

6. An integral dental implant comprising:

an upper end having an upper surface;

an apical end, including a lower surface, opposite to said upper surface, and a truncoconical surface extending from said lower surface toward said upper surface, said truncoconical surface being continuous and increasing in diameter along an axis from said lower surface to said upper surface;

a generally cylindrical portion extending between said upper end and said apical end including a plurality of longitudinally extending grooves in the surface thereof; and

attachment means extending axially inward from said upper surface,

wherein said upper end further includes a heat extending downward from said upper surface to an outward extending ledge, said head having means for preventing axial rotation of a member affixed thereto;

wherein said generally cylindrical portion extends between said truncoconical surface and said outward extending ledge;

wherein said head, said outward extending ledge, and an upper portion of said generally cylindrical portion, adjacent to said outward extending ledge, have a smooth metallic surface; and

wherein said apical end and the remaining portion of said generally cylindrical portion have roughened surfaces.

7. The dental implant of claim 6 wherein said upper cylindrical portion includes a flange adjacently disposed between said head and said lower cylindrical portion and extending radially outward therefrom, said outward extending ledge forming an upper surface of said flange, said flange extending downward and inward from said ledge to said lower cylindrical portion.

8. The dental implant of claim 7 wherein said head, said outward extending ledge and said flange have smooth metallic surface and said lower cylindrical portion and said apical end have roughened surfaces.

9. An integral dental implant comprising:

an upper end having an upper surface;

an apical end, including a lower surface, opposite to said upper surface, and a truncoconical surface extending from said lower surface toward said upper surface, said truncoconical surface being continuous and increasing in diameter along an axis from said lower surface to said upper surface;

a generally cylindrical portion extending between said upper end and said apical end including a plurality of longitudinally extending grooves in the surface thereof; and

attachment means extending axially inward from said upper surface.

wherein said upper end further includes a head extending downward from said upper surface to an outward extending ledge, said head having means for preventing axial rotation of a member affixed thereto;

wherein said dental implant further includes an upper diameter than said head;

wherein said dental implant further includes an upper cylindrical portion and a transition portion, said upper cylindrical portion having a diameter of said outward extending ledge and extending longitudinally between said outward extending ledge and said transition portion; and said transition portion extending between said upper cylindrical portion and said generally cylindrical portion.

10. The dental implant of claim 9 wherein said head, said outward extending ledge, and an upper part of said upper cylindrical portion have smooth metallic surface and said generally cylindrical portion and said apical end have a bioactive coating.

11. The dental implant of claim 10 wherein said bioactive coating is a coating selected from a group consisting of hydroxylapatite, fluorapatite, and bioactive carbons.

12. The dental implant of claim 9 wherein said head, said outward extending ledge and an upper part of said upper cylindrical portion have smooth metallic surface and said generally cylindrical portion and said apical end have roughened surfaces.

13. A integral dental implant comprising:

an upper surface;

a first cylindrical surface extending downward from said upper surface;

a second cylindrical surface extending downward from said first cylindrical surface;

a plurality of circumferentially spaced grooves extending in a longitudinal direction around said second cylindrical surface, said grooves extending along the length of said second cylindrical surface;

an annular lower surface;

a continuous truncoconical surface extending between said lower surface and said second cylindrical surface;

a dimple extending within said lower surface; and

an attachment hole extending within said upper surface;

said second cylindrical surface, said grooves, said annular lower surface, and said dimple being processed to encourage bone adhesion thereto and said upper surface and first cylindrical surface being processed to retard bone adhesion thereto;

said first cylindrical surface extends 0.5 to 1.0 millimeters in an axial direction and is coextensive with said second cylindrical surface.

14. The dental implant of claim 13 further including a head extending axially outward from said upper surface, said head being processed to retard bone adhesion thereto.

15. The dental implant of claim 13 wherein said first cylindrical surface extends radially outward from said second cylindrical surface.

16. The dental implant of claim 13 wherein said second cylindrical surface extends radially inward from said first cylindrical surface.

17. The dental implant of claim 13 wherein said second cylindrical surface, said grooves, said annular lower surface, and said dimple are coated with a bioactive coating and said upper surface and first cylindrical surface are smooth metal.

18. The dental implant of claim 13 wherein said second cylindrical surface, said grooves, said annular lower surface, and said dimple are coated with a coating selected from a group consisting of hydroxylapatite, fluorapatite, and bioactive carbons, and said upper surface and first cylindrical surface are smooth metal.

19. The dental implant of claim 13 wherein said second cylindrical surface, said grooves, said annular lower surface, and said dimple are roughened metal and said upper surface and first cylindrical surface are smooth metal.

20. The dental implant of claim 13 wherein said grooves extend within said second cylindrical surface by an amount less than the distance between said second cylindrical surface and said attachment hole.

21. The dental implant of claim 20 wherein said grooves are generally cylindrical sections with spherical section ends.

22. The dental implant of claim 21 wherein the angle between said second cylindrical surface and said grooves is substantially greater than ninety degrees and less than 180 degrees.

23. The dental implant of claim 13 wherein said grooves extend downward from a longitudinal location at least three millimeters below an upper edge of said second cylindrical surface.

* * * * *

US005316476B1

REEXAMINATION CERTIFICATE (2924th)

United States Patent [19] [11] **B1 5,316,476**

Krauser [45] Certificate Issued **Jun. 18, 1996**

[54] **DENTAL IMPLANT WITH A LONGITUDINALLY GROOVED CYLINDRICAL SURFACE**

[76] Inventor: **Jack T. Krauser**, 3017 Embassy Dr., West Palm Beach, Fla. 33409

Reexamination Request:
No. 90/003,701, Jan. 24, 1995

Reexamination Certificate for:

Patent No.:	**5,316,476**
Issued:	**May 31, 1994**
Appl. No.:	**901,510**
Filed:	**Jun. 19, 1992**

[51] **Int. Cl.**[6] **A61C 8/00**
[52] **U.S. Cl.** **433/173**
[58] **Field of Search** 433/173, 174, 433/175

[56] **References Cited**

U.S. PATENT DOCUMENTS

4,988,298	1/1991	Lazzara et al.	433/173
5,006,068	8/1991	Lee et al.	433/173
5,049,072	9/1991	Lueschen	433/173

OTHER PUBLICATIONS

Minimatic Implant Technology Inc. "Catalog of: Implants Prosthetic Components etc." May 1992.

Core–Vent Corp 1990 Product Catalog, Jul. 1990.

Obutment Osseointegrated Implant System, Aug. 1989.

Core–Vent Corp. "HA–Coated Screw Implants–The Inside Story".

Core Vent Corp. advertisement, Feb. 1991.

Bio–Vent literature.

Osseotite literature, "Osseotite: The Next Dimension in Implant Evolution".

L. A. Wolfe, PhD, et al. "Bone Response to a Matched Modulus Endosseous Implant Material", The International Journal of Oral & Maxillofacial Implants, 1989.

D. Siegele, "Numerical Investigations of the Influence of Implant Shape on Stress Distribution in the Jawbone", The International Journal of Oral & Maxillofacial Implants, 1989.

R. J. Lazzara, DMD; "Restorative Advantages of the Coronally Hexed Implant," Compend. Continuing Educ. Dent., vol. XII, No. 12.

M. S. Block, DMD, et al., "Use of the Integral Implant for Overdenture Stabilization," International Journal of Oral & Maxillofacial Implants, 1990.

R. D. Sager, DMD, et al., "Implant–retained Precision Two–stage Single–tooth Replacement" Journal of Oral Implantology, vol. XVII, No. 2, 1991.

"Dimples V. Holes in the Implant Body" Technical Monograph 9.

Boskovic, DDS, et al., "Solving the Problem of Violated Intermaxillary Space Caused by Poor Pre–planning and Improper Placement of Endosseous Implants:A Case Report", Journal of Oral Implantology, vol. XVIII, No. 1, 1992.

(List continued on next page.)

Primary Examiner—Nicholas D. Lucchesi

[57] **ABSTRACT**

A dental implant for holding a dental prosthesis in place, after implantation within a hole drilled in bone, includes an upper surface, a generally cylindrical portion with a plurality of longitudinal shallow grooves, and an apical portion. The shallow circumferential grooves permit bone to grow entirely therein, so that the entire exposed surface of the implant has bone adhered thereto. The apical portion has a continuous truncoconical surface for diffusing the stresses into the bone. The head and uppermost portion of the cylinder have a smooth metal surface to retard the attachment of bone after implantation, while the remaining portion of the implant has either a roughened metal surface or a bioactive coating, such as hydroxylapatite, fluorapatite, or a bioactive carbon for the purpose of promoting the attachment of bone. A cap, having an outward expanding truncoconical head, is attached to the implant before implantation and left in place during a healing process to keep the upper portion of the implant free of tissues and ready for the attachment of a prosthesis.

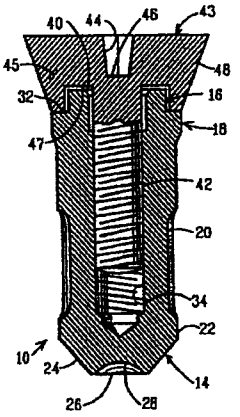

OTHER PUBLICATIONS

S. D. Cook et al., "The Effect of Surface Macrotexture on the Mechanical and Histologic Characteristics of Hydroxylapatite–coated Dental Implants", Journal of Oral Implantology, vol. XIX, No. 4, 1993.

"A Complete Line of Implants . . . " Steri–Oss Inc. Brochure, 1992.

REEXAMINATION CERTIFICATE ISSUED UNDER 35 U.S.C. 307

NO AMENDMENTS HAVE BEEN MADE TO THE PATENT

AS A RESULT OF REEXAMINATION, IT HAS BEEN DETERMINED THAT:

The patentability of claims **1–23** is confirmed.

* * * * *

US005415545A

United States Patent [19]

Shaw

[11] Patent Number: 5,415,545

[45] Date of Patent: May 16, 1995



[54] **DENTAL IMPLANT SYSTEM**

[75] Inventor: **Leon Shaw**, Delray Beach, Fla.

[73] Assignee: **Minimrix Implant Technology**, Boca Raton, Fla.

[21] Appl. No.: **17,063**

[22] Filed: **Feb. 12, 1993**

[51] Int. Cl.[6] A61C 8/00; A61C 13/12; A61C 13/225

[52] U.S. Cl. 433/173; 433/172

[58] Field of Search 433/172, 173, 174, 175, 433/176

[56] **References Cited**

U.S. PATENT DOCUMENTS

4,531,915	7/1985	Tatum, Jr.	433/176 X
5,004,420	4/1991	Soderberg	433/172
5,092,771	3/1992	Tatum, III	433/173
5,122,059	6/1992	Durr et al.	433/173
5,174,755	12/1992	Fukuda	433/173

FOREIGN PATENT DOCUMENTS

3524556	1/1987	Germany	433/172

Primary Examiner—Gene Mancene
Assistant Examiner—Nicholas D. Lucchesi
Attorney, Agent, or Firm—M. K. Silverman

[57] **ABSTRACT**

A dental implant system includes an implant having its external geometry proportioned for securement within a human mandible. A junction between the implant and a complemental abutment of a dental prosthesis includes a journal that is defined by two bearing surfaces respectively preceding and following a threaded part of the junction. A longitudinal internal bore of the implant begins at a proximal open end of the implant and extends to a closed distal end, the bore includes the threaded part of the junction and is of substantially uniform diameter and pitch. A distal end of the bore defines one of the bearing surfaces and a proximal end of said bore defines the other bearing surface. The abutment of the dental prosthesis includes a male element which is complemental in all respects to the threaded portion of the bore and the bearing surfaces internal to the bore of the implant.

4 Claims, 3 Drawing Sheets

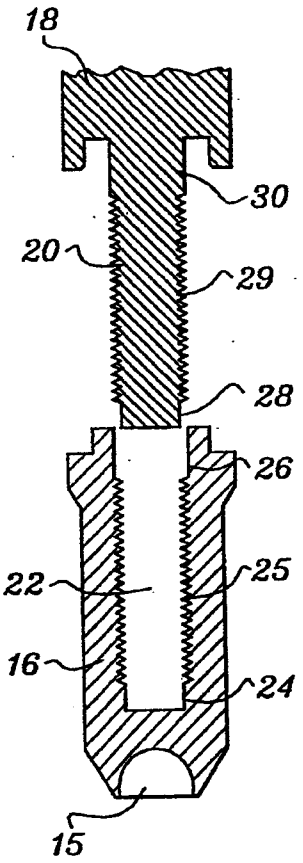

PRIOR ART

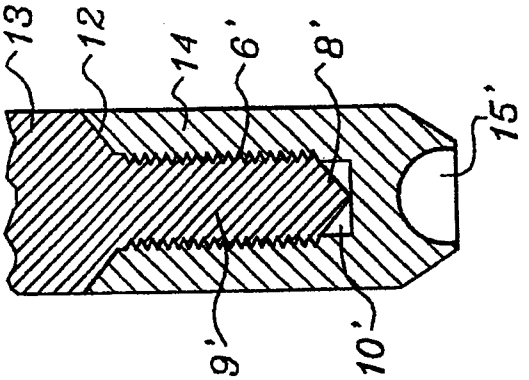

FIG. 2.

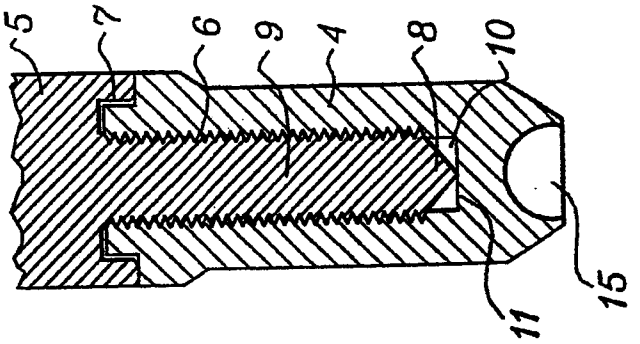

FIG. 1.

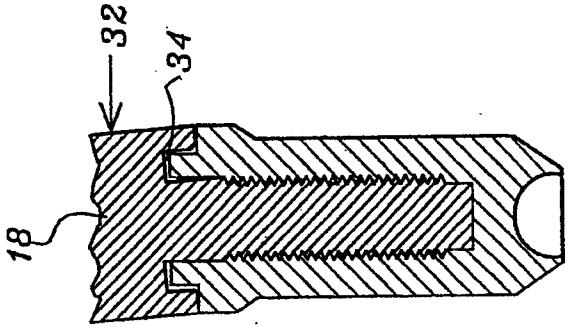

FIG. 5.

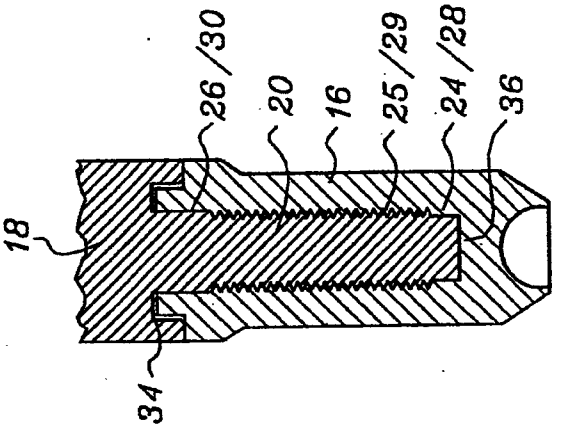

FIG. 4.

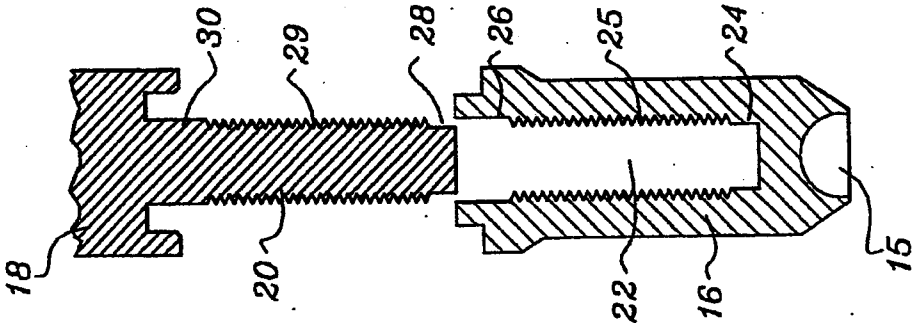

FIG. 3.

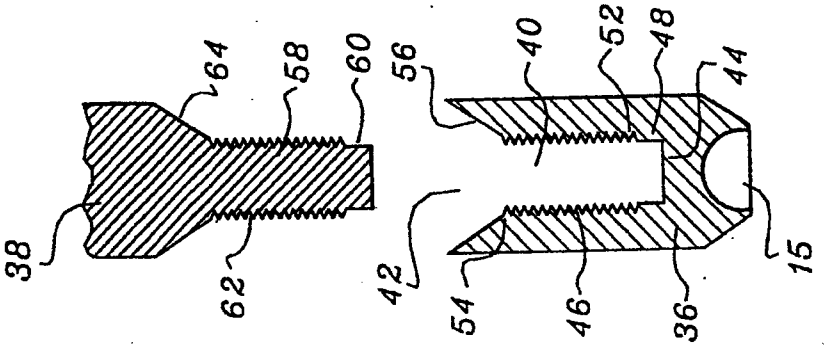

FIG. 9.

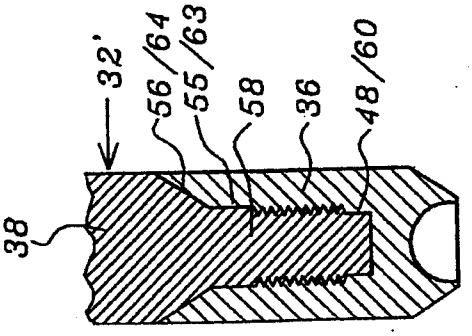

FIG. 8.

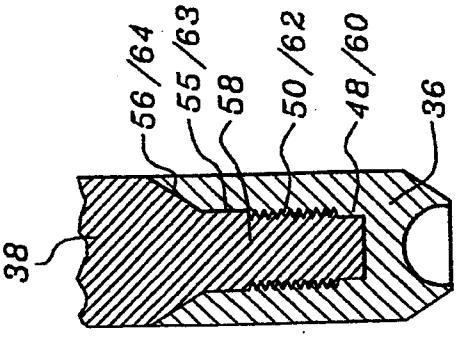

FIG. 7.

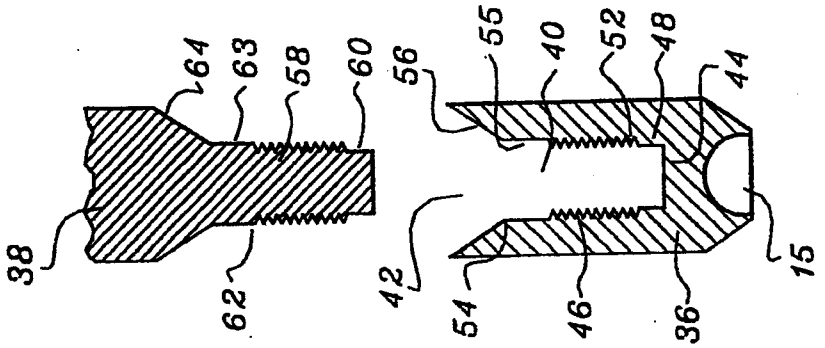

FIG. 6.

DENTAL IMPLANT SYSTEM

BACKGROUND OF THE INVENTION

The present invention relates to the subject of dental implants and, more particularly, a system for the securement of the prosthetic component of a dental system to a mandible implant.

In the prior art of dental implant technology, a long-standing problem has been that of assuring that the dental prosthesis, once secured to the implant, will not shift relative thereto. As is shown in the FIG. 1 view of the prior art, it has been well-known to employ what is termed a hex-type connection for purposes of securement of the abutment of a dental prosthesis to the implant body. This arrangement, as is more fully described in the Detailed Description of the Invention, employs a long threaded interface which after securement between the abutment and the implant, does not afford any means for the relief of pressures, stresses and forces upon the threaded interface between the abutment and the implant, It has, over the years during which dental implants have been used, been determined that the threads of such an implant system (which are typically formed of titanium) become exceedingly brittle such that, in the absence of a mechanism for the release or diffusion of stresses, strains and the like, chipping and abrading of the threaded junction will inevitably occur.

In addition to prior art systems of the type of FIG. 1, there has, further, been employed the so-called bevel junction which is shown in the view of FIG. 2, Although this geometry affords some advantages with respect to the uppermost aspects thereof, it does not address the basic problem of the implant-abutment junction, namely, that of the extended threaded interface which is vulnerable to chipping, abrasion, other forms of fracturing, metal transfer, and generalized material migration. These factors mean that such a junction cannot efficiently diffuse the prosthetic stresses between the abutment and the implant which are an aspect of normal use of any such system, This circumstance operates to increase the probability of external or internal failure of the entire prosthesis-implant system.

In addition, as can be well imagined, the abutment-/implant interface will, over the estimated ten-year life of a prosthesis-implant system, be subject to not only stresses, strains and impacts but, as well, to metabolically-generated organic molecules that are capable of entering and attacking the junction between the abutment and the implant at the line at which said junction, which is near to the mandible into which the implant, has been secured.

This invention has, accordingly, developed in response to the above stated problems of efficiency and durability of prior art prosthetic-implant systems.

SUMMARY OF THE INVENTION

The instant invention constitutes a dental implant system comprising an implant having its external geometry proportioned for securement within a human mandible. A junction between the implant and its complemental abutment of a dental prosthesis comprises journal means that are defined by proximal and distal bearing surfaces respectively preceding and following a threaded part of the junction. A longitudinal internal bore of the implant begins at a proximal open end of the implant and extends to a closed distal end thereof, said bore having said threaded part as an intermediate portion of substantially uniform diameter and pitch. A distal end of said bore defines said distal bearing surface and a proximal end of said bore defines said proximal bearing surface. The abutment of the dental prosthesis includes a male element which is complemental in all respects to said threaded portion and bearing surfaces of said longitudinal internal bore of said implant.

In addition, an upper, proximal-most portion of the implant and the abutment may take the form of either a so-called hex-head geometry or a bevel-head geometry which is in the nature of a conical section. By reason of the provision of said journal means, microscopic rotation and counter-rotation of the threaded portion of the implant-abutment interface may occur, thus providing a means for distribution of the prosthetic stresses and impacts to which the system will, in the course of normal use, become subject.

It is accordingly an object of the present invention to provide a dental implant system having a prosthesis abutment-implant body interface that will minimize the problems of fracturing, abrasion, material migration and metal transfer along the junction between said abutment and implant body.

It is another object of the invention to provide a dental implant system of the above type in which the possibility of harmful shifting of the abutment relative to the implant body is reduced.

It is a further object to provide a dental implant system in which the abutment-implant junction affords a more efficient distribution of prosthetic stress than exists in the prior art,

It is a yet further object of the invention to provide a dental implant system in which abutment-implant junction will provide a higher probability of long term success than is the case with prior art junctions or interfaces.

The above and yet other objects and advantages will become apparent from the hereinafter set forth Brief Description of the Drawings, Detailed Description of the Invention and Claims appended herewith.

BRIEF DESCRIPTION OF THE DRAWINGS

FIG. 1 is a longitudinal diametric cross-sectional view of a prior art implant-abutment junction employing a hex-head proximal portion,

FIG. 2 is a longitudinal diametric cross-sectional view of a prior art implant-abutment junction employing a bevel-head proximal portion,

FIG. 3 is an exploded view of a hex-head embodiment of the inventive system,

FIG. 4 is an assembly view of FIG. 3.

FIG. 5 is a view of FIG. 4 showing the effect of a rotational component of force thereon,

FIG. 6 is an exploded view showing a bevel-head junction embodiment of the inventive system.

FIG. 7 is an assembly view of FIG. 6.

FIG. 8 is a view of FIG. 6 showing the effect of a rotational component of force thereon.

FIG. 9 is an assembly view of another bevel-head junction embodiment of the invention.

DETAILED DESCRIPTION OF THE INVENTION

With reference to the views of FIGS. 1 and 2 there is shown two prior art dental implant systems employing respectively hex-head and bevel-head prosthesis-abutment junctions. With reference to FIG. 1 it may be seen

that the female geometry of implant 4 meets with the male geometry of abutment 5 to form a threaded longitudinal junction 6 which extends from proximal hex-head junction 7 to a tip 8 at the distal end of male element 9 of the abutment 5. Also shown is void 10 which exists about said tip 8 and above distal surface 11 of the longitudinal threaded bore within implant 4.

With reference to FIG. 2 there is shown another prior art junction known as a bevel-head connection. This differs from the above-described hex-head junction only in the bevel-shaped geometry of junction 12 between abutment 13 and implant 14. In other respects, the geometry of the embodiment of FIG. 2 is similar to that of FIG. 1, in that, particularly, the same long longitudinal threaded interface 6' is provided as is tip 8' of male element 9'. Accordingly, in the embodiment of the prior art of FIG. 2, as in the embodiment of the prior art of FIG. 1, there does not exist any means for relief of prosthetic stresses across the long threaded junction 6' between the implant 14 and the threaded male element 9' of abutment 13. That is, should this junction become subject to severe stress, strain, force or impact having a rotational component (which is the case with most such effects), the result will be a fracture, crack, abrasion or the like along either threaded junction 6 or 6' or an actual break of tip 8 or 8' with chipped material resultingly falling into void 10 or 10'.

It is noted that semicircles 15 and 15' at the bottom of FIGS. 1 and 2, are so-called blood collection areas which bear no relationship to the inventive aspects of the invention as described below.

With reference of the views of FIGS. 3 thru 5 there is shown a first embodiment of the instant invention in which there may, more particularly, be seen an implant 16 and prosthetic abutment 18 having, depending integrally therefrom, an elongated threaded male member 20 which is complemental in all respects to a longitudinal bore 22 of the implant 16. Said longitudinal bore 22 may be seen to, more particularly, include a distal bearing surface 24 which follows, and along substantially the entire length of said bore 22, threading 25 of the implant 16 and a proximal bearing surface 26 which precedes said threading 25 of bore 22.

Similarly, said male element 20 of the abutment 18 may be seen to include a distal bearing surface 28, a threaded surface 29, which extends substantially the length of said male element and, co-axial with said bearing surface 28, a proximal bearing surface 30 which depends integrally from the top portion of abutment 18.

With reference to FIG. 4, there is shown the assembled hex-head embodiment of the instant invention. Therefrom, it may be appreciated that distal bearing surfaces 24 and 28, on the one hand, and proximal bearing surfaces 26 and 30, on the other hand, operate to define a journal means by which rotational components of prosthetic stress, strain, impact, or forces, such as force 32 shown in FIG. 5, will have the effect of causing a microscopic rotation of abutment 18 relative to implant 16 about the axis of bore 22. It is to be appreciated that an upper junction 34 between abutment 18 and implant 16 also comprises a part of journal means. The resultant effect of such forces, when of a microscopic rotation occurs, is to cause a slight compression at distal interface 36 at the distal end of male element 20 and the distal end of longitudinal bore 22. Conversely, if the direction of the force 32 is counterclockwise, the effect will simply be that of creating a microscopic opening at distal interface 36. The result of these phenomena will be to allow for efficient distribution of prosthetic stress and the like and, thereby, to minimize the possibility of fracturing, abrasion, metal transfer or material migration across the threaded junction defined by said threaded surfaces 25 and 29,

With reference to the views of FIGS. 6 thru 8, there is shown an alternate embodiment of the instant invention known as a bevel-head connection between an implant 36 and a prosthetic junction 38. More particularly, there is in Figs, 6 thru 8 shown a second embodiment of the inventive dental implant system which includes said implant 36 which is externally proportioned for securement within the human mandible, Said implant 36 includes a longitudinal internal bore 40 which begins at a proximal open end 42 of the implant and extends to a closed distal end 44 thereof. Most of longitudinal bore 40 is defined by cylindrical circumferential threading 46. However, distally preceding threading 46 is, between distal end 44 of bore 40 and the distal-most beginning 52 of bore threading 46, a distal bearing surface 48 which is analogous in structure to said distal bearing surface 24 of implant 16 of the embodiment of FIGS. 3 thru 5,

Immediately above proximal-most end 54 threading 46 is a cylindrical female bearing surface 55 and a partial conical section female bearing surface 56. Accordingly, it may be seen that said proximal bearing surfaces 55 and 56 are an extension of the proximal open end 42 or the implant 36.

With reference to the abutment 38, shown in the exploded upper portion of FIG. 6, the external geometry of said abutment may be seen to be essentially complemental to that of the above-described implant 36 of the embodiment of FIGS. 6 thru 8. More particularly, said abutment includes a male element 58 having, at a distal end thereof, a distal bearing surface 60 followed by a threaded circumferential surface 62 conforming in pitch and diameter to said threaded surface 46 or to bore 40 of implant 36, and proximal bearing surfaces 63 and 64, taking the form of male cylindrical and partial conical sections which are complemental in all respects to said proximal bearing surfaces 55 and 56 of the implant 36,

With reference to the view of FIG. 7, the elements of the second embodiment are seen in assembled operational view, Therein, the embodiment of FIG. 6 thru 8 may be seen to differ from the embodiment of FIGS. 3 thru 5 in the geometry of the proximal bearing surfaces 56/64. In other words, in the embodiment of FIGS. 3 thru 5, both bearing surfaces are cylindrical and are mutually co-axial, in the embodiment of FIGS. 6 thru 8, the distal bearing surfaces 48/60 are cylindrical while the proximal bearing surfaces are partly conical. It has been found that the embodiment of FIGS. 6 thru 8 offers certain advantages over the embodiment of FIG. 3 thru 5 in that the proximal conical bearing surfaces 56/64, when impacted by an external rotational force component 32', more efficiently diffuse such prosthetic stress and, particularly, will do so with reduced metal transfer and material migration across the proximal interface of the system. In other words, it has been found that in the hex-head interface, described with respect to the embodiment of FIGS. 3 thru 5, an abrupt change in direction of the abutment-implant interface in area 34 (see FIGS. 4 and 5) increases the possibility of chipping and abrasion along such interface and, as well, increases the possibility of attack of such interface by

organic molecules to which the system is subject during use.

With further reference of the embodiment of FIGS. 6 thru 8, it is to be understood that the combination of distal bearing surfaces 48 and 60 on the one hand, and proximal bearing surfaces 55/63 and 56/64 on the other hand, operate to define a journal means which is otherwise analogous to the above described journal means with reference to the embodiment of FIGS. 3 thru 5.

With respect to the exploded view of FIG. 9 there is shown a further embodiment in which the proximal bearing surfaces of the system consist only of complemental female/male conical sections 56/64.

Accordingly, while there has been shown and described the preferred embodiment of the present invention, it is to be understood that the invention may be embodied otherwise than is herein specifically shown and described and that within said embodiments certain changes may be made in the form and arrangements of the parts without departing from the underlying ideas or principles of this invention as set forth in the claims appended herewith.

Having thus described my invention, what I claim as new, useful and non-obvious and, accordingly, secure by Letters Patent of the United States is:

1. A dental implant system, comprising:

(a) an implant externally proportioned for securement within a human mandible, said implant including a longitudinal internal bore beginning at a proximal open end of said implant and extending longitudinally to a closed distal end situated substantially at a distal end of said implant thereof, said bore having an unthreaded distal portion comprising a distal bearing surface and an unthreaded proximal bearing surface, comprising said open end thereof, said bore further having, between said distal and proximal bearing surfaces, a threaded portion of substantially uniform diameter and pitch; and

(b) an abutment of a dental prosthesis, the abutment having a male element, with an external surface thereof having a distal bearing surface unthreaded and fully complemental to said distal bearing surface of said implant,

a proximal bearing surface unthreaded and complemental to said proximal bearing surface of said implant, and a threaded portion of uniform diameter and pitch, extending substantially the length of said male element, complemental to said threaded portion of said bore of said implant,

whereby, upon complete threaded securement of said prosthesis abutment to said implant, said distal and proximal bearing surfaces will co-act to define journal means capable of diffusing prosthetic stresses to which the system will, in the course of normal use, become subject.

2. The system as recited in claim 1 in which said proximal and distal bearing surfaces both comprise complemental male and female cylindrical segments.

3. The system as recited in claim 2 in which said proximal bearing surfaces include complemental male and female conical sections.

4. The system as recited in claim 1 in which said proximal bearing surfaces comprise complemental male and female conical sections and said distal bearing surfaces comprise complemental male and female cylindrical segments.

* * * * *

US005964766A

United States Patent [19]

Shaw

[11] **Patent Number: 5,964,766**

[45] **Date of Patent: Oct. 12, 1999**

[54] **BUTTRESS THREAD IMPLANT**

[75] Inventor: **Leon Shaw**, Delray Beach, Fla.

[73] Assignee: **Biolok International, Inc.**, Deerfield Beach, Fla.

[21] Appl. No.: **08/172,702**

[22] Filed: **Dec. 27, 1993**

[51] **Int. Cl.**[6] **F16B 35/04**

[52] **U.S. Cl.** **606/73**; 411/411

[58] **Field of Search** 606/73; 411/411, 411/412, 414; 433/174

[56] **References Cited**

U.S. PATENT DOCUMENTS

4,468,200	8/1984	Münch	606/73
4,576,534	3/1986	Barth et al.	411/412
5,061,135	10/1991	Pritchard	411/411

FOREIGN PATENT DOCUMENTS

512307	8/1939	United Kingdom	411/411
85/04568	10/1985	WIPO	606/73

Primary Examiner—Michael Buiz
Assistant Examiner—Vy Quang Bui
Attorney, Agent, or Firm—M. K. Silverman

[57] **ABSTRACT**

A buttress-thread dental implant constitutes a rigid body including axially symmetric and radially uniform circumferential spiral pitch surfaces in the range or about 22 to about 28 of such pitch surfaces per axial inch. Above each pitch surface is a concave upper bevel surface which is longer than a lower bevel surface beneath each pitch surface. The intersection of each plane of each pitch surface with each plane of each lower bevel surface defines a total included bevel angle in the range of about 90 to about 1.30 degrees. The implant is also characterized by ratio of thread pitch to thread depth in the range of about 1.25:1 to about 1.40:1.

11 Claims, 1 Drawing Sheet

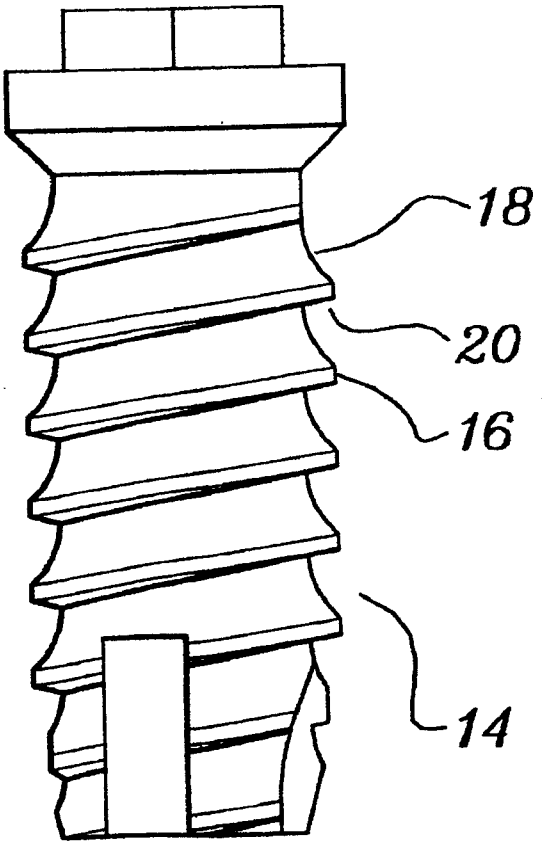

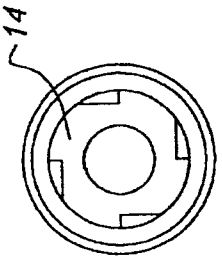

FIG. 4.

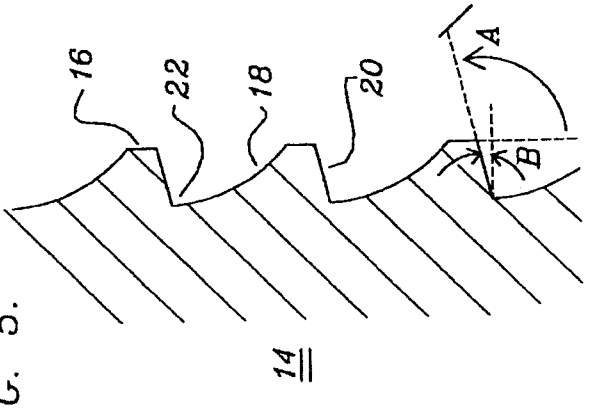

FIG. 5.

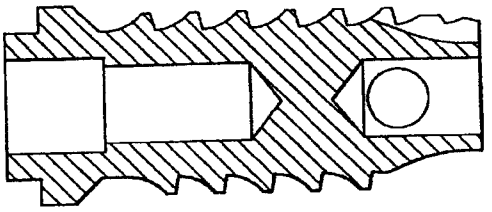

FIG. 3.

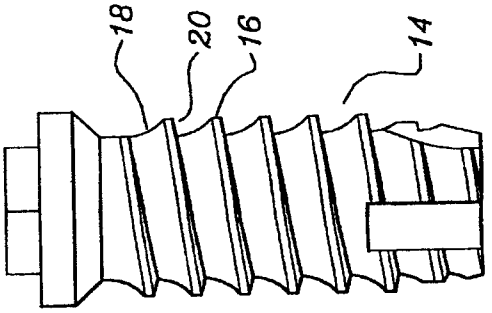

FIG. 2.

PRIOR ART

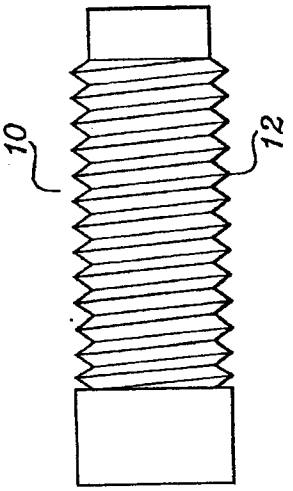

FIG. 1.

BUTTRESS THREAD IMPLANT

REFERENCE TO DISCLOSURE DOCUMENTS

The subject matter of the present application relates to Disclosure Document Number 274,554, recorded Feb. 20, 1991, and Disclosure Document Number 334,345, recorded Jul. 1, 1993.

BACKGROUND OF THE INVENTION

The present invention relates to the external configuration or a dental implant element and, more particularly, to a specific beneficial screw-like geometry for use with such an implant.

The prior art of dental implants has generally related to the use of forty pitch threading (0.025 inches between threads) having an essentially symmetric bevel as between the upper and lower faces on either side of the major thread diameters of the threading of such implant; elements. In such symmetry, the standard total included angle at the so-called bevel surface at the outer geometry of the major thread diameter has, historically, comprised an angle of about sixty degrees. Therein the distance between threads was generally equal to the thread depths. See FIG. 1.

The within inventor has discovered that a screw-like implant surface of the above type is not optimal from an anatomical perspective. More particularly, the inventor has, as a result of extended experimentation in the subject area, determined that the so-called spongy layer of bone, of which the upper and lower human mandible is formed, does not optimally engage threaded implant surfaces having a forty pitch and greater thread characteristic. The inventor has also discovered that the prior art symmetric bevel is not nearly as effective as would be an asymmetric upper-to-lower face configuration, as is more particularly set forth below.

As a consequence of the above limitations in the prior art, dental implants in the human mandible are prone to movement and loosening over time, particularly as the cumulative effect of the thousands of micro-forces, torques, stresses and strains at the bone implant interface occur. It is in response to these well known shortcomings in the prior art that the instant invention is directed.

SUMMARY OF THE INVENTION

The present inventive buttress-thread dental implant constitutes a rigid body including therein axially symmetric and radially uniform circumferential spiral pitch surfaces in the range of about 22 to about 28 or such pitch surfaces per axial inch. Above each pitch surface is a concave upper bevel surface which is longer than a lower bevel surface beneath each pitch surface. The intersection of each plane of each pitch surface with each plane of each lower bevel surface defines a total included bevel angle in the range of about 90 to about 130 degrees. The implant is also characterized by ratio of thread pitch to thread depth in the range of about 1.25:1 to about 1.40:1.

It is an object of the present invention to provide a buttress-thread dental implant having superior characteristics of gripping to the mandible bone interface and of resistance to micro-mechanical movements, stresses and the like.

It is another object to provide an improved dental implant having improved characteristics of axial and rotational stability relative to the anatomical bone interface.

It is a further object of the present invention to provide an improved dental implant surface having enhanced durability as compared to such prior art structures.

The above and other objects and advantages of the present invention will become apparent from the hereinafter set forth Brief Description of the Drawings, Detailed Description of the Invention and Claims appended herewith.

BRIEF DESCRIPTION OF THE DRAWINGS

FIG. **1** is a cross-sectional view of a prior art dental implant showing the threaded surface thereof.

FIG. **2** is an elevational view of the surface of a dental implant in accordance with the present invention.

FIG. **3** is an axial cross-sectional view of FIG. **2**.

FIG. **4** is a bottom plan view of the implant of FIG. **2**.

FIG. **5** is an enlarged fragmentary view of the bevel surface geometry of the invention.

DETAILED DESCRIPTION OF THE INVENTION

With reference to the view of FIG. **1** there is shown a typical prior art screw implant **10** having a plurality of radially symmetric upper and lower bevel surfaces **12**. As noted in the Background of the Invention above, such prior art implants will typically have forty pitches (threads) or more to an axial inch of screw length.

The present inventive dental implant **14** is shown in the elevational view of FIG. **2**, the cross sectional view of FIG. **3**, the bottom view of FIG. **4** and the enlarged bevel surface view of FIG. **5**.

The invention may, more particularly, be seen to comprise a so-called buttress-thread screw-like body having in the range of about twenty-two to about twenty-eight pitch surfaces **16** per inch. A preferred mode of the present invention has been determined to be about twenty-five pitches per axial inch, that is, 0.040 inches between threads.

The invention is further characterized by a particular relationship in geometry of upper bevel surface **18** to lower bevel surface **20**. See particularly FIG. **5**. Therein, as may be noted, the upper bevel surface is substantially longer (by a ratio of more than two to one) than lower bevel surface **20**. Also, said upper surface **18** is concavely curved at a radius of about 0.040 inches, while lower bevel surface **20** is substantially flat. It is noted that in a preferred embodiment the major thread diameter, which corresponds to the location of a pitch surface **16** in FIG. **5**, is 0.142 inches and the minor thread diameter **22** is about 0.112 inches. Accordingly, the difference between major and minor thread diameters, i.e., the thread depth is about 0.030 inches. Also the ratio of major-to-minor threads diameter is in the range of 1.2:1 to 1.3:1..

A further defining characteristic of the geometry of the instant dental implant is that of a first bevel angle A (see FIG. **5**) which is in the range of about 90 to about 130 degrees, with 110 degrees constituting the preferred embodiment thereof. Said first bevel angle A is defined by the intersections between each pitch surface **16** and each lower bevel surface **20**.

Another defining angulation of the invention is that of second bevel angle B which is the angle of lower bevel surface **20** relative to a transverse radial cross-section of the implant **14**. This angle is in the range of about 20 to about 30 degrees.

It is also noted that the ratio of major-to-minor thread pitch, that is, the distance between successive pitch surfaces **16** and thread depth (as defined by minor thread diameter **22**) is in the range of 1.25:1 to 1.40:1. This relationship differs

materially from prior art ratios (see FIG. 1) in which the ratio of thread pitch to thread depth is approximately 1 to 1.

It has been found that the above combination of pitches per axial length, ratio of lengths of upper-to-lower bevel surfaces, and said total included bevel angle A, produce a resultant dental implant having far superior anatomical compatibility and durability than prior art dental implants. There is, as such, obtained an implant having substantial resistance to micro-mechanical axial, rotational and other movements resultant from forces, stresses and strains which are typically encountered, over time, by the implant.

It is noted that the axial face of each bevel surface 16 (the major thread diameter) is in a preferred embodiment, flattened and will have a flat axial surface of about 0.001 inch.

It is also noted that a dental implant in accordance with the present invention may be provided with any type of head. Also, the implant may be self-tapping.

It is yet further noted that an implant of the instant type may be advantageously used as a bone screw in orthopedic applications.

While there has been shown and described the preferred embodiment of the instant invention it is to be appreciated that the invention may be embodied otherwise than is herein specifically shown and described and that, within said embodiment, certain changes may be made in the form and arrangement of the parts without departing from the underlying ideas or principles of this invention as set forth in the Claims appended herewith.

Having thus described my invention what I claim as new, useful and non-obvious and, accordingly, secure by Letters Patent of the United States is:

1. A bone implant, comprising:

a rigid body having therein axially symmetric and radially uniform circumferential spiral pitch surfaces, in the range of about 22 to about 28 of said pitch surfaces per axial inch, an upper concave bevel surface above each pitch surface which is longer than a lower bevel surface beneath each pitch surface, and each intersection of each plane of each pitch surface and each plane of each lower bevel surfaces defining a total included angle in the range of about 90 to about 130 degrees, said body having minor thread diameters at intersections of said upper and lower bevel surfaces, said spiral pitch surfaces and said minor thread diameters defining a ratio of thread pitch to thread depth in the range of about 1.25:1 to about 1.40:1.

2. The implant as recited in claim 1 in which each of said lower bevel surface defines a total included angle in the range of about 20 to about 30 degrees relative to a transverse radial cross-section of said implant at each minor thread diameter thereof.

3. The implant as recited in claim 2 in which said pitch surfaces comprises a ratio of a major thread diameter to said minor thread diameter in the range of about 1.2:1 to about 1.3:1.

4. The implant as recited in claim 3 in which a difference between major and minor thread diameters comprises about 0.030 inches.

5. The implant as recited in claim 2 in which said total included angle comprises about 110 degrees.

6. The implant as recited in claim 2 in which the length of said upper concave bevel surface is about twice the length of said lower bevel surface.

7. The implant as recited in claim 6 in which said upper bevel surface defines a radius of about 0.040 inches.

8. The implant as recited in claim 2, in which said lower bevel surface comprise substantially flat surfaces.

9. The implant as recited in claim 2, in which said concave upper bevel surfaces of said pitch surfaces each define a radium in a range of about 0.040 inches.

10. The implant as recited in claim 1 comprising a buttress-thread dental implant.

11. The implant as recited in claim 1 comprising an orthopedic screw.

* * * * *

US006149432A

United States Patent [19]

Shaw et al.

[11] Patent Number: 6,149,432

[45] Date of Patent: Nov. 21, 2000

[54] **BUTTRESS THREAD DENTAL IMPLANT**

[75] Inventors: **Leon Shaw**, Delray Beach; **Bruce Hollander**, Deerfield Beach, both of Fla.

[73] Assignee: **Biolok International, Inc.**, Deerfield Beach, Fla.

[21] Appl. No.: **09/312,114**

[22] Filed: **Jan. 4, 1999**

Related U.S. Application Data

[63] Continuation-in-part of application No. 08/172,702, Dec. 27, 1993, Pat. No. 5,964,766.

[51] **Int. Cl.**[7] **A61C 8/00**

[52] **U.S. Cl.** **433/174**

[58] **Field of Search** 433/173, 174, 433/201.1

[56] **References Cited**

U.S. PATENT DOCUMENTS

4,324,550	4/1982	Reuther et al.	433/174
4,468,200	8/1984	Munch	433/174
5,007,385	4/1991	Valen	433/174
5,199,873	4/1993	Schulte et al.	433/174
5,302,126	4/1994	Wimmer et al.	433/174
5,312,255	5/1994	Bauer	433/174
5,967,783	10/1999	Ura	433/174

Primary Examiner—Nicholas D. Lucchesi

Attorney, Agent, or Firm—M K Silverman

[57] **ABSTRACT**

A dental implant includes a rigid body having axially symmetric and radially circumferential spiral pitch surfaces, in a range of about 22 to about 28 pitch surfaces per axial inch, an upper concave bevel surface above each pitch surface, which is longer than a lower bevel surface beneath each pitch surface, and an intersection of each plane of each pitch surface, and each plane of each lower bevel surface defining a total included angle in a range of about 90 to about 130 degrees, the rigid body having minor thread diameters at intersections, between pitch surfaces, of the upper and lower bevel surfaces, the pitch surfaces and the minor thread diameters defining, at any axial radius of the rigid body, a ratio of thread pitch to thread depth in a range of about 1.25:1 to about 1.40:1. Each of the lower bevel surfaces define a total included angle in a range of about 20 to about 30 degrees relative to any given axial radius of the implant at a minor thread diameter.

16 Claims, 3 Drawing Sheets

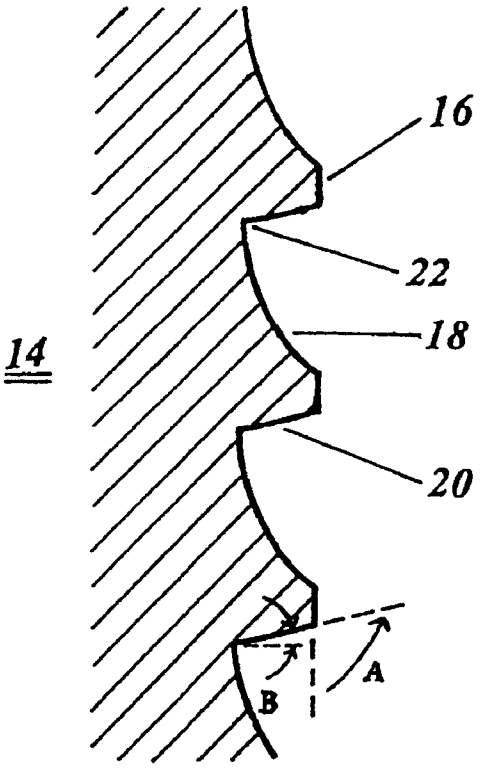

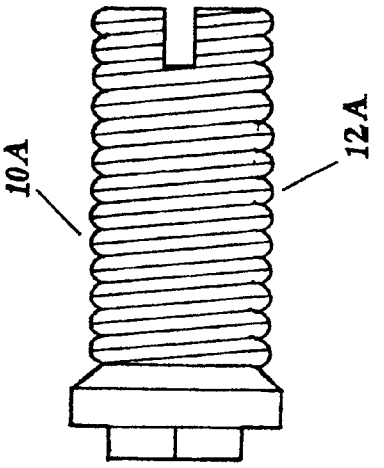

FIG. 1B

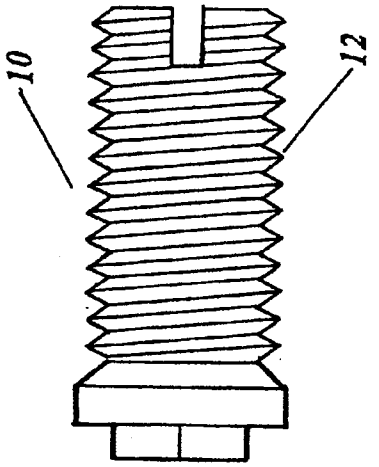

FIG. 1A

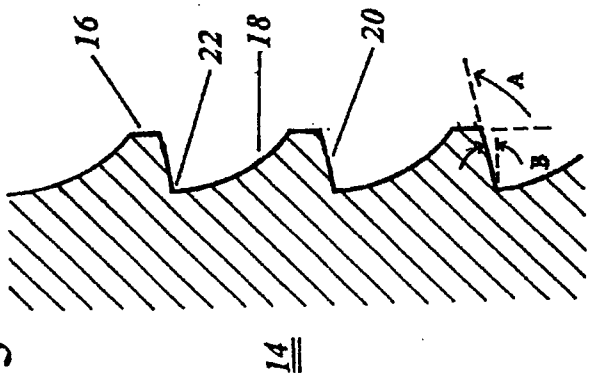

FIG. 5

FIG. 4

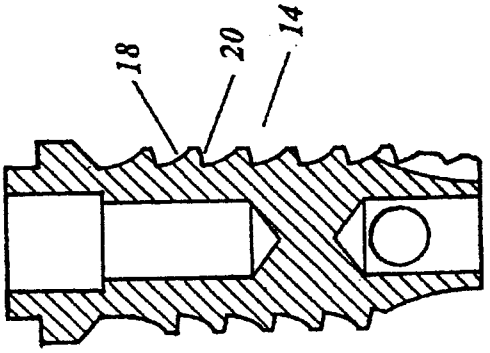

FIG. 3

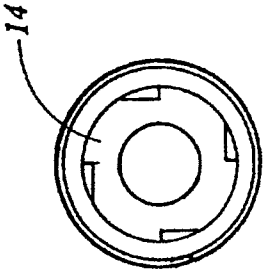

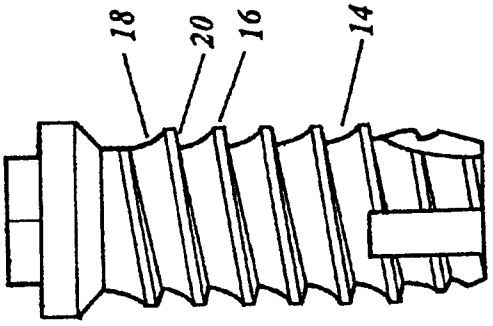

FIG. 2

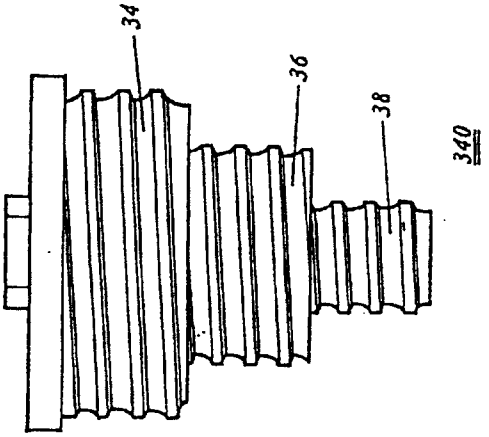

FIG. 8

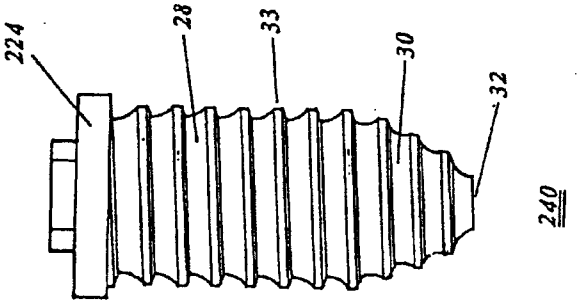

FIG. 7

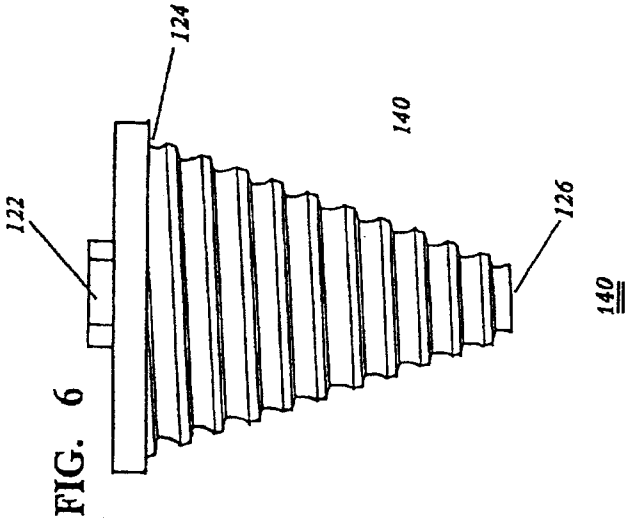

FIG. 6

BUTTRESS THREAD DENTAL IMPLANT

REFERENCE TO RELATED APPLICATION

This case is a continuation-in-part of application Ser. No. 08/172,702, filed Dec. 27, 1993, now U.S. Pat. No. 5,964,766, entitled Buttress Thread Dental Implant.

BACKGROUND OF THE INVENTION

The present invention relates to the external configuration of a dental implant element and, more particularly, to a specific beneficial screw-like geometry for use with such an implant.

The prior art of dental implants has generally related to the use of forty pitch threading (0.025 inches between threads) having an essentially symmetric bevel as between the upper and lower faces on either side of the major thread diameters of the threading of such implant elements. In such symmetry, the standard total included angle at the so-called bevel surface at the outer geometry of the major thread diameter has, historically, comprised an angle of about sixty degrees. Therein the distance between threads was generally equal to the thread depths. See FIGS. 1A and 1B.

The within inventor has discovered that a screw-like implant surface of the above type is not optimal from an anatomical perspective. More particularly, the inventor has, as a result of extended experimentation in the subject area, determined that the so-called spongy layer of bone, of which the upper and lower human mandible is formed, does not optimally engage threaded implant surfaces having a forty pitch and greater thread characteristic. The inventor has also discovered that the prior art symmetric bevel is not nearly as effective as would be an asymmetric upper-to-lower face configuration, as is more particularly set forth below.

As a consequence of the above limitations in the prior art, dental implants in the human mandible are prone to movement and loosening over time, particularly as the cumulative effect of the thousands of micro-forces, torques, stresses and strains at the bone implant interface occur. It is in response to these well known shortcomings in the prior art that the instant invention is directed.

SUMMARY OF THE INVENTION

A dental implant includes a rigid body having thereupon axially symmetric and radially circumferential spiral pitch surfaces, in a range of about 22 to about 28 pitch surfaces per axial inch, an upper concave bevel surface above each pitch surface, which is longer than a lower bevel surface beneath each pitch surface, and an intersection of each plane of each pitch surface, and each plane of each lower bevel surface defining a total included angle in a range of about 90 to about 130 degrees, said rigid body having minor thread diameters at intersections, between pitch surfaces, of said upper and lower bevel surfaces, said pitch surfaces and said minor thread diameters defining, at any axial radius of said rigid body, a ratio of thread pitch to thread depth in a range of about 1.25:1 to about 1.40:1. Each of said lower bevel surfaces define a total included angle in a range of about 20 to about 30 degrees relative to any given axial radius of said implant at a minor thread diameter thereof.

It is an object of the present invention to provide a buttress-thread dental implant having superior characteristics of gripping to the mandible bone interface and of resistance to micro-mechanical movements, stresses and the like.

It is another object to provide an improved dental implant having improved characteristics of axial and rotational stability relative to the anatomical bone interface and superior self-tapping ability over the prior art.

It is a further object of the present invention to provide an improved dental implant surface having enhanced durability as compared to such prior art structures.

The above and other objects and advantages of the present invention will become apparent from the hereinafter set forth Brief Description of the Drawings, Detailed Description of the Invention and Claims appended herewith.

BRIEF DESCRIPTION OF THE DRAWINGS

FIGS. 1A and 1B are a cross-sectional views of prior art dental implants showing the threaded surface thereof.

FIG. 2 is an elevational view of the surface of a dental implant in which the rigid body of thereof defines an envelope in the form of a conical section.

FIG. 3 is an axial cross-sectional view of FIG. 2.

FIG. 4 is a bottom plan view of the implant of FIG. 2.

FIG. 5 is an enlarged fragmentary view of the bevel surface geometry of the invention.

FIG. 6 is an elevational view of a variation of the first embodiment of the instant invention.

FIG. 7 is an elevational view of a second embodiment of the instant invention.

FIG. 8 is an elevational view of a third embodiment of the instant invention.

DETAILED DESCRIPTION OF THE INVENTION

FIGS. 1A and 1B show a typical prior art screw implants **10** and **10***a* having a plurality of radially symmetric upper and lower bevel surfaces **12** and **12***a*. As noted in the Background of the Invention above, such prior art implants will typically have forty pitches (threads) or more to an axial inch of screw length.

A first embodiment of a dental implant **14** is shown in the elevational view of FIG. **2**, the cross sectional view of FIG. **3**, the bottom view of FIG. **4** and the enlarged bevel surface view of FIG. **5**. As may be noted, the envelope of the implant defines a conical segment. The ratio of the major-to-minor bases **24** and **26** respectively may vary from about 1.5:1.0 as much as about 4.0:1.0 (see FIG. **6**). Therein, the invention may be seen to comprise a so-called buttress-thread screw-like body having in the range of about twenty-two to about twenty-eight pitch surfaces 16 per inch. A preferred mode of the present invention has been determined to be about twenty-five pitch surfaces per axial inch, that is, 0.040 inches between threads.

The invention is further characterized by a particular relationship in geometry of upper bevel surface **18** to lower bevel surface **20**. See particularly FIG. **5**. As may be noted, the upper bevel surface is substantially longer (by a ratio of more than two to one) than lower bevel surface **20**. Also, said upper surface **18** is concavely curved at a radius of about 0.040 inches, while lower bevel surface **20** is substantially flat. It is noted that in a preferred embodiment the major thread diameter, which corresponds to the location of pitch surface **16** in FIG. **5**, is 0.142 inches and the minor thread diameter **22** is about 0.112 inches. Accordingly, the difference between major and minor thread diameters, i.e., the thread depth is about 0.030 inches. Also the ratio of major-to-minor threads diameter is in the range of 1.2:1 to 1.3:1.

A further defining characteristic of the geometry of the instant dental implant is that of a first bevel angle A (see FIG.

5) which is in the range of about 90 to about 130 degrees, with 110 degrees constituting the preferred embodiment thereof. Another defining aspect of the invention is that of angle B which is a second bevel angle of lower bevel surface **20** relative to a transverse radial cross-section (axial radius) of the implant **14**. This angle is in a range of about 20 to about 30 degrees.

It is also noted that the ratio of thread pitch, that is, the distance between successive pitch surfaces **16** and thread depth (as defined by minor thread diameter **22**) is in the range of 1.25:1 to 1.40:1. This relationship differs materially from prior art ratios (see FIG. **1**) in which the ratio of thread pitch to thread depth is approximately 1 to 1.

It has been found that the above combination of pitches per axial length, ratio of lengths of upper-to-lower bevel surfaces, and said total included bevel angle A, produce a resultant dental implant having far superior anatomical compatibility and durability than prior art dental implants. There is, as such, obtained an implant having substantial resistance to micro-mechanical axial, rotational and other movements resultant from forces, stresses and strains which are typically encountered, over time, by the implant.

It is noted that the axial face of each bevel surface **16** (the major thread diameter) is in a preferred embodiment, flattened and will have a flat axial surface of about 0.001 inch.

In FIG. **6** is shown an embodiment of the invention including a rigid body **140** having a high aspect ratio, e.g., 4:1 of upper base **124** to lower base **126**, and having a recessed head **122**. As such, the upper base is much larger than the lower base.

In FIG. **7** is shown another embodiment in which a rigid body **240** includes a cylindrical upper portion **28** and a lower integral cylindrical section **30** having a taper of about nine degrees relative to cylindrical envelope **33** and a length of about 6 mm relative to a 12 mm length of the upper portion **28**.

In FIG. **8** is shown a further embodiment in which a rigid body **340** includes cylindrical sections **34**, **36** and **38** of successively smaller diameter. Such body **340** may have lengths of 8, 10 or 13 mm, and the sections thereof may have axial lengths of 2 to 5 mm.

It is also noted that a dental implant in accordance with the present invention may be provided with any type of head. Also, the implant may be self-tapping.

It is yet further noted that an implant of the instant type may be advantageously used as a bone screw in orthopedic applications.

While there has been shown and described the preferred embodiment of the instant invention it is to be appreciated that the invention may be embodied otherwise than is herein specifically shown and described and that, within said embodiment, certain changes may be made in the form and arrangement of the parts without departing from the underlying ideas or principles of this invention as set forth in the claims appended herewith.

What is claimed is:

1. A bone implant comprising:

a rigid body having thereupon axially symmetric and radially circumferential spiral pitch surfaces, in a range of about 22 to about 28 pitch surfaces per axial inch, an upper concave bevel surface above each pitch surface, which is longer than a lower bevel surface beneath each pitch surface, and an intersection of each plane of each pitch surface and each plane of each lower bevel surface defining a total included angle in a range of about 90 to about 130 degrees, said rigid body having minor thread diameters at intersections, between pitch surfaces, of said upper and lower bevel surfaces, said pitch surfaces and said minor thread diameters defining, at any axial radius of said rigid body, a ratio of thread pitch to thread depth in a range of about 1.25:1 to about 1.40:1.

2. The implant as recited in claim **1** in which each of said lower bevel surfaces define a total included angle in a range of about 20 to about 30 degrees relative to any given axial radius cross-section of said implant at a minor thread diameter thereof.

3. The implant as recited in claim **2**, in which said lower bevel surfaces comprise substantially flat surfaces.

4. The implant as recited in claim **2**, in which said concave upper bevel surfaces of said pitch surfaces each define a radius in a range of about 0.040 inches.

5. The implant as recited in claim **2**, in which said pitch surface comprise, at any axial radius, of said rigid body, a ratio of major thread diameter to said minor thread diameter in a range of about 1.2:1 to about 1.3:1.

6. The implant as recited in claim **5**, in which the difference between said major and minor thread diameters, at an given axial radius comprises about 0.030 inches.

7. The Implant as recited in claim **2**, in which a ratio of thread pitch to thread depth is, at any axial radius, in a range of about 1.25:1 to about 1.40:1.

8. The implant as recited in claim **2**, in which said total included angle comprises about 110 degrees.

9. The implant as recited in claim **2**, in which a length of said upper bevel surface comprises about twice the length of said lower bevel, at any axial radius of said rigid body.

10. The implant as recited in claim **2**, comprising a buttress-thread dental implant.

11. The implant as recited in claim **2**, comprising as orthopedic screw.

12. The implant as recited in claim **2**, in which said rigid body, thereof defines an envelope in the form of a conical section.

13. The implant as recited in claim **12**, in which a ratio of diameters of a major base to a lower base of said conical section is characterized by a ratio in a range of 1.5:1 to 4:1.

14. The implant as recited in claim **2**, in which said rigid body thereof defines an envelope having an upper portion substantially defining a cylinder and an integral lower portion substantially defining a conical section.

15. The implant as recited in claim **2**, in which an envelope defined by said rigid body substantially defines cylindrical sections of greater diameter at an upper region of said rigid body and of smaller diameter at lower regions of said body.

16. The implant as recited in claim **15**, in which said rigid body comprises three cylindrical regions each of successively lesser diameter from top to bottom thereof.

* * * * *

US006375464B1

(12) **United States Patent**
Hollander et al.

(10) **Patent No.: US 6,375,464 B1**
(45) **Date of Patent: Apr. 23, 2002**

(54) **MICROMECHANICAL SEAL FOR DENTAL IMPLANT SYSTEMS**

(75) Inventors: **Bruce Hollander**; **Ingo Kozak**, both of Boca Raton, FL (US)

(73) Assignee: **BioLok International, Inc.**, Deerfield Beach, FL (US)

(*) Notice: Subject to any disclaimer, the term of this patent is extended or adjusted under 35 U.S.C. 154(b) by 281 days.

(21) Appl. No.: **09/669,450**

(22) Filed: **Sep. 25, 2000**

(51) **Int. Cl.**[7] **A61C 8/00**
(52) **U.S. Cl.** **433/173**; 403/285; 411/924.1
(58) **Field of Search** 433/173, 174, 433/175, 176; 411/8, 333–335, 360, 924.1; 403/282, 285; 285/382.1, 382.2

(56) **References Cited**

U.S. PATENT DOCUMENTS

5,098,294 A * 3/1992 Lee et al. 433/173
5,328,371 A * 7/1994 Hund 433/173
5,447,434 A * 9/1995 Shaw 433/173

* cited by examiner

Primary Examiner—Nicholas D. Lucchesi
(74) *Attorney, Agent, or Firm*—M. K. Silverman

(57) **ABSTRACT**

A micromechanical seal between a first body and a second body is co-axially threadably securable about a portion of the first body. The seal is created by the combination of an annular planar radial surface within the first body; a surface of rotation of the first body disposed radially inwardly of the annular plane surface and defining, within a radial plane of the body, an obtuse angle, relative to the planar radial surface, in a range of about 90.5 to about 92 degrees; and an annular convex radial surface within the second body, such surface fully complemental in radial dimension to the planar radial surface of the first body, the annular convex surface defining a radius of curvature in a range of about 2 to about 8 ten thousandths of an inch, in which upon complete axial threadable securement of the second body into the first body, a region of compression of material forming the convex surface of the second body occurs at a tangent point of the first and second radial surfaces and in which polar alignment between the first and second bodies, during their threadable securement is facilitated by the above defined obtuse angle.

13 Claims, 6 Drawing Sheets

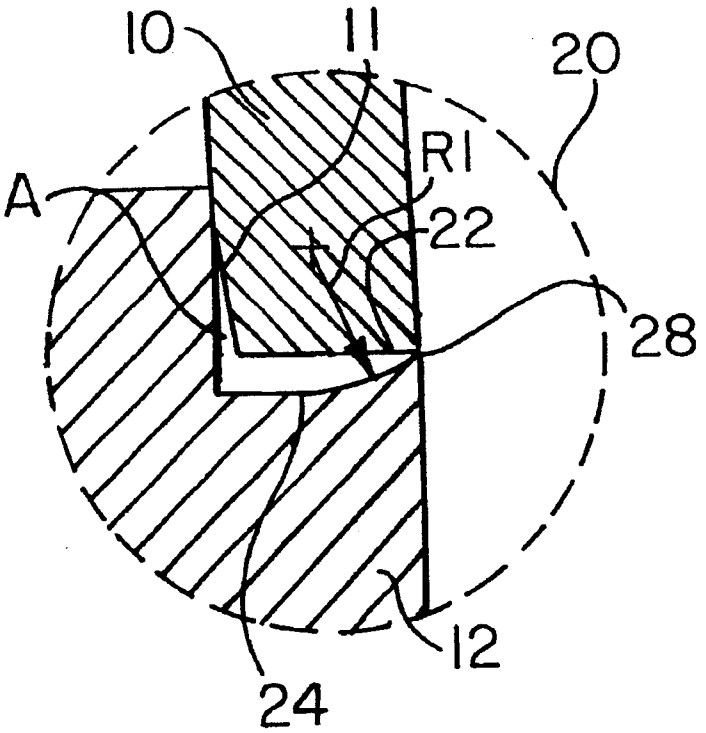

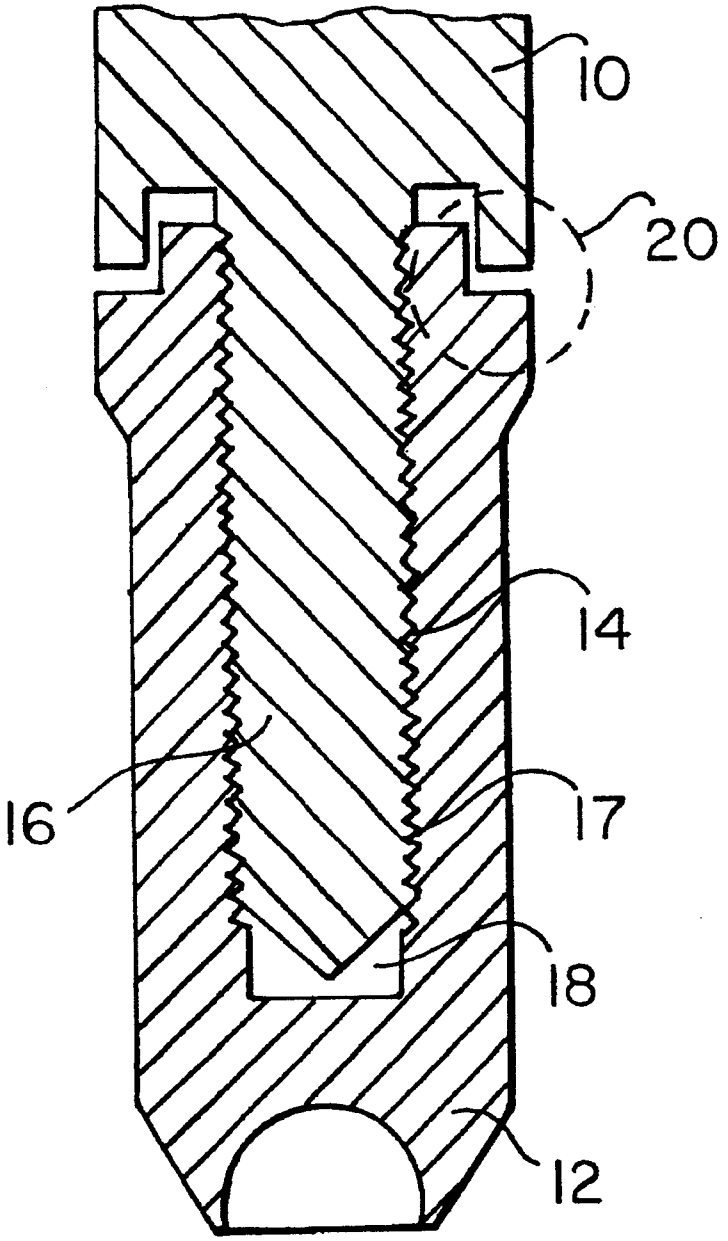

FIG. 1
PRIOR ART

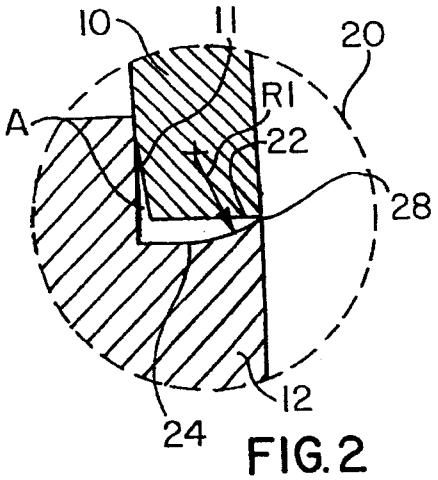

FIG. 2

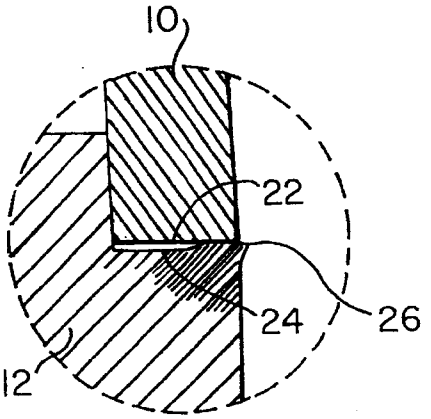

FIG. 3

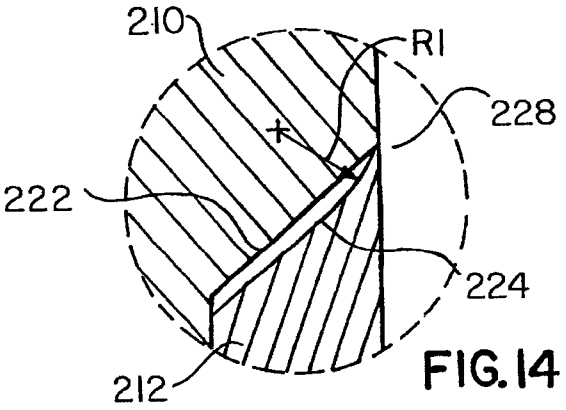

FIG. 14

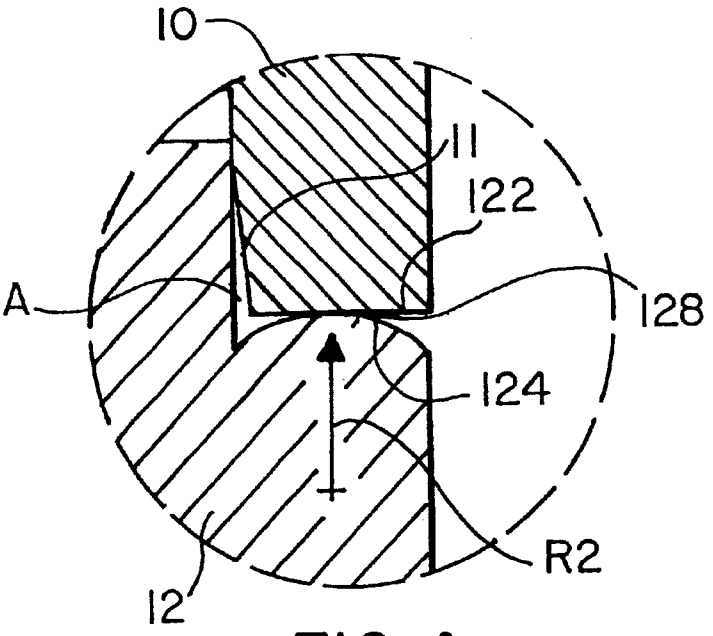

FIG. 4

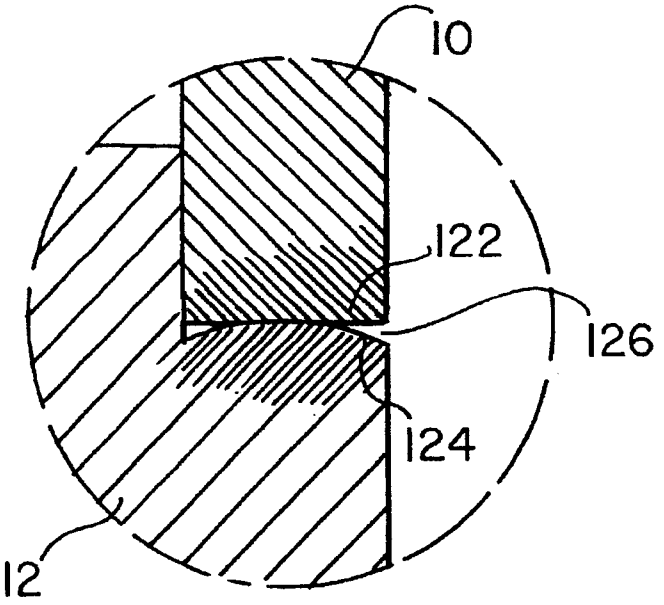

FIG. 5

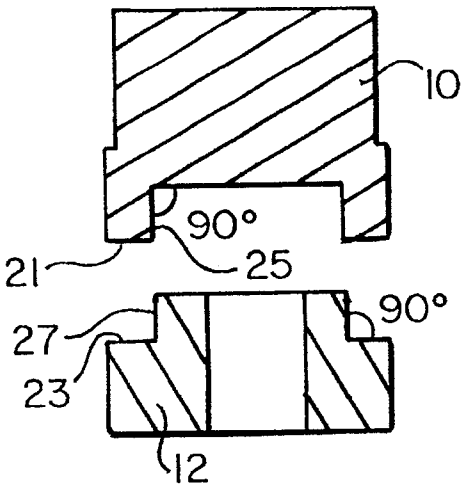

FIG.6
PRIOR ART

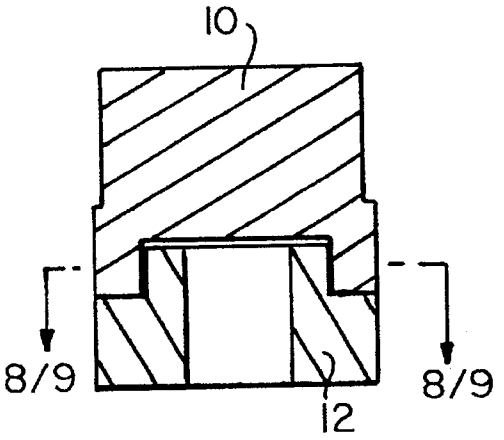

FIG.7
PRIOR ART

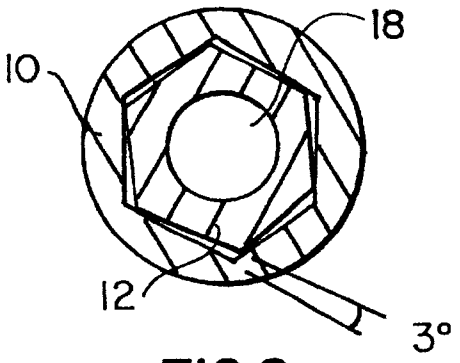

FIG.8
PRIOR ART

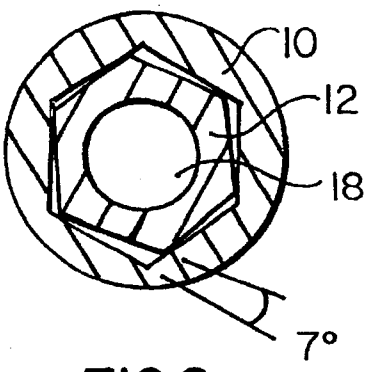

FIG.9
PRIOR ART

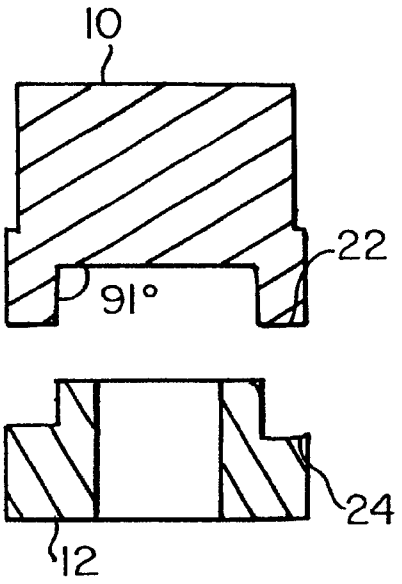

FIG. 10

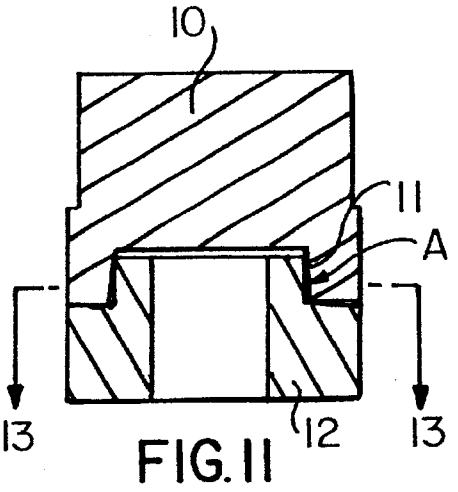

FIG. 11

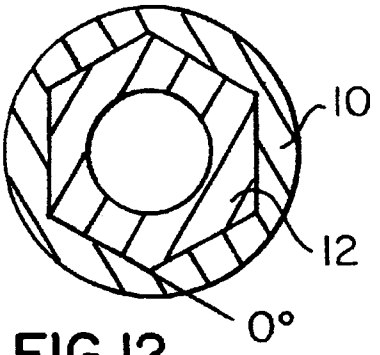

FIG. 12

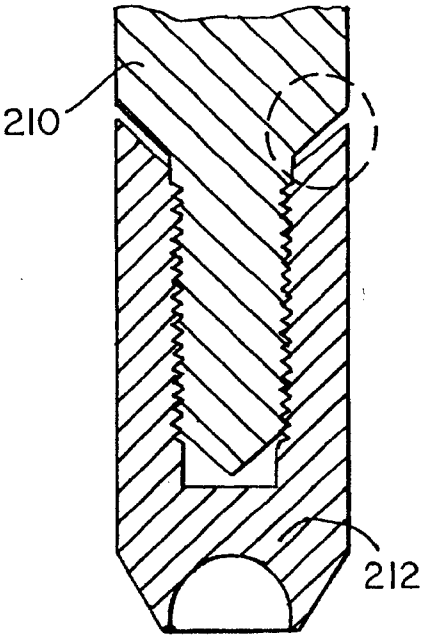

FIG.13
PRIOR ART

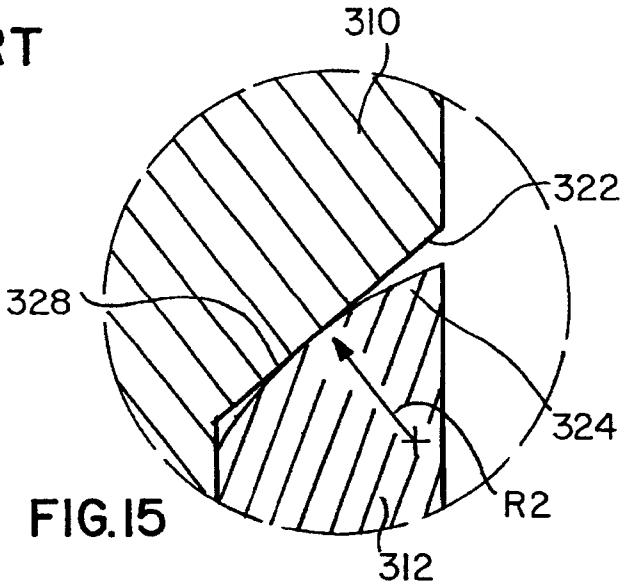

FIG.15

MICROMECHANICAL SEAL FOR DENTAL IMPLANT SYSTEMS

BACKGROUND OF THE INVENTION

The present invention relates to micromechanical seals and, more particularly, to seals of the type having particular utility in the area of dental implants where it is particularly important to effect a durable closure between the abutment and implant portions of a dental implant system. The importance of, and requirement for, such a seal at the interface between the abutment and implant portions arise because of the need to prevent penetration of such interface by bacteria and microscopic debris to which such dental structures are continually subject.

The instant invention is an improvement of the invention of U.S. Pat. No. 5,447,434 (1995) to Shaw. The invention thereby addresses the long felt need in art of dental implants to provide a micromechanical seal at the interface between the abutment and implant portions of a dental system without requirement for the use of chemical adhesives or washer equivalents for the accomplishment of such a seal.

SUMMARY OF THE INVENTION

The instant invention relates to a micromechanical seal between a first body and a second body which is co-axially threadably securable about a portion of said first body. Said seal is created by comprising (a) an annular planar radial surface within said first body; (b) a surface of rotation of said first body disposed radially inwardly of said annular plane surface and defining, within a radial plane of said body, an obtuse angle, relative to said planar radial surface, in a range of about 90.5 to about 92 degrees; and (c) an annular convex radial surface with said second body, said surface fully complemental in radial dimension to said planar radial surface of said first body, said annular convex surface defining a radius of curvature in a range of about 2 to about 8 ten thousandths of an inch, whereby upon complete axial threadable securement of said second body into said first body, a region of compression of material forming said convex surface of said second body will occur at a tangent point of said first and second radial surfaces and in which polar alignment between said first and second bodies, during said threadable securement thread is facilitated by said obtuse angle.

It is, accordingly, an object of the present invention to provide an improved micromechanical seal between bodies having threadably securable surfaces therebetween.

It is another object to provide an improved micromechanical seal between opposing surfaces of components of a dental implant system.

It is a further object to provide a seal of the above type having improved polar registration of the system components.

It is a yet further object to provide an improved means of sealing between abutment and implant portions of a dental system.

The above and yet other objects and advantages of the invention will become apparent from the hereinafter set forth Brief Description of the Drawings, Detailed Description of the Invention and Claims appended herewith.

BRIEF DESCRIPTION OF THE DRAWINGS

FIG. 1 is an axial cross-sectional view of a prior art dental abutment and implant.

FIG. 2 is an enlarged view of the region of an abutment-implant interface, also shown in dotted circle in FIG. 1 and also showing the improvements of the invention.

FIG. 3 is an assembly view of FIG. 2 showing in the compressed area of interface of the portions of the implant system.

FIG. 4 is a view, similar to the view of FIG. 2, however, showing a second embodiment of the instant invention.

FIG. 5 is an assembly view of FIG. 4 showing the area of compression thereof.

FIGS. 6 to 9 are axial and radial cross-sectional views of the prior art showing the use of vertical surfaces of rotation that are precisely normal to annular radial surfaces of opposing system elements.

FIGS. 10 to 12 are views, similar to those of FIGS. 7 to 9, however illustrating use of a surface of rotation that is not precisely normal to the radial surface thereof.

FIG. 13 is an axial cross-sectional view of a form of prior art dental abutment and implant, which employs conical interfaces.

FIG. 14 is an enlarged view of the area of the implant system of FIG. 13 to which the invention is applicable, said view corresponding to the embodiment of FIGS. 2 and 3.

FIG. 15 is an enlarged view of the embodiment of FIGS. 4 and 5 as applied to the implant system of the type of FIG. 13.

DETAILED DESCRIPTION OF THE INVENTION

With reference to the axial cross-sectional view of FIG. 1 there is shown a typical prior art dental implant system consisting of an abutment portion **10** and an implant portion **12**. Therein, as may be noted, there is provided a first threaded axial surface **14** upon elongate member **16** of abutment **10** and, conversely, a complemental axially threadable surface **17** upon bore **18** of said implant **12**. Thereby, in the manner shown in FIG. **1**, abutment portion **10** is axially threadably securable into bore **18** of implant **12** along said respectively complementally threadable surfaces **14** and **17**.

In the view of FIG. 1 the respective abutment and implant portions are shown in a partially axially secured condition so that an area of interface **20** between said abutment and implant portions may be viewed in greater detail, with reference to the inventive micromechanical seal in FIG. **2**. As may more particularly be noted therein, an annular planar radial surface **22** of abutment **10** is provided. Also shown in FIG. **2** is an axial surface of rotation **11** of abutment **10**, such that, in the radial cross-sectional view of FIG. **2**, an obtuse angle A is formed between surface **22** and surface **11**. This angle is preferable in a range of 90.5 to 92 degrees by preferably 91 degrees.

As may be noted in FIG. **2**, an opposing annular radial surface **24** of implant **12** is provided with a concave radius RI which is in a range of two (2) to eight (8) ten-thousandths of an inch. It is noted that the radial and geometries of surfaces **22** and **24** are fully complemental to each other. The result of fully advancing abutment **10** into implant **12**, when the surfaces **22** and **24** are contacted, is shown in the view of FIG. **3**. Therein, a micromechanical seal **26**, caused by material compression at point **28** of FIG. **2**, is created. Said seal **26** is characterized by an area of enhanced material density.

In the view of FIG. **4** is shown a further embodiment of the present invention in which a radius R2 is provided to radial implant surface **124** to create micromechanical seal **126** (see FIG. **5**) at point **128**, which is a tangent of said surfaces **122** and **124**. In this embodiment, the micromechanical seal **126** is formed slightly radially inwardly rela-

tive to said seal **26** in the embodiment of FIGS. **2** and **3**. The embodiment of FIGS. **4** and **5** also employs the obtuse angle A of the prior embodiment.

In FIGS. **6** to **12** is more fully shown the polar registration feature of the invention. FIGS. **6** and **7** are prior art exploded and assembly views respectively. FIGS. **8** and **9** are respective radial cross-sectional views taken along Line **8/9** of FIG. **7**, which show that the prior art abutment **10** will not accurately register with the implant **12** where radial shoulders **21** and **23** thereof are at exactly a ninety-degree angle (normal) to surfaces of rotation **25** and **27** of the abutment and implant respectively, and that such polar misalignment may be as great as **7** degrees. This effect is believed to be caused by a tendency of the implant dentist to overtorque the abutment. The within inventors have discovered that by providing a slight obtuse, i.e., said angle A (see FIG. **2**), such over-torquing can be compensated for to thereby obtain an improvement in polar registration of the components as is shown in FIGS. **10** to **12**.

With reference to FIG. **13** there is shown another type of prior art dental system which includes an abutment **210** and an implant **212**. Therein, opposing abutment and implant surfaces **222** and **224** (see FIG. **14**) are provided; however implant surface **224** is provided with said concave radius R1 discussed above. The principles of operation thereof follow that above-described with reference to the embodiments of FIGS. **2** and **3**. Accordingly, at point **228** of FIG. **14**, a micromechanical seal is formed after the abutment portion **210** is fully axially secured into implant portion **212**.

In the view of FIG. **15** is shown an embodiment with reference to the prior art structure of FIG. **13** which is similar to the above-described embodiment of FIGS. **4** and **5**. Therein opposing surfaces **322** and **324** form a micromechanical seal at point **328** after the portions **310** and **312** have been fully axially secured to each other. Therein, surface **324** is provided with the convex curve R2 of FIG. **4**.

While there has been shown and described the preferred embodiment of the instant invention it is to be appreciated that the invention may be embodied otherwise than is herein specifically shown and described and that, within said embodiment, certain changes may be made in the form and arrangement of the parts without departing from the underlying ideas or principles of this invention as set forth in the Claims appended herewith.

We claim:

1. A micromechanical seal between a first body and a second body which is co-axially threadably securable about a portion of said first body, said seal comprising:

(a) an annular planar radial surface within said first body;

(b) a surface of rotation of said first body disposed radially inwardly of said annular plane surface and defining, within a radial plane of said body, an obtuse angle, relative to said planar radial surface, in a range of about 90.5 to about 92 degrees; and

(c) an annular convex radial surface with said second body, said surface fully complemental in radial dimension to said planar radial surface of said first body, said annular convex surface defining a radius of curvature in a range of about 2 to about 8 ten thousandths of an inch,

whereby, upon complete axial threadable securement of said second body into said first body, a region of compression of material forming said convex surface of said second body will occur at a tangent point of said first and second radial surfaces and in which polar alignment between said first and second bodies, during said threadable securement thread is facilitated by said obtuse angle.

2. The micromechanical seal as recited in claim **1** in which said first body is a dental implant and said second body in a dental implant, each of a dental abutment system.

3. The micromechanical seal as recited in claim **2** in which said first and second annular radial surfaces comprise frustoconical segments of a virtual cone, thereby defining a virtual acute angle relative to a longitudinal axis of said dental implant system.

4. The seal as recited in claim **2** in which said first and second radial surfaces comprise respective male and female shoulders of said abutment and implant respectively of said dental implant system.

5. The seal as recited in claim **4** in which each of said bodies comprises medical grade titanium.

6. A micromechanical seal between a first body and a second body which is co-axially threadably securable about a portion of said first body, said seal comprising:

(a) an annular planar radial surface within said first body;

(b) a surface of rotation of said first body disposed radially inwardly of said annular plane surface and defining, within a radial plane of said body, an obtuse angle, relative to said planar radial surface, in a range of about 90.5 to about 92 degrees; and

(c) an annular concave radial surface with said second body, said surface fully complemental in radial dimension to said planar radial surface of said first body, said annular conave surface defining a radius of curvature in a range of about 2 to about 8 ten thousandths of an inch,

whereby, upon complete axial threadable securement of said second body into said first body, a region of compression of material forming said concave surface of said second body will occur at a tangent point of said first and second radial surfaces and in which polar alignment between said first and second bodies, during said threadable securement thread is facilitated by said obtuse angle.

7. The micromechanical seal as recited in claim **6** in which said first body is a dental implant and said second body in a dental abutment, each of a dental implant system.

8. The micromechanical seal as recited in claim **7** in which said first and second annular radial surfaces comprise frustoconical segments of a virtual cone thereby defining a virtual acute angle relative to a longitudinal axis of said dental implant system.

9. The seal as recited in claim **7** in which said first and second radial surfaces comprise respective male and female shoulders of said abutment and implant respectively of said dental implant system.

10. The seal as recited in claim **9** in which each of said bodies comprises medical grade titanium.

11. A micromechanical seal between a first body and a second body which is co-axially threadably securable about a portion of said first body, said seal comprising:

(a) an annular planar surface within said first body, said surface comprising a frustoconical segment of a virtual cone axially centered about an axis of a system defined by said first and second bodies.

(b) a curved annular surface with said second body, said surface fully complemental in radial dimension to said planar radial surface of said first body, said curved surface defining a radius of curvature in a range of about 2 to about 8 ten thousandths of an inch, said surface comprising a frustoconical segment of a virtual cone, complimental to said segment of said planar surface.

whereby, upon complete axial threadable securement of said second body into said first body, a region of compression of

material forming said curved surface of said second body will occur at a tangent point of said first and second radial surfaces and in which polar alignment between said first and second bodies, during said threadable securement thread is facilitated by said obtuse angle.

12. The seal as recited in claim 11 in which said curved annular surface is convex.

13. The seal as recited in claim 11 in which said curved annular surface is concave.

* * * * *

US006406296B1

(12) **United States Patent**
Hollander et al.

(10) **Patent No.: US 6,406,296 B1**
(45) **Date of Patent: Jun. 18, 2002**

(54) **IMPLANT WITH ENLARGED PROXIMAL SEGMENT**

(75) Inventors: **Bruce Hollander**; **Ingo Kozak**, both of Deerfield Beach, FL (US)

(73) Assignee: **Bio-Lok International, Inc.**, Deerfield Beach, FL (US)

(*) Notice: Subject to any disclaimer, the term of this patent is extended or adjusted under 35 U.S.C. 154(b) by 0 days.

(21) Appl. No.: **09/714,201**

(22) Filed: **Nov. 17, 2000**

Related U.S. Application Data

(63) Continuation-in-part of application No. 09/476,882, filed on Jan. 4, 2000, and a continuation-in-part of application No. 09/312,114, filed on Jan. 4, 1999, now Pat. No. 6,149,432, which is a continuation-in-part of application No. 08/172,702, filed on Dec. 27, 1993, now Pat. No. 5,964,766.

(51) **Int. Cl.**[7] **A61C 8/00**
(52) **U.S. Cl.** **433/174**
(58) **Field of Search** 433/173, 174

(56) **References Cited**

U.S. PATENT DOCUMENTS

4,406,623 A * 9/1983 Grafelmann et al. 433/174
5,259,398 A * 11/1993 Vrespa ..... 433/174 X
5,435,723 A * 7/1995 O'Brien 433/174
5,816,812 A * 10/1998 Kownacki et al. 433/174

* cited by examiner

Primary Examiner—Nicholas D. Lucchesi
(74) *Attorney, Agent, or Firm*—M. K. Silverman

(57) **ABSTRACT**

A dental implant for securement within a bore within a maxilla or mandible, inclusive of the cortical bone includes a threaded elongate anchor having a proximal upper portion having a larger outside diameter than that of an integral distal lower portion, the anchor defining, in axial cross-section, an envelope in which the upper portion substantially defines a cylinder and the lower portion substantially defines a conical section, and an engagable head integrally dependent from a proximal surface of the proximal portion of the anchor, the head having an outside diameter smaller than a greatest outside diameter of the proximal portion of the anchor, the outside diameter of the head also equal or less than a diameter of an entry region into the bore. A greatest axial length of the lower portion defines a length of about 6.0 mm.

19 Claims, 4 Drawing Sheets

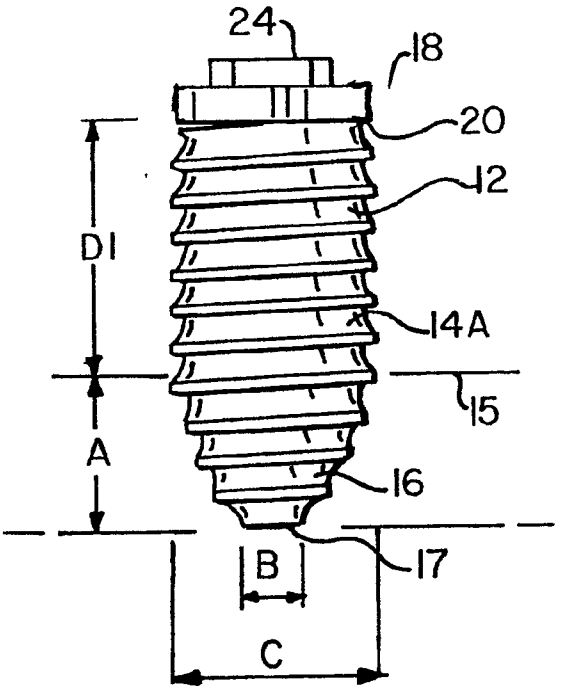

FIG. 2

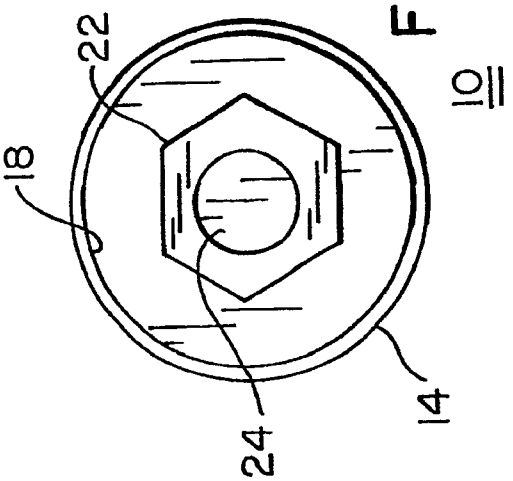

FIG. 1

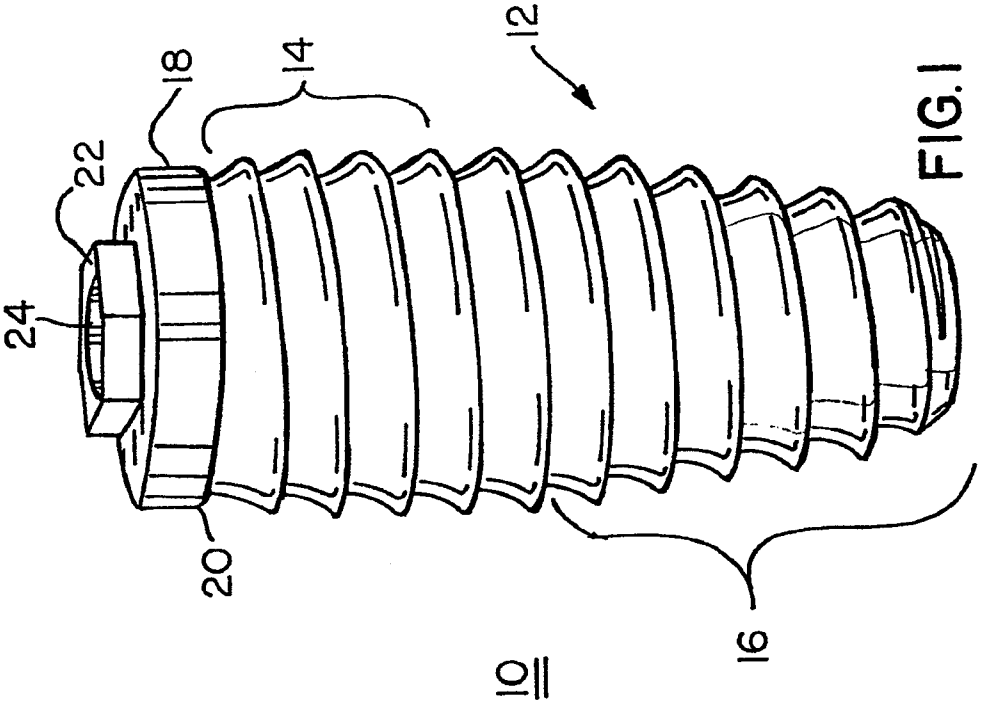

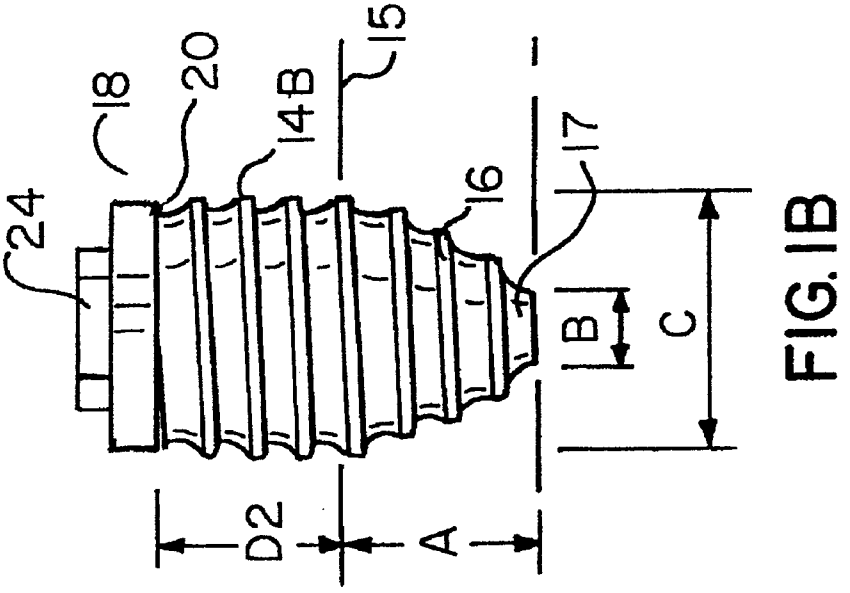

FIG. 1B

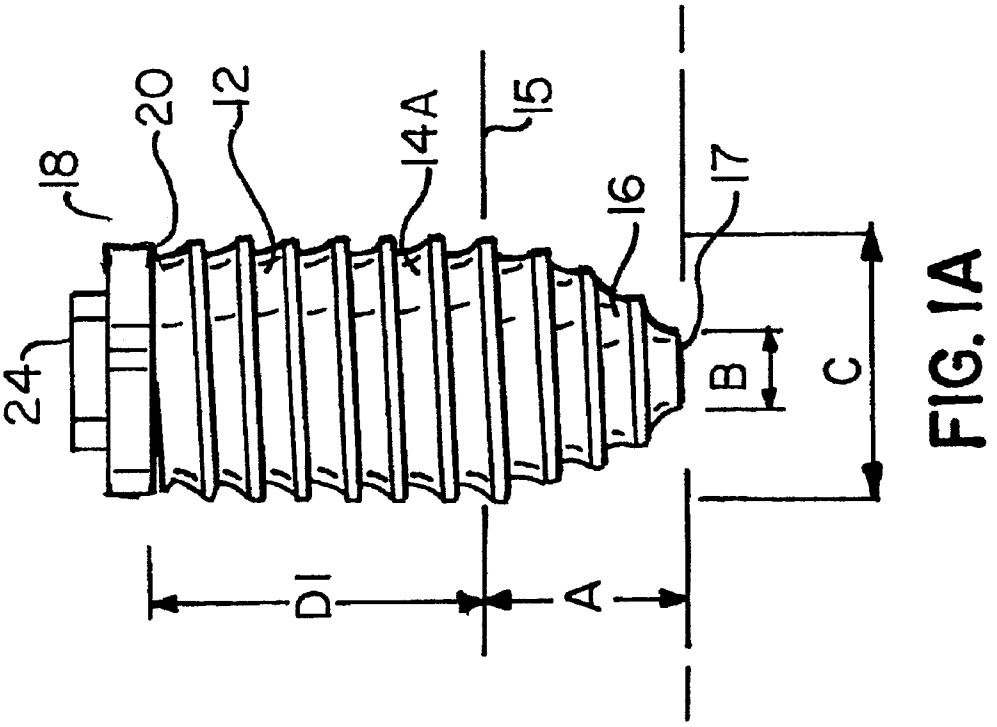

FIG. 1A

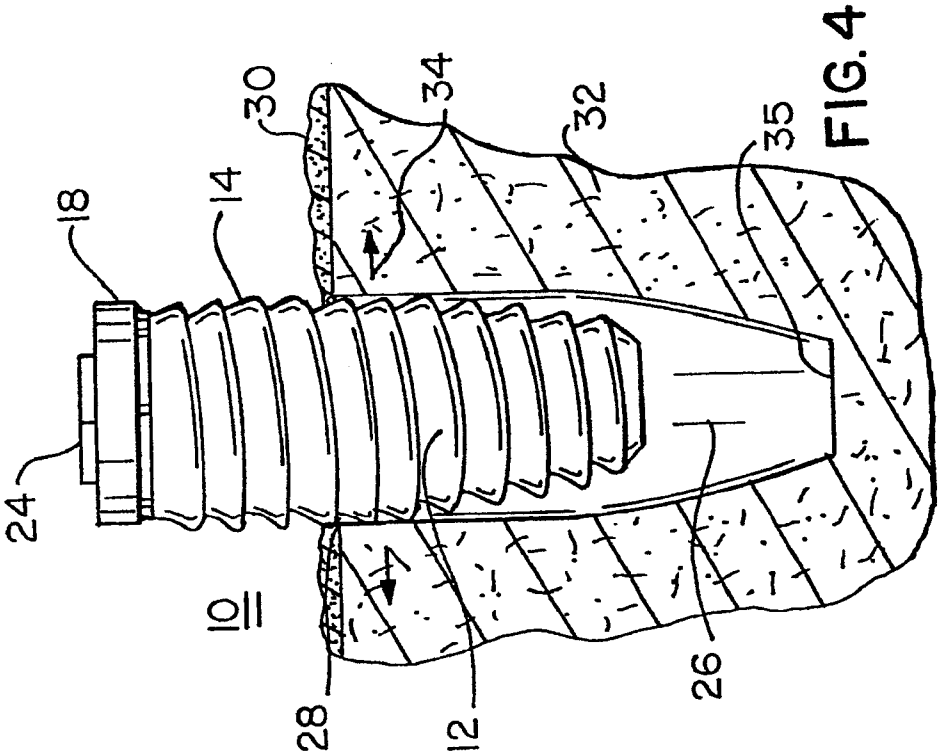

FIG. 4

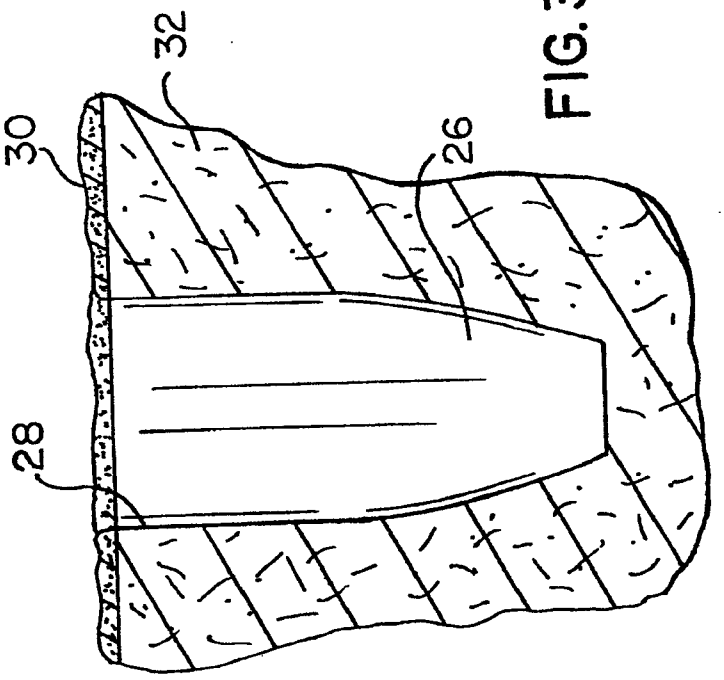

FIG. 3

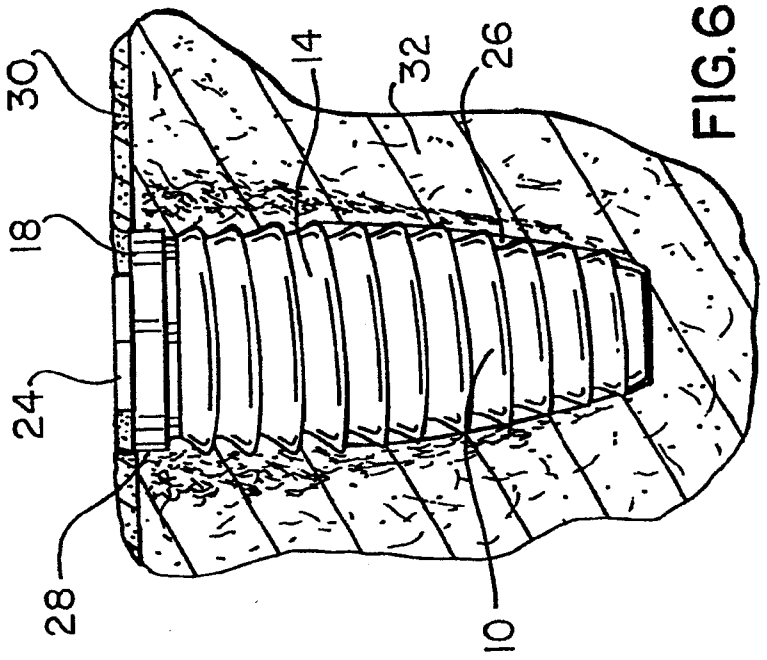

FIG.6

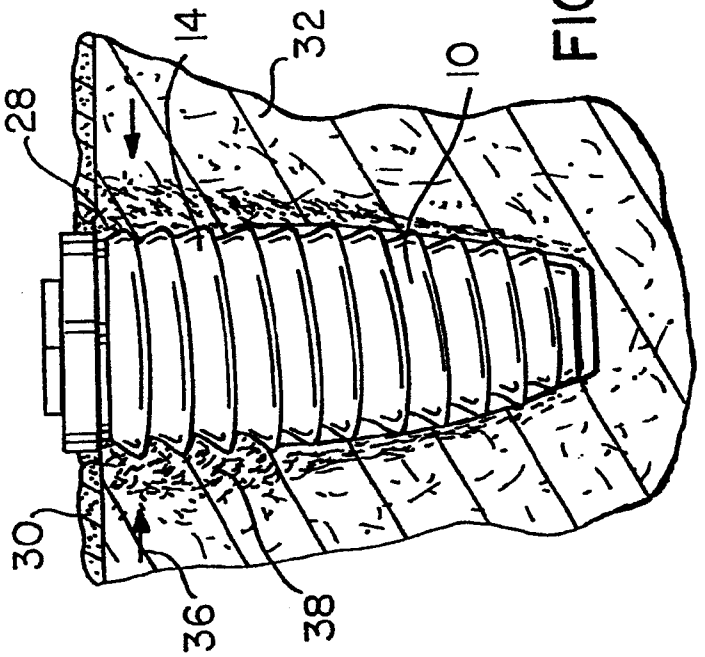

FIG.5

IMPLANT WITH ENLARGED PROXIMAL SEGMENT

REFERENCE TO RELATED APPLICATIONS

This case is a continuation-in-part of both application Ser. No. 09/312,114, filed Jan. 4, 1999, now U.S. Pat. No. 6,149,432 entitled Buttress Thread Dental Implant; and of application Ser. No. 09/476,882, filed Jan. 4, 2000, now abandoned, entitled Dental Implant with Enlarged Proximal Segment application Ser. No. 09/312,114 is a continuation-in-part of application Ser. No. 08/172,702, filed Dec. 27, 1993, now U.S. Pat. No. 5,964,766.

BACKGROUND OF THE INVENTION

The present invention relates to an improvement in dental implants including, without limitation, dental implants of the type taught in U.S. Pat. No. 5,964,766 (1999) entitled Buttress Thread Implant.

A historic concern in the technology of dental implantation has been that of maximizing securement, more technically known as bio-integration, of the dental implant within the cortical bone of the maxilla or mandible of the dental patient. Many structures and methods have been suggested to achieve this end, the same including, without limitation, buttress thread implants of the type referenced above.

The present invention therefore relates to a novel structure for a dental implant, the design for use with a specific method for the provision of enhanced bone-to-implant securement. As such, the instant invention responds to a long-felt in the art of implant dentistry.

SUMMARY OF THE INVENTION

A dental implant for securement within a bore within a maxilla or mandible, inclusive of the cortical bone thereof, includes a threaded elongate anchor having a proximal upper portion having a larger outside diameter than that of an integral distal lower portion thereof, said anchor defining, in axial cross-section, an envelope in which said upper portion substantially defines a cylinder and said lower portion substantially defines a conical section, and an engagable head integrally dependent from a proximal surface of said proximal portion of said anchor, said head having an outside diameter smaller than a greatest outside diameter of said proximal portion of said anchor, said outside diameter of said head also equal or less than a diameter of an entry region into said bore. A greatest axial length of said lower portion comprises a length of about 6.0 mm.

It is an object of the invention to provide a dental implant typically having a threaded lateral surface thereof, the implant having superior characteristics of gripping to the mandible or maxilla bone interface and of resistance to micro-mechanical movements such as stresses and the like.

It is another object to provide an improved dental implant, and method of use thereof, having improved characteristics of axial and rotational stability relative to the anatomical bone interface.

It is a further object of the invention to provide an improved dental implant which, in combination with a specially sized bone bore provides for enhanced stability and durability relative to prior art structures and methods.

The above and yet other objects and advantages of the present invention will become apparent from the hereinafter set forth Brief Description of the Drawings, Detailed Description of the Invention and Claims, appended herewith.

BRIEF DESCRIPTION OF THE DRAWINGS

FIG. **1** is an elevational view showing the surface of a dental implant in accordance with the present invention.

FIGS. **1A** and **1B** are views showing variations in the D1 and D2 dimension of the upper cylindrical portion of the anchor of the present implant.

FIG. **2** is a top plan view of the implant of FIG. **1**.

FIG. **3** is a vertical schematic view through the axis of rotation of a bone bore formed in accordance with the inventive method.

FIG. **4** is a schematic view, sequential to the view of FIG. **3**, showing initial insertion of the implant into the bone bore.

FIG. **5** is a schematic view, further sequential to the view of FIG. **4**, showing a substantially complete insertion of the implant into the bone bore.

FIG. **6** is a schematic view, sequential to the view of FIG. **5**, showing completion of the insertion of the implant into the bone bore.

DETAILED DESCRIPTION OF THE INVENTION

With reference to the elevational view of FIG. **1**, a dental implant **10** may be seen to include a rigid anchor **12** preferably including threading upon lateral surfaces thereof. Such threading may include, without limitation, buttress threading and machine screw threading.

Said anchor includes proximal and distal portions **14** and **16** respectively wherein the greatest outside diameter of the proximal segment is greater than the greatest outside diameter of the distal segment. In a preferred embodiment, thermal axial length of the proximal segment is about one-third of the total length of the implant. The dental implant further includes an engagable head **18** which is integrally dependent from a proximal surface **20** of said proximal portion **14** of the implant anchor **12**. It is noted that the outside diameter of said head **18** is smaller than the greatest outside diameter of said proximal portion **14** as, more particularly, may be noted with reference to the top axial plan view of FIG. **2**. Therein, it is noted that the outside diameter of said head **18** is between about 0.25 to 0.60 millimeters smaller than the greatest outside diameter of said proximal segment **14** of the anchor **12**.

It is further noted that head **18** includes an engagable grippable portion **22**, typically configured for engagement by a hex-head torque wrench.

As may be further noted in FIGS. **1** and **2**, the head and anchor include an axial longitudinal bore **24** within which an elongate element of an abutment, or a screw-anchoring abutment ultimately to be secured within implant **10**, is placed.

In the views of FIGS. **1A** and **1B**, it is shown that said cylindrical proximal portion **14** of the implant anchor **12** may be provided in a range of axial lengths as is indicated by the dimensions D1, corresponding to proximal portion **14***a*, in FIG. **1A**, and dimension D2 in FIG. **1B** corresponding to proximal portion **14***b* therein. The range of dimension D will typically fall between 2 and 9 millimeters, whereas the length A of distal conical segment **16** will always be that of approximately 6 millimeters, with a possible range of 4.8 to 7.2 millimeters. It has, more particularly, been determined that an axial length of about 6 millimeters of said conical distal portion **16** is most ergonomic and has been found, in combination with the particular shape of the conical distal portion **16** and geometry of bore **26** (which is complemental

to that of segment **16**) optimizes biointegration of anchor **12** within the osseotomy site. See FIGS. **3** and **6**. Other important dimensions of distal portion **16** are that of dimension C which is that of the diameter of the anchor at a transition plane **15** at which proximal portion **14** begins to taper into distal portion **16**. This dimension has been found to optimally fall within a range of 4 to 7 millimeters, while dimension A (as above noted) remains fixed at approximately 6 millimeters. Dimension B, that is, a flat planar distal-most surface of distal segment **16** will typically fall in a range of 1 to 3 millimeters.

With reference to the schematic view of FIG. **3**, there is shown a bore **26**, which has been drilled within a cortical bone **32** of a maxilla or mandible of a patient for placement of an implant. Above the cortical bone is shown soft tissue of gum **30**. Within bore **26** is an entry region **28** which may exhibit a diameter typically greater than a distal region of said bore, however, of a diameter generally equal to the outside diameter of said implant head **18**, as is more fully described below.

With reference to FIG. **4**, there is shown a rotational entry of the implant **10** into bone bore **26** at the area of transition between the distal portion **16** and proximal portion **14** of the implant anchor **12**. At this point, because of the enhanced diameter of a proximal segment relative to the diameter of entry region **28** of the bore **26**, bone **32** is compressed radially outwardly as is depicted by arrows **34** in FIG. **4**. Accordingly, during the insertion interval starting at the time of the view of FIG. **4** and continuing until the time just before the view of FIG. **5**, cortical bone **32** is forced radially outwardly to accommodate the greater outside diameter of proximal implant portion **14**. However, by the time that the point of the procedure which is shown in FIG. **5** is reached, bone **32** will compress about proximal portion **14** as in indicated by radially inwardly directed arrows **36** and the darkened region **38** in FIG. **5**. Also, proximal segment **14** will cut into bone **32** as the segment is advanced into bone **26**.

This bone-to-implant engagement process is further shown in FIG. **6** in which, as may be noted, head **18** of the implant **10** has been advanced within bore **26**, beneath the gum line **30** such that the head **18** is press-fittably engaged by the soft tissue of the gum. Accordingly, as is depicted, after completion of the method of the present invention, proximal segment **14** of the implant is compressible engaged by bone **32**, as is head **18** by soft tissue **30**. As such, an improved bone-to-implant securement, with improved osseointegration of the implant to the bone, is effected.

Where the anchor is provided with a buttress threading, such threading is axially symmetric and exhibits (1) radially circumferential spiral pitch surfaces, in a range of about 22 to about 28 pitch surfaces per axial inch, (2) an upper concave bevel surface above each pitch surface, which is longer than a lower bevel surface beneath each pitch surface, and (3) an intersection of each plane of each pitch surface with each plane of each lower bevel surface defining a total included angle in a range of about 90 to about 130 degrees, said anchor having minor thread diameters at intersections, between pitch surfaces, of said upper and lower bevel surfaces, said pitch surfaces and said minor thread diameters defining, at any axial radius of said rigid body, a ratio of thread pitch to thread depth in a range of about 1.25:1 to about 1.40:1. Each of said lower bevel surfaces define a total included angle in a range of about 20 to about 30 degrees relative to any given axial radius of said implant at a minor thread diameter thereof.

While there has been shown and described the preferred embodiment of the instant invention it is to be appreciated that the invention may be embodied otherwise than is herein specifically shown and described and that, within said embodiment, certain changes may be made in the form and arrangement of the parts without departing from the underlying ideas or principles of this invention as set forth in the Claims appended herewith.

Having thus described our invention, what we claim as new, useful and non-obvious and, accordingly, secured by Letters Patent of the United States is:

1. A dental implant for securement within an entry region of a bore, having a given diameter, within a maxilla or mandible, inclusive of the cortical bone thereof, said implant comprising:

(a) a constant-pitched threaded elongate bone-engaging anchor having a proximal upper portion having an outside diameter larger than that of an integral distal lower portion thereof, said larger diameter also larger than said given diameter of said entry region of said bore, said anchor defining, in axial cross-section, an envelope in which said upper portion substantially defines a cylinder and said lower portion substantially defines a conical section; and

(b) an engagable head integrally dependent from a proximal surface of said proximal portion of said anchor, said head having an outside diameter smaller than said outside diameter of said proximal portion of said anchor, said outside diameter of said head also substantially equal to said given diameter of said entry region of said bore.

2. The implant as recited in claim **1**, in which a greatest axial length of said lower portion comprises a length in a range of about 4.8 to about 7.2 mm.

3. The implant as recited in claim **2**, in which said greatest axial length comprises about 6.0 mm.

4. The implant as recited in claim **2**, in which an axial length of said upper portion comprises a dimension in a range of between about 2 mm to about 9 mm.

5. The implant as recited in claim **4**, in which a mean diameter of said anchor, at a plane of transition from said upper to lower portions thereof comprises a dimension in a range of about 4 mm to about 7 mm.

6. The implant as recited in claim **5**, in which a distal-most end of said lower portion defines a substantially flat radial surface having a diameter in a range of about 1 mm to about 3 mm.

7. The implant as recited in claim **1** in which said diameter of said head is between about 0.25 to about 0.6 mm smaller than a greatest diameter of said anchor.

8. The implant as recited in claim **2**, in which said threaded anchor comprises a buttress threading upon a lateral surface thereof.

9. The implant as recited in claim **8** in which said anchor comprises:

a rigid body having thereupon axially symmetric and radially circumferential spiral pitch surfaces, in a range of about 22 to about 28 pitch surfaces per axial inch, an upper concave bevel surface above each pitch surface, which is longer than a lower bevel surface beneath each pitch surface, and an intersection of each plane of each pitch surface and each plane of each lower bevel surface defining a total included angle in a range of about 90 to about 130 degrees, said rigid body having minor thread diameters at intersections, between pitch surfaces, of said upper and lower bevel surfaces, said pitch surfaces and said minor thread diameters defining, at any axial radius of said rigid body, a ratio of thread pitch to thread depth in a range of about 1.25:1 to about 1.40:1.

10. The implant as recited in claim **9** in which each of said lower bevel surfaces define a total included angle in a range of about 20 to about 30 degrees relative to any given axial radius cross-section of said implant at a minor thread diameter thereof.

11. The implant as recited in claim **10**, in which said lower bevel surfaces a comprise substantially flat surfaces.

12. The implant as recited in claim **10**, in which said concave upper bevel surfaces of said pitch surfaces each define a radius in a range of about 0.040 inches.

13. The implant as recited in claim **11**, in which said pitch surface comprise, at any axial radius, of said rigid body, a ratio of major thread diameter to said minor thread diameter in a range of about 1.2:1 to about 1.3:1.

14. The implant as recited in claim **13**, in which the difference between said major and minor thread diameters, at a given axial radius comprises about 0.030 inches.

15. The implant as recited in claim **10**, in which a ratio of thread pitch to thread depth is, at any axial radius, in a range of about 1.25:1 to about 1.40:1.

16. The implant as recited in claim **10**, in which said total included angle comprises about 110 degrees.

17. The implant as recited in claim **10**, in which a length of said upper bevel surface comprises about twice the length of said lower bevel, at any axial radius of said rigid body.

18. The implant as recited in claim **10**, in which a ratio of diameters of a major base to a lower base of said conical section is characterized by a ratio in a range of 1.5:1 to 4:1.

19. The implant as recited in claim **2**, in which said threaded anchor comprises machine screw threading upon a lateral surface thereof.

* * * * *

US006419491B1

(12) **United States Patent**
Ricci et al.

(10) **Patent No.: US 6,419,491 B1**
(45) **Date of Patent: Jul. 16, 2002**

(54) **DENTAL IMPLANT SYSTEM WITH REPEATING MICROGEOMETRIC SURFACE PATTERNS**

(75) Inventors: **John Ricci**, Middleton; **Harold Alexander**, Short Hills, both of NJ (US); **Charles Naiman, deceased**, late of Brookline, MA (US), by Harriet Naiman, executrix; **Bruce L. Hollander**, Boca Raton; **Ingo K. Kozak**, Atlantis, both of FL (US)

(73) Assignee: **Bio-Lok International, Inc.**, Deerfield Beach, FL (US)

(*) Notice: Subject to any disclaimer, the term of this patent is extended or adjusted under 35 U.S.C. 154(b) by 0 days.

(21) Appl. No.: **09/500,038**

(22) Filed: **Feb. 8, 2000**

Related U.S. Application Data

(63) Continuation-in-part of application No. 08/996,244, filed on Dec. 22, 1997, now abandoned, which is a continuation-in-part of application No. 08/639,712, filed on Apr. 29, 1996, now abandoned, which is a continuation of application No. 08/390,805, filed on Feb. 15, 1995, now abandoned, which is a continuation of application No. 08/146,790, filed on Nov. 2, 1993, now abandoned.

(51) **Int. Cl.**[7] **A61C 8/00**
(52) **U.S. Cl.** **433/173**
(58) **Field of Search** 433/173, 174, 433/175, 201.1; 623/17.17, 17.18, 23.5, 23.76

(56) **References Cited**

U.S. PATENT DOCUMENTS

4,553,272	A		11/1985	Mears
4,826,434	A	*	5/1989	Krueger
5,202,227	A		4/1993	Matsuda
5,588,838	A	*	12/1996	Hansson et al. 433/173
5,607,607	A		3/1997	Naiman
5,716,412	A	*	2/1998	DeCarlo, Jr. et al. 623/23.5
5,833,641	A		11/1998	Curtis
5,976,826	A		11/1999	Singhvi
5,989,027	A	*	11/1999	Wagner et al. 433/173
6,174,167	B1	*	1/2001	Wohrle 433/173

FOREIGN PATENT DOCUMENTS

WO	WO 95/12369	5/1995

OTHER PUBLICATIONS

Clark et al Development 108, 635–644 1990. Topographical Control of Cell Behavior: II multiple grooved substrate.
Chehroudi et al, *J. Biomedical Materials Research*, vol. 24, 1203–1219 (1990). Titanium-coated micromachined grooves of different dimensions affect epithelial cells differently in vivo.
Ricci et al, Mat. Res. Soc. Symp. Proc., vol. 252 (1992) The Influence of Surface Microgeometry on Fibroblast Colonization of Synthetic Surfaces.
Ricci et al, Meeting of Society of Biomaterials 1991, Tendon and Bone Cell Colony Formation on striated Surfaces.

* cited by examiner

Primary Examiner—Cary E. O'Connor
(74) *Attorney, Agent, or Firm*—M. K. Silverman

(57) **ABSTRACT**

A dental implant system includes an implant element for surgical insertion into a maxillofacial bone or tissue of a patient, the implant element having a collar section and a distal, anchor-like section, the collar section having an ordered microgeometric repetitive surface pattern in the form of alternating ridges and grooves, each having a fixed or established width in a range of about 2.0 to about 25 microns (micrometers) and a fixed or established depth in a range of about 2 to about 25 microns, in which the microgemoetric repetitive patterns define a guide for preferential promotion of the rate, orientation and direction of growth colonies of cells of the maxillofacial bone or tissue which are in contact with the surface pattern.

23 Claims, 10 Drawing Sheets

