US00RE37545E

(19) **United States**

(12) **Reissued Patent**
Chao

(10) **Patent Number: US RE37,545 E**

(45) **Date of Reissued Patent: Feb. 12, 2002**

(54) **AUXILIARY LENSES FOR EYEGLASSES**

(75) Inventor: **Richard Chao**, Chia Yi Hsien (TW)

(73) Assignees: **Contour Optik, Inc.**, Chiayi (TW); **Asahi Optical Co., Ltd.**

(21) Appl. No.: **09/182,862**

(22) Filed: **Oct. 21, 1998**

Related U.S. Patent Documents

Reissue of:

(64) Patent No.: **5,568,207**
Issued: **Oct. 22, 1996**
Appl. No.: **08/554,854**
Filed: **Nov. 7, 1995**

(51) **Int. Cl.**[7] **G02C 7/08**; G02C 9/00

(52) **U.S. Cl.** **351/57**; 351/47

(58) **Field of Search** 351/47, 57, 41, 351/44; 2/441, 443

(56) **References Cited**

U.S. PATENT DOCUMENTS

1,679,233	A	7/1928	Strauss	351/47
2,737,847	A	3/1956	Tesauro	351/41
2,770,168	A	11/1956	Tesauro	351/41
3,498,701	A	3/1970	Miller	351/57
3,531,188	A	9/1970	LeBlanc et al.	351/48
3,531,190	A	9/1970	LeBlanc	351/113
3,536,385	A	10/1970	Johnston	351/47
3,565,517	A	2/1971	Gitlin et al.	351/106
3,582,192	A	6/1971	Gitlin et al.	351/52
3,838,914	A	10/1974	Fernandez	351/106
4,070,103	A	1/1978	Meeker	351/52
4,070,105	A	1/1978	Marzouk	351/159
4,196,981	A	4/1980	Waldrop	351/59
4,217,037	A	8/1980	Lemelson	351/47
4,547,909	A	10/1985	Bell	2/431
4,988,181	A	1/1991	Riach	351/52

(List continued on next page.)

FOREIGN PATENT DOCUMENTS

CH	572222	1/1976
CN	76209045	9/1976
CN	107096	4/1985
CN	1117593	2/1996
DE	1797366	1/1971
DE	G 85 07 761.5	6/1985
DE	G 88 06 898.6	10/1988
DE	3905041	8/1990
DE	3919489	12/1990
DE	3920879	1/1991
DE	3921987	1/1991
DE	39333310	1/1991
DE	9216919	2/1993
DE	43 16 698	11/1994
EP	0469699	2/1992

(List continued on next page.)

OTHER PUBLICATIONS

English language abstract of Japanese Publication No. 55–50217.

English language abstract of Japanese Publication No. 54–111842.

English language abstract of Japanese Publication No. 54–111841.

English language abstract of Japanese Publication No. 1–136114.

(List continued on next page.)

Primary Examiner—Huy Mai

(74) *Attorney, Agent, or Firm*—Morgan & Finnegan, L.L.P.

(57) **ABSTRACT**

An eyeglass device includes a primary and an auxiliary spectacle frames for supporting lenses. The primary spectacle frame includes two legs pivotally coupled to two side extensions and includes two magnetic members secured in the rear and side portions. The auxiliary spectacle frame includes two legs engaged on the primary spectacle frame and each having a magnetic member for engaging with the magnetic members of the primary spectacle frame so as to secure the spectacle frames together and so as to prevent the auxiliary spectacle frame from moving downward relative to the primary spectacle frame.

34 Claims, 2 Drawing Sheets

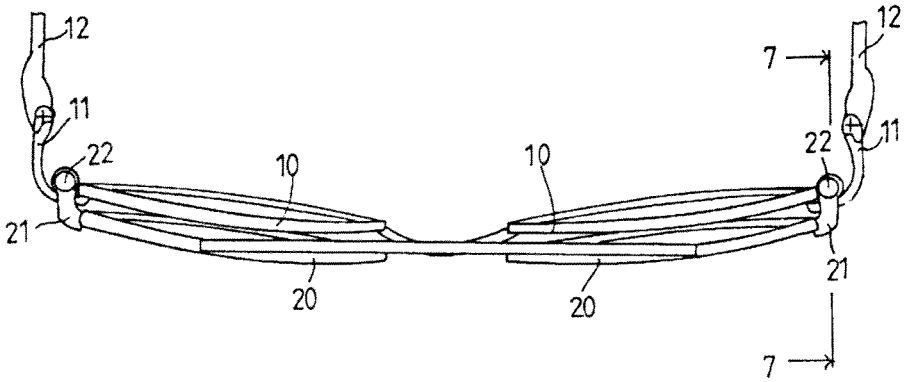

U.S. PATENT DOCUMENTS

5,181,051	A		1/1993	Townsend et al.	351/52
5,243,366	A		9/1993	Blevins	351/57
5,321,442	A		6/1994	Albanese	351/44
5,389,981	A		2/1995	Riach	351/158
5,410,763	A		5/1995	Bolle	2/436
5,416,537	A	*	5/1995	Sadler	351/47
5,642,177	A		6/1997	Nishioka	351/47
5,682,222	A		10/1997	Chao	351/111
5,696,571	A		12/1997	Spencer et al.	351/47
5,737,054	A		4/1998	Chao	351/47
5,877,838	A		3/1999	Chao	351/47
5,882,101	A		3/1999	Chao	351/47
5,883,688	A		3/1999	Chao	351/47
5,883,689	A		3/1999	Chao	351/47
5,929,964	A		7/1999	Chao	351/47
6,012,811	A		6/2000	Chao et al.	351/47
6,092,896	A		7/2000	Chao et al.	351/47
6,109,747	A		8/2000	Chao	351/47
6,170,948	B1		1/2001	Chao	351/47

FOREIGN PATENT DOCUMENTS

EP	0743545		11/1996
FR	915421		11/1946
FR	1037755		9/1953
FR	1061253		4/1954
FR	2483632		4/1981
FR	1266652		12/1981
FR	2657436		7/1991
GB	846425		8/1960
GB	855268		11/1960
JP	44-15392		7/1969
JP	54-111841		9/1979
JP	54-111842		9/1979
JP	55-50217		4/1980
JP	56-29209		3/1981
JP	57-184910		11/1982
JP	612621		1/1986
JP	1-136114		5/1989
JP	2-109325		8/1990
JP	5-157997		6/1993
JP	5-40493		10/1993
JP	3011174	*	5/1995
JP	7-128620		5/1995
RU	220885		6/1968
TW	274588		4/1996
WO	WO 90/09611		8/1990
WO	WO 96/23241		8/1996

OTHER PUBLICATIONS

English language abstract of Japanese Publication No. 56–29209.

English language abstract of Japanese Publication No. 44–15392.

English language abstract of Japanese Publication No. 5–157997.

English language abstract of Japanese Publication No. 612621.

English language abstract of Japanese Publication No. 5–40493.

English language abstract of German Publication No. 9216919.

English language abstract of German Publication No. 1797366.

English language abstract of German Publication No.43 16 698.

English language abstract of German Publication No.39333310.

English language abstract of German Publication No.3921987.

English language abstract of German Publication No.3920879.

English language abstract of German Publication No.3919489.

English language abstract of German Publication No.3905041.

English language abstract of French Publication No.1266652.

English language abstract of French Publication No.1037755.

English language abstract of French Publication No.2,657,436.

English language abstract of French Publication No.2,483,632.

English language abstract of French Publication No.915,421.

English language abstract of Switzerland Publication No.572,222.

English language abstract of Russian Publication No.220885.

English language abstract of Taiwan Publication No.274588.

English language abstract of Chinese Publication No.1117593.

Documents describing Twincome in a Patent Opposition Proceeding in Germany initiated by Pentax, on or around Apr. 30, 1997.

* cited by examiner

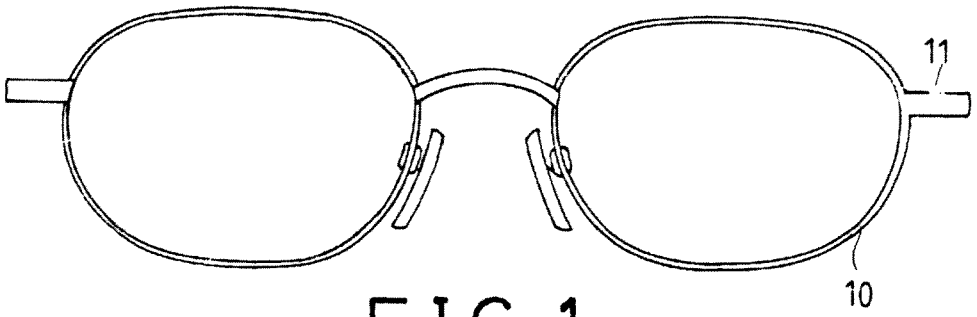

FIG. 1

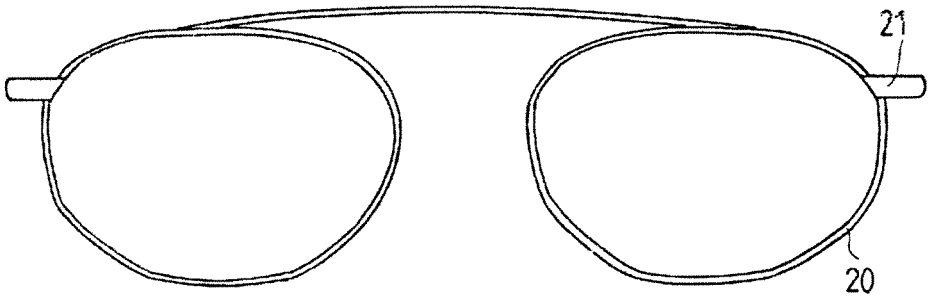

FIG. 2

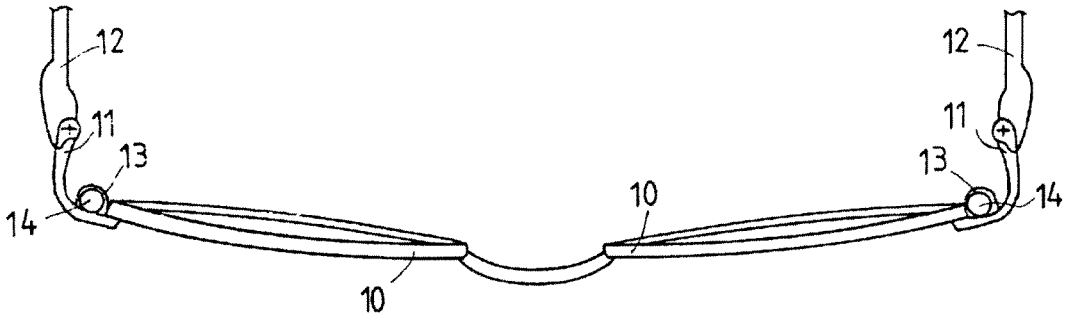

FIG. 3

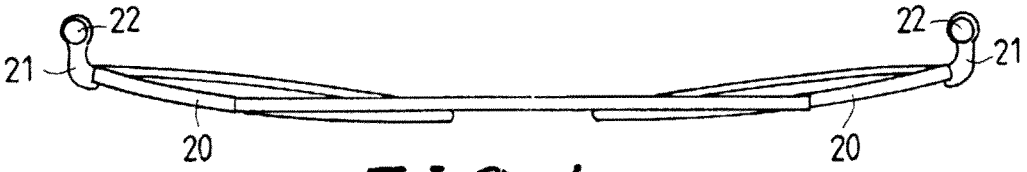

FIG. 4

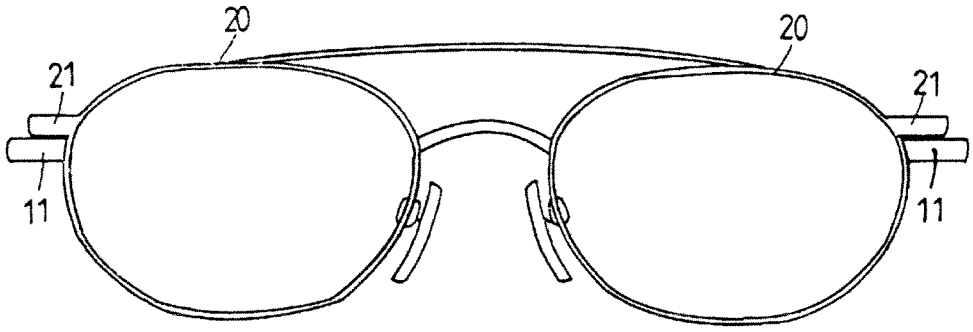

FIG. 5

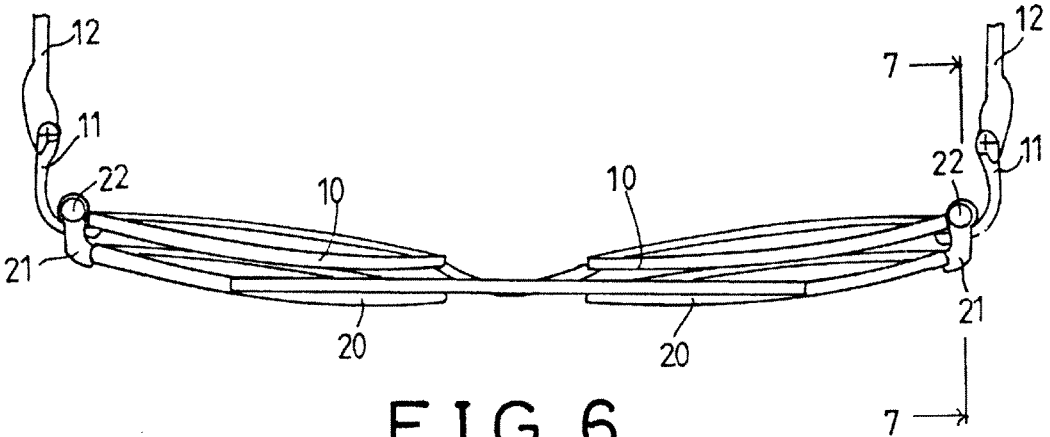

FIG. 6

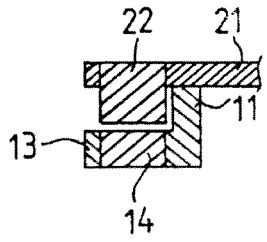

FIG. 7

AUXILIARY LENSES FOR EYEGLASSES

Matter enclosed in heavy brackets [ ] appears in the original patent but forms no part of this reissue specification; matter printed in italics indicates the additions made by reissue.

BACKGROUND OF THE INVENTION

1. Field of the Invention

The present invention relates to auxiliary lenses, and more particularly to auxiliary lenses for eyeglasses.

2. Description of the Prior Art

A typical spectacle frame having an attachable one-piece slide-on rim is disclosed in U.S. Pat. No. 4,070,103 to Meeker. In Meeker, a spectacle frame includes a magnetic material secured to the peripheral portion thereof for facilitating attachment of the auxiliary lens rim cover to the spectacle frame. The lens rim cover also includes a magnetic strip for engaging with the magnetic material of the spectacle frame.

Another typical eyeglasses are disclosed in U.S. Pat. No. 5,416,537 to Sadler and comprise first magnetic members secured to the temporal portions of the frames and second magnetic members secured to the corresponding temporal portions of the auxiliary lenses.

In both of the eyeglasses, the auxiliary lenses are simply attached to the frames by magnetic materials and have no supporting members for preventing the auxiliary lenses from moving downward relative to the frames such that the auxiliary lenses may easily move downward relative to the frames and may be easily disengaged from the frames when the users conduct jogging or jumping exercises. In addition, the magnetic materials are embedded in the frames of the primary lenses and of the auxiliary lenses such that the frames should be excavated with four or more cavities for engaging with the magnetic members and such that the strength of the frames is greatly decreased.

The present invention has arisen to mitigate and/or obviate the afore-described disadvantages of the conventional spectacle frames.

SUMMARY OF THE INVENTION

The primary objective of the present invention is to provide auxiliary lenses which may be stably secured and supported on the frames.

In accordance with one aspect of the invention, there is provided an eyeglass device comprising a primary spectacle frame for supporting primary lenses therein, the primary spectacle frame including two side portions each having an extension extended therefrom for pivotally coupling a leg means thereto, the primary spectacle frame including two rear and side portions each having a projection secured thereto, the primary spectacle frame including an upper portion, a pair of first magnetic members secured in the projections respectively, an auxiliary spectacle frame for supporting auxiliary lenses therein, the auxiliary spectacle frame including two side portions each having an arm extended therefrom for extending over and for engaging with the upper portion of the primary spectacle frame, and a pair of second magnetic members secured to the arms respectively for engaging with the first magnetic members of the primary spectacle frame so as to secure the auxiliary spectacle frame to the primary spectacle frame. The arms are engaged with and supported on the upper portion of the primary spectacle frame so as to allow the auxiliary spectacle frame to be stably supported on the primary spectacle frame and so as to prevent the auxiliary spectacle frame from moving downward relative to and so as to prevent the auxiliary spectacle frame from being disengaged from the primary spectacle frame.

The projections and the first magnetic members are arranged lower than the upper portion of the primary spectacle frame, the second magnetic members are extended downward toward the projections for hooking on the primary spectacle frame so as to further secure the auxiliary spectacle frame to the primary spectacle frame. The auxiliary spectacle frame may be prevented from disengaging from the primary spectacle frame.

Further objectives and advantages of the present invention will become apparent from a careful reading of a detailed description provided hereinbelow, with appropriate reference to accompanying drawings.

BRIEF DESCRIPTION OF THE DRAWINGS

FIGS. **1** and **2** are front views of a spectacle frame and of auxiliary lenses in accordance with the present invention respectively;

FIGS. **3** and **4** are top views of the spectacle frame and of the auxiliary lenses respectively;

FIG. **5** is a front view of the spectacle frame and the auxiliary lenses combination;

FIG. **6** is a top view of the spectacle frame and the auxiliary lenses combination; and

FIG. **7** is a cross sectional view taken along lines **7**—**7** of FIG. **6**,

DETAILED DESCRIPTION OF THE PREFERRED EMBODIMENT

Referring to the drawings, and initially to FIGS. **1** to **4**, an eyeglass device in accordance with the present invention comprises a primary spectacle frame **10** for supporting primary lenses therein. The primary spectacle frame **10** includes two side portions each having an extension **11** extended rearward therefrom for pivotally coupling leg **12** thereto. The primary spectacle frame **10** includes two projections **13** secured to the rear and side portions thereof for supporting magnetic members **14** therein. An auxiliary spectacle frame **20** is provided for supporting the auxiliary lenses therein and includes two side portions each having an arm **21** extended rearward therefrom for extending over and for engaging with the upper portion of the primary spectacle frame **10** (FIGS. **5** and **6**). The auxiliary spectacle frame **20** also includes two magnetic members **22** secured to the arms **21** therefor for engaging with the magnetic members **14** of the primary spectacle frame **10** such that the auxiliary spectacle frame **20** may be stably supported on the primary spectacle frame **10**, best shown in FIGS. **5** and **6**.

It is to be noted that the arms **21** are engaged with and are supported on the upper portion of the primary spectacle frame **10** such that the auxiliary spectacle frame **20** may be stably supported and secured to the primary spectacle frame **10**. The auxiliary spectacle frame **20** will not move downward relative to the primary spectacle frame and will not be easily disengaged from the primary spectacle frame when the users conduct jogging or jumping exercises.

It is further to be noted that the projections **13** and the magnetic members **14** are secured to the primary spectacle frame **10** and the magnetic members **22** are secured in the arms **21**. The magnetic members **14**, **22** are not embedded in the frames **10**, **20** such that the frames **10**, **20** are not required to be formed with cavities therein and such that the strength of the frames **10**, **20** will not be decreased.

As shown in FIGS. 3–7, the engaging surfaces between magnetic members 14 in primary spectacle frame 10 and the magnetic members 22 in the auxiliary spectacle frame 20 lie in a plane that is substantially horizontal when the eyeglass device is worn.

Referring next to FIG. **7**, it is preferable that the projections **13** and the magnetic members **14** are located slightly lower than the upper portion of the primary spectacle frame **10**; and the end portions of the arms **21** and/or the magnetic members **22** are slightly extended downward toward the projections **13** such that the arms **21** and the magnetic members **22** may hook on the primary spectacle frame **10** and such that the auxiliary spectacle frame **20** may further be stably supported and secured to the primary spectacle frame **10**.

In one embodiment, as shown in FIG. 7, magnetic members 14 and 22 are not in contact with each other; magnetic members 14 and 22 are engaged with, but not supported on, each other. Instead, the arm 21 securing the magnetic member 22 is supported on an upper side portion of the primary spectacle frame 10. As shown in FIG. 7, the upper side portion can be an upper part of the side portion securing the projection 13.

Accordingly, the eyeglass device in accordance with the present invention includes an auxiliary spectacle frame that may be stably secured to the primary spectacle frame and will not move downward relative to the primary spectacle frame and will not be easily disengaged from the primary spectacle frame when the users conduct jogging or jumping exercises. In addition, the magnetic members are not embedded in the frames such that the strength of the frames will not be decreased.

Although this invention has been described with a certain degree of particularity, it is to be understood that the present disclosure has been made by way of example only and that numerous changes in the detailed construction and the combination and arrangement of parts may be resorted to without departing from the spirit and scope of the invention as hereinafter claimed.

I claim:

1. An eyeglass device comprising:

a primary spectacle frame for supporting primary lenses therein, said primary spectacle frame including two side portions each having an extension extended therefrom for pivotally coupling a leg means thereto, said primary spectacle frame including two rear and side portions each having a projection secured thereto, said primary spectacle frame including an upper side portion,

a pair of first magnetic members secured in said projections respectively,

an auxiliary spectacle frame for supporting auxiliary lenses therein, said auxiliary spectacle frame including two side portions each having an arm extended therefrom for extending over and for engaging with said upper side portion of said primary spectacle frame, and

a pair of second magnetic members secured to said arms respectively for engaging with said first magnetic members of said primary spectacle frame so as to secure said auxiliary spectacle frame to said primary spectacle frame,

said arms being engaged with and supported on said upper side portion of said primary spectacle frame so as to allow said auxiliary spectacle frame to be stably supported on said primary spectacle frame and so as to prevent said auxiliary spectacle frame from moving downward relative to said primary spectacle frame and so as to prevent said auxiliary spectacle frame from being disengaged from said primary spectacle frame.

2. An eyeglass device according to claim **1**, wherein said projections and said first magnetic members are arranged lower than said upper side portion of said primary spectacle frame, said second magnetic members are extended downward toward said projections for hooking on said primary spectacle frame so as to further secure said auxiliary spectacle frame to said primary spectacle frame.

3. An eyeglass device as recited in claim 1 wherein the first and the second magnetic members are magnets.

4. An eyeglass device comprising:

a primary spectacle frame for supporting primary lenses therein with the lenses defining a vertical plane, the primary spectacle frame including two side portion extensions extended therefrom for pivotally coupling a leg thereto and a first magnet having a horizontal surface and secured to said side portion extensions of the primary spectacle frame, and

an auxiliary spectacle frame for supporting auxiliary lenses therein, and for disposing in front of the primary spectacle frame, the auxiliary spectacle frame including two auxiliary side portions, the auxiliary spectacle frame including two second magnets, each secured to one of the auxiliary side portions for respectively engaging the horizontal surface of one of the first magnets so as to secure the auxiliary spectacle frame to the primary spectacle frame.

5. An eyeglass device as recited in claim 4 wherein at least an end portion of one auxiliary side portion extends downward toward one of the side portions of the primary spectacle frame for hooking on the primary spectacle frame such that the auxiliary spectacle frame is further stably supported and secured to the primary spectacle frame.

6. An eyeglass device comprising:

a primary spectacle frame for supporting primary lenses therein;

the primary spectacle frame including two side portion extensions extended therefrom for pivotally coupling a leg thereto; and

the primary spectacle frame including two first magnetic members respectively having a horizontal surface and being secured to one of the side portions extensions of the primary spectacle frame; and

an auxiliary spectacle frame for supporting auxiliary lenses therein, and for disposing in front of the primary spectacle frame, the auxiliary spectacle frame including two auxiliary side portions, wherein the auxiliary spectacle frame further includes two second magnetic members each secured to one of the auxiliary side portions and having a horizontal surface for coupling a corresponding horizontal surface of one of the first magnetic members so as to secure the auxiliary spectacle frame to the primary spectacle frame.

7. An eyeglass device as recited in claim 6 wherein the second magnetic members are magnets.

8. An eyeglass device as recited in claim 6 wherein the first magnetic members are magnets.

9. An eyeglass device as recited in claim 6 wherein the first and the second magnetic members are magnets.

10. An eyeglass device as recited in claim 9 wherein the auxiliary side portions are respectively supported on a corresponding extension and the first magnetic members are not in contact with the second magnetic members.

11. An eyeglass device as recited in claim 6 wherein the auxiliary side portions are respectively supported on a corresponding extension and the first magnetic members are not in contact with the second magnetic members.

12. An eyeglass device comprising:

a primary spectacle frame having two side portion extensions, each of said extensions having a front side, a rear side and a first magnetic member secured to said rear side,

Case 0:09-cv-61515-MGC Document 39-2 Entered on FLSD Docket 12/23/2009 Page 7 of 11

an auxiliary spectacle frame including two side portions each having an arm extended therefrom for extending toward and beyond said rear side, each of said arms containing a second magnetic member, and

said arms and said first and second magnetic members cooperating to stably support said auxiliary spectacle frame on said primary spectacle frame.

13. The eyeglass device according to claim 12, wherein said first and second magnets members are magnets.

14. An eyeglass device comprising:

a primary spectacle frame for supporting primary lenses therein, said primary spectacle frame including two side portion extensions extended therefrom for pivotally coupling a leg, each of said extensions also including an outer side, an inner side, and a top side with a projection secured to said inner side, each of said projections respectively securing a first magnetic member, and

an auxiliary spectacle frame for supporting auxiliary lenses therein, said auxiliary spectacle frame including two side portions each having an arm extended therefrom, said auxiliary spectacle frame further including a pair of second magnetic members secured to said arms respectively for engaging said first magnetic members of said primary spectacle, each of said arms adapted to extend over one of said top sides.

15. The eyeglass device according to claim 14, wherein said first and second magnets members are magnets.

16. An eyeglass device comprising:

a primary spectacle frame having two side portion extensions, each of said extensions having a front side and a rear side with a first magnetic member secured to said rear side, and

an auxiliary spectacle frame including two side portions, each of said side portions having an arm extended therefrom for extending beyond said rear side, said arms containing corresponding second magnetic members, said arms and said first and second magnetic members supporting said auxiliary spectacle frame on said primary spectacle frame.

17. An eyeglass device comprising:

a primary spectacle frame having two side portion extensions, each of said extensions extending laterally away from one another and rearwardly of said frame, each of said extensions having a top side, a front side and a rear side with a first magnetic member secured to said rear side, and

an auxiliary spectacle frame including two side portions each having an arm extending from said front side over said top side, said arms containing corresponding second magnetic members, said arms and said first and second magnetic members supporting said auxiliary spectacle frame on said primary spectacle frame.

18. An eyeglass device comprising:

a primary spectacle frame having two side portion extensions extending rearwardly therefrom having a top side and a rear side with a first magnetic member secured thereto, and

an auxiliary spectacle frame including two arms for extending over a corresponding top side of said extensions, said arms respectively containing second magnetic members for cooperation with said first magnetic members and downwardly extended end portions for hooking said auxiliary spectacle frame to said primary spectacle frame, said arms and said first and second magnetic members supporting said auxiliary spectacle frame on said primary spectacle frame.

19. An eyeglass device comprising:

a primary spectacle frame for supporting primary lenses therein having two side portion extensions, said side portion extensions each having a top side and a projection attached to a rear side thereof, each of said projections securing a first magnetic member, and

an auxiliary spectacle frame including two arms for extending over and engaging a corresponding top side of said side portion extensions, said arms respectively containing second magnetic members and downwardly extended end portions, at least said arms and said first and second magnetic members supporting said auxiliary spectacle frame on said primary spectacle frame.

20. An eyeglass device comprising:

a primary spectacle frame for supporting primary lenses therein having two side portion extensions having a top side and a rear side with a first magnetic member secured to said rear side, and

an auxiliary spectacle frame including two arms for extending over and engaging a corresponding top side of said extensions, said arms respectively containing downwardly extended second magnetic members for hooking said auxiliary spectacle frame to said primary spectacle frame, said arms and said first and second magnetic members cooperating to support said auxiliary spectacle frame on said primary spectacle frame.

21. An eyeglass device comprising:

a primary spectacle frame for supporting primary lenses therein having an extension at each side for pivotal coupling to a leg, each of said extensions having a front side, a rear side, a top side and a projection attached to said rear side, each of said projections securing first magnetic members, and

an auxiliary spectacle frame for supporting auxiliary lenses therein and including two side portions, each of said side portions having an arm extended therefrom and adapted to extend from said front side to beyond said rear side of said extension of said primary spectacle frame, said arms each containing corresponding second magnetic members, said arms locating each of said second magnetic members in an engagement position to engage respective first magnetic members of said primary spectacle frame and inhibit relative vertical movement therebetween.

22. An eyeglass device comprising:

a primary spectacle frame for supporting primary lenses therein and having two side portion extensions extending rearwardly therefrom and having a front side, a rear side, a top side, and a rear end, each of said rear ends pivotally coupling a leg configured to conform to a user at a distal end thereof, each of said extensions of said primary spectacle frame further having a projection attached to each of said rear sides, and a pair of first magnetic members respectively secured in said projections, said first magnetic members capable of engaging second magnetic members of an auxiliary spectacle frame so that lenses of an auxiliary spectacle frame are located in front of said primary lenses.

23. An eyeglass device comprising:

an auxiliary spectacle frame for supporting auxiliary lenses therein, said frame including a front side, a rear side, and oppositely positioned side portions, each of said side portions having an arm extended therefrom, each of said arms having a rearwardly directed free end for securing a magnetic member, and a pair of magnetic members respectively secured in the free ends of

said arms, said arms and said pair of magnetic members adapted to extend across respective side portions of a primary spectacle frame so that said pair of magnetic members can vertically engage corresponding magnetic members on a primary spectacle frame.

24. An eyeglass device comprising:

an auxiliary spectacle frame for supporting auxiliary lenses therein, said frame including a front side, a rear side, and oppositely positioned side portions, each of said side portions having an arm extended therefrom, each of said arms having a rearwardly directed end for securing a magnetic member, a pair of magnetic members respectively located at said ends of said arms, each of said ends further including a downwardly extended end portion for hooking onto a primary spectacle, said arms and said pair of magnetic members adapted to extend across respective side portions of a primary spectacle frame so that said pair of magnetic members can engage corresponding magnetic members on a primary spectacle frame.

25. An eyeglass device comprising:

a primary spectacle frame having two side portion extensions extending therefrom and adapted to pivotally couple a leg thereto, said extensions each having a front side, a rear side, a top side and a projection extending from said rear side, each of said projections securing a first magnetic member, and

an auxiliary spectacle frame including two side portions each having an arm extended therefrom for extending over said top side, said arms containing corresponding second magnetic members, said arms with said second magnetic members engaging said first magnetic members thereby securing said auxiliary frame to said primary spectacle frame to prevent said auxiliary spectacle frame from moving downward relative to and/or disengaging from said primary spectacle frame.

26. An eyeglass device, comprising:

a primary spectacle frame for supporting primary lenses therein;

a pair of extensions mounted to said primary spectacle frame at laterally spaced locations and each projecting toward a wearer when the eyeglass device is worn;

a first pair of magnetic members, each affixed to a respective one of a pair of projections attached to a rear side of said extensions so as to be concealed by said extensions when said eyeglass is worn, said first pair of magnetic members each having a first surface;

an auxiliary spectacle frame for supporting auxiliary lenses therein;

a pair of spaced apart arms mounted to said auxiliary spectacle frame and projecting toward the wearer when the eyeglass device is worn; and

a second pair of magnetic members, each affixed to said pair of arms, said second pair of magnetic members each having a second surface, said auxiliary spectacle frame capable of being supported by said primary spectacle frame by mounting said second pair of magnetic members to said first pair of magnetic members, said first and second surfaces being oppositely directed so that said surfaces are juxtaposed.

27. An eyeglass device according to claim 26 wherein said auxiliary frame includes an abutment surface for engagement with an oppositely directed surface on said primary frame to inhibit relative movement therebetween.

28. An eyeglass device according to claim 27 wherein said abutment surface is provided on each of said arms on said auxiliary frame.

29. An eyeglass device according to claim 27 wherein said extensions are located adjacent respective ones of said arms.

30. An eyeglass device according to claim 29 wherein said auxiliary frame includes an abutment surface for engagement with an oppositely directed surface on said primary frame to inhibit relative movement therebetween.

31. An eyeglass device comprising:

a primary spectacle frame having two side portion extensions extending rearwardly therefrom with a top side and a rear side with a first magnetic member secured thereto, and

an auxiliary spectacle frame including two arms for extending over a corresponding top side of said extensions, said arms respectively containing second magnetic members for cooperation with said first magnetic members and downwardly extended end portions for hooking said auxiliary spectacle frame to said primary spectacle frame, said arms and said first and second magnetic members supporting said auxiliary spectacle frame on said primary spectacle frame, wherein at least one of said first magnetic members and said second magnetic members are magnets.

32. An eyeglass device comprising:

a primary spectacle frame having two side portion extensions, each of said extensions having a front side, a rear side and a first magnetic member secured to said rear side,

an auxiliary spectacle frame including two side portions each having an arm extended therefrom and traversing said extension from said front side to said rear side, each of said arms containing a second magnetic member, and

said first and second magnetic members engaging one another to support said auxiliary spectacle frame on said primary spectacle frame.

33. An eyeglass device comprising:

a primary spectacle frame having two side portion extensions, each of said extensions having a front side, a rear side and a first magnetic member secured to said rear side,

an auxiliary spectacle frame including two side portions each having an arm extended therefrom, each of said arms containing a second magnetic member, said arms extending across said extension from said front side to said rear side, and

said arms and said first and second magnetic members stably support said auxiliary spectacle frame on said primary spectacle frame.

34. An eyeglass device comprising:

a primary spectacle frame having two side portion extensions with a front side, a rear side and a first magnetic member

an auxiliary spectacle frame including two side portions each having an arm extended therefrom, each of said arms containing a second magnetic member, said arms extending across a respective extension from said front side to said rear side so that said first and second magnetic members engage one another whereby said auxiliary spectacle frame is supported by said primary spectacle frame.

* * * * *

US00RE37545F1

(12) EX PARTE REEXAMINATION CERTIFICATE (6678th)

United States Patent
Chao

(10) **Number: US RE37,545 F1**
(45) **Certificate Issued: Mar. 3, 2009**

(54) **AUXILIARY LENSES FOR EYEGLASSES**

(75) Inventor: **Richard Chao**, Chia Yi Hsien (TW)

(73) Assignee: **Aspex Eyewear, Inc.**, Miramar, FL (US)

Reexamination Request:
No. 90/008,864, Sep. 13, 2007

Reexamination Certificate for:
Patent No.: **Re. 37,545**
Issued: **Feb. 12, 2002**
Appl. No.: **09/182,862**
Filed: **Oct. 21, 1998**

Related U.S. Patent Documents
Reissue of:
(64) Patent No.: **5,568,207**
Issued: **Oct. 22, 1996**
Appl. No.: **08/554,854**
Filed: **Nov. 7, 1995**

(51) **Int. Cl.**
G02C 07/08 (2006.01)
G02C 09/00 (2006.01)

(52) **U.S. Cl.** **351/57**; 351/47
(58) **Field of Classification Search** ..... None
See application file for complete search history.

(56) **References Cited**

U.S. PATENT DOCUMENTS

188,246	A	3/1877	Johnson
1,613,765	A	1/1927	Nerney
1,679,233	A	7/1928	Strauss
1,907,749	A	5/1933	Dechau
1,936,319	A	11/1933	Wingate
2,065,122	A	12/1936	Diggins
2,117,436	A	5/1938	Lindblom
2,141,063	A	12/1938	Euler
2,254,637	A	9/1941	Welsh
2,492,072	A	12/1949	Tapner
2,587,472	A	2/1952	Hoffmaster
D170,435	S	9/1953	Weissman
2,737,847	A	3/1956	Tessauro
2,770,168	A	11/1956	Tessauro
3,498,701	A	3/1970	Miller

(Continued)

FOREIGN PATENT DOCUMENTS

CA	773287	12/1967
CH	572222	1/1976
CN	1117593	2/1996
DE	1797366	1/1971
DE	G 85 87 761.5	6/1985
DE	G 88 06 898.6	10/1988
DE	3905041	8/1990
DE	3920879	1/1991
DE	3921987	1/1991
DE	39333310	1/1991
DE	G 92 16 919.8	2/1993
DE	43 16 698	11/1994
DE	29518590	11/1995
EP	0469699	2/1992
EP	0502796 B1	2/1995

(Continued)

OTHER PUBLICATIONS

"Twincome–Pentax Documents" Describing Twincome in A Patent Opposition in Germany initiated by Pentax, on or about Apr. 30, 1997.

Primary Examiner—Glenn K. Dawson

(57) **ABSTRACT**

An eyeglass device includes a primary and an auxiliary spectacle frames for supporting lenses. The primary spectacle frame includes two legs pivotally coupled to two side extensions and includes two magnetic members secured in the rear and side portions. The auxiliary spectacle frame includes two legs engaged on the primary spectacle frame and each having a magnetic member for engaging with the magnetic members of the primary spectacle frame so as to secure the spectacle frames together and so as to prevent the auxiliary spectacle frame from moving downward relative to the primary spectacle frame.

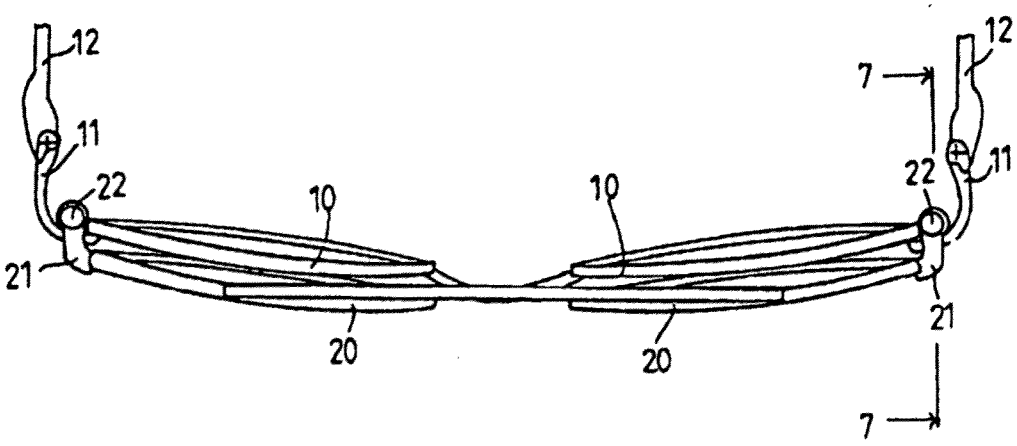

U.S. PATENT DOCUMENTS

3,531,188	A		9/1970	LeBlanc et al.	
3,531,190	A		9/1970	LeBlanc	
3,536,385	A		10/1970	Johnston	
3,565,517	A		2/1971	Gitlin et al.	
3,582,192	A		6/1971	Gitlin et al.	
D221,480	S		8/1971	Tagnon	
3,838,914	A		10/1974	Fernandez	
4,021,892	A		5/1977	Piper	
4,070,103	A		1/1978	Meeker	
4,070,105	A		1/1978	Marzouk	
4,196,981	A		4/1980	Waldrop	
4,217,037	A		8/1980	Lemelson	
4,380,379	A		4/1983	Ahern	
4,432,616	A		2/1984	Kurosaka	
4,466,713	A		8/1984	Tanaka	
4,547,909	A		10/1985	Bell	
4,685,782	A		8/1987	Lhospice	
D291,808	S		9/1987	Meyerspeer	
4,822,158	A		4/1989	Porsche	
4,878,749	A		11/1989	McGee	
D307,756	S		5/1990	Porsche	
4,988,181	A		1/1991	Riach	
5,181,051	A		1/1993	Townsend et al.	
5,243,366	A		9/1993	Blevins	
5,321,442	A	*	6/1994	Albanese	351/44
5,389,981	A		2/1995	Riach	
5,410,763	A		5/1995	Bolle	
5,416,537	A		5/1995	Sadler	
5,642,177	A		6/1997	Nishioka	
5,682,222	A		10/1997	Chao	
5,684,558	A		11/1997	Hamamoto	
5,696,571	A		12/1997	Spencer et al.	
5,710,614	A		1/1998	Cereda	
5,724,118	A		3/1998	Krebs	
5,737,054	A		4/1998	Chao	
5,867,244	A		2/1999	Martin	
5,877,838	A		3/1999	Chao	
5,882,101	A		3/1999	Chao	
5,883,688	A		3/1999	Chao	
5,883,689	A		3/1999	Chao	
5,889,574	A		3/1999	Gandl-Schiller	
5,912,718	A		6/1999	Murai et al.	
5,914,768	A		6/1999	Hyoi	
5,929,964	A		7/1999	Chao	
6,012,811	A		1/2000	Chao et al.	
6,092,896	A		7/2000	Chao et al.	
6,109,747	A		8/2000	Chao	
6,149,269	A		11/2000	Madison	
6,170,948	B1		1/2001	Chao	
7,040,751	B2		5/2006	Madison	

FOREIGN PATENT DOCUMENTS

EP	0743545		11/1996
FR	915421		11/1946
FR	1037755		9/1953
FR	1061253		4/1954
FR	2483632		4/1981
FR	1266652		12/1981
FR	2657436		7/1991
GB	846425		8/1960
GB	855268		11/1960
JP	57-184910		5/1956
JP	44-15392		7/1969
JP	54-111841		9/1979
JP	54-111842		9/1979
JP	54-163052		12/1979
JP	55-50217		4/1980
JP	55-083022		6/1980
JP	55-133014		10/1980
JP	55-135814		10/1980
JP	56-29209		3/1981
JP	56-925214		8/1981
JP	56-153317		11/1981
JP	57-178215		11/1982
JP	57-184910		11/1982
JP	61-2621		1/1986
JP	63-188626		12/1988
JP	1-136114		5/1989
JP	2-109325		8/1990
JP	5-157997		6/1993
JP	05-196899		8/1993
JP	5-40493		10/1993
JP	05-289029		11/1993
JP	06-265828		9/1994
JP	06-331943		12/1994
JP	07-028001		1/1995
JP	07-101722		2/1995
JP	07-056123		3/1995
JP	3011174		5/1995
JP	7-128620		5/1995
JP	07-156856		5/1995
JP	07-244259		9/1995
JP	08-050263		2/1996
JP	9-043544	A	2/1997
RU	220885		6/1968
TW	274588		4/1996
WO	WO 90/09611		8/1990
WO	WO-95/18986		7/1995
WO	WO-95/23995		9/1995
WO	WO 96/23241		8/1996

* cited by examiner

EX PARTE REEXAMINATION CERTIFICATE ISSUED UNDER 35 U.S.C. 307

THE PATENT IS HEREBY AMENDED AS INDICATED BELOW.

Matter enclosed in heavy brackets [ ] appeared in the original patent but was deleted by the reissue patent; matter printed in italics was added by the reissue patent. Matter enclosed in heavy double brackets [[ ]] appeared in the reissue patent but is deleted by this reexamination certificate; matter printed in boldface is added by this reexamination certificate.

AS A RESULT OF REEXAMINATION, IT HAS BEEN DETERMINED THAT:

Claims **1–9**, **12**, **13**, **16–20**, **24**, and **31–33** is confirmed.

Claims **23** and **34** are determined to be patentable as amended.

New claim **35** is added and determined to be patentable.

Claims **10**, **11**, **14**, **15**, **21**, **22** and **25–30** were not reexamined.

23. An eyeglass device comprising:

an auxiliary spectacle frame for supporting auxiliary lenses therein, said frame including a front side, a rear side, and oppositely positioned side portions, each of said side portions having an arm extended therefrom, each of said arms having a rearwardly directed free end for securing a magnetic member having a horizontal surface, *and a pair of magnetic members respectively secured in the free ends of said arms, said arms and said pair of magnetic members adapted to extend across respective side portions of a primary spectacle frame so that said pair of magnetic members* having a horizontal surface *can vertically engage corresponding magnetic* [[members]] member surfaces *on a primary spectacle frame.*

34. An eyeglass device comprising:

a primary spectacle frame having two side portion extensions with a front side, a rear side and a first magnetic member at said rear side,

an auxiliary spectacle frame including two side portions each having an arm extended therefrom, each of said arms containing a second magnetic member, said arms extending across a respective extension from said front side to said rear side so that said first and second magnetic members engage one another whereby said auxiliary spectacle frame is supported by said primary spectacle frame.

35. The eyeglass device according to claim 23, wherein, said magnetic members of said auxiliary spectacle frame are magnets.

* * * * *