UNITED STATES DISTRICT COURT
SOUTHERN DISTRICT OF FLORIDA

04-21140

Case No.

NISSIM CORP.,

Plaintiff,

v.

CLEARPLAY, INC.,
MATTHEW JARMAN and LEE JARMAN,

Defendants.
_____/

CIV - HUCK

MAGISTRATE JUDGE
TURNOFF

FILED by _____ D.C.
INTAKE

MAY 13 2004

CLARENCE MADDOX
CLERK U S. DIST. CT.
S.D. OF FLA. - MIAMI

COMPLAINT

Plaintiff Nissim Corp., by and through its undersigned counsel, hereby sues Defendants ClearPlay, Inc., Matthew Jarman and Lee Jarman, and for its Complaint alleges as follows:

THE PARTIES

1. Plaintiff Nissim Corp. ("Nissim") is a corporation organized and existing under the laws of the state of Florida with its principal place of business in Boca Raton, Florida.

2. Defendant ClearPlay, Inc. ("ClearPlay") is a corporation organized and existing under the laws of the state of Utah with its principal place of business in Salt Lake City, Utah.

3. Defendant Matthew Jarman is an individual residing in Salt Lake City, Utah.

4. Defendant Lee Jarman is an individual residing in Salt Lake City, Utah.

JURISDICTION AND VENUE

5. This Court has federal question jurisdiction of this action under 28 U.S.C. §§ 1331 and 1338(a) because Nissim seeks relief under the Patent Act, including remedies for patent infringement of several United States Patents owned by Nissim.

6. This Court has supplemental jurisdiction under 28 U.S.C. § 1367(a) over Nissim's related state law claims for misappropriation of trade secrets and breach of contract.

7. This Court also has diversity jurisdiction under 28 U.S.C. § 1332(a) because this action is between citizens of different states and the amount in controversy exceeds $75,000, exclusive of interest and costs.

8. ClearPlay is subject to personal jurisdiction in this state under Florida Statutes § 48.193 because ClearPlay has transacted business in this state, contracted to supply services or products in this state, and caused tortious injury in this state. Matthew Jarman and Lee Jarman are subject to personal jurisdiction in this state under Florida Statutes § 48.193 because they have transacted business in this state, breached a contract in this state, and caused tortious injury in this state.

9. Venue is proper pursuant to 28 U.S.C. §§ 1391 and 1400(b) because a substantial part of the events giving rise to these claims occurred in this judicial district, because Nissim has suffered injury in this district, because ClearPlay resides in this district under the patent venue statute, because ClearPlay has committed acts of patent infringement in this district, and because ClearPlay and Matthew and Lee Jarman have committed misappropriation of trade secrets in this district, and because Matthew and Lee Jarman have committed breach of contract in this district.

STROOCK & STROOCK & LAVAN LLP • MIAMI • NEW YORK • LOS ANGELES
WACHOVIA FINANCIAL CENTER, 200 SOUTH BISCAYNE BLVD, [illegible] MIAMI, FL 33131-5323
TEL 305.358.9900 FAX 305.789.9302 WWW.[illegible].COM

FACTUAL BACKGROUND

10. Plaintiff Nissim is the owner of an extraordinarily valuable portfolio of 20 related United States Patents and a number of pending patent applications (collectively the "Nissim Patents"). The Nissim Patents cover, among other things, multiple features that are required by certain industry adopted specifications (DVD Specifications for Read Only Disc Part 3 Video Specifications, Version 1.1, December 1997 – hereinafter the "DVD Specifications") and that are incorporated in all consumer electronic products ("DVD-Devices") capable of playing digital video discs ("DVDs").

11. Virtually every company that sells DVD-Devices has taken a DVD-Device License from Nissim under the Nissim Patents and pays Nissim running royalties for sales of DVD-Devices. In fact, all of the very same companies that own the DVD-Specifications and which sell DVD-Devices (Hitachi, Ltd., Matsushita Electric Industrial Co., Mitsubishi Electric Corporation, Philips Electronics N.V., Pioneer Corporation, Sony Corporation, Thomson Multimedia S.A., Toshiba Corporation, and Victor Company of Japan, Limited) have taken a DVD-Device License from Nissim under the Nissim Patents and pay Nissim running royalties for sales of those DVD-Devices.

12. In addition to the foregoing companies, Nissim's complete list of licensees, currently totaling approximately ninety (90) companies, also includes, by way of example: Apex Digital, Inc., Dell Products, L.P., Funai Electric Company, Gateway, Inc., Hewlett-Packard Company, International Business Machines Corporation, Samsung Electronics Co. Ltd., and Sharp Corporation.

STROOCK & STROOCK & LAVAN LLP • MIAMI • NEW YORK • LOS ANGELES
WACHOVIA FINANCIAL CENTER, 200 SOUTH BISCAYNE BLVD., SUITE 3160 MIAMI, FL 33131-5323
TEL 305.358.9900 FAX 305.789.9302 WWW.STROOCK.COM

13. To enable a DVD-Device to play different versions of a video, DVDs can include certain segment information. For example, the DVD of the motion picture "Crash," released by New Line Home Video, includes segment information that enables a DVD-Device to play an "NC-17 Rated" version or an "R Rated" version of the motion picture using substantially the same video segments. When playing the R Rated version, the segment information enables the DVD-Device to skip video segments of, for example, more sexually graphic content than that contained on the NC-17 Rated version.

14. The DVD-Specifications provide for the use of segment information carried by a DVD to enable a DVD-Device to play, from within the same DVD, more than one version of a video. This capability of the DVD-Specifications incorporated into all DVD-Devices is covered by the Nissim Patents.

15. The Nissim Patents also teach the distribution of segment information separate from the DVD. Thus, Nissim recognized a separate business opportunity in providing segment information external to a DVD that would enable a specially adapted DVD-Device to play a version of a DVD that was not enabled by the segment information carried by the DVD. For example, in the case of the "Crash" DVD, such a DVD-Device would use segment information provided separate from the DVD to play a version of the DVD that excluded scenes of violence or other objectionable content that would have been included in both the NC-17 and R rated versions.

16. Nissim recognized the need for a separate business model for distributing segment information for videos that did not provide for desirable versions of the video. After filing the first of the Nissim Patents, during February of 1992, Nissim spent a substantial amount of time,

effort, and money to develop that business, first referred to as "Content-Customization," and later as "CustomPlay."

17. By 1995, Nissim had completed development of a software application that was able to utilize segment information of a video provided by a source other than the video itself. In 1997, Nissim registered a web site, www.customplay.com, for the purpose of promoting the CustomPlay software application. By June 1999, the CustomPlay website provided a detailed explanation of the application, the service it provided, identified the U.S. patents protecting CustomPlay, and provided contact information.

18. From the outset, Nissim has recognized the great value of the CustomPlay software and of the business opportunity of separately distributing segment information to users. To make certain that Nissim, alone, could exploit this proprietary business model and intellectual property, Nissim explicitly excluded from the DVD-Device Licenses granted to all of its licensees any use of segment information distributed separate from a DVD to be used by a user to play a version of the DVD. At the time of execution of a DVD-Device License, each of Nissim's licensees understood that the CustomPlay software and the segment information technologies were protected by the Nissim Patents and that any use of those technologies would constitute an unauthorized infringement of the Nissim Patents.

19. On January 25, 2000, Matthew Jarman sent an email with the following subject line: "Very Interested in Custom Play," and the following message addressed to Nissim's chief executive officer: "I am very interested in learning more about Custom Play, Nissim, and your various patents. I worked as an editor for a motion picture company, and I think there is a tremendous market potential for customizable DVD playback. Please contact me ASAP …."

20. On January 26, 2000, in response to Matthew Jarman's inquiry, Nissim sent Matthew Jarman an email with a zip file comprising a demonstration version of the CustomPlay software and a Bilateral Confidentiality Agreement. The opening screen of the CustomPlay software included the following reference to the Nissim Patents: "U.S. patents 5,434,678, 5,589,945, 5,634,849 and pending U.S. patent applications." Matthew Jarman and Lee Jarman executed, as individuals, the Bilateral Confidentiality Agreement, and returned it to Nissim after repeated requests.

21. In a subsequent February 28, 2000 email, Matthew and Lee Jarman indicated: "we need to know which of your patent claims you have exclusively and contractually reserved for Custom Play." The email also requested copies of "existing licensing agreements." In response, Nissim provided a document that explained: "Since the requirements of the DVD Specifications and CustomPlay overlap a substantial number of issued patents, the licensing agreements ... primarily rely on the exclusionary language shown below to protect the core of CustomPlay." The document provided the exclusionary paragraphs of the DVD-License agreements that exclude "navigation data [i.e., segment information] distributed separate from the DVD to be used by the consumer to play a version of the DVD for which the DVD does not provide the necessary navigation data."

22. On March 14, 2000, Matthew Jarman provided Nissim a 37-page PowerPoint presentation entitled "CustomPlay." The presentation made liberal use of the terminology and concepts of the Nissim Patents, the CustomPlay website created by Nissim, and other proprietary concepts introduced by Nissim, including, for example, "Content Preferences," "Individual Preferences For Varying Degrees of Content Explicitness," "Variable-Content Movie,"

"Variable Content Standards," "Introducing CustomPlay: The Standard for Variable Content Movies," "the CustomPlay Standard," and "the CustomPlay GamePlan." The terms "Variable Content Video" appear in the title of four of the Nissim Patents issued prior to March 14, 2000. In the sections of the presentation entitled "CustomPlay Licensing," Jarman also prominently featured the CustomPlay logo.

23. Pursuant to the Bilateral Confidentiality Agreement, Nissim further provided Matthew Jarman a 44-page confidential CustomPlay Business Plan (the "CustomPlay Confidential Information") as well as a videotape containing television news reports evidencing the newsworthiness of CustomPlay.

24. On or about March 2001, unbeknownst to Nissim, and following extensive discussions with Nissim, ClearPlay Inc. ("ClearPlay") was formed by Matthew and Lee Jarman. ClearPlay then began producing and distributing copies of a personal computer software program (the "ClearPlay PC Software") and segment information which enabled a PC to customize the playback of DVDs according to a consumer's content preferences. ClearPlay referred to the segment information as "ClearPlay Filters."

25. On October 2001, through its attorneys, Nissim provided written notice to Matthew Jarman that the ClearPlay PC Software infringed certain of the Nissim Patents and demanded that the infringement cease and desist. The notice also again requested the return of the CustomPlay Confidential Information previously provided under the Bilateral Confidentiality Agreement. Matthew and Lee Jarman have, to date, failed to honor the terms of the Bilateral Confidentiality Agreement and have failed to return the CustomPlay Confidential Information.

STROOCK & STROOCK & LAVAN LLP • MIAMI • NEW YORK • [illegible]
WACHOVIA FINANCIAL CENTER, [illegible] 23
[illegible]

26. On November 2001, William J. Aho, Chief Executive Officer of ClearPlay, requested from Nissim a license under the Nissim Patents. Despite protracted licensing discussions, the parties did not agree on terms and Nissim did not grant ClearPlay a license.

27. As part of the licensing discussions, in September 2002 Nissim provided ClearPlay with a 19-page "CustomPlay License Agreement," a second written notice of ClearPlay's infringement of the Nissim Patents, and a 7-page "Technical Analysis Regarding Infringement of Claims in Nissim's DVD Patent Portfolio." ClearPlay has never provided a substantive response to Nissim's assertions of patent infringement, or any kind of response to the Technical Analysis.

28. Unbeknownst to Nissim during the license discussions, and in the absence of an executed license agreement, ClearPlay in conjunction with Thomson Multimedia SA ("Thomson"), owner of the RCA trademark, worked to incorporate functions of the ClearPlay PC Software into a new DVD player, including ClearPlay Filters produced by ClearPlay, that ClearPlay and its principals knew constitute an unlicensed infringement of the Nissim Patents.

29. On April 2004, ClearPlay and Thomson launched nationally through Wal-Mart this new RCA and ClearPlay-branded DVD player, the RCA Model DRC232N (the "ClearPlay RCA Player"). With the introduction of the ClearPlay RCA Player, ClearPlay abandoned selling the ClearPlay PC Software.

30. The ClearPlay RCA Player and the associated distribution of ClearPlay Filters, distributed with the ClearPlayer RCA Player and separately by ClearPlay, are a willful infringement of the Nissim Patents.

31. ClearPlay's infringement of the claimed teachings of the Nissim Patents extends, by way of example and not limitation, to the ClearPlay RCA Player's use of "Graphic Violence" as a level of explicitness in a content category of "Violence." A comparison of the content preference architecture implemented in the abandoned ClearPlay PC Software to the content preference architecture implemented in the ClearPlay RCA Player clearly indicates the extent to which ClearPlay has intentionally utilized, without authorization, the protected teachings of the Nissim Patents.

32. ClearPlay has also misappropriated, through unauthorized disclosures by Matthew and Lee Jarman in violation of the Bilateral Confidentiality Agreement, various business concepts for commercializing the CustomPlay Confidential Information.

33. Further, the PowerPoint presentation that Matthew Jarman provided Nissim admitted that: "The CustomPlay trademark is the Consumer Standard for: Communicating to consumers which movies and players to purchase to satisfy their demand for preference-based movie customization." The PowerPoint presentation also recognized that CustomPlay would: "Be [the] first Standard to market and first to attract editorial coverage regarding movie customization." Yet, Matthew and Lee Jarman willfully created a company, ClearPlay, to produce products that i) consciously disregard the Nissim Patents; ii) misappropriated the CustomPlay Confidential Information; and iii) interfered with Nissim business relations with firms that had executed Nissim's DVD-Device License. The resulting losses to Nissim of not being the "first Standard to market" and "first to attract editorial coverage regarding movie customization," losses which are due to the Defendants' actions, are estimated to exceed tens of millions of dollars.

COUNT I – PATENT INFRINGEMENT
(AGAINST CLEARPLAY)

34. Nissim repeats and realleges each and all of the allegations contained in paragraphs 1 through 33 above as though fully set forth herein.

35. Part of the portfolio of Nissim Patents, United States Patent 6,067,401 ("the '401 patent"), entitled "Playing A Version Of And From Within A Video By Means Of Downloaded Segment Information," was duly and lawfully issued on May 23, 2000 by the United States Patent and Trademark Office. The '401 patent issued from an application filed with the United States Patent and Trademark Office on December 11, 1997, claims priority from a parent application which was originally filed on January 11, 1993 and which issued as United States Patent 5,434,678, and which is now, and has been at all times since its date of issue, valid and enforceable. A true and correct copy of the '401 patent is attached hereto as Exhibit A.

36. ClearPlay offers to sell, within the United States, the RCA Model DRC232N DVD player; and makes, uses, offers to sell and/or sells ClearPlay Filters, and related technologies that directly infringe, literally or under the doctrine of equivalents, and/or indirectly infringe, at least claims 1, 6, 11 and 16 of the '401 patent.

37. ClearPlay's acts of infringement have been willful and with full knowledge and in conscious disregard of Nissim's rights under the '401 patent.

38. ClearPlay will continue to infringe in the future unless enjoined by the Court.

39. Nissim has been damaged by ClearPlay's infringement of the '401 patent in an amount to be proven at trial.

STROOCK & STROOCK & LAVAN LLP • MIAMI • NEW YORK • LOS ANGELES
WACHOVIA FINANCIAL CENTER, 200 SOUTH BISCAYNE BLVD., SUITE 3160 MIAMI, FL 33131-5323
TEL 305.358.9900 FAX 305.789.9302 WWW.STROOCK.COM

COUNT II – PATENT INFRINGEMENT
(AGAINST CLEARPLAY)

40. Nissim repeats and realleges each and all of the allegations contained in paragraphs 1 through 33 above as though fully set forth herein.

41. Part of the portfolio of Nissim Patents, United States Patent 5,724,472 ("the '472 patent"), entitled "Content Map For Seamlessly Skipping A Retrieval Of A Segment Of A Video," was duly and lawfully issued on March 3, 1998 by the United States Patent and Trademark Office. The '472 patent issued from an application filed with the United States Patent and Trademark Office on May 1, 1995, claims priority from a parent application which was originally filed on February 7, 1992 and which issued as United States Patent 6,208,805, and which is now, and has been at all times since its date of issue, valid and enforceable. A true and correct copy of the '472 patent is attached hereto as Exhibit B.

42. ClearPlay offers to sell, within the United States, the RCA Model DRC232N DVD player; and makes, uses, offers to sell and/or sells ClearPlay Filters, and related technologies that directly infringe, literally or under the doctrine of equivalents, and/or indirectly infringe, at least claims 1, 3, and 5 of the '472 patent.

43. ClearPlay's acts of infringement have been willful and with full knowledge and in conscious disregard of Nissim's rights under the '472 patent.

44. ClearPlay will continue to infringe in the future unless enjoined by the Court.

45. Nissim has been damaged by ClearPlay's infringement of the '472 patent in an amount to be proven at trial.

STROOCK & STROOCK & LAVAN LLP • MIAMI • NEW YORK • LOS ANGELES
WACHOVIA FINANCIAL CENTER, 200 SOUTH BISCAYNE BLVD., SUITE 3160 MIAMI, FL 33131-5323
TEL 305.358.9900 FAX 305.789.9302 WWW.STROOCK.COM

COUNT III – PATENT INFRINGEMENT
(AGAINST CLEARPLAY)

46. Nissim repeats and realleges each and all of the allegations contained in paragraphs 1 through 33 above as though fully set forth herein.

47. Part of the portfolio of Nissim Patents, United States Patent 5,434,678 ("the '678 patent"), entitled "Seamless Transmission Of Non-Sequential Video Segments," was duly and lawfully issued on July 18, 1995 by the United States Patent and Trademark Office. The '678 patent issued from an application filed with the United States Patent and Trademark Office on January 11, 1993, and is now, and has been at all times since its date of issue, valid and enforceable. A true and correct copy of the '678 patent is attached hereto as Exhibit C.

48. ClearPlay offers to sell, within the United States, the RCA Model DRC232N DVD player; and makes, uses, offers to sell and/or sells ClearPlay Filters, and related technologies that directly infringe, literally or under the doctrine of equivalents, and/or indirectly infringe, at least claims 1, 4, 8, 9, 13, 14, 16 and 18 of the '678 patent.

49. ClearPlay's acts of infringement have been willful and with full knowledge and in conscious disregard of Nissim's rights under the '678 patent.

50. ClearPlay will continue to infringe in the future unless enjoined by the Court.

51. Nissim has been damaged by ClearPlay's infringement of the '678 patent in an amount to be proven at trial.

COUNT IV – PATENT INFRINGEMENT
(AGAINST CLEARPLAY)

52. Nissim repeats and realleges each and all of the allegations contained in paragraphs 1 through 33 above as though fully set forth herein.

STROOCK & STROOCK & LAVAN LLP • MIAMI • NEW YORK • LOS ANGELES
WACHOVIA FINANCIAL CENTER, 200 SOUTH BISCAYNE BLVD., SUITE 3160 MIAMI, FL 33131-5323
TEL 305.358.9900 FAX 305.789.9302 WWW.STROOCK.COM

53. Part of the portfolio of Nissim Patents, United States Patent 5,589,945 ("the '945 patent"), entitled "Computer-Themed Playing System," was duly and lawfully issued on December 31, 1996 by the United States Patent and Trademark Office. The '945 patent issued from an application filed with the United States Patent and Trademark Office on September 13, 1994, which claims priority from a parent application originally filed on January 11, 1993 and which issued as United States Patent 5,434,678, and which is now, and has been at all times since its date of issue, valid and enforceable. A true and correct copy of the '945 patent is attached hereto as Exhibit D.

54. ClearPlay offers to sell, within the United States, the RCA Model DRC232N DVD player; and makes, uses, offers to sell and/or sells ClearPlay Filters, and related technologies that directly infringe, literally or under the doctrine of equivalents, and/or indirectly infringe, at least claims 5, 6, 8, 9 and 11 of the '945 patent.

55. ClearPlay's acts of infringement have been willful and with full knowledge and in conscious disregard of Nissim's rights under the '945 patent.

56. ClearPlay will continue to infringe in the future unless enjoined by the Court.

57. Nissim has been damaged by ClearPlay's infringement of the '945 patent in an amount to be proven at trial.

COUNT V – MISAPPROPRIATION OF TRADE SECRETS (AGAINST ALL DEFENDANTS)

58. Nissim repeats and realleges each and all of the allegations contained in paragraphs 1 through 33 above as though fully set forth herein.

59. Nissim's Confidential CustomPlay Information constitutes valuable trade secrets, has independent economic value, and was not known to ClearPlay, or Matthew or Lee Jarman,

STROOCK & STROOCK & LAVAN LLP • MIAMI • NEW YORK • LOS ANGELES
WACHOVIA FINANCIAL CENTER, 200 SOUTH BISCAYNE BLVD., SUITE 3160 MIAMI, FL 33131-5323
TEL 305.358.9900 FAX 305.789.9302 WWW.STROOCK.COM

prior to its disclosure by Nissim or otherwise generally known or readily ascertainable to the public.

60. Nissim took reasonable steps to ensure the secrecy of the Confidential CustomPlay Information and disclosed the information only under conditions of confidentiality and prohibitions on its use, including a written Bilateral Confidentiality Agreement between Nissim and Matthew and Lee Jarman, a true and correct copy of which is attached hereto as Exhibit E.

61. Matthew and Lee Jarman, with full knowledge that they had obtained Nissim's Confidential CustomPlay Information under obligations not to use or disclose the information without Nissim's consent, intentionally misappropriated Nissim's trade secrets through improper means, in violation of Florida Statutes § 688.001 *et seq.*

62. ClearPlay, with full knowledge that its principals, Matthew and Lee Jarman, had obtained Nissim's Confidential CustomPlay Information under obligations not to use or disclose the information without Nissim's consent, intentionally misappropriated Nissim's trade secrets through improper means, in violation of Florida Statutes § 688.001 *et seq.*

63. ClearPlay and Matthew and Lee Jarman have been unjustly enriched, and Nissim has been damaged and irreparably harmed, due to ClearPlay's and Matthew and Lee Jarman's misappropriation of Nissim's trade secrets.

COUNT VI – BREACH OF CONTRACT
(AGAINST MATTHEW AND LEE JARMAN)

64. Nissim repeats and realleges each and all of the allegations contained in paragraphs 1 through 33 above as though fully set forth herein.

65. There existed a valid Bilateral Confidentiality Agreement governed by Florida law between Nissim and Matthew and Lee Jarman, a true and correct copy of which is attached hereto as Exhibit E.

66. Matthew and Lee Jarman breached the Bilateral Confidentiality Agreement by using and disclosing information furnished by Nissim that is protected by the confidentiality provisions of the agreement, and by failing to return to Nissim, upon demand, information that is protected by the agreement.

67. Nissim has been damaged and irreparably injured by breach of the agreement.

PRAYER FOR RELIEF

WHEREFORE, Plaintiff Nissim Corp. prays:

A. That the Court find ClearPlay liable for direct infringement of the '401, '472, '678 and '945 patents, either literally or under the doctrine of equivalents, and/or for indirect infringement.

B. That the Court find ClearPlay and Matthew and Lee Jarman liable for misappropriation of trade secrets.

C. That the Court find Matthew and Lee Jarman liable for breach of contract.

D. That ClearPlay, and all of its officers, directors, agents, servants, employees, successors, and assigns, and all persons acting in concert or in active participation with them, be preliminarily and permanently enjoined and restrained from making, using, importing, selling and/or offering to sell in the United States the ClearPlay RCA Player, or any other goods or services that infringe the '401 patent, the '472 patent, the '678 patent and/or the '945 patent, and/or which utilize Nissim's Confidential CustomPlay Information; that ClearPlay be ordered to

STROOCK & STROOCK & LAVAN LLP • MIAMI • NEW YORK • LOS ANGELES
WACHOVIA FINANCIAL CENTER, 200 SOUTH BISCAYNE BLVD., SUITE 3160 MIAMI, FL 33131-5323
TEL 305.358.9900 FAX 305.789.9302 WWW.STROOCK.COM

deliver up for destruction all ClearPlay RCA Players and any other goods that infringe the '401 patent, the '472 patent, the '678 patent and/or the '945 patent, and/or which utilize Nissim's Confidential CustomPlay Information; and that ClearPlay be directed to file with this Court and serve upon Plaintiff a written report under oath setting forth in detail the manner in which ClearPlay has complied with the injunction.

E. That the Court award Nissim compensatory damages due to ClearPlay's infringement of the '401 patent, the '472 patent, the '678 patent and/or the '945 patent that the Court find this case exceptional within the meaning of 35 U.S.C. § 285 based on the willful nature of ClearPlay's infringement, and that the Court enter judgment three (3) times such compensatory amounts pursuant to 35 U.S.C. § 284.

F. That the Court award Nissim compensatory damages due to ClearPlay's and Matthew and Lee Jarman's misappropriation of trade secrets and that the Court exercise its discretion under Florida Statutes § 688.004 and award enhanced damages two (2) times such compensatory amount.

G. That the Court award Nissim its damages due to Matthew and Lee Jarman's breach of the Bilateral Confidentiality Agreement and/or that the Court enter an order of specific performance against Matthew and Lee Jarman.

H. That the Court award Nissim its reasonable attorneys' fees incurred in this action pursuant to 35 U.S.C. § 285 and Florida Statutes § 688.005.

I. That the Court award Nissim its taxable costs, disbursements, and pre-judgment and post-judgment interest.

J. For such other and further relief as the Court deems just and proper.

STROOCK & STROOCK & LAVAN LLP • MIAMI • NEW YORK • LOS ANGELES
WACHOVIA FINANCIAL CENTER, 200 SOUTH BISCAYNE BLVD., SUITE 3160 MIAMI, FL 33131-5323
TEL 305.358.9900 FAX 305.789.9302 WWW.STROOCK.COM

JURY DEMAND

Plaintiff Nissim Corp. demands trial by jury on all issues so triable.

Dated: May 13, 2004

Respectfully submitted,

John C. Carey
Florida Bar No. 0078379
STROOCK & STROOCK & LAVAN LLP
3160 Wachovia Financial Center
200 South Biscayne Boulevard
Miami, Florida 33131
Telephone: (305) 789-9358
Facsimile: (305) 789-9302
jcarey@stroock.com (email)

Bruce S. Sperling
SPERLING & SLATER, P.C.
55 W. Monroe Street, Suite 3200
Chicago, Illinois 60603
Telephone: (312) 641-3200
Facsimile: (312) 641-6492
bss@sperling-law.com (email)

Joseph M. Vanek
DAAR & VANEK, P.C.
225 W. Washington St., 18th Floor
Chicago, Illinois 60606
Telephone: (312) 224-1500
Facsimile: (312) 224-1510
jvanek@daarvanek.com (email)

Counsel for Plaintiff Nissim Corp.

EXHIBIT A

US006067401A

United States Patent [19]

Abecassis

[11] Patent Number: 6,067,401

[45] Date of Patent: *May 23, 2000

[54] **PLAYING A VERSION OF AND FROM WITHIN A VIDEO BY MEANS OF DOWNLOADED SEGMENT INFORMATION**

[76] Inventor: **Max Abecassis,** 19020 NE. 20 Ave., Miami, Fla. 33179

[*] Notice: This patent is subject to a terminal disclaimer.

[21] Appl. No.: **08/988,943**

[22] Filed: **Dec. 11, 1997**

Related U.S. Application Data

[62] Division of application No. 08/954,535, Oct. 20, 1997, which is a continuation of application No. 08/419,822, Apr. 11, 1995, abandoned, which is a division of application No. 08/002,998, Jan. 11, 1993, Pat. No. 5,434,678.

[51] **Int. Cl.**[7] **H04N 5/781**; H04N 5/76

[52] **U.S. Cl.** **386/125**; 386/46

[58] **Field of Search** 386/46, 83, 124, 386/95, 92, 40, 1, 125; 348/7, 6, 12; 260/72; H04N 5/781, 5/85, 5/76

[56] **References Cited**

U.S. PATENT DOCUMENTS

4,305,131	12/1981	Best	364/521
4,449,198	5/1984	Uroon et al.	364/900
4,475,132	10/1984	Rodesch	358/342
4,520,404	5/1985	Von Kohorn	358/335
4,538,188	8/1985	Barker et al.	360/14.3
4,569,026	2/1986	Best	364/521
4,605,964	8/1986	Chard	358/147
4,685,003	8/1987	Westland	360/14.1
4,685,131	8/1987	Horne	380/20
4,729,044	3/1988	Kiesel	360/14.3
4,750,213	6/1988	Novak	455/67
4,754,342	6/1988	Duffy	360/14.3
4,766,541	8/1988	Bleich et al.	364/410
4,775,935	10/1988	Yourick	364/401
4,782,402	11/1988	Kanamaru	358/343
4,789,894	12/1988	Cooper	358/105
4,872,151	10/1989	Smith	369/14

(List continued on next page.)

OTHER PUBLICATIONS

Aguirre–Smith et. al. "Parsing Varies in context"Summer 1991, 157–167, MIT Media Lab.

Mackay et al. Virtual Video Editing in Interactive Multimedia Applications, Jul. '89, 802–810, Communications of ACM.

Sasnett, "Reconfigurable Video", Feb. '86, MIT.

Primary Examiner—Robert Chevalier

[57] **ABSTRACT**

A system comprising the means for, and a method of comprising the steps of, preestablishing a content preference with respect to a level of explicitness in each of plurality of content categories; downloading, by means of a communication, segment information for a video comprising a linear sequence of frames readable from a spiral track of an optical disc, the segment information directly defining at least one segment of the video with respect to a level of explicitness in at least one content category; selecting segments of the video by applying the preestablished content preference to the segment information; and playing, by means of a random accessing and buffering and from within the linear sequence of frames, a seamless version of the video less in length than the length of the video, the playing not requiring an alternate video source and comprising retrieving the selected segments and seamlessly skipping a retrieval of an at least one segment by buffering at least a portion of a segment.

20 Claims, 12 Drawing Sheets

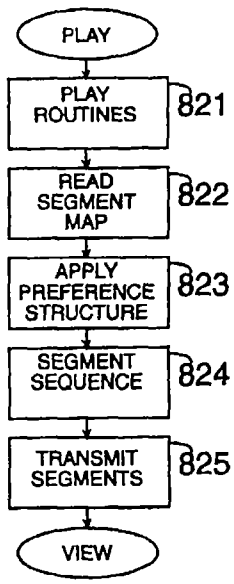

U.S. PATENT DOCUMENTS

4,888,796	12/1989	Olivo, Jr.	379/101
4,930,158	5/1990	Vogel	380/5
4,930,160	5/1990	Vogel	380/23
4,949,187	8/1990	Cohen	358/335
4,979,050	12/1990	Westland et al.	360/14.1
5,060,068	10/1991	Lindstrom	358/185
5,101,364	3/1992	Davenport et al.	395/152
5,107,343	4/1992	Uawai	358/341
5,109,482	4/1992	Bourman	395/154
5,122,886	6/1992	Tanaka	358/335
5,130,792	7/1992	Tindell et al.	358/85
5,172,111	12/1992	Olivo, Jr.	340/825.31
5,175,631	12/1992	Juri et al.	358/335
5,195,135	3/1993	Palmer	380/20
5,218,672	6/1993	Morgan et al.	395/162
5,253,275	10/1993	Yurt et al.	375/122
5,267,351	11/1993	Reber et al.	395/600
5,274,463	12/1993	Matsumoto et al.	358/335
5,280,462	1/1994	Yokogawa	369/30
5,313,297	5/1994	Fukui et al.	348/7
5,367,510	11/1994	Ando	369/321
5,434,678	7/1995	Abecassis	386/83
5,521,900	5/1996	Ando et al.	369/275.1
5,546,365	8/1996	Roth	369/32
5,574,567	11/1996	Cookson et al.	386/46

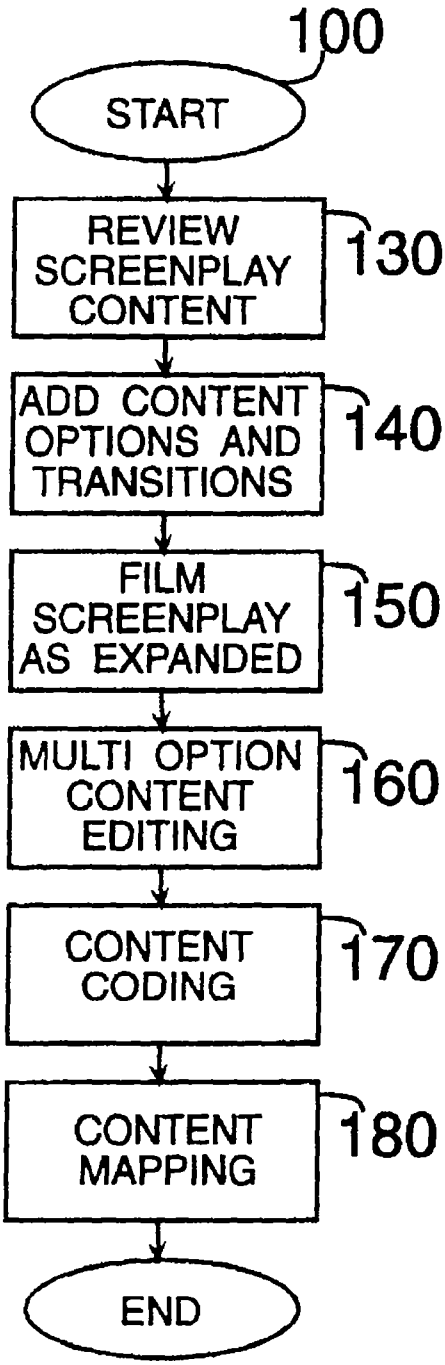
100
START
REVIEW SCREENPLAY CONTENT
130
ADD CONTENT OPTIONS AND TRANSITIONS
140
FILM SCREENPLAY AS EXPANDED
150
MULTI OPTION CONTENT EDITING
160
CONTENT CODING
170
CONTENT MAPPING
180
END

FIG. 1

210

Code	Description	None	Implied	Explicit	Graphic
110	Profanity	1	2	3	4
130	Violence	1	2	3	4
135	Bloodshed	1	2	3	4
150	Monsters	1	2	3	4
170	Nudity	1	2	3	4
175	Sex	1	2	3	4

211 212 219

FIG. 2A

220

Code	Description	None	Minimal	Expanded	Extensive
210	Character	1	2	3	4
220	Location	1	2	3	4
230	Time	1	2	3	4
340	Detail	1	2	3	4
420	Expertise	1	2	3	4

221 222

FIG. 2B

230

Code	Description	Highlight	Summary	Condensed	Detailed
610	Inclusion	1	2	3	4

231

FIG. 2C

240

G	PG	PG-13	R	NC-17

241 249

FIG. 2D

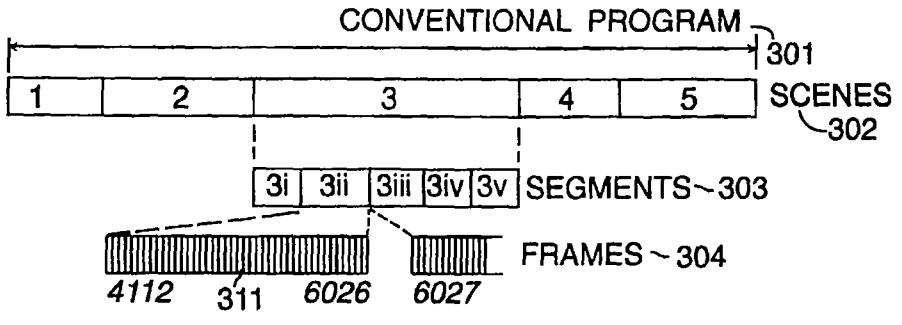

Code	Description	None	Implied	Explicit	Graphic
135	Bloodshed			3	

319

FIG. 3A

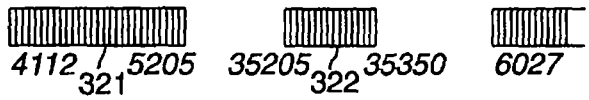

Code	Description	None	Implied	Explicit	Graphic
135	Bloodshed	1			

329

FIG. 3B

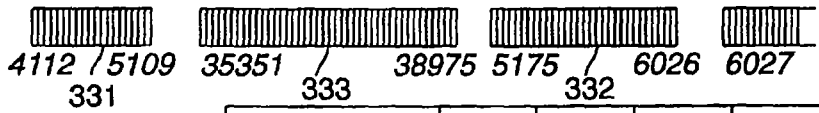

Code	Description	None	Implied	Explicit	Graphic
135	Bloodshed				4

339

FIG. 3C

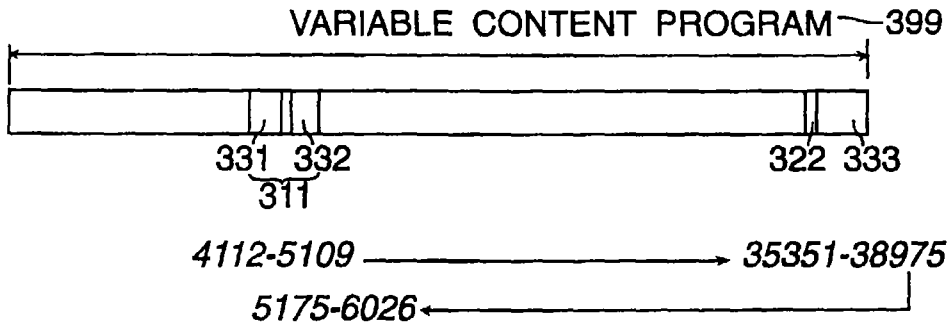
VARIABLE CONTENT PROGRAM
399
331
332
311
322
333
4112-5109
35351-38975
5175-6026

FIG. 3D

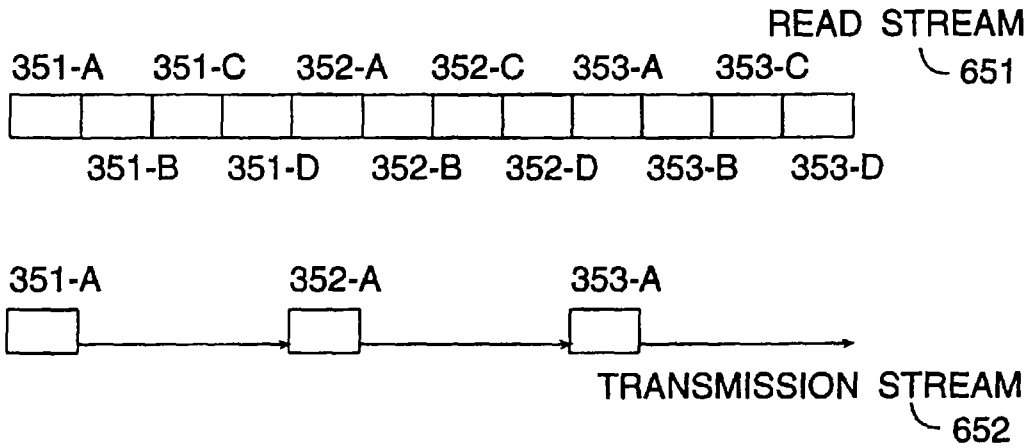
READ STREAM
651
351-A
351-C
352-A
352-C
353-A
353-C
351-B
351-D
352-B
352-D
353-B
353-D
351-A
352-A
353-A
TRANSMISSION STREAM
652

FIG. 3E

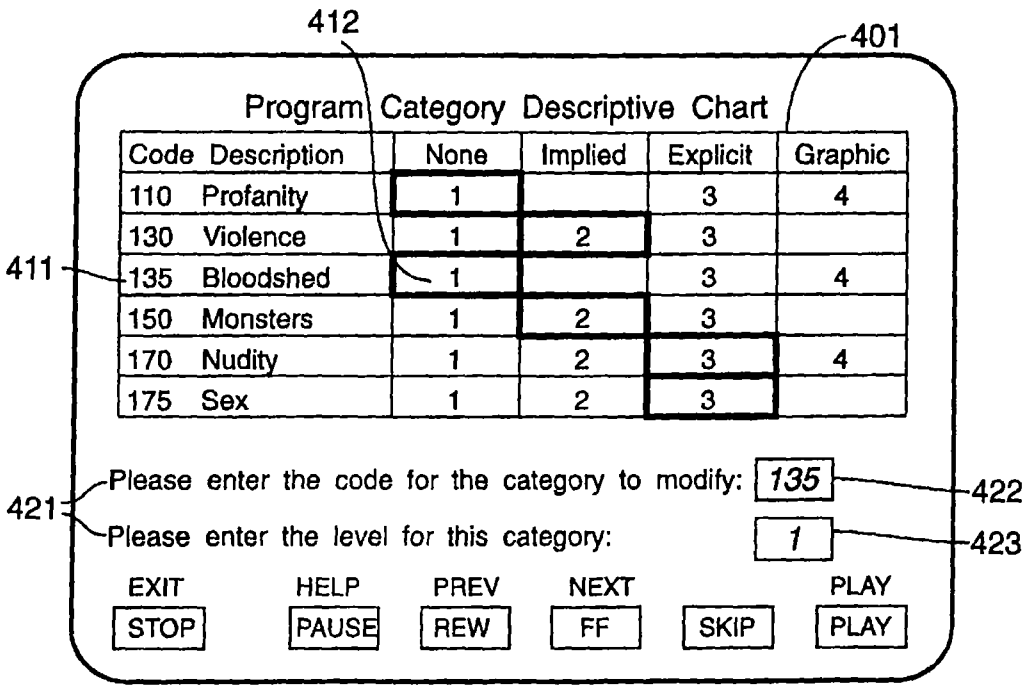
412
401
Program Category Descriptive Chart
Code Description
None
Implied
Explicit
Graphic
110 Profanity 1 3 4
130 Violence 1 2 3
411
135 Bloodshed 1 3 4
150 Monsters 1 2 3
170 Nudity 1 2 3 4
175 Sex 1 2 3
421
Please enter the code for the category to modify: 135
422
Please enter the level for this category: 1
423
EXIT STOP
HELP PAUSE
PREV REW
NEXT FF
SKIP
PLAY PLAY

FIG. 4

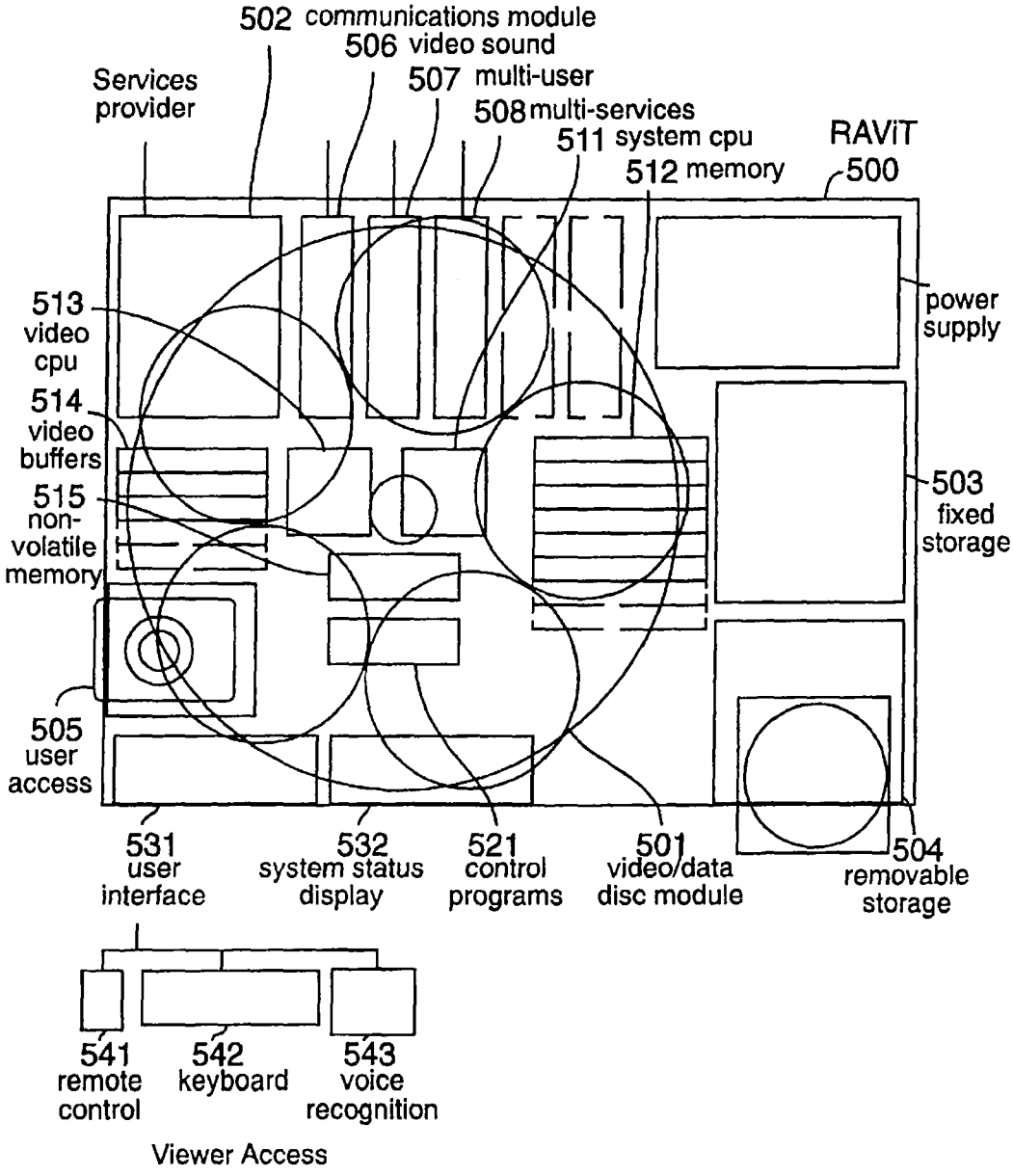
502 communications module
506 video sound
507 multi-user
508 multi-services
511 system cpu
512 memory
Services provider
RAViT
500
power supply
513 video cpu
514 video buffers
515 non-volatile memory
503 fixed storage
505 user access
531 user interface
532 system status display
521 control programs
501 video/data disc module
504 removable storage
541 remote control
542 keyboard
543 voice recognition
Viewer Access

FIG. 5

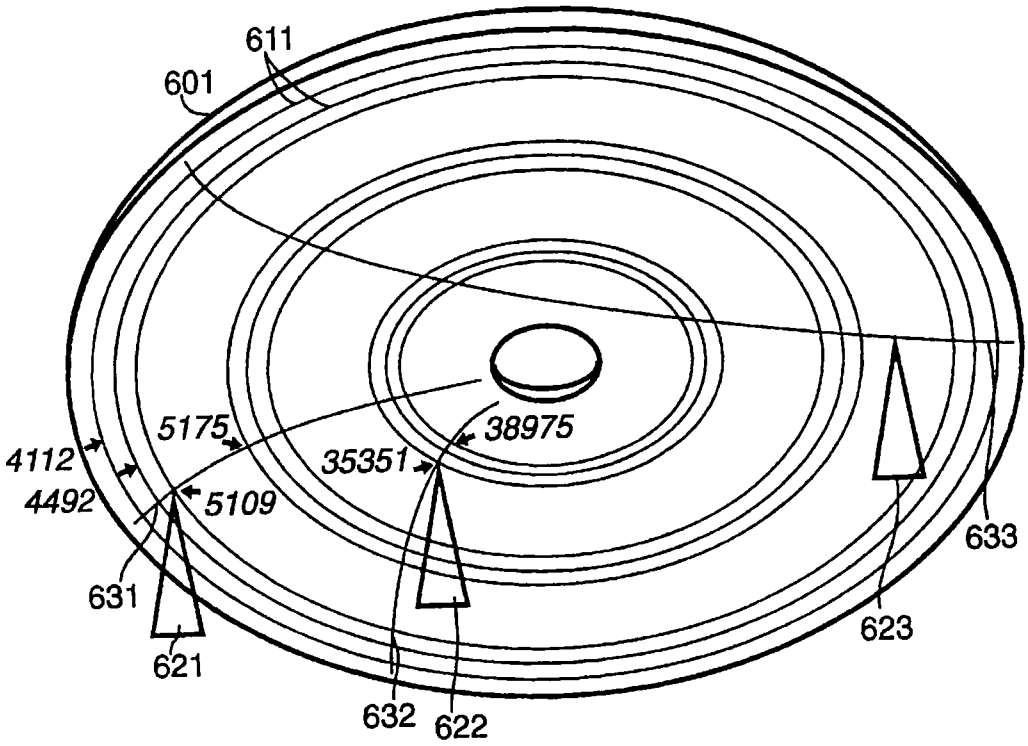
611
601
5175
38975
4112
35351
4492
5109
631
633
623
621
632
622
642
30 FRAMES PER SECOND
641
60 FRAMES PER SECOND
643
120 FRAMES PER SECOND

FIG. 6

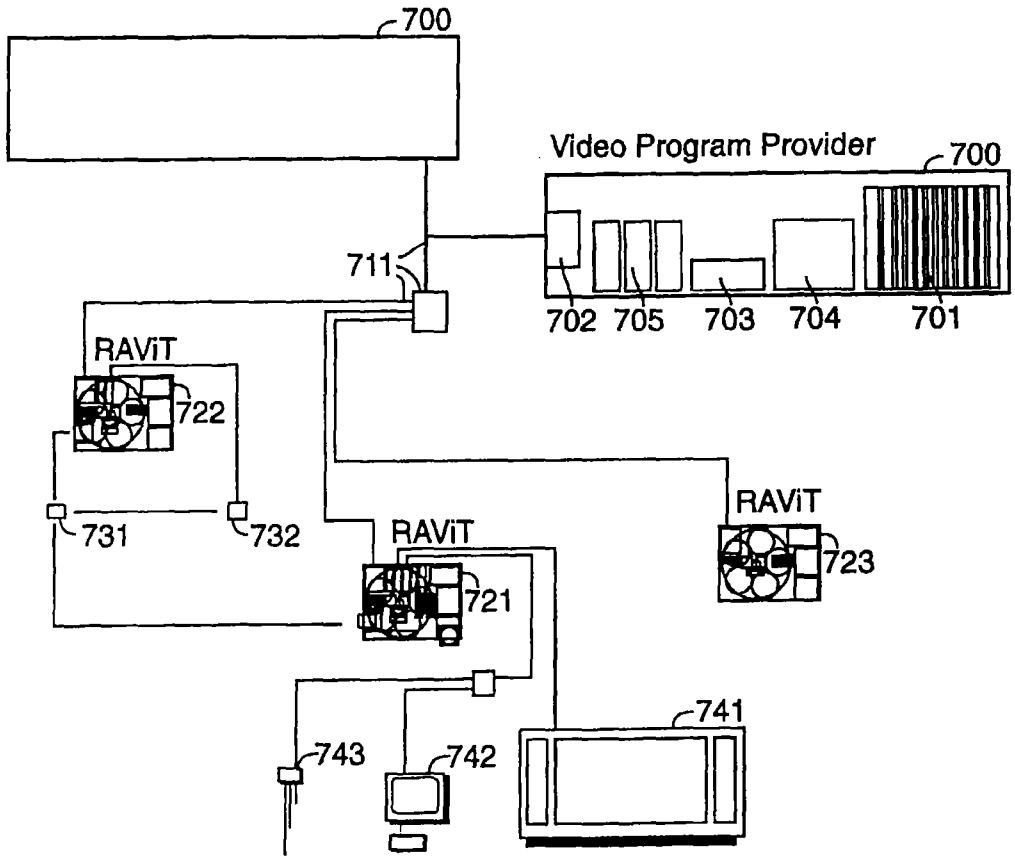
700
Video Program Provider
700
711
702
705
703
704
701
RAViT
722
731
732
RAViT
721
RAViT
723
741
743
742

FIG. 7

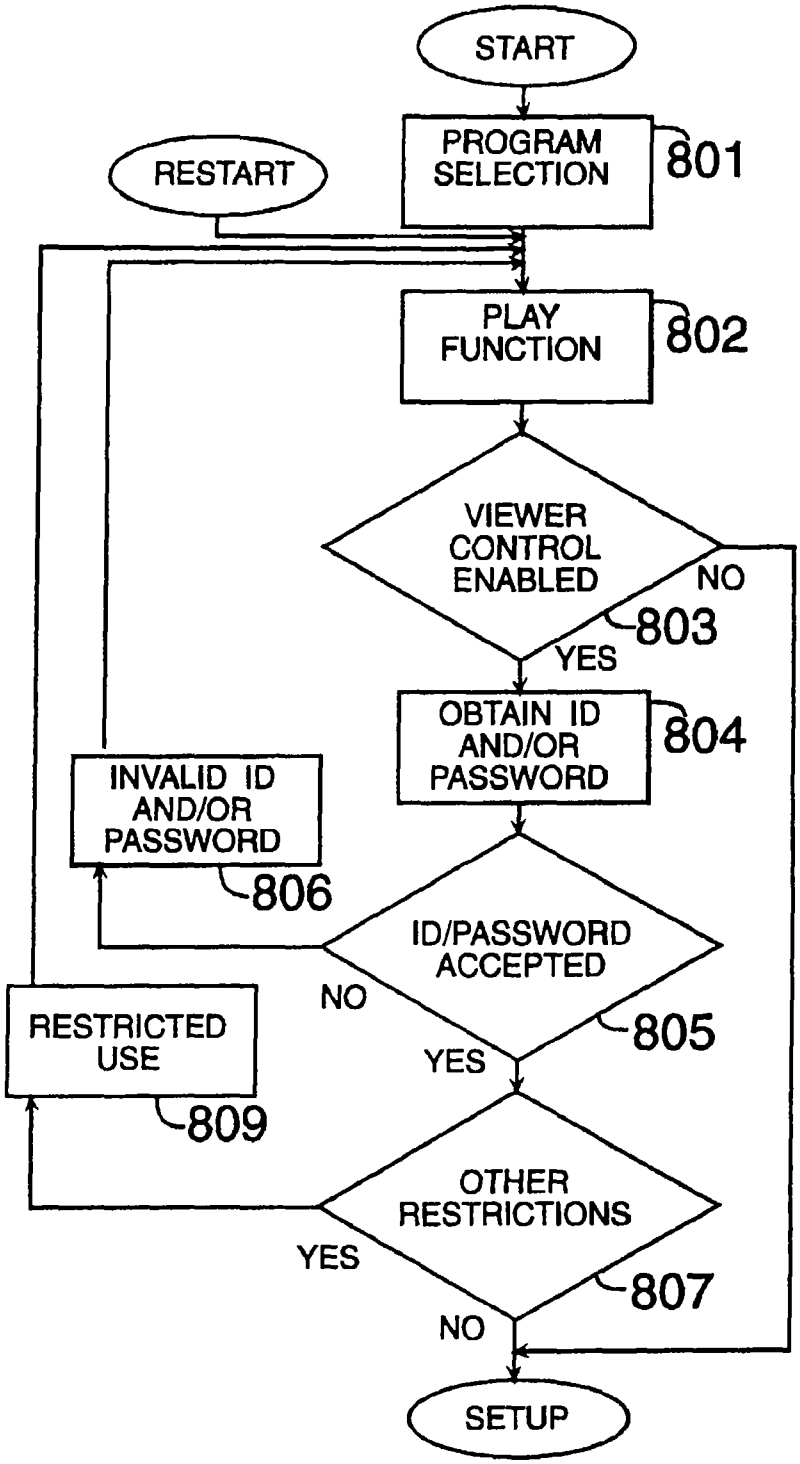
START
PROGRAM SELECTION
801
RESTART
PLAY FUNCTION
802
VIEWER CONTROL ENABLED
NO
803
YES
OBTAIN ID AND/OR PASSWORD
804
INVALID ID AND/OR PASSWORD
806
ID/PASSWORD ACCEPTED
NO
805
YES
RESTRICTED USE
809
OTHER RESTRICTIONS
YES
807
NO
SETUP

FIG. 8A

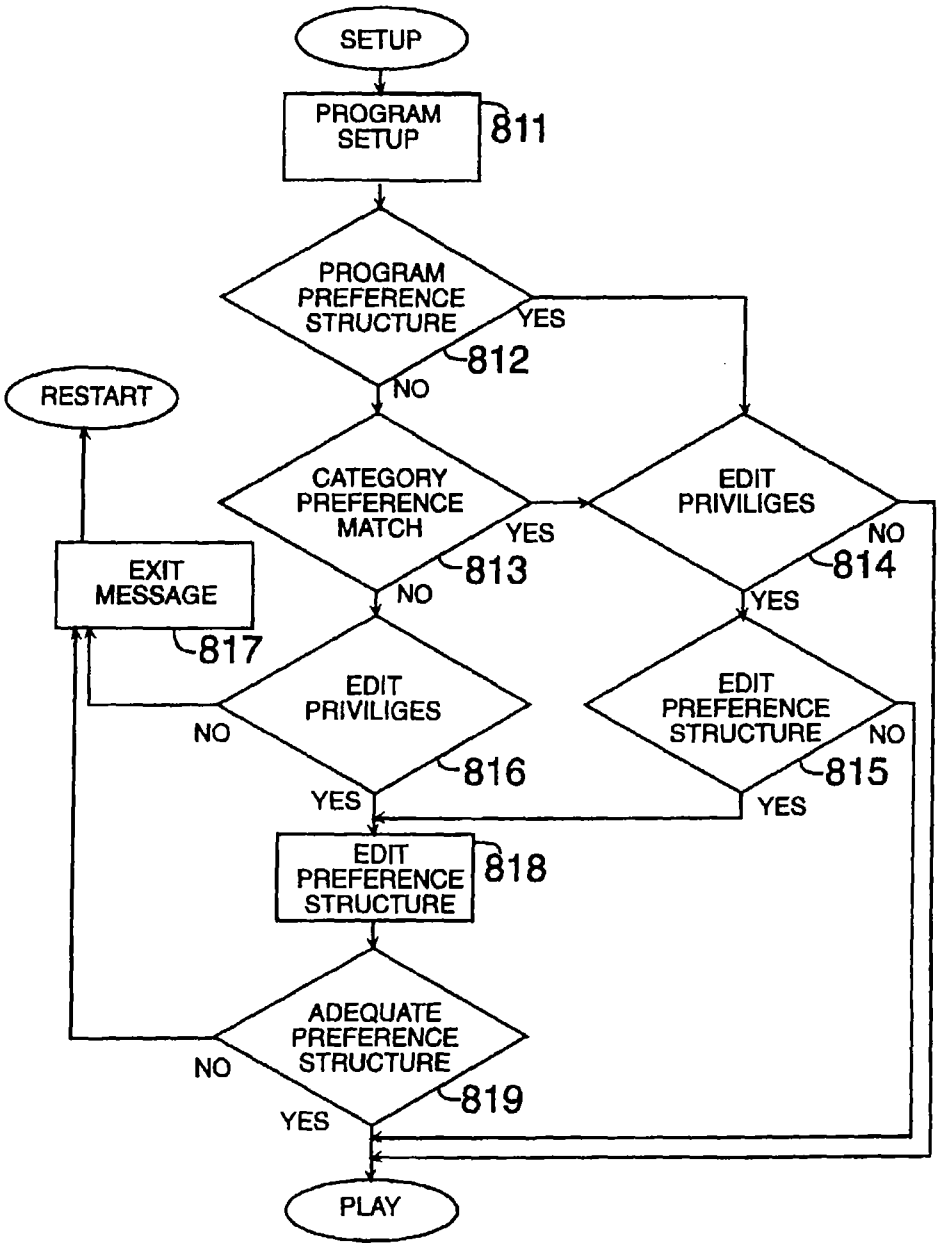
SETUP
PROGRAM SETUP
811
PROGRAM PREFERENCE STRUCTURE
YES
812
NO
RESTART
CATEGORY PREFERENCE MATCH
YES
813
NO
EDIT PRIVILIGES
NO
814
YES
EXIT MESSAGE
817
EDIT PRIVILIGES
NO
816
YES
EDIT PREFERENCE STRUCTURE
NO
815
YES
EDIT PREFERENCE STRUCTURE
818
ADEQUATE PREFERENCE STRUCTURE
NO
819
YES
PLAY

FIG. 8B

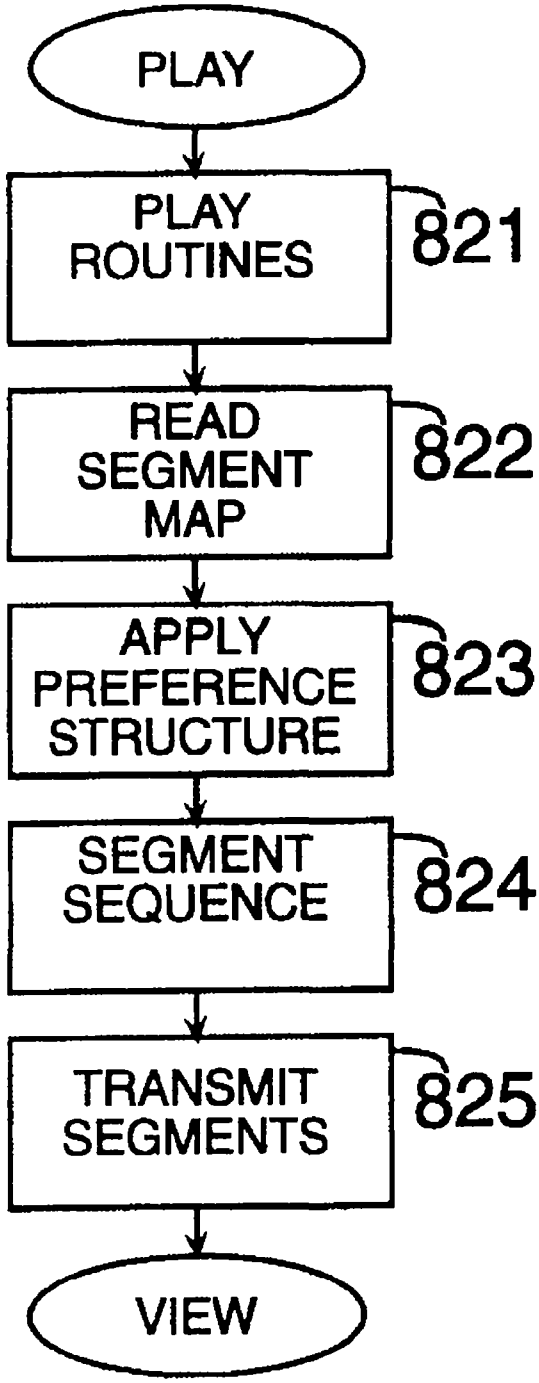
PLAY
PLAY ROUTINES
821
READ SEGMENT MAP
822
APPLY PREFERENCE STRUCTURE
823
SEGMENT SEQUENCE
824
TRANSMIT SEGMENTS
825
VIEW

FIG. 8C

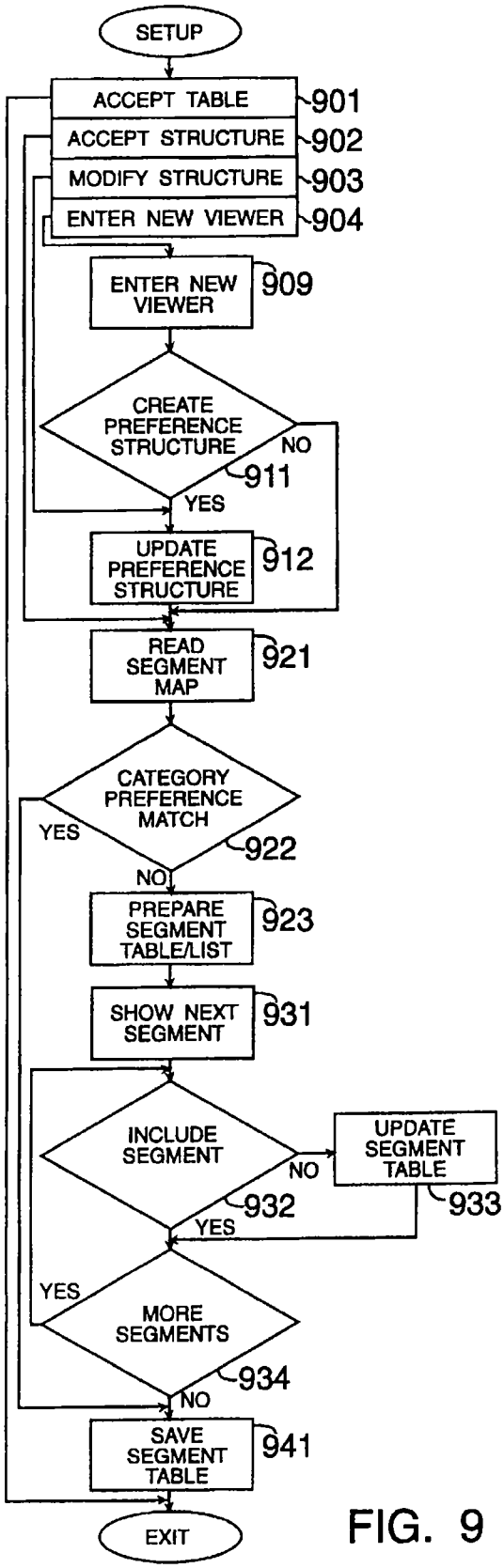
SETUP
ACCEPT TABLE
901
ACCEPT STRUCTURE
902
MODIFY STRUCTURE
903
ENTER NEW VIEWER
904
ENTER NEW VIEWER
909
CREATE PREFERENCE STRUCTURE
NO
911
YES
UPDATE PREFERENCE STRUCTURE
912
READ SEGMENT MAP
921
CATEGORY PREFERENCE MATCH
YES
922
NO
PREPARE SEGMENT TABLE/LIST
923
SHOW NEXT SEGMENT
931
INCLUDE SEGMENT
NO
UPDATE SEGMENT TABLE
933
932
YES
YES
MORE SEGMENTS
934
NO
SAVE SEGMENT TABLE
941
EXIT

FIG. 9

PLAYING A VERSION OF AND FROM WITHIN A VIDEO BY MEANS OF DOWNLOADED SEGMENT INFORMATION

This application is a division of patent application Ser. No. 08/954,535, filed Oct. 20, 1997, which is a continuation of Ser. No. 08/419,822, filed Apr. 11, 1995 now abandoned and, which is a division of Ser. No. 08/002,998, filed Jan. 11, 1993, now U.S. Pat. No. 5,434,678 issued Jul. 18, 1995.

BACKGROUND OF THE INVENTION

1. Field of the Invention

The invention relates to a video device for the automated selective retrieval of non-sequentially-stored video segments of a video program, from a single video program source, responsive to a viewer's preestablished video content preferences, and the transmission of the selected segments as a seamless video program.

2. Description of the Prior Art

Conventional memory storage devices, as for example, laser disc players and computer hard disks, when accessing or transferring data randomly located on the device's memory storage unit, the read/write functions of the device must wait for the proper positioning of the read/write head from one location to another location. This operation usually referred to as the average access time and measured in microseconds is one of the primary determinants of a random access device's performance capabilities.

In full motion picture applications a device's capabilities are also critical in terms of transfer rates and storage capacity. A typical motion picture runs at 30 frames per second. In digital terms, reasonable quality video, such as may be obtained from a VCR tape, requires approximately 1.5 megabytes per second, or a total of 10,800 megabytes for a two hour film. While the application of compression technologies reduces the storage requirements, this is offset by the greater requirements of high definition television (HDTV).

As a result of the storage capacity, transfer rates, and average access times, laser optical technology has proven its costs effectiveness in full motion picture applications. State of the art laser video disc systems, such as for example Pioneer's VDR-V1000, incorporates separate optical heads for recording and erasing, and provides an average access time of 0.3 seconds. While in most applications a 0.3 seconds average access time can be accommodated, this proves not be the case when a continuous seamless retrieval of random frame sequences from a single video source is required. A 0.3 average access time translates into a gap of 0.3 seconds (approximately 9 frames) each time a non-sequential frame needs to be retrieved. Where the viewing of a motion picture requires a significant number of such random accesses, the repeated gaps represent a significant failing.

Various data and video read and read/write architectures, such as those comprising: i) a single head; ii) multiple heads, in which each head operates on a different source surface; iii) multiple heads operating in one surface, in which each set of heads moves over the surface as a single unit; and iv) multiple heads, in which each head's movement over the shared surface and function is independent of the operation of the other heads; provide different average access time and transfer rate capabilities.

For example, the patent to Takemura et al., U.S. Pat. No. 4,744,070, discloses a tracking method for an optical disc in which two laser spots irradiate two adjoining slants of a V-shape groove. Since the laser spots movement over the disc surface are in unison, the shortcomings of access time gaps are not resolved.

With respect to the objects of the present invention, the shortcomings of the prior art known to the applicant are not limited to the hardware architecture. From the outset, film production has and continues to be directed at the eventual production of a unique linear sequence of frames.

In the creation of motion picture, producers and artists often surrender the exercise of creative expression to the inherent constraints of an unique linear sequence of frames, generally accepted norms, marketing objectives, and the censoring influence of the Motion Picture Association of America, Inc. rating system. In general, the resulting compromise inevitably provides for scenes, content, or artistic expression, which either exceeds or fails to satisfy individual viewer preferences. Too often, gains made in the exercise of creative expression result in the loss of potential audience. To that extent, recently a number of films are issued in an U.S. version, and a more explicit European version.

Viewers that are attracted by the general subject matter of a motion picture, and, on the basis of the MPAA's motion picture rating system, elect to view the motion picture are subjected to material in the program they would not have selected for their own viewing. In a 1989 poll conducted by the Associated Press, 82% of the respondents felt that movies contained too much violence, 80% found too much profanity, and 72% complained of too much nudity.

A number of editing systems in the prior art have attempted to address these issues. For example, the patent to Von Kohorn, U.S. Pat. No. 4,520,404, discloses a remote recording and editing system, whose functions include the activation or deactivation of a television receiver and a recording apparatus by the transmission of control or editing command signals, generated from a central station where an operator monitors a broadcast transmission. Similarly, the patent to Chard, U.S. Pat. No. 4,605,964, discloses a television controller that utilizes coding for identifying and automatically deleting undesirable sound and visual events broadcast with a program. The patent to Olivo, Jr., U.S. Pat. No. 4,888,796, discloses a screening device capable of automatically disabling the TV or video receiving device in response to the receiver's recognition of a non-interfering material content signal co-transmitted with the program signals. However, even the aggregation of Von Kohorn, Chard, and Olivo, fails to suggest a video software/hardware architecture wherein the disabling of segments of the program material does not produce dead segments.

The patent to Vogel, U.S. Pat. No. 4,930,160, addresses the resulting dead segments in the transmission by providing a facility for displaying alternative material during the dead segments. The alternative material selected during censorship periods can originate from a remote source, for example, another television broadcast, or locally, for example, from a video disc or tape player. However, Vogel and the prior art known to the applicant, do not provide a system that creates, from a single source, an automatically edited, seamlessly continuous program in which edited out segments are replaced with other parts of the same program responsive to a viewer's preestablished video content preferences.

The patent to Bohrman, U.S. Pat. No. 5,109,482, discloses and is titled "Interactive Video Control System for Displaying User-Selectable Clips". In Bohrman, it is the viewer that,

with precise knowledge of the contents of the video segments of a program, interactively creates an arrangement of the viewer selected segments. In other words the segments are not automatically selected and arranged responsive to a viewer's preestablished content preferences. Additionally, Bohrman fails to address the problems associated with the laser disc player's average access times.

A number of other interactive systems in the prior art provide viewers the means to participate, and thereby affect, the program's story lines or plot. The patent to Best, U.S. Pat. No. 4,569,026, discloses a video entertainment system where human viewers conduct simulated voice conversations with screen actors or cartoon characters in a branching story game shown on a television screen. As opposed to passive systems, the essence of interactive video systems is a viewer's participation. In interactive systems, at frequent points, the system's continued operation is dependent on the viewer's response.

In electronic games, of which Sega's CD ROM System for Genesis is an example, the access time of approximately one second results in noticeable pauses in the action, the effect of which is also mitigated by the interactive nature of the software. As a result of their interactivity, these systems can accept significantly slow random access times.

Further, as electronic games have been principally directed at children, or contain primitive subject matter, they have not dealt with issues raised by the more complex adult fortes of expression inherent in contemporary motion picture films. While electronic games provide setup editing capabilities (selection of: level of difficulty, character, weapons, etc.), they do not provide censoring editing capabilities. This is clearly evidenced in the discussion, marketing, and development of video games dealing with material generally deemed not suitable for children. Given the random access capability of CD-based systems, it is surprising that when dealing with adult subject matter, the inherent limitations of conventional films and the MPAA's rating system have been adopted by forthcoming CD based video games.

Thus the prior art known to the applicant has failed to show an integrated software and hardware architecture that provides for the automated selective retrieval of non-sequentially stored video segments of a program, from a single program source, responsive to a viewer's preestablished viewing preferences, and the transmission of the selected segments as a seamless video program.

SUMMARY OF THE INVENTION

These and other shortcomings of the prior art are overcome by the various features of the present invention which are directed to a seamless transmission of non-sequential video segments. For purposes of the present invention, various terms or nomenclature used in the art are defined as follows:

The term "viewer" as used herein is meant to include and be interchangeable with the words "player"(when referring to a person), subscriber, and "user". That is, the term "viewer" ought to be understood in the general sense of a person passively viewing a video, interactively playing a video game, retrieving video from a video provider, and/or actively using multi-media.

The terms "video" and "video program" are interchangeable and refer to any video image regardless of the source, motion, or technology implemented. A "video" comprises images found in full motion picture programs and films, in interactive electronic games, and in video produced by multi-media systems. Unless otherwise qualified to mean a computer software program, the term "program" is interchangeable and may be replaced with the word "video". While a particular feature may be detailed with respect to a specified viewing, gaming, or computing application, it is intended herein to apply the teachings of the present invention broadly and harmoniously across the different classes of applications that generate a video output.

The terms "variable content program" and "variable content game" refer to a specific video program characterized by a greater variety of possible logical content sequences that result from the additional segments provided for that purpose. The term "content" referring principally to the form of expression rather than the story-line. Where initially produced as a variable content program, the video utilizes parallel, transitional, and overlapping segments to provide viewing of a program's story-line/interactive action at different levels of forms of expression.

The term "video content preferences" refers to a viewer's preferences as to the "content" of a video. "Video content preferences", specifically and principally, although not exclusively, refers to a viewer's preestablished and clearly defined preferences as to the manner or form (e.g. explicitness) in which a story/game is presented, and the absence of undesirable matter (e.g. profanity) in the story/game. In the broadest sense the term "video content preferences" further includes "video programming preferences", which refers exclusively to a viewer's preferences as to specific programs/games (e.g Sega's "Sherlock Holmes Consulting Detective"), types of programs/games (e.g. interactive video detective games), or broad subject matter (e.g. mysteries). In contrast to the prior art "video-on-demand" systems which are responsive to a viewer's "video programming preferences"; a more inclusive "content-on-demand" system as per the teachings of the present invention is responsive to a viewer's "video content preferences".

The term "seamless" is intended in the sense that the transmission of sequential and non-sequential frames is undiscernible to the eye, and not in the sense of the natural video seams that result in the intended changes from one scene lo another, from one camera angle to the other, or from one gaming sequence to the other. In a seamless transmission of a variable content motion picture a constant video frame transmission rate is maintained, whether the frames are sequential or non-sequential.

The terms "B-ISDN", specifically referring to a broadband integrated services digital network, and "fiber optic", specifically referring to a network comprising fiber optic cable, refer to any "communications" means, private or public, capable of transmitting video from a remote video source to a viewer. In the broadest sense these terms further comprise satellite communications.

Where not clearly and unambiguously inconsistent with the context, these and other terms defined herein are to be understood in the broadest possible sense that is consistent with the definitions.

Accordingly, in view of the shortcomings of the prior art, it is an object of the present invention to provide a device comprising integrated random access video technologies and video software architectures that furnishes a viewer the automated selective retrieval of non-sequentially stored, parallel, transitional, and overlapping video segments from a single variable content program source, responsive to the viewer's preestablished video content preferences, and transmits the selected segments as a logical, seamless, and continuous video program.

It is another object of the invention to provide an interactive video game system comprising interactive video

game software, variable content game, and a program segment map defining segments of the variable content game, furnishing a player of the interactive video game the automatic and logical selection of video segments responsive to the application of the player's video content preferences to the program segment map, and responsive to the logic of the interactive video game software.

It is yet another object of the present invention to provide a device that furnishes a previewer of a variable content program the capability for efficiently previewing automatically selected segments from the program, responsive to a viewer's preestablished preferences, to permit the previewer to indicate the inclusion of the selected segments in the program to be viewed by the viewer.

It is yet another object of the present invention that a viewer's video content preferences be stored in a portable memory device.

It is yet another object of the present invention to integrate fiber optic communications capabilities and read/write laser disc player capabilities within a single device to facilitate the downloading of a motion picture program from a source remote to the device.

It is yet other objects of the present invention to provide a variety of reading architectures that produce a seamless reading of sequential and non-sequential segments of a variable content program from a single video source.

Briefly these and other objects of the invention are accomplished by means of the random access video technologies detailed herein in combination with the teachings herein of a variable content program.

Unlike traditional film media that permits a program format with only a single sequence of frames, random access video technologies make possible a variable content program format that is characterized by a variety of possible logical sequences of video frames. In a variable content program the artist and program producer are challenged to create greater variety in the form of expression, and utilize parallel, transitional, and overlapping segments to provide viewing of a program at that level of expression, content, detail, and length, that is consistent with a variety of viewer preferences.

In contrast to interactive motion pictures, and full motion video games, in a variable content program it is principally the form of expression that is the object of alternate frame sequences, rather than the story-line. In a variable content program, each of the significant scenes and actions can be implicitly expressed, as found for example in a "PG" rated film, explicitly expressed, as found for example in an "R" rated film, and graphically expressed, as found for example in an "NC-17" rated film. As a result, unlike motion pictures which are packaged as a single sequence of frames, the U.S. version, the European version, the edited-for-TV version, the "XXX" version, and the version addressing each viewer's particular tastes and preferences, reside harmoniously within a single variable content motion picture.

The present invention details a number of random access video technologies that permit the retrieval, in a logical order, of the non-sequential segments that comprise a variable content program without altering the transmission of the required frames per second. An embodiment of a video system as per the present invention, permits the automatic transmission of the selected segments from a variable content program as a seamless continuous and harmonious video program responsive to a viewer's preestablished video content preferences. In a second embodiment, segments from an interactive video game are selected responsive to the logic of the interactive video game software and the player's video content preferences.

In a laser disc video system, random access video technologies principally comprising: multiple independently simultaneously controlled reading units, video buffer, and media architecture, permit, in one embodiment, during the read operation of one of the reading units of the video information contained in a program source, the repositioning of a second one of the reading units to the next required non-sequential position in the program source. The resulting synchronization effectively eliminating the gaps that would result from a single reading unit's average access time. That is, pauses, gaps, dead frames, and fill-ins, are eliminated in the playing of non-sequential video segment stored in a single program source.

To achieve the automated selection of only those segments consistent with a viewer's preestablished viewing preferences, each program segment in a variable content program is defined by and is associated with a content descriptive structure that provides specific and detailed information as to each segment's subject matter, level of detail, and form of expression. The segments definitions of a program further comprises a first and last frame identifier, and beginning frame identifiers of the next logical segments. The segments definitions are organized into a program segment map.

A random access device as per the present invention provides each viewer the opportunity to preestablish both any number of generalized, personalized video content preferences, and program/event specific content preferences, identifying the viewing preferences in each of a number of content categories. By analyzing a viewer's preestablished video content preferences as they relate to a program's segment map, the random access device gains the information to automatically exclude segments of the variable content program containing material which the viewer does not wish to view, and to transmit as a logical seamless transparently harmonious and continuous program only those sequential or non-sequential scenes or segments of the program whose content and form of expression are consistent with the viewer's preestablished video content preferences. The playing of a variable content program does not require that the viewer preview the contents of the segments of the program, and does not require viewer intervention during the viewing of the program.

Thus, the present invention while challenging the video program producer to fully exercise the freedom of expression, provides for the automated, seamless transmission of non-sequential video segments containing that level of artistic expression that is consistent with a viewer's preestablished video content preferences. The present invention, effectively harmonizing what are regarded in the popular press as conflicting objectives, provides an unparalleled opportunity for "freedom of expression and freedom from expression" (C).

These and other features, advantages, and objects of the present invention, are more easily recited and are apparent in the context of the detailed description of the invention, accompanying drawings, and appended claims, that follow.

BRIEF DESCRIPTION OF THE DRAWINGS

FIG. 1 is a flow chart summarizing the steps of producing a variable content program as per the present invention;

FIGS. 2A, 2B, 2C, and 2D, are illustrations of video segment descriptive structures as per the present invention;

FIGS. 3A, 3B, 3C, are diagrams of three versions of a video segment and corresponding descriptive structures, each segment a variation of the other as per the present invention;

FIG. 3D is a diagram representation of a variable content program showing the non-sequential arrangement of segments as per the present invention;

FIG. 3E is a diagram representation of a variable content program reading stream and transmission stream as per the present invention;

FIG. 4 is a sample video content preference selection screen as per the present invention;

FIG. 5 is a schematic diagram of a random access video technology device comprising fiber optic communications and variable content laser disc capabilities as per the present invention;

FIG. 6 is a schematic detail of a laser disc module's multiple reading units architecture as per the present invention;

FIG. 7 is a schematic diagram a video program provider and subscriber network architecture as per the present invention;

FIGS. 8A, 8B, and 8C, are flow charts summarizing the process of playing a variable content program as per the present invention; and

FIG. 9 is a flow chart summarizing the process of previewing flagged segments as per the present invention.

DESCRIPTION OF THE PREFERRED EMBODIMENT

The steps in the production of a variable content program are summarized with respect to the simplified flow chart of FIG. 1. Each scene or fragment of a scene on a video script is reviewed **130** according to an appropriate segment descriptive structure, as for example detailed with respect to FIGS. 2A–D. A screenwriter now has the freedom to expand the scenes by adding parallel, overlapping, and transitional segments, to cover a wider descriptive range **140** without the concern for the limitations inherent in first generation program formats. A successful filming **150** of this variable content architecture is a function of the skill of director(s), actors, animators, programmers, etc. to provide for parallel and transitional segments with the required transparent harmony.

In contrast to the editing of first generation motion pictures that require producing a unique linear sequence of segments, editing of this program format requires a parallel, non-sequential, logical arrangement of segments **160**. A segment assigned a category descriptor may be congruent in one or more frames with a segment assigned a different category descriptor. Where necessary, a video segment is associated with more than one audio segment, and corresponding separate voice and video category descriptors are provided. The editing of a variable content program is significantly distinguished from the editing of an interactive motion picture is that in the latter the editing is concerned with a branching story-line, while editing in the former is principally concerned with optional forms of expression of the same story-line.

The complexity of a variable content program/game is only limited by the requirements, desires, skill, and hardware/software available to the program editor. To that extent, it is intended that the editing functions, in particular, be assisted by integrated computerized editing resources. With respect to the computer assisted editing, the teachings of the patents to Bohrman, previously cited, and to Kroon et al., U.S. Pat. No. 4,449,198, are by reference incorporated herein. It should be appreciated that the art of program editing under this new format is intended to significantly transfer censorship, and time-constrained editing decision making from the producer/editor to the viewer.

As each segment is defined, the beginning frame and end frame in each of the relevant segments is identified, the segment content is assigned a category descriptor, and logical entry and exit references are assigned **170**. The resulting segment definition is mapped **180** and the required user interface produced. The program segment map, any user interface routines particular to the program, and player control codes, if required, are provided with the information comprising the programs video and sound.

FIGS. 2A, 2B, and 2C illustrate examples of generalized descriptive structures that are utilized to review the contents of each segment contained in a given program, and to assign the appropriate segment content descriptors. Specifically, FIG. 2A illustrates a descriptive structure **210** implementing a descriptive scale **211** that mirrors the current rating system utilized by the MPAA (Motion Picture Association of America, Inc.). The MPAA's "Voluntary Movie Rating System" comprises the symbols "G", "PG", "PG-13", "R", and "NC-17" and the corresponding legends, which are trademarked/pending by the MPAA.

The descriptive structure, further includes, in this example, a number of categories **212** of conventional concern in the popular culture. Each number in the matrix **219** in the chart represents the particular descriptor for a given category that can be assigned to a specific scene or segment. For example, a scene of an old western style barroom brawl might be assigned a 130-4 (graphic violence). While the absence of an element is presumed, unless otherwise indicated, as an example, the absence of bloodshed is assigned a 135-1 (no bloodshed).

The contents of a segment are further coded on the basis of a number of other considerations. FIG. 2B is an example of an element descriptive structure **220** utilized to analyze the development **221** of a number of elements **222** such as character, location, time, degree of detail, and the level of expertise appropriate for the segment. In a similar manner, an individualized, tailored, and descriptive structure may be provided for any one category or group of categories. For example, FIG. 2C illustrates a descriptive structure **230** utilized to classify segments according to a level of inclusion **231**. Such a structure is appropriate, for example, in coding a news report.

Additionally, or alternatively, a video segment descriptive structure, as shown in FIG. 2D, is implemented that incorporates the MPAA's movie rating system. Under this video segment generalized descriptive structure **240**, segment definitions are assigned a descriptor (rating) **249** from a descriptive scale **241** incorporating the MPAA rating symbols **249**, or any other available analogous rating system. Determination of each segment's rating symbol being similar to the manner in which the MPAA rating system is applied to a motion picture. While this rating scale **241** may be implemented in conjunction with categories, as detailed with respect to FIGS. 2A, and 2B, a simplified embodiment is not concerned with identifying the category, instead, the segment definition comprises frame information and a simple descriptor (rating).

It is noted that FIGS. 2A–2D are examples of an overall framework for segment analysis, the actual descriptive structures and level of complexity utilized may be highly tailored by the producer of a program to reflect the specific content of a program without being limited by the structures which will be widely accepted, constitute a standard, and found to be generally utilized in other works. Each program

producer is offered the flexibility within the overall architecture of this descriptive structure to determine and include only those categories that are relevant to a particular program, and to add categories as the producer requires. Similarly, the producer is offered some flexibility in determining the labelling of the descriptive scale.

Meeting the objectives of being able to provide both a standardized set of descriptive structures that permits the automatic application of a viewer's preestablished preferences to a variety of programs, and provides the producer of the program the flexibility described above, are accomplished for example by assigning unique classification codes to each set of preestablished standardized categories, and by reserving a range of classification codes that are recognized by the system as requiring additional selection by the viewer.

FIG. 3A illustrates an example of a conventional motion picture program in which the segments are arranged as a unique sequential arrangement of frames. In a variable content program adaptation of the conventional motion picture, the various scenes **302** of the program are, according to an evaluation of the contents of the scenes, divided into appropriate segments **303**. Each segment is identified with a beginning and ending frame and comprises any number of frames **304**. In this example, scene three is divided into four segments, in which segment **3***ii* **311** begins at frame **4112** and ends at frame **6026**. The next segment, **3***iii*, begins at frame **6027**. Segment **3***ii*, which in a conventional motion picture contributes to an "R" rating for the program, includes frames depicting explicit bloodshed. The content of segment **3***ii* **311** is indicated by the numeral 3 in the appropriate cell **319** of that segment's descriptive structure.

Referring now to FIG. 3B, to provide for the option of editing-out the explicit bloodshed in a variable content program, the program segment map includes an additional segment definition **321** beginning at frame **4112** and ending at frame **5205**. The end of this segment **321** is linked to a new transitional segment **322** beginning at frame **35205** and ending at **35350**, the end of which is linked to frame **6027**. In this fashion, frames are omitted and added to provide a continuous transparent edited version of any segment. This frame sequence **321/322** is associated with the corresponding segment content descriptive structure **329** to indicate the absence of bloodshed. In all other respects the segments **321/322** are equivalent to the original segment **311**. For first generation programs, the editing-out works in a like manner except that the transitional segment **322** is not available to make the seamless transmission from frame **5205** to **6027** transparent.

To provide for the option to include a graphic level of bloodshed, the program segment map includes an additional segment definition. Referring to FIG. 3C, in this case, only 66 frames of the "first" segment **311** are "ignored", and new segment definitions **331** and **332** are created, to accommodate the graphic bloodshed included in an additional segment **333** beginning at frame **35351** and ending at frame **38975**. This frame sequence **331/333/332** is associated with an appropriate segment content descriptive structure **339**. In this manner, parallel and transitional segments provide a descriptive selection mix ranging from a segment combination excluding bloodshed **321/322** to a segment combination including graphic bloodshed **331/333/332**, as well as the segment combination including explicit bloodshed **311**. As a result, the particular scene of which these segments are a part can be viewed at any of the three content levels for that category.

A scene can include subject matter of more than one category. In such cases, overlapping segments and transitional segments are provided to permit viewing of one subject matter at one descriptive level and viewing of another subject matter at another level.

Referring now to FIG. 3D, the location of the net additional frames that result from the additional segments **322/333** cause some frames to be non-sequentially placed in the variable content program **399**. Ignoring the frame numbers of segment **322**, FIG. 3D is illustrated to diagrammatically emphasize the resulting sequential and non-sequential random-like arrangement of video segments in a variable content program. This is shown for example, in the segment combination **331/333/332**, depicting explicit bloodshed and the corresponding non-sequential frame sequence.

The segments combinations shown comprising the segment definitions together with the corresponding descriptors comprise a program segment map. A program segment map causes, for example, the retrieval of the segment combination beginning at frames **4112–5109**, followed by frames **353514–38975**, and ending with frames **5175–6026** in response to the application of a viewer's program content preferences to the program segment map.

In an actual feature length variable content motion picture the significant additional segment/frames are arranged responsive to the particular random access hardware architecture implemented. For example, FIG. 3E, illustrates an arrangement in which the reading unit reading stream **341** comprises alternating frames from four separate segments and is read at an effective rate of 120 frames per second. The processing architecture selecting the desired segment from the read stream **341** to generate a transmission stream **342** of the desired frames **351A–353A** at a rate of 30 frames per second. This and other architectures are detailed later on with respect to FIG. **6**.

A system embodying the teachings of the variable content program provides each viewer the opportunity to define personalized video content preferences. The content preferences identifies each viewer's preferences in a range of video content categories. The architectures of a viewer's content preferences and that of the segment content descriptive structures are interrelated. As is detailed below, the preferences are established prior to transmission of the program to the receiver, so that during the transmission of the program viewer intervention is not required.

FIG. 4 illustrates a program's categories descriptive chart **401** that merges the various descriptive structures of the segments of a program. For example, the category bloodshed **411** indicates that the program offers options to omit the viewing of bloodshed, or include explicit or graphic segments in the viewing of the program. In this example, depicted by bold boxes is the viewer selected level for each category. The viewer in this case has elected to omit bloodshed **412** in his/her viewing of the program. In this particular screen design, viewers indicate their selections by following the entry requests **421**, and pressing the appropriate numeric keys on the player's remote control unit to indicate the category they wish to access **422** and the viewing level for the category **423**.

In simplified terms, any segment with a descriptive level higher (abstract) than the viewer-selected level for a given category is not included in the program produced for the viewer. The segment selected for viewing (a descriptive level equal to or next lowest) provides the next segment beginning frame information, skipping over parallel segments of a lower rating than the viewed segment.

While the teaching above are detailed principally in terms of a variable content motion picture movie, clearly the

teachings are applicable to any video program. Specifically, interactive video games utilizing full motion video segments can also benefit from providing the viewer/player of the game the option to preestablish video content preferences in addition to the gaming options which may be included in the video game software. As in a variable content program, in a interactive variable content video game, the video segments shown are consistent with the player's video content preferences.

The preferred hardware architecture of a video system that embodies the teachings of, and delivers the benefits of, the variable content program is referred to herein as a Random Access Video Technology system ("RAViT") (C), and is specifically detailed with respect to FIG. **5**. Referring to FIG. **5** a preferred configuration of a RAViT **500** device principally comprises the following primary modules and sub-systems: i) random access laser video/data disc module **501**; ii) communications module **502**; iii) fixed memory sub-system **503**; iv) removable memory sub-system **504**; v) compact portable memory sub-system **505**; vi) external video/sound input/output support module **506**; vii) multi-user modules **507**; and viii) multi-services modules **508**.

A fixed memory sub-system **503** refers to any non-volatile memory storage device principally utilized to randomly read/write and store significant quantities of information. An example of a present fixed memory storage sub-system is a personal computer hard disk drive, currently generally installed in 80–240 MB capacities.

A removable memory sub-system **504** refers to any non-volatile memory storage device principally utilized to transport information to and from two similarly equipped devices. Examples of present removable memory storage sub-systems are personal computer floppy disk drives 1.2 MB, micro floppy disk drives 1.4/2.8 MB, backup tape drives 60–240 MB, and removable hard disks 20–80 MB. The random access laser disc module **501** is another example of a removable memory storage sub-system.

A compact portable memory sub-system **505** is principally distinguished from a removable memory sub-systems **504** in the size of the media and the greater variety of memory storage technologies that are generally implemented. Nonetheless, some of the removable memory storage media such as for example, the micro floppy disk, are also considered compact portable memory media. With present technology, compact portable memory media is available in dimensions similar to conventional credit cards. Examples of compact portable memory are: laser read/write cards, in which at least one surface of the card permits a laser to read/write information; electronic cards, in which the information is stored in electronic components; and magnetic cards embodying magnetic storage technology, of which a credit card is an example. Other examples of compact portable media are electronic cartridges commonly utilized in electronic video games systems.

Clearly, a variety of memory devices are available utilizing technologies and combinations of technologies to suit particular performance requirements. The above classifications of the memory devices are directed at bringing attention to functional capabilities of RAViT rather than to a particular technology. The classifications are not intended to restrict a device to a particular classification, limit the selection of devices which may be implemented, or to limit the function of the particular device implemented.

From a marketing standpoint, it is also preferred that RAViT additionally "play" other laser media, such as for example current laser discs, CDs, CDGs, photo CDs, and interactive programs and games, in a conventional manner. This being diagrammatically shown in FIG. **5** as the five circles inside the representation of the laser disc unit **501**. In this context, it is also noted that the multimedia capabilities in RAViT in combination with its ability to extract video/sound/data from these sources offers the user sophisticated CD-ROM like capabilities and interactive full motion video gaming capabilities. As to the latter, RAViT's hardware configuration detailed herein is significantly more capable than interactive CD-based video games such as for example Sega's CD ROM System for Genesis.

In a preferred embodiment, RAViT is a fully integrated viewing/gaming/computing video system. To that extent and given the other teachings that follow herein, RAViT's laser disc module will operate at the required rotational rate to accommodate differences in software rpm requirements. This being analogous to the different available speeds in a record player.

The external video/sound input output support module **506** supports video/sound/data transmission to the primary video display system comprising for example a monitor/television, stereo system, and keyboard/voice recognition-response, Additionally, the input output module supports video/sound input from local sources such as for example VCR's, video cameras, and videophones. The construction of the external support module follows the conventional practices of consumer electronic products as for example: laser disc players, VCRs, and personal computers.

Multi-user modules **507** principally support separate controlled independent access by other users of RAViT's processing, video, and communications resources. A multi-user operating system such as for example a version of Unix or Windows NT, manage the multi-user environment. The construction of multi-user modules following established networking technology and responsive to the operating system implemented.

Multi-services modules **508** provide a host of services, such as for example residential security, and appliance operation management. The operation of the module being principally a software application running under the multi-user operating system implemented. The construction of the particular multi-service module being responsive to the particular application. Example of a primitive multi-service module is a fax/modem pc card.

RAViT further comprises computing elements and video processing elements readily found in multimedia devices and video electronic systems such as for example and not limitation: i) microprocessor **511**; ii) memory units **512**; iii) video processor **513**; and iv) video buffers **514**.

RAViT's user control interface **531** includes communications to the buttons and keys located on the cabinet of the device, and to the associated control devices **541–2–3**. The keys, buttons, and switches, conventionally found in consumer electronic devices and deemed advantageous to the operation of RAViT are implemented. These controls are further augmented by the following keys/functions: segment skipping control, preferences control, segment mapping control, and system menu control. The user control interface **531** additionally supports infrared remote control units **541**, as for example infrared numeric control pad, and infrared keyboard; wire connected control units **542**, as for example cable connected computer keyboards, mouses, and game controllers; and voice recognition units **543**.

The keyboard, as in a personal computer implementation, facilitates system setup, keyword retrieval, and system functions requiring the entry of alpha characters. Since a pre-

ferred configuration of RAViT comprises significant multimedia capabilities, a keyboard is advantageous. A keyboard connector used to connect a standard AT keyboard or a dedicated keyboard is supplied. Alternatively, an infrared-based keyboard is implemented. Further, given the computing and storage capabilities of RAViT, a voice response sub-system option accommodating minimally the few commands, such as play, stop, mute, sound, skip, required to control the basic operation of the laser disc module can additionally be provided.

Implemented in RAViT is a digital system status display sub-system **532**, which provides visual feedback and system status information.

RAViT's control programs that manage RAViT's resources, and the retrieval and processing of data and video information, reside in dedicated chips **521**. Alternatively, the control programs are stored in mass memory devices **503** from installed software, in removable memory media **504**, or in a compact portable memory device **505**.

A variable content program not only comprises variable content video/sound information, but also comprises a corresponding program segment map, user interfaces, program routines, and system control codes. In an interactive variable content video game, the video game software also comprises a variable content program. The terms "program segment map" and the term "data", where not inconsistent with the context, are to be understood to comprise the program segment map, user interfaces, program routines, system control codes, and gaming software (where applicable). Wherever the terms "variable content program" are found, and the context permits, they are to be understood to comprise all the video/sound and "program segment map" elements.

In a preferred laser disc implementation, the entire variable content program (video/sound and program segment map) is provided in a video/data disc in a format similar to that required by the video images contained in the disc. Alternatively, the data is provided in the video/data disc in a different format from that of the video format, such as for example in digital photomagnetic or magnetic formats. In this respect the teachings of the patent to Smith, U.S. Pat. No. 4,872,151, are by reference herein incorporated. In a second alternative, the data is separately provided by a removable memory media **504**, a compact portable memory device **505**, or downloaded by means of the communications interface **502**.

A RAViT simply configured and comprising a laser disc module **501** and for example a micro floppy disk drive **504** provides editing out benefits for the existing library of motion picture laser discs. In this configuration, the micro floppy disk provides the program segment map, user interface and other control programs particular to the motion picture, and stores a viewer's video content preferences. While the resulting program suffers, as does edited-for-television programs, from the lack of transitional, parallel, and overlapping segments, this technique provides an immediate library of full motion pictures to which the teachings of the present invention is applied.

Upon a playing of a program, the control program causes the reading of the program's identifier from the program source **501**, searches the mass memory fixed storage device **503** for a corresponding viewer preferences, or applicable generic preferences, and upon viewer confirmation applies the stored viewer preferences to the program segment map.

With respect to control programs, scheduling routines, viewer preferences, program segment map, and other principally software elements, it is noted that these may be separately or jointly stored in any one of RAViT's various firmware/hardware memory devices. For example, the viewer preferences are stored in non-volatile resident memory **515**, in the memory of the fixed or removable memory sub-system **503/504**, a user's optical read/write access card or electronic memory card **505**, or from the respective read write video/data laser disc **501**. In an interactive video game application, data in general, and game software in particular, for example, may be downloaded to the hard disk, reserving subsequent access of the laser disc for video/sound retrieval.

Generally, the control programs **521** generate a segment table reflecting the application of the viewer's preferences to the video program's content map. The segment table provides the control program's segment scheduling routines the information to cause the automated logical selection of sequential and non-sequential segments of the video program responsive to program segment map, the viewer's preferences, and the logic of the gaming software where applicable. The processing of the control programs being principally a function of the system cpu **511** and system RAM **512**.

RAViT's video random access retrieval architecture principally comprising the video/data laser disc module **501**, video cpu **513**, video buffers **514** and processing capabilities, provides for the retrieval and transmission of selected sequential and non-sequential video segments stored in the disc. In terms of the integration of laser disc and processing capabilities and the retrieval of non-sequential video frames, the teachings of the patent to Blanton et al, U.S. Pat. No. 4,873,585, which details a system comprising a video disc player for storing and retrieving video frames, and a control computer for accessing particular sequences of stored frames on the video disc, are by reference incorporated herein, and are relied upon to detail the core operation and construction of a laser-based random access system. With respect to laser read/write units an read/write laser discs, the prior art teachings of laser disc players, such as for example Pioneer's Rewritable Videodisc Recorder VDR-V1000, and the teachings of the patent to Matsubayashi, U.S. Pat. No. 5,132,953, are by reference incorporated herein.

RAViT's laser disc module **501** comprises laser disc technology distinguished principally in the cooperative operation, responsive to the instructions of the segment scheduler, of the multiple read/write laser units to produce a continuous transmission of non-sequential video segments. In a laser-based random access multiple read/write architecture, each read/write unit assembly and operation is principally equivalent to corresponding laser-based assemblies found in the prior art, in which a laser beam reads and reproduces memory signals from a disc.

Referring now to FIG. **6**, the principal elements of a laser-based random access multiple read/write units architecture as per the present invention are illustrated. FIG. **6** shows a laser disc **601** having therein, in a laser readable format, sufficient recording area **611** to store a variable content program. The recording area **611** of the laser disc **601** is shown as substantially concentric tracks lying in a single plane. Alternatively, the recording area comprises a multitude of quasi-concentric tracks forming one or multiple spiral tracks. Additionally, tracks can be provided in one or more planes on each side of the laser disc, as well as on both sides of the disc.

Referring now to FIG. **6** in conjunction with FIGS. **3C** and **3D**, in a preferred embodiment of reading non-sequential

video segments from a single video source, a first reading unit **621** is directed by the segment scheduler to retrieve video information corresponding to the desired frames **4112–5109** of a first, or current, video segment from a video source. Concurrently with the first reading unit **621** reading the information from the first segment, a second reading unit **622** is positioned, according to the program segment map and the segment scheduler, to preread within one revolution of the disc beginning frame information of a next non-sequential segment from the same video source.

In this example, the next non-sequential segment begins at frame **35351**. Concurrently with the first reading unit reading **621** the current segment, the second reading unit **622** is caused to preread into a video buffer (**514** FIG. **5**) that portion of the next non-sequential segment beginning at frame **35351** necessary to provide a seamless transition from the first reading unit reading of the current segment ending at frame **5109** to the second reading unit reading of the next non-sequential segment beginning at frame **35351**. The video buffer, thus containing the segment information necessary to provide a synchronized, seamless transition from the first segment to the second segment without any gaps in the transmission of the retrieved video segments as a continuous video program.

Concurrently with the second reading unit **622** reading the next non-sequential segment, now a current segment, the first reading unit **621** is repositioned to begin prereading of a next non-sequential segment beginning at frame **5175**. By the time the second reading unit **622** completes reading the current segment at frame **38975**, the first reading unit **621** has preread frame **5175**. The process, analogous to a relay race, repeating itself until the last desired segment has been read.

In an interactive video game application, a multiple reading unit architecture is advantageously utilized to additionally provide faster video responses to the user/player's actions. Briefly, while a first reading unit **621** is reading a first video segment, frames **4112–5109**, a second reading unit **622** is positioned to read a second segment beginning at frame **35351**. The positioning of said second unit **622** being responsive to the option being presented to the player during the reading of the first segment which may require reading the second segment rather than continuing reading the first segment or reading the next sequential segment. Alternatively, the second reading unit provides overlay images in synchronization with the images retrieved by the first reading unit.

Each reading units's movement over the disc surface is over a designated radial segment such that the movement of each reading unit over the recorded radius of the disc is not impaired by the movement of a different reading unit. In this fashion, the movement of the first reading unit **621** over its radial segment **631** does not intersect the movement of the second reading unit **622** over its radial segment **632**.

It is noted that the reading unit's travel need not be limited to the radial segments. A positioning system providing for the positioning of the reading unit at any point over the recording media, provides the reading unit the potential to precisely intercept the beginning of a segment/frame at a precisely defined moment. This being represented in FIG. **6** as the juncture of a radial segment **631** and the beginning of frame **5175**. In this fashion the requirement of prereading into a video buffer can be reduced if not eliminated.

FIG. **6** also shows a third reading unit **623**. While a simple variable content motion picture application does not require more than two reading units, the third reading unit **623** is illustrated principally to emphasize that a multiple-read architecture is not limited to two reading units **621–622**, and is available for more demanding interactive variable content game applications. Further, as illustrated, a reading unit's movements over the recorded surface need not be confined to a particular quadrant, side of the surface, or radius of the surface. In the illustration the third reading unit's **623** movement over the recorded surface is permitted over the recorded diameter **633** of the surface.

Additionally or alternatively, the information is recorded on the laser disc in a manner that, either through placement or duplication of frames, anticipates the desired and possible position of a reading unit. In this case, even if the movement of the reading units are confined to radial segments, the requirement of a video buffer is for this purpose eliminated. This also being represented in FIG. **6** as the various junctures of the radial segments and the beginning of the frames.

Specifically, in this architecture, concurrently with a first reading unit **621** reading a current segment from a single video source, a second reading unit **622** is positioned to be able to intercept and read the beginning of a next non-sequential segment, in this example frame **35351**, at that instant that the first reading unit **622** completes reading the current segment at the end of frame **5109**. At that the first reading unit **621** completes reading frame **5109**, the second reading unit begins reading frame **35351**, thereby in combination with the first reading unit causing a seamless transition from the reading of the current segment to reading of the next non-sequential segment.

In the next stage, concurrently with the second reading unit **622** reading the beginning of the next non-sequential segment at frame **35351**, now a current segment, repositioning the first reading unit **621** to be able to intercept and read the beginning of a next non-sequential segment, frame **5175** at that instant that the second reading unit completes reading the current segment at frame **38975**. The process continuing until all the required segments are read.

Still additionally, or alternatively, the rotational speed of the disc platter is set sufficiently high to permit the reading unit to read into buffers sufficient video information to provide the same reading unit sufficient time for repositioning and begin reading the next non-sequential segment before the video information in the buffer is exhausted. This would in certain applications eliminate the need for multiple reading units.

Specifically, in the reading of non-sequential video segments from a single video source, a single video source **601** is caused to rotate at a sufficiently high rate **641**, in this example 60 frames per second or 3,600 rpm **641**, i.e twice the rate of 30 frame per second **642**, to permit a reading unit **621** to both read and preread an amount of a current segment (frames **4412–5109**) into a video buffer sufficient for the reading unit **621** to be repositioned to read the beginning of a next non-sequential segment, frame **35351**, before the preread amount in said video buffer is exhausted. In this example, prereading frames **4498–5109** provides the reading unit **621** sufficient time to be repositioned to read a next non-sequential segment, frames **35351–38975**. Concurrently with the repositioning of the reading unit, the video buffer provides the last preread frames **4498–5109** to cause a seamless transition from the reading of the current segment, frames **4112–5109**, to the reading of the next non-sequential segment, frames **35351–38975**. The process continuing until all the required segments are read.

In this architecture, the reading unit prereads into the buffer only in advance of a next non-sequential segment, or

continually prereads into the video buffer as the video information in the buffer is depleted.

A variation of this technique particularly applicable to interactive video game applications is detailed with respect to FIG. 3E. In this example, previously summarized, a read stream comprises alternating frames from a number of different video segments. The number of different video segments resulting from the attainable effective transfer rates of the system. For example if the video application requires a transfer rate of 30 frames per second, and video compression techniques, rotational speed, and/or reading capability of the system can achieve an effective transfer rate of 120 frames per second, than four different video segments can be read "concurrently" by a single reading unit. In such an architecture, the frame arrangement comprises a reading stream **341** of alternating frames from four separate segments A–D and is read at an effective rate of 120 frames per second. The processing architecture selects the desired segment A,B,C, or D from the read stream **341** to generate a transmission stream **342**, at a rate of 30 frames per second, of the desired frames **351**A–**353**A, **351**B–**353**B, **351**C–**353**C, or **351**D–**353**D.

To further detail, and with respect to FIG. **6**, a single video source **601** is caused to rotate at a sufficiently high rate, for example 60 frames per second **641** or 120 frames per second 643 to permit a reading unit **621** to read at multiples of the 30 frames per second rate required to transmit a single one of a plurality of video segments (A–D). Referring once more to FIG. 3E, the frames being intermittently arranged as a reading stream **341** in the video source. As the reading unit is caused to read the reading stream **341**; a video processor (**513** FIG. **5**) extracts from the reading stream **341** a transmission stream **342** representing a single one of the plurality of video segments.

In this fashion a single reading unit can provide instantaneous shifting among a number of different segments. In an interactive video game application, shifting among a number of different video segments can be instantaneously achieved in response to a players interaction with the game's software logic.

To enhance the simulation of each video stream, a windowing technique, such as shown in the previously cited patent to Blanton et al., in which only a portion of each frame is displayed, is applied to each frame in one or more of the video streams to enhance the simulation of movement within a multi-dimensional space and to provide composite images of greater complexity.

These and other variations in the particular number and arrangement of the reading units, video buffer, and frame arrangement configuration that is implemented in a RAViT is a function of the complexity of the video/data, and cost/performance constraints. It is also intended that the teachings of the various configurations shown herein and in the cited art may be combined responsive to the particular application. Clearly, with technology continuously achieving greater storage capacity in smaller, faster, and more cost effective storage devices, there is no apparent limitation to the complexity of the variable content program that can be commercially executed.

The description above has for simplicity been detailed with respect to a reading unit. It is to be understood that a reading unit herein comprises both reading and writing capabilities operationally independent of the operation of another read/write unit in the system's architecture. Additionally, a read write unit need not be limited to a particular current architecture, enhancements to the construction of the reading unit itself, such as for example multiple tracking mirrors/beam splitters, are contemplated to produce faster access times and transfer rates. Further, the multiple read/write architecture detailed need not be limited to a laser disc system. In an alternate embodiment, a hard disk drive is modified as per the teachings above detailed to significantly increase transfer rates and lower average access times. Clearly, at present, in a hard disk embodiment the read/write units are magnetic read/write heads.

Generally, the viewing of a variable content program is intended to be hardware independent. That is, a variety of hardware, firmware, and software architectures are possible either locally or remotely accessible by the viewer that provide the benefits of a variable content program. In particular, a random access device's read/buffer architecture, modified as per the present invention, is intended to be implemented in a variety of mass memory devices. Embodiments of the read/buffer architecture detailed herein is not intended to be limited to any particular available recording medium and recording format technologies. The teachings of the present invention are applicable to a number of random access technologies such as, for example, and not limitation, fixed and removable magnetic, optical, or photomagnetic media, and digital or analog recording formats. Any combination of existing or forthcoming media, format, and compression memory technologies may advantageously incorporate the teachings herein detailed.

In general, parts, sub-assemblies, and components of a RAViT are of conventional characteristics and are freely substituted by like functioning elements and components. For example, and not limitation, while fiber optic-based communications are preferred, copper phone lines and coaxial cable-based communications are considered, albeit less capable nonetheless, functional equivalents. Additionally, a certain degree of redundancy of components is illustrated in FIG. **5** to schematically show and detail significant functions. Clearly, redundant components in general, and redundant electronic components in particular, are intended to be eliminated in a preferred embodiment. For example, in a number of configurations a removable memory sub-system and a compact memory sub-system are both required. In a general sense, one is the functional equivalent of the other. In a preferred embodiment, for example, a removable memory sub-system is eliminated, and the compact memory sub-system performs the functions that are associated with it. In general, where cost effective, components are designed to serve a combination of functions.

Further, the configuration of RAViT's various modules, components, and sub-systems, are intended to offer flexibility analogous to that found in a personal computer. Specifically with respect to the multi-user capabilities, a RAViT may be configured, for example, with more than one laser disc module. Whether inside the primary cabinet or in a mating or sister cabinet. Responsive to user friendliness, a more advanced wireless plug and play communications and power motherboard and cabinet design is preferred. The motherboard and cabinet permitting the replacement of, for example, the power supply just as easily as a battery is replaced in a portable personal computer. In a preferred embodiment of RAViT, every component and sub-system is replaced without resorting to screwdrivers and the need to unplug and plug communications and power cables.

While an embodiment of the present invention is detailed above with respect to a random access video laser disc device physically accessible by the viewer, variations are also possible. For example, the laser disc device need not be

Case 1:04-cv-21140-PCH Document 1 Entered on FLSD Docket 05/14/2004 Page 42 of 118

physically located near the television set. The patent to Fenwick et al. U.S. Pat. No. 4,947,244, by reference incorporated herein, discloses remote video distribution systems such as may be found in a hotel, wherein the viewer is provided remote controlled access to video resources. Fiber optic communications easily permit the required transfer rates between a device, or any alternative memory device, and a viewer's receiver/television.

As shown by the hardware configuration detailed with respect to FIG. **5**, RAViT is equally adept at retrieving full motion video from a resident program storage device or remotely from a network-based service provider. A B-ISDN interface, an internal or external modem, or a dedicated communications line, such as for example a coaxial cable, provides RAViT communications capabilities with providers of programming and other on-line services. These other services comprising, for example, banking, security, shopping, instructional, and educational services.

With respect to video-on-demand, and video networks, the teachings of the patents to Monslow, U.S. Pat. No. 4,995,078, to Way, U.S. Pat. No. 4,891,694, and to Walter, U.S. Pat. No. 4,506,387, are by reference incorporated herein. These patents teach a variety of land line and fiber optic transmission of programs embodying varying degrees of viewer capabilities in the selection of programs. While the prior art does not teach transmission of a variable content program, a reading of said art will assist the reader interested in obtaining a more detailed disclosure of the hardware of such systems than is necessary to provide here.

FIG. **7** is a simplified schematic diagram a video program provider and subscriber network architecture as per the present invention. Participants in a B-ISDN **711**, as per the present invention, comprise any number of video program providers **700** and any number of subscribers **721**. As in a communications network, each participant is able to transfer and retrieve video/data transmissions from any other participant. Each participant obtaining a hardware configuration consistent with their desire and their financial means.

The particular configuration of each subscriber's video system's **721/722/723** storage, memory, processing, and communication capabilities is responsive to, but is not necessarily limited by, the minimum requirements of the particular service provider. A RAViT configuration, such as detailed with respect to FIG. **5**, provides the required video program storage, processing, and communications architecture.

The video system of a participant who wishes to serve as a video program provider **700** is functionally equivalent to the RAViT device previously detailed, differing only in that the respective resources are appropriately scaled and modified to simultaneously access a variety of programs, and service a number of subscribers.

A video provider system **700** comprises: i) mass storage random access memory devices **701** for storing a plurality of variable content programs, and a plurality of program segment maps each defining segments of a corresponding video program; ii) communications linkages **702** to the B-ISDN for establishing communications with a plurality of participating subscriber video systems (RAViTs) **721/722/723**; iii) processing hardware/software **703** for retrieving from participating subscriber video system a subscriber's video content preferences, and for automatically selecting, for each of the participating subscribers, variable content program/program segment map, and/or segments, from a programbase, comprising a plurality of variable content programs and corresponding program segment maps, responsive to the application of the corresponding one of the subscriber's video content preferences to the programbase; iv) random access devices **704** for retrieving for each participating subscriber the corresponding selected variable content programs and/or video segments; and v) transmission architecture **705** for transmitting, to each participating subscriber video system, the corresponding retrieved selections. Simply stated, an on-line variable content program provider provides each viewer content-on-demand.

In a preferred embodiment, in response to a subscriber **721** request of one or more variable content program(s) from a video provider **700**, the entire variable content program including all the parallel, overlapping, and transitional segments is provided via the fiber optic network **711**. Alternatively, the program is provided to the subscriber in the form that results from the execution of the viewer's video content preferences, i.e. a logical seamless sequence of only those segments that are consistent with the viewer preferences are transmitted in a real-time or a non real-time format over the network **711**.

Where the subscriber **721** remains on-line with the video provider **700** during the transmission of the video and utilizes the hardware resources of the video provider, a RAViT comprising principally communications capabilities without significant local storage, processing, or memory, is adequate. In such an architecture the viewer preferences are retained by the video provider.

Retrieving video from a remote video provider permits subscribers to efficiently obtain from an extensive programbase a program to be viewed at the time of their choosing, over which they exercise complete control as to the subject matter, form of expression, and other elements comprising the program. Further, the resulting program need not comprise or result from a single variable content program in a programbase. A program may result from the automated selection of a variety of segments/programs from the programbase.

In a video provider, the implementation of the multiple read head architecture provides for the simultaneous retrieval of several versions of a program from a single program source to satisfy simultaneously the particular viewing requirements of several subscribers. A multiple read head architecture reduces, for example, the number of copies of a program that the on-line video provider requires. Alternatively, where cost effective, a variable content program may be entirely or partially stored in RAM.

It is also important to note that the novel combination of an external fiber optic based communications module and a multiple read/write units laser disc module, provides a RAViT configuration capable of efficiently downloading significant amounts of full motion video to be viewed, played with, or processed at the subscriber's leisure. In such a RAViT the downloading of, for example, a feature length motion picture, an interactive video game, or a series of lectures can be achieved with unprecedented speed.

The previously shown capacity to read/write the viewer preferences from/to a compact portable memory device **731** provides a viewer the means to automatically configure a RAViT that had not previously learned the viewer's video content preferences (dumb RAViT).

Referring once more to FIG. **7**, in anticipation of the desire to efficiently utilize a dumb RAViT, a viewer instructs the smart RAViT **721** to download to a compact portable memory device **731** the desired viewer preferences and program request routines. To automatically configure and retrieve programming consistent with the preferences and

program request routines, the viewer provides the prepared compact portable memory device **731** to the dumb RAViT **722**, or to an accessory device **732** in communication with the dumb RAViT **722**. The compact portable memory device **731** automatically configuring the dumb RAViT without necessarily downloading the viewer preferences other than to volatile memory. The operation being similar to moving a game cartridge from a first game player to a second game player.

In this context, programming request routines automate the retrieval of desired programming from a programming services provider **700** accessible to a RAViT **722**. In this fashion, for example, a travelling executive can automatically configure each days new hotel room RAViT to retrieve videophone messages, the day's news in a format and for topics preestablished by the executive, followed by a menu of recently released films that the executive has not seen. The operation being analogous to inserting an access card in a hotel room door.

Alternatively, a similar automated configuration is performed by means of line-based external communications capabilities **711** available to both the dumb RAViT **722** and the smart RAViT **721**.

As indicated with respect to FIG. **5**, and represented in FIG. **7**, multi-user and multi-services modules support separate controlled independent access by other users of RAViT's processing, video, and communications resources. In addition to the primary video display system **741** supported by RAViT **721**, the multi-user module and multi-services module installed in this example support a separate monitor/keyboard **742** access to RAViT's **721** resources, and cooperatively supports the operation of a security system **743**.

Before proceeding with a detailed description of the steps of utilizing a variable content video disc on RAViT, it is important to appreciate that in general following the initial setup of RAViT with a viewer preferences, a subsequent viewing of a variable content program conforming to the standard structure only requires the pressing of a play key. Following the pressing of the play key, RAViT automatically initiates playing of the video program without the necessity of any further viewer interaction or instructions. In other words, in a standardized descriptive structure architecture, once RAViT initially learns the viewer's preferences, it does not require any more of the viewer than, for example, a conventional laser disc player. Similarly in the playing of an interactive variable content game, once RAViT initially learns the viewer/player preferences, the gaming interaction proceeds transparently of the video editing functions. It is intended that a single viewer preferences serve both gaming and viewing applications. Optionally, the viewer may establish separate viewing preferences for each of the classes (e.g. gaming, viewing, computing) of video programs.

The steps comprising the method of viewing a variable content program on a RAViT are detailed with respect to the flow chart of FIGS. **8A**, **8B**, and **8C**. Beginning at step **801**, the viewer selects and retrieves the desired program consistent with the architecture of the particular RAViT hardware implementation. Upon selection of the play function **802**, RAViT's software, firmware, and hardware processing capabilities ("processor") issue a command to read the viewer control setup to ascertain if viewer control is enabled **803**. If enabled, RAViT's handshaking routines request viewer identification and, if required, a corresponding password **804**. If the viewer identification and password are not found acceptable **805**, the appropriate error message is transmitted to the television **806**, and RAViT is returned to a state prior to the viewer play request **802**.

If viewer identification and password are found acceptable **805**, the processor checks for other restrictions to a user access **807**. These additional restrictions include: time of day restrictions for the user, and/or accumulated usage during specified time frames. If restrictions are enabled that prevent usage **807**, an appropriate error message **809** is transmitted to the television, and RAViT is returned to a state prior to the viewer play request **802**. The user-permission capability enables a parent to have complete control over the use of RAViT, and provides for multiple individualized preferences.

If viewer control is not enabled **803**, or if enabled, verification of the user **805** and verification of restrictions permit usage **807**, program setup routines are initiated. Referring now to FIG. **8B**, program setup routines **811** include reading, from the program source, program identification information. Based on the program identification information, which in addition to including a unique identification code also contains qualitative and classification program information, setup routines search to see if a corresponding viewer preferences/table for the identified program is available **812**. Otherwise, the program category descriptive structures **813** are obtained from the program source to determine if a viewer preference is established for each of the program categories.

Once viewer preferences are established, the processor verifies set up status for editing privileges **814**, to determine if the viewer has editing privileges for the class of programs to which the present program belongs and the categories included therein. The processor at this point transmits to the television a request for the viewer to indicate if the existing preferences are to be edited **815**. If at step **814** edit privileges are not available for the viewer, the processor initiates normal play routines. If the viewer indicates that no editing privileges are to be exercised **815**, normal play routines are initiated as well; otherwise, editing of the viewer preferences occurs at step **818**.

The edited viewer preferences are interactively verified **819** until an adequate category preference match, as required by the program and the user is established, or the viewer selects to exit. Exiting at **819** returns RAViT to a state prior to the viewer play request **802**.

If a viewer preferences for the login viewer for the selected program is not available **812**, or at least one of the categories of the program is not contained in the viewer preferences **813**, then the processor verifies if edit privileges are available for the viewer for the class of programs and the categories **816**. If no edit privileges are available, an exit message **817** is transmitted to the television, and RAViT is returned to a state prior to the viewer play request **802**. If edit privileges are available **816**, then editing of the viewer preferences **818** is initiated.

Editing the viewer preferences **818** is supervised to insure that viewer modifications are consistent with the permissions established for that viewer. Individual viewer permissions are established broadly for any one or more classes of programs or categories, or specifically for any category. Once editing of the preferences is found complete **819**, as required by the program category listing, play routines are initiated.

Referring now to FIG. **8C**, following the enabling of the play routines **821**, the program segment map is read **822** from the program segment map storage media or memory. As previously detailed, the program segment map defining the sequential and non-sequential segments of the selected program. At this point, RAViT's processing capabilities

retrieve and apply the viewer's preferences, stored in a memory or a storage device, to the program segment map **823**. The application of the viewer's preferences to the program segment map results in the automated logical selection of sequential and non-sequential segments of the selected video program **824** consistent with the viewer's video content preferences and the program segment map. Once the segments to be played and their sequence are determined **824**, the random access retrieval and transmission capabilities of RAViT automatically retrieve the selected sequential and non-sequential video segments stored in the video program storage device, and transmit the video segments as a seamless, continuous video program **825**.

In a interactive video game, the start and setup routines detailed with respect to FIGS. **8**A, and **8**B are integrated with each games setup routines.

As suggested previously, the capabilities of RAViT are particularly well suited to providing an editor (i.e. parent) complete control as to the video material to which a viewer/player (i.e. child) is exposed. As indicated above, RAViT provides: user, time of day, amount of viewing controls; and individual preferences for each viewer/player or class of viewers/players. Additionally, supplementing or alternative routines are provided which are preferable in those instances where: i) segments cannot be rated according to standardized descriptive structures; ii) the utilization of a descriptive structure system is not desired; or iii) a simpler routine provides the desired functionality.

Specifically, the present invention permits an editor to automatically select segments of a video program previously identified in a program segment map as providing material which may not be suitable for a viewer; viewing the selected segments and determining their suitability for viewing by the viewer; automatically generating a listing of segments responsive to the segment suitability determination applied to the program segment map; automatically retrieving the listed segments; and automatically transmitting the retrieved segments as a continuous video program for said viewer. Segments not suitable for a viewer may be defined as segments providing content and form of expression which, in a conventional sense, is deserving of a rating other than a MPAA "G" rating.

Alternatively to, or in addition to the editing system based on the application of descriptive structures, a simplified editing system is based on the "flagging" of segments irrespective of the specific nature of the material which may not be suitable for a viewer. That is all segments containing material not suitable receives the same flag or code. The flagging of segments provides an efficient method of coding and retrieving the segments and indicating their inclusion/exclusion in a program/game to be viewed/played.

An example of the editing routines that provide for the efficient previewing of flagged segments are summarized with respect to FIG. **9**. One of a number of RAViT setup routines present a listing of viewers over which the editor has editorial control. With respect to each viewer and the selected program, the listing indicates if a segment table is already available **901**, and if viewer preferences are available **902** or not **903**. Additionally the option to designate a new viewer **904** is made available to the editor.

If a corresponding table for the desired viewer is available **901** and the editor does not wish to make any changes, than selecting this option exits the routine, the operation of RAViT is then permitted as detailed previously. If a corresponding table for the selected viewer is not available, and the editor does not wish to create or update the viewer's preferences **902**, than the routine proceeds by reading the program segment map **921**. If the editor wishes to modify or create viewer preferences **903**, than the routine proceeds with the appropriate routines **912**. If the editor indicates the entry of a new viewer **904**, the appropriate viewer entry routines are enabled **909**, and the opportunity to create viewer preferences for the new viewer is provided **911**.

The routines to update/create new preferences **912** permit both a program specific or permanent updating of the selected viewer's preferences. Once viewer preferences are indicated, if any, the selected program's segment map is read **921** and compared to the preferences **922** to the extent that they are available.

If all the flagged segments are effectively excluded by the viewer preferences **922**, than the resulting program segment table is saved **941** and the routine is exited. Otherwise, in addition to an initial segment table, a list is prepared **923** consisting of any flagged segments that have a descriptive level lower than the corresponding level in the preferences, and flagged segments for which there is no corresponding preferences. In the absence of viewer preferences every flagged segment is included in the segment list.

In a manner similar to the retrieval of non-sequential segments outlined previously, only the segments in the segment list are shown one after the other **931** as a continuous stream to the editor, pausing only if an include/exclude decision is not indicated **932**. The process continuing automatically **934** until a decision on each of the flagged segments in the list is made **932**. As each decision is made the segment table is updated **933**. Alternatively, the segment table is updated and saved following the transmission of the last segment **941**.

Each segment need not be viewed in its entirety **931**, as soon as an include decision is made **932**, the showing of the next segment begins instantaneously. Additionally, it should be understood that a showing of a flagged segment is not limited to, or indicate, the actual transmission of the flagged segment's video/sound. Appreciating that certain adults may not be interested in viewing the flagged segments, a character description of the contents of the segment may be provided instead or in advance of the option to view the corresponding segment.

The above is presented to emphasize the control features and capabilities of the present invention, the particular routines shown can be enhanced in a number of ways. Configuration routines are contemplated that further facilitate and automate viewer/player controls.

For example, a configuration can be selected that automatically creates for selected or new viewers/players a segment table excluding all flagged segments. In this case at system setup a viewer is simply associated with the exclusion of all flagged segments.

Similarly, additionally, or alternatively, a viewer/player is associated with a descriptor code paralleling the MPAA rating system as previously detailed with respect to FIG. **2**D. At system setup a viewer/player is associated with an appropriate rating code, thereafter, the viewing/playing of a program is consistent with the rating code associated with the respective viewer. The simplicity of the architecture in combination with the teachings of the variable content program permits, for example, by means of a single code associated with each viewer, a parent to view an "R" version of a film, and permits a child to view a "G" version of the same film. It is noted that this architecture provides more tailored control than the simpler exclude all flagged seg-

ments architecture, but significantly less tailored control than a category specific video content preferences. In a preferred embodiment, the various structures detailed above are correlated to permit the application of a variety of content control options without requiring duplicating descriptor definition. For example a assigning a segment a descriptor other than "G" rating is equivalent to flagging the segment.

Clearly, a number of other interactive capabilities are made possible by the architecture of RAViT. For example during the viewing of a program, skip keys cause the automatic skipping of the present segment and the instantaneous viewing of the next logical segment. Other functions permit interactive modification of the segment map, such as flagging a segment, as the program is being viewed. It is intended that a number of other interactive capabilities be implemented which incorporate the teachings of prior art interactive and multi-media system. Specifically in this respect, the teachings of the patent to Bohrman, previously cited, are by reference incorporated herein.

Since the prior art is well established, and many of the features, components, and methods, found therein may be incorporated in the preferred embodiment; and since other modifications and changes varied to fit particular operating requirements and environments will be apparent to those skilled in the art, the invention is not limited to the presently preferred form of the present invention set forth here and above, it is to be understood that the invention is not limited thereby. It is also to be understood that the specific details shown are merely illustrative and that the invention may be carried out in other ways without departing from the spirit and scope of the following claims.

What is claimed is:

1. A video system comprising:

preferencing means for preestablishing a content preference with respect to a level of explicitness in each of plurality of content categories;

communication means for downloading segment information for a video comprising a linear sequence of frames readable from a spiral track of an optical disc, the segment information directly defining at least one segment of the video with respect to a level of explicitness in at least one content category;

selecting means for selecting segments of the video by applying the preestablished content preference to the segment information; and

random access and buffering means for playing from within the linear sequence of frames a seamless version of the video less in length than the length of the video, the playing not requiring an alternate video source and comprising retrieving the selected segments and seamlessly skipping a retrieval of an at least one segment by buffering at least a portion of a segment.

2. The system of claim 1 wherein the segment information is downloaded to the optical disc.

3. The system of claim 1 wherein the video is downloaded to the optical disc from a remote video source.

4. The system of claim 1 wherein the preestablishing is individualized for each of a plurality of viewers and is subject to a password control.

5. The system of claim 1 wherein a modification to the preestablished content preference is responsive to a permission specific with respect to a level of explicitness in each of the plurality of content categories.

6. A video system comprising:

preferencing means for preestablishing a content preference responsive to a rating system;

communication means for downloading segment information for a video comprising a linear sequence of frames readable from a spiral track of an optical disc, the segment information directly defining at least one segment of the video responsive to the rating system;

selecting means for selecting segments of the video by applying the preestablished content preference to the segment information; and

random access and buffering means for playing from within the linear sequence of frames a seamless version of the video less in length than the length of the video, the playing not requiring an alternate video source and comprising retrieving the selected segments and seamlessly skipping a retrieval of an at least one segment by buffering at least a portion of a segment.

7. The system of claim 6 wherein the segment information is downloaded to the optical disc.

8. The system of claim 6 wherein the video is downloaded to the optical disc from a remote video source.

9. The system of claim 6 wherein the preestablishing is individualized for each of a plurality of viewers and is subject to a password control.

10. The system of claim 6 wherein the preestablishing is individualized for each of a plurality of viewers and is subject to a password control; and wherein the video is downloaded to the optical disc from a remote video source.

11. A video playing method comprising the steps of:

preestablishing a content preference with respect to a level of explicitness in each of plurality of content categories;

downloading, by means of a communication, segment information for a video comprising a linear sequence of frames readable from a spiral track of an optical disc, the segment information directly defining at least one segment of the video with respect to a level of explicitness in at least one content category;

selecting segments of the video by applying the preestablished content preference to the segment information; and

playing, by means of a random accessing and buffering and from within the linear sequence of frames, a seamless version of the video less in length than the length of the video, the playing not requiring an alternate video source and comprising retrieving the selected segments and seamlessly skipping a retrieval of an at least one segment by buffering at least a portion of a segment.

12. The method of claim 11 wherein the segment information is downloaded to the optical disc.

13. The method of claim 11 wherein the video is downloaded to the optical disc from a remote video source.

14. The method of claim 11 wherein the preestablishing is individualized for each of a plurality of viewers and is subject to a password control.

15. The method of claim 11 wherein a modification to the preestablished content preference is responsive to a permission specific with respect to a level of explicitness in each of the plurality of content categories.

16. A video playing method comprising the steps of:

preestablishing a content preference responsive to a rating system;

downloading, by means of a communication, segment information for a video comprising a linear sequence of frames readable from a spiral track of an optical disc, the segment information directly defining at least one segment of the video responsive to the rating system;

selecting segments of the video by applying the preestablished content preference to the segment information; and

playing, by means of a random accessing and buffering and from within the linear sequence of frames, a seamless version of the video less in length than the length of the video, the playing not requiring an alternate video source and comprising retrieving the selected segments and seamlessly skipping a retrieval of an at least one segment by buffering at least a portion of a segment.

17. The method of claim **16** wherein the segment information is downloaded to the optical disc.

18. The method of claim **16** wherein the video is downloaded to the optical disc from a remote video source.

19. The method of claim **16** wherein the preestablishing is individualized for each of a plurality of viewers and is subject to a password control.

20. The method of claim **16** wherein the preestablishing is individualized for each of a plurality of viewers and is subject to a password control; and wherein the video is downloaded to the optical disc from a remote video source.

* * * * *

EXHIBIT B

US005724472A

United States Patent [19]

Abecassis

[11] Patent Number: 5,724,472

[45] Date of Patent: *Mar. 3, 1998

[54] **CONTENT MAP FOR SEAMLESSLY SKIPPING A RETRIEVAL OF A SEGMENT OF A VIDEO**

[76] Inventor: **Max Abecassis**, 19020 NE. 20 Ave., Miami, Fla. 33179

[*] Notice: The term of this patent shall not extend beyond the expiration date of Pat. No. 5,434,678.

[21] Appl. No.: **432,507**

[22] Filed: **May 1, 1995**

Related U.S. Application Data

[62] Division of Ser. No. 832,335, Feb. 7, 1992.

[51] **Int. Cl.**[6] **H04N 5/91**; H04N 9/79

[52] **U.S. Cl.** **386/52**; 386/65

[58] **Field of Search** 358/335, 342, 358/310; 360/33.1, 13, 14.1, 14.2, 14.3, 27; 348/6, 7, 12, 13; 386/83, 46, 52, 55, 92, 4, 1, 125, 106, 45; H04N 5/76, 5/78, 5/91, 5/93

[56] **References Cited**

U.S. PATENT DOCUMENTS

4,569,026	2/1986	Best	364/521
4,605,964	8/1986	Chard	358/147
4,685,003	8/1987	Westland	360/14.1
4,729,044	3/1988	Kiesel	360/14.3
4,775,935	10/1988	Yourich	364/401
4,782,402	11/1988	Kanamaru	358/342
4,872,151	10/1989	Smith	369/14
4,888,796	12/1989	Olivo, Jr.	379/101
4,930,160	5/1990	Vogel	380/23
4,949,187	8/1990	Cohen	358/335
5,057,932	10/1991	Lang	358/335
5,109,482	4/1992	Bohrman	395/154
5,172,111	12/1992	Olivio, Jr.	360/27
5,195,135	3/1993	Palmer	380/20

Primary Examiner—Robert Chevalier

[57] **ABSTRACT**

A variable content video comprising a video and a segment map, the segment map defining a plurality of video segments of the video responsive to at least one preestablished content category, the segment map providing information for a video system to automatically select, retrieve, and transmit as a continuous video, video segments from the plurality of video segments responsive to a preference with respect to the at least one preestablished content category. The content category may be a category of possibly unsuitable content such as violence. The plurality of video segments may comprise parallel segments to provide greater variety in the level of explicitness. In an embodiment the variable content video is stored in a memory device such as a portable laser readable memory.

10 Claims, 6 Drawing Sheets

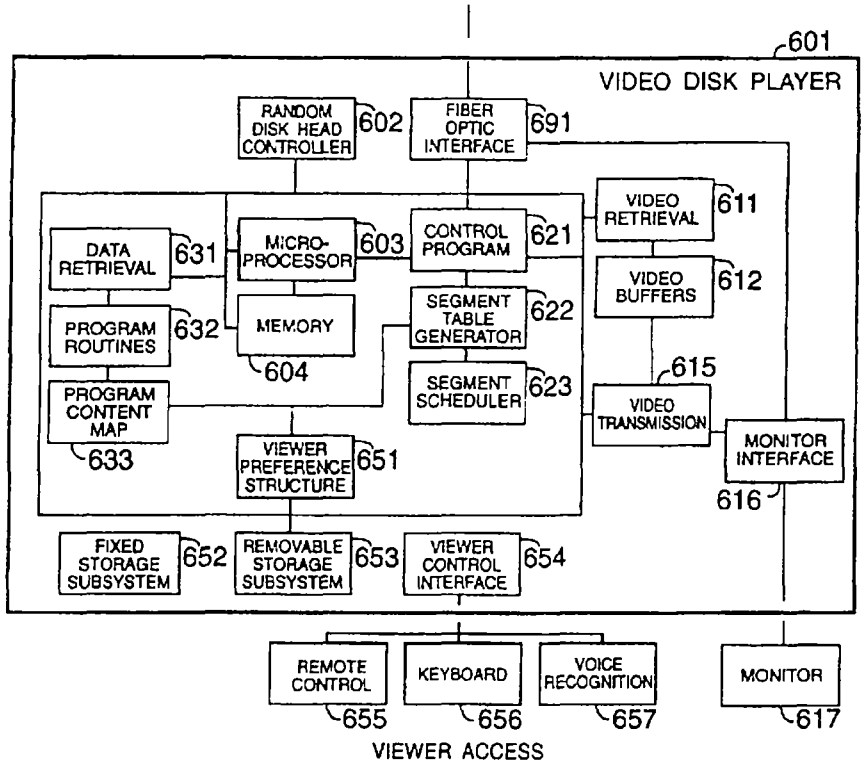

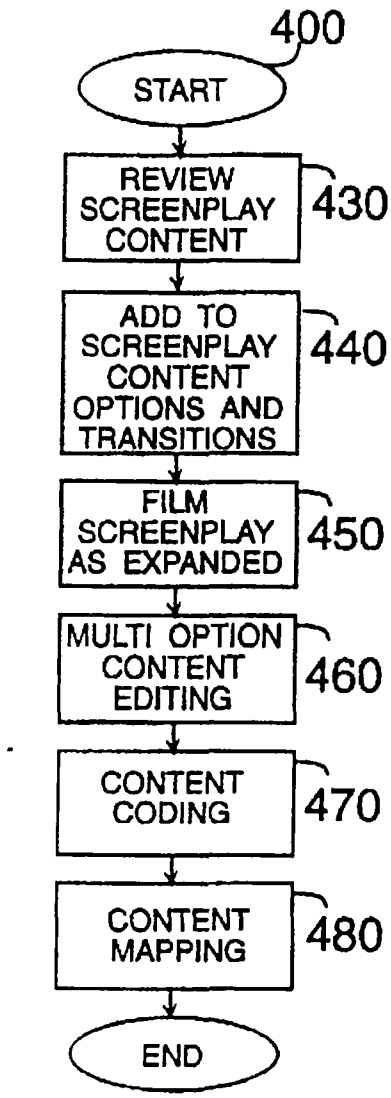
400
START
REVIEW SCREENPLAY CONTENT
430
ADD TO SCREENPLAY CONTENT OPTIONS AND TRANSITIONS
440
FILM SCREENPLAY AS EXPANDED
450
MULTI OPTION CONTENT EDITING
460
CONTENT CODING
470
CONTENT MAPPING
480
END

FIG. 2

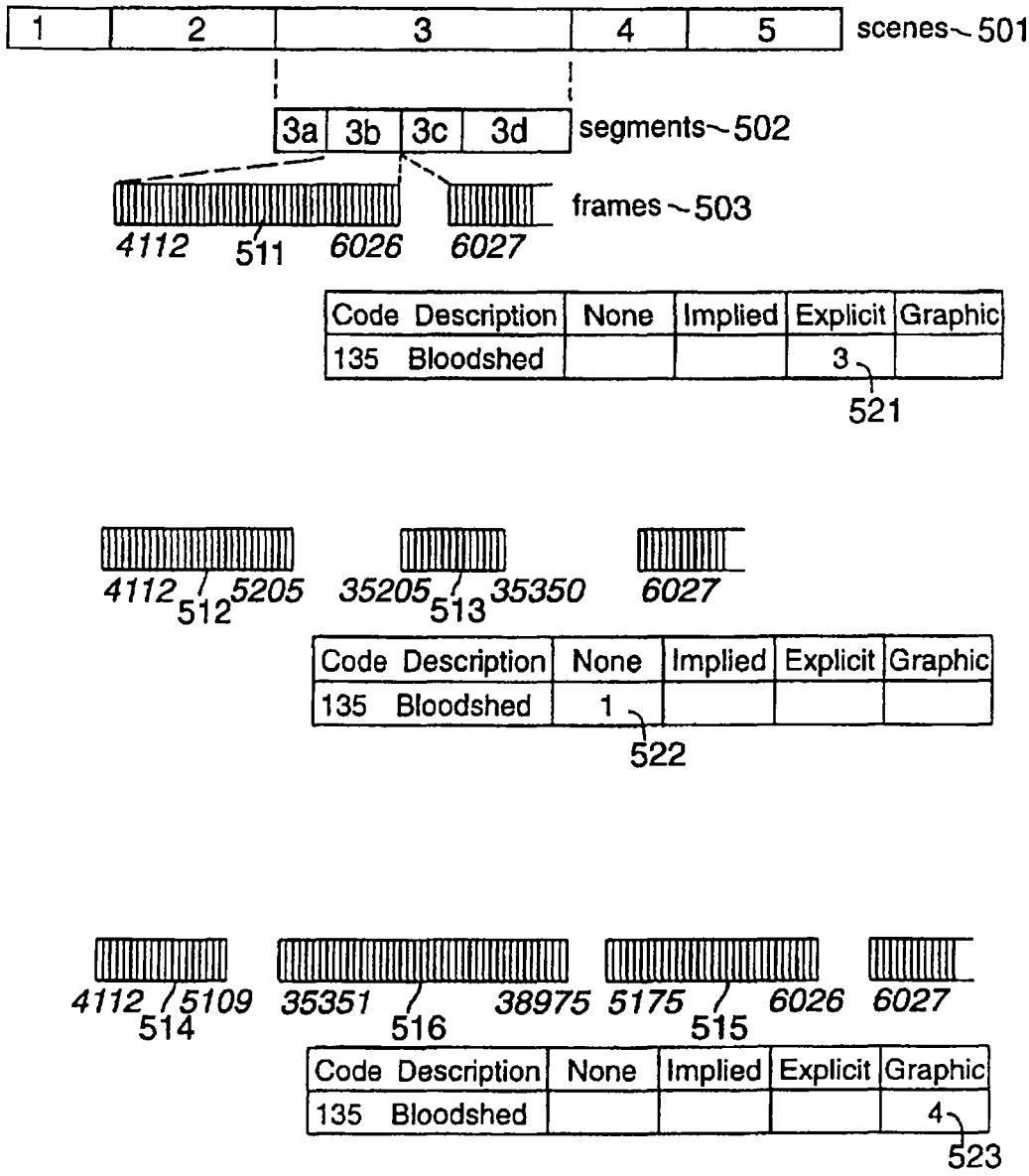
1
2
3
4
5
scenes 501
3a
3b
3c
3d
segments 502
frames 503
4112
511
6026
6027
Code Description
None
Implied
Explicit
Graphic
135 Bloodshed
3
521
4112
5205
512
35205
513
35350
6027
Code Description
None
Implied
Explicit
Graphic
135 Bloodshed
1
522
4112
5109
514
35351
516
38975
5175
515
6026
6027
Code Description
None
Implied
Explicit
Graphic
135 Bloodshed
4
523

FIG. 3

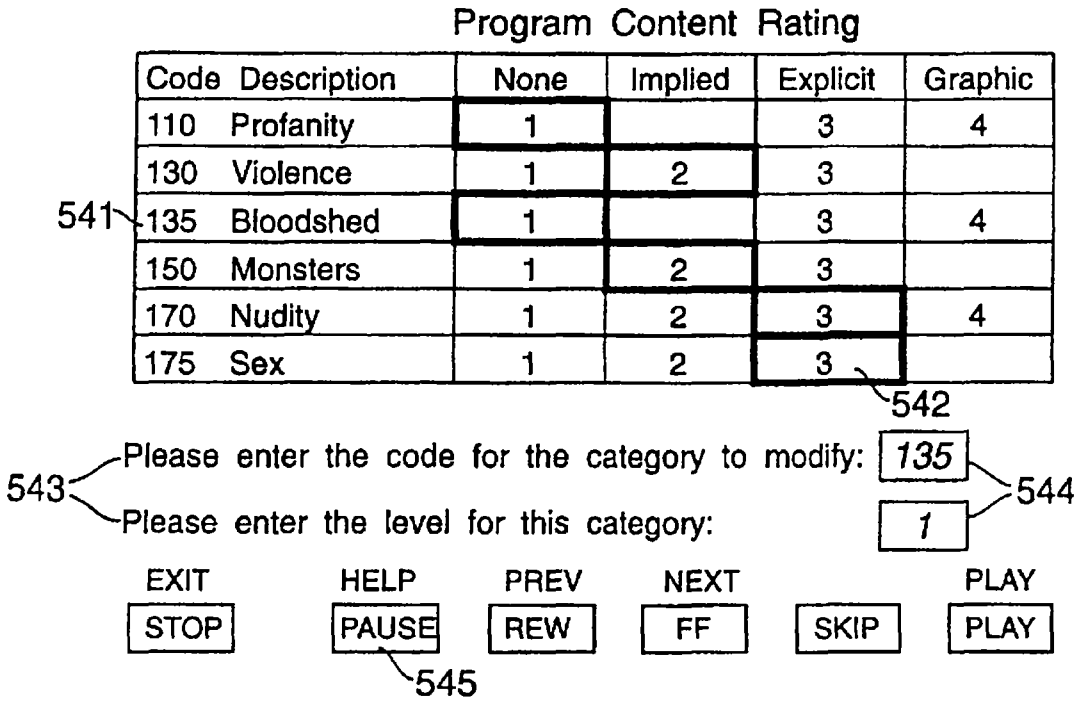
Program Content Rating
Code Description
None
Implied
Explicit
Graphic
110 Profanity
130 Violence
135 Bloodshed
150 Monsters
170 Nudity
175 Sex
541
542
543
Please enter the code for the category to modify:
135
544
Please enter the level for this category:
1
EXIT
STOP
HELP
PAUSE
545
PREV
REW
NEXT
FF
SKIP
PLAY
PLAY

FIG. 4

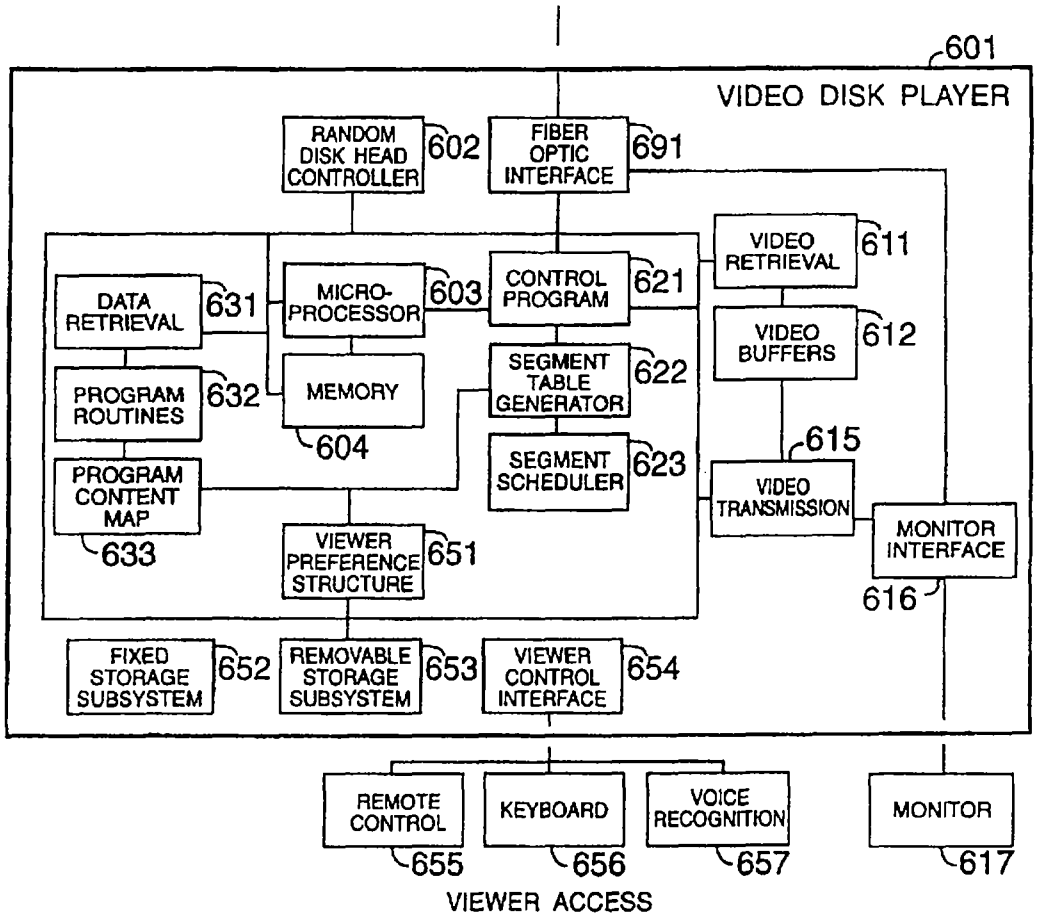
601
VIDEO DISK PLAYER
RANDOM DISK HEAD CONTROLLER
602
FIBER OPTIC INTERFACE
691
VIDEO RETRIEVAL
611
DATA RETRIEVAL
631
MICRO-PROCESSOR
603
CONTROL PROGRAM
621
VIDEO BUFFERS
612
PROGRAM ROUTINES
632
MEMORY
604
SEGMENT TABLE GENERATOR
622
615
PROGRAM CONTENT MAP
633
SEGMENT SCHEDULER
623
VIDEO TRANSMISSION
MONITOR INTERFACE
616
VIEWER PREFERENCE STRUCTURE
651
FIXED STORAGE SUBSYSTEM
652
REMOVABLE STORAGE SUBSYSTEM
653
VIEWER CONTROL INTERFACE
654
REMOTE CONTROL
655
KEYBOARD
656
VOICE RECOGNITION
657
MONITOR
617
VIEWER ACCESS

FIG. 5

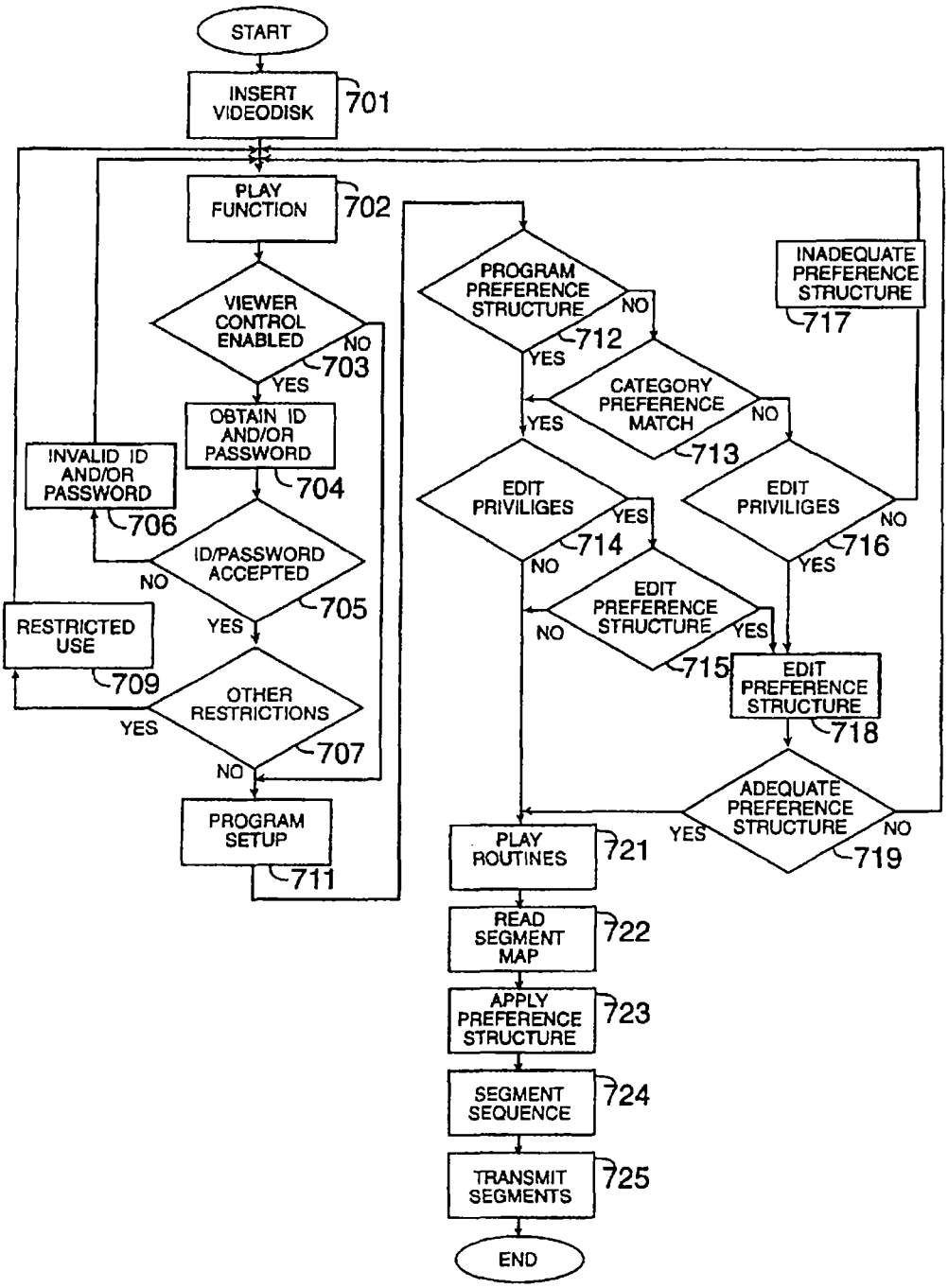
START
INSERT VIDEODISK
701
PLAY FUNCTION
702
VIEWER CONTROL ENABLED
NO
703
YES
OBTAIN ID AND/OR PASSWORD
704
INVALID ID AND/OR PASSWORD
706
ID/PASSWORD ACCEPTED
NO
705
YES
RESTRICTED USE
709
OTHER RESTRICTIONS
YES
707
NO
PROGRAM SETUP
711
PROGRAM PREFERENCE STRUCTURE
NO
712
YES
INADEQUATE PREFERENCE STRUCTURE
717
CATEGORY PREFERENCE MATCH
YES
NO
713
EDIT PRIVILIGES
YES
714
NO
EDIT PREFERENCE STRUCTURE
NO
YES
715
EDIT PRIVILIGES
NO
716
YES
EDIT PREFERENCE STRUCTURE
718
ADEQUATE PREFERENCE STRUCTURE
YES
NO
719
PLAY ROUTINES
721
READ SEGMENT MAP
722
APPLY PREFERENCE STRUCTURE
723
SEGMENT SEQUENCE
724
TRANSMIT SEGMENTS
725
END

FIG. 6

CONTENT MAP FOR SEAMLESSLY SKIPPING A RETRIEVAL OF A SEGMENT OF A VIDEO

This is a division of Ser. No. 07/832,335 filed Feb. 7, 1992.

BACKGROUND OF THE INVENTION

1. Field of the Invention

This invention relates to an automated control system and method that furnishes viewers with individualized automated editing and retrieval capabilities over the contents and length of a variable content video program in order to produce a transparently continuous and complete show. The system capabilities include an automated flexible control system design that enables an operator to selectively apply different editing criteria to the variety of subject matters that may be contained within the program. The system controls also include an automated capability for efficiently previewing program scenes of pre-identified categories and classes of subject matter and a capability for determining their inclusion in the program seen by the viewer.

Finally, the control system provide a keyword/menu segment/program retrieval facility from an existing program and program database, and a requesting capability for programs to be produced according to viewer-specified requirements.

2. Background of the Prior Art

Artistic expression in films often surrender to the requirements of marketing and other forms of censorship, both subtle and obvious. Individual viewers once they elect to view a program, subject themselves to the results of this censorship or lack thereof.

One form of industry censorship is content rating which is a label attributed to each film by the Motion Picture Association of America ("MPAA"). The label serves as a broad generalized guide for the public as to the overall level of "objectionable" content, as the MPAA defines various types of content that may be included in a movie. In the MPAA published booklet "The Voluntary Movie Rating System", the MPAA spells out the purpose of the rating system: "if you are 17 or over, or if you have no children, the rating system has no meaning for you. Ratings are meant for parents, no one else." Accordingly, the rating system used by the MPAA has adopted a generalized structure that has inherent limitations since it admittedly has ignored the varying sensibilities and tastes among different adults e.g. non-parents, young adults, or senior citizens. The rating system is thus inadequate for a large portion of the viewing public. Nonetheless, any reviews that may have been obtained, the public must elect the option of viewing the film or not. Having decided to do so, the viewer, must accept the content of the film in its entirety.

User content requirements may also include the knowledge level required to view the program, its level of detail and complexity such as would be the case in educational programs. In programs that include a number of segments such as is generally the case with news programs, there is no choice provided to the user as to the viewing of only the user specified program segments. Similarly, while the viewer has the option to truncate the length of a program by either terminating viewing the program, or if recorded to fast-forward certain scenes, there is no option of receiving a program at a user specified length.

Presently, all form of viewer editing, such as permitted by the use of a VCR, requires the interactive participation of the viewer and some knowledge as to the location of the scene in question.

Many methods and systems found in the prior art do not incorporated current basic technology and methods to produce an automatic viewer editing capability that produces transparently complete program.

For example, the patent to Von Kohorn, U.S. Pat. No. 4,520,404, discloses a remote recording and editing system. In particular, the invention discloses an editing system whose functions include the activation or deactivation of a television receiver and a recording apparatus by the transmission of control or editing command signals, generated from a central station where an operator monitors a broadcast transmission. The receiver and recorders in a viewer's home are provided with inhibiting circuitry that respond to the transmitted control signals from the central station to prevent the re-broadcast or recording of unwanted material in the home.

The patent to Chard, U.S. Pat. No. 4,605,964, discloses a television controller that utilizes coding for identifying and automatically deleting undesirable sound and visual events broadcast with a program. The content signals associated with Chard also teaches that undesirable events are graded to permit editing according to personal taste.

Also, the patent to Olivo, Jr., U.S. Pat. No. 4,888,796, discloses a screening device capable of automatically disabling the TY or video receiving device in response to the receiver's recognition of a non-interfering material content signal co-transmitted with the program signals.

However, Yon Kohorn, Chard, and Olivo, have various drawbacks. The material content signal may only be applied to portions of a program signal, in order to edit out only the objectionable parts of a program. Thus by disabling the replay of segments of the program material, these methods ignore the fact that dead segments would result from the edited out segments. Also, while Chard suggests setting grading levels independently for sound (four levels) and vision (four levels), it does not teach providing grading levels for a variety of subject matters. Additionally, while Olivo, illustrates incorporating the rating structure provided by the MPAA for the programs, and suggesting that different material content signals can distinguish between different forms of subject matter, it does not teach using a number of different ratings for each class of subject matter. In this regard, Vogel's disclosure of three broad classifications (advertisement, non-program material, restricted) does not enhance Olivo. The above teachings therefore together show a method whose rating structure is based on the MPAA rating system applied to different subject matters. However, as previously discussed, the MPAA rating system was designed and intended as an overall program guide for parents. The MPAA rating system does not by, deliberate design, address segment specific subject matter information that is required to provide adults with a highly discriminatory control over the content of segments contained within the selected program.

The patent to Vogel, U.S. Pat. No. 4,930,160, addresses the above deficiency by providing a facility for displaying alternative material during the dead segments. The alternative material selected during censorship periods can originate from a remote source, for example, another television broadcast, or locally, for example, from a video disk or tape player. The local source may also simply be a black signal generator which essentially reproduces the same drawback noted above. An alternate source to a dead segment may also be provided by the system disclosed in Boyd et al., U.S. Pat. No. 5,023,727. Boyd teaches a method for forming a substantially continuous composite video signal by combining

a video segment received from a video signal with a video segment produced from digital data.

The patent to Lindstrom, U.S. Pat. No. 5,060,068, discloses an optical laser disc based broadcasting method and system wherein promotional segments of a program are played from the same source recordings as the program itself. Lindstrom discloses utilizing at least two disc players in timed synchronization to generate a transparently continuous video signal.

The patent to Kiesel, U.S. Pat. No. 4,729,044, discloses a plurality of video tape recorders that similarly provide for continuous replay without the need for creating a master tape.

Neither Lindstrom nor Kiesel however teach a single player that can provide transparently continuous video signals, nor do these references suggest utilizing a control system that provides a variety of different and complete edited versions of the same program obtained from the same single source recording.

Neither Boyd nor Vogel, however, provide a system that creates, from a single source, a viewer-edited transparently continuous and harmonious program that replaces a dead segment with other parts of the same program.

Generally, to the extent that the above patents act to censor a video program they direct themselves to providing viewer control over the form of the expression. This is in contrast to those patents, that provide viewers the means to participate, and thereby affect, the program's story lines or plot. An example of the latter type of patent is Best, U.S. Pat. No. 4,569,026. Which discloses a video entertainment system where human viewers conduct simulated voice conversations with screen actors or cartoon characters in a branching story game shown on a television screen. Best is further characterized by the interactive nature of viewer participation, since at frequent points in the game the system presents the viewer with two or more alternatives. Is the interactive participation of the viewer that sustains the logical progression of the game. As many games are directed at children, and are educational in nature, or contain primitive subject matter, they have not dealt with issues raised by the more complex adult forms of expression inherent in contemporary films. Games have provided setup editing capabilities (selection of: level of difficulty, character, weapons, etc.), not censoring editing capabilities.

The present art thus fails to suggest combining interactive and set up capabilities, automated editing capabilities, and directing capabilities to provide the user with control over a program's story line, content, and form of expression.

The patent to Freeman, U.S. Pat. No. 4,573,072, discloses a method for expanding interactive CATV displayable choices for a given channel capacity. The preferred embodiment of the invention includes a program segment stacking method and a subscriber profile utilized to transmit one of a plurality of the stacked program segments. The subscriber's selection profile disclosed therein is demographic in character and can be changed from the head end of the transmission, and not editorial and controlled by the viewer. Further, the method of Freeman teaches that the stacked segments beginning at any one moment of time to be of equal duration to restore the transmission to the common prerecorded television message. This structure, which serves Freeman's objectives of tailoring advertising to the demographics of the viewer, is inferior to a variable length stacking structure that would provide far superior tailoring of the program content.

The patent to Bohn, U.S. Pat. No. 4,888,638, shows a market research system for substituting stored television programs for regularly scheduled, broadcast television programs having a particular identification code wherein the substitute television programs may be transmitted via telephone lines to the households of cooperating panelists for storage. The operational difference between Freeman and Bohn is the method of transmitting the alternate advertising segment to the viewer. In Freeman different advertising segments are contemporaneously transmitted during the broadcast of the program, while in Bohn differing advertising segments are transmitted prior to the broadcast of the program. Bohn teaches the use of a laser disc to store the substitute television advertising. Based on the identification code contained in the broadcast program a controller may substitute the broadcasted advertisement.

The patent to Skutta, U.S. Pat. No. 5,055,924, discloses a method for the remote-controlled replacement of a TV advertising spot by another advertising spot for a new product to be tested.

The teachings of the above references would not furnish a system that provides each viewer with automated non-previewed control over the program content from a single program source by a single device that generates a transparently seamless program matching the viewers pre-established content requirements. Among the additional elements and enhancements required by such a system would be producing and providing coherent parallel and overlapping program segments. Some of these parallel segments differ only in the form of expression (i.e. explicitness) of a given scene.

The patent to Hashimoto, U.S. Pat. No. 4,745,549, discloses a method of generating an individualized listing of programs that meet an individual viewers stated program preferences. This is accomplished on the basis of a generalized survey of a viewers program classification preferences and viewer response to the list selected.

The patent to Hallenbeck, U.S. Pat. No. 5,038,211, relates to television (TV) program schedule guides and in particular to a method and apparatus for efficiently transmitting, receiving and storing television program schedule information. In Hallenbeck, schedule information is retained that meets predetermined selection criteria to minimize storage and processing requirements.

The above patents do not suggest viewer direct selection of a program from a variety of programs by means of a database architecture that would permit keyword and interactive menu searches.

The patent to Monslow, U.S. Pat. No. 4,995,078, teaches a television broadcast system using land lines for the real time transmission of a viewer chosen program. The patent to Way, U.S. Pat. No. 4,891,694, is entitled "Fiber optic cable television distribution system". The patent to Walter, U.S. Pat. No. 4,506,387, discloses a programming on demand fiber optic based system. These patents together with the references cited therein teach a variety of land line and fiber optic transmission of programs with varying degrees of viewer capabilities in the selection of programs. While these do not teach transmission of a variable content program, said works are, incorporated by reference herein to establish that such a transmission is possible and to assist the reader interested in obtaining a more detailed disclosure of the hardware of such systems than is necessary to provide here.

SUMMARY OF THE INVENTION

In view of the foregoing shortcomings of the prior art, it is evident that there exists a need for a system that furnishes viewers with individualized automated non-previewed con-

trol over a program's content in a single program source, and broadcast on a viewing device, by a transmitting device that generates a transparently seamless video program matching the viewers preestablished content requirements.

It is also an object of the present invention to include the capabilities for automatically selecting among parallel and overlapping segments to provide a video program that is highly responsive to viewer control over its content. A further object of the invention is to provide content control that includes any of the following: the program's form of expression, subject matter, element development, expertise level, detail level, and program length.

It is yet another object of the invention to provide a TV control system where the control is exercised automatically, by means of a preestablished content preference structure and keyword subject listing, individualized for each viewer and subject to password control by a system administrator. This first form of control is applied universally to each selected program content map. Each map contains detailed information as to the location and program characteristics, such as categories and subject matter, of the various segments of the program. The second form of control may be established interactively and individually with each selected program prior to initiating viewing.

It is also an object of the present invention to provide the capability for efficiently previewing selected scenes in order to indicate their inclusion for viewing. Inclusion/exclusion control is automatically accomplished by modification of the program content map as may be required for example by a parent editing a children's program. Additionally, the viewer accessible copy of the program's content map may be modified contemporaneously with the viewing of the program, generating a variety of any one of the following preselected automated system responses: updating the copy of the program's content map, skipping to the next logical segment, or any combination of the two. The skipping to the next logical segment feature may be accessed independently without affecting the content map.

It is also an object of the present invention to provide automated capabilities to efficiently view only a specified class, category, or subject matter included in segments within the selected program or programs.

It is also an object of the invention, to provide information as to the viewer preference structure and the program content map to which it was applied to assist in determining viewer preferences.

It is also an object of the present invention to provide viewers the means of accessing available programs, segments from a program, and or segments from a plurality of programs by the use of keyword or a classification tree structure as would be required by a user accessing a very large program or segment database.

It is also an object of the present invention to provide the means for a viewer to detail the subject matter, story line, and or general content of a desired program so that producers of programs may elect to produce and provide said program.

Briefly these and other objects of the invention are accomplished by a system comprising: program production, editing, and recording techniques, assignment to segments of a program the appropriate descriptors and creating a map of those segments and their descriptors, a structure to record the viewer's content preferences, the means by which the user content preference structure is matched to the programs's content map to produce the desired program, means of accessing and retrieving programs, and means of indicating program preferences.

With these and other features, advantages and objects of this invention, the invention is shown in the detailed description of the invention and in the accompanying drawings and appended claims.

BRIEF DESCRIPTION OF THE DRAWINGS

FIG. 1A is a video segment rating chart for subject matter as per the present invention;

FIG. 1B is video segment rating chart for elements as per the present invention;

FIG. 1C is a video segment rating chart for inclusion as per the present invention;

FIG. 2 is a schematic diagram representing the steps of producing a variable content program of the present invention;

FIG. 3 is a set of diagrams and rating chart of three versions of a video segment, each a variation of the other as per the present invention;

FIG. 4 is a sample viewer scene selection screen of a program's content rating as per the present invention;

FIG. 5 is a schematic diagram of the video disk player as per the present invention; and

FIG. 6 is a flow chart summarizing the process of a laser videodisc playing as per the present invention.

DETAILED DESCRIPTION OF THE PREFERRED EMBODIMENTS

As used herein segments refers to a sequence of frames. The segment or frame sequence may form a single image, a shot, a scene, or a sequence of scenes. Any number of segments that may comprise a program may be logically organized by means of the programs segment map. Program refers herein to any image displayed on any device including but not limited to televisions, CRT, film screens; and transmitted to the device by any number of means including but not limited to broadcast, cable, telephone, fiber optic network, tape, videodisc, magnetic media, memory devices, chips and modules.

Referring now in detail to the drawings wherein like parts are designated by like reference numerals, throughout, FIG. 1A illustrates an example of the generalized rating structure **100** utilized to review the contents of each segment contained in a given program. The structure of chart **100** includes a number of categories **102** that might apply to most films. The generalized rating scale **104** mirrors the rating system utilized by the Motion Picture Association of America (General Audiences,Parental Guidance Suggested, Parents Strongly cautioned, Restricted, No Children Under 17 Admitted, G,PG,PG-13,R,NC-17 respectively), but provides a more descriptive rating scale for the group, as shown. Each number in the matrix **106** in the chart **100** represents the particular scene rating choices for a specific scene or segment. A more individualized rating scale for each of the categories is also available as will be described below with respect to FIG. 1C.

Referring now to FIG. 1B, the contents of a segment may be further represented by chart **200** in order to analyze the development of a number of elements **202** such as character, location, and time, as well as the degree of detail **204** and the level of expertise **206** that may be appropriate for a program. These elements are provided at a variety of levels and are rated accordingly. FIG. 1B for example indicates that the program's character element development may range from none to extensive.

Referring to FIG. 1C, a separate category **300** provides criteria for condensed versions of the program. In this chart,

the segments may be classified according to the level of inclusion/exclusion that the user may desire **302**. The ratings indicates if the segment is required for a highlight, summary, condensed, or detailed versions **304** of the program. In a similar manner, an individualized tailored and descriptive rating scale may be provided for any one category or group of categories.

In a preferred embodiment, each segment is analyzed as to subject matter and assigned the necessary keyword to provide effective keyword retrieval and additional user viewing control capabilities. This will be of significant value in retrieving video segments from a program database ("programbase"), such as may be constructed from a collection of news or educational programs, where each program comprises a number of segments each a whole in itself.

Keyword indexing of the segments provides the capability for inhibiting the viewing of undesirable subject matter, or assisting in the retrieval of desirable subject matter, where the rating structure may not adequately cover a specified category or subject matter. For example, a viewer may not desire viewing scenes of a flag burning. Key word control would inhibit the segments containing that scene or scenes from being viewed by that particular viewer. Alternatively, a key word search would permit a system user to efficiently retrieve all flag burning segments that may be included in the programbase.

FIGS. 1A, 1B, 1C are examples of an overall framework for segment analysis, the actual structure and complexity utilized may be highly tailored, as disclosed in conjunction with FIG. 1C, by the producer of a program to reflect the specific content of a program without being limited by the structures which may be found to be commonly utilized in other works. Each program producer is offered the flexibility within the overall architecture of this rating system to determine and include only those categories that may be relevant to a particular program, and to add categories as the producer requires. Similarly, the producer is offered some flexibility in determining the labelling of the rating scale.

Meeting the objectives of being able to provide both a standardized set of rating structures that will permit the automatic application of a viewers preestablished preference structure on a variety of programs, and provide the producer of the program the flexibility described above, are accomplished by assigning unique classification codes to each set of preestablished standardized categories and by reserving a range of classification codes that will be recognized by the system as requiring interactive input by the viewer. In the example of FIGS. 1A, 1B, 1C, codes ending in 9, codes with a tens digit being a 9, and or codes from 900 to 999 ("producer code") are reserved as independent of the standard categories shown.

Producer codes would signal the system to elicit the viewer preference. Similarly, as the rating scale is relative in structure, different descriptions for any category rating scale might be utilized without affecting the applicability of a preestablished viewer preference structure for that category. In instances where the rating scale is not accommodated by the standardized structure supplied, the producer need only assign a producer code and build whatever scale he may deem desirable, from a simple "Yes/No" to a sophisticated three dimensional representation.

Additionally, commands may be issued by the program to inhibit the application of a preestablished viewer preference structure and require the viewer to address the program's segment rating structure regardless of the category codes utilized.

Referring to FIG. **2**, in the preferred embodiment of the present invention a view of the method for mapping the scenes **400** is provided. Each scene or fragment of a scene on a video script is reviewed **430** according to a producer-selected segment rating structure, as indicated in FIGS. 1A–1C above. The screenwriter now has the freedom to expand the scenes to cover a wider rating range without the concern for the limitations inherent in the present art. Without the artificial limitations that a program fit a specified time frame, the screenwriter may additionally expand scenes to provide whatever level of detail or development they may desire. Additionally, the screenwriter may elect to provide any number of scene options and or transitions to each of the scenes identified **340**.

Most scenes can be constructed by means of transition segments to provide for content at varying points of the grading scale and or the avoidance of a particular segment and yet retain harmony with the preceding and following segments. It should be noted that any given idea or scene may be expressed in a variety of forms, whether implied as in the closing of a bedroom door, to the graphic treatment as might be found in an "X" rated film. Both of these versions may be provided as parallel segments in a program, challenging the artist to create greater variety in the form of expression permitting the viewer to decide for themselves the level of censorship that they may desire.

A successful filming of this architecture **450** is a function of the skill of the director(s), actors, animators, etc. that may be required to provide for parallel and transition segments with the required transparent harmony.

Existing program editing requires producing a unique linear sequence of segments. The editing of the present invention **460** requires a parallel non-sequential logical arrangements of segments. It should be emphasized that the art of program editing under the present invention transfers censorship and time constrained editing decision making from the producer to the viewer.

The beginning frame and end frame in each of the relevant segments is identified, the segment content is assigned a descriptor as per the category and rating structure, and logical entry and exit references are assigned **470**. Any given segment may be assigned a variety of category codes and keywords ("category codes"), and the segment assigned a category code may be congruent in one or more frames with a segment assigned a different category code. Where necessary, a video segment may be associated with more than one audio segment and corresponding separate voice and video category codes may be provided. The complexity of the arrangement is only limited by the requirements, desires, skill, intelligence, hardware, and software available to the program editor.

The resulting segment information is mapped and the required user interface produced **480** to permit the viewer, by selecting the desired rating level in each of the categories, to view a unique continuous sequence of segments consistent with the designated viewer preference structure.

Programs which have been already produced would not offer the same parallel and transition segments, and other opportunities, available to programs produced under this system. A program may, however, nonetheless be mapped to provide an editing-out capability to produce, if not entirely transparently, a continuous program.

To further explain the methods of the present invention, and referring to FIG. **3**, and consistent with definitions established at the outset, illustrated is a program consisting of five scenes **501**, each scene of the program may comprise

any number of segments **502**. each segment may include any number of frames **503**. In this example, scene three includes four segments, segment 3b begins at frame **4112** and ends at frame **6026**. The next segment. 3c, begins at frame **6027**. Brakes between set of frames serve to illustrate the beginning and ends of a segment and not to indicate a non-continuous transmission.

Segment *3b* of scene three **511**, which might generate an "R" rating for an entire program, includes frames depicting explicit bloodshed. In this example the rating of the segment is indicated by the numeral 3 in the appropriate cell **521** of that segments rating chart.

To provide for the option of editing-out the explicit bloodshed, the program content map includes an additional segment definition beginning at frame **4112** and ending at frame **5205**. The end of this segment **512** is linked to a new transitional segment **513** beginning at frame **35205** and ending at **35350**, the end of which is linked to frame **6027**. In this fashion, frames are omitted and added to provide a continuous transparent edited version of segment *3b*. This frame sequence is associated with the corresponding segment content rating to indicate the absence of bloodshed **522**. In all other respects the segments **512/513** is equivalent to the original segment **511**. For programs produced prior to the present invention, the editing-out would work in a like manner except that the transitional segment **513** would not be available to make the continuous transmission from frame **5206** to **6027** transparent.

To provide for the option to include a graphic level of bloodshed, the program content map includes an additional segment definition. In this case, only 66 frames of the "original" segment **511** are deleted to accommodate the graphic bloodshed included in segment **516** beginning at frame **35351** and ending at frame **38975**. This frame sequence (**514** to **516** to **515**) is associated with the appropriate segment content rating **523**.

In this manner, parallel and transitional segments provide a rating selection mix ranging from a segment excluding bloodshed **522** to a segment including graphic bloodshed **523**, as well as the segment including explicit bloodshed. As a result, the particular scene of which these segments are a part may be viewed at any of the three rating levels.

A scene may include subject matter of more than one category. In such cases overlapping segments and transitional segments may be provided to permit viewing of one subject matter at one rating level and viewing of another subject matter at another level. For example, barroom brawl of the first westerns were violent but devoid of bloodshed. A current "R" program may result from the contents of twenty or more segments, which would generate forty to *sixty additional parallel and transitional segments.*

FIG. **4** illustrates a program's content rating chart. This chart merges each of the segment's content ratings of the program for each category. For example, the category bloodshed indicates options to omit the viewing of bloodshed in the program or include explicit or graphic segments **541**. Depicted by bold boxes is the viewer selected level for each category **542**. The viewer in this case has elected to omit bloodshed in his/her viewing of the program. Each of the viewer's selections may modify or automatically add to the viewer preference structure that is internally saved by the system and applied to other programs that include the same category codes.

The software routines that elicit viewer preference may be as conceptually simple as that illustrated in FIG. **4**. A screen display of the program's categories and the optional rating levels and the appropriate viewer selection requests **543**. The viewer indicates the category and desired viewing level by depressing a numeric key on the player's remote control unit **544**. Indicated on the screen is the function in this context of the control unit command keys. In this illustration, depressing the "Pause" key **545** will cause the display of context sensitive "Help" screens. Context sensitive functions and label of the keys of the control unit enhances the level of communication of the limited number of control keys.

In simplified terms, any segments with a rating higher (abstract) than the viewer-selected rating for a given category would not be included in the program produced for the viewer. The segment selected for viewing (a rating level equal to or next lowest rating) provides the next segment beginning frame information. This will skip over parallel segments of a lower rating than the viewed segment.

As indicated at the outset, the architecture of the system is intended to be hardware independent. That is, a variety of hardware, firmware, and software architectures are possible in the implementation of the present invention. An example of such an implementation of an aspect of the present invention relies on the use of existing laser video disk random access technology to provide the basic apparatus to transmit video information from a single video disk source to a television. The technology supporting a video disk implementation is well established in the art, in fact the hardware required and its operation mirrors that extensively disclosed in the patent to Best (cited previously) and by reference incorporated herein. Therefore, reviewed here and illustrated in FIG. **5** are only those elements of particular interest to the present invention.

Referring now to FIG. **5**, the video disk player of the present invention enhances existing readily available video disk player unit **601** and random access technology **602** by including video buffers **612** of sufficient size to permit random positioning of the head (measured in microseconds) to retrieve subsequent frame information from the videodisc without altering the transmission of the required frames per second to provide a transparently continuous video signal transmission to the monitor.

In addition, the video disk player includes a number of computing elements readily available in personal computers to add data retrieval and processing capability. These capabilities permit the control programs to manage the logical retrieval of data and video information. The control program **621**, installed in firmware or memory, utilizes micro processor **603** and resident memory **604** to manage the random disk head controller **602** in the retrieval of data **631** and video information **611**.

Upon a "play" command, the control program causes the retrieval **631** of the program specific routines **632**, and program content map **633** from the video/data disk. The disk contains the map of the program segments, any user interface routines particular to the program, and player control codes, in a format similar to that required by the actual program contained therein. Where the player and the disk include write capabilities, whether in a format similar to the program information or supplementary, as is for example provided by the magnetic architecture disclosed in the patent to Smith, U.S. Pat. No. 4,872,151 incorporated herein by reference, the control program **621** may store in the disk the viewer content preference structure **651** as it relates to the video program contained therein. The control program's storage of user specific information on a video disk is conceptually similar to the storage of user information in game cartridges.

programs and the categories **716**. If no edit privileges are available, then the processor transmits an error message **717** to the television and returns the player to a state prior to the viewer play request **702**. If edit privileges are available, then editing of the viewer preference structure is available at step **718**.

Editing the viewer preference structure at **718** is supervised by the processor to insure that viewer modifications are consistent with the permissions established for that viewer. Individual viewer permissions may be established broadly for any one or more classes of programs or categories, or specifically for any category.

Once editing of the preference structure, as required by the program category listing, is found complete at step **719** the processor initiates play routines **721**. These include reading the program segment map **722** from the disk and applying the existing viewer preference structure **723** to determine the segments to be played and their sequence **724**. Upon which the processor issues the sequence of player commands to operate the transfer of the video information from the disk to the television **725**.

It should be noted that once a basic viewer preference structure and keyword control has been read into the player's memory, and the player viewer control is properly set up, a subsequent playing of any disk conforming to the basic category structure, need only involve inserting the disk into the player and depressing the play button, whereupon the player will automatically initiate playing of the video program without the necessity of any further viewer interaction. If viewer control is enabled, a viewer identification and or password entry would be the only other additional step required.

While an embodiment of the present invention has been explained in terms of a laser video disk player physically accessible by the viewer, variations of this embodiment of the present invention are also possible. For example, the video player need not be physically located near the television set. The patents to Fenwick et al. U.S. Pat. No. 4,947,244 and to Eggers et al. U.S. Pat. No. 4,920,432, by reference incorporated herein, disclose remote video distribution systems such as may be found in a hotel, wherein the viewer is provided remote controlled access to the video resources. Fiber optic communications would easily permit a greater distance between the player and the television.

The embodiment of the present invention also need not be limited by laser video disk technology. The program, the program content map, and user routines may be provided to the viewer in any of a variety of existing and evolving technologies. These technologies include hard formats such as tape, laser disk, magnetic disk, combination laser one side magnetic underside disk, memory chips and modules (e.g. RAM, DRAM, high capacity flash memory, bubble memory); and soft formats, such as an analog or digital cable transmissions, fiber optic transmission, phone and satellite communications.

Additionally, the entire program including all the parallel, overlapping, and transitional segments, and the program content map need not be transmitted to the viewer. The program may be provided to the viewer in the form that results from the execution of the viewer content preference structure, i.e only those segments comprising a continuous logical program that are consistent with the viewer preference structure is transmitted in real-time or a non real-time format.

In a fiber optic based broadband integrated services digital network ("B-ISDN") implementation of the present invention, as previously outlined, the video program is delivered to the viewer via a fiber optic network.

An internal or external modem connects the video player with the required fiber optic linkages and communication software. The capacity, and speed of the player's storage, the size and speed of the player's memory and processor, and the capabilities of the modem device or integrated service digital network retriever transmitter ("ISRT") or video retriever transmitter ("VRT") are dependent on the architecture implemented by the program provider. Preferably, where the entire program is downloaded together with the required program content map and user interface, the storage capacity and transfer rates included in the VRT will be significant.

This requirement may be reduced by applying the viewer preference structure to the program and transmitting, in total or in Groups, only those segments to be viewed. Alternatively, where the viewer remains on-line with the program provider during the transmission of the program and utilizes the hardware capabilities of the service provider, a VRT; including only a communication unit without local storage, processing, or memory, would be adequate.

It is within these VRT implementations that the various advantages and capabilities of the present invention are realized. The versatility and usefulness is derived from its two way fiber optic digital linkage to the B-ISDN. In a preferred embodiment of the present invention within a VRT architecture, the viewer or, more appropriately, the user's control of the VRT is either through an infrared control keypad, wired or infrared alphanumeric control keyboard, voice control, or system controls directly on the VRT unit. The VRT will be linked to the user designated digital receiver monitor and to the B-ISDN by means of fiber optic based communication devices. The VRT, monitor and keyboard will provide the functional equivalent of a Graphical workstation.

In operation, the VRT normally provides a variety of communication and background services (e.g. videophone, video fax, security, appliance management) to the user and therefore is ready to respond to an active user request. The user control's the VRT's functions by means of one of the control devices listed above, causing the VRT to provide power to the receiver if necessary, and transmitting an appropriate menu, entry screens, or services to the receiver as previously described. The configuration of the handshaking is provided in a flexible and user configureable manner.

The following four examples describe how a user retrieves video programs:

In a first example, a user accesses, by means of the VRT, a program provider of his choice. The user has a variety of ways to retrieve programs including: i) specifying the program's title or code obtained from a reference guide, ii) listing in alphabetical order by title, subject matter, actors, etc. in any combination, iii) tree structure of the program classifications, and iv) keyword searching and retrieval (similar to the Automated Patent Search implementation) enhanced by the program/segments descriptors. Once the program is selected, the user remains on-line utilizing the hardware of the program provider or a more local service center which obtains the program from the program provider. The off-site hardware services will respond to the VRT commands in a manner similar to that detailed previously for the player implementation of the present invention.

In a second example, a user will access a program provider and select a program, as indicated in the example above. Instead of remaining on-line, however, the user

requests downloading the selected program. In addition to the program video, the program includes a map of the program segments, any user interface routines particular to the program, and VRT control codes, in a format consistent to that required by the VRT storage capabilities. Utilization of the program will then be analogous to those steps detailed previously for the player implementation of the present invention.

In a third example, a user wishing to retrieve a summary, analysis, and background regarding a particular news event, will use one of the control devices to order the automatic linkage with the B-ISDN service center. The user then enters his/her request, and a keyword analysis of the request will then result in an on-line linkage through the service center to a database containing information on the programbases for the subject matter desired. In this example, a news source remotely located will download a listing of the various sources of summary, analysis, background information, the corresponding segment descriptors where available and necessary, and the overall lengths and costs, if any, of each segment. The user may at his/her leisure produce a request for a video program for his own viewing. In this example, a program comprising a 10 min summary from a news source, a 5 min analysis from another service, a 10 min analysis from a private source, a 30 minute lecture from a university, and copies of a relevant data from the Library of Congress are available.

Once the user finalizes the program segment choices, the request is transmitted to the service center wherein the various providers (libraries) which may be located anywhere in the world are electronically requested to transmit the respective segments/programs, program content maps, and any user routines. These are logically assembled and merged by the service center and retransmitted to the user together with any billing information. The transmission and retransmission of the programs might be on a non real-time compressed digitized device.

The event duration for our example may be 15 minutes of connect time, 2 minutes of transmission time (for the 55 minute "program"). The costs for the service may be less than a conventional movie, total cost could be approximately $6.00 with a partial rebate for the user selection to activate the five minutes of targeted "commercials" that are included. The particular billing methods and apparatus required are currently implemented in other on-line data retrieval services.

Since the VRT is both a retriever and a transmitter, the above "program" might be condensed by the user into a 10 minute summary and a 2 minute personal message and transmitted to another user, incurring connect time and redistribution charges of about $2.00.

In a fourth example, a user may construct a content preference structure of any desired detail, including, for example, a variety of keywords to describe the program's subject matter, the story line, possible endings, and approximate program playing time. The user will transmit this information by means of the VRT to a program provider. The user will further indicate the program's delivery by requirement (minutes, overnight, days), and whether the request is for a single program or a series of programs and their frequency.

The program provider will analyze the user request, search the programbase for a program matching the user's requirements. If the program is found, then program information and billing, if any, are transmitted to the user for approval and subsequent program transmission to the user. If the program is not found, the user's request is forwarded to an appropriate program producer for possible production. The "custom" programs generally follow a preestablished pertransmitted viewable minute fee structure based on the subject matter and nature of the program. Although other schemes are possible, production will depend on an expected or actual critical mass of viewers and any sponsorship both public and private that may be associated with the program. The systems communication architecture facilitates the communication and marketing required to obtain the necessary viewers and sponsorship for production.

The variety of uses of such an architecture might include: i) science fiction enthusiast causing video production of a particular story, i.e a 21st century version of "Romeo and Juliet"; ii) the desirability and structure of a sequel determined by the consensus of viewers; iii) updating of news stories no longer deemed "current"; iv) Continued appraisal of developments in a specified field or subject area, i.e. significant events which might affect the price of a specified commodity; v) review of a political candidates positions; and vi) product purchasing and utilization information.

It is clearly the intent of the VRT implementation of the present invention to permit user(s) to efficiently obtain a transparently continuous program to be viewed at the time of their choosing, over which they exercise complete control as to the subject matter, form of expression, and other elements comprising the program.

In terms of product and services advertising, and commercials in general, the applicant recognizes that commercials have made possible the growth and development of freely broadcast programming. The variety of viewer supported programming such as PBS, rented video programs, and premium cable channels have struggled to maintain quality programming and remain generally free of commercials by direct viewer payments and contributions. It is intended that the methods of the present invention, that are applied to programming in general, and to commercials in particular, lead to commercials (informationals) of greater value to the viewer and not necessarily to merely censor or exclude commercials.

As alluded to earlier, a viewer may not object to, and in fact may request, the inclusion of commercials, which are informational in nature, presented in a manner consistent with their taste level, for a product or service in which they may have an interest; especially if the acceptance for viewing of such a commercial will additionally reduce the cost of other programming obtained by the viewers. In this context, the subsidizing of a program's cost to the viewer by commercials, is more closely matched to the viewers interest in the subject of the commercial, and to the potential purchase by the viewer of that product or service.

Where the inclusion of commercials is consistent with the viewer-established preference structure and is accepted by the viewer as a condition of value received by the viewer, the transmission of the commercial to the television is promoted by providing special segment codes that would inhibit the player or VRT functions (e.g. viewer preference structure, skip function) from interfering with that transmission.

While a presently preferred form of the present invention has been set forth in summary form here and above, it is to be understood that the invention is not limited thereby. In particular, the steps of the inventive process are interchangeable, may be interchanged and are equivalent. It is to be understood that the specific details shown are merely illustrative and that the invention may be carried out in other

ways without departing from the true spirit and scope of the following claims.

What is claimed is:

1. A content map comprising:

a plurality of segment definitions defining a plurality of segments of a video responsive to an at least one preestablished content category;

a descriptor associated with at least one of the segment definitions responsive to said at least one preestablished content category; and

a linkage of said plurality of segment definitions for enabling a video player, responsive to a preference with respect to said at least one preestablished content category and by means of a buffering, to seamlessly skip a retrieval of an at least one segment of said video, said video being provided by a single source, and thereby play from said single source a seamless version of said video differing in length than the length of said video.

2. The content map of claim 1, wherein said plurality of segments of said video comprise a non-sequential segment.

3. A content map comprising:

defining and linking means for defining and linking a plurality of segments of a video responsive to a preestablished content rating;

descriptor means for describing the contents of an at least one of said plurality of segments responsive to said preestablished content rating; and

said defining and linking means enabling a video player, responsive to a preference with respect to said content rating and by means of a buffering, to seamlessly skip a retrieval of an at least one segment of said video, said video being provided by a single source, and thereby play from said single source a seamless version of said video differing in length than the length of said video.

4. The content map of claim 3, wherein said video comprises a non-sequential segment, and wherein said single source providing said video is a laser readable disc.

5. A method of producing a content map comprising the steps of:

producing a plurality of segment definitions defining a plurality of segments of a video responsive to an at least one preestablished content category;

associating a descriptor with at least one of the segment definitions responsive to said at least one preestablished content category; and

linking said plurality of segment definitions for enabling a video player, responsive to a preference with respect to said at least one preestablished content category and by means of a buffering, to seamlessly skip a retrieval of an at least one segment of said video, said video being provided by a single source, and thereby play from said single source a seamless version of said video differing in length than the length of said video.

6. The method of claim 5, wherein said plurality of segments of said video comprise a non-sequential segment.

7. A content map comprising:

a plurality of segment definitions defining a plurality of segments of a video responsive to a preestablished content rating;

a label associated with said plurality of segment definitions responsive to said preestablished content rating; and

a linkage of said plurality of segment definitions for enabling a video player, responsive to a preference with respect to said preestablished content rating and by means of a buffering, to seamlessly skip a retrieval of an at least one segment of said video, said video being provided by a single source, and thereby play from said single source a seamless version of said video differing in length than the length of said video.

8. The content map of claim 7, wherein said video comprises a non-sequential segment.

9. A memory device storing a video and at least one content map, said content map comprising:

defining and linking means for defining and linking a plurality of segment of said video responsive to a preestablished content rating;

labeling means, responsive to said preestablished content rating, for labeling said content map; and

said defining and linking means enabling a video player, responsive to a preference with respect to said preestablished content rating and by means of a buffering, to seamlessly skip a retrieval of an at least one segment of said video, said video being provided by said memory device, and thereby play from said memory device a seamless version of said video differing in length than the length of said video.

10. The memory device of claim 9, wherein said video comprises a non-sequential segment, and wherein said memory device is a laser readable disc.

* * * * *

EXHIBIT C

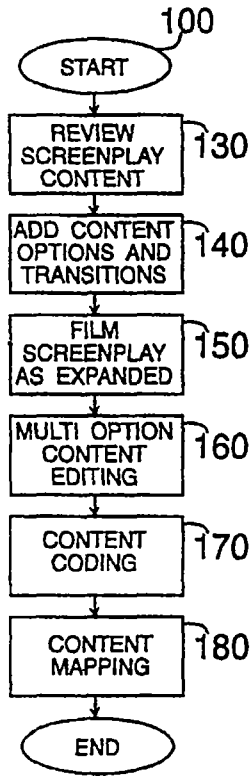
100
START
REVIEW SCREENPLAY CONTENT
130
ADD CONTENT OPTIONS AND TRANSITIONS
140
FILM SCREENPLAY AS EXPANDED
150
MULTI OPTION CONTENT EDITING
160
CONTENT CODING
170
CONTENT MAPPING
180
END

FIG. 1

US005434678A

United States Patent [19]

Abecassis

[11] Patent Number: 5,434,678

[45] Date of Patent: Jul. 18, 1995

[54] SEAMLESS TRANSMISSION OF NON-SEQUENTIAL VIDEO SEGMENTS

[76] Inventor: Max Abecassis, 19020 NE. 20 Ave., Miami, Fla. 33179

[21] Appl. No.: 2,998

[22] Filed: Jan. 11, 1993

[51] Int. Cl.[6] H04N 5/781

[52] U.S. Cl. 358/342; 358/335; 358/311

[58] Field of Search 358/342, 335, 310, 311; 360/13; 348/7, 8

[56] References Cited

U.S. PATENT DOCUMENTS

4,449,198	5/1984	Kroon et al.	364/908
4,506,387	3/1985	Walter	455/612
4,520,404	5/1985	Von Kohorn	358/335
4,569,026	2/1986	Best	364/521
4,605,964	8/1986	Chard	358/142
4,744,070	5/1988	Takemura et al.	369/44
4,775,935	10/1988	Yourick	364/401
4,872,151	10/1989	Smith	369/14
4,873,585	10/1989	Blanton et al.	358/335
4,888,796	12/1989	Olivo, Jr.	379/101
4,891,694	2/1990	Way	358/86
4,930,160	5/1990	Vogel	380/63
4,930,518	5/1990	Vogel .	
4,947,244	8/1990	Fenwick et al.	358/86
4,995,078	2/1991	Monslow et al.	380/10
5,109,482	4/1992	Bohrman	395/154
5,130,792	7/1992	Tindell et al. .	
5,132,953	7/1992	Matsubayashi	369/44.37
5,195,135	3/1993	Palmer .	
5,223,924	6/1993	Strubbe	358/86
5,274,463	12/1993	Matsumoto et al.	358/335
5,313,297	5/1994	Fukui et al.	348/7

OTHER PUBLICATIONS

"The Future of Home Entertainment", Pioneer, Advertisement in the Wall Street Journal, Sep. 28, 1992.

Primary Examiner—Tommy P. Chin
Assistant Examiner—Robert Chevalier

[57] ABSTRACT

This invention relates to a video system comprising integrated random access video technologies and video software architectures for the automated selective retrieval of non-sequentially stored parallel, transitional, and overlapping video segments from a single variable content program source, responsive to a viewer's preestablished video content preferences. Embodiments of the video system permit the automatic transmission of the selected segments from a variable content program as a seamless continuous and harmonious video program, and the transmission of the selected segments from an interactive video game further responsive to the logic of the interactive video game. The viewer's video content preferences being stored in the video system, and/or in a compact portable memory device that facilitates the automatic configuration of a second video system. The system's controls also provide an editor of a variable content program the capability for efficiently previewing automatically selected video segments to permit the editor to indicate the inclusion of the selected segments in the program to be viewed by a viewer. The system further integrates fiber optic communications capabilities and the read/write laser disc player capabilities to facilitate the downloading of a variable content program from a source remote to the system.

19 Claims, 11 Drawing Sheets

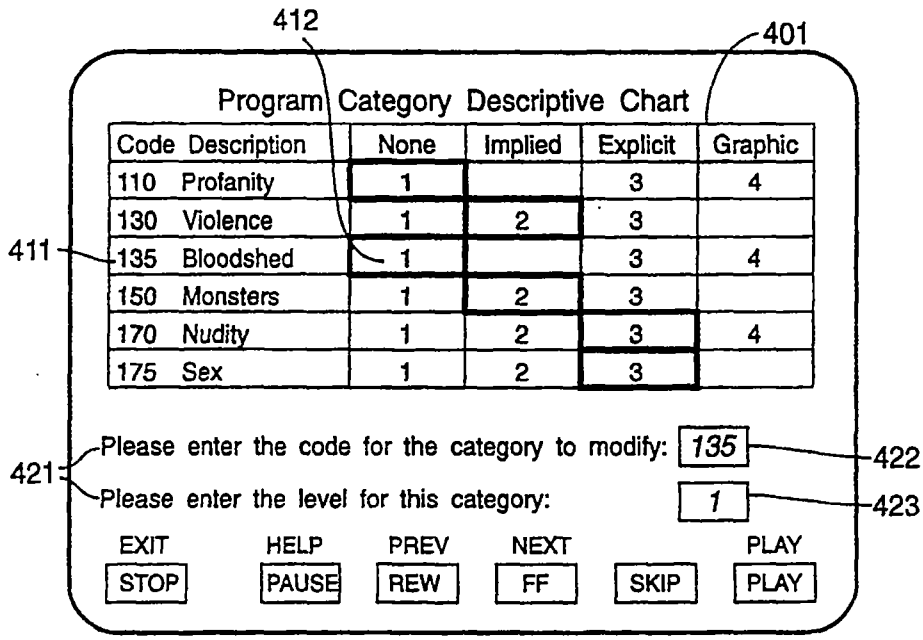

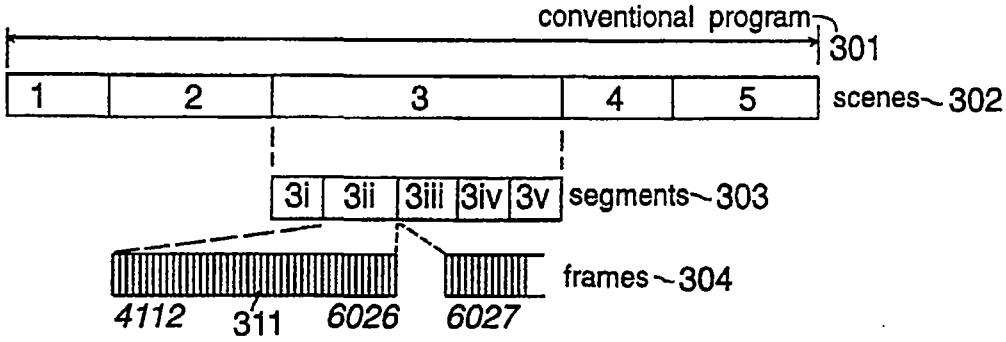

FIG. 3A

Code	Description	None	Implied	Explicit	Graphic
135	Bloodshed			3	

319



FIG. 3B

Code	Description	None	Implied	Explicit	Graphic
135	Bloodshed	1			

329



FIG. 3C

Code	Description	None	Implied	Explicit	Graphic
135	Bloodshed				4

339

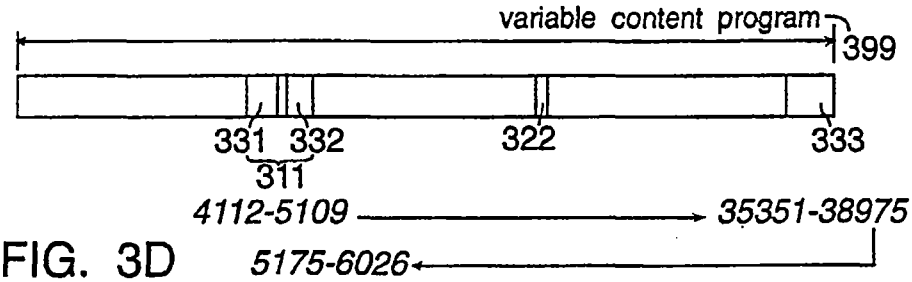

FIG. 3D

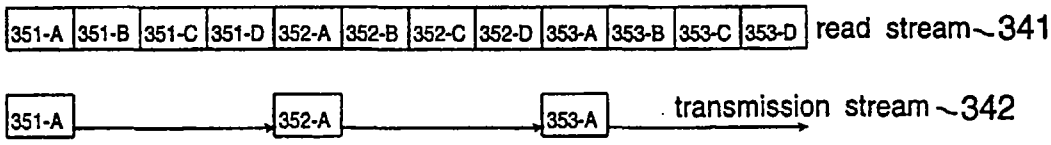

FIG. 3E

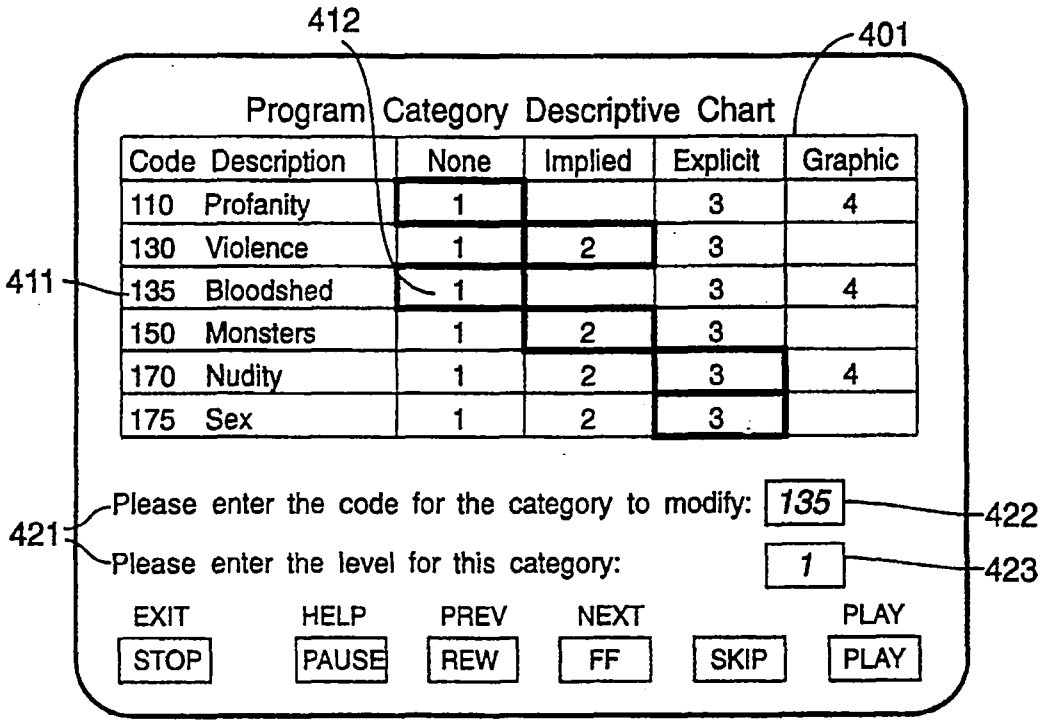
412
401
Program Category Descriptive Chart
Code Description
None
Implied
Explicit
Graphic
110 Profanity 1 3 4
130 Violence 1 2 3
411
135 Bloodshed 1 3 4
150 Monsters 1 2 3
170 Nudity 1 2 3 4
175 Sex 1 2 3
421
Please enter the code for the category to modify: 135
422
Please enter the level for this category: 1
423
EXIT
STOP
HELP
PAUSE
PREV
REW
NEXT
FF
SKIP
PLAY
PLAY

FIG. 4

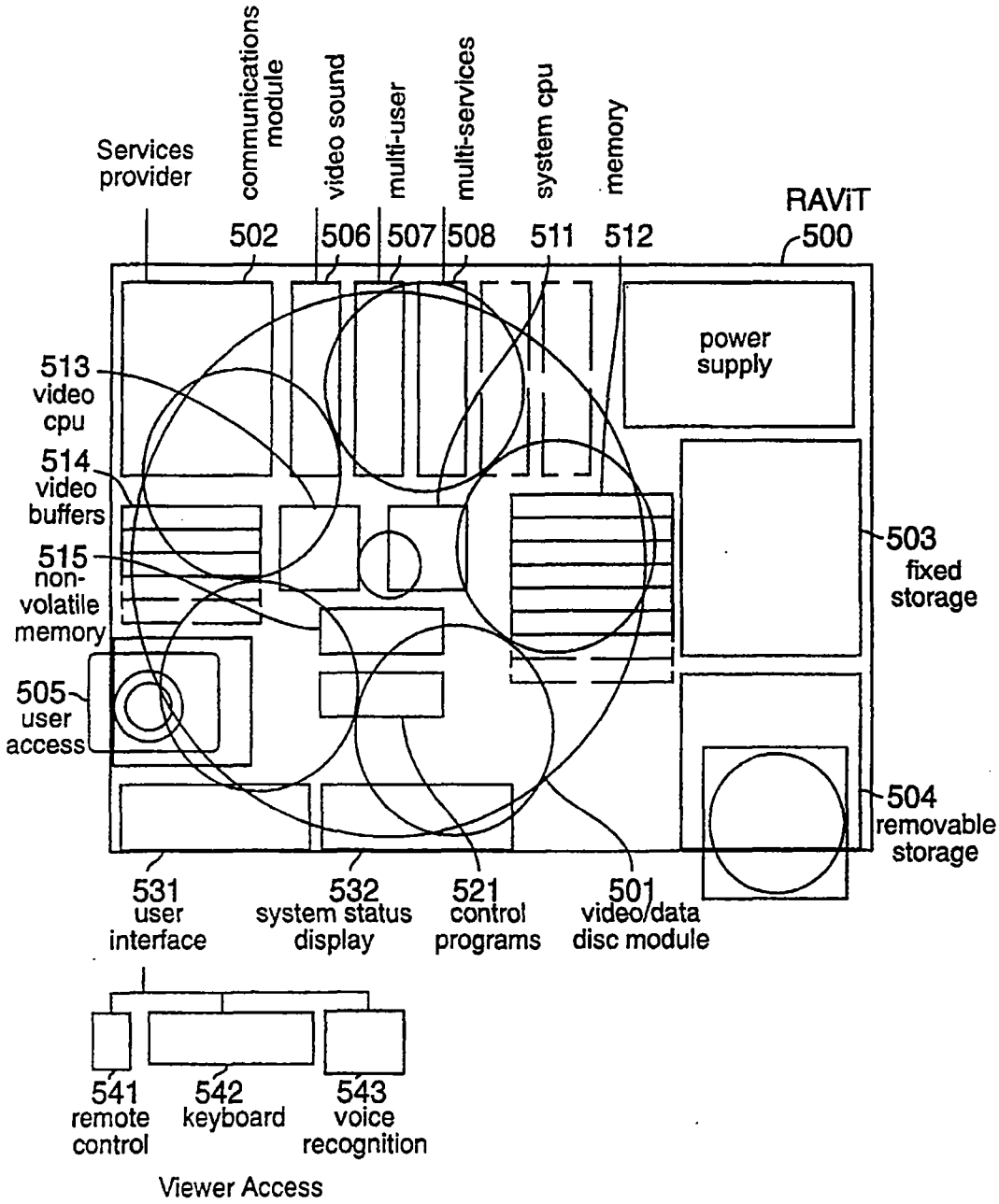
Services provider
communications module
video sound
multi-user
multi-services
system cpu
memory
502
506
507
508
511
512
RAViT
500
power supply
513 video cpu
514 video buffers
515 non-volatile memory
505 user access
503 fixed storage
504 removable storage
531 user interface
532 system status display
521 control programs
501 video/data disc module
541 remote control
542 keyboard
543 voice recognition
Viewer Access

FIG. 5

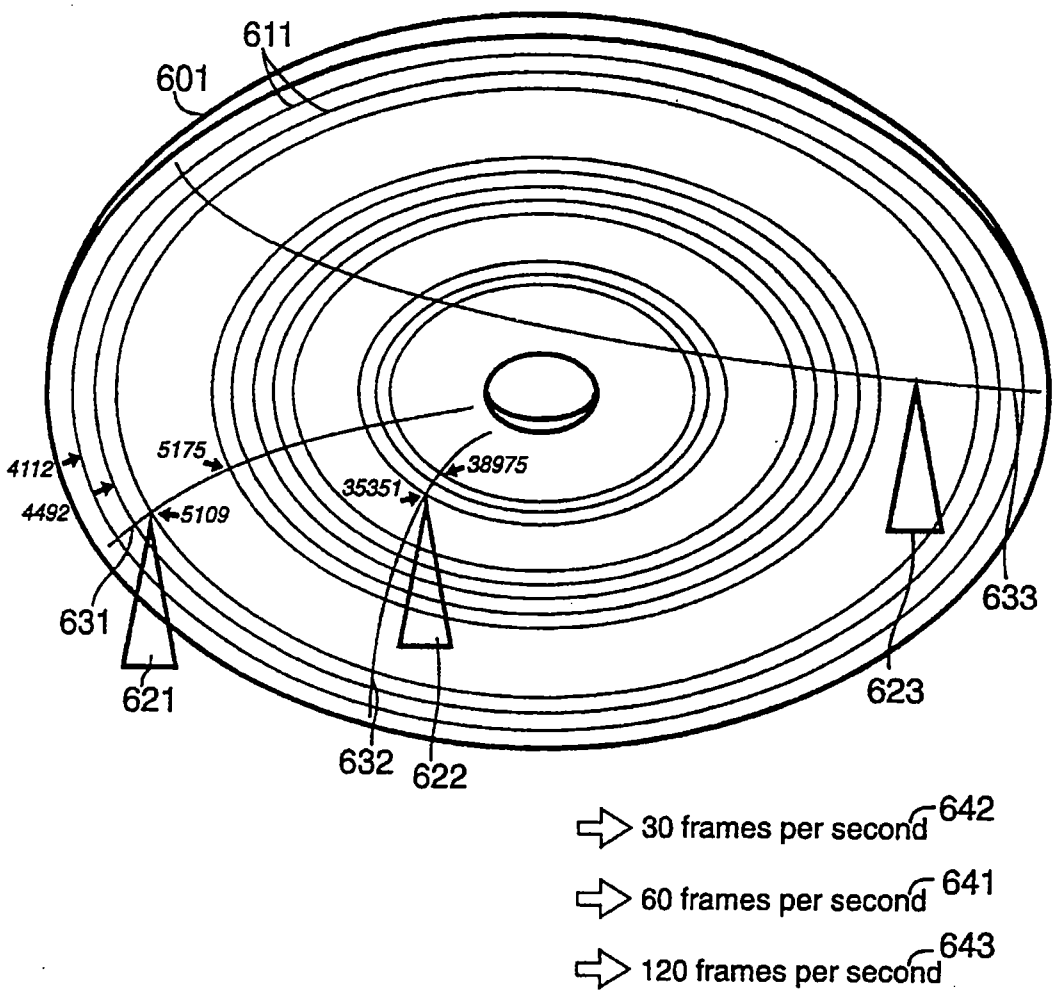
611
601
4112
4492
5175
5109
35351
38975
631
621
632
622
623
633
30 frames per second
642
60 frames per second
641
120 frames per second
643

FIG. 6

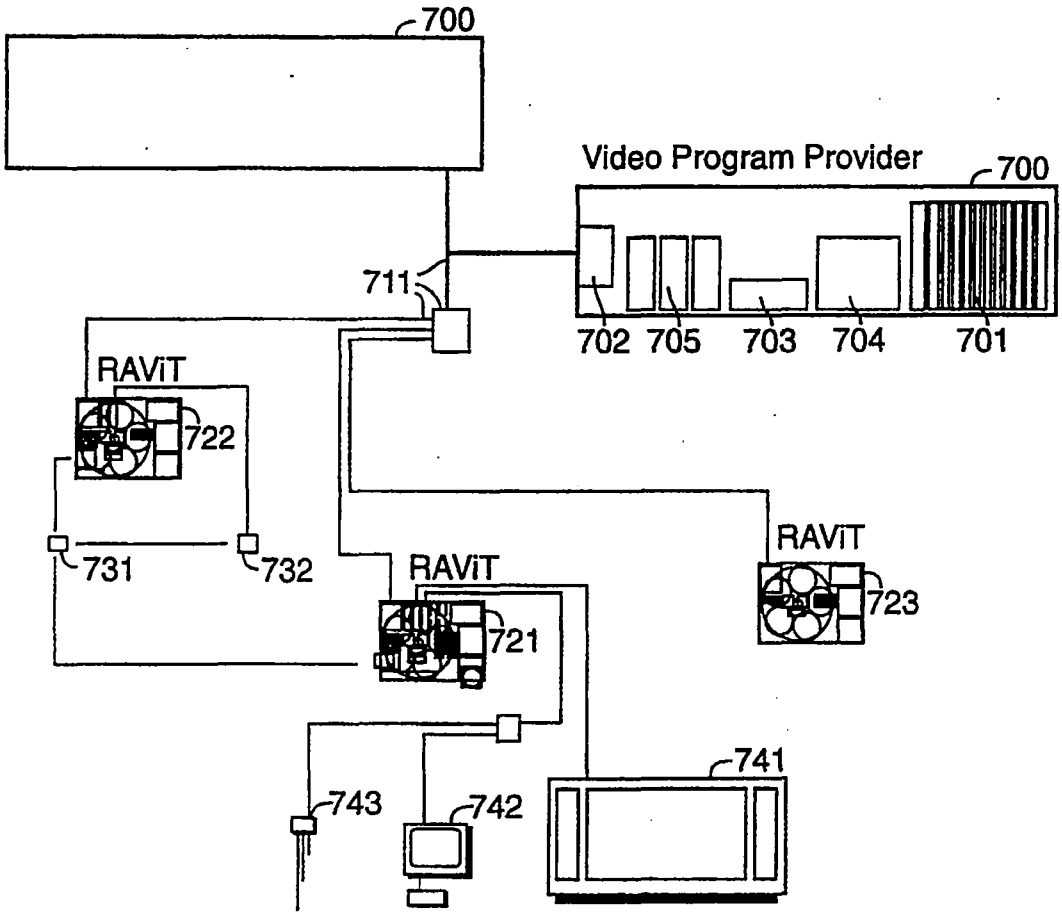
700
Video Program Provider
700
711
702
705
703
704
701
RAViT
722
731
732
RAViT
721
RAViT
723
741
743
742

FIG. 7

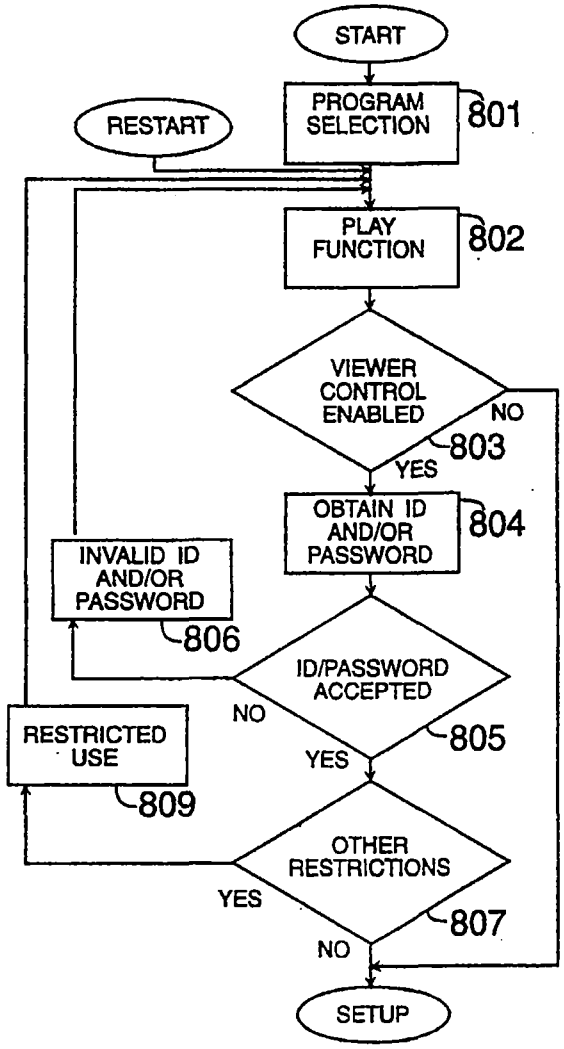
START
PROGRAM SELECTION
801
RESTART
PLAY FUNCTION
802
VIEWER CONTROL ENABLED
NO
803
YES
OBTAIN ID AND/OR PASSWORD
804
INVALID ID AND/OR PASSWORD
806
ID/PASSWORD ACCEPTED
NO
805
YES
RESTRICTED USE
809
OTHER RESTRICTIONS
YES
807
NO
SETUP

FIG. 8A

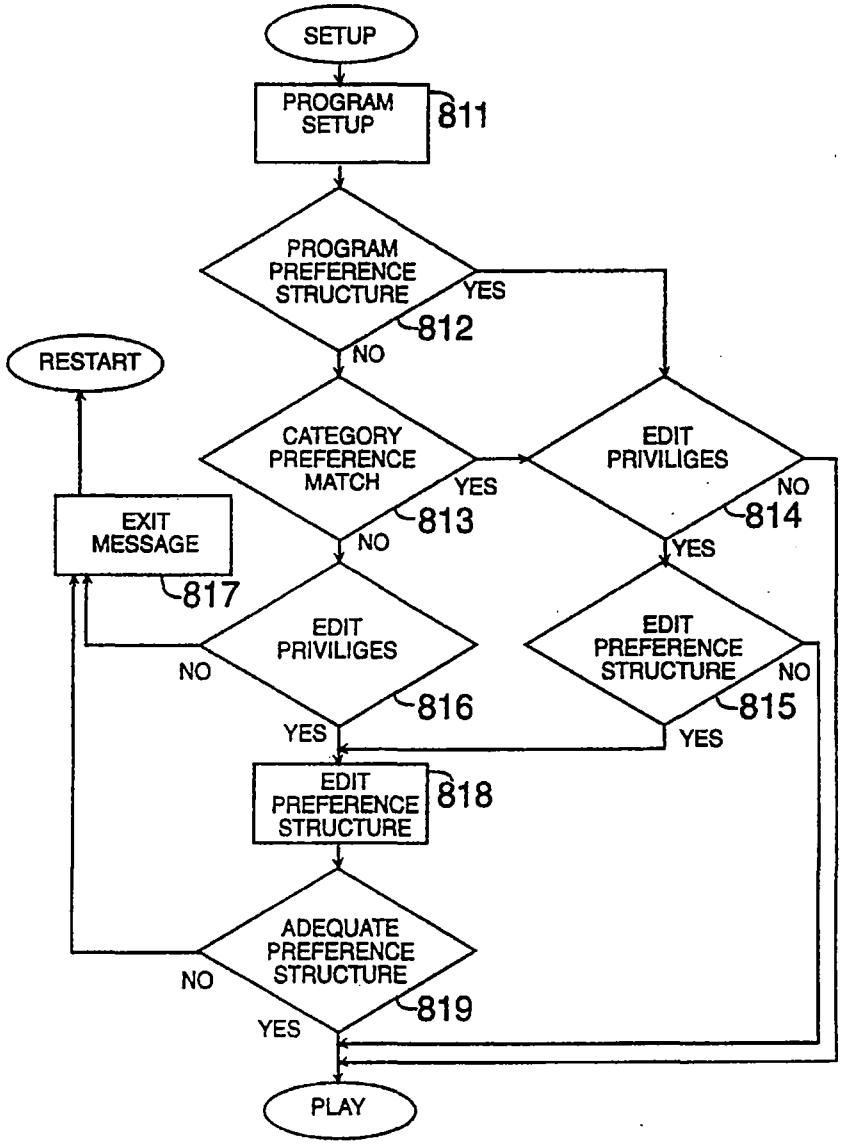
SETUP
PROGRAM SETUP
811
PROGRAM PREFERENCE STRUCTURE
YES
812
NO
RESTART
CATEGORY PREFERENCE MATCH
YES
813
NO
EDIT PRIVILIGES
NO
814
YES
EXIT MESSAGE
817
EDIT PRIVILIGES
NO
816
YES
EDIT PREFERENCE STRUCTURE
NO
815
YES
EDIT PREFERENCE STRUCTURE
818
ADEQUATE PREFERENCE STRUCTURE
NO
819
YES
PLAY

FIG. 8B

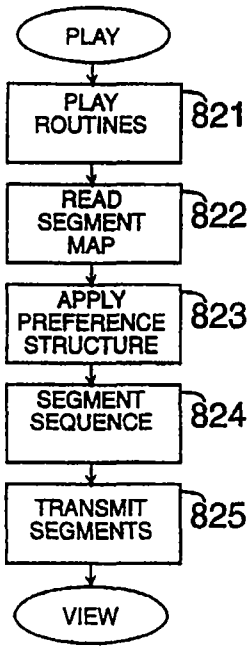
PLAY
PLAY ROUTINES
821
READ SEGMENT MAP
822
APPLY PREFERENCE STRUCTURE
823
SEGMENT SEQUENCE
824
TRANSMIT SEGMENTS
825
VIEW

FIG. 8C

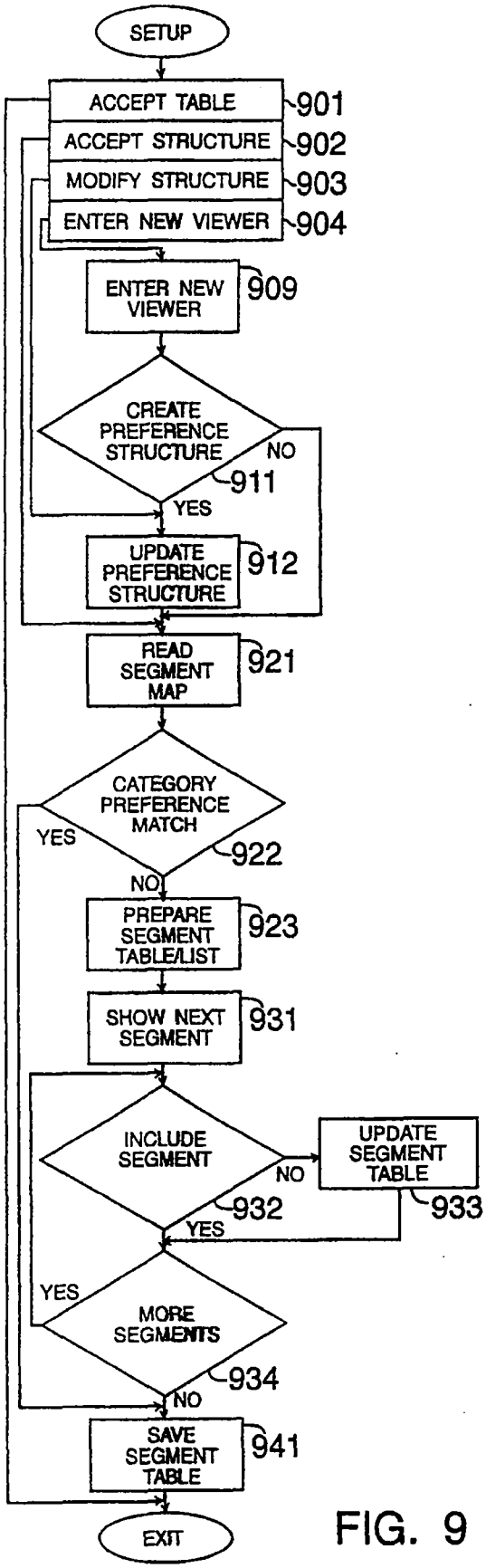
SETUP
ACCEPT TABLE
901
ACCEPT STRUCTURE
902
MODIFY STRUCTURE
903
ENTER NEW VIEWER
904
ENTER NEW VIEWER
909
CREATE PREFERENCE STRUCTURE
NO
911
YES
UPDATE PREFERENCE STRUCTURE
912
READ SEGMENT MAP
921
CATEGORY PREFERENCE MATCH
YES
922
NO
PREPARE SEGMENT TABLE/LIST
923
SHOW NEXT SEGMENT
931
INCLUDE SEGMENT
NO
UPDATE SEGMENT TABLE
932
933
YES
YES
MORE SEGMENTS
934
NO
SAVE SEGMENT TABLE
941
EXIT

FIG. 9

SEAMLESS TRANSMISSION OF NON-SEQUENTIAL VIDEO SEGMENTS

BACKGROUND OF THE INVENTION

1. Field of the Invention

The invention relates to a video device for the automated selective retrieval of non-sequentially-stored video segments of a video program, from a single video program source, responsive to a viewer's preestablished video content preferences, and the transmission of the selected segments as a seamless video program.

2. Description of the Prior Art

Conventional memory storage devices, as for example, laser disc players and computer hard disks, when accessing or transferring data randomly located on the device's memory storage unit, the read/write functions of the device must wait for the proper positioning of the read/write head from one location to another location. This operation usually referred to as the average access time and measured in microseconds is one of the primary determinants of a random access device's performance capabilities.

In full motion picture applications a device's capabilities are also critical in terms of transfer rates and storage capacity. A typical motion picture runs at 30 frames per second. In digital terms, reasonable quality video, such as may be obtained from a VCR tape, requires approximately 1.5 megabytes per second, or a total of 10,800 megabytes for a two hour film. While the application of compression technologies reduces the storage requirements, this is offset by the greater requirements of high definition television (HDTV).

As a result of the storage capacity, transfer rates, and average access times, laser optical technology has proven its costs effectiveness in full motion picture applications. State of the art laser video disc systems, such as for example Pioneer's VDR-V1000, incorporates separate optical heads for recording and erasing, and provides an average access time of 0.3 seconds. While in most applications a 0.3 seconds average access time can be accommodated, this proves not be the case when a continuous seamless retrieval of random frame sequences from a single video source is required. A 0.3 average access time translates into a gap of 0.3 seconds (approximately 9 frames) each time a non-sequential frame needs to be retrieved. Where the viewing of a motion picture requires a significant number of such random accesses, the repeated gaps represent a significant failing.

Various data and video read and read/write architectures, such as those comprising: i) a single head; ii) multiple heads, in which each head operates on a different source surface; iii) multiple heads operating in one surface, in which each set of heads moves over the surface as a single unit; and iv) multiple heads, in which each head's movement over the shared surface and function is independent of the operation of the other heads; provide different average access time and transfer rate capabilities.

For example, the patent to Takemura et al., U.S. Pat. No. 4,744,070, discloses a tracking method for an optical disc in which two laser spots irradiate two adjoining slants of a V-shape groove. Since the laser spots movement over the disc surface are in unison, the shortcomings of access time gaps are not resolved.

With respect to the objects of the present invention, the shortcomings of the prior art known to the applicant are not limited to the hardware architecture. From the outset, film production has and continues to be directed at the eventual production of a unique linear sequence of frames.

In the creation of motion picture, producers and artists often surrender the exercise of creative expression to the inherent constraints of an unique linear sequence of frames, generally accepted norms, marketing objectives, and the censoring influence of the Motion Picture Association of America, Inc. rating system. In general, the resulting compromise inevitably provides for scenes, content, or artistic expression, which either exceeds or fails to satisfy individual viewer preferences. Too often, gains made in the exercise of creative expression result in the loss of potential audience. To that extent, recently a number of films are issued in an U.S. version, and a more explicit European version.

Viewers that are attracted by the general subject matter of a motion picture, and, on the basis of the MPAA's motion picture rating system, elect to view the motion picture are subjected to material in the program they would not have selected for their own viewing. In a 1989 poll conducted by the Associated Press, 824 of the respondents felt that movies contained too much violence, 804 found too much profanity, and 724 complained of too much nudity.

A number of editing systems in the prior art have attempted to address these issues. For example, the patent to Von Kohorn, U.S. Pat. No. 4,520,404, discloses a remote recording and editing system, whose functions include the activation or deactivation of a television receiver and a recording apparatus by the transmission of control or editing command signals, generated from a central station where an operator monitors a broadcast transmission. Similarly, the patent to Chard, U.S. Pat. No. 4,605,964 discloses a television controller that utilizes coding for identifying and automatically deleting undesirable sound and visual event broadcast with a program. The patent to Olivo, Jr., U.S. Pat. No. 4,888,796, discloses a screening device capable of automatically disabling the TV or video receiving device in response to the receiver's recognition of a non-interfering material content signal co-transmitted with the program signals. However, even the aggregation of Von Kohorn, Chard, and Olivo, fails to suggest a video software/hardware architecture wherein the disabling of segments of the program material does not produce dead segments.

The patent to Vogel, U.S. Pat. No. 4,930,160, addresses the resulting dead segments in the transmission by providing a facility for displaying alternative material during the dead segments. The alternative material selected during censorship periods can originate from a remote source, for example, another television broadcast, or locally, for example, from a video disc or tape player. However, Vogel and the prior art known to the applicant, do not provide a system that creates, from a single source, an automatically edited, seamlessly continuous program in which edited out segments are replaced with other parts of the same program responsive to a viewer's preestablished video content preferences.

The patent to Bohrman, U.S. Pat. No. 5,109,482, discloses and is titled "Interactive Video Control System for Displaying User-Selectable Clips". In Bohrman, it is the viewer that, with precise knowledge of the contents of the video segments of a program, interactively creates an arrangement of the viewer selected

segments. In other words the segments are not automatically selected and arranged responsive to a viewer's preestablished content preferences. Additionally, Bohrman fails to address the problems associated with the laser disc player's average access times.

A number of other interactive systems in the prior art provide viewers the means to participate, and thereby affect, the program's story lines or plot. The patent to Best, U.S. Pat. No. 4,569,026, discloses a video entertainment system where human viewers conduct simulated voice conversations with screen actors or cartoon characters in a branching story game shown on a television screen. As opposed to passive systems, the essence of interactive video systems is a viewer's participation. In interactive systems, at frequent points, the system's continued operation is dependent on the viewer's response.

In electronic games, of which Sega's CD ROM System for Genesis is an example, the access time of approximately one second results in noticeable pauses in the action, the effect of which is also mitigated by the interactive nature of the software. As a result of their interactivity, these systems can accept significantly slow random access times.

Further, as electronic games have been principally directed at children, or contain primitive subject matter, they have not dealt with issues raised by the more complex adult forms of expression inherent in contemporary motion picture films. While electronic games provide setup editing capabilities (selection of: level of difficulty, character, weapons, etc.), they do not provide censoring editing capabilities. This is clearly evidenced in the discussion, marketing, and development of video games dealing with material generally deemed not suitable for children. Given the random access capability of CD-based systems, it is surprising that when dealing with adult subject matter, the inherent limitations of conventional films and the MPAA's rating system have been adopted by forthcoming CD based video games.

Thus the prior art known to the applicant has failed to show an integrated software and hardware architecture that provides for the automated selective retrieval of non-sequentially stored video segments of a program, from a single program source, responsive to a viewer's preestablished viewing preferences, and the transmission of the selected segments as a seamless video program.

SUMMARY OF THE INVENTION

These and other shortcomings of the prior art are overcome by the various features of the present invention which are directed to a seamless transmission of non-sequential video segments. For purposes of the present invention, various terms or nomenclature used in the art are defined as follows:

The term "viewer" as used herein is meant to include and be interchangeable with the words "player" (when referring to a person), subscriber, and "user". That is, the term "viewer" ought to be understood in the general sense of a person passively viewing a video, interactively playing a video game, retrieving video from a video provider, and/or actively using multi-media.

The terms "video" and "video program" are interchangeable and refer to any video image regardless of the source, motion, or technology implemented. A "video" comprises images found in full motion picture programs and films, in interactive electronic games, and in video produced by multimedia systems. Unless otherwise qualified to mean a computer software program, the term "program" is interchangeable and may be replaced with the word "video". While a particular feature may be detailed with respect to a specified viewing, gaming, or computing application, it is intended herein to apply the teachings of the present invention broadly and harmoniously across the different classes of applications that generate a video output.

The terms "variable content program" and "variable content game" refer to a specific video program characterized by a greater variety of possible logical content sequences that result from the additional segments provided for that purpose. The term "content" referring principally to the form of expression rather than the story-line. Where initially produced as a variable content program, the video utilizes parallel, transitional, and overlapping segments to provide viewing of a program's story-line/interactive action at different levels of forms of expression.

The term "video content preferences" refers to a viewer's preferences as to the "content" of a video. "Video content preferences", specifically and principally, although not exclusively, refers to a viewer's preestablished and clearly defined preferences as to the manner or form (e.g. explicitness) in which a story/game is presented, and the absence of undesirable matter (e.g. profanity) in the story/game. In the broadest sense the term "video content preferences" further includes "video programming preferences", which refers exclusively to a viewer's preferences as to specific programs/games (e.g. Sega's "Sherlock Holmes Consulting Detective"), types of programs/games (e.g. interactive video detective games), or broad subject matter (e.g. mysteries). In contrast to the prior art "video-on-demand" systems which are responsive to a viewer's "video programming preferences"; a more inclusive "content-on-demand" system as per the teachings of the present invention is responsive to a viewer's "video content preferences".

The term "seamless" is intended in the sense that the transmission of sequential and non-sequential frames is undiscernible to the eye, and not in the sense of the natural video seams that result in the intended changes from one scene to another, from one camera angle to the other, or from one gaming sequence to the other. In a seamless transmission of a variable content motion picture a constant video frame transmission rate is maintained, whether the frames are sequential or non-sequential.

The terms "B-ISDN", specifically referring to a broadband integrated services digital network, and "fiber optic", specifically referring to a network comprising fiber optic cable, refer to any "communications" means, private or public, capable of transmitting video from a remote video source to a viewer. In the broadest sense these terms further comprise satellite communications.

Where not clearly and unambiguously inconsistent with the context, these and other terms defined herein are to be understood in the broadest possible sense that is consistent with the definitions.

Accordingly, in view of the shortcomings of the prior art, it is an object of the present invention to provide a device comprising integrated random access video technologies and video software architectures that furnishes a viewer the automated selective retrieval of non-sequentially stored, parallel, transitional, and overlapping video segments from a single variable content

program source, responsive to the viewer's preestablished video content preferences, and transmits the selected segments as a logical, seamless, and continuous video program.

It is another object of the invention to provide an interactive video game system comprising interactive video game software, variable content game, and a program segment map defining segments of the variable content game, furnishing a player of the interactive video game the automatic and logical selection of video segments responsive to the application of the player's video content preferences to the program segment map, and responsive to the logic of the interactive video game software.

It is yet another object of the present invention to provide a device that furnishes a previewer of a variable content program the capability for efficiently previewing automatically selected segments from the program, responsive to a viewer's preestablished preferences, to permit the previewer to indicate the inclusion of the selected segments in the program to be viewed by the viewer.

It is yet another object of the present invention that a viewer's video content preferences be stored in a portable memory device.

It is yet another object of the present invention to integrate fiber optic communications capabilities and read/write laser disc player capabilities within a single device to facilitate the downloading of a motion picture program from a source remote to the device.

It is yet other objects of the present invention to provide a variety of reading architectures that produce a seamless reading of sequential and non-sequential segments of a variable content program from a single video source.

Briefly these and other objects of the invention are accomplished by means of the random access video technologies detailed herein in combination with the teachings herein of a variable content program.

Unlike traditional film media that permits a program format with only a single sequence of frames, random access video technologies make possible a variable content program format that is characterized by a variety of possible logical sequences of video frames. In a variable content program the artist and program producer are challenged to create greater variety in the form of expression, and utilize parallel, transitional, and overlapping segments to provide viewing of a program at that level of expression, content, detail, and length, that is consistent with a variety of viewer preferences.

In contrast to interactive motion pictures, and full motion video games, in a variable content program it is principally the form of expression that is the object of alternate frame sequences, rather than the story-line. In a variable content program, each of the significant scenes and actions can be implicitly expressed, as found for example in a "PG" rated film, explicitly expressed, as found for example in an "R" rated film, and graphically expressed, as found for example in an "NC-17" rated film. As a result, unlike motion pictures which are packaged as a single sequence of frames, the U.S. version, the European version, the edited-for-TV version, the "XXX" version, and the version addressing each viewer's particular tastes and preferences, reside harmoniously within a single variable content motion picture.

The present invention details a number of random access video technologies that permit the retrieval, in a logical order, of the non-sequential segments that comprise a variable content program without altering the transmission of the required frames per second. An embodiment of a video system as per the present invention, permits the automatic transmission of the selected segments from a variable content program as a seamless continuous and harmonious video program responsive to a viewer's preestablished video content preferences. In a second embodiment, segments from an interactive video game are selected responsive to the logic of the interactive video game software and the player's video content preferences.

In a laser disc video system, random access video technologies principally comprising: multiple independently simultaneously controlled reading units, video buffer, and media architecture, permit, in one embodiment, during the read operation of one of the reading units of the video information contained in a program source, the repositioning of a second one of the reading units to the next required non-sequential position in the program source. The resulting synchronization effectively eliminating the gaps that would result from a single reading unit's average access time. That is, pauses, gaps, dead frames, and fill-ins, are eliminated in the playing of non-sequential video segment stored in a single program source.

To achieve the automated selection of only those segments consistent with a viewer's preestablished viewing preferences, each program segment in a variable content program is defined by and is associated with a content descriptive structure that provides specific and detailed information as to each segment's subject matter, level of detail, and form of expression. The segments definitions of a program further comprises a first and last frame identifier, and beginning frame identifiers of the next logical segments. The segments definitions are organized into a program segment map.

A random access device as per the present invention provides each viewer the opportunity to preestablish both any number of generalized, personalized video content preferences, and program/event specific content preferences, identifying the viewing preferences in each of a number of content categories. By analyzing a viewer's preestablished video content preferences as they relate to a program's segment map, the random access device gains the information to automatically exclude segments of the variable content program containing material which the viewer does not wish to view, and to transmit as a logical seamless transparently harmonious and continuous program only those sequential or non-sequential scenes or segments of the program whose content and form of expression are consistent with the viewer's preestablished video content preferences. The playing of a variable content program does not require that the viewer preview the contents of the segments of the program, and does not require viewer intervention during the viewing of the program.

Thus, the present invention while challenging the video program producer to fully exercise the freedom of expression, provides for the automated, seamless transmission of non-sequential video segments containing that level of artistic expression that is consistent with a viewer's preestablished video content preferences. The present invention, effectively harmonizing what are regarded in the popular press as conflicting objectives, provides an unparalleled opportunity for "freedom of expression and freedom from expression" (C).

These and other features, advantages, and objects of the present invention, are more easily recited and are apparent in the context of the detailed description of the invention, accompanying drawings, and appended claims, that follow.

BRIEF DESCRIPTION OF THE DRAWINGS

FIG. **1** is a flow chart summarizing the steps of producing a variable content program as per the present invention;

FIGS. **2A, 2B, 2C,** and **2D,** are illustrations of video segment descriptive structures as per the present invention;

FIGS. **3A, 3B, 3C,** are diagrams of three versions of a video segment and corresponding descriptive structures, each segment a variation of the other as per the present invention;

FIG. **3D** is a diagram representation of a variable content program showing the non-sequential arrangement of segments as per the present invention;

FIG. **3E** is a diagram representation of a variable content program reading stream and transmission stream as per the present invention;

FIG. **4** is a sample video content preference selection screen as per the present invention;

FIG. **5** is a schematic diagram of a random access video technology device comprising fiber optic communications and variable content laser disc capabilities as per the present invention;

FIG. **6** is a schematic detail of a laser disc module's multiple reading units architecture as per the present invention;

FIG. **7** is a schematic diagram a video program provider and subscriber network architecture as per the present invention;

FIGS. **8A, 8B,** and **8C,** are flow charts summarizing the process of playing a variable content program as per the present invention; and

FIG. **9** is a flow chart summarizing the process of previewing flagged segments as per the present invention.

DESCRIPTION OF THE PREFERRED EMBODIMENT

The steps in the production of a variable content program are Summarized with respect to the simplified flow chart of FIG. **1.** Each scene or fragment of a scene on a video script is reviewed **130** according to an appropriate segment descriptive structure, as for example detailed with respect to FIGS. **2A–D.** A screenwriter now has the freedom to expand the scenes by adding parallel, overlapping, and transitional segments, to cover a wider descriptive range **140** without the concern for the limitations inherent in first generation program formats. A successful filming **150** of this variable content architecture is a function of the skill of director(s), actors, animators, programmers, etc. to provide for parallel and transitional segments with the required transparent harmony.

In contrast to the editing of first generation motion pictures that require producing a unique linear sequence of segments, editing of this program format requires a parallel, non-sequential, logical arrangement of segments **160.** A segment assigned a category descriptor may be congruent in one or more frames with a segment assigned a different category descriptor. Where necessary, a video segment is associated with more than one audio segment, and corresponding separate voice and video category descriptors are provided. The editing of a variable content program is significantly distinguished from the editing of an interactive motion picture is that in the latter the editing is concerned with a branching story-line, while editing in the former is principally concerned with optional forms of expression of the same story-line.

The complexity of a variable content program/game is only limited by the requirements, desires, skill, and hardware/software available to the program editor. To that extent, it is intended that the editing functions, in particular, be assisted by integrated computerized editing resources. With respect to the computer assisted editing, the teachings of the patents to Bohrman, previously cited, and to Kroon et al., U.S. Pat. No. 4,449,198, are by reference incorporated herein. It should be appreciated that the art of program editing under this new format is intended to significantly transfer censorship, and time-constrained editing decision making from the producer/editor to the viewer.

As each segment is defined, the beginning frame and end frame in each of the relevant segments is identified, the segment content is assigned a category descriptor, and logical entry and exit references are assigned **170.** The resulting segment definition is mapped **180** and the required user interface produced. The program segment map, any user interface routines particular to the program, and player control codes, if required, are provided with the information comprising the programs video and sound.

FIGS. **2A, 2B,** and **2C** illustrate examples of generalized descriptive structures that are utilized to review the contents of each segment contained in a given program, and to assign the appropriate segment content descriptors. Specifically, FIG. **2A** illustrates a descriptive structure **210** implementing a descriptive scale **211** that mirrors the current rating system utilized by the MPAA (Motion Picture Association of America, Inc.). The MPAA's "Voluntary Movie Rating System" comprises the symbols "G", "PG", "PG-13", "R", and "NC-17" and the corresponding legends, which are trademarked/pending by the MPAA.

The descriptive structure, further includes, in this example, a number of categories **212** of conventional concern in the popular culture. Each number in the matrix **219** in the chart represents the particular descriptor for a given category that can be assigned to a specific scene or segment. For example, a scene of an old western style barroom brawl might be assigned a **130-4** (graphic violence). While the absence of an element is presumed, unless otherwise indicated, as an example, the absence of bloodshed is assigned a **135-1** (no bloodshed).

The contents of a segment are further coded on the basis of a number of other considerations. FIG. **2B** is an example of an element descriptive structure **220** utilized to analyze the development **221** of a number of elements **222** such as character, location, time, degree of detail, and the level of expertise appropriate for the segment. In a similar manner, an individualized, tailored, and descriptive structure may be provided for any one category or group of categories. For example, FIG. **2C** illustrates a descriptive structure **230** utilized to classify segments according to a level of inclusion **231.** Such a structure is appropriate, for example, in coding a news report.

Additionally, or alternatively, a video segment descriptive structure, as shown in FIG. **2D,** is implemented that incorporates the MPAA's movie rating

system. Under this video segment generalized descriptive structure **240**, segment definitions are assigned a descriptor (rating) **249** from a descriptive scale **241** incorporating the MPAA rating symbols **249**, or any other available analogous rating system. Determination of each segment's rating symbol being similar to the manner in which the MPAA rating system is applied to a motion picture. While this rating scale **241** may be implemented in conjunction with categories, as detailed with respect to FIGS. 2A, and 2B, a simplified embodiment is not concerned with identifying the category, instead, the segment definition comprises frame information and a simple descriptor (rating).

It is noted that FIGS. 2A–2D are examples of an overall framework for segment analysis, the actual descriptive structures and level of complexity utilized may be highly tailored by the producer of a program to reflect the specific content of a program without being limited by the structures which will be widely accepted, constitute a standard, and found to be generally utilized in other works. Each program producer is offered the flexibility within the overall architecture of this descriptive structure to determine and include only those categories that are relevant to a particular program, and to add categories as the producer requires. Similarly, the producer is offered some flexibility in determining the labelling of the descriptive scale.

Meeting the objectives of being able to provide both a standardized set of descriptive structures that permits the automatic application of a viewer's preestablished preferences to a variety of programs, and provides the producer of the program the flexibility described above, are accomplished for example by assigning unique classification codes to each set of preestablished standardized categories, and by reserving a range of classification codes that are recognized by the system as requiring additional selection by the viewer.

FIG. 3A illustrates an example of a conventional motion picture program in which the segments are arranged as a unique sequential arrangement of frames. In a variable content program adaptation of the conventional motion picture, the various scenes **302** of the program are, according to an evaluation of the contents of the scenes, divided into appropriate segments **303**. Each segment is identified with a beginning and ending frame and comprises any number of frames **304**. In this example, scene three is divided into four segments, in which segment 3ii **311** begins at frame **4112** and ends at frame **6026**. The next segment, 3iii, begins at frame **6027**. Segment 3ii, which in a conventional motion picture contributes to an "R" rating for the program, includes frames depicting explicit bloodshed. The content of segment 3ii **311** is indicated by the numeral **3** in the appropriate cell **319** of that segment's descriptive structure.

Referring now to FIG. 3B, to provide for the option of editing-out the explicit bloodshed in a variable content program, the program segment map includes an additional segment definition **321** beginning at frame **4112** and ending at frame **5205**. The end of this segment **321** is linked to a new transitional segment **322** beginning at frame **35205** and ending at **35350**, the end of which is linked to frame **6027**. In this fashion, frames are omitted and added to provide a continuous transparent edited version of any segment. This frame sequence **321/322** is associated with the corresponding segment content descriptive structure **329** to indicate the absence of bloodshed. In all other respects the segments **321/322** are equivalent to the original segment **311**. For first generation programs, the editing-out works in a like manner except that the transitional segment **322** is not available to make the seamless transmission from frame **5205** to **6027** transparent.

To provide for the option to include a graphic level of bloodshed, the program segment map includes an additional segment definition. Referring to FIG. 3C, in this case, only **66** frames of the "first" segment **311** are "ignored", and new segment definitions **331** and **332** are created, to accommodate the graphic bloodshed included in an additional segment **333** beginning at frame **35351** and ending at frame **38975**. This frame sequence **331/333/332** is associated with an appropriate segment content descriptive structure **339**. In this manner, parallel and transitional segments provide a descriptive selection mix ranging from a segment combination excluding bloodshed **321/322** to a segment combination including graphic bloodshed **331/333/332**, as well as the segment combination including explicit bloodshed **311**. As a result, the particular scene of which these segments are a part can be viewed at any of the three content levels for that category.

A scene can include subject matter of more than one category. In such cases, overlapping segments and transitional segments are provided to permit viewing of one subject matter at one descriptive level and viewing of another subject matter at another level.

Referring now to FIG. 3D, the location of the net additional frames that result from the additional segments **322/333** cause some frames to be non-sequentially placed in the variable content program **399**. Ignoring the frame numbers of segment **322**, FIG. 3D is illustrated to diagrammatically emphasize the resulting sequential and non-sequential random-like arrangement of video segments in a variable content program. This is shown for example, in the segment combination **331/333/332** depicting explicit bloodshed and the corresponding non-sequential frame sequence.

The segments combinations shown comprising the segment definitions together with the corresponding descriptors comprise a program segment map. A program segment map causes, for example, the retrieval of the segment combination beginning at frames **4112–5109**, followed by frames **353514–38975**, and ending with frames **5175–6026** in response to the application of a viewer's program content preferences to the program segment map.

In an actual feature length variable content motion picture the significant additional segment/frames are arranged responsive to the particular random access hardware architecture implemented. For example, FIG. 3E, illustrates an arrangement in which the reading unit reading stream **341** comprises alternating frames from four separate segments and is read at an effective rate of 120 frames per second. The processing architecture selecting the desired segment from the read stream **341** to generate a transmission stream **342** of the desired frames **351A–353A** at a rate of 30 frames per second. This and other architectures are detailed later on with respect to FIG. **6**.

A system embodying the teachings of the variable content program provides each viewer the opportunity to define a personalized video content preferences. The content preferences identifies each viewer's preferences in a range of video content categories. The architectures of a viewer's content preferences and that of the segment content descriptive structures are interrelated.

As is detailed below, the preferences are established prior to transmission of the program to the receiver, so that during the transmission of the program viewer intervention is not required.

FIG. **4** illustrates a program's categories descriptive chart **401** that merges the various descriptive structures of the segments of a program. For example, the category bloodshed **411** indicates that the program offers options to omit the viewing of bloodshed, or include explicit or graphic segments in the viewing of the program. In this example, depicted by bold boxes is the viewer selected level for each category. The viewer in this case has elected to omit bloodshed **412** in his/her viewing of the program. In this particular screen design, viewers indicate their selections by following the entry requests **421**, and pressing the appropriate numeric keys on the player's remote control unit to indicate the category they wish to access **422** and the viewing level for the category **423**.

In simplified terms, any segment with a descriptive level higher (abstract) than the viewer-selected level for a given category is not included in the program produced for the viewer. The segment selected for viewing (a descriptive level equal to or next lowest) provides the next segment beginning frame information, skipping over parallel segments of a lower rating than the viewed segment.

While the teaching above are detailed principally in terms of a variable content motion picture movie, clearly the teachings are applicable to any video program. Specifically, interactive video games utilizing full motion video segments can also benefit from providing the viewer/player of the game the option to preestablish video content preferences in addition to the gaming options which may be included in the video game software. As in a variable content program, in a interactive variable content video game, the video segments shown are consistent with the player's video content preferences.

The preferred hardware architecture of a video system that embodies the teachings of, and delivers the benefits of, the variable content program is referred to herein as a Random Access Video Technology system ("RAViT") (C), and is specifically detailed with respect to FIG. **5**. Referring to FIG. **5** a preferred configuration of a RAViT **500** device principally comprises the following primary modules and sub-systems: i) random access laser video/data disc module **501**; ii) communications module **502**; iii) fixed memory sub-system **503**; iv) removable memory sub-system **504**; v) compact portable memory sub-system **505**; vi) external video/sound input/output support module **506**; vii) multi-user modules **507**; and viii) multi-services modules **508**.

A fixed memory sub-system **503** refers to any nonvolatile memory storage device principally utilized to randomly read/write and store significant quantities of information. An example of a present fixed memory storage sub-system is a personal computer hard disk drive, currently generally installed in 80–240 MB capacities.

A removable memory sub-system **504** refers to any nonvolatile memory storage device principally utilized to transport information to and from two similarly equipped devices. Examples of present removable memory storage sub-systems are personal computer floppy disk drives 1.2 MB, micro floppy disk drives 1.4/2.8 MB, backup tape drives 60–240 MB, and removable hard disks 20–80 MB. The random access laser disc module **501** is another example of a removable memory storage sub-system.

A compact portable memory sub-system **505** is principally distinguished from a removable memory sub-systems **504** in the size of the media and the greater variety of memory storage technologies that are generally implemented. Nonetheless, some of the removable memory storage media such as for example, the micro floppy disk, are also considered compact portable memory media. With present technology, compact portable memory media is available in dimensions similar to conventional credit cards. Examples of compact portable memory are: laser read/write cards, in which at least one surface of the card permits a laser to read/write information; electronic cards, in which the information is stored in electronic components; and magnetic cards embodying magnetic storage technology, of which a credit card is an example. Other examples of compact portable media are electronic cartridges commonly utilized in electronic video game systems.

Clearly, a variety of memory devices are available utilizing technologies and combinations of technologies to suit particular performance requirements. The above classifications of the memory devices are directed at bringing attention to functional capabilities of RAViT rather than to a particular technology. The classifications are not intended to restrict a device to a particular classification, limit the selection of devices which may be implemented, or to limit the function of the particular device implemented.

From a marketing standpoint, it is also preferred that RAViT additionally "play" other laser media, such as for example current laser discs, CDs, CDGs, photo CDs, and interactive programs and games, in a conventional manner. This being diagrammatically shown in FIG. **5** as the five circles inside the representation of the laser disc unit **501**. In this context, it is also noted that the multimedia capabilities in RAViT in combination with its ability to extract video/sound/data from these sources offers the user sophisticated CD-ROM like capabilities and interactive full motion video gaming capabilities. As to the latter, RAViT's hardware configuration detailed herein is significantly more capable than interactive CD-based video games such as for example Sega's CD ROM System for Genesis.

In a preferred embodiment, RAViT is a fully integrated viewing/gaming/computing video system. To that extent and given the other teachings that follow herein, RAViT's laser disc module will operate at the required rotational rate to accommodate differences in software rpm requirements. This being analogous to the different available speeds in a record player.

The external video/sound input/output support module **506** supports video/sound/data transmission to the primary video display system comprising for example a monitor/television, stereo system, and keyboard/voice recognition-response, Additionally, the input/output module supports video/sound input from local sources such as for example VCR's, video cameras, and videophones. The construction of the external support module follows the conventional practices of consumer electronic products as for example: laser disc players, VCRs, and personal computers.

Multi-user modules **507** principally support separate controlled independent access by other users of RAViT's processing, video, and communications resources. A multi-user operating system such as for example a version of Unix or Windows NT, manage the

multi-user environment. The construction of multi-user modules following established networking technology and responsive to the operating system implemented.

Multi-services modules **508** provide a host of services, such as for example residential security, and appliance operation management. The operation of the module being principally a software application running under the multi-user operating system implemented. The construction of the particular multiservice module being responsive to the particular application. Example of a primitive multi-service module is a fax/modem pc card.

RAViT further comprises computing elements and video processing elements readily found in multimedia devices and video electronic systems such as for example and not limitation: i) microprocessor **511**; ii) memory units **512**; iii) video processor **513**; and iv) video buffers **514**.

RAViT's user control interface **531** includes communications to the buttons and keys located on the cabinet of the device, and to the associated control devices **541-2-3**. The keys, buttons, and switches, conventionally found in consumer electronic devices and deemed advantageous to the operation of RAViT are implemented. These controls are further augmented by the following keys/functions: segment skipping control, preferences control, segment mapping control, and system menu control. The user control interface **531** additionally supports infrared remote control units **541**, as for example infrared numeric control pad, and infrared keyboard; wire connected control units **542**, as for example cable connected computer keyboards, mouses, and game controllers; and voice recognition units **543**.

The keyboard, as in a personal computer implementation, facilitates system setup, keyword retrieval, and system functions requiring the entry of alpha characters. Since a preferred configuration of RAViT comprises significant multimedia capabilities, a keyboard is advantageous. A keyboard connector used to connect a standard AT keyboard or a dedicated keyboard is supplied. Alternatively, an infrared-based keyboard is implemented. Further, given the computing and storage capabilities of RAViT, a voice response sub-system option accommodating minimally the few commands, such as play, stop, mute, sound, skip, required to control the basic operation of the laser disc module can additionally be provided.

Implemented in RAViT is a digital system status display sub-system **532**, which provides visual feedback and system status information.

RAViT's control programs that manage RAViT's resources, and the retrieval and processing of data and video information, reside in dedicated chips **521**. Alternatively, the control programs are stored in mass memory devices **503** from installed software, in removable memory media **504**, or in a compact portable memory device **505**.

A variable content program not only comprises variable content video/sound information, but also comprises a corresponding program segment map, user interfaces, program routines, and system control codes. In an interactive variable content video game, the video game software also comprises a variable content program. The terms "program segment map" and the term "data", where not inconsistent with the context, are to be understood to comprise the program segment map, user interfaces, program routines, system control codes, and gaming software (where applicable). Wherever the terms "variable content program" are found, and the context permits, they are to be understood to comprise all the video/sound and "program segment map" elements.

In a preferred laser disc implementation, the entire variable content program (video/sound and program segment map) is provided in a video/data disc in a format similar to that required by the video images contained in the disc. Alternatively, the data is provided in the video/data disc in a different format from that of the video format, such as for example in digital photomagnetic or magnetic formats. In this respect the teachings of the patent to Smith, U.S. Pat. No. 4,872,151, are by reference herein incorporated. In a second alternative, the data is separately provided by a removable memory media **504**, a compact portable memory device **505**, or downloaded by means of the communications interface **502**.

A RAViT simply configured and comprising a laser disc module **501** and for example a micro floppy disk drive **504** provides editing out benefits for the existing library of motion picture laser discs. In this configuration, the micro floppy disk provides the program segment map, user interface and other control programs particular to the motion picture, and stores a viewer's video content preferences. While the resulting program suffers, as does edited-for-television programs, from the lack of transitional, parallel, and overlapping segments, this technique provides an immediate library of full motion pictures to which the teachings of the present invention is applied.

Upon a playing of a program, the control program causes the reading of the program's identifier from the program source **501**, searches the mass memory fixed storage device **503** for a corresponding viewer preferences, or applicable generic preferences, and upon viewer confirmation applies the stored viewer preferences to the program segment map.

With respect to control programs, scheduling routines, viewer preferences, program segment map, and other principally software elements, it is noted that these may be separately or jointly stored in any one of RAViT's various firmware/hardware memory devices. For example, the viewer preferences are stored in non-volatile resident memory **515**, in the memory of the fixed or removable memory sub-system **503/504**, a user's optical read/write access card or electronic memory card **505**, or from the respective read/write video/-data laser disc **501**. In an interactive video game application, data in general, and game software in particular, for example, may be downloaded to the hard disk, reserving subsequent access of the laser disc for video/-sound retrieval.

Generally, the control programs **521** generate a segment table reflecting the application of the viewer's preferences to the video program's content map. The segment table provides the control program's segment scheduling routines the information to cause the automated logical selection of sequential and non-sequential segments of the video program responsive to program segment map, the viewer's preferences, and the logic of the gaming software where applicable. The processing of the control programs being principally a function of the system cpu **511** and system RAM **512**.

RAViT's video random access retrieval architecture principally comprising the video/data laser disc module **501**, video cpu **513**, video buffers **514** and processing capabilities, provides for the retrieval and transmission

of selected sequential and non-sequential video segments stored in the disc. In terms of the integration of laser disc and processing capabilities and the retrieval of non-sequential video frames, the teachings of the patent to Blanton et al, U.S. Pat. No. 4,873,585, which details a system comprising a video disc player for storing and retrieving video frames, and a control computer for accessing particular sequences of stored frames on the video disc, are by reference incorporated herein, and are relied upon to detail the core operation and construction of a laser-based random access system. With respect to laser read/write units and read/write laser discs, the prior art teachings of laser disc players, such as for example Pioneer's Rewritable Videodisc Recorder VDR-V1000, and the teachings of the patent to Matsubayashi, U.S. Pat. No. 5,132,953, are by reference incorporated herein.

RAViT's laser disc module **501** comprises laser disc technology distinguished principally in the cooperative operation, responsive to the instructions of the segment scheduler, of the multiple read/write laser units to produce a continuous transmission of non-sequential video segments. In a laser-based random access multiple read/write architecture, each read/write unit assembly and operation is principally equivalent to corresponding laser-based assemblies found in the prior art, in which a laser beam reads and reproduces memory signals from a disc.

Referring now to FIG. **6**, the principal elements of a laser-based random access multiple read/write units architecture as per the present invention are illustrated. FIG. **6** shows a laser disc **601** having therein, in a laser readable format, sufficient recording area **611** to store a variable content program. The recording area **611** of the laser disc **601** is shown as substantially concentric tracks lying in a single plane. Alternatively, the recording area comprises a multitude of quasi-concentric tracks forming one or multiple spiral tracks. Additionally, tracks can be provided in one or more planes on each side of the laser disc, as well as on both sides of the disc.

Referring now to FIG. **6** in conjunction with FIGS. 3C and 3D, in a preferred embodiment of reading non-sequential video segments from a single video source, a first reading unit **621** is directed by the segment scheduler to retrieve video information corresponding to the desired frames **4112–5109** of a first, or current, video segment from a video source. Concurrently with the first reading unit **621** reading the information from the first segment, a second reading unit **622** is positioned, according to the program segment map and the segment scheduler, to preread within one revolution of the disc beginning frame information of a next non-sequential segment from the same video source.

In this example, the next non-sequential segment begins at frame **35351**. Concurrently with the first reading unit reading **621** the current segment, the second reading unit **622** is caused to preread into a video buffer (**514** FIG. 5) that portion of the next non-sequential segment beginning at frame **35351** necessary to provide a seamless transition from the first reading unit reading of the current segment ending at frame **5109** to the second reading unit reading of the next non-sequential segment beginning at frame **35351**. The video buffer, thus containing the segment information necessary to provide a synchronized, seamless transition from the first segment to the second segment without any gaps in the transmission of the retrieved video segments as a continuous video program.

Concurrently with the second reading unit **622** reading the next non-sequential segment, now a current segment, the first reading unit **621** is repositioned to begin prereading of a next non-sequential segment beginning at frame **5175**. By the time the second reading unit **622** completes reading the current segment at frame **38975**, the first reading unit **621** has preread frame **5175**. The process, analogous to a relay race, repeating itself until the last desired segment has been read.

In an interactive video game application, a multiple reading unit architecture is advantageously utilized to additionally provide faster video responses to the user/-player's actions. Briefly, while a first reading unit **621** is reading a first video segment, frames **4112–5109**, a second reading unit **622** is positioned to read a second segment beginning at frame **35351**. The positioning of said second unit **622** being responsive to the option being presented to the player during the reading of the first segment which may require reading the second segment rather than continuing reading the first segment or reading the next sequential segment. Alternatively, the second reading unit provides overlay images in synchronization with the images retrieved by the first reading unit.

Each reading units's movement over the disc surface is over a designated radial segment such that the movement of each reading unit over the recorded radius of the disc is not impaired by the movement of a different reading unit. In this fashion, the movement of the first reading unit **621** over its radial segment **631** does not intersect the movement of the second reading unit **622** over its radial segment **632**.

It is noted that the reading unit's travel need not be limited to the radial segments. A positioning system providing for the positioning of the reading unit at any point over the recording media, provides the reading unit the potential to precisely intercept the beginning of a segment/frame at a precisely defined moment. This being represented in FIG. **6** as the juncture of a radial segment **631** and the beginning of frame **5175**. In this fashion the requirement of prereading into a video buffer can be reduced if not eliminated.

FIG. **6** also shows a third reading unit **623**. While a simple variable content motion picture application does not require more than two reading units, the third reading unit **623** is illustrated principally to emphasize that a multiple-read architecture is not limited to two reading units **621–622**, and is available for more demanding interactive variable content game applications. Further, as illustrated, a reading unit's movements over the recorded surface need not be confined to a particular quadrant, side of the surface, or radius of the surface. In the illustration the third reading unit's **623** movement over the recorded surface is permitted over the recorded diameter **633** of the surface.

Additionally or alternatively, the information is recorded on the laser disc in a manner that, either through placement or duplication of frames, anticipates the desired and possible position of a reading unit. In this case, even if the movement of the reading units are confined to radial segments, the requirement of a video buffer is for this purpose eliminated. This also being represented in FIG. **6** as the various junctures of the radial segments and the beginning of the frames.

Specifically, in this architecture, concurrently with a first reading unit **621** reading a current segment from a

single video source, a second reading unit **622** is positioned to be able to intercept and read the beginning of a next non-sequential segment, in this example frame **35351**, at that instant that the first reading unit **622** completes reading the current segment at the end of frame **5109**. At that the first reading unit **621** completes reading frame **5109**, the second reading unit begins reading frame **35351**, thereby in combination with the first reading unit causing a seamless transition from the reading of the current segment to reading of the next non-sequential segment.

In the next stage, concurrently with the second reading unit **622** reading the beginning of the next non-sequential segment at frame **35351**, now a current segment, repositioning the first reading unit **621** to be able to intercept and read the beginning of a next non-sequential segment, frame **5175** at that instant that the second reading unit completes reading the current segment at frame **38975**. The process continuing until all the required segments are read.

Still additionally, or alternatively, the rotational speed of the disc platter is set sufficiently high to permit the reading unit to read into buffers sufficient video information to provide the same reading unit sufficient time for repositioning and begin reading the next non-sequential segment before the video information in the buffer is exhausted. This would in certain applications eliminate the need for multiple reading units.

Specifically, in the reading of non-sequential video segments from a single video source, a single video source **601** is caused to rotate at a sufficiently high rate **641**, in this example 60 frames per second or 3,600 rpm **641**, i.e. twice the rate of 30 frame per second **642**, to permit a reading unit **621** to both read and preread an amount of a current segment (frames **4412–5109**) into a video buffer sufficient for the reading unit **621** to be repositioned to read the beginning of a next non-sequential segment, frame **35351**, before the preread amount in said video buffer is exhausted. In this example, prereading frames **4498–5109** provides the reading unit **621** sufficient time to be repositioned to read a next non-sequential segment, frames **35351–38975**. Concurrently with the repositioning of the reading unit, the video buffer provides the last preread frames **4498–5109** to cause a seamless transition from the reading of the current segment, frames **4112–5109**, to the reading of the next non-sequential segment, frames **35351–38975**. The process continuing until all the required segments are read.

In this architecture, the reading unit prereads into the buffer only in advance of a next non-sequential segment, or continually prereads into the video buffer as the video information in the buffer is depleted.

A variation of this technique particularly applicable to interactive video game applications is detailed with respect to FIG. 3E. In this example, previously summarized, a read stream comprises alternating frames from a number of different video segments. The number of different video segments resulting from the attainable effective transfer rates of the system. For example if the video application requires a transfer rate of 30 frames per second, and video compression techniques, rotational speed, and/or reading capability of the system can achieve an effective transfer rate of 120 frames per second, than four different video segments can be read "concurrently" by a single reading unit. In such an architecture, the frame arrangement comprises a reading stream **341** of alternating frames from four separate segments A–D and is read at an effective rate of 120 frames per second. The processing architecture selects the desired segment A,B,C, or D from the read stream **341** to generate a transmission stream **342**, at a rate of 30 frames per second, of the desired frames **351A–353A**, **351B–353B**, **351C–353C**, or **351D–353D**.

To further detail, and with respect to FIG. **6**, a single video source **601** is caused to rotate at a sufficiently high rate, for example 60 frames per second **641** or 120 frames per second **643** to permit a reading unit **621** to read at multiples of the 30 frames per second rate required to transmit a single one of a plurality of video segments (A–D). Referring once more to FIG. 3E, the frames being intermittently arranged as a reading stream **341** in the video source. As the reading unit is caused to read the reading stream **341**; a video processor (**513** FIG. **5**) extracts from the reading stream **341** a transmission stream **342** representing a single one of the plurality of video segments.

In this fashion a single reading unit can provide instantaneous shifting among a number of different segments. In an interactive video game application, shifting among a number of different video segments can be instantaneously achieved in response to a players interaction with the game's software logic.

To enhance the simulation of each video stream, a windowing technique, such as shown in the previously cited patent to Blanton et al., in which only a portion of each frame is displayed, is applied to each frame in one or more of the video streams to enhance the simulation of movement within a multi-dimensional space and to provide composite images of greater complexity.

These and other variations in the particular number and arrangement of the reading units, video buffer, and frame arrangement configuration that is implemented in a RAViT is a function of the complexity of the video/-data, and cost/performance constraints. It is also intended that the teachings of the various configurations shown herein and in the cited art may be combined responsive to the particular application. Clearly, with technology continuously achieving greater storage capacity in smaller, faster, and more cost effective storage devices, there is no apparent limitation to the complexity of the variable content program that can be commercially executed.

The description above has for simplicity been detailed with respect to a reading unit. It is to be understood that a reading unit herein comprises both reading and writing capabilities operationally independent of the operation of another read/write unit in the system's architecture. Additionally, a read/write unit need not be limited to a particular current architecture, enhancements to the construction of the reading unit itself, such as for example multiple tracking mirrors/beam splitters, are contemplated to produce faster access times and transfer rates. Further, the multiple read/write architecture detailed need not be limited to a laser disc system. In an alternate embodiment, a hard disk drive is modified as per the teachings above detailed to significantly increase transfer rates and lower average access times. Clearly, at present, in a hard disk embodiment the read/write units are magnetic read/write heads.

Generally, the viewing of a variable content program is intended to be hardware independent. That is, a variety of hardware, firmware, and software architectures are possible either locally or remotely accessible by the viewer that provide the benefits of a variable content program. In particular, a random access device's read/-

buffer architecture, modified as per the present invention, is intended to be implemented in a variety of mass memory devices. Embodiments of the read/buffer architecture detailed herein is not intended to be limited to any particular available recording medium and recording format technologies. The teachings of the present invention are applicable to a number of random access technologies such as, for example, and not limitation, fixed and removable magnetic, optical, or photomagnetic media, and digital or analog recording formats. Any combination of existing or forthcoming media, format, and compression memory technologies may advantageously incorporate the teachings herein detailed.

In general, parts, sub-assemblies, and components of a RAViT are of conventional characteristics and are freely substituted by like functioning elements and components. For example, and not limitation, while fiber optic-based communications are preferred, copper phone lines and coaxial cable-based communications are considered, albeit less capable nonetheless, functional equivalents. Additionally, a certain degree of redundancy of components is illustrated in FIG. 5 to schematically show and detail significant functions. Clearly, redundant components in general, and redundant electronic components in particular, are intended to be eliminated in a preferred embodiment. For example, in a number of configurations a removable memory subsystem and a compact memory sub-system are both required. In a general sense, one is the functional equivalent of the other. In a preferred embodiment, for example, a removable memory sub-system is eliminated, and the compact memory sub-system performs the functions that are associated with it. In general, where cost effective, components are designed to serve a combination of functions.

Further, the configuration of RAViT's various modules, components, and sub-systems, are intended to offer flexibility analogous to that found in a personal computer. Specifically with respect to the multi-user capabilities, a RAViT may be configured, for example, with more than one laser disc module. Whether inside the primary cabinet or in a mating or sister cabinet. Responsive to user friendliness, a more advanced wireless plug and play communications and power motherboard and cabinet design is preferred. The motherboard and cabinet permitting the replacement of, for example, the power supply just as easily as a battery is replaced in a portable personal computer. In a preferred embodiment of RAViT, every component and sub-system is replaced without resorting to screwdrivers and the need to unplug and plug communications and power cables.

While an embodiment of the present invention is detailed above with respect to a random access video laser disc device physically accessible by the viewer, variations are also possible. For example, the laser disc device need not be physically located near the television set. The patent to Fenwick et al. U.S. Pat. No. 4,947,244, by reference incorporated herein, discloses remote video distribution systems such as may be found in a hotel, wherein the viewer is provided remote controlled access to video resources. Fiber optic communications easily permit the required transfer rates between a device, or any alternative memory device, and a viewer's receiver/television.

As shown by the hardware configuration detailed with respect to FIG. 5, RAViT is equally adept at retrieving full motion video from a resident program storage device or remotely from a network-based service provider. A B-ISDN interface, an internal or external modem, or a dedicated communications line, such as for example a coaxial cable, provides RAViT communications capabilities with providers of programming and other on-line services. These other services comprising, for example, banking, security, shopping, instructional, and educational services.

With respect to video-on-demand, and video networks, the teachings of the patents to Monslow, U.S. Pat. No. 4,995,078, to Way, U.S. Pat. No. 4,891,694, and to Walter, U.S. Pat. No. 4,506,387, are by reference incorporated herein. These patents teach a variety of land line and fiber optic transmission of programs embodying varying degrees of viewer capabilities in the selection of programs. While the prior art does not teach transmission of a variable content program, a reading of said art will assist the reader interested in obtaining a more detailed disclosure of the hardware of such systems than is necessary to provide here.

FIG. 7 is a simplified schematic diagram a video program provider and subscriber network architecture as per the present invention. Participants in a B-ISDN **711**, as per the present invention, comprise any number of video program providers **700** and any number of subscribers **721**. As in a communications network, each participant is able to transfer and retrieve video/data transmissions from any other participant. Each participant obtaining a hardware configuration consistent with their desire and their financial means.

The particular configuration of each subscriber's video system's **721/722/723** storage, memory, processing, and communication capabilities is responsive to, but is not necessarily limited by, the minimum requirements of the particular service provider. A RAViT configuration, such as detailed with respect to FIG. 5, provides the required video program storage, processing, and communications architecture.

The video system of a participant who wishes to serve as a video program provider **700** is functionally equivalent to the RAViT device previously detailed, differing only in that the respective resources are appropriately scaled and modified to simultaneously access a variety of programs, and service a number of subscribers.

A video provider system **700** comprises: i) mass storage random access memory devices **701** for storing a plurality of variable content programs, and a plurality of program segment maps each defining segments of a corresponding video program; ii) communications linkages **702** to the B-ISDN for establishing communications with a plurality of participating subscriber video systems (RAViTs) **721/722/723**; iii) processing hardware/software **703** for retrieving from participating subscriber video system a subscriber's video content preferences, and for automatically selecting, for each of the participating subscribers, variable content program/program segment map, and/or segments, from a programbase, comprising a plurality of variable content programs and corresponding program segment maps, responsive to the application of the corresponding one of the subscriber's video content preferences to the programbase; iv) random access devices **704** for retrieving for each participating subscriber the corresponding selected variable content programs and/or video segments; and v) transmission architecture **705** for transmitting, to each participating subscriber video system, the corresponding retrieved selections. Simply stated,

an on-line variable content program provider provides each viewer content-on-demand.

In a preferred embodiment, in response to a subscriber **721** request of one or more variable content program(s) from a video provider **700**, the entire variable content program including all the parallel, overlapping, and transitional segments is provided via the fiber optic network **711**. Alternatively, the program is provided to the subscriber in the form that results from the execution of the viewer's video content preferences, i.e. a logical seamless sequence of only those segments that are consistent with the viewer preferences are transmitted in a real-time or a non real-time format over the network **711**.

Where the subscriber **721** remains on-line with the video provider **700** during the transmission of the video and utilizes the hardware resources of the video provider, a RAViT comprising principally communications capabilities without significant local storage, processing, or memory, is adequate. In such an architecture the viewer preferences are retained by the video provider.

Retrieving video from a remote video provider permits subscribers to efficiently obtain from an extensive programbase a program to be viewed at the time of their choosing, over which they exercise complete control as to the subject matter, form of expression, and other elements comprising the program. Further, the resulting program need not comprise or result from a single variable content program in a programbase. A program may result from the automated selection of a variety of segments/programs from the programbase.

In a video provider, the implementation of the multiple read head architecture provides for the simultaneous retrieval of several versions of a program from a single program source to satisfy simultaneously the particular viewing requirements of several subscribers. A multiple read head architecture reduces, for example, the number of copies of a program that the on-line video provider requires. Alternatively, where cost effective, a variable content program may be entirely or partially stored in RAM.

It is also important to note that the novel combination of an external fiber optic based communications module and a multiple read/write units laser disc module, provides a RAViT configuration capable of efficiently downloading significant amounts of full motion video to be viewed, played with, or processed at the subscriber's leisure. In such a RAViT the downloading of, for example, a feature length motion picture, an interactive video game, or a series of lectures can be achieved with unprecedented speed.

The previously shown capacity to read/write the viewer preferences from/to a compact portable memory device **731** provides a viewer the means to automatically configure a RAViT that had not previously learned the viewer's video content preferences (dumb RAViT).

Referring once more to FIG. **7**, in anticipation of the desire to efficiently utilize a dumb RAViT, a viewer instructs the smart RAViT **721** to download to a compact portable memory device **731** the desired viewer preferences and program request routines. To automatically configure and retrieve programming consistent with the preferences and program request routines, the viewer provides the prepared compact portable memory device **731** to the dumb RAViT **722**, or to an accessory device **732** in communication with the dumb RAViT **722**. The compact portable memory device **731** automatically configuring the dumb RAViT without necessarily downloading the viewer preferences other than to volatile memory. The operation being similar to moving a game cartridge from a first game player to a second game player.

In this context, programming request routines automate the retrieval of desired programming from a programming services provider **700** accessible to a RAViT **722**. In this fashion, for example, a travelling executive can automatically configure each days new hotel room RAViT to retrieve videophone messages, the day's news in a format and for topics preestablished by the executive, followed by a menu of recently released films that the executive has not seen. The operation being analogous to inserting an access card in a hotel room door.

Alternatively, a similar automated configuration is performed by means of line-based external communications capabilities **711** available to both the dumb RAViT **722** and the smart RAViT **721**.

As indicated with respect to FIG. **5**, and represented in FIG. **7**, multi-user and multi-services modules support separate controlled independent access by other users of RAViT's processing, video, and communications resources. In addition to the primary video display system **741** supported by RAViT **721**, the multi-user module and multi-services module installed in this example support a separate monitor/keyboard **742** access to RAViT's **721** resources, and cooperatively supports the operation of a security system **743**.

Before proceeding with a detailed description of the steps of utilizing a variable content video disc on RAViT, it is important to appreciate that in general following the initial setup of RAViT with a viewer preferences, a subsequent viewing of a variable content program conforming to the standard structure only requires the pressing of a play key. Following the pressing of the play key, RAViT automatically initiates playing of the video program without the necessity of any further viewer interaction or instructions. In other words, in a standardized descriptive structure architecture, once RAViT initially learns the viewer's preferences, it does not require any more of the viewer than, for example, a conventional laser disc player. Similarly in the playing of an interactive variable content game, once RAViT initially learns the viewer/player preferences, the gaming interaction proceeds transparently of the video editing functions. It is intended that a single viewer preferences serve both gaming and viewing applications. Optionally, the viewer may establish separate viewing preferences for each of the classes (e.g. gaming, viewing, computing) of video programs.

The steps comprising the method of viewing a variable content program on a RAViT are detailed with respect to the flow chart of FIGS. **8A**, **8B**, and **8C**. Beginning at step **801**, the viewer selects and retrieves the desired program consistent with the architecture of the particular RAViT hardware implementation. Upon selection of the play function **802**, RAViT's software, firmware, and hardware processing capabilities ("processor") issue a command to read the viewer control setup to ascertain if viewer control is enabled **803**. If enabled, RAViT's handshaking routines request viewer identification and, if required, a corresponding password **804**. If the viewer identification and password are not found acceptable **805**, the appropriate error message

is transmitted to the television **806**, and RAViT is returned to a state prior to the viewer play request **802**.

If viewer identification and password are found acceptable **805**, the processor checks for other restrictions to a user access **807**. These additional restrictions include: time of day restrictions for the user, and/or accumulated usage during specified time frames. If restrictions are enabled that prevent usage **807**, an appropriate error message **809** is transmitted to the television, and RAViT is returned to a state prior to the viewer play request **802**. The user-permission capability enables a parent to have complete control over the use of RAViT, and provides for multiple individualized preferences.

If viewer control is not enabled **803**, or if enabled, verification of the user **805** and verification of restrictions permit usage **807**, program setup routines are initiated. Referring now to FIG. **8B**, program setup routines **811** include reading, from the program source, program identification information. Based on the program identification information, which in addition to including a unique identification code also contains qualitative and classification program information, setup routines search to see if a corresponding viewer preferences/table for the identified program is available **812**. Otherwise, the program category descriptive structures **813** are obtained from the program source to determine if a viewer preference is established for each of the program categories.

Once viewer preferences are established, the processor verifies set up status for editing privileges **814**, to determine if the viewer has editing privileges for the class of programs to which the present program belongs and the categories included therein. The processor at this point transmits to the television a request for the viewer to indicate if the existing preferences are to be edited **815**. If at step **814** edit privileges are not available for the viewer, the processor initiates normal play routines. If the viewer indicates that no editing privileges are to be exercised **815**, normal play routines are initiated as well; otherwise, editing of the viewer preferences occurs at step **818**.

The edited viewer preferences are interactively verified **819** until an adequate category preference match, as required by the program and the user is established, or the viewer selects to exit. Exiting at **819** returns RAViT to a state prior to the viewer play request **802**.

If a viewer preferences for the login viewer for the selected program is not available **812**, or at least one of the categories of the program is not contained in the viewer preferences **813**, then the processor verifies if edit privileges are available for the viewer for the class of programs and the categories **816**. If no edit privileges are available, an exit message **817** is transmitted to the television, and RAViT is returned to a state prior to the viewer play request **802**. If edit privileges are available **816**, then editing of the viewer preferences **818** is initiated.

Editing the viewer preferences **818** is supervised to insure that viewer modifications are consistent with the permissions established for that viewer. Individual viewer permissions are established broadly for any one or more classes of programs or categories, or specifically for any category. Once editing of the preferences is found complete **819**, as required by the program category listing, play routines are initiated.

Referring now to FIG. **8C**, following the enabling of the play routines **821**, the program segment map is read **822** from the program segment map storage media or memory. As previously detailed, the program segment map defining the sequential and non-sequential segments of the selected program. At this point, RAViT's processing capabilities retrieve and apply the viewer's preferences, stored in a memory or a storage device, to the program segment map **823**. The application of the viewer's preferences to the program segment map results in the automated logical selection of sequential and non-sequential segments of the selected video program **824** consistent with the viewer's video content preferences and the program segment map. Once the segments to be played and their sequence are determined **824**, the random access retrieval and transmission capabilities of RAViT automatically retrieve the selected sequential and non-sequential video segments stored in the video program storage device, and transmit the video segments as a seamless, continuous video program **825**.

In a interactive video game, the start and setup routines detailed with respect to FIGS. **8A**, and **8B** are integrated with each games setup routines.

As suggested previously, the capabilities of RAViT are particularly well suited to providing an editor (i.e. parent) complete control as to the video material to which a viewer/player (i.e. child) is exposed. As indicated above, AViT provides: user, time of day, amount of viewing controls; and individual preferences for each viewer/player or class of viewers/players. Additionally, supplementing or alternative routines are provided which are preferable in those instances where: i) segments cannot be rated according to standardized descriptive structures; ii) the utilization of a descriptive structure system is not desired; or iii) a simpler routine provides the desired functionality.

Specifically, the present invention permits an editor to automatically select segments of a video program previously identified in a program segment map as providing material which may not be suitable for a viewer; viewing the selected segments and determining their suitability for viewing by the viewer; automatically generating a listing of segments responsive to the segment suitability determination applied to the program segment map; automatically retrieving the listed segments; and automatically transmitting the retrieved segments as a continuous video program for said viewer. Segments not suitable for a viewer may be defined as segments providing content and form of expression which, in a conventional sense, is deserving of a rating other than a MPAA "G" rating.

Alternatively to, or in addition to the editing system based on the application of descriptive structures, a simplified editing system is based on the "flagging" of segments irrespective of the specific nature of the material which may not be suitable for a viewer. That is all segments containing material not suitable receives the same flag or code. The flagging of segments provides an efficient method of coding and retrieving the segments and indicating their inclusion/exclusion in a program/game to be viewed/played.

An example of the editing routines that provide for the efficient previewing of flagged segments are summarized with respect to FIG. **9**. One of a number of RAViT setup routines present a listing of viewers over which the editor has editorial control. With respect to each viewer and the selected program, the listing indicates if a segment table is already available **901**, and if viewer preferences are available **902** or not **903**. Addi-

tionally the option to designate a new viewer **904** is made available to the editor.

If a corresponding table for the desired viewer is available **901** and the editor does not wish to make any changes, than selecting this option exits the routine, the operation of RAViT is then permitted as detailed previously. If a corresponding table for the selected viewer is not available, and the editor does not wish to create or update the viewer's preferences **902**, than the routine proceeds by reading the program segment map **921**. If the editor wishes to modify or create viewer preferences **903**, than the routine proceeds with the appropriate routines **912**. If the editor indicates the entry of a new viewer **904**, the appropriate viewer entry routines are enabled **909**, and the opportunity to create viewer preferences for the new viewer is provided **911**.

The routines to update/create new preferences **912** permit both a .program specific or permanent updating of the selected viewer's preferences. Once viewer preferences are indicated, if any, the selected program's segment map is read **921** and compared to the preferences **922** to the extent that they are available.

If all the flagged segments are effectively excluded by the viewer preferences **922**, than the resulting program segment table is saved **941** and the routine is exited. Otherwise, in addition to an initial segment table, a list is prepared **923** consisting of any flagged segments that have a descriptive level lower than the corresponding level in the preferences, and flagged segments for which there is no corresponding preferences. In the absence of viewer preferences every flagged segment is included in the segment list.

In a manner similar to the retrieval of non-sequential segments outlined previously, only the segments in the segment list are shown one after the other **931** as a continuous stream to the editor, pausing only if an include/exclude decision is not indicated **932**. The process continuing automatically **934** until a decision on each of the flagged segments in the list is made **932**. As each decision is made the segment table is updated **933**. Alternatively, the segment table is updated and saved following the transmission of the last segment **941**.

Each segment need not be viewed in its entirety **931**, as soon as an include decision is made **932**, the showing of the next segment begins instantaneously. Additionally, it should be understood that a showing of a flagged segment is not limited to, or indicate, the actual transmission of the flagged segment's video/sound. Appreciating that certain adults may not be interested in viewing the flagged segments, a character description of the contents of the segment may be provided instead or in advance of the option to view the corresponding segment.

The above is presented to emphasize the control features and capabilities of the present invention, the particular routines shown can be enhanced in a number of ways. Configuration routines are contemplated that further facilitate and automate viewer/player controls.

For example, a configuration can be selected that automatically creates for selected or new viewers/players a segment table excluding all flagged segments. In this case at system setup a viewer is simply associated with the exclusion of all flagged segments.

Similarly, additionally, or alternatively, a viewer/-player is associated with a descriptor code paralleling the MPAA rating system as previously detailed with respect to FIG. 2D. At system setup a viewer/player is associated with an appropriate rating code, thereafter, the viewing/playing of a program is consistent with the rating code associated with the respective viewer. The simplicity of the architecture in combination with the teachings of the variable content program permits, for example, by means of a single code associated with each viewer, a parent to view an "R" version of a film, and permits a child to view a "G" version of the same film. It is noted that this architecture provides more tailored control than the simpler exclude all flagged segments architecture, but significantly less tailored control than a category specific video content preferences. In a preferred embodiment, the various structures detailed above are correlated to permit the application of a variety of content control options without requiring duplicating descriptor definition. For example a assigning a segment a descriptor other than "G" rating is equivalent to flagging the segment.

Clearly, a number of other interactive capabilities are made possible by the architecture of RAViT. For example during the viewing of a program, skip keys cause the automatic skipping of the present segment and the instantaneous viewing of the next logical segment. Other functions permit interactive modification of the segment map, such as flagging a segment, as the program is being viewed. It is intended that a number of other interactive capabilities be implemented which incorporate the teachings of prior art interactive and multimedia system. Specifically in this respect, the teachings of the patent to Bohrman, previously cited, are by reference incorporated herein.

Since the prior art is well established, and many of the features, components, and methods, found therein may be incorporated in the preferred embodiment; and since other modifications and changes varied to fit particular operating requirements and environments will be apparent to those skilled in the art, the invention is not limited to the presently preferred form of the present invention set forth here and above, it is to be understood that the invention is not limited thereby. It is also to be understood that the specific details shown are merely illustrative and that the invention may be carried out in other ways without departing from the spirit and scope of the following claims.

What is claimed is:

1. A video system comprising:

preferencing means for establishing video content preferences responsive to at least one content category of possibly unsuitable content, said at least one content category including a violence category;

memory means for storing a video segment map and a video, said video segment map defining a plurality of video segments of said video responsive to said at least one content category;

processing means for automatically selecting video segments from said plurality of video segments responsive to an application of said video content preferences to said video segment map;

random accessing means for retrieving the selected video segments; and

transmitting means for transmitting the retrieved video segments as a continuous video.

2. The video system of claim **1**, wherein said plurality of video segments comprises at least one non-sequential video segment selected from the group consisting of a parallel video segment, a transitional video segment, and an overlapping video segment.

3. The video system of claim 1, wherein said random accessing means further comprises seamless accessing means for seamlessly retrieving the selected video segments.

4. A video system comprising:

preferencing means for establishing video content preferences responsive to at least one content category of possibly unsuitable content, said at least one content category including a violence category;

first memory means for storing a video segment map defining, a plurality of video segments of a video responsive to said at least one content category;

second memory means for storing said video;

processing means for automatically selecting video segments from said plurality of video segments responsive to an application of said video content preferences to said video segment map;

random accessing means for retrieving the selected video segments; and

transmitting means for transmitting the retrieved video segments as a continuous video.

5. A video system comprising:

preferencing means for establishing video content preferences responsive to a preestablished segment descriptive structure including a violence content category;

memory means for storing a video, said video comprising a plurality of video segments and a video segment map, said video segment map defining said plurality of video segments responsive to said preestablished segment descriptive structure;

processing means for automatically selecting video segments from said plurality of video segments responsive to an application of said video content preferences to said video segment map;

random accessing means for seamlessly retrieving the selected video segments; and

transmitting means for transmitting the retrieved video segments as a seamless video.

6. The video system of claim 5, wherein said plurality of video segments comprises at least one non-sequential video segment selected from the group consisting of a parallel video segment, a transitional video segment, and an overlapping video segment.

7. A video system comprising:

preferencing means for establishing video content preferences responsive to at least one content category of possibly unsuitable content, said at least one content category including a violence category;

memory means for storing a video, said video comprising a plurality of video segments and a video segment map, said video segment map defining said plurality of video segments responsive to said at least one content category, said plurality of video segments comprising at least one non-sequential video segment selected from the group consisting of a parallel video segment, a transitional video segment, and an overlapping video segment;

processing means for automatically selecting video segments from said plurality of video segments responsive to an application of said video content preferences to said video segment map;

random accessing means for seamlessly retrieving the selected video segments; and

transmitting means for transmitting the retrieved video segments as a seamless video.

8. A video system comprising:

preferencing means for establishing video content preferences responsive to at least one content category of possibly unsuitable content, said at least one content category including a violence category;

processing means for automatically selecting video segments from a plurality of video segments of a video responsive to an application of said video content preferences to a video segment map of said video, said video segment map defining said plurality of video segments;

random accessing means for retrieving said video segment map and for seamlessly retrieving the selected video segments from a memory means storing said video segment map and said video; and

transmitting means for transmitting the retrieved video segments as a seamless video.

9. The video system of claim 8, wherein said memory means for storing said video segment map and said video comprises a first memory means for storing said video segment map, and a second memory means for storing said video.

10. A video system comprising:

preferencing means for establishing video content preferences responsive to at least one content category of possibly unsuitable content, said at least one content category including a violence category;

processing means for automatically selecting video segments from a plurality of video segments of a video responsive to an application of said video content preferences to a video segment map of said video, said plurality of video segments comprising at least one non-sequential video segment selected from the group consisting of a parallel video segment, a transitional video segment, and an overlapping video segment, said video segment map defining said plurality of video segments;

random accessing means for retrieving said video segment map and for seamlessly retrieving the selected video segments from a memory means storing said video segment map and said video; and

transmitting means for transmitting the retrieved video segments as a seamless video.

11. A video system comprising:

preferencing means for establishing video content preferences responsive to at least one content category of possibly unsuitable content, said at least one content category including a violence category;

processing means for automatically selecting video segments from a plurality of video segments of a video responsive to an application of said video content preferences to a video segment map provided by said video, said video segment map defining said plurality of video segments;

random accessing means for retrieving said video segment map and for seamlessly retrieving the selected video segments from a laser readable means storing and transporting said video segment map and said video; and

transmitting means for transmitting the retrieved video segments as a seamless video.

12. The video system of claim 11, wherein said plurality of video segments comprises at least one non-sequential video segment selected from the group consisting of

a parallel video segment, a transitional video segment, and an overlapping video segment.

13. A video system comprising:

preferencing means for establishing video content preferences responsive to at least one content category of possibly unsuitable content, said at least one content category including a violence category;

processing means for automatically selecting video segments from a plurality of video segments of a video responsive to an application of said video content preferences to a video segment map of said video, said video segment map defining said plurality of video segments responsive to said at least one content category;

random accessing means for retrieving said video segment map and for retrieving the selected video segments from a memory means storing said video segment map and said video; and

transmitting means for transmitting the retrieved video segments as a continuous video.

14. The video system of claim 13, wherein said random accessing means further comprises seamless accessing means for seamlessly retrieving the selected video segments.

15. A video system comprising:

preferencing means for establishing video content preferences responsive to at least one content category of possibly unsuitable content, said at least one content category including a violence category;

processing means for automatically selecting video segments from a plurality of video segments of a video responsive to an application of said video content preferences to a video segment map of said video, said video segment map defining said plurality of video segments responsive to said at least one content category, said plurality of video segments comprising at least one non-sequential video segment selected from the group consisting of a parallel video segment, a transitional video segment, and an overlapping video segment;

random accessing means for retrieving said video segment map and for seamlessly retrieving the selected video segments from a memory means storing said video segment map and said video; and

transmitting means for transmitting the retrieved video segments as a seamless video.

16. A video system comprising:

preferencing means for establishing video content preferences responsive to a preestablished segment descriptive structure including a violence category;

processing means for automatically selecting video segments from a plurality of video segments of a video responsive to an application of said video content preferences to a video segment map of said video, said video segment map defining said plurality of video segments responsive to said preestablished segment descriptive structure;

random accessing means for retrieving said video segment map from a first memory means storing said video segment map, and for seamlessly retrieving the selected video segments from a second memory means storing said video; and

transmitting means for transmitting the retrieved video segments as a seamless video.

17. The video system of claim 16, wherein said plurality of video segments comprises at least one non-sequential video segment selected from the group consisting of a parallel video segment, a transitional video segment, and an overlapping video segment.

18. A method of editing a video comprising the steps of:

establishing video content preferences responsive to at least one content category of possibly unsuitable content, said at least one content category including a violence category;

retrieving a video segment map defining a plurality of video segments of said video, said video segment map responsive to said at least one content category;

automatically selecting video segments from said plurality of video segments responsive to an application of said video content preferences to said video segment map;

retrieving the selected video segments; and

transmitting the retrieved video segments as a continuous video.

19. A method of editing a video comprising the steps of:

establishing video content preferences, said video content preferences responsive to a preestablished segment descriptive structure including a violence category;

retrieving a video segment map defining a plurality of video segments of said video, said video segment map responsive to said preestablished segment descriptive structure, said plurality of video segments comprising at least one non-sequential video segment selected from the group consisting of a parallel video segment, a transitional video segment, and an overlapping video segment;

automatically selecting video segments from said plurality of video segments responsive to an application of said video content preferences to said video segment map;

seamlessly retrieving the selected video segments; and

transmitting the retrieved video segments as a seamless video.

* * * * *

EXHIBIT D

US005589945A

ited States Patent [19]

cassis

[11] Patent Number: 5,589,945

[45] Date of Patent: Dec. 31, 1996

5

COMPUTER-THEMED PLAYING SYSTEM

Inventor: **Max Abecassis**, 19020 NE 20 Ave., Miami, Fla. 33179

Appl. No.: **305,455**

Filed: **Sep. 13, 1994**

Related U.S. Application Data

Division of Ser. No. 2,998, Jan. 11, 1993, Pat. No. 5,434,678.

] **Int. Cl.**[6] **H04N 5/76**; H04N 7/10; H04N 1/00

] **U.S. Cl.** **386/83**; 348/7; 455/4.2; 386/110

] **Field of Search** 358/342, 335, 358/310, 311; 360/32, 13, 14.1; 340/825.31; 348/7, 6, 12, 13; 455/4.2

] **References Cited**

U.S. PATENT DOCUMENTS

4,605,964	8/1986	Chard	358/197
4,644,515	2/1987	Allebest et al.	369/32
4,701,896	10/1987	Allebest et al.	369/32
4,729,044	3/1988	Kiesel	360/14.3
4,871,903	10/1989	Carrell	235/375
4,872,151	10/1989	Smith	369/14
4,873,585	10/1989	Blanton et al.	358/33.5
4,930,158	5/1990	Vogel	380/5
4,930,160	5/1990	Vogel	380/23
4,949,187	8/1990	Cohen	358/335
4,972,396	11/1990	Rafner	369/32
5,057,932	10/1991	Lang	358/335
5,060,068	10/1991	Lindstron	358/185
5,109,482	4/1992	Bohrman	395/154
5,130,792	7/1992	Tindell et al.	358/85
5,172,111	12/1992	Ohvo, Jr.	340/825.31
5,175,631	12/1992	Juri et al.	358/335
5,280,462	1/1994	Yokogawa	369/30

Primary Examiner—Thai Q. Tran
Assistant Examiner—Robert Chevalier

[57] **ABSTRACT**

This invention relates to a video system comprising integrated random access video technologies and video software architectures for the automated selective retrieval of non-sequentially stored parallel, transitional, and overlapping video segments from a single variable content program source, responsive to a viewer's preestablished video content preferences. Embodiments of the video system permit the automatic transmission of the selected segments from a variable content program as a seamless continuous and harmonious video program, and the transmission of the selected segments from an interactive video game further responsive to the logic of the interactive video game. The viewer's video content preferences being stored in the video system, and/or in a compact portable memory device that facilitates the automatic configuration of a second video system. The system's controls also provide an editor of a variable content program the capability for efficiently previewing automatically selected video segments to permit the editor to indicate the inclusion of the selected segments in the program to be viewed by a viewer. The system further integrates fiber optic communications capabilities and the read/write laser disc player capabilities to facilitate the downloading of a variable content program from a source remote to the system.

12 Claims, 11 Drawing Sheets

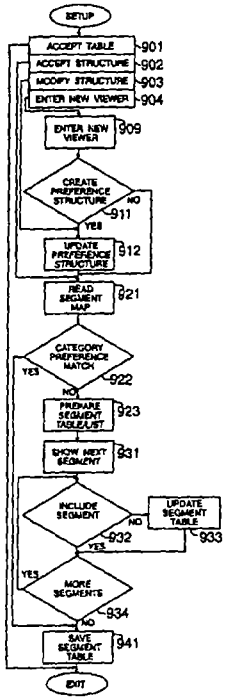

210

211 Code	Description	None	Implied	Explicit	Graphic
110	Profanity	1	2	3	4
212 130	Violence	1	2	3	4
135	Bloodshed	1	2	3	4
150	Monsters	1	2	3	4
170	Nudity	1	2	3	4
175	Sex	1	2	3 (219)	4

FIG. 2A

220

221 Code	Description	None	Minimal	Expanded	Extensive
210	Character	1	2	3	4
222 220	Location	1	2	3	4
230	Time	1	2	3	4
340	Detail	1	2	3	4
420	Expertise	1	2	3	4

FIG. 2B

230

231 Code	Description	Highlight	Summary	Condensed	Detailed
610	Inclusion	1	2	3	4

FIG. 2C

240

241 G	PG (249)	PG-13	R	NC-17

FIG. 2D

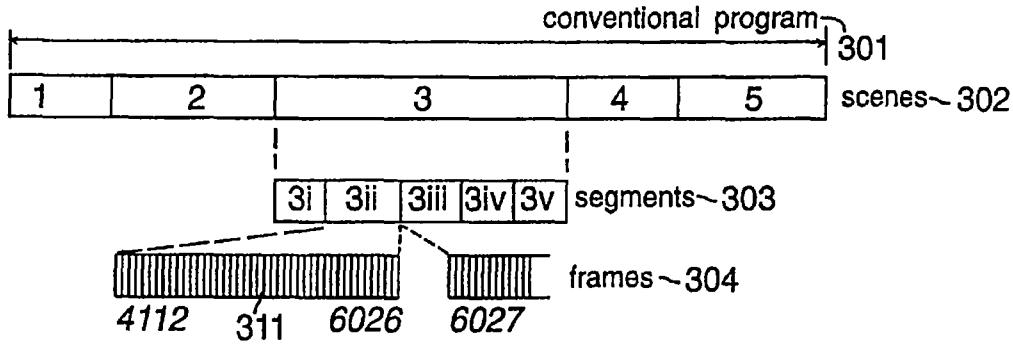

FIG. 3A

Code	Description	None	Implied	Explicit	Graphic
135	Bloodshed			3	

319

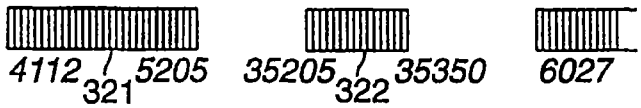

FIG. 3B

Code	Description	None	Implied	Explicit	Graphic
135	Bloodshed	1			

329



FIG. 3C

Code	Description	None	Implied	Explicit	Graphic
135	Bloodshed				4

339

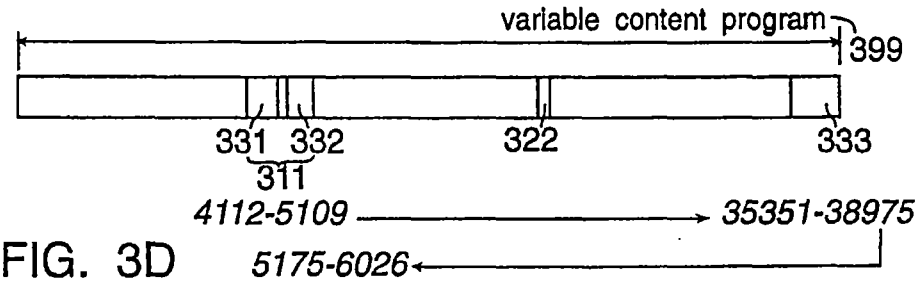

FIG. 3D

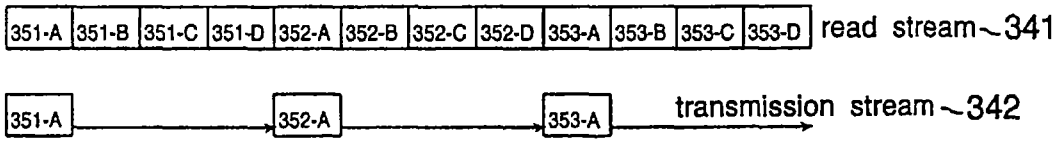

FIG. 3E

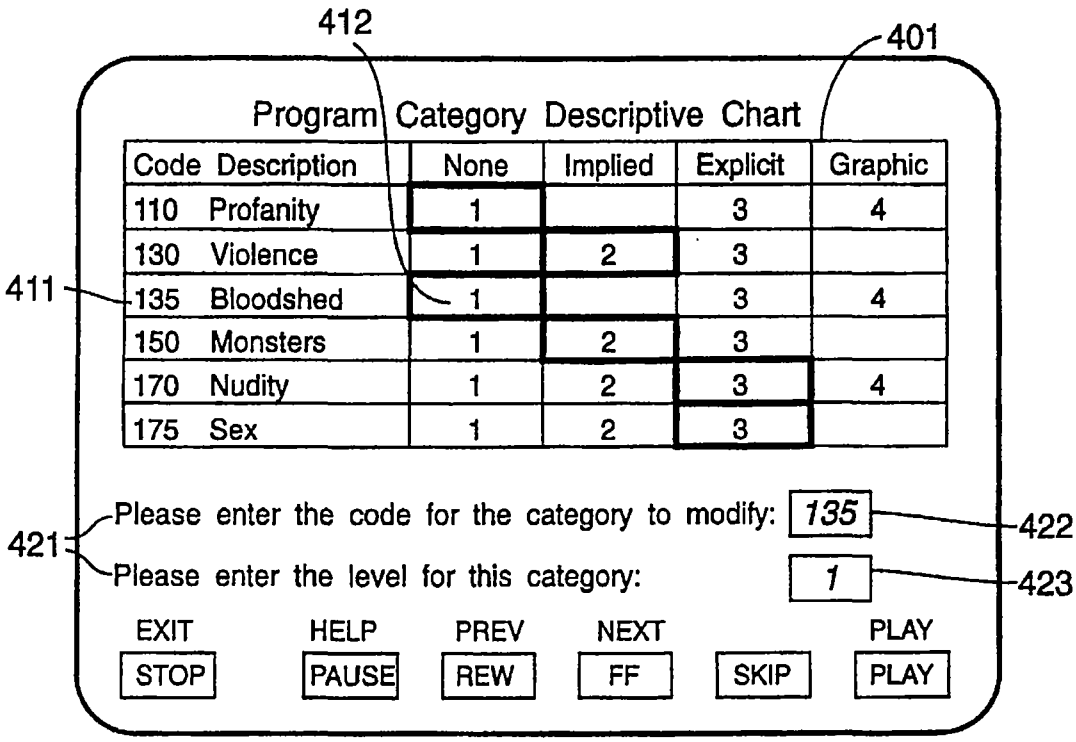
412
401
Program Category Descriptive Chart
Code Description
None
Implied
Explicit
Graphic
110 Profanity 1 3 4
130 Violence 1 2 3
411
135 Bloodshed 1 3 4
150 Monsters 1 2 3
170 Nudity 1 2 3 4
175 Sex 1 2 3
421
Please enter the code for the category to modify: 135
422
Please enter the level for this category: 1
423
EXIT
HELP
PREV
NEXT
PLAY
STOP
PAUSE
REW
FF
SKIP
PLAY

FIG. 4

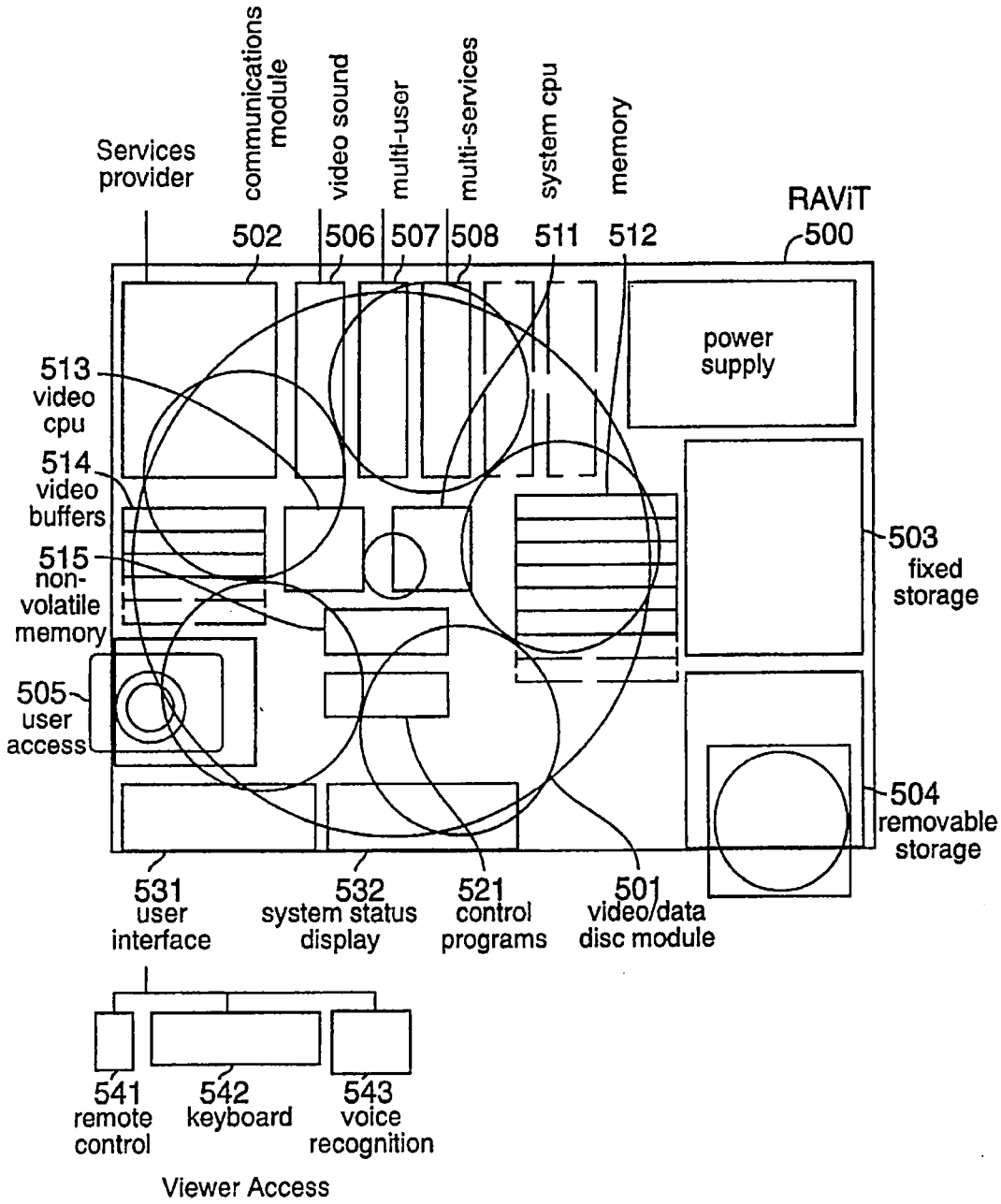
Services provider
communications module
video sound
multi-user
multi-services
system cpu
memory
502
506
507
508
511
512
RAViT
500
power supply
513
video cpu
514
video buffers
515
non-volatile memory
505
user access
503
fixed storage
504
removable storage
531
user interface
532
system status display
521
control programs
501
video/data disc module
541
remote control
542
keyboard
543
voice recognition
Viewer Access

FIG. 5

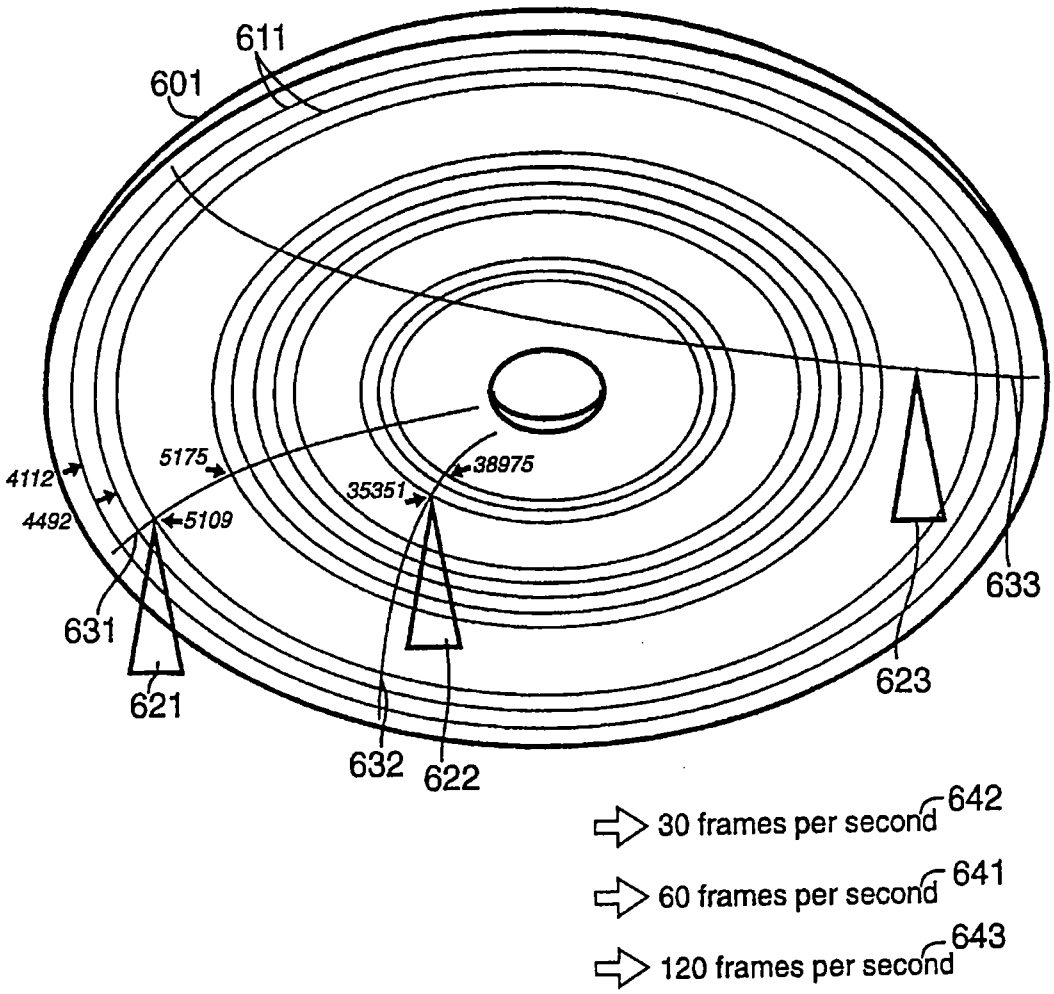
611
601
4112
4492
5175
5109
35351
38975
631
621
632
622
623
633
30 frames per second
642
60 frames per second
641
120 frames per second
643

FIG. 6

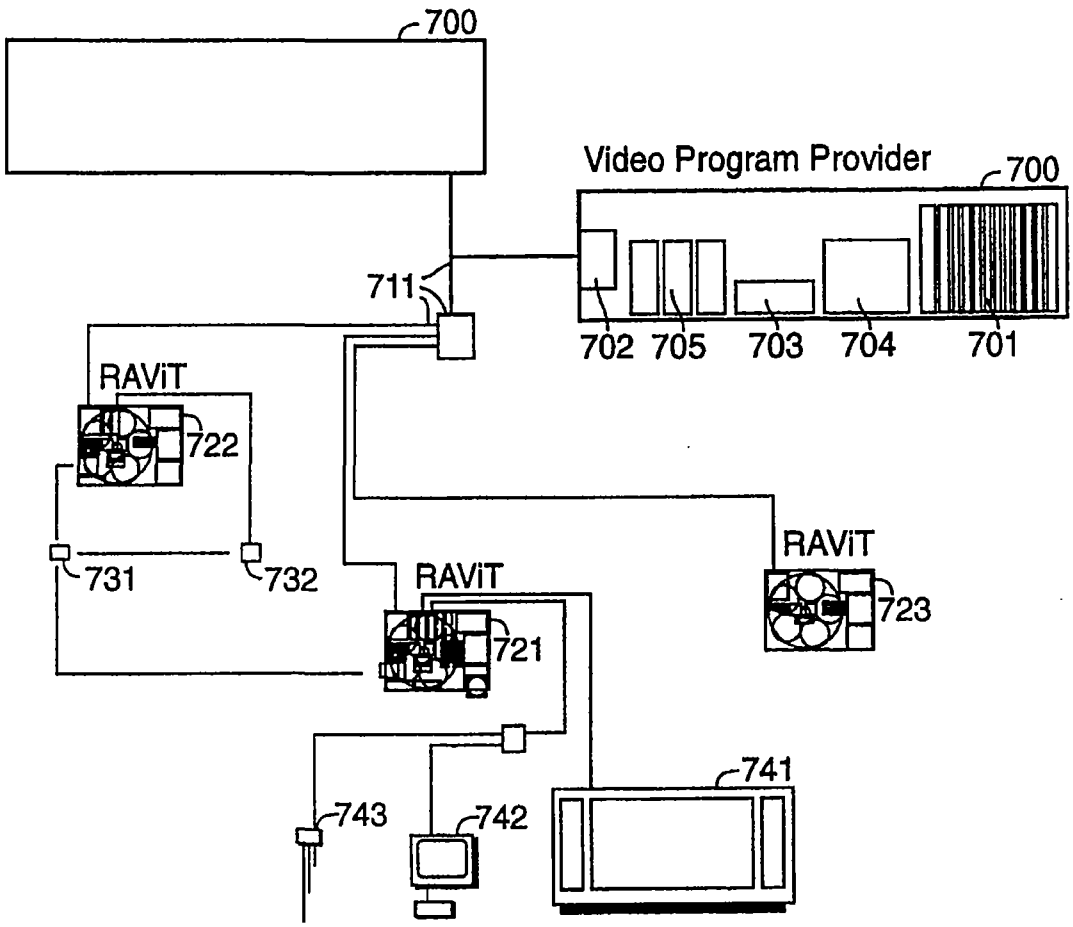
700
Video Program Provider
700
711
702
705
703
704
701
RAViT
722
731
732
RAViT
721
RAViT
723
741
743
742

FIG. 7

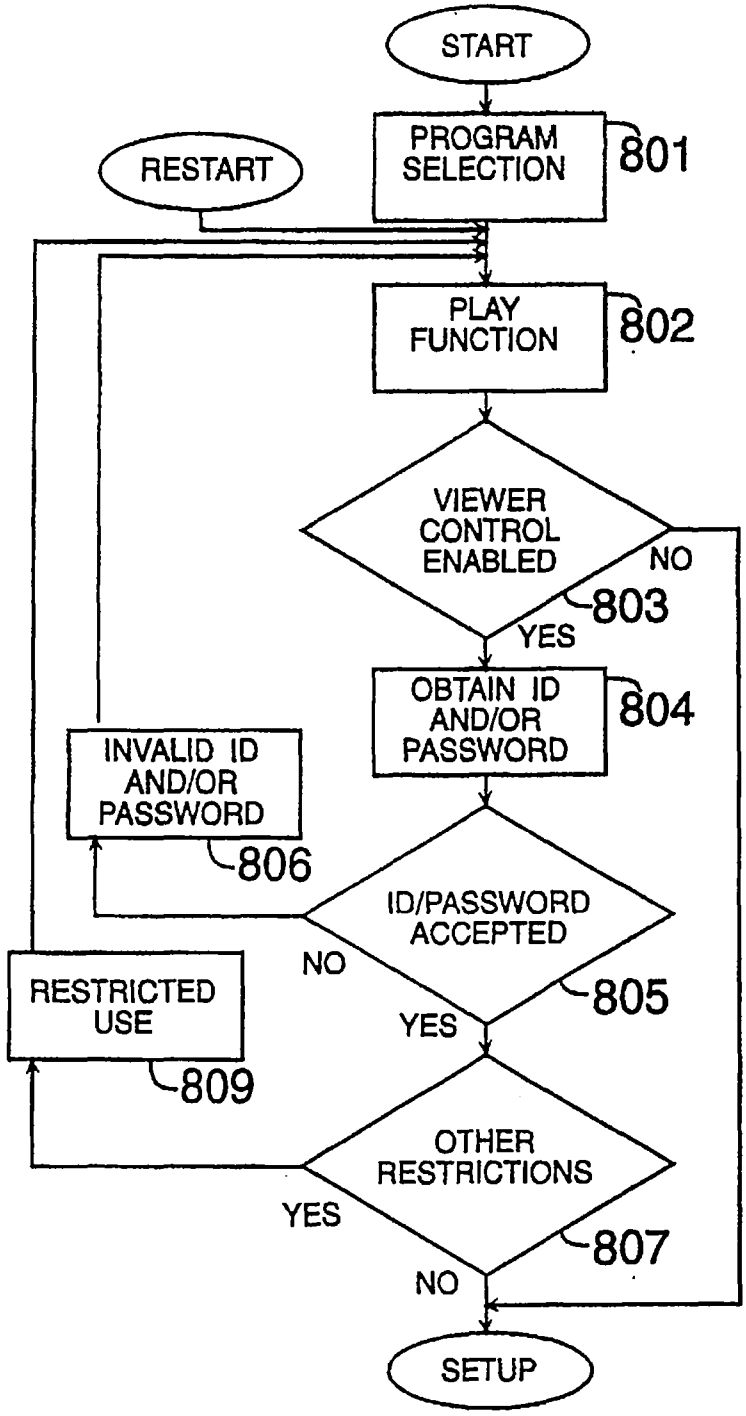
START
PROGRAM SELECTION
801
RESTART
PLAY FUNCTION
802
VIEWER CONTROL ENABLED
NO
803
YES
OBTAIN ID AND/OR PASSWORD
804
INVALID ID AND/OR PASSWORD
806
ID/PASSWORD ACCEPTED
NO
805
YES
RESTRICTED USE
809
OTHER RESTRICTIONS
YES
807
NO
SETUP

FIG. 8A

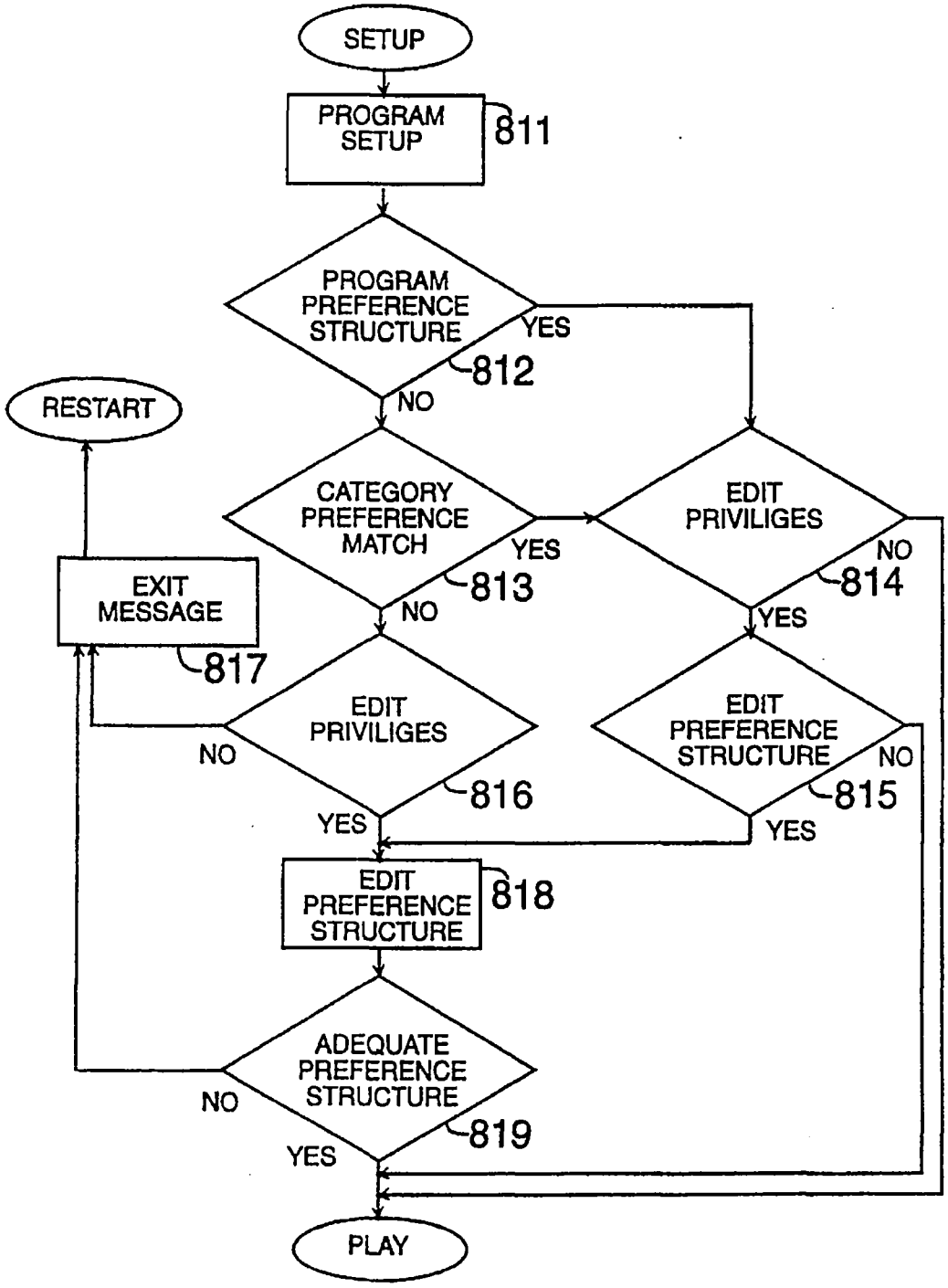
SETUP
PROGRAM SETUP
811
PROGRAM PREFERENCE STRUCTURE
YES
812
NO
RESTART
CATEGORY PREFERENCE MATCH
YES
813
NO
EDIT PRIVILIGES
NO
814
YES
EXIT MESSAGE
817
EDIT PRIVILIGES
NO
816
YES
EDIT PREFERENCE STRUCTURE
NO
815
YES
EDIT PREFERENCE STRUCTURE
818
ADEQUATE PREFERENCE STRUCTURE
NO
819
YES
PLAY

FIG. 8B

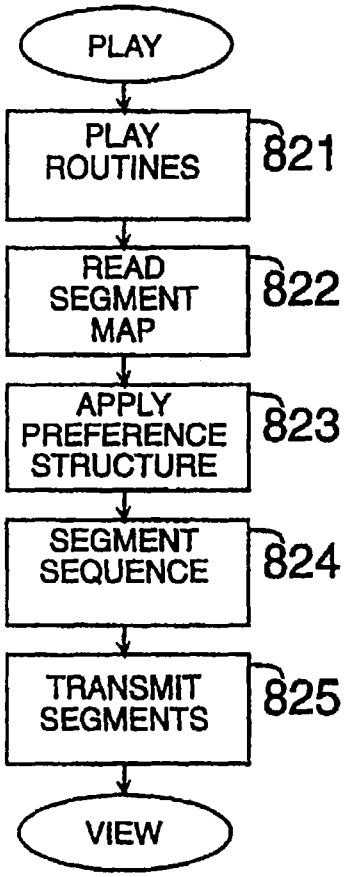
PLAY
PLAY ROUTINES
821
READ SEGMENT MAP
822
APPLY PREFERENCE STRUCTURE
823
SEGMENT SEQUENCE
824
TRANSMIT SEGMENTS
825
VIEW

FIG. 8C

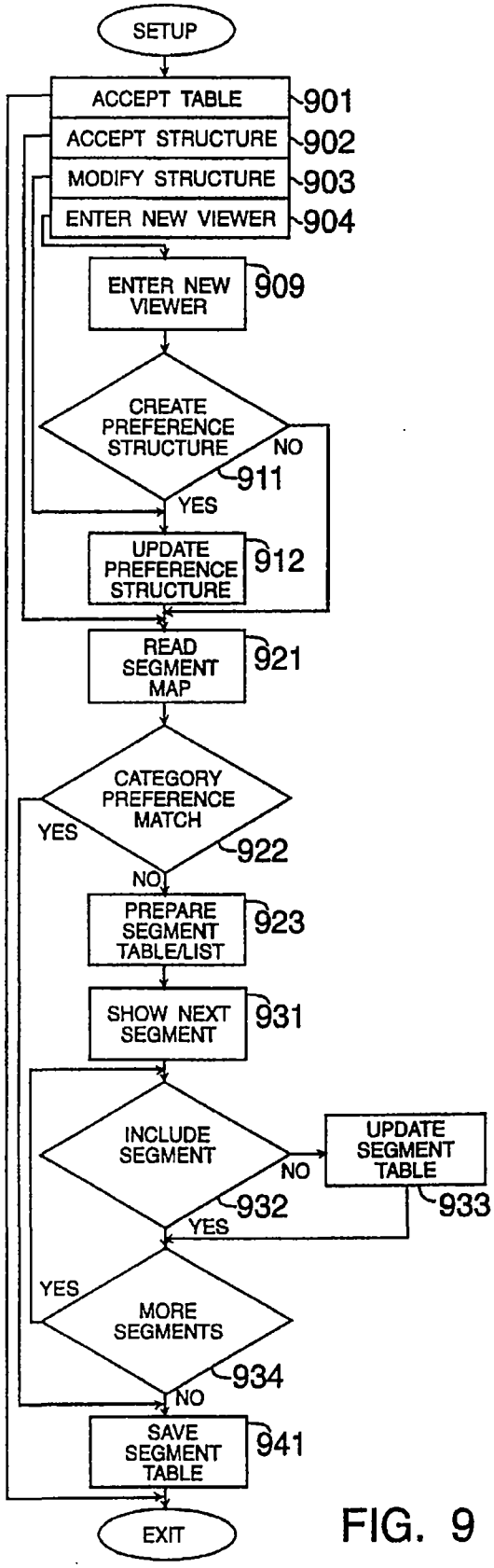
SETUP
ACCEPT TABLE
901
ACCEPT STRUCTURE
902
MODIFY STRUCTURE
903
ENTER NEW VIEWER
904
ENTER NEW VIEWER
909
CREATE PREFERENCE STRUCTURE
NO
911
YES
UPDATE PREFERENCE STRUCTURE
912
READ SEGMENT MAP
921
CATEGORY PREFERENCE MATCH
YES
922
NO
PREPARE SEGMENT TABLE/LIST
923
SHOW NEXT SEGMENT
931
INCLUDE SEGMENT
NO
UPDATE SEGMENT TABLE
933
932
YES
YES
MORE SEGMENTS
934
NO
SAVE SEGMENT TABLE
941
EXIT

FIG. 9

COMPUTER-THEMED PLAYING SYSTEM

This is a division of Ser. No. 08/002,998, filed Jan. 11, 1993, now a U.S. Pat. No. 5,434,678, issued Jul. 18, 1995.

BACKGROUND OF THE INVENTION

1. Field of the Invention

The invention relates to a video device for the automated selective retrieval of non-sequentially-stored video segments of a video program, from a single video program source, responsive to a viewer's preestablished video content preferences, and the transmission of the selected segments as a seamless video program.

2. Description of the Prior Art

Conventional memory storage devices, as for example, laser disc players and computer hard disks, when accessing or transferring data randomly located on the device's memory storage unit, the read/write functions of the device must wait for the proper positioning of the read/write head from one location to another location. This operation usually referred to as the average access time and measured in microseconds is one of the primary determinants of a random access device's performance capabilities.

In full motion picture applications a device's capabilities are also critical in terms of transfer rates and storage capacity. A typical motion picture runs at 30 frames per second. In digital terms, reasonable quality video, such as may be obtained from a VCR tape, requires approximately 1.5 megabytes per second, or a total of 10,800 megabytes for a two hour film. While the application of compression technologies reduces the storage requirements, this is offset by the greater requirements of high definition television (HDTV).

As a result of the storage capacity, transfer rates, and average access times, laser optical technology has proven its costs effectiveness in full motion picture applications. State of the art laser video disc systems, such as for example Pioneer's VDR-V1000, incorporates separate optical heads for recording and erasing, and provides an average access time of 0.3 seconds. While in most applications a 0.3 seconds average access time can be accommodated, this proves not be the case when a continuous seamless retrieval of random frame sequences from a single video source is required. A 0.3 average access time translates into a gap of 0.3 seconds (approximately 9 frames) each time a non-sequential frame needs to be retrieved. Where the viewing of a motion picture requires a significant number of such random accesses, the repeated gaps represent a significant failing.

Various data and video read and read/write architectures, such as those comprising: i) a single head; ii) multiple heads, in which each head operates on a different source surface; iii) multiple heads operating in one surface, in which each set of heads moves over the surface as a single unit; and iv) multiple heads, in which each head's movement over the shared surface and function is independent of the operation of the other heads; provide different average access time and transfer rate capabilities.

For example, the patent to Takemura et al., U.S. Pat. No. 4,744,070, discloses a tracking method for an optical disc in which two laser spots irradiate two adjoining slants of a V-shape groove. Since the laser spots movement over the disc surface are in unison, the shortcomings of access time gaps are not resolved.

With respect to the objects of the present invention, the shortcomings of the prior art known to the applicant are not limited to the hardware architecture. From the outset, film production has and continues to be directed at the eventual production of a unique linear sequence of frames.

In the creation of motion picture, producers and artists often surrender the exercise of creative expression to the inherent constraints of an unique linear sequence of frames, generally accepted norms, marketing objectives, and the censoring influence of the Motion Picture Association of America, Inc. rating system. In general, the resulting compromise inevitably provides for scenes, content, or artistic expression, which either exceeds or fails to satisfy individual viewer preferences. Too often, gains made in the exercise of creative expression result in the loss of potential audience. To that extent, recently a number of films are issued in an U.S. version, and a more explicit European version.

Viewers that are attracted by the general subject matter of a motion picture, and, on the basis of the MPAA's motion picture rating system, elect to view the motion picture are subjected to material in the program they would not have selected for their own viewing. In a 1989 poll conducted by the Associated Press, 82% of the respondents felt that movies contained too much violence, 80% found too much profanity, and 72% complained of too much nudity.

A number of editing systems in the prior art have attempted to address these issues. For example, the patent to Von Kohorn, U.S. Pat. No. 4,520,404, discloses a remote recording and editing system, whose functions include the activation or deactivation of a television receiver and a recording apparatus by the transmission of control or editing command signals, generated from a central station where an operator monitors a broadcast transmission. Similarly, the patent to Chard, U.S. Pat. No. 4,605,964, discloses a television controller that utilizes coding for identifying and automatically deleting undesirable sound and visual events broadcast with a program. The patent to Olivo, Jr., U.S. Pat. No. 4,888,796, discloses a screening device capable of automatically disabling the TV or video receiving device in response to the receiver's recognition of a non-interfering material content signal co-transmitted with the program signals. However, even the aggregation of Von Kohorn, Chard, and Olivo, fails to suggest a video software/hardware architecture wherein the disabling of segments of the program material does not produce dead segments.

The patent to Vogel, U.S. Pat. No. 4,930,160, addresses the resulting dead segments in the transmission by providing a facility for displaying alternative material during the dead segments. The alternative material selected during censorship periods can originate from a remote source, for example, another television broadcast, or locally, for example, from a video disc or tape player. However, Vogel and the prior art known to the applicant, do not provide a system that creates, from a single source, an automatically edited, seamlessly continuous program in which edited out segments are replaced with other parts of the same program responsive to a viewer's preestablished video content preferences.

The patent to Bohrman, U.S. Pat. No. 5,109,482, discloses and is titled "Interactive Video Control System for Displaying User-Selectable Clips". In Bohrman, it is the viewer that, with precise knowledge of the contents of the video segments of a program, interactively creates an arrangement of the viewer selected segments. In other words the segments are not automatically selected and arranged responsive to a

viewer's preestablished content preferences. Additionally, Bohrman fails to address the problems associated with the laser disc player's average access times.

A number of other interactive systems in the prior art provide viewers the means to participate, and thereby affect, the program's story lines or plot. The patent to Best, U.S. Pat. No. 4,569,026, discloses a video entertainment system where human viewers conduct simulated voice conversations with screen actors or cartoon characters in a branching story game shown on a television screen. As opposed to passive systems, the essence of interactive video systems is a viewer's participation. In interactive systems, at frequent points, the system's continued operation is dependent on the viewer's response.

In electronic games, of which Sega's CD ROM System for Genesis is an example, the access time of approximately one second results in noticeable pauses in the action, the effect of which is also mitigated by the interactive nature of the software. As a result of their interactivity, these systems can accept significantly slow random access times.

Further, as electronic games have been principally directed at children, or contain primitive subject matter, they have not dealt with issues raised by the more complex adult forms of expression inherent in contemporary motion picture films. While electronic games provide setup editing capabilities (selection of: level of difficulty, character, weapons, etc.), they do not provide censoring editing capabilities. This is clearly evidenced in the discussion, marketing, and development of video games dealing with material generally deemed not suitable for children. Given the random access capability of CD-based systems, it is surprising that when dealing with adult subject matter, the inherent limitations of conventional films and the MPAA's rating system have been adopted by forthcoming CD based video games.

Thus the prior art known to the applicant has failed to show an integrated software and hardware architecture that provides for the automated selective retrieval of non-sequentially stored video segments of a program, from a single program source, responsive to a viewer's preestablished viewing preferences, and the transmission of the selected segments as a seamless video program.

SUMMARY OF THE INVENTION

These and other shortcomings of the prior art are overcome by the various features of the present invention which are directed to a seamless transmission of non-sequential video segments. For purposes of the present invention, various terms or nomenclature used in the art are defined as follows:

The term "viewer" as used herein is meant to include and be interchangeable with the words "player" (when referring to a person), subscriber, and "user". That is, the term "viewer" ought to be understood in the general sense of a person passively viewing a video, interactively playing a video game, retrieving video from a video provider, and/or actively using multi-media.

The terms "video" and "video program" are interchangeable and refer to any video image regardless of the source, motion, or technology implemented. A "video" comprises images found in full motion picture programs and films, in interactive electronic games, and in video produced by multi-media systems. Unless otherwise qualified to mean a computer software program, the term "program" is interchangeable and may be replaced with the word "video". While a particular feature may be detailed with respect to a specified viewing, gaming, or computing application, it is intended herein to apply the teachings of the present invention broadly and harmoniously across the different classes of applications that generate a video output.

The terms "variable content program" and "variable content game" refer to a specific video program characterized by a greater variety of possible logical content sequences that result from the additional segments provided for that purpose. The term "content" referring principally to the form of expression rather than the story-line. Where initially produced as a variable content program, the video utilizes parallel, transitional, and overlapping segments to provide viewing of a program's story-line/interactive action at different levels of forms of expression.

The term "video content preferences" refers to a viewer's preferences as to the "content" of a video. "Video content preferences", specifically and principally, although not exclusively, refers to a viewer's preestablished and clearly defined preferences as to the manner or form (e.g. explicitness) in which a story/game is presented, and the absence of undesirable matter (e.g. profanity) in the story/game. In the broadest sense the term "video content preferences" further includes "video programming preferences", which refers exclusively to a viewer's preferences as to specific programs/games (e.g Sega's "Sherlock Holmes Consulting Detective"), types of programs/games (e.g. interactive video detective games), or broad subject matter (e.g. mysteries). In contrast to the prior art "video-on-demand" systems which are responsive to a viewer's "video programming preferences"; a more inclusive "content-on-demand" system as per the teachings of the present invention is responsive to a viewer's "video content preferences".

The term "seamless" is intended in the sense that the transmission of sequential and non-sequential frames is undiscernible to the eye, and not in the sense of the natural video seams that result in the intended changes from one scene to another, from one camera angle to the other, or from one gaming sequence to the other. In a seamless transmission of a variable content motion picture a constant video frame transmission rate is maintained, whether the frames are sequential or non-sequential.

The terms "B-ISDN", specifically referring to a broadband integrated services digital network, and "fiber optic", specifically referring to a network comprising fiber optic cable, refer to any "communications" means, private or public, capable of transmitting video from a remote video source to a viewer. In the broadest sense these terms further comprise satellite communications.

Where not clearly and unambiguously inconsistent with the context, these and other terms defined herein are to be understood in the broadest possible sense that is consistent with the definitions.

Accordingly, in view of the shortcomings of the prior art, it is an object of the present invention to provide a device comprising integrated random access video technologies and video software architectures that furnishes a viewer the automated selective retrieval of non-sequentially stored, parallel, transitional, and overlapping video segments from a single variable content program source, responsive to the viewer's preestablished video content preferences, and transmits the selected segments as a logical, seamless, and continuous video program.

It is another object of the invention to provide an interactive video game system comprising interactive video game software, variable content game, and a program segment map defining segments of the variable content game,

furnishing a player of the interactive video game the automatic and logical selection of video segments responsive to the application of the player's video content preferences to the program segment map, and responsive to the logic of the interactive video game software.

It is yet another object of the present invention to provide a device that furnishes a previewer of a variable content program the capability for efficiently previewing automatically selected segments from the program, responsive to a viewer's preestablished preferences, to permit the previewer to indicate the inclusion of the selected segments in the program to be viewed by the viewer.

It is yet another object of the present invention that a viewer's video content preferences be stored in a portable memory device.

It is yet another object of the present invention to integrate fiber optic communications capabilities and read/write laser disc player capabilities within a single device to facilitate the downloading of a motion picture program from a source remote to the device.

It is yet other objects of the present invention to provide a variety of reading architectures that produce a seamless reading of sequential and non-sequential segments of a variable content program from a single video source.

Briefly these and other objects of the invention are accomplished by means of the random access video technologies detailed herein in combination with the teachings herein of a variable content program.

Unlike traditional film media that permits a program format with only a single sequence of frames, random access video technologies make possible a variable content program format that is characterized by a variety of possible logical sequences of video frames. In a variable content program the artist and program producer are challenged to create greater variety in the form of expression, and utilize parallel, transitional, and overlapping segments to provide viewing of a program at that level of expression, content, detail, and length, that is consistent with a variety of viewer preferences.

In contrast to interactive motion pictures, and full motion video games, in a variable content program it is principally the form of expression that is the object of alternate frame sequences, rather than the story-line. In a variable content program, each of the significant scenes and actions can be implicitly expressed, as found for example in a "PG" rated film, explicitly expressed, as found for example in an "R" rated film, and graphically expressed, as found for example in an "NC-17" rated film. As a result, unlike motion pictures which are packaged as a single sequence of frames, the U.S. version, the European version, the edited-for-TV version, the "XXX" version, and the version addressing each viewer's particular tastes and preferences, reside harmoniously within a single variable content motion picture.

The present invention details a number of random access video technologies that permit the retrieval, in a logical order, of the non-sequential segments that comprise a variable content program without altering the transmission of the required frames per second. An embodiment of a video system as per the present invention, permits the automatic transmission of the selected segments from a variable content program as a seamless continuous and harmonious video program responsive to a viewer's preestablished video content preferences. In a second embodiment, segments from an interactive video game are selected responsive to the logic of the interactive video game software and the player's video content preferences.

In a laser disc video system, random access video technologies principally comprising: multiple independently simultaneously controlled reading units, video buffer, and media architecture, permit, in one embodiment, during the read operation of one of the reading units of the video information contained in a program source, the repositioning of a second one of the reading units to the next required non-sequential position in the program source. The resulting synchronization effectively eliminating the gaps that would result from a single reading unit's average access time. That is, pauses, gaps, dead frames, and fill-ins, are eliminated in the playing of non-sequential video segment stored in a single program source.

To achieve the automated selection of only those segments consistent with a viewer's preestablished viewing preferences, each program segment in a variable content program is defined by and is associated with a content descriptive structure that provides specific and detailed information as to each segment's subject matter, level of detail, and form of expression. The segments definitions of a program further comprises a first and last frame identifier, and beginning frame identifiers of the next logical segments. The segments definitions are organized into a program segment map.

A random access device as per the present invention provides each viewer the opportunity to preestablish both any number of generalized, personalized video content preferences, and program/event specific content preferences, identifying the viewing preferences in each of a number of content categories. By analyzing a viewer's preestablished video content preferences as they relate to a program's segment map, the random access device gains the information to automatically exclude segments of the variable content program containing material which the viewer does not wish to view, and to transmit as a logical seamless transparently harmonious and continuous program only those sequential or non-sequential scenes or segments of the program whose content and form of expression are consistent with the viewer's preestablished video content preferences. The playing of a variable content program does not require that the viewer preview the contents of the segments of the program, and does not require viewer intervention during the viewing of the program.

Thus, the present invention while challenging the video program producer to fully exercise the freedom of expression, provides for the automated, seamless transmission of non-sequential video segments containing that level of artistic expression that is consistent with a viewer's preestablished video content preferences. The present invention, effectively harmonizing what are regarded in the popular press as conflicting objectives, provides an unparalleled opportunity for "freedom of expression and freedom from expression" (C).

These and other features, advantages, and objects of the present invention, are more easily recited and are apparent in the context of the detailed description of the invention, accompanying drawings, and appended claims, that follow.

BRIEF DESCRIPTION OF THE DRAWINGS

FIG. 1 is a flow chart summarizing the steps of producing a variable content program as per the present invention;

FIGS. 2A, 2B, 2C, and 2D, are illustrations of video segment descriptive structures as per the present invention;

FIGS. 3A, 3B, 3C, are diagrams of three versions of a video segment and corresponding descriptive structures,

each segment a variation of the other as per the present invention;

FIG. 3D is a diagram representation of a variable content program showing the non-sequential arrangement of segments as per the present invention;

FIG. 3E is a diagram representation of a variable content program reading stream and transmission stream as per the present invention;

FIG. 4 is a sample video content preference selection screen as per the present invention;

FIG. 5 is a schematic diagram of a random access video technology device comprising fiber optic communications and variable content laser disc capabilities as per the present invention;

FIG. 6 is a schematic detail of a laser disc module's multiple reading units architecture as per the present invention;

FIG. 7 is a schematic diagram a video program provider and subscriber network architecture as per the present invention;

FIGS. 8A, 8B, and 8C, are flow charts summarizing the process of playing a variable content program as per the present invention; and

FIG. 9 is a flow chart summarizing the process of previewing flagged segments as per the present invention.

DESCRIPTION OF THE PREFERRED EMBODIMENT

The steps in the production of a variable content program are summarized with respect to the simplified flow chart of FIG. 1. Each scene or fragment of a scene on a video script is reviewed **130** according to an appropriate segment descriptive structure, as for example detailed with respect to FIGS. 2A–D. A screenwriter now has the freedom to expand the scenes by adding parallel, overlapping, and transitional segments, to cover a wider descriptive range **140** without the concern for the limitations inherent in first generation program formats. A successful filming **150** of this variable content architecture is a function of the skill of director(s), actors, animators, programmers, etc. to provide for parallel and transitional segments with the required transparent harmony.

In contrast to the editing of first generation motion pictures that require producing a unique linear sequence of segments, editing of this program format requires a parallel, non-sequential, logical arrangement of segments **160**. A segment assigned a category descriptor may be congruent in one or more frames with a segment assigned a different category descriptor. Where necessary, a video segment is associated with more than one audio segment, and corresponding separate voice and video category descriptors are provided. The editing of a variable content program is significantly distinguished from the editing of an interactive motion picture is that in the latter the editing is concerned with a branching story-line, while editing in the former is principally concerned with optional forms of expression of the same story-line.

The complexity of a variable content program/game is only limited by the requirements, desires, skill, and hardware/software available to the program editor. To that extent, it is intended that the editing functions, in particular, be assisted by integrated computerized editing resources. With respect to the computer assisted editing, the teachings of the patents to Bohrman, previously cited, and to Kroon et al., U.S. Pat. No. 4,449,198, are by reference incorporated herein. It should be appreciated that the art of program editing under this new format is intended to significantly transfer censorship, and time-constrained editing decision making from the producer/editor to the viewer.

As each segment is defined, the beginning frame and end frame in each of the relevant segments is identified, the segment content is assigned a category descriptor, and logical entry and exit references are assigned **170**. The resulting segment definition is mapped **180** and the required user interface produced. The program segment map, any user interface routines particular to the program, and player control codes, if required, are provided with the information comprising the programs video and sound.

FIGS. 2A, 2B, and 2C illustrate examples of generalized descriptive structures that are utilized to review the contents of each segment contained in a given program, and to assign the appropriate segment content descriptors. Specifically, FIG. 2A illustrates a descriptive structure **210** implementing a descriptive scale **211** that mirrors the current rating system utilized by the MPAA (Motion Picture Association of America, Inc.). The MPAA's "Voluntary Movie Rating System" comprises the symbols "G", "PG", "PG-13", "R", and "NC-17" and the corresponding legends, which are trademarked/pending by the MPAA.

The descriptive structure, further includes, in this example, a number of categories **212** of conventional concern in the popular culture. Each number in the matrix **219** in the chart represents the particular descriptor for a given category that can be assigned to a specific scene or segment. For example, a scene of an old western style barroom brawl might be assigned a 130-4 (graphic violence). While the absence of an element is presumed, unless otherwise indicated, as an example, the absence of bloodshed is assigned a 135-1 (no bloodshed).

The contents of a segment are further coded on the basis of a number of other considerations. FIG. 2B is an example of an element descriptive structure **220** utilized to analyze the development **221** of a number of elements **222** such as character, location, time, degree of detail, and the level of expertise appropriate for the segment. In a similar manner, an individualized, tailored, and descriptive structure may be provided for any one category or group of categories. For example, FIG. 2C illustrates a descriptive structure **230** utilized to classify segments according to a level of inclusion **231**. Such a structure is appropriate, for example, in coding a news report.

Additionally, or alternatively, a video segment descriptive structure, as shown in FIG. 2D, is implemented that incorporates the MPAA's movie rating system. Under this video segment generalized descriptive structure **240**, segment definitions are assigned a descriptor (rating) **249** from a descriptive scale **241** incorporating the MPAA rating symbols **249**, or any other available analogous rating system. Determination of each segment's rating symbol being similar to the manner in which the MPAA rating system is applied to a motion picture. While this rating scale **241** may be implemented in conjunction with categories, as detailed with respect to FIGS. 2A, and 2B, a simplified embodiment is not concerned with identifying the category, instead, the segment definition comprises frame information and a simple descriptor (rating).

It is noted that FIGS. 2A–2D are examples of an overall framework for segment analysis, the actual descriptive structures and level of complexity utilized may be highly tailored by the producer of a program to reflect the specific

content of a program without being limited by the structures which will be widely accepted, constitute a standard, and found to be generally utilized in other works. Each program producer is offered the flexibility within the overall architecture of this descriptive structure to determine and include only those categories that are relevant to a particular program, and to add categories as the producer requires. Similarly, the producer is offered some flexibility in determining the labelling of the descriptive scale.

Meeting the objectives of being able to provide both a standardized set of descriptive structures that permits the automatic application of a viewer's preestablished preferences to a variety of programs, and provides the producer of the program the flexibility described above, are accomplished for example by assigning unique classification codes to each set of preestablished standardized categories, and by reserving a range of classification codes that are recognized by the system as requiring additional selection by the viewer.

FIG. 3A illustrates an example of a conventional motion picture program in which the segments are arranged as a unique sequential arrangement of frames. In a variable content program adaptation of the conventional motion picture, the various scenes **302** of the program are, according to an evaluation of the contents of the scenes, divided into appropriate segments **303**. Each segment is identified with a beginning and ending frame and comprises any number of frames **304**. In this example, scene three is divided into four segments, in which segment **3*ii*** **311** begins at frame **4112** and ends at frame **6026**. The next segment, **3*iii***, begins at frame **6027**. Segment **3*ii***, which in a conventional motion picture contributes to an "R" rating for the program, includes frames depicting explicit bloodshed. The content of segment **3*ii*** **311** is indicated by the numeral 3 in the appropriate cell **319** of that segment's descriptive structure.

Referring now to FIG. 3B, to provide for the option of editing-out the explicit bloodshed in a variable content program, the program segment map includes an additional segment definition **321** beginning at frame **4112** and ending at frame **5205**. The end of this segment **321** is linked to a new transitional segment **322** beginning at frame **35205** and ending at **35350**, the end of which is linked to frame **6027**. In this fashion, frames are omitted and added to provide a continuous transparent edited version of any segment. This frame sequence **321/322** is associated with the corresponding segment content descriptive structure **329** to indicate the absence of bloodshed. In all other respects the segments **321/322** are equivalent to the original segment **311**. For first generation programs, the editing-out works in a like manner except that the transitional segment **322** is not available to make the seamless transmission from frame **5205** to **6027** transparent.

To provide for the option to include a graphic level of bloodshed, the program segment map includes an additional segment definition. Referring to FIG. 3C, in this case, only 66 frames of the "first" segment **311** are "ignored", and new segment definitions **331** and **332** are created, to accommodate the graphic bloodshed included in an additional segment **333** beginning at frame **35351** and ending at frame **38975**. This frame sequence **331/333/332** is associated with an appropriate segment content descriptive structure **339**. In this manner, parallel and transitional segments provide a descriptive selection mix ranging from a segment combination excluding bloodshed **321/322** to a segment combination including graphic bloodshed **331/333/332**, as well as the segment combination including explicit bloodshed **311**. As a result, the particular scene of which these segments are a part can be viewed at any of the three content levels for that category.

A scene can include subject matter of more than one category. In such cases, overlapping segments and transitional segments are provided to permit viewing of one subject matter at one descriptive level and viewing of another subject matter at another level.

Referring now to FIG. 3D, the location of the net additional frames that result from the additional segments **322/333** cause some frames to be non-sequentially placed in the variable content program **399**. Ignoring the frame numbers of segment **322**, FIG. 3D is illustrated to diagrammatically emphasize the resulting sequential and non-sequential random-like arrangement of video segments in a variable content program. This is shown for example, in the segment combination **331/333/332** depicting explicit bloodshed and the corresponding non-sequential frame sequence.

The segments combinations shown comprising the segment definitions together with the corresponding descriptors comprise a program segment map. A program segment map causes, for example, the retrieval of the segment combination beginning at frames **4112–5109**, followed by frames **353514–38975**, and ending with frames **5175–6026** in response to the application of a viewer's program content preferences to the program segment map.

In an actual feature length variable content motion picture the significant additional segment/frames are arranged responsive to the particular random access hardware architecture implemented. For example, FIG. 3E, illustrates an arrangement in which the reading unit reading stream **341** comprises alternating frames from four separate segments and is read at an effective rate of 120 frames per second. The processing architecture selecting the desired segment from the read stream **341** to generate a transmission stream **342** of the desired frames **351A–353A** at a rate of 30 frames per second. This and other architectures are detailed later on with respect to FIG. **6**.

A system embodying the teachings of the variable content program provides each viewer the opportunity to define a personalized video content preferences. The content preferences identifies each viewer's preferences in a range of video content categories. The architectures of a viewer's content preferences and that of the segment content descriptive structures are interrelated. As is detailed below, the preferences are established prior to transmission of the program to the receiver, so that during the transmission of the program viewer intervention is not required.

FIG. 4 illustrates a program's categories descriptive chart **401** that merges the various descriptive structures of the segments of a program. For example, the category bloodshed **411** indicates that the program offers options to omit the viewing of bloodshed, or include explicit or graphic segments in the viewing of the program. In this example, depicted by bold boxes is the viewer selected level for each category. The viewer in this case has elected to omit bloodshed **412** in his/her viewing of the program. In this particular screen design, viewers indicate their selections by following the entry requests **421**, and pressing the appropriate numeric keys on the player's remote control unit to indicate the category they wish to access **422** and the viewing level for the category **423**.

In simplified terms, any segment with a descriptive level higher (abstract) than the viewer-selected level for a given category is not included in the program produced for the viewer. The segment selected for viewing (a descriptive level equal to or next lowest) provides the next segment beginning frame information, skipping over parallel segments of a lower rating than the viewed segment.

While the teaching above are detailed principally in terms of a variable content motion picture movie, clearly the teachings are applicable to any video program. Specifically, interactive video games utilizing full motion video segments can also benefit from providing the viewer/player of the game the option to preestablish video content preferences in addition to the gaming options which may be included in the video game software. As in a variable content program, in a interactive variable content video game, the video segments shown are consistent with the player's video content preferences.

The preferred hardware architecture of a video system that embodies the teachings of, and delivers the benefits of, the variable content program is referred to herein as a Random Access Video Technology system ("RAViT") (C), and is specifically detailed with respect to FIG. **5**. Referring to FIG. **5** a preferred configuration of a RAViT **500** device principally comprises the following primary modules and sub-systems: i) random access laser video/data disc module **501**; ii) communications module **502**; iii) fixed memory sub-system **503**; iv) removable memory sub-system **504**; v) compact portable memory sub-system **505**; vi) external video/sound input/output support module **506**; vii) multi-user modules **507**; and viii) multi-services modules **508**.

A fixed memory sub-system **503** refers to any non-volatile memory storage device principally utilized to randomly read/write and store significant quantities of information. An example of a present fixed memory storage sub-system is a personal computer hard disk drive, currently generally installed in 80–240 MB capacities.

A removable memory sub-system **504** refers to any non-volatile memory storage device principally utilized to transport information to and from two similarly equipped devices. Examples of present removable memory storage sub-systems are personal computer floppy disk drives 1.2 MB, micro floppy disk drives 1.4/2.8 MB, backup tape drives 60–240 MB, and removable hard disks 20–80 MB. The random access laser disc module **501** is another example of a removable memory storage sub-system.

A compact portable memory sub-system **505** is principally distinguished from a removable memory sub-systems **504** in the size of the media and the greater variety of memory storage technologies that are generally implemented. Nonetheless, some of the removable memory storage media such as for example, the micro floppy disk, are also considered compact portable memory media. With present technology, compact portable memory media is available in dimensions similar to conventional credit cards. Examples of compact portable memory are: laser read/write cards, in which at least one surface of the card permits a laser to read/write information; electronic cards, in which the information is stored in electronic components; and magnetic cards embodying magnetic storage technology, of which a credit card is an example. Other examples of compact portable media are electronic cartridges commonly utilized in electronic video game systems.

Clearly, a variety of memory devices are available utilizing technologies and combinations of technologies to suit particular performance requirements. The above classifications of the memory devices are directed at bringing attention to functional capabilities of RAViT rather than to a particular technology. The classifications are not intended to restrict a device to a particular classification, limit the selection of devices which may be implemented, or to limit the function of the particular device implemented.

From a marketing standpoint, it is also preferred that RAViT additionally "play" other laser media, such as for example current laser discs, CDs, CDGs, photo CDs, and interactive programs and games, in a conventional manner. This being diagrammatically shown in FIG. **5** as the five circles inside the representation of the laser disc unit **501**. In this context, it is also noted that the multimedia capabilities in RAViT in combination with its ability to extract video/sound/data from these sources offers the user sophisticated CD-ROM like capabilities and interactive full motion video gaming capabilities. As to the latter, RAViT's hardware configuration detailed herein is significantly more capable than interactive CD-based video games such as for example Sega's CD ROM System for Genesis.

In a preferred embodiment, RAViT is a fully integrated viewing/gaming/computing video system. To that extent and given the other teachings that follow herein, RAViT's laser disc module will operate at the required rotational rate to accommodate differences in software rpm requirements. This being analogous to the different available speeds in a record player.

The external video/sound input/output support module **506** supports video/sound/data transmission to the primary video display system comprising for example a monitor/television, stereo system, and keyboard/voice recognition-response, Additionally, the input/output module supports video/sound input from local sources such as for example VCR's, video cameras, and videophones. The construction of the external support module follows the conventional practices of consumer electronic products as for example: laser disc players, VCRs, and personal computers.

Multi-user modules **507** principally support separate controlled independent access by other users of RAViT's processing, video, and communications resources. A multi-user operating system such as for example a version of Unix or Windows NT, manage the multi-user environment. The construction of multi-user modules following established networking technology and responsive to the operating system implemented.

Multi-services modules **508** provide a host of services, such as for example residential security, and appliance operation management. The operation of the module being principally a software application running under the multi-user operating system implemented. The construction of the particular multi-service module being responsive to the particular application. Example of a primitive multi-service module is a fax/modem pc card.

RAViT further comprises computing elements and video processing elements readily found in multimedia devices and video electronic systems such as for example and not limitation: i) microprocessor **511**; ii) memory units **512**; iii) video processor **513**; and iv) video buffers **514**.

RAViT's user control interface **531** includes communications to the buttons and keys located on the cabinet of the device, and to the associated control devices **541-2-3**. The keys, buttons, and switches, conventionally found in consumer electronic devices and deemed advantageous to the operation of RAViT are implemented. These controls are further augmented by the following keys/functions: segment skipping control, preferences control, segment mapping control, and system menu control. The user control interface **531** additionally supports infrared remote control units **541**, as for example infrared numeric control pad, and infrared keyboard; wire connected control units **542**, as for example cable connected computer keyboards, mouses, and game controllers; and voice recognition units **543**.

The keyboard, as in a personal computer implementation, facilitates system setup, keyword retrieval, and system func-

tions requiring the entry of alpha characters. Since a preferred configuration of RAViT comprises significant multimedia capabilities, a keyboard is advantageous. A keyboard connector used to connect a standard AT keyboard or a dedicated keyboard is supplied. Alternatively, an infrared-based keyboard is implemented. Further, given the computing and storage capabilities of RAViT, a voice response sub-system option accommodating minimally the few commands, such as play, stop, mute, sound, skip, required to control the basic operation of the laser disc module can additionally be provided.

Implemented in RAViT is a digital system status display sub-system **532**, which provides visual feedback and system status information.

RAViT's control programs that manage RAViT's resources, and the retrieval and processing of data and video information, reside in dedicated chips **521**. Alternatively, the control programs are stored in mass memory devices **503** from installed software, in removable memory media **504**, or in a compact portable memory device **505**.

A variable content program not only comprises variable content video/sound information, but also comprises a corresponding program segment map, user interfaces, program routines, and system control codes. In an interactive variable content video game, the video game software also comprises a variable content program. The terms "program segment map" and the term "data", where not inconsistent with the context, are to be understood to comprise the program segment map, user interfaces, program routines, system control codes, and gaming software (where applicable). Wherever the terms "variable content program" are found, and the context permits, they are to be understood to comprise all the video/sound and "program segment map" elements.

In a preferred laser disc implementation, the entire variable content program (video/sound and program segment map) is provided in a video/data disc in a format similar to that required by the video images contained in the disc. Alternatively, the data is provided in the video/data disc in a different format from that of the video format, such as for example in digital photomagnetic or magnetic formats. In this respect the teachings of the patent to Smith, U.S. Pat. No. 4,872,151, are by reference herein incorporated. In a second alternative, the data is separately provided by a removable memory media **504**, a compact portable memory device **505**, or downloaded by means of the communications interface **502**.

A RAViT simply configured and comprising a laser disc module **501** and for example a micro floppy disk drive **504** provides editing out benefits for the existing library of motion picture laser discs. In this configuration, the micro floppy disk provides the program segment map, user interface and other control programs particular to the motion picture, and stores a viewer's video content preferences. While the resulting program suffers, as does edited-for-television programs, from the lack of transitional, parallel, and overlapping segments, this technique provides an immediate library of full motion pictures to which the teachings of the present invention is applied.

Upon a playing of a program, the control program causes the reading of the program's identifier from the program source **501**, searches the mass memory fixed storage device **503** for a corresponding viewer preferences, or applicable generic preferences, and upon viewer confirmation applies the stored viewer preferences to the program segment map.

With respect to control programs, scheduling routines, viewer preferences, program segment map, and other principally software elements, it is noted that these may be separately or jointly stored in any one of RAViT's various firmware/hardware memory devices. For example, the viewer preferences are stored in non-volatile resident memory **515**, in the memory of the fixed or removable memory sub-system **503/504**, a user's optical read/write access card or electronic memory card **505**, or from the respective read/write video/data laser disc **501**. In an interactive video game application, data in general, and game software in particular, for example may be downloaded to the hard disk, reserving subsequent access of the laser disc for video/sound retrieval.

Generally, the control programs **521** generate a segment table reflecting the application of the viewer's preferences to the video program's content map. The segment table provides the control program's segment scheduling routines the information to cause the automated logical selection of sequential and non-sequential segments of the video program responsive to program segment map, the viewer's preferences, and the logic of the gaming software where applicable. The processing of the control programs being principally a function of the system cpu **511** and system RAM **512**.

RAViT's video random access retrieval architecture principally comprising the video/data laser disc module **501**, video cpu **513**, video buffers **514** and processing capabilities, provides for the retrieval and transmission of selected sequential and non-sequential video segments stored in the disc. In terms of the integration of laser disc and processing capabilities and the retrieval of non-sequential video frames, the teachings of the patent to Blanton et al, U.S. Pat. No. 4,873,585, which details a system comprising a video disc player for storing and retrieving video frames, and a control computer for accessing particular sequences of stored frames on the video disc, are by reference incorporated herein, and are relied upon to detail the core operation and construction of a laser-based random access system. With respect to laser read/write units and read/write laser discs, the prior art teachings of laser disc players, such as for example Pioneer's Rewritable Videodisc Recorder VDR-V1000, and the teachings of the patent to Matsubayashi, U.S. Pat. No. 5,132,953, are by reference incorporated herein.

RAViT's laser disc module **501** comprises laser disc technology distinguished principally in the cooperative operation, responsive to the instructions of the segment scheduler, of the multiple read/write laser units to produce a continuous transmission of non-sequential video segments. In a laser-based random access multiple read/write architecture, each read/write unit assembly and operation is principally equivalent to corresponding laser-based assemblies found in the prior art, in which a laser beam reads and reproduces memory signals from a disc.

Referring now to FIG. **6**, the principal elements of a laser-based random access multiple read/write units architecture as per the present invention are illustrated. FIG. **6** shows a laser disc **601** having therein, in a laser readable format, sufficient recording area **611** to store a variable content program. The recording area **611** of the laser disc **601** is shown as substantially concentric tracks lying in a single plane. Alternatively, the recording area comprises a multitude of quasi-concentric tracks forming one or multiple spiral tracks. Additionally, tracks can be provided in one or more planes on each side of the laser disc, as well as on both sides of the disc.

Referring now to FIG. **6** in conjunction with FIGS. 3C and 3D, in a preferred embodiment of reading non-sequential

video segments from a single video source, a first reading unit **621** is directed by the segment scheduler to retrieve video information corresponding to the desired frames **4112–5109** of a first, or current, video segment from a video source. Concurrently with the first reading unit **621** reading the information from the first segment, a second reading unit **622** is positioned, according to the program segment map and the segment scheduler, to preread within one revolution of the disc beginning frame information of a next non-sequential segment from the same video source.

In this example, the next non-sequential segment begins at frame **35351**. Concurrently with the first reading unit reading **621** the current segment, the second reading unit **622** is caused to preread into a video buffer (**514** FIG. **5**) that portion of the next non-sequential segment beginning at frame **35351** necessary to provide a seamless transition from the first reading unit reading of the current segment ending at frame **5109** to the second reading unit reading of the next non-sequential segment beginning at frame **35351**. The video buffer, thus containing the segment information necessary to provide a synchronized, seamless transition from the first segment to the second segment without any gaps in the transmission of the retrieved video segments as a continuous video program.

Concurrently with the second reading unit **622** reading the next non-sequential segment, now a current segment, the first reading unit **621** is repositioned to begin prereading of a next non-sequential segment beginning at frame **5175**. By the time the second reading unit **622** completes reading the current segment at frame **38975**, the first reading unit **621** has preread frame **5175**. The process, analogous to a relay race, repeating itself until the last desired segment has been read.

In an interactive video game application, a multiple reading unit architecture is advantageously utilized to additionally provide faster video responses to the user/player's actions. Briefly, while a first reading unit **621** is reading a first video segment, frames **4112–5109**, a second reading unit **622** is positioned to read a second segment beginning at frame **35351**. The positioning of said second unit **622** being responsive to the option being presented to the player during the reading of the first segment which may require reading the second segment rather than continuing reading the first segment or reading the next sequential segment. Alternatively, the second reading unit provides overlay images in synchronization with the images retrieved by the first reading unit.

Each reading units's movement over the disc surface is over a designated radial segment such that the movement of each reading unit over the recorded radius of the disc is not impaired by the movement of a different reading unit. In this fashion, the movement of the first reading unit **621** over its radial segment **631** does not intersect the movement of the second reading unit **622** over its radial segment **632**.

It is noted that the reading unit's travel need not be limited to the radial segments. A positioning system providing for the positioning of the reading unit at any point over the recording media, provides the reading unit the potential to precisely intercept the beginning of a segment/frame at a precisely defined moment. This being represented in FIG. **6** as the juncture of a radial segment **631** and the beginning of frame **5175**. In this fashion the requirement of prereading into a video buffer can be reduced if not eliminated.

FIG. **6** also shows a third reading unit **623**. While a simple variable content motion picture application does not require more than two reading units, the third reading unit **623** is illustrated principally to emphasize that a multiple-read architecture is not limited to two reading units **621–622**, and is available for more demanding interactive variable content game applications. Further, as illustrated, a reading unit's movements over the recorded surface need not be confined to a particular quadrant, side of the surface, or radius of the surface. In the illustration the third reading unit's **623** movement over the recorded surface is permitted over the recorded diameter **633** of the surface.

Additionally or alternatively, the information is recorded on the laser disc in a manner that, either through placement or duplication of frames, anticipates the desired and possible position of a reading unit. In this case, even if the movement of the reading units are confined to radial segments, the requirement of a video buffer is for this purpose eliminated. This also being represented in FIG. **6** as the various junctures of the radial segments and the beginning of the frames.

Specifically, in this architecture, concurrently with a first reading unit **621** reading a current segment from a single video source, a second reading unit **622** is positioned to be able to intercept and read the beginning of a next non-sequential segment, in this example frame **35351**, at that instant that the first reading unit **622** completes reading the current segment at the end of frame **5109**. At that the first reading unit **621** completes reading frame **5109**, the second reading unit begins reading frame **35351**, thereby in combination with the first reading unit causing a seamless transition from the reading of the current segment to reading of the next non-sequential segment.

In the next stage, concurrently with the second reading unit **622** reading the beginning of the next non-sequential segment at frame **35351**, now a current segment, repositioning the first reading unit **621** to be able to intercept and read the beginning of a next non-sequential segment, frame **5175** at that instant that the second reading unit completes reading the current segment at frame **38975**. The process continuing until all the required segments are read.

Still additionally, or alternatively, the rotational speed of the disc platter is set sufficiently high to permit the reading unit to read into buffers sufficient video information to provide the same reading unit sufficient time for repositioning and begin reading the next non-sequential segment before the video information in the buffer is exhausted. This would in certain applications eliminate the need for multiple reading units.

Specifically, in the reading of non-sequential video segments from a single video source, a single video source **601** is caused to rotate at a sufficiently high rate **641**, in this example 60 frames per second or 3,600 rpm **641**, i.e twice the rate of 30 frame per second **642**, to permit a reading unit **621** to both read and preread an amount of a current segment (frames **4412–5109**) into a video buffer sufficient for the reading unit **621** to be repositioned to read the beginning of a next non-sequential segment, frame **35351**, before the preread amount in said video buffer is exhausted. In this example, prereading frames **4498–5109** provides the reading unit **621** sufficient time to be repositioned to read a next non-sequential segment, frames **35351–38975**. Concurrently with the repositioning of the reading unit, the video buffer provides the last preread frames **4498–5109** to cause a seamless transition from the reading of the current segment, frames **4112–5109**, to the reading of the next non-sequential segment, frames **35351–38975**. The process continuing until all the required segments are read.

In this architecture, the reading unit prereads into the buffer only in advance of a next non-sequential segment, or

continually prereads into the video buffer as the video information in the buffer is depleted.

A variation of this technique particularly applicable to interactive video game applications is detailed with respect to FIG. 3E. In this example, previously summarized, a read stream comprises alternating frames from a number of different video segments. The number of different video segments resulting from the attainable effective transfer rates of the system. For example if the video application requires a transfer rate of 30 frames per second, and video compression techniques, rotational speed, and/or reading capability of the system can achieve an effective transfer rate of 120 frames per second, than four different video segments can be read "concurrently" by a single reading unit. In such an architecture, the frame arrangement comprises a reading stream 341 of alternating frames from four separate segments A–D and is read at an effective rate of 120 frames per second. The processing architecture selects the desired segment A,B,C, or D from the read stream 341 to generate a transmission stream 342, at a rate of 30 frames per second, of the desired frames 351A–353A, 351B–353B, 351C–353C, or 351D–353D.

To further detail, and with respect to FIG. 6, a single video source 601 is caused to rotate at a sufficiently high rate, for example 60 frames per second 641 or 120 frames per second 643 to permit a reading unit 621 to read at multiples of the 30 frames per second rate required to transmit a single one of a plurality of video segments (A–D). Referring once more to FIG. 3E, the frames being intermittently arranged as a reading stream 341 in the video source. As the reading unit is caused to read the reading stream 341; a video processor (513 FIG. 5) extracts from the reading stream 341 a transmission stream 342 representing a single one of the plurality of video segments.

In this fashion a single reading unit can provide instantaneous shifting among a number of different segments. In an interactive video game application, shifting among a number of different video segments can be instantaneously achieved in response to a players interaction with the game's software logic.

To enhance the simulation of each video stream, a windowing technique, such as shown in the previously cited patent to Blanton et al., in which only a portion of each frame is displayed, is applied to each frame in one or more of the video streams to enhance the simulation of movement within a multi-dimensional space and to provide composite images of greater complexity.

These and other variations in the particular number and arrangement of the reading units, video buffer, and frame arrangement configuration that is implemented in a RAViT is a function of the complexity of the video/data, and cost/performance constraints. It is also intended that the teachings of the various configurations shown herein and in the cited art may be combined responsive to the particular application. Clearly, with technology continuously achieving greater storage capacity in smaller, faster, and more cost effective storage devices, there is no apparent limitation to the complexity of the variable content program that can be commercially executed.

The description above has for simplicity been detailed with respect to a reading unit. It is to be understood that a reading unit herein comprises both reading and writing capabilities operationally independent of the operation of another read/write unit in the system's architecture. Additionally, a read/write unit need not be limited to a particular current architecture, enhancements to the construction of the reading unit itself, such as for example multiple tracking mirrors/beam splitters, are contemplated to produce faster access times and transfer rates. Further, the multiple read/write architecture detailed need not be limited to a laser disc system. In an alternate embodiment, a hard disk drive is modified as per the teachings above detailed to significantly increase transfer rates and lower average access times. Clearly, at present, in a hard disk embodiment the read/write units are magnetic read/write heads.

Generally, the viewing of a variable content program is intended to be hardware independent. That is, a variety of hardware, firmware, and software architectures are possible either locally or remotely accessible by the viewer that provide the benefits of a variable content program. In particular, a random access device's read/buffer architecture, modified as per the present invention, is intended to be implemented in a variety of mass memory devices. Embodiments of the read/buffer architecture detailed herein is not intended to be limited to any particular available recording medium and recording format technologies. The teachings of the present invention are applicable to a number of random access technologies such as, for example, and not limitation, fixed and removable magnetic, optical, or photomagnetic media, and digital or analog recording formats. Any combination of existing or forthcoming media, format, and compression memory technologies may advantageously incorporate the teachings herein detailed.

In general, parts, sub-assemblies, and components of a RAViT are of conventional characteristics and are freely substituted by like functioning elements and components. For example, and not limitation, while fiber optic-based communications are preferred, copper phone lines and coaxial cable-based communications are considered, albeit less capable nonetheless, functional equivalents. Additionally, a certain degree of redundancy of components is illustrated in FIG. 5 to schematically show and detail significant functions. Clearly, redundant components in general, and redundant electronic components in particular, are intended to be eliminated in a preferred embodiment. For example, in a number of configurations a removable memory sub-system and a compact memory sub-system are both required. In a general sense, one is the functional equivalent of the other. In a preferred embodiment, for example, a removable memory sub-system is eliminated, and the compact memory sub-system performs the functions that are associated with it. In general, where cost effective, components are designed to serve a combination of functions.

Further, the configuration of RAViT's various modules, components, and sub-systems, are intended to offer flexibility analogous to that found in a personal computer. Specifically with respect to the multi-user capabilities, a RAViT may be configured, for example, with more than one laser disc module. Whether inside the primary cabinet or in a mating or sister cabinet. Responsive to user friendliness, a more advanced wireless plug and play communications and power motherboard and cabinet design is preferred. The motherboard and cabinet permitting the replacement of, for example, the power supply just as easily as a battery is replaced in a portable personal computer. In a preferred embodiment of RAViT, every component and sub-system is replaced without resorting to screwdrivers and the need to unplug and plug communications and power cables.

While an embodiment of the present invention is detailed above with respect to a random access video laser disc device physically accessible by the viewer, variations are also possible. For example, the laser disc device need not be

physically located near the television set. The patent to Fenwick et al. U.S. Pat. No. 4,947,244, by reference incorporated herein, discloses remote video distribution systems such as may be found in a hotel, wherein the viewer is provided remote controlled access to video resources. Fiber optic communications easily permit the required transfer rates between a device, or any alternative memory device, and a viewer's receiver/television.

As shown by the hardware configuration detailed with respect to FIG. **5**, RAViT is equally adept at retrieving full motion video from a resident program storage device or remotely from a network-based service provider. A B-ISDN interface, an internal or external modem, or a dedicated communications line, such as for example a coaxial cable, provides RAViT communications capabilities with providers of programming and other on-line services. These other services comprising, for example, banking, security, shopping, instructional, and educational services.

With respect to video-on-demand, and video networks, the teachings of the patents to Monslow, U.S. Pat. No. 4,995,078, to Way, U.S. Pat. No. 4,891,694, and to Walter, U.S. Pat. No. 4,506,387, are by reference incorporated herein. These patents teach a variety of land line and fiber optic transmission of programs embodying varying degrees of viewer capabilities in the selection of programs. While the prior art does not teach transmission of a variable content program, a reading of said art will assist the reader interested in obtaining a more detailed disclosure of the hardware of such systems than is necessary to provide here.

FIG. **7** is a simplified schematic diagram a video program provider and subscriber network architecture as per the present invention. Participants in a B-ISDN **711**, as per the present invention, comprise any number of video program providers **700** and any number of subscribers **721**. As in a communications network, each participant is able to transfer and retrieve video/data transmissions from any other participant. Each participant obtaining a hardware configuration consistent with their desire and their financial means.

The particular configuration of each subscriber's video system's **721/722/723** storage, memory, processing, and communication capabilities is responsive to, but is not necessarily limited by, the minimum requirements of the particular service provider. A RAViT configuration, such as detailed with respect to FIG. **5**, provides the required video program storage, processing, and communications architecture.

The video system of a participant who wishes to serve as a video program provider **700** is functionally equivalent to the RAViT device previously detailed, differing only in that the respective resources are appropriately scaled and modified to simultaneously access a variety of programs, and service a number of subscribers.

A video provider system **700** comprises: i) mass storage random access memory devices **701** for storing a plurality of variable content programs, and a plurality of program segment maps each defining segments of a corresponding video program; ii) communications linkages **702** to the B-ISDN for establishing communications with a plurality of participating subscriber video systems (RAViTs) **721/722/723**; iii) processing hardware/software **703** for retrieving from participating subscriber video system a subscriber's video content preferences, and for automatically selecting, for each of the participating subscribers, variable content program/program segment map, and/or segments, from a programbase, comprising a plurality of variable content programs and corresponding program segment maps, responsive to the application of the corresponding one of the subscriber's video content preferences to the programbase; iv) random access devices **704** for retrieving for each participating subscriber the corresponding selected variable content programs and/or video segments; and v) transmission architecture **705** for transmitting, to each participating subscriber video system, the corresponding retrieved selections. Simply stated, an on-line variable content program provider provides each viewer content-on-demand.

In a preferred embodiment, in response to a subscriber **721** request of one or more variable content program(s) from a video provider **700**, the entire variable content program including all the parallel, overlapping, and transitional segments is provided via the fiber optic network **711**. Alternatively, the program is provided to the subscriber in the form that results from the execution of the viewer's video content preferences, i.e. a logical seamless sequence of only those segments that are consistent with the viewer preferences are transmitted in a real-time or a non real-time format over the network **711**.

Where the subscriber **721** remains on-line with the video provider **700** during the transmission of the video and utilizes the hardware resources of the video provider, a RAViT comprising principally communications capabilities without significant local storage, processing, or memory, is adequate. In such an architecture the viewer preferences are retained by the video provider.

Retrieving video from a remote video provider permits subscribers to efficiently obtain from an extensive programbase a program to be viewed at the time of their choosing, over which they exercise complete control as to the subject matter, form of expression, and other elements comprising the program. Further, the resulting program need not comprise or result from a single variable content program in a programbase. A program may result from the automated selection of a variety of segments/programs from the programbase.

In a video provider, the implementation of the multiple read head architecture provides for the simultaneous retrieval of several versions of a program from a single program source to satisfy simultaneously the particular viewing requirements of several subscribers. A multiple read head architecture reduces, for example, the number of copies of a program that the on-line video provider requires. Alternatively, where cost effective, a variable content program may be entirely or partially stored in RAM.

It is also important to note that the novel combination of an external fiber optic based communications module and a multiple read/write units laser disc module, provides a RAViT configuration capable of efficiently downloading significant amounts of full motion video to be viewed, played with, or processed at the subscriber's leisure. In such a RAViT the downloading of, for example, a feature length motion picture, an interactive video game, or a series of lectures can be achieved with unprecedented speed.

The previously shown capacity to read/write the viewer preferences from/to a compact portable memory device **731** provides a viewer the means to automatically configure a RAViT that had not previously learned the viewer's video content preferences (dumb RAViT).

Referring once more to FIG. **7**, in anticipation of the desire to efficiently utilize a dumb RAViT, a viewer instructs the smart RAViT **721** to download to a compact portable memory device **731** the desired viewer preferences and program request routines. To automatically configure and retrieve programming consistent with the preferences and

program request routines, the viewer provides the prepared compact portable memory device **731** to the dumb RAViT **722**, or to an accessory device **732** in communication with the dumb RAViT **722**. The compact portable memory device **731** automatically configuring the dumb RAViT without necessarily downloading the viewer preferences other than to volatile memory. The operation being similar to moving a game cartridge from a first game player to a second game player.

In this context, programming request routines automate the retrieval of desired programming from a programming services provider **700** accessible to a RAViT **722**. In this fashion, for example, a travelling executive can automatically configure each days new hotel room RAViT to retrieve videophone messages, the day's news in a format and for topics preestablished by the executive, followed by a menu of recently released films that the executive has not seen. The operation being analogous to inserting an access card in a hotel room door.

Alternatively, a similar automated configuration is performed by means of line-based external communications capabilities **711** available to both the dumb RAViT **722** and the smart RAViT **721**.

As indicated with respect to FIG. **5**, and represented in FIG. **7**, multi-user and multi-services modules support separate controlled independent access by other users of RAViT's processing, video, and communications resources. In addition to the primary video display system **741** supported by RAViT **721**, the multi-user module and multi-services module installed in this example support a separate monitor/keyboard **742** access to RAViT's **721** resources, and cooperatively supports the operation of a security system **743**.

Before proceeding with a detailed description of the steps of utilizing a variable content video disc on RAViT, it is important to appreciate that in general following the initial setup of RAViT with a viewer preferences, a subsequent viewing of a variable content program conforming to the standard structure only requires the pressing of a play key. Following the pressing of the play key, RAViT automatically initiates playing of the video program without the necessity of any further viewer interaction or instructions. In other words, in a standardized descriptive structure architecture, once RAViT initially learns the viewer's preferences, it does not require any more of the viewer than, for example, a conventional laser disc player. Similarly in the playing of an interactive variable content game, once RAViT initially learns the viewer/player preferences, the gaming interaction proceeds transparently of the video editing functions. It is intended that a single viewer preferences serve both gaming and viewing applications. Optionally, the viewer may establish separate viewing preferences for each of the classes (e.g. gaming, viewing, computing) of video programs.

The steps comprising the method of viewing a variable content program on a RAViT are detailed with respect to the flow chart of FIGS. **8A**, **8B**, and **8C**. Beginning at step **801**, the viewer selects and retrieves the desired program consistent with the architecture of the particular RAViT hardware implementation. Upon selection of the play function **802**, RAViT's software, firmware, and hardware processing capabilities ("processor") issue a command to read the viewer control setup to ascertain if viewer control is enabled **803**. If enabled, RAViT's handshaking routines request viewer identification and, if required, a corresponding password **804**. If the viewer identification and password are not found acceptable **805**, the appropriate error message is transmitted to the television **806**, and RAViT is returned to a state prior to the viewer play request **802**.

If viewer identification and password are found acceptable **805**, the processor checks for other restrictions to a user access **807**. These additional restrictions include: time of day restrictions for the user, and/or accumulated usage during specified time frames. If restrictions are enabled that prevent usage **807**, an appropriate error message **809** is transmitted to the television, and RAViT is returned to a state prior to the viewer play request **802**. The user-permission capability enables a parent to have complete control over the use of RAViT, and provides for multiple individualized preferences.

If viewer control is not enabled **803**, or if enabled, verification of the user **805** and verification of restrictions permit usage **807**, program setup routines are initiated. Referring now to FIG. **8B**, program setup routines **811** include reading, from the program source, program identification information. Based on the program identification information, which in addition to including a unique identification code also contains qualitative and classification program information, setup routines search to see if a corresponding viewer preferences/table for the identified program is available **812**. Otherwise, the program category descriptive structures **813** are obtained from the program source to determine if a viewer preference is established for each of the program categories.

Once viewer preferences are established, the processor verifies set up status for editing privileges **814**, to determine if the viewer has editing privileges for the class of programs to which the present program belongs and the categories included therein. The processor at this point transmits to the television a request for the viewer to indicate if the existing preferences are to be edited **815**. If at step **814** edit privileges are not available for the viewer, the processor initiates normal play routines. If the viewer indicates that no editing privileges are to be exercised **815**, normal play routines are initiated as well; otherwise, editing of the viewer preferences occurs at step **818**.

The edited viewer preferences are interactively verified **819** until an adequate category preference match, as required by the program and the user is established, or the viewer selects to exit. Exiting at **819** returns RAViT to a state prior to the viewer play request **802**.

If a viewer preferences for the login viewer for the selected program is not available **812**, or at least one of the categories of the program is not contained in the viewer preferences **813**, then the processor verifies if edit privileges are available for the viewer for the class of programs and the categories **816**. If no edit privileges are available, an exit message **817** is transmitted to the television, and RAViT is returned to a state prior to the viewer play request **802**. If edit privileges are available **816**, then editing of the viewer preferences **818** is initiated.

Editing the viewer preferences **818** is supervised to insure that viewer modifications are consistent with the permissions established for that viewer. Individual viewer permissions are established broadly for any one or more classes of programs or categories, or specifically for any category. Once editing of the preferences is found complete **819**, as required by the program category listing, play routines are initiated.

Referring now to FIG. **8C**, following the enabling of the play routines **821**, the program segment map is read **822** from the program segment map storage media or memory. As previously detailed, the program segment map defining the sequential and non-sequential segments of the selected program. At this point, RAViT's processing capabilities

retrieve and apply the viewer's preferences, stored in a memory or a storage device, to the program segment map **823**. The application of the viewer's preferences to the program segment map results in the automated logical selection of sequential and non-sequential segments of the selected video program **824** consistent with the viewer's video content preferences and the program segment map. Once the segments to be played and their sequence are determined **824**, the random access retrieval and transmission capabilities of RAViT automatically retrieve the selected sequential and non-sequential video segments stored in the video program storage device, and transmit the video segments as a seamless, continuous video program **825**.

In a interactive video game, the start and setup routines detailed with respect to FIGS. **8**A, and **8**B are integrated with each games setup routines.

As suggested previously, the capabilities of RAViT are particularly well suited to providing an editor (i.e. parent) complete control as to the video material to which a viewer/player (i.e. child) is exposed. As indicated above, RAViT provides: user, time of day, amount of viewing controls; and individual preferences for each viewer/player or class of viewers/players. Additionally, supplementing or alternative routines are provided which are preferable in those instances where: i) segments cannot be rated according to standardized descriptive structures; ii) the utilization of a descriptive structure system is not desired; or iii) a simpler routine provides the desired functionality.

Specifically, the present invention permits an editor to automatically select segments of a video program previously identified in a program segment map as providing material which may not be suitable for a viewer; viewing the selected segments and determining their suitability for viewing by the viewer; automatically generating a listing of segments responsive to the segment suitability determination applied to the program segment map; automatically retrieving the listed segments; and automatically transmitting the retrieved segments as a continuous video program for said viewer. Segments not suitable for a viewer may be defined as segments providing content and form of expression which, in a conventional sense, is deserving of a rating other than a MPAA "G" rating.

Alternatively to, or in addition to the editing system based on the application of descriptive structures, a simplified editing system is based on the "flagging" of segments irrespective of the specific nature of the material which may not be suitable for a viewer. That is all segments containing material not suitable receives the same flag or code. The flagging of segments provides an efficient method of coding and retrieving the segments and indicating their inclusion/exclusion in a program/game to be viewed/played.

An example of the editing routines that provide for the efficient previewing of flagged segments are summarized with respect to FIG. **9**. One of a number of RAViT setup routines present a listing of viewers over which the editor has editorial control. With respect to each viewer and the selected program, the listing indicates if a segment table is already available **901**, and if viewer preferences are available **902** or not **903**. Additionally the option to designate a new viewer **904** is made available to the editor.

If a corresponding table for the desired viewer is available **901** and the editor does not wish to make any changes, than selecting this option exits the routine, the operation of RAViT is then permitted as detailed previously. If a corresponding table for the selected viewer is not available, and the editor does not wish to create or update the viewer's preferences **902**, than the routine proceeds by reading the program segment map **921**. If the editor wishes to modify or create viewer preferences **903**, than the routine proceeds with the appropriate routines **912**. If the editor indicates the entry of a new viewer **904**, the appropriate viewer entry routines are enabled **909**, and the opportunity to create viewer preferences for the new viewer is provided **911**.

The routines to update/create new preferences **912** permit both a program specific or permanent updating of the selected viewer's preferences. Once viewer preferences are indicated, if any, the selected program's segment map is read **921** and compared to the preferences **922** to the extent that they are available.

If all the flagged segments are effectively excluded by the viewer preferences **922**, than the resulting program segment table is saved **941** and the routine is exited. Otherwise, in addition to an initial segment table, a list is prepared **923** consisting of any flagged segments that have a descriptive level lower than the corresponding level in the preferences, and flagged segments for which there is no corresponding preferences. In the absence of viewer preferences every flagged segment is included in the segment list.

In a manner similar to the retrieval of non-sequential segments outlined previously, only the segments in the segment list are shown one after the other **931** as a continuous stream to the editor, pausing only if an include/exclude decision is not indicated **932**. The process continuing automatically **934** until a decision on each of the flagged segments in the list is made **932**. As each decision is made the segment table is updated **933**. Alternatively, the segment table is updated and saved following the transmission of the last segment **941**.

Each segment need not be viewed in its entirety **931**, as soon as an include decision is made **932**, the showing of the next segment begins instantaneously. Additionally, it should be understood that a showing of a flagged segment is not limited to, or indicate, the actual transmission of the flagged segment's video/sound. Appreciating that certain adults may not be interested in viewing the flagged segments, a character description of the contents of the segment may be provided instead or in advance of the option to view the corresponding segment.

The above is presented to emphasize the control features and capabilities of the present invention, the particular routines shown can be enhanced in a number of ways. Configuration routines are contemplated that further facilitate and automate viewer/player controls.

For example, a configuration can be selected that automatically creates for selected or new viewers/players a segment table excluding all flagged segments. In this case at system setup a viewer is simply associated with the exclusion of all flagged segments.

Similarly, additionally, or alternatively, a viewer/player is associated with a descriptor code paralleling the MPAA rating system as previously detailed with respect to FIG. **2**D. At system setup a viewer/player is associated with an appropriate rating code, thereafter, the viewing/playing of a program is consistent with the rating code associated with the respective viewer. The simplicity of the architecture in combination with the teachings of the variable content program permits, for example, by means of a single code associated with each viewer, a parent to view an "R" version of a film, and permits a child to view a "G" version of the same film. It is noted that this architecture provides more tailored control than the simpler exclude all flagged seg-

ments architecture, but significantly less tailored control than a category specific video content preferences. In a preferred embodiment, the various structures detailed above are correlated to permit the application of a variety of content control options without requiring duplicating descriptor definition. For example a assigning a segment a descriptor other than "G" rating is equivalent to flagging the segment.

Clearly, a number of other interactive capabilities are made possible by the architecture of RAViT. For example during the viewing of a program, skip keys cause the automatic skipping of the present segment and the instantaneous viewing of the next logical segment. Other functions permit interactive modification of the segment map, such as flagging a segment, as the program is being viewed. It is intended that a number of other interactive capabilities be implemented which incorporate the teachings of prior art interactive and multi-media system. Specifically in this respect, the teachings of the patent to Bohrman, previously cited, are by reference incorporated herein.

Since the prior art is well established, and many of the features, components, and methods, found therein may be incorporated in the preferred embodiment; and since other modifications and changes varied to fit particular operating requirements and environments will be apparent to those skilled in the art, the invention is not limited to the presently preferred form of the present invention set forth here and above, it is to be understood that the invention is not limited thereby. It is also to be understood that the specific details shown are merely illustrative and that the invention may be carried out in other ways without departing from the spirit and scope of the following claims.

What is claimed is:

1. A method of retrieving video segments, comprising the steps of:

establishing video content preferences;

retrieving a video segment map directly defining a plurality of video segments of a video;

selecting video segments from said plurality of video segments responsive to an application of said video content preferences to said video segment map; and

coordinating a first retrieving means and a second retrieving means for retrieving video segments to retrieve the selected video segments and to seamlessly skip a retrieval of a non-selected video segment of said video producing a version of said video differing in length than the length of said video.

2. The method of claim 1, wherein said plurality of video segments of said video comprises at least one non-sequential video segment.

3. A video system comprising:

preferencing means for establishing video content preferences;

memory means for storing a video and a video segment map directly defining a plurality of video segments of said video;

processing means for selecting video segments from said plurality of video segments responsive to an application of said video content preferences to said video segment map;

first retrieving means and a second retrieving means for retrieving video segments;

coordinating means for coordinating said first retrieving means and said second retrieving means to retrieve the selected video segments and to seamlessly skip a retrieval of a non-selected video segment of said video producing a version of said video differing in length than the length of said video.

4. The system of claim 3, wherein said plurality of video segments of said video comprises at least one non-sequential video segment.

5. A method of retrieving video segments, comprising the steps of:

retrieving a video segment map directly defining a plurality of video segments of a video;

selecting video segments from said plurality of video segments responsive to said video segment map;

coordinating a retrieving means for retrieving video segments and a buffering means for buffering at least a portion of a video segment to retrieve the selected video segments and to seamlessly skip a retrieval of a non-selected video segment of said video producing a version of said video differing in length than the length of said video.

6. The method of claim 5, further comprising:

establishing video content preferences;

wherein said selecting is responsive to an application of said video content preferences to said video segment map.

7. The method of claim 5, wherein said plurality of video segments of said video comprises at least one non-sequential video segment.

8. A video system comprising:

memory means for storing a video and a segment map directly defining a plurality of video segments of said video;

selecting means for selecting video segments from said plurality of video segments responsive to said video segment map;

retrieving means for retrieving the selected video segments;

buffering means for buffering at least a portion of a video segment; and

coordinating means for coordinating said retrieving means and said buffering means to retrieve the selected video segments and to seamlessly skip a retrieval of a non-selected video segment of said video producing a version of said video differing in length than the length of said video.

9. The system of claim 8, further comprising:

preferencing means for establishing video content preferences;

wherein said selecting means is responsive to an application of said video content preferences to said video segment map.

10. The system of claim 9, wherein said plurality of video segments of said video comprises at least one non-sequential video segment.

11. A video system comprising:

preferencing means for establishing video content preferences;

retrieving means for retrieving a video segment map directly defining a plurality of video segments of a video and for retrieving video segments of said video;

buffering means for buffering at least a portion of said video;

processing means for selecting video segments from said plurality of video segments responsive to an application of said video content preferences to said video segment map;

coordinating means for coordinating said retrieving means and said buffering means to retrieve the selected video segments and to seamlessly skip a retrieval of a non-selected video segment of said video producing a version of said video differing in length than the length of said video.

12. The system of claim **11**, wherein said plurality of video segments of said video comprises at least one non-sequential video segment.

* * * * *

EXHIBIT E

BILATERAL CONFIDENTIALITY AGREEMENT

This "Agreement" is a bilateral confidentiality agreement by and between Nissim Corp., a Florida corporation, Mr. Max Abecassis, an individual, both with a place of business at 3207 Clint Moore Road #205, Boca Raton, FL 33496, and Matthew Jarman and Lee Jarman, individuals, both with a place of business at 3830 South 3100 East, Salt Lake City, UT 84109. The party disclosing proprietary and confidential information will be referred to as the "Disclosing Party" and the party receiving the proprietary and confidential information will be referred to as the "Receiving Party".

WHEREAS, the parties anticipate that it may be necessary for the Disclosing Party to disclose to the Receiving Party information of a proprietary and confidential nature, including, but not limited to information relating to the Disclosing Party's intellectual properties and trade secrets including inventions, patents and patent applications, copyrights, hardware and system configurations and supporting documentation, business and marketing plans, an identification of potential strategic partners and/or investors, and other business and technical information of a proprietary and confidential nature ("Confidential Information").

NOW THEREFORE, in consideration of the mutual covenants and promises contained herein, it is agreed as follows:

1. The Confidential Information will be used by the Receiving Party solely for an evaluation of a potential business relationship between the parties unless previously agreed to in writing by the Disclosing Party.

2. The Receiving Party agrees that it will not disclose any Confidential Information to any other party (other than its principal employees who are directly involved in evaluating said business relationship and who are contractually bound to protect the confidentiality of such Confidential Information), and that it will use its best efforts to prevent any such disclosure of Confidential Information. The Receiving Party shall not reverse-assemble, reverse-compile, or otherwise reverse-engineer any Confidential Information supplied hereunder.

3. The limitations on disclosure or use of Confidential Information shall not apply to, and the Receiving Party shall not be liable for disclosure or use of Confidential Information with respect to which the Receiving Party proves using tangible evidence that any of the following conditions exist: (a) If, prior to the receipt thereof from the Disclosing Party, it has been developed independently by the Receiving Party, or was lawfully known to the Receiving Party. (b) If, subsequent to the receipt thereof (i) it is published by the Disclosing Party or is publicly disclosed by the Disclosing Party to others, without restriction, or (ii) it has been lawfully obtained by the Receiving Party from other sources, provided such other source did not receive it due to a breach of this Agreement, or (iii) it otherwise comes within the public knowledge or becomes generally known to the public.

4. All Confidential Information shall be and remain the property of the Disclosing Party, and all embodiments and copies thereof, upon the written request of the Disclosing Party and at the Disclosing Party's option, shall be promptly returned to the Disclosing Party or destroyed (in which case the Receiving Party shall certify to the Disclosing Party as to its destruction).

5. Neither the execution and delivery of this Agreement, nor the furnishing of any Confidential Information by the Disclosing Party shall be construed as granting to the Receiving Party either expressly, by implication, estoppel or otherwise, any license under any invention, patent, trademark, or copyright now or hereafter owned or controlled by the Disclosing Party.

6. The Receiving Party acknowledges and agrees that the restrictions contained in this Agreement are necessary for the protection of the business and property of the Disclosing Party, and considers them to be reasonable for such purpose. The Receiving Party agrees that any breach of this Agreement may cause the Disclosing Party substantial and irreparable damage and therefore, in the event of any such breach, the Receiving Party agrees that the Disclosing Party

shall be entitled to such remedies as may be afforded by applicable law, without being required to post a bond.

7. This Agreement constitutes the entire Agreement between the parties, superseding all previous communications and understandings, either written or oral, between the parties relative to the subject matter hereof, and shall cease entirely four (4) years after the date hereof. This Agreement may only be amended by express written agreement signed by authorized representatives of both parties referring specifically to this Agreement. If any provision of this Agreement is held to be illegal, invalid or unenforceable, the legality or enforceability of the remaining provisions will not be affected or impaired. This Agreement shall be construed and interpreted in accordance with the internal laws of the State of Florida. Any notices pursuant to this Agreement must be sent to the parties at their addresses set forth above, by either certified mail return receipt requested, Federal Express, Express Mail, or hand delivery.

IN WITNESS WHEREOF, the parties hereto have caused this Agreement to be executed by their duly authorized representatives, effective as of the date of the last signature hereto.

Nissim Corp./Mr. Max Abecassis

By:
Mr. Max Abecassis
President, and as Individual

Date: 3-13-00

By:
Matt Jarman, Lee Jarman
Individuals

Date: 3/13/00

JS 44
(Rev. 12/96)

CIVIL COVER SHEET

The JS-44 civil cover sheet and the information contained herein neither replace nor supplement the filing and service of pleadings or other papers as required by law, except as provided by local rules of court. This form, approved by the Judicial Conference of the United States in September 1974, is required for the use of the Clerk of Court for the purpose of initiating the civil docket sheet. (SEE INSTRUCTIONS ON THE REVERSE OF THE FORM.)

04-21140

I. (a) PLAINTIFFS

NISSIM CORP.

DEFENDANTS

CLEAR CIV, HUCK, MATTHEW JARMAN & LEE JARMAN

(b) COUNTY OF RESIDENCE OF FIRST LISTED PLAINTIFF _____ (EXCEPT IN U.S. PLAINTIFF CASES)

DADE 04C/21140/PLH/TURNOFF

COUNTY OF RESIDENCE OF FIRST LISTED DEFENDANT Utah (IN U.S. PLAINTIFF CASES ONLY)

NOTE: IN LAND CONDEMNATION CASES, USE THE LOCATION OF THE TRACT OF LAND INVOLVED.

MAGISTRATE JUDGE

(c) ATTORNEYS (FIRM NAME, ADDRESS, AND TELEPHONE NUMBER)

John C. Carey
200 So. Biscayne Blvd, Suite 3460
Miami FL 33131 305-789-9358

ATTORNEYS (IF KNOWN)

(d) CIRCLE COUNTY WHERE ACTION AROSE: DADE, MONROE, BROWARD, PALM BEACH, MARTIN, ST. LUCIE, INDIAN RIVER, OKEECHOBEE, HIGHLANDS

II. BASIS OF JURISDICTION (PLACE AN "X" IN ONE BOX ONLY)

- ☐ 1 U.S. Government Plaintiff
- ☒ 3 Federal Question (U.S. Government Not a Party)
- ☐ 2 U.S. Government Defendant
- ☐ 4 Diversity (Indicate Citizenship of Parties in Item III)

III. CITIZENSHIP OF PRINCIPAL PARTIES (PLACE AN "X" IN ONE BOX FOR PLAINTIFF AND ONE BOX FOR DEFENDANT)
(For Diversity Cases Only)

	PTF	DEF		PTF	DEF
Citizen of This State	☐ 1	☐ 1	Incorporated or Principal Place of Business In This State	☐ 4	☐ 4
Citizen of Another State	☐ 2	☐ 2	Incorporated and Principal Place of Business In Another State	☐ 5	☐ 5
Citizen or Subject of a Foreign Country	☐ 3	☐ 3	Foreign Nation	☐ 6	☐ 6

IV. ORIGIN (PLACE AN "X" IN ONE BOX ONLY)

☒ 1 Original Proceeding | ☐ 2 Removed from State Court | ☐ 3 Remanded from Appellate Court | ☐ 4 Reinstated or Reopened | ☐ 5 Transferred from another district (specify) | ☐ 6 Multidistrict Litigation | ☐ 7 Appeal to District Judge from Magistrate Judgment

V. NATURE OF SUIT (PLACE AN "X" IN ONE BOX ONLY)

A CONTRACT
- ☐ 110 Insurance
- ☐ 120 Marine
- ☐ 130 Miller Act
- ☐ 140 Negotiable Instrument
- ☐ 150 Recovery of Overpayment & Enforcement of Judgment
- ☐ 151 Medicare Act
- B☐ 152 Recovery of Defaulted Student Loans (Excl Veterans)
- B☐ 153 Recovery of Overpayment of Veteran's Benefits
- ☐ 160 Stockholders Suits
- ☐ 190 Other Contract
- ☐ 195 Contract Product Liability

A REAL PROPERTY
- ☐ 210 Land Condemnation
- B☐ 220 Foreclosure
- ☐ 230 Rent Lease & Ejectment
- ☐ 240 Torts to Land
- ☐ 245 Tort Product Liability
- ☐ 290 All Other Real Property

A TORTS

PERSONAL INJURY
- ☐ 310 Airplane
- ☐ 315 Airplane Product Liability
- ☐ 320 Assault, Libel & Slander
- ☐ 330 Federal Employers Liability
- ☐ 340 Marine
- ☐ 345 Marine Product Liability
- ☐ 350 Motor Vehicle
- ☐ 355 Motor Vehicle Product Liability
- ☐ 360 Other Personal Injury

PERSONAL INJURY
- ☐ 362 Personal Injury – Med Malpractice
- ☐ 365 Personal Injury – Product Liability
- ☐ 368 Asbestos Personal Injury Product Liability

PERSONAL PROPERTY
- ☐ 370 Other Fraud
- ☐ 371 Truth in Lending
- ☐ 380 Other Personal Property Damage
- ☐ 385 Property Damage Product Liability

A CIVIL RIGHTS
- ☐ 441 Voting
- ☐ 442 Employment
- ☐ 443 Housing/ Accommodations
- ☐ 444 Welfare
- ☐ 440 Other Civil Rights

PRISONER PETITIONS
- B☐ 510 Motions to Vacate Sentence

HABEAS CORPUS:
- B☐ 530 General
- A☐ 535 Death Penalty
- B☐ 540 Mandamus & Other
- B☐ 550 Civil Rights
- B☐ 555 Prison Condition

FORFEITURE/PENALTY
- B☐ 610 Agriculture
- B☐ 620 Other Food & Drug
- B☐ 625 Drug Related Seizure of Property 21 USC 881
- B☐ 630 Liquor Laws
- B☐ 640 R.R. & Truck
- B☐ 650 Airline Regs.
- B☐ 660 Occupational Safety/Health
- B☐ 690 Other

A LABOR
- ☐ 710 Fair Labor Standards Act
- ☐ 720 Labor/Mgmt Relations
- ☐ 730 Labor/Mgmt Reporting & Disclosure Act
- ☐ 740 Railway Labor Act
- ☐ 790 Other Labor Litigation
- A☐ 791 Empl Ret Inc. Security Act

A BANKRUPTCY
- ☐ 422 Appeal 28 USC 158
- ☐ 423 Withdrawal 28 USC 157

A PROPERTY RIGHTS
- ☐ 820 Copyrights
- ☒ 830 Patent
- ☐ 840 Trademark

B SOCIAL SECURITY
- ☐ 861 HIA (1395ff)
- ☐ 862 Black Lung (923)
- ☐ 863 DIWC/DIWW (405(g))
- ☐ 864 SSID Title XVI
- ☐ 865 RSI (405(g))

FEDERAL TAX SUITS
- A☐ 870 Taxes (U.S. Plaintiff or Defendant)
- A☐ 871 IRS – Third Party 26 USC 7609

A OTHER STATUTES
- ☐ 400 State Reapportionment
- ☐ 410 Antitrust
- ☐ 430 Banks and Banking
- B☐ 450 Commerce/ICC Rates/etc.
- ☐ 460 Deportation
- ☐ 470 Racketeer Influenced and Corrupt Organizations
- ☐ 810 Selective Service
- ☐ 850 Securities/Commodities/ Exchange
- ☐ 875 Customer Challenge 12 USC 3410
- ☐ 891 Agricultural Acts
- ☐ 892 Economic Stabilization Act
- ☐ 893 Environmental Matters
- ☐ 894 Energy Allocation Act
- ☐ 895 Freedom of Information Act
- ☐ 900 Appeal of Fee Determination Under Equal Access to Justice
- ☐ 950 Constitutionality of State Statutes
- ☐ 890 Other Statutory Actions A OR B

VI. CAUSE OF ACTION (CITE THE U.S. CIVIL STATUTE UNDER WHICH YOU ARE FILING AND WRITE BRIEF STATEMENT OF CAUSE. DO NOT CITE JURISDICTIONAL STATUTES UNLESS DIVERSITY.)

35 USC 271

LENGTH OF TRIAL via ___ days estimated (for both sides to try entire case)

VII. REQUESTED IN COMPLAINT: ☐ CHECK IF THIS IS A CLASS ACTION UNDER F.R.C.P. 23

DEMAND $

CHECK YES only if demanded in complaint:
JURY DEMAND: ☒ YES ☐ NO

VIII. RELATED CASE(S) IF ANY (See instructions): JUDGE _____ DOCKET NUMBER _____

DATE 5/13/04

SIGNATURE OF ATTORNEY OF RECORD John Carey

FOR OFFICE USE ONLY

RECEIPT # _____ AMOUNT _____ APPLYING IFP _____ JUDGE _____ MAG. JUDGE _____

$150.00 901311
05/13/04