aycan
PACS for People

Products Services About Us News



Years of PACS Innovation

Continued dedication to improving patient care, while increasing productivity and driving down costs.

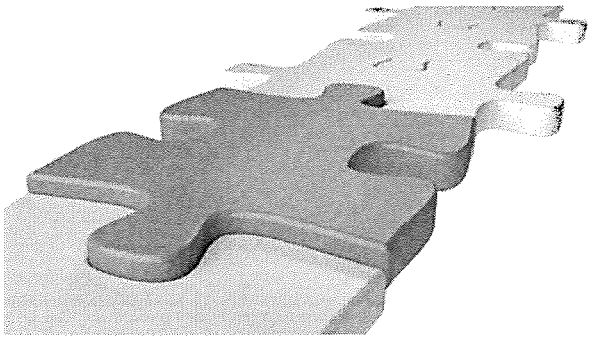

PACS integration into your IT infrastructure.

[read more]

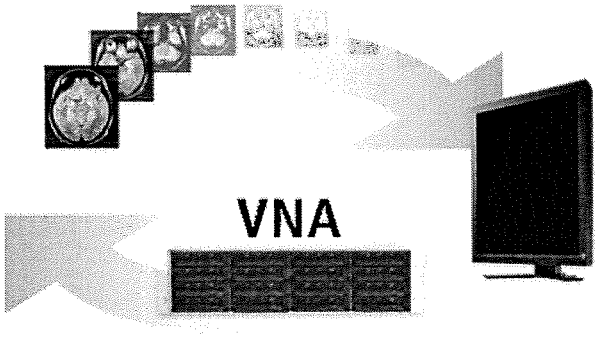

PACS change made easy: aycan liberates you from vendor dependency by offering a vendor neutral and fast PACS

[read more]

Products
- aycan store (PACS)
- aycan workflow
- aycan xray-print
- aycan workstation
- aycan mobile
- aycan web

Partner Products

Applications
Follow-ups
Dental Medicine
Mammography
Nuclear Medicine
Oncology
Teleradiology
Vascular Surgery
Dictation Speech
Dynamic MRI
Private Cloud
Others

Services
Remote Support
Personal Service
Switch PACS
Integration
Migration

About Us
About aycan
Contact Us
Quality Assurance
Testimonials
Careers
International Dealers
Partners
Imprint

Contact
aycan Medical Systems, LLC
693 East Avenue
Rochester, NY 14607, USA
Phone: 585-473-1350
Fax: 585-473-1596
info@aycan.com
www.aycan.com

Community
- Newsletter
- Blogspot
- Twitter
- Facebook
- Youtube
- Pinterest
- Triplt

© aycan Medical Systems, LLC
German Engineering

EXHIBIT B

aycan
PACS for People

Products Services About Us News



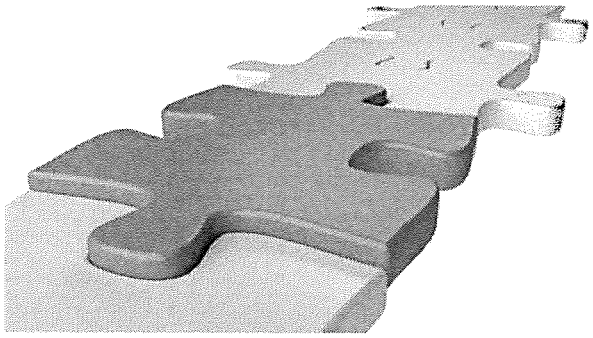

PACS integration into your IT infrastructure.
[read more]

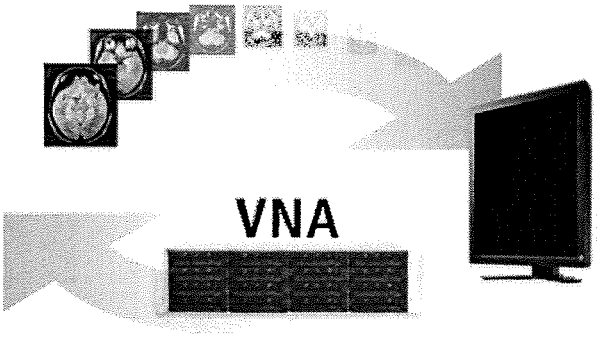

PACS change made easy: aycan liberates you from vendor dependency by offering a vendor neutral and fast PACS
[read more]

Products
- aycan store (PACS)
- aycan workflow
- aycan xray-print
- aycan workstation
- aycan mobile
- aycan web

Partner Products

Applications
Follow-ups
Dental Medicine
Mammography
Nuclear Medicine
Oncology
Teleradiology
Vascular Surgery
Dictation Speech
Dynamic MRI
Private Cloud
Others

Services
Remote Support
Personal Service
Switch PACS
Integration
Migration

About Us
About aycan
Contact Us
Quality Assurance
Testimonials
Careers
International Dealers
Partners
Imprint

Contact
aycan Medical Systems, LLC
693 East Avenue
Rochester, NY 14607, USA
Phone: 585-473-1350
Fax: 585-473-1596
info@aycan.com
www.aycan.com

Community
- Newsletter
- Blogspot
- Twitter
- Facebook
- Youtube
- Pinterest
- TripIt

to top close site map Imprint 585-473-1350

© aycan Medical Systems, LLC

German Engineering

aycan
PACS for People

Products Services About Us News

Our PACS Solutions

With a focus on vendor neutral integration and service, aycan is a worldwide provider of solutions for viewing, printing, sharing, and storing medical images and information that improve workflow efficiency and drive down costs.

From large hospitals to small imaging centers, our products can help improve any environment.


W.C. Röntgen

German Engineering

aycan's main research and development facility is based in Würzburg, Germany, the same city where Röntgen discovered the 'x-ray' in 1895.

aycan store

The VNA DICOM PACS Archive



A powerful, low cost, vendor neutral DICOM archive/distribution system.

[read more]

aycan workflow

Integrated RIS/PACS



aycan workflow is a fully integrated RIS/PACS solution that provides a turnkey end-to-end digital imaging and patient management system.

[read more]

aycan xray-print

#1 DICOM paper print solution



DICOM paper-print solution for sharing radiological images with referring physicians and patients.

[read more]

aycan workstation

Multi-modality post-processing workstation



A Mac-based multi-modality workstation for post-processing and primary diagnosis.

[read more]

aycan mobile

Teleradiology iPad App



The FDA 510(k) cleared **aycan mobile** iPad app makes teleradiology easy, fast, and secure.

[read more]

aycan web

A DICOM viewer for image distribution



Distribute DICOM images and their associated information from **aycan store**.

With **aycan web** you can edit images without installing a particular client using a HTML5 compatible web browser.

[read more]

© aycan Medical Systems, LLC

German Engineering

aycan Mammography workstation

Advanced hanging protocols, optimized for mammography workflow, ensure a fast and consistent reading of studies. Key tools for mammography include:

- 5-MP Monitor Support
- 11-bit Monitor Support Plug-in
- Advanced Hanging Protocols
- Manual LUT Setup (e.g. Sigmoid)
- Support for Breast Tomosynthesis objects

aycan mammography workstation supports Tomosynthesis Objects

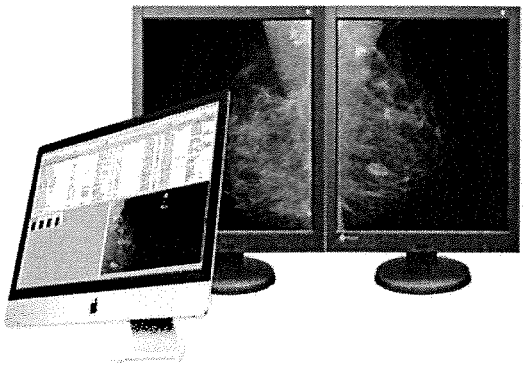

Advanced Hanging Protocols

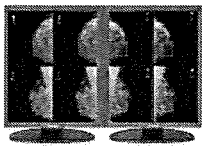

Get more information about advanced Hanging Protocols

[read more]

5MP Monitors



High-Resolution
Multi-Grayscale
High-Definition and High-Density

[read more]

8MP Monitors

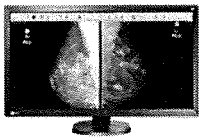

31.1" Color
FDA cleared for
Mammography and tomosynthesis

[read more]

Film Digitizer and Printer

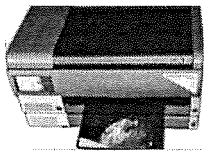

Film Digitizer
Film Printer

[read more]

Full-Field Digital Mammography

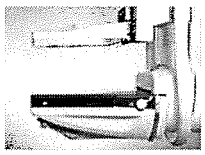

Get more Information about FFDM

[read more]

© aycan Medical Systems, LLC

aycan
PACS for People

Products Services About Us News

aycan workstation

Multi-modality post-processing workstation

With tools for general diagnostic reading and advanced post-processing, plus certified plug-ins, **aycan workstation** is the perfect solution wherever there is demand for fast and easy access to medical images.

[read more]

CE 0297 FDA (USA) cleared as a medical device class II

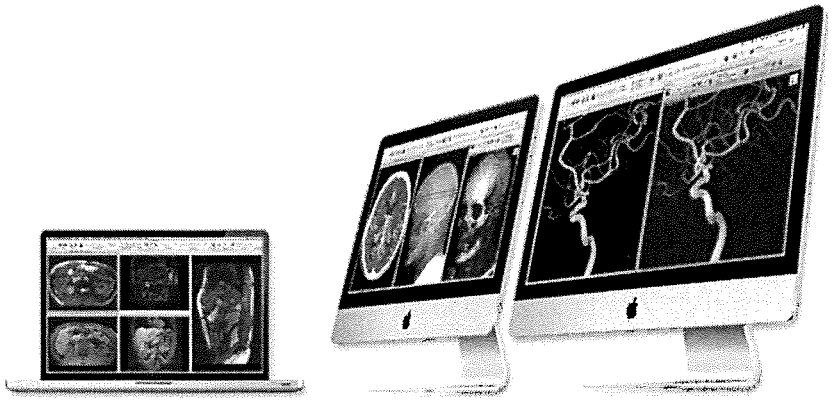

Benefits

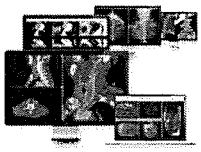

General diagnostic tools
Advanced post-processing
Certified plug-ins

[read more]

Applications

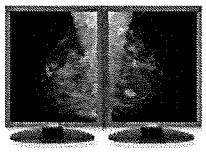

Dental Medicine
Mammography
Nuclear Medicine
Oncology

[read more]

New Features Version 3.0



Series Navigator
Viewer Macros
Segmentation
Digital Dictation

[read more]

Structured Reporting



Create individual Reports (optional)
Easy distribution
BI-RADS, PI-RADS, NASCET, AAA, ...

[read more]

Deconstructed PACS

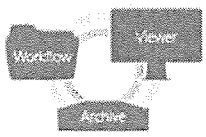

Less compromise
Best of Breed
Vendor Independence

[read more]

Mac & Windows



Integration
User and system administration
Security aspects

[read more]

Plug-Ins



Plug-Ins for Recist, Ejection Fraction, Hanging Protocols, Vessel Analysis, FusionSync, ...

[read more]

Free Demo



Curious?
Try free for 30 days.

[read more]

FAQ



Supported OS X Versions
Supported Displays
Minimal System Requirements

[read more]

© aycan Medical Systems, LLC

German Engineering

aycan
PACS for People

Products Services About Us News

International Dealers

Contact us directly or through one of our qualified dealers around the globe. We sell our solutions worldwide directly. Move your mouse over a blue labelled country to get information about a local partner in that area. If your country is not listed, please contact aycan International.



Home › About Us › International Dealers

to top open site map Imprint

585-473-1350

© aycan Medical Systems, LLC

German Engineering