UNITED STATES DISTRICT COURT
MIDDLE DISTRICT OF FLORIDA
TAMPA DIVISION

THE IPE CLIP FASTENER COMPANY, LLC,

Plaintiff,

v.

SIMPSON STRONG-TIE COMPANY, INC.,

Defendant.

AND COUNTER-CLAIMS

Case No.: 8:16-cv-02862-SDM-TGW

DEFENDANT AND COUNTER-CLAIMANT SIMPSON STRONG-TIE COMPANY INC.'S RESPONSE IN OPPOSITION TO PLAINTIFF'S MOTION TO STAY PENDING REEXAMINATION

Defendant and Counter-Claimant Simpson Strong-Tie Company Inc. ("Simpson"), by and through its undersigned counsel, hereby files this Response in Opposition to Plaintiff and Counter-Defendant The Ipe Clip Fastener Company, LLC's ("Plaintiff") Motion to Stay Pending Reexamination (the "Motion").

I. INTRODUCTION

The Court should deny Plaintiff's motion to stay this proceeding for an indeterminate period of time (which will likely be at least three (3) to four (4) years at best) as this matter is already set for resolution by this time next year. Plaintiff's requests for *ex parte* reexamination of the two patents at issue – submitted in staggered fashion four and five months after Plaintiff filed this declaratory relief action in October 2016 – are simply part of Plaintiff's plan to delay resolution of its own lawsuit.

The proposed multi-year stay for an undetermined period of time is inappropriate here because: (1) a stay unduly prejudices Simpson by, among other things, risking loss of evidence, especially as Plaintiff has heretofore stonewalled Simpson's attempts to obtain relevant discovery; (2) a stay is unlikely to simplify the issues because an *ex parte* reexamination neither addresses all invalidity arguments available to Plaintiff, nor estops Plaintiff from asserting any invalidity arguments considered in the reexamination; and (3) a stay will not reduce the burden of litigation on either the parties or the Court because the Court, not the U.S Patent and Trademark Office ("PTO"), must decide the matters in dispute. Indeed, due to Plaintiff's unexplained staggering of its two requests for reexamination, a stay is likely to profoundly complicate what has otherwise been a relatively efficient advancement of this case toward trial next year. The balance of the

merits tips strongly in favor of resolving this case by next July, not some unknown number of years from now.

II. STATUS OF THE CASE

Plaintiff filed this declaratory relief action on October 7, 2016, ostensibly seeking a declaration that it has not breached a patent license agreement with Simpson by failing to pay royalties related to two deck fastener products (the "Accused Products") that Simpson contends practice two of its patents, U.S. Patent Nos. 7,874,113 (the "'113 Patent") and 8,161,702 (the "'702 Patent") (collectively, the "Patents-at-Issue") that are licensed in the agreement. Simpson has counter-sued for breach of contract, and alternatively, for patent infringement. Plaintiff still has not answered Simpson's counterclaim, opting instead (ironically) to seek dismissal of Simpson's patent infringement claim. Nevertheless, Plaintiff agreed with Simpson on a case management schedule, which currently includes closing fact discovery by October 20, 2017. The Court entered a case management order on June 13, 2017 that adopted many of the deadlines on which the parties had agreed, and more importantly, set trial for July 2018.

Simpson has propounded discovery, seeking basic documents and responses to interrogatories. But Plaintiff has largely avoided providing any meaningful responses. Simpson has moved to compel answers to basic requests, such as the identities of those involved in the development of the Accused Products, documents related to the development and design of the Accused Products, and documents related to damages. *See* Dkt. 26. To avoid providing damages-related information in particular, Plaintiff has

filed a pending motion to bifurcate liability and damages discovery despite the relatively short timeline for fact discovery in the Court's scheduling order. *See* Dkt. 40 and 44.

In the meantime, Plaintiff filed requests with the PTO for *ex parte* reexamination of the Patents-at-Issue earlier this year, but staggered the requests. Plaintiff waited until February 2, 2017, four months after filing this lawsuit, to submit its first request for reexamination, related to the '113 Patent. Plaintiff then waited until March 28, 2017, nearly a month and a half later, to submit its second reexamination request, concerning the '702 Patent. Plaintiff does not explain why it waited until four months after filing this lawsuit to seek reexamination, or why it staggered the requests such that the PTO's review will take place on different tracks. Plaintiff filed the present motion on July 6, 2017, roughly ten months from its filing of this case, resting its basis for the stay on the off-chance that the PTO will cancel all the claims of the Patents-at-Issue. *See* Motion at 7.[1]

Against Plaintiff's belatedly-filed motion to stay, the Court's scheduling order has already put this case on track for an efficient and timely resolution pursuant to Rule 1, Fed. R. Civ. Pro. ("to secure the just, speedy, and inexpensive determination of every action and proceeding"). Discovery is to be completed in 3 months; trial is set to commence in approximately 12 months. Discovery continues, and Simpson believes the

[1] Reexamination of the Patents-at-Issue is not a foregone conclusion. Pursuant to 37 C.F.R. 1.530 Simpson has filed a "Patent Owner's Statement" with regard to the reexamination grant related to the '113 Patent, explaining why reexamination is unnecessary because no new substantial questions of patentability are actually present. *See* Declaration of Erick C. Howard In Support of Opposition to Motion to Stay Proceedings ("Howard Decl.") Ex. A at 13-25. If the PTO accepts the arguments in Simpson's Statement, no reexamination will go forward as to that patent. Simpson is reviewing the PTO's reexamination grant concerning the '702 Patent and has until August 22, 2017 to submit a Patent Owner's Statement.

case can be prepared and ready to go to trial next July, assuming Plaintiff is not successful at further delay and obfuscation related to discovery.

The Patents-at-Issue are not complex or overly sophisticated. The inventions disclosed in the patents involve physical structures, namely, deck fasteners that are used to connect deck boards and support joists in connection with deck construction. Both Patents-at-Issue describe the fastener invention as:

> an anchoring biscuit device that has the ability for pre-setting distances between adjacent boards and attaching to at least one board by means in addition to the biscuit itself. The anchoring biscuit device physically joins two adjacent boards in the same plane to a third, supporting board. The anchoring half-biscuit device joins two adjacent boards at right angles to one another. Further, the present invention anchoring biscuit includes compressive elements to accommodate swelling and expansion of boards after installation.

See Amended Answer and Counter-Claim [Dkt 23], Exs. C and D at Col. 1:18-28. Both also show exemplars of the invention, such as the following:

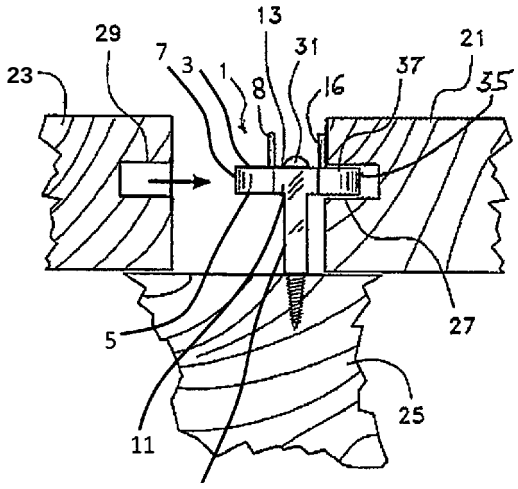

[17]

See id. at Abstract.

Although resolving the parties' breach of contract and infringement disputes requires determining whether the Patents-at-Issue read on the Accused Products, it does

not require contending with particularly complex issues of claim construction, nor will it require lengthy explanations of the technology involved to frame the dispute. The matters are straightforward, trial is scheduled, and the case can be resolved in accordance with the policy of this Court for speedy and inexpensive resolution of the dispute. This case becomes lengthy, complicated, and expensive only if the stay is granted.

III. ARGUMENT

There is no dispute that this Court "has broad discretion to grant or deny a stay pending reexamination of [a patent] and 'is under no obligation to delay its own proceedings by yielding to ongoing patent reexaminations, regardless of their relevancy to infringement claims which the court must analyze.'" *eCOMSYSTEMS, Inc. v. Shared Marketing Servs.*, 2011 U.S. Dist. LEXIS 10174, at *4 (M.D. Fla. Jan. 26, 2011). There is also no per se rule that patent cases must be stayed pending reexamination because such a rule would "derail" litigation. *Id.*; *see also Soverain Software LLC v. Amazon.com, Inc.*, 356 F. Supp. 2d 660, 662 (E.D. Tex. 2005). In determining whether to grant a stay, courts generally examine three factors: (1) whether a stay will simplify the issues and streamline the trial; (2) whether a stay will unduly prejudice or tactically disadvantage the non-moving party; and (3) whether a stay will reduce the burden of litigation on the parties and on the court. *eCOMSYSTEMS, Inc.*, 2011 U.S. Dist. LEXIS 10174, at *5 (*citing Freedom Scientific, Inc. v. GW Micro, Inc.*, 2009 U.S. Dist. LEXIS 70701 (M.D. Fla. July 29, 2009). Here, all three factors weigh against a stay.

A. **A Stay Will Not Streamline The Issues**

Plaintiff contends that a stay will simplify the issues because, in effect, Plaintiff speculates that the PTO will invalidate all the asserted claims. Indeed, Plaintiff mischaracterizes the current status of the Patents-at-Issue before the PTO in arguing its Motion. Plaintiff contends that "[t]he PTO has rejected all the claims of the Simpson Patents." Motion at 3. But that is absolutely false. Although the PTO found a "substantial new question of patentability," the bar to meet that standard is relatively low, requiring only that "there is a substantial likelihood that a reasonable examiner would consider the prior art patent or printed publication important in deciding whether or not the claim is patentable." *Manual of Patent Examination and Procedure (MPEP)* § 2242 (9th ed. Rev. 7 2015). That is a far cry from having "rejected" all of the claims. Indeed, "'a substantial new question of patentability' as to a patent claim could be present even if the examiner would not necessarily reject the claim as either fully anticipated by, or obvious in view of, the prior art." *Id.; see also*, *In re Etter*, 756 F.2d 852, 857 n.5 (Fed. Cir. 1985) (inquiry occasioned by request for reexamination not directed to resolution of validity but simply whether reexamination order should issue).

There is, in fact, every probability that the PTO will confirm the asserted claims, in which case, waiting several years for the reexaminations to conclude will have gained neither the parties nor the Court any simplification at all. *See Ariba, Inc. v. Emptoris, Inc.*, 2007 U.S. Dist. LEXIS 78857, at *5 (E.D. Tex. Oct. 23, 2007) ("Statistically, 90% of all reexaminations result in the confirmation of at least some of the claims in a patent. Therefore, even after reexamination, if only one claim remained, invalidity would

continue to be an issue, and so a stay would not preserve many resources."). Simpson has asserted multiple patent claims of each of the Patents-at-Issue, and needs to show that only one reads on the Accused Products to prevail. Confirmation of any of the asserted claims means that the case must move forward on the merits.

Unlike *inter partes* review (IPR) proceedings, which Plaintiff chose not to pursue, *ex parte* reexamination has no collateral estoppel effect on Plaintiff's ability to assert invalidity arguments against the Patents-at-Issue, even if the same arguments were considered in the reexamination. *See eCOMSYSTEMS, Inc.*, 2011 U.S. Dist. LEXIS 10174, at *2; 35 U.S.C. § 315(e) (estoppel effect of *inter partes review*); *see also Nidec Corp. v. LG Innotek Co., Ltd.*, 2009 U.S. Dist. LEXIS 46123, at *16 (E.D. Tex. Apr. 3, 2009) ("simplification of issues in this litigation will not necessarily result from reexamination"). Furthermore, reexamination does not examine all issues that could invalidate a patent. Namely, reexamination only considers the validity of the patent with regard to prior art. 35 U.S.C. §§ 302, 311. In effect, *ex parte* reexamination costs Plaintiff nothing in terms of its defenses. The Court is thus unlikely to save any time and the parties will save no resources under these circumstances. Indeed, Simpson will have to expend more resources to fight the same battles twice, while Plaintiff spends nothing because it cannot actively participate in the *ex parte* reexamination proceeding. A multi-year delay in this straightforward case does not make sense when reexamination cannot resolve all the issues in the litigation.

The proposed stay's failure to narrow or simplify the issues occurs against the backdrop of the time it will take for the staggered reexaminations to conclude. Unlike an

IPR, an *ex parte* reexamination has no defined limits on its duration. IPRs must be completed within 18 months of their initial inception. But *ex parte* reexaminations, may and often do, linger for years. On average, the reexamination process averages 25.8 months and the appellate process to the Patent Trial and Appeal Board ("PTAB") averages 7.5 months. *See* Howard Decl., Exs. B and C. An appeal of the PTAB's decision could add another 18 to 24 months. Here, there are two patents at issue, and because their reexamination process (should they move forward) will be staggered, the best estimate of the delay attending a stay is anywhere between 3.5 to 4.5 years. In all likelihood, after all that time has passed, the parties will still have to litigate whether the Accused Products practice the claims of the Patents-at-Issue, with none of the issues being appreciably narrowed. By contrast, if the case continues, trial will be had on all issues in a manner binding on the parties by this time next year.[2] *See Advanced Cartridge Techs., LLC v. Lexmark Int'l*, 2010 U.S. Dist. LEXIS 83475 (M.D. Fla Aug. 16, 2010) (denying motion to stay pending reexamination where patented technology not complicated and trial date already set).

B. **A Stay Will Unduly Prejudice Simpson**

Contrary to Plaintiff's contention, Simpson will be fundamentally and unduly prejudiced by a four or more year delay in the adjudication of this matter. Plaintiff makes the disingenuous argument that a stay will not prejudice Simpson because discovery is still in its early stages. But discovery is not further along because Plaintiff has refused to

[2] As Plaintiff admits, the arguments made in its reexamination requests are closely akin to the invalidity arguments it asserts in the lawsuit. It is imminently more efficient for Plaintiff's defenses to be heard and decided next July as opposed to some undetermined point after 2021.

provide even basic information, even while it admits it is withholding responsive, non-privileged documents. *See* Howard Decl., Ex. D at 6-7. Plaintiff's refusal to provide even basic documents and information has hampered Simpson's ability to efficiently conduct depositions. Plaintiff cannot use the fact that it has obstructed discovery as a basis to argue that a stay will cause no prejudice to Simpson because discovery is purportedly still in the "early stages." *See* L.R. 1.01(b) (matters before court to be adjudicated so as to "avoid technical and unjustified delay, and to secure just, expeditious and inexpensive determination of all proceedings."); *Alltech, Inc. v. Cenzone Tech., Inc.*, 2007 U.S. Dist. LEXIS 19989, *9 (S.D. Cal. March 21, 2007) (lapse of time may cause undue prejudice due to risk of loss of evidence).

Indeed, Plaintiff's refusal to provide discovery shows that a multi-year delay will make it less likely that Simpson can obtain the relevant evidence it needs to pursue its case. Among other things, Plaintiff has refused to provide the names of witnesses who may have relevant knowledge. *See* Howard Decl., Ex. D at 6. Witnesses and documents that Simpson may be able to track down with relative ease now, may be much harder to locate four or more years from now. And certainly the memories of witnesses are sure to fade over that time. Witnesses who currently may be under a preservation duty because they work for Plaintiff will not have that duty if they leave Plaintiff's employment during the stay and take documents or other information with them. Plaintiff's documents, and witnesses with knowledge, are currently in a black box due to Plaintiff's stonewalling. A stay lasting four or more years will likely cast them into a black hole from which

Simpson will never obtain their information. Plaintiff, on the other hand, suffers no prejudice at all by having the case it brought tried next year.

C. **A Stay Will Not Reduce The Burden Of Litigation On The Parties Or The Court**

A stay does nothing to reduce the burden of litigation on the parties or the Court because ultimately the Court and a jury will have to decide the issues of validity, infringement, and breach of license regardless of a stay. Plaintiff wrongly claims that the outcome of the reexaminations could determine the outcome of the parties' claims. But the PTO does not have the last word – a court does. Plaintiff selectively and partially quotes from the License Agreement to argue that a "Valid Claim" is defined as "'a claim in an unexpired BHE [Simpson] Patent, which has not been held …. unpatentable through any … reexamination … proceeding in the United States Patent and Trademark Office …. '" *See* Motion at 7. But the License Agreement makes clear in the language that Plaintiff relegates to ellipses, that a court determines what constitutes a "Valid Claim":

> 'Valid Claim' shall mean a claim in an unexpired BHE Patent, which has not been disclaimed, held invalid by a court of competent jurisdiction from which no appeal has been or can be taken or held unpatentable through any reissue, reexamination and/or interference proceeding in the United States Patent and Trademark Office and any other similar process or opposition proceeding in any foreign Patent Office which is affirmed or sustained by any panel or court of competent jurisdiction from which no appeal has been or can be taken. [emphasis added].

See ¶1.01(b) of Exh. F. to Friedman Declaration.[3]

[3] If Plaintiff believed a reexamination proceeding alone determined the matters in dispute, it could have simply requested reexamination without filing this lawsuit at all. That Plaintiff chose to institute this proceeding and then, only months later, seek staggered reexamination demonstrates that it seeks to use reexamination as simply a

Assuming the PTO confirms some or all of the claims, the Court will still have to address invalidity because, as discussed above, Plaintiff is sure to assert invalidity arguments made before the PTO as well as those that were not. No burden reduction occurs there. And no burden reduction occurs on the issues of infringement or breach of license because those are matters exclusively for court adjudication. Moreover there is a lurking administrative burden for the Court if the patents emerge from reexamination confirmed, but at different times. Simpson will want to immediately restart the case as to the first patent to complete reexamination. Plaintiff obviously will not, and the parties' disagreement is likely to lead to more motion practice posing difficult questions as to whether further delay is warranted. In all, Plaintiff's purported burden reduction is largely illusory. It is ultimately far less burdensome for the Court and a jury to decide this case on the merits within a year's time, as opposed to four (4) or more years from now when the procedural posture will be far more complicated.

IV. CONCLUSION

There is no benefit to the proposed four (4) year or more stay. The matters in dispute and Patents-at-Issue are straightforward and not overly complicated. A stay will do nothing more than cause a long delay. But after that long delay, the parties will be back in front of this Court seeking to re-open discovery and reschedule trial. The parties will essentially be starting all over again, regardless of the outcome of the reexamination proceedings. For all the foregoing reasons, Plaintiff's Motion to Stay Pending Reexamination should be denied.

---

delay tactic.

Dated: July 31, 2017.

Respectfully submitted,

/s/ Erick C. Howard

Joseph V. Mauch
Erick C. Howard
Arthur J. Shartsis
Admitted Pro Hac Vice
Shartsis Friese LLP
One Maritime Plaza
Eighteen Floor
San Francisco, CA 94111
Telephone: (415) 421-6500
jmauch@sflaw.com
ehoward@sflaw.com
ashartsis@sflaw.com

Michael J. Colitz, III
TRIAL COUNSEL
Florida Bar No. 164348
Cole Y. Carlson
Florida Bar No. 112863
GRAY ROBINSON, P.A.
401 E. Jackson Street, Suite 2700
Tampa, FL 33602
Telephone: (813) 273-5000
Facsimile: (813) 273-5145
michael.colitz@gray-robinson.com
cole.carlson@gray-robinson.com

Counsel for Plaintiff

CERTIFICATE OF SERVICE

I hereby certify that on July 31, 2017, I electronically filed the foregoing with the Clerk of Court by using the CM/ECF system, which will send a copy to all counsel of record.

/s/ Erick C. Howard
ATTORNEY

8022022.v3