EXHIBIT D

US008161702B2

(12) **United States Patent**
Eberle, III

(10) **Patent No.: US 8,161,702 B2**
(45) **Date of Patent: Apr. 24, 2012**

(54) **EXPANSION-COMPENSATING DECK FASTENER**

(75) Inventor: **Harry W. Eberle, III**, Califon, NJ (US)

(73) Assignee: **Blue Heron Enterprises LLC**, North Branch, NJ (US)

(*) Notice: Subject to any disclaimer, the term of this patent is extended or adjusted under 35 U.S.C. 154(b) by 0 days.

(21) Appl. No.: **12/952,876**

(22) Filed: **Nov. 23, 2010**

(65) **Prior Publication Data**

US 2011/0126486 A1 Jun. 2, 2011

Related U.S. Application Data

(63) Continuation of application No. 12/583,702, filed on Aug. 24, 2009, now Pat. No. 7,874,113, which is a continuation of application No. 10/446,514, filed on May 28, 2003, now Pat. No. 7,578,105, which is a continuation-in-part of application No. 10/393,100, filed on Mar. 20, 2003, now Pat. No. 6,851,884.

(51) **Int. Cl.**
E04F 15/22 (2006.01)
E04B 2/00 (2006.01)
F16B 9/00 (2006.01)

(52) **U.S. Cl.** **52/403.1**; 52/586.1; 52/586.2; 403/231

(58) **Field of Classification Search** 52/586.1, 52/586.2, 483.1, 480, 650.3, 403.1; 403/231, 403/232.1, 408.1
See application file for complete search history.

(56) **References Cited**

U.S. PATENT DOCUMENTS

1,186,463	A	1/1877	Dickinson
2,466,995	A	1/1892	Abramson
695,722	A	3/1902	Heilmann
1,184,080	A	5/1916	D'arcy
1,241,885	A	10/1917	Roeder
1,714,738	A	5/1929	Smith
1,723,306	A	8/1929	Sipe
1,990,001	A	2/1935	Rutten

(Continued)

FOREIGN PATENT DOCUMENTS

CA 2287104 A1 1/2001

(Continued)

OTHER PUBLICATIONS

Office Action in commonly owned U.S. Appl. No. 09/186,741 (now US patent 6402415) to Eberle, III dated Aug. 19, 1999.*

(Continued)

Primary Examiner — Mark Wendell
(74) *Attorney, Agent, or Firm* — Lerner, David, Littenberg, Krumholz & Mentlik, LLP

(57) **ABSTRACT**

The present invention is an anchoring biscuit device for joining three boards. It includes, (a) an at least partially flat horizontal top element having an imaginary center line, having opposite side walls, and having a top view footprint adapted to be inserted into grooves of adjacent boards; (b) at least one substantially vertical support member attached to the underside of the top element and extending downwardly therefrom for a predetermined length for joinder of two adjacent boards which contain the grooves for receiving portions of the top into the grooves; and (c) at least one compressive element located on the device, with at least one portion of the at least one compressive element, from a top view footprint, being located away from the imaginary center line and away from the vertical support member, wherein the compressive element is adapted to at least partially collapse under a predetermined compressive force.

25 Claims, 11 Drawing Sheets

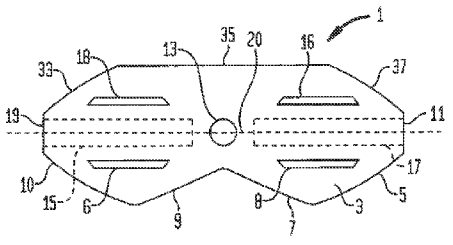

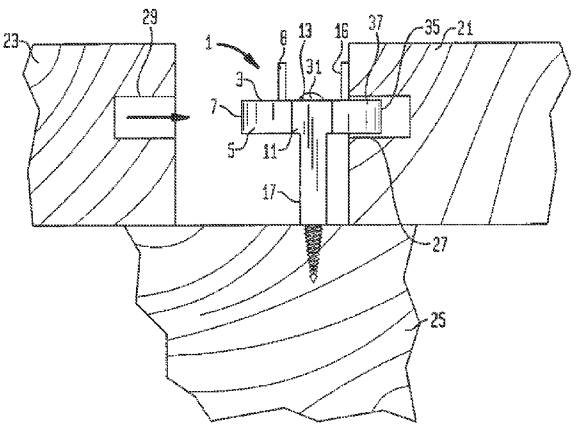

U.S. PATENT DOCUMENTS

2,201,129	A		5/1940	Weiland
2,332,081	A		10/1943	Hunt et al.
2,337,156	A		12/1943	Elmendorf
2,362,252	A		11/1944	Ellinwood
2,398,603	A		4/1946	Soderberg
2,406,387	A		8/1946	Lank
2,526,116	A		10/1950	Browne
3,045,294	A		7/1962	Livezey
3,319,983	A		5/1967	Zibell
3,619,963	A		11/1971	Omholt
3,705,002	A		12/1972	Varlonga
3,890,753	A		6/1975	Johansen
4,154,172	A		5/1979	Curtis, Jr.
4,449,346	A		5/1984	Tremblay
4,454,699	A		6/1984	Strobl
4,599,841	A		7/1986	Haid
4,641,988	A		2/1987	Ganner
4,682,458	A		7/1987	Sparrow
4,716,704	A		1/1988	Murr
5,004,027	A		4/1991	Legler et al.
5,056,286	A		10/1991	Bokor
5,071,280	A		12/1991	Turner
5,160,211	A		11/1992	Gilb
D331,470	S		12/1992	Mitchell et al.
5,182,891	A		2/1993	Slocum
5,243,804	A		9/1993	Therrien et al.
5,245,808	A		9/1993	Grunewald et al.
5,251,996	A		10/1993	Hiller et al.
5,359,954	A		11/1994	Kordelin
5,377,732	A		1/1995	Fujii et al.
5,419,649	A		5/1995	Gilb
5,458,433	A		10/1995	Stastny
5,480,117	A		1/1996	Fleming, III
5,529,428	A		6/1996	Bischof
5,564,248	A		10/1996	Callies
5,603,580	A		2/1997	Leek et al.
5,619,834	A		4/1997	Chen
5,660,016	A		8/1997	Erwin et al.
5,704,181	A		1/1998	Fisher et al.
5,730,544	A	*	3/1998	Dils et al. 403/292
5,743,672	A		4/1998	Cline
6,012,256	A		1/2000	Aschheim
6,032,431	A		3/2000	Sugiyama
6,363,677	B1		4/2002	Chen et al.
6,402,415	B1		6/2002	Eberle, III
6,442,908	B1		9/2002	Naccarato et al.
6,449,918	B1		9/2002	Nelson
6,460,306	B1		10/2002	Nelson
6,470,641	B1		10/2002	Faure
6,471,434	B2		10/2002	Chin et al.
D470,039	S		2/2003	Pelc
6,651,400	B1		11/2003	Murphy
6,711,864	B2		3/2004	Erwin
D488,373	S		4/2004	Eberle
6,810,633	B2	*	11/2004	Harris, Sr. 52/489.2
6,851,884	B2	*	2/2005	Eberle 403/231
6,871,467	B2		3/2005	Hafner
7,052,200	B2		5/2006	Harris
2002/0059766	A1		5/2002	Gregori

FOREIGN PATENT DOCUMENTS

CH	278212	A	10/1951
DE	372483	C	3/1923
DE	4036338	A1	6/1991
EP	863317	A2	9/1998
FR	1217468	A	5/1960
FR	1556252	A	2/1969
FR	2647837	A1	12/1990
GB	1350754	A	4/1974
GB	1567008	A	5/1980
GB	2124672	A	2/1984
JP	4371657	A	12/1992
JP	07189451	A	7/1995

OTHER PUBLICATIONS

Invoice for the sale of certain Eb-Ty Fasteners dated Aug. 26, 1997.
Engineering Drawing depicting an Eb-Ty Fastener dated Jun. 15, 1997.
Harry W. Eberle, III et al. v. *KK manufacturing Co.*, et al., Civil Action No. 03-5809 (FLW-TJB), Invalidity Contention applied to U.S. Patent No. 6,402,415 and U.S. Patent No. 6,851,884.

* cited by examiner

FIG. 1

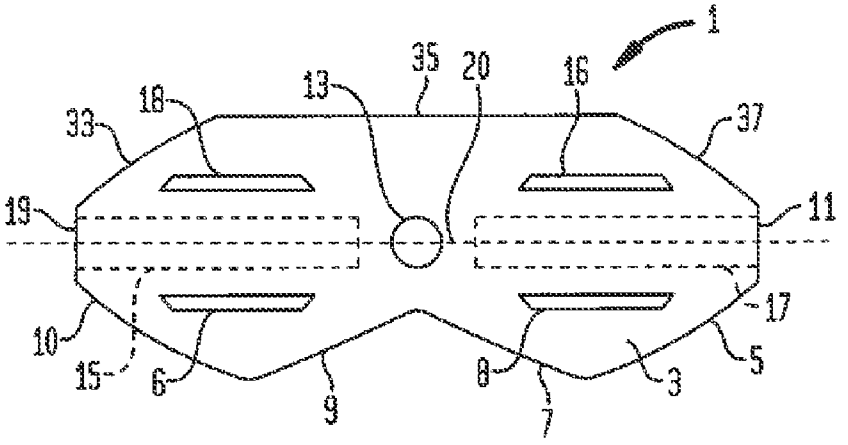

FIG. 2

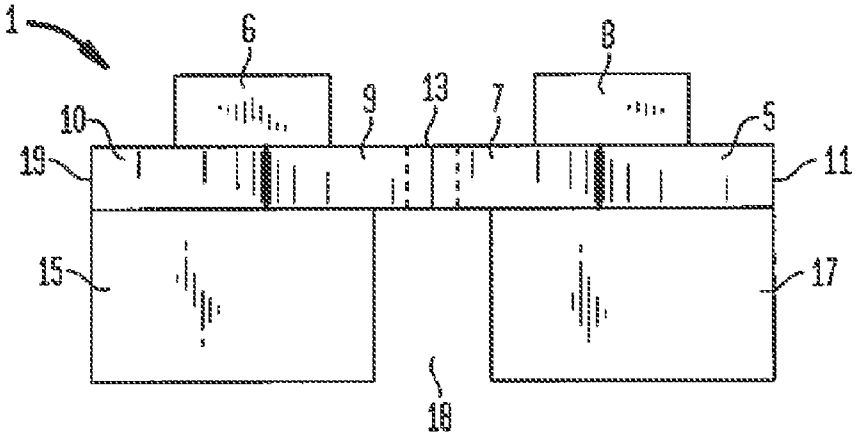

FIG. 3

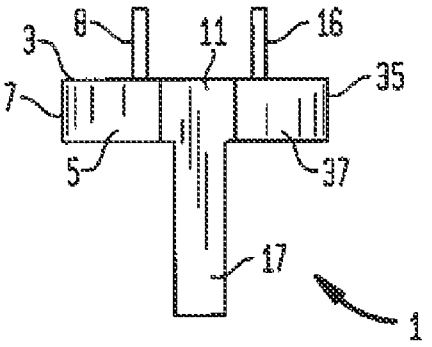

FIG. 4A

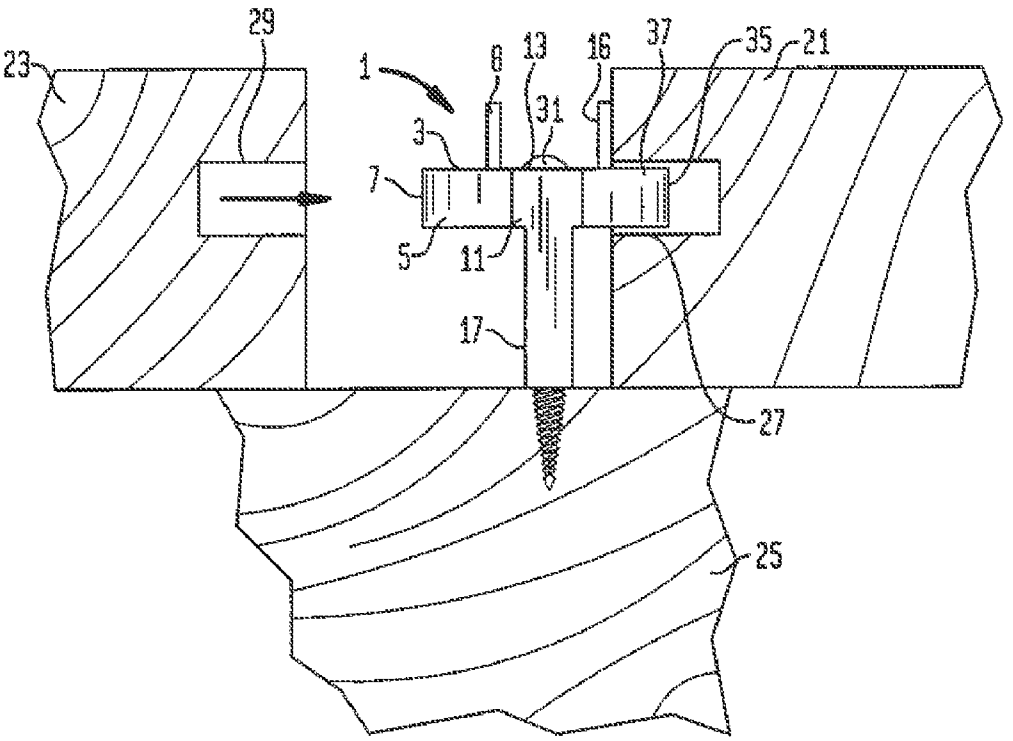
29
23
1
8
13
16
37
35
21
31
3
7
5
11
17
27
25

FIG. 4B

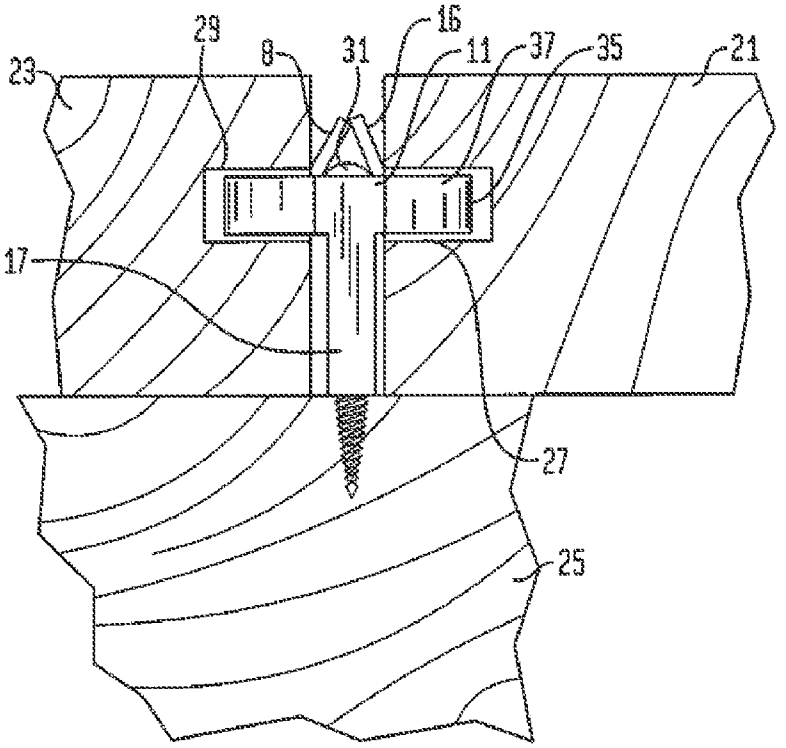
29
16
8
31
11
37
35
21
23
17
27
25

FIG. 5

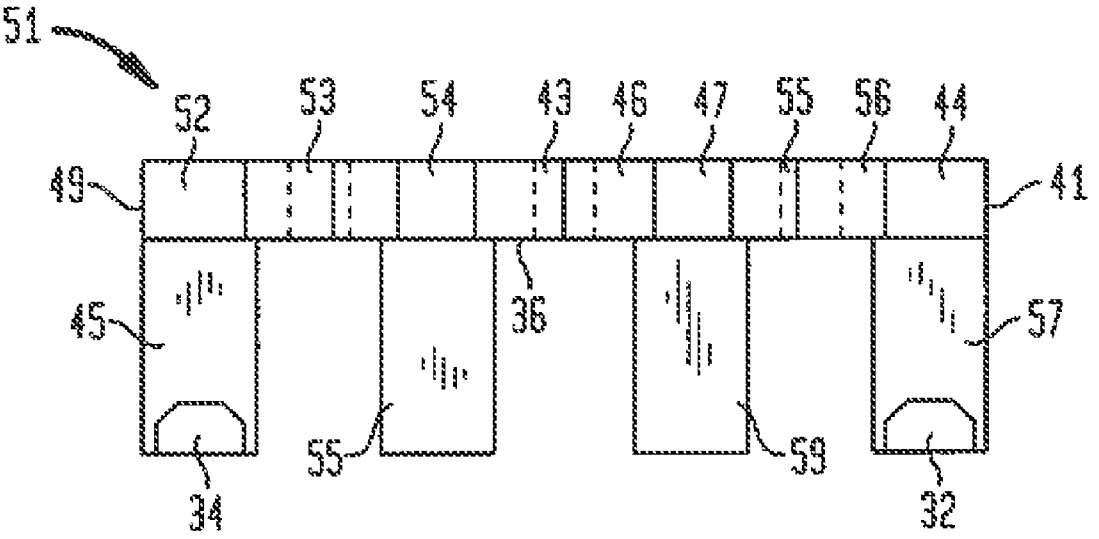
51
52
53
54
43
46
47
55
56
44
49
41
45
36
57
55
59
34
32

FIG. 6

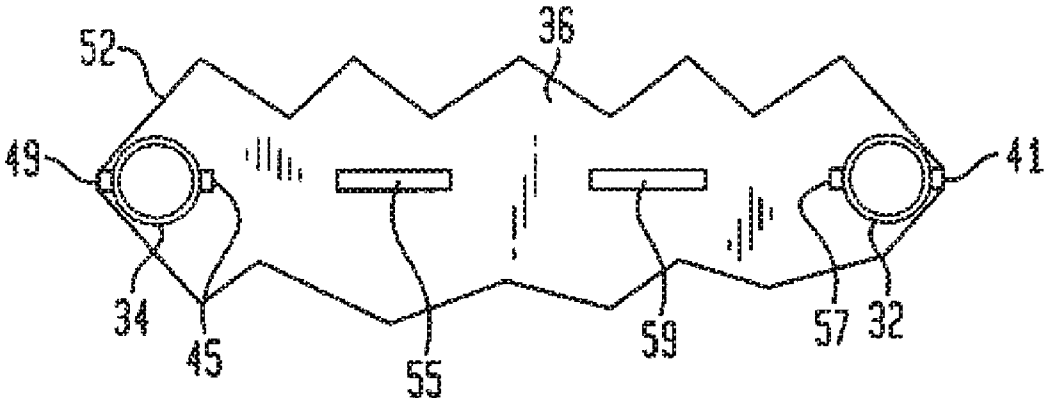
36
52
49
41
34
45
55
59
57
32

FIG. 7

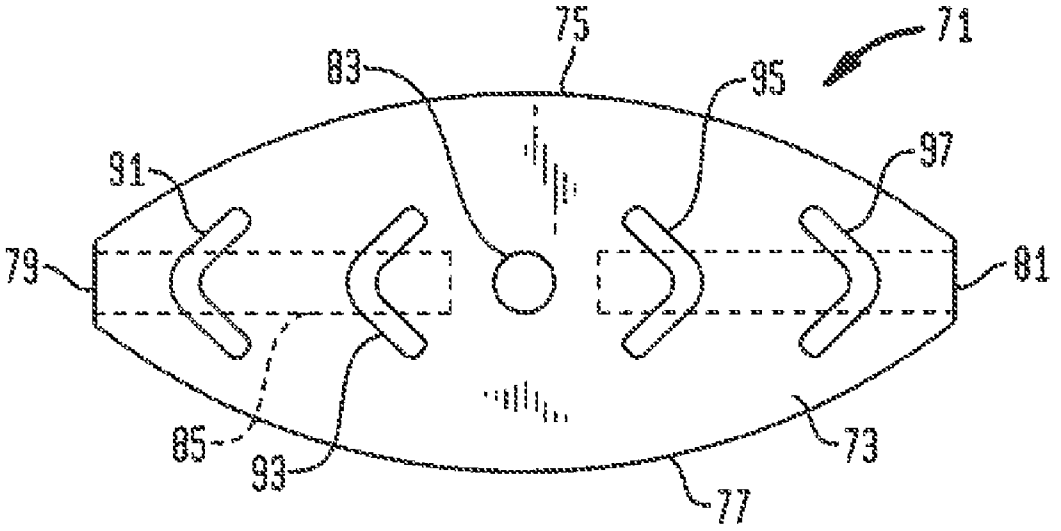

FIG. 8

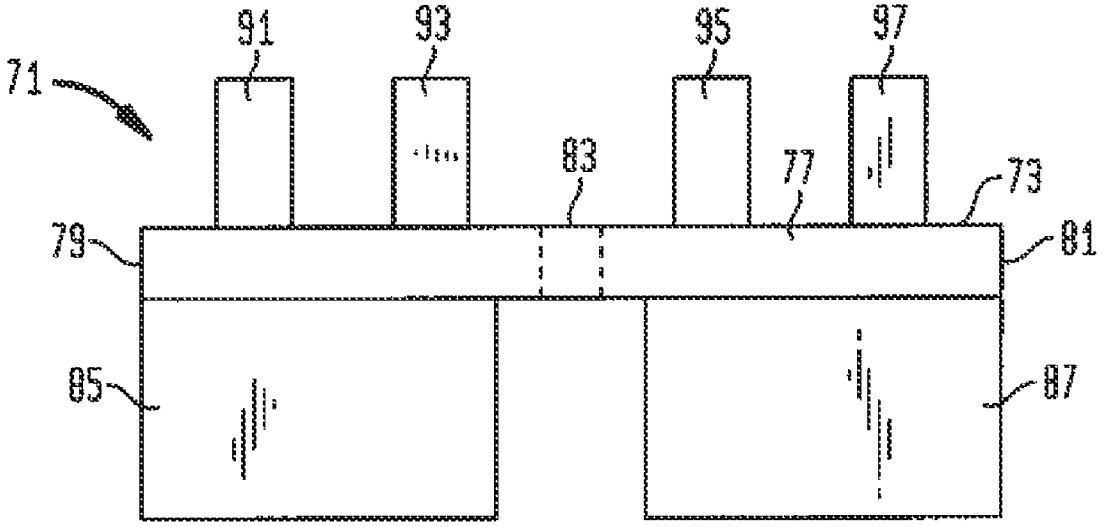

FIG. 9A

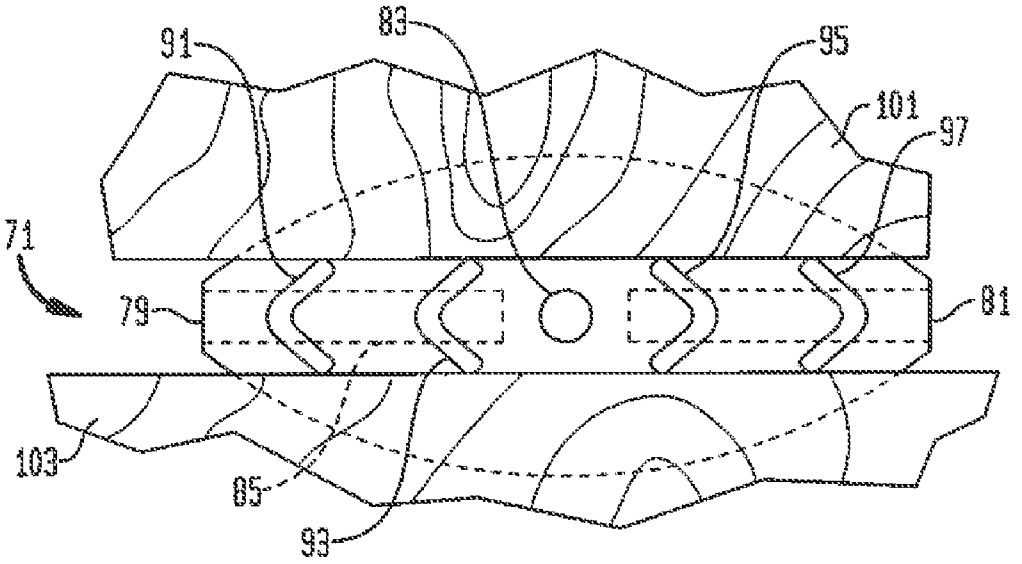

FIG. 9B

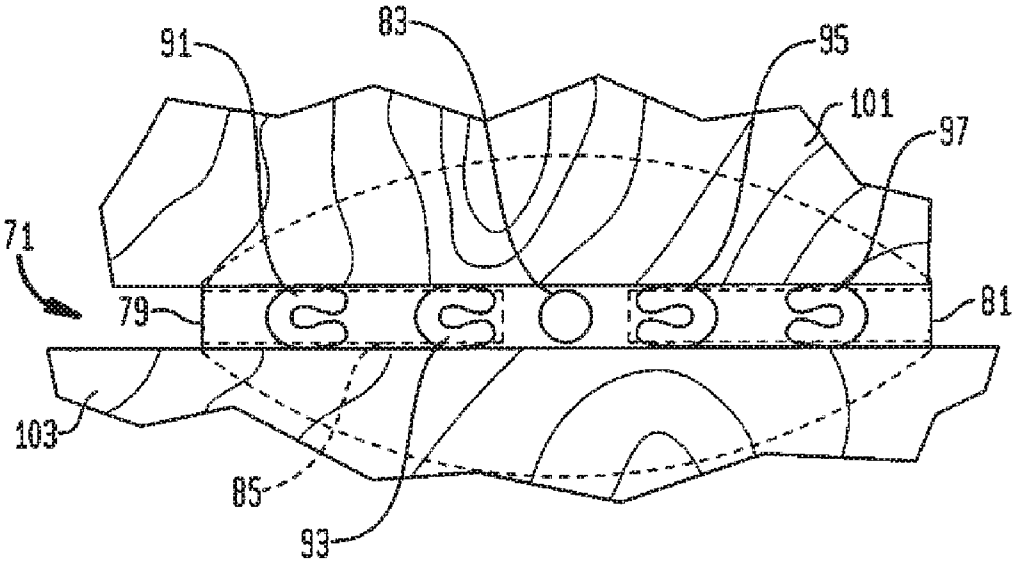

FIG. 10

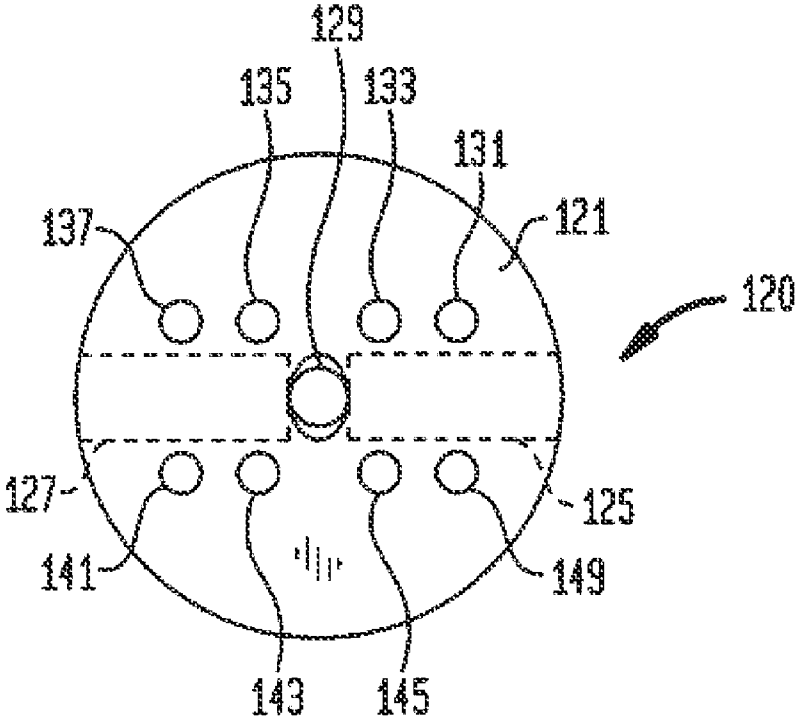
129
135
133
131
137
121
120
127
125
141
149
143
145

FIG. 11

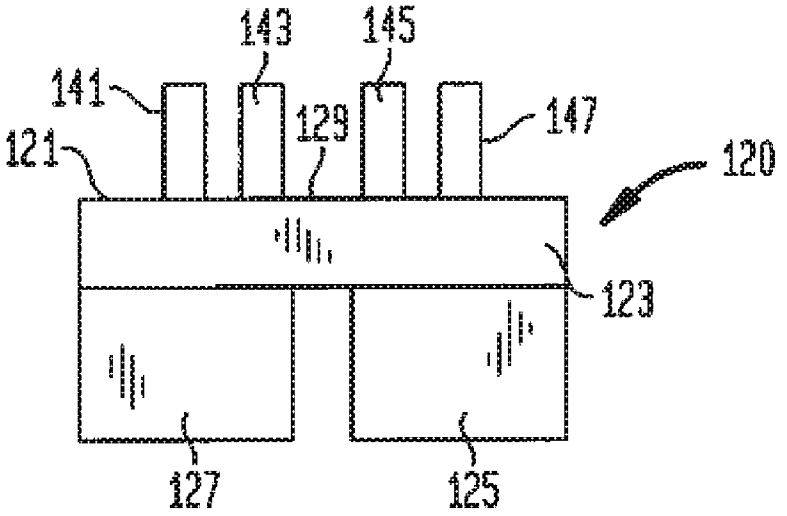
143
145
141
129
147
121
120
123
127
125

FIG. 12

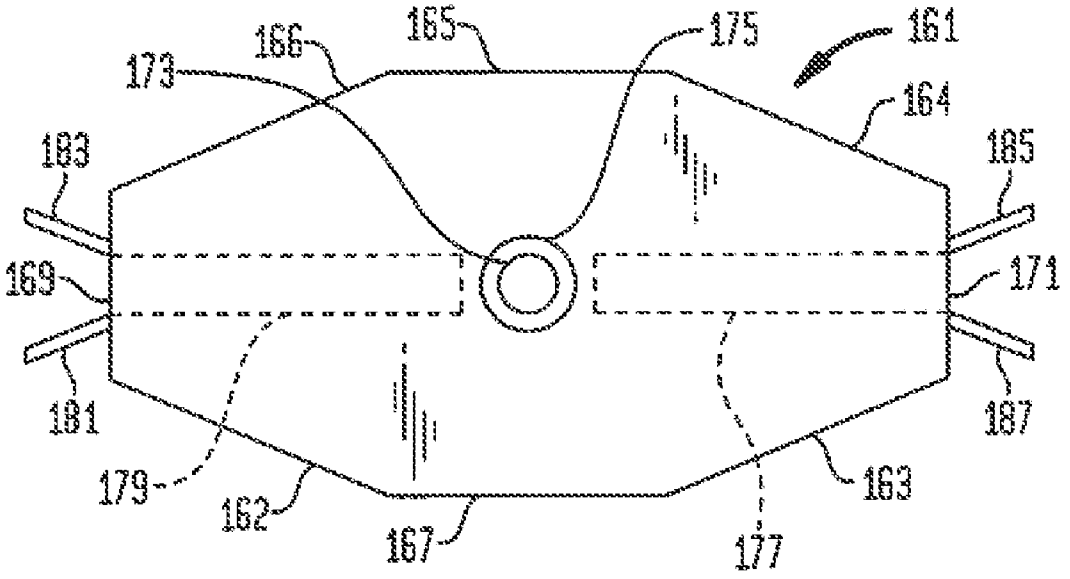
165
175
161
166
173
164
183
185
169
171
181
187
179
162
167
177
163

FIG. 13

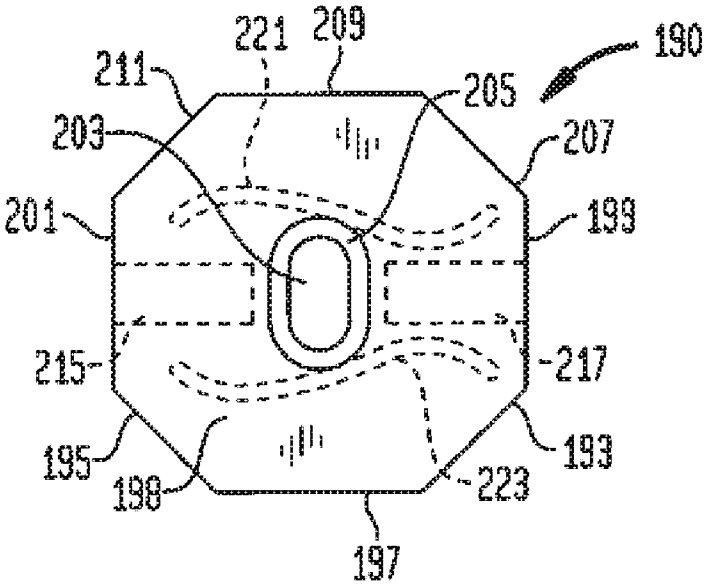
221
209
190
211
205
203
207
201
199
215
217
195
193
198
223
197

FIG. 14

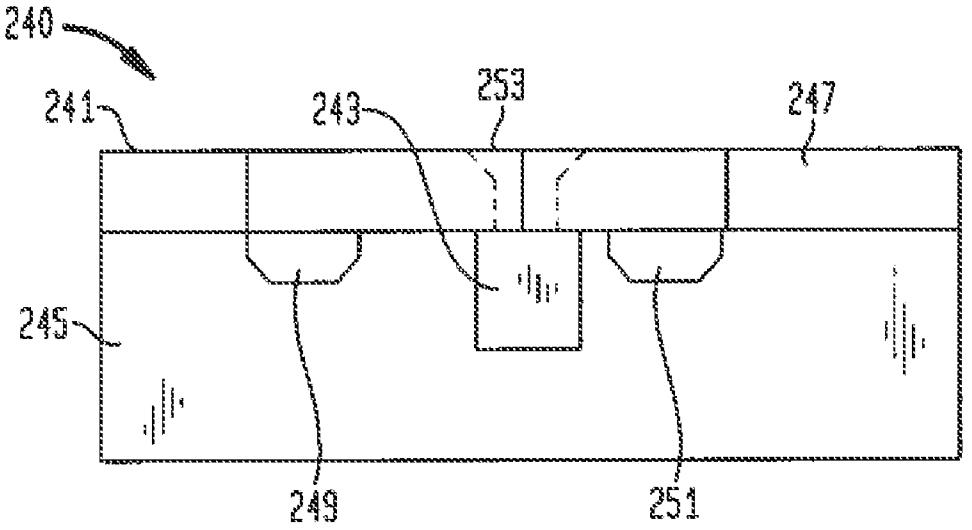
240
241
243
253
247
245
249
251

FIG. 15

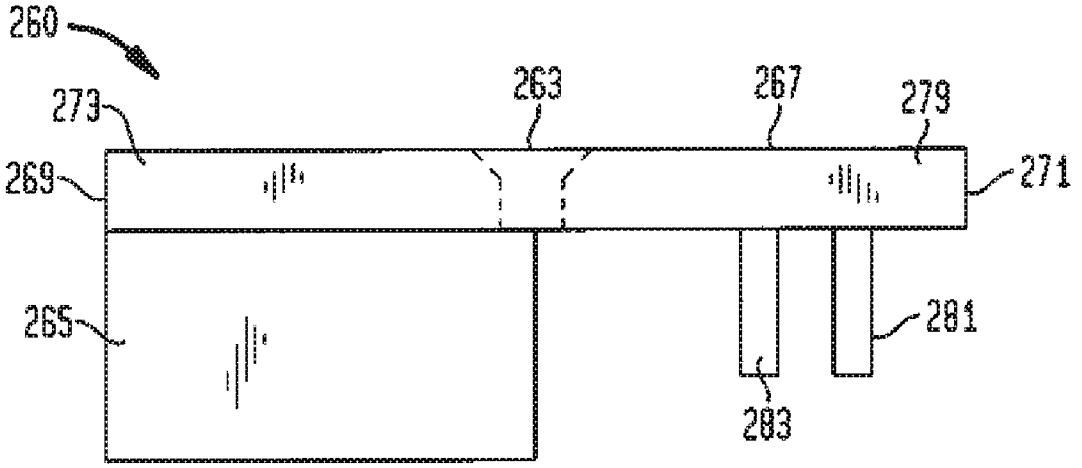
260
273
263
267
279
269
271
265
281
283

FIG. 16

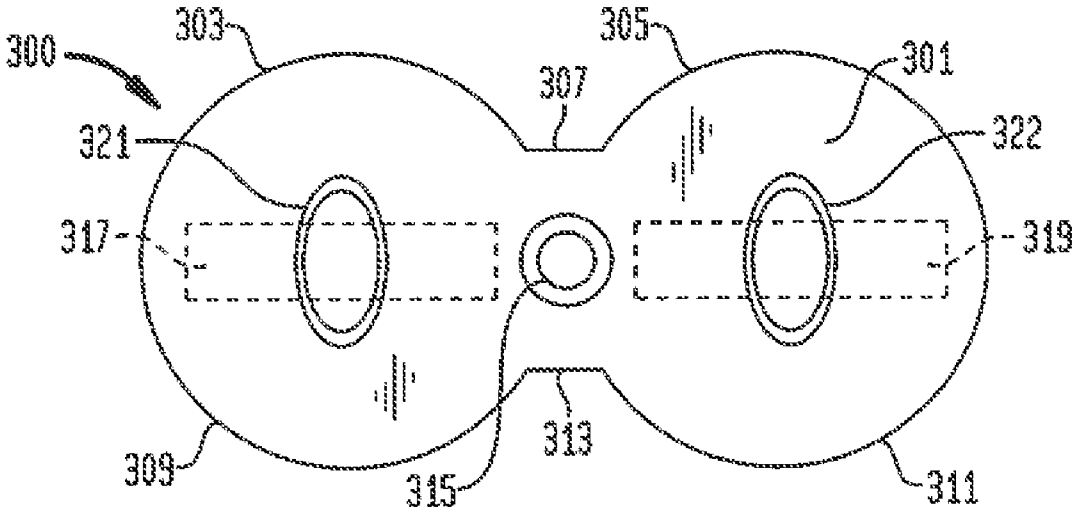
300
303
305
301
307
321
322
317
319
309
313
315
311

FIG. 17

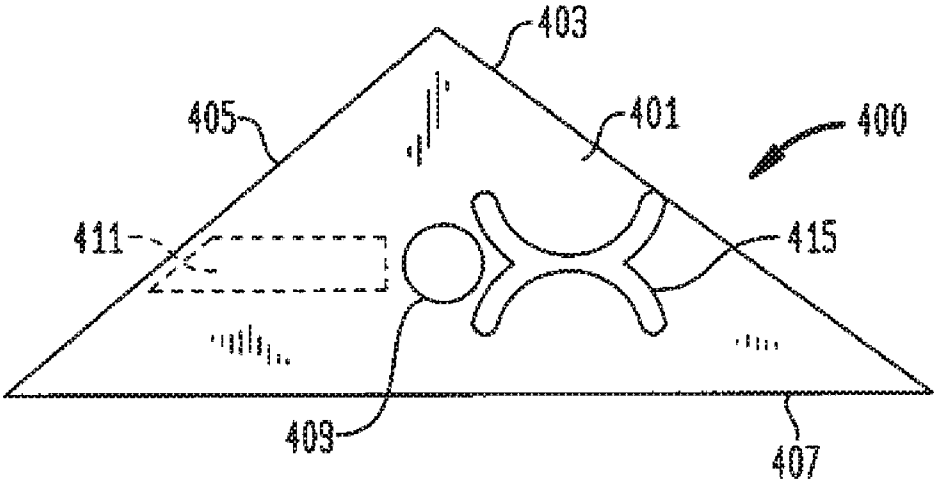
403
405
401
400
411
415
409
407

FIG. 18

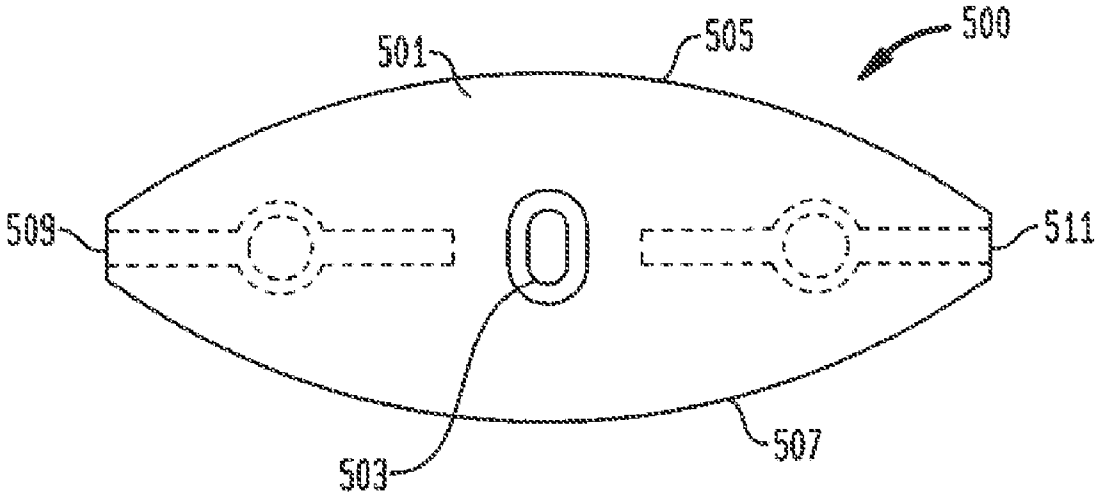

FIG. 19

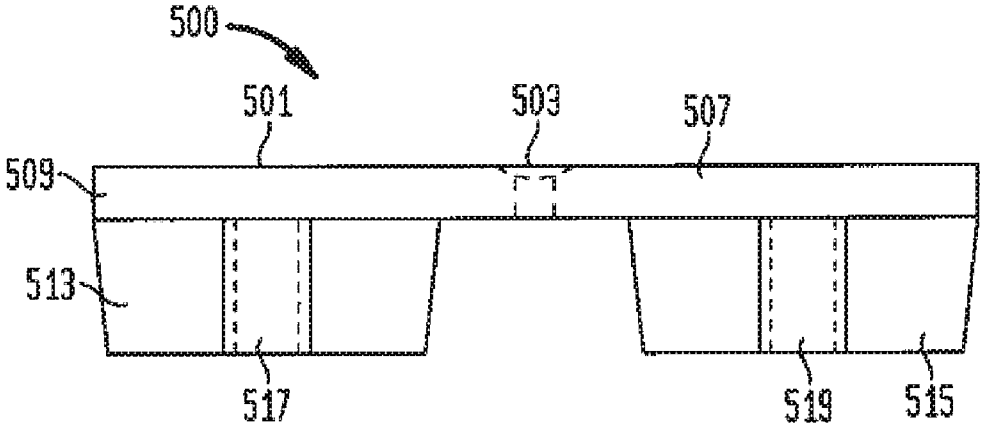

FIG. 20

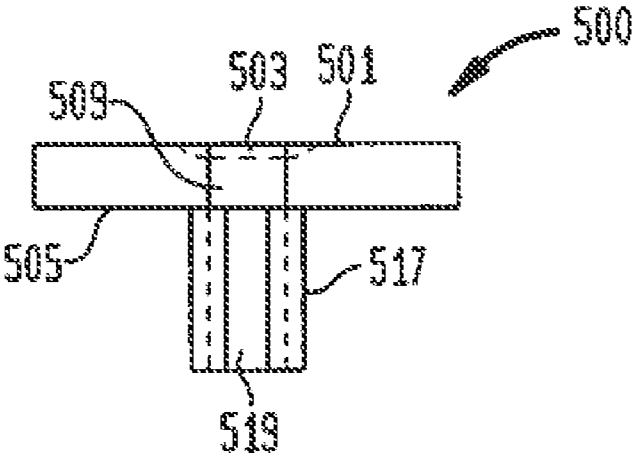
500
503
501
509
505
517
519

FIG. 21

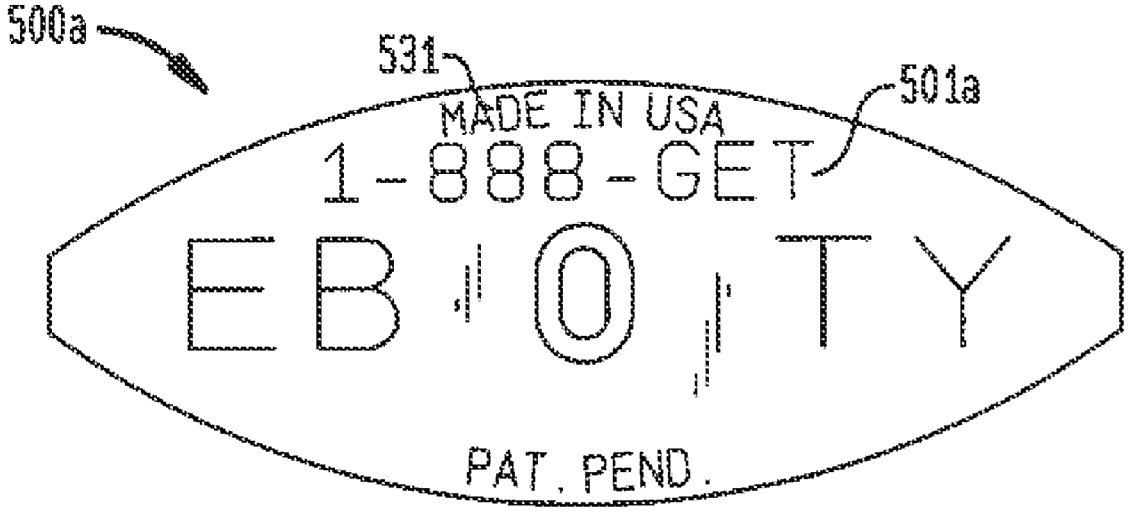
500a
531
MADE IN USA
501a
1-888-GET
EB O TY
PAT. PEND.

EXPANSION-COMPENSATING DECK FASTENER

CROSS-REFERENCE TO RELATED APPLICATIONS

The present disclosure is a continuation of co-pending U.S. patent application Ser. No. 12/583,702, filed on Aug. 24, 2009, which, in turn, is a continuation of U.S. patent application Ser. No. 10/446,514, filed on May 28, 2003, now U.S. Pat. No. 7,578,105, which, in turn, is a continuation-in-part of U.S. patent application Ser. No. 10/393,100, filed on Mar. 20, 2003, now U.S. Pat. No. 6,851,884. Each of these applications is hereby incorporated herein in its entirety by reference thereto.

BACKGROUND OF THE INVENTION

1. Field of the Invention

The present invention is directed to an improved biscuit for joining adjacent boards. More specifically, the invention is an anchoring biscuit device that has the ability for pre-setting distances between adjacent boards and attaching to at least one board by means in addition to the biscuit itself. The anchoring biscuit device physically joins two adjacent boards in the same plane to a third, supporting board. The anchoring half-biscuit device joins two adjacent boards at right angles to one another. Further, the present invention anchoring biscuit includes compressive elements to accommodate swelling and expansion of boards after installation.

U.S. Pat. No. 6,402,415, issued to the present inventor herein covers such biscuit devices having opposite side walls in the shape of arcs. These would include side walls with arcs and flat ends, side walls with arcs and arc ends, e.g. circles, ellipses, etc. The present invention covers biscuit-shaped devices with side walls that may have the same top view footprint as the Eberle U.S. Pat. No. 6,402,415 devices, and covers anchoring devices that may not have opposite arcs, and may or may not have biscuit shapes. However, all of the present invention devices do include at least one compressive element, namely, a portion of the device that will collapse or move under compression (from opposing expansion or swelling of wood).

2. Information Disclosure Statement

The following patents are representative of the state of the art for wood joining devices, equipment and methods:

U.S. Pat. No. 1,184,080 to D'Arcy describes a structure of the class described, the combination of frame pieces disposed at an angle to each other and plate-like corner irons having angularly disposed flanges, said corner irons being arranged in opposed pairs on the sides of and secured to the ends of meeting frame pieces with their flanges engaging the inner edges thereof in overlapping telescoping relation to each other, the inner flanges having vertical nail slots therein and brads on their edges driven into the frame pieces, the outer flanges having nail perforations opposite the nail slots, there being nails disposed through the said perforations and slots and driven into the frame.

U.S. Pat. No. 2,332,081 to G. M. Hunt et al. is directed to a wooden panel. It is described as a panel comprising wooden strips joined along their edges with glue, each strip having at least one groove in its edge matching groove in the edge of the adjoining strip, an asbestos millboard spline fitted in the matching grooves and bridging the joint between the strips, crossbands covering the strips on both sides of the panel, and veneers covering the crossbands.

U.S. Pat. No. 2,362,252 to Ellinwood describes a wall structure of the character described comprising a pair of adjacent wallboard panels having meeting edges, each of said panels being formed with a groove opening into its meeting edge, the groove in each panel providing an outer lip and an inner lip, said outer lips being in abutting relation, a joining strip permanently secured to the under surface of said outer lips, said inner lips being spaced, a T-shaped connecting member movably positioned in said groove and having a base in spaced relation to said inner lips, and means for anchoring said connecting member to a structural element.

U.S. Pat. No. 2,398,603 to Soderberg describes a joining staple, comprising a metal body having at least two portions extending at right angles to each other and at least two teeth carried upon each of said portions, each of said teeth consisting of a flat substantially rectangular body having a cutting edge extending substantially parallel to its body portion, the cutting edges of all of said teeth being located in one plane, each of said portions having another cutting edge extending between the teeth of that portion, the second mentioned cutting edges being also located in one plane.

U.S. Pat. No. 2,406,387 to Lank describes the method of constructing a plurality of wooden posts each of which has a connector element incorporated therein adjacent each end thereof which method comprises forming a plurality of longitudinally extending grooves in one side of each of a pair of wooden blanks from which the posts are to be formed, forming a transverse groove adjacent each end of said side of each of said blanks with the transverse grooves intersecting the longitudinal grooves, providing a pair of connector retaining members with a plurality of seats for receiving connector elements, the number and spacing of said seats in each of said connector retaining members conforming to the number and spacing of the longitudinal grooves in each of said blanks, placing connector elements in each of said seats, positioning said blanks with their grooved sides together and with said connector retaining members in said transverse grooves, bonding said blanks together, and severing the thus bonded assembly along longitudinal lines intermediate said longitudinal grooves.

U.S. Pat. No. 4,641,988 to Ganner is directed to a fitting for releasably joining two structural components. It is illustrated for releasably joining two structural components particularly plate-shaped structural components which extend at a right angle relative to one another, a fitting has a preferably cylindrical locking element which can be inserted either directly in a bore in the first structural component or it can be inserted indirectly in a housing, and a holding piece with a holding projection anchored in the second structural component. In the assembled position, the holding projection & abuts against one or two gripping surfaces of the locking element which gripping surfaces are of, for example, eccentric shape, and the holding projection is pulled toward the locking element when the locking element is turned. The holding piece is constructed plate-shaped and is insertable in a slot in the second structural component.

U.S. Pat. No. 4,682,458 to Sparrow describes a floor composed of parallel spaced beams having flanges and blocks of polystyrene foam which are laid on the flanges to bridge the gaps between the beams. Boards are laid on the polystyrene blocks, and are supported by the blocks, which form load-bearing members of the floor. The blocks may have flanged portions extending over the beams, so as to provide heat insulation.

U.S. Pat. No. 5,004,027 to Legler et al. illustrates a biscuit joiner. It is described as a biscuit joiner for cutting semi-elliptical slots in opposing edges of workpieces which are to

be joined along those edges includes a housing adapted to be mounted upon the quill of a multipurpose woodworking tool, which housing encloses a rotary saw blade adapted to be attached to a spindle projecting from the quill on which the housing is mounted. A spring loaded guide projects from the front face of the housing and has a slot therethrough, so that when the front face of the guide is engaged by an edge of a workpiece to be slotted the guide can be pushed inwardly against spring pressure, allowing the rotary saw blade to be exposed and form a slot in the edge of the workpiece. Adjustable stops are provided on the guide so that a desired depth of cut will automatically be made after adjustment. An alternative construction of this biscuit joiner is especially adapted for use in conjunction with a conventional drill press, with the arbor which carries the saw blade being clamped in the chuck on the drive spindle of the drill motor.

U.S. Pat. No. 5,182,891 to Slocum describes a flooring construction which is provided having a unitary construction with a top layer providing a finished flooring surface and an insulation layer adjacent the top layer. The flooring panel includes an upper portion and a lower portion. The upper portion has a larger dimension than the lower portion and extends outwardly beyond the lower portion. A recessed portion between the upper portion and the lower portion defines a channel. A plurality of interlock support elements having a vertical web and an upper horizontal flange are arranged so that the horizontal flange extends into the channel. The vertical web extends below the lower portion to raise the flooring.

U.S. Pat. No. 5,251,996 to Hiller et al. describes a connecting element for connecting two parts generally in a connection plane has a first portion for connecting the element relative to a first of the parts and second portion for connecting the element relative to the second part. The second portion includes actuation members which on relative movement of the parts substantially along the connection plane urge the parts forcefully towards each other.

U.S. Pat. No. 5,377,732 to Fujii et al. illustrates a wood joining structure and method thereof. It is described as a technique is provided for joining wood members. A plurality of slits are formed on the end portions of wood pieces desired to be joined, and the end portions are abutted with corresponding slits in alignment to form a common surface. Each of the abutted wood end portions is fixed by temporary fixing means to a desired joining state. Thereafter, an adhesive agent is applied into the interior surfaces of the slits. Connecting plates, e.g., made of a reinforced plastic material coated with the adhesive agent, are inserted into the aligned slits. The adhesive agent is then hardened.

U.S. Pat. No. 5,458,433 to Stastny explicates a biscuit and joint made using same. It is described as a biscuit having octagonal outer periphery is used to form a joint between first and second workpieces. The biscuit fits within arcuate slots formed in the workpieces, with glue placed in the slots and/or on the biscuit before the joint is put together. The biscuit is made of an anhydrous compressed wood.

U.S. Pat. No. 5,480,117 to Fleming, III describes a bracket for mounting a rotary lock member in the frame of a panel which is provided. The bracket is a preferably U-shaped body having a base and two legs extending therefrom. The inner dimension of the bracket is chosen to allow insertion of a rotary lock member therein. Panel engaging steps and protrusions are located on the outside surface of each leg for engaging the frame material. The legs of the bracket are biased inwardly towards one another, such that when a locking member is inserted therein, the legs are pressed outwardly, driving the protrusions into the frame material. A number of bores are located in the bracket to allow supplemental locking members to lock the bracket to the frame.

U.S. Pat. No. 5,529,428 to Bischof is directed to a metallic structural element for connecting workpieces consisting of wood, woodworking material or plastic. It is described as a metallic structural element for connecting workpieces consisting of wood, woodworking material or plastic, consisting of a lamellar part, which provides the non-positive connection with the first workpiece provided with a groove and a transverse hole, and a bolt-like part which, through screwing or pinning, realizes the non-positive connection with the second workpiece provided with a longitudinal hole. The lamellar part has, in the center, a hole which is at right angles to the plane of the lamella and is intended for fixing in the groove of the workpiece. Variants having a wing-like long or rectangular short lamellar part and a bolt-like part in the form of a conical wood screw, cylindrical screw, screw having a metal thread, threaded sleeve or pin. Accessories: screwing tool and drilling template.

U.S. Pat. No. 5,660,016 to Erwin et al. describes an extruded plastic decking plank for mounting to an underlying support structure, the plank having a rigid foam core, a resilient outer plastic shell, and a clamping portion for securing the plank to the support structure. The top surface of the plank can be provided with a non-slip surface. The invention also includes an attachment system for securing such decking planks to a support structure by engaging the clamping portions of the decking planks onto clamps or hold down blocks which are secured onto the support structure, and which permit relative motion between the planks and the structure in the planks' lengthwise direction to prevent stress and buckling caused by uneven expansion.

U.S. Pat. No. 6,402,415, to Eberle, the same inventor herein, describes an anchoring biscuit device for joining three boards. It includes, (a) a first substantially flat horizontal top element having a generally biscuit-shaped configuration, (b) at least one substantially vertical support member attached to the underside of the top element and extending downwardly therefrom for a predetermined length for joinder of two adjacent boards which have been pre-cut with biscuit receiving slots, and (c) an attachment orifice located at least on the top element for attachment of the anchoring biscuit device to a support board for anchoring and support of the two adjacent boards. In one preferred embodiment, a top bevel is included at the orifice to permit angled screwing at positions other than vertical positions. In other embodiments, the screw orifice will have an oval or elongated shape to likewise enable screwing at angles other than vertical. In yet another preferred embodiment, the orifice will both be beveled and elongated.

U.S. Design Pat. No. 470,039 to Robert Pelc shows two anchoring biscuit devices of the U.S. Pat. No. 6,402,415 Eberle type, one having a circular footprint and the other having an elliptical footprint.

Notwithstanding the prior art, the present invention is neither taught nor rendered obvious thereby.

SUMMARY OF THE INVENTION

The present invention is an anchoring biscuit device for joining three boards. It includes, (a) an at least partially flat horizontal top element having opposite side walls, and, from a top view, having a footprint adapted to be inserted into grooves, (b) at least one substantially vertical support member attached to the underside of the top element and extending downwardly therefrom for a predetermined length for joinder of two adjacent boards which contain grooves for receiving portions of said top into said grooves, and, (c) at least one

compressive element located on said device with at least a portion located away from said imaginary centerline, said compressive element being adapted to at least partially collapse upon compressive force. In some embodiments, there is also an attachment orifice located at least on the top element for attachment of the anchoring biscuit-device to a support board for anchoring and support of the two adjacent boards. In one preferred embodiment, a top bevel is included at the orifice to permit angled screwing at positions other than vertical positions. In other embodiments, the screw orifice will have an oval or elongated shape to likewise enable screwing at angles other than vertical. In yet another preferred embodiment, the orifice will both be beveled and elongated. In other embodiments, there is no preformed orifice, and the device may be attached by a screw or other fastener being driven through the device, or attached by adhesive or other means, or combinations thereof.

BRIEF DESCRIPTION OF THE DRAWINGS

The present invention should be more fully understood when the specification herein is taken in conjunction with the drawings appended hereto wherein:

FIG. **1** illustrates a top view of one preferred embodiment of the present invention anchoring device,

FIG. **2** illustrates a side view, and

FIG. **3** illustrates an end view thereof;

FIG. **4**A shows an end view of the present invention device shown in FIGS. **1** through **3** but being attached to a joist and a first deck board and about to be attached to a second deck board where both deck boards are supported by that joist;

FIG. **4**B shows an end view of the same present invention device as above, but fully installed and after the adjacent beams have swollen and collapsed the compressive elements;

FIGS. **5** and **6** show a side view and a bottom view, respectively, of an alternative embodiment present invention anchoring biscuit device;

FIGS. **7** and **8** show top and side views of another alternative present invention anchoring biscuit device;

FIGS. **9**A and **9**B show top views of the FIG. **7** and FIG. **8** present invention device, installed with beams, before and after beam expansion;

FIGS. **10** and **11** illustrate top and side views of another present invention device;

FIG. **12** and FIG. **13** show top views of two different embodiment present invention anchoring biscuit devices having compressive elements located below the substantially flat top element;

FIGS. **14** and **15** show additional alternative embodiment present invention anchoring devices, in their side views; and,

FIGS. **16** and **17** show more present invention alternatives in their side views; and,

FIGS. **18**, **19**, **20**, and **21** show top, side, end and embossed top views of another preferred embodiment present invention anchoring device.

DETAILED DESCRIPTION OF THE PRESENT INVENTION

In FIG. **1**, there is shown a top view of present invention anchor biscuit device **1**. Device **1** includes a top element **3** having a flat top surface as shown, and a top view shape of a biscuit. It also includes a first wall with segments **5**, **7**, **9** and **10**, with wall segments **5** and **7** in the shape of arcs having predetermined radii and predetermined arc lengths, and wall segments **7** and **9** having flat edges (straight surfaces). There is a second, opposite wall having segments **33**, **35** and **37**, with **33** and **37** being arcs, and **35** being a straight flat surface. They are not parallel to their segments directly opposite, i.e., opposite as determined at a 90° angle to imaginary center line **20**.

Top element **3** also includes an attachment means, in this case, screw hole **13** located on center. This enables the user to nail or screw device **1** into a joist, as more fully described in conjunction with FIG. **4** below. Alternatively, device **1** could simply have an area where a screw could be forced through, without a pre-formed orifice.

Top element **3** includes four upwardly projecting compressive elements **6**, **8**, **16** and **18**. These are located opposite one another, as shown, are located away from imaginary center line **20**. Also, they are located away from the vertical support members **15** and **17** (from top view) and are further away from the vertical support members at their outermost portions, from the centerline, than the outermost portions of the vertical support elements. This concept applies to the other present invention devices described below, as well.

FIGS. **2** and **3** show side and end views, respectively of device **1** shown in FIG. **1**. Thus, device **1** includes vertical support members **15** and **17** with a space **18** there between to permit a screw or nail to pass through screw hole **13** into a joist or support board. Vertical support members **15** and **17** have a predetermined height so as to rest on a joist in such a way as to establish biscuit top element **3** at a predetermined height from the joist for attachment of two adjacent boards thereto which have pre-cut biscuit slots. The device such as device **1** are not set for full nesting (i.e., do not have total footprint identity) with the biscuit cut, and need only have sufficient overhang on each side of the centerline **20** to catch and anchor a board by at least partially fitting into a cut out of a deck or other board. The compressive elements **6**, **8**, **16** and **18** act as initial spacers for the two adjacent boards.

FIG. **4**A shows present invention device **1** from the prior Figures, with identical parts identically numbered. Top element rear biscuit wall **35** is partially inserted into pre-cut biscuit slot **27** of horizontal beam **21**, as shown. Compressive elements **16** (and **18**, not shown) place beam **21**. Screw **31** is inserted into screw hole **13** and into joist beam **25**. This anchors device **1** to joist beam **25** and establishes the elevation of top element **3** so as to match with biscuit slot **27**. Beam **23** will be placed atop joist beam **25** and adjacent to beam **21** by being slid into position with wall segments **5**, **7**, **9** and **10** at least partially fitting into slot **29**, and the bottom of beam **23** resting on joist **25**. By this method, device **1** attaches all three boards to one another as the side wall aspects are sufficiently tight-fitting to anchor the boards. Thus, for example, decking boards may be attached without the need for nails or screws entering the beams from the top, creating a hidden fastening system.

Compressive elements **8** (and **6**, not shown in FIG. **4**) place beam **23**. In other words, the compressive elements **6**, **8**, **16**, **18** space the beams **21** and **23** further apart than the vertical support members **15** and **17** would in their absence. These beams **21** and **23** might expand due to damp weather, rain, capture of moisture, high humidity, seasonal changes, shifts, etc. When this occurs, compressive elements will be pushed toward one another and collapse, e.g. in excess of 10 foot pounds psi, or some other preset parameter. The collapse of compressive elements permits the beams to close in on one another to the sides of the vertical support members. This is clearly illustrated for the FIG. **4**A embodiment, in FIG. **4**B. Here, compressive elements have been forced to collapse inwardly by expanding beams **21** and **23**, as exemplified by collapsed compressive elements **8** and **16**. All parts are identically numbered as shown in the foregoing Figures.

FIG. **5** shows an alternative embodiment present invention device **51** which has multiple screw holes **43**, **53** and **55** located in a straight line on center of top element **47**. It includes front and back ends **41** and **49**, and it has a plurality of vertical support members **45**, **47**, **57** and **59**, on top underside **36** with spaces therebetween for screw or nail insertions. Vertical support members **45** and **57** include compressive elements **34** and **32**, as shown. FIG. **6** shows a bottom view with identical numbering. Note that compressive elements **32** and **34** are essentially hollow cylinders in this embodiment. The side walls have a footprint of sawteeth on both sides. On the side out of the drawing, segments **52**, **53**, **54**, **43**, **46**, **47**, **55**, **56** and **44** form the sawteeth. Segments directly opposite one another are mostly non-parallel. Device **51** is used in the same manner as device **1** described above with respect to FIGS. **4**A and B, except that the compressive elements **32** and **34** collapse on the underside of the device, inwardly between portions of a single vertical support member.

FIGS. **7** and **8** show top and side views of an alternative embodiment present invention anchoring device **71**. In FIG. **7**, there is shown a top view of present invention anchor biscuit device **71**. Device **71** includes a top element **73** having a substantially flat top surface as shown, and a top view shape of a biscuit. Thus, it includes wall segment (an arc), on one side and wall segments **77** (an opposing arc), and on the opposite side. Segment **62**, for example, is non-parallel to segment **66**. There are flat ends **79** and **81**, as shown.

Top element **71** of device **71** in FIG. **7** also includes an attachment means, in this case, screw hole **83** located on center. It also includes fount chevron-shaped compressive elements **91**, **93**, **95**, and **97**. These compress if adjacent boards expand and enable extra spacing to be achieved during installation to accommodate any future wood expansion that may occur.

In FIG. **8**, there is shown a side view of the present invention anchor biscuit device **71**. Device **71** includes a top element **73**, showing the height and depth of compressive elements **91**, **93**, **95**, and **97**.

FIG. **9**A shows a top view of device **71** with installed beams **101** and **103**, and these are not swollen. In FIG. **9**B, the same beam **101** and **103** have swollen, and the compressive elements **91**, **93**, **95**, and **97** have collapsed, as shown.

FIG. **10** shows a top view and FIG. **11** shows a side view of present invention device **120**. It includes a substantially flat top element **121**, that has a top view footprint of a circle, and two vertical support members **125** and **127**, that project downwardly on each side of beveled attachment orifice **129**. The sides of device **20**'s top **121** are vertical and basically are made up of a plurality of connected (continuous) arcs to form a circle. On the top side of device **120** are eight compressive elements **131**, **133**, **135**, **137**, **139**, **141**, **143**, **145**, and **147**. These are thin cylindrical protrusions that will collapse under compression, e.g. from expanding boards. As shown in FIG. **10**, they are further apart than the thickness of the vertical support members to create space between beams for expansion.

FIGS. **12** and **13** show top views of alternative embodiment present invention anchoring devices **161** and **190** respectively. In FIG. **12**, there is shown a top view of present invention anchor biscuit device **163** having a flat top surface as shown, and a top view shape of an elongated octagon biscuit. Thus, it includes wall segments **164**, **165**, and **166** on one side wall and wall segments **162**, **167**, and **163** on the opposite side. Segments **162**, for example, is non-parallel to segment **166**. There are flat ends **169** and **177**, as shown.

Top element **163** of device **161** in FIG. **12** also includes an attachment means, in this case, screw hole **173** located on center. Screw hole **173** has a bevel cut **175** at its top. This enables the user to nail or screw device **161** into a joist with the screw or nail being installed vertically, or, more preferably, at an angle.

Vertical support members **177** and **179** also include outwardly extending, angled tails **181**, **183**, **185**, and **187** and these are the collapsible compressive elements.

In FIG. **13**, there is shown a top view of present invention anchor biscuit device **190**, in the shape of an octagon biscuit. Device **190** includes a top element **198** having a flat top surface as shown, and a top view shape with eight equal segments; a first side with wall segments **193**, **197**, and **195**, and an opposite side with wall segments **207**, **209**, and **211**. In this case, they are perfectly symmetrical and have flat endwalls **199** and **201**. Top element **198** also includes an attachment means, screw hole **203** located on center. Note that screw hole **203** is elongated and has a beveled top **205**. Underside of top element **198** are two curved collapsible compressive elements **221** and **223**. These function similarly to those described above.

FIG. **14** shows a front view of present invention device **240**. Thus, device **240** includes a single vertical support member **245** with a space cut out **243** to permit a screw or nail to pass through beveled screw hole **253** and through vertical support member **245** into a joist or support board. There are two collapsible fins on each side of the vertical support member **245**, two shown as fins **249** and **251**. These are about 3/64 inch away from member **245** and act as collapsible compressive elements in a manner similar to those shown above. Vertical support member **245** has a predetermined height so as to rest on the side of a beam into which device **240** may be inserted and, optionally, so as to rest on a joist in such a way as to establish biscuit top element **247** at a predetermined height from the joist for attachment of two adjacent boards thereto which have pre-cut biscuit slots corresponding thereto. Side walls may be irregular or regular, and may have any top view, workable footprint similar to that shown in the segments that will fit into beam grooves or continuous straight grooves, e.g. biscuit cuts, half circle or arc cuts, square or rectangular cuts.

FIG. **15** shows a front view present invention of device **261**, which includes a single off-center vertical support member **265** with a space underneath beveled screw hole **263** to permit a screw or nail to pass through screw hole **263** into a beam and/or joist or support board. Top **267** has opposite ends **269** and **271** as shown, with support member **265** biased to the left toward end **269**, as shown. On the right underside of top **267** are two fins **281** and **283**, that have lengths (into the page, at right angle to vertical support member **265**), that is greater than the thickness of member **265**. They are collapsible and act as compressive elements with respect to adjourning boards. Top **263** has a topography with flat sides, such as side **273**, and is in the shape of a rectangle, e.g. a square.

FIG. **16** shows device **300** with top **301** having a generally barbell-shaped footprint. There is a first side having wall segments **303** and **305** that are arcs and are connected by flat segment **307**. The opposite wall includes arcs **309** and **311** and are separated by flat segment **313**. Wall segments **303** and **309** are opposite one another and are non-parallel. There is a beveled orifice **315** which is attaching device **300** in a manner described above as well as vertical segments **317** and **319** extending downwardly from top **301** on opposite sides of orifice **315**. There are two collapsible compressive element ovals **321** and **322** extending upwardly. These space beams further apart than would members **317** and **319**, in their absence, and thus accommodate wood expansion.

FIG. **17** shows a triangular shaped present invention anchoring device **400**. It has a top **401**, an orifice **409** for

attachment and a vertical support **411**. One wall has flat segments **403** and **405** and the opposite wall has a single flat segment **407**. There is a collapsible compressive element **415** on top to function in a manner similar to those previously described.

FIGS. **18**, **19** and **20** illustrate preferred embodiment present invention anchoring device **500**, in its top, side and end views respectively. Device **500** includes top **501** with beveled screw orifice **503** on center. Opposing sides **505** and **507** are arcuate and ends **509** and **511** are flat. Extending downwardly are vertical support members **513** and **515**, located on-center and on opposite sides of orifice **503**. The vertical support member **513** and **515** each have one thin walled tubular compressive element, shown as compressive elements **517** and **519**, respectively. Further, FIG. **21** shows top view of the same device as in FIGS. **18**, **19**, and **20**, except that the top is embossed or stamped. Here, device **500***a* includes top **501***a* with embossments such as word **531**, that can be production information, size, model number, installation instructions or other useful information. These are preferably indented and may be established in a forming mold for the device.

All of these devices may be installed in accordance with the descriptions for previous present invention devices described above. However, device **260** shown in FIG. **14** should have the arrowed wall inserted first so that the biased beveled orifice **296** is utilized maximally and receiving an attachment screw.

Obviously, numerous modifications and variations of the present invention are possible in light of the above teachings. It is therefore understood that within the scope of the appended claims, the invention may be practiced otherwise than as specifically described herein.

The invention claimed is:

1. An anchoring device comprising:

a horizontally-extending top element having a center line and side portions extending from the center line in opposite lateral directions transverse to the center line;

a support member extending downwardly from the top element adjacent the center line, the side portions of the top element projecting in the lateral directions beyond the support member; and

one or more at least partially collapsible compression members projecting from the top element, the compression members defining engagement surfaces remote from the center line, the engagement surfaces being constructed and arranged to confront vertically-extensive surfaces of slotted boards engaged with the top element so that the top element extends into slots in the boards;

the anchoring device having an opening adapted to receive a fastener so that the fastener extends downwardly toward a joist.

2. The anchoring device according to claim **1**, wherein the horizontally-extending top element has a shape selected from the group consisting of square, rectangular, circular, and oval.

3. The anchoring device according to claim **1**, wherein the opening extends through the horizontally top element.

4. The anchoring device according to claim **1**, wherein the opening is located adjacent the center line of the horizontally-extending top element.

5. The anchoring device according to claim **1**, wherein the one or more compression members are attached to the support members.

6. The anchoring device according to claim **1**, wherein the one or more compression members includes one or more hollow cylinders.

7. The anchoring device according to claim **1**, wherein the one or more compression members include one or more fins projecting from the top element.

8. The anchoring device according to claim **1**, wherein the support member includes at least two planar structures spaced from each other, the at least two planar structures being positioned substantially along a single plane.

9. The anchoring device according to claim **1**, wherein the support member is a monolithic structure.

10. The anchoring device according to claim **1**, wherein the opening has an elongated shape.

11. An decking system comprising:

at least two slotted boards adjacent to each other, each slotted board including a slot and at least one vertically-extensive surface and at least one horizontally-extensive surface; and

an anchoring device having an opening adapted to receive a fastener so that the fastener extends downwardly toward a joist, the anchoring device comprising:

a horizontally-extending top element having a center line and side portions extending from the center line in opposite lateral directions transverse to the center line;

a support member extending downwardly from the top element adjacent the center line, the side portions of the top element projecting in the lateral directions beyond the support member; and

one or more at least partially collapsible compression members projecting from the top element, the compression members defining engagement surfaces remote from the center line, the engagement surfaces being constructed and arranged to confront the at least one vertically extensive surface of each slotted board engaged with the top element so that the top element extends into the slots in the boards.

12. The decking system according to claim **11**, wherein the horizontally-extending top element has a shape selected from the group consisting of square, rectangular, circular, and oval.

13. The decking system according to claim **11**, wherein the opening extends through the horizontally top element.

14. The decking system according to claim **11**, wherein the opening is located adjacent the center line of the horizontally-extending top element.

15. The decking system according to claim **11**, wherein the one or more compression members are attached to the support members.

16. The decking system according to claim **11**, wherein the one or more compression members includes one or more hollow cylinders.

17. The decking system according to claim **11**, wherein the one or more compression members include one or more fins projecting from the top element.

18. The decking system according to claim **11**, wherein the support member includes at least two planar structures spaced from each other, the at least two planar structures being positioned substantially along a single plane.

19. The decking system according to claim **11**, wherein the support member is a monolithic structure.

20. The decking system according to claim **11**, wherein the opening has an elongated shape.

21. An anchoring device comprising:

a horizontally-extending top element having a center line, side portions extending from the center line in opposite lateral directions transverse to the center line, opposite sidewalls and opposite end walls, the center line extending between the opposite end walls, at least a portion of

one of the end walls being non-parallel relative to a corresponding portion of the other end wall directly opposite thereto;

a support member extending downwardly from the top element adjacent the center line, the side portions of the top element projecting in the lateral directions beyond the support member, the support member being constructed and arranged to be positioned between vertically-extensive surfaces of slotted boards engaged with the top element so that the top element extends into slots in the boards; and

the anchoring device having an opening adapted to receive a fastener so that the fastener extends downwardly toward a joist.

22. The anchoring device according to claim **21**, wherein at least one of the opposite end walls has an arc-shape.

23. The anchoring device according to claim **21**, further comprising one or more compression members projecting from the horizontally-extending top element.

24. The anchoring device according to claim **23**, wherein the one or more compression members have an oval cross-section.

25. The anchoring device according to claim **21**, wherein the opening has a beveled top.

* * * * *