UNITED STATES PATENT AND TRADEMARK OFFICE
UNDER SECRETARY OF COMMERCE FOR
INTELLECTUAL PROPERTY AND
DIRECTOR OF THE UNITED STATES PATENT
AND TRADEMARK OFFICE
Alexandria, Virginia 22313

Patent No. 6328260 Paper No. 13

NOTICE OF *INTER PARTES* REEXAMINATION

Notice is hereby given that a request for *inter partes* reexamination of U.S. Patent No. 6328260 was filed on 07-15-02 under 35 U.S.C. 311(a) and 37 CFR 1.913.

The reexamination proceeding has been assigned Control No. 95/000,005.

This Notice incorporates by reference into the patent file, all papers entered into the reexamination file.

Note: This Notice should be entered into the patent file and given a paper number.

PART B - ISSUE FEE TRANSMITTAL

Complete and mail this form, together with applicable fees, to: Box ISSUE FEE
Assistant Commissioner for Patents
Washington, D.C. 20231

MAILING INSTRUCTIONS: This form should be used for transmitting the ISSUE FEE. Blocks 1 through 4 should be completed where appropriate. All further correspondence including the Issue Fee Receipt, the Patent, advance orders and notification of maintenance fees will be mailed to the current correspondence address as indicated unless corrected below or directed otherwise in Block 1, by (a) specifying a new correspondence address; and/or (b) indicating a separate "FEE ADDRESS" for maintenance fee notifications.

CURRENT CORRESPONDENCE ADDRESS (Note: Legibly mark-up with any corrections or use Block 1)

024124 PM82/0911
THOMAS L. BOHAN & ASSOCIATES
371 FORE STREET
SUITE 202
PORTLAND ME 04101

Note: The certificate of mailing below can only be used for domestic mailings of the Issue Fee Transmittal. This certificate cannot be used for any other accompanying papers. Each additional paper, such as an assignment or formal drawing, must have its own certificate of mailing.

Certificate of Mailing

I hereby certify that this Issue Fee Transmittal is being deposited with the United States Postal Service with sufficient postage for first class mail in an envelope addressed to the Box Issue Fee address above on the date indicated below.

RECEIVED
SEP 17 2001

Jennifer Corlett (Depositor's name)
(Signature)
THOMAS L. BOHAN 09/05/01 (Date)

APPLICATION NO.	FILING DATE	TOTAL CLAIMS	EXAMINER AND GROUP ART UNIT	DATE MAILED
09/696,127	10/25/00	014	ELDRED, J 3644	09/11/01

First Named Applicant: TARDOX, 35 USC 154(b) term ext. = 0 Days.

TITLE OF INVENTION: WING SPAR MODIFICATION KIT

ATTY'S DOCKET NO.	CLASS-SUBCLASS	BATCH NO.	APPLN. TYPE	SMALL ENTITY	FEE DUE	DATE DUE
2 00 124	244-131.000	Z99	UTILITY	YES	$620.00	12/11/01

1. Change of correspondence address or indication of " Fee Address" (37 CFR 1.363). Use of PTO form(s) and Customer Number are recommended, but not required.
☐ Change of correspondence address (or Change of Correspondence Address form PTO/SB/122) attached.
☐ "Fee Address" indication (or "Fee Address" indication form PTO/SB/47) attached.

2. For printing on the patent front page, list (1) the names of up to 3 registered patent attorneys or agents OR, alternatively, (2) the name of a single firm (having as a member a registered attorney or agent) and the names of up to 2 registered patent attorneys or agents. If no name is listed, no name will be printed.
1 Thomas L. Bohan
2 Patricia M. Mathers
3

3. ASSIGNEE NAME AND RESIDENCE DATA TO BE PRINTED ON THE PATENT (print or type)
PLEASE NOTE: Unless an assignee is identified below, no assignee data will appear on the patent. Inclusion of assignee data is only appropriate when an assignment has been previously submitted to the PTO or is being submitted under separate cover. Completion of this form is NOT a substitute for filing an assignment.
(A) NAME OF ASSIGNEE
(B) RESIDENCE: (CITY & STATE OR COUNTRY)
Please check the appropriate assignee category indicated below (will not be printed on the patent)
☐ Individual ☐ corporation or other private group entity ☐ government

4a. The following fees are enclosed (make check payable to Commissioner of Patents and Trademarks):
☒ Issue Fee
☐ Advance Order - # of Copies 10

4b. The following fees or deficiency in these fees should be charged to:
DEPOSIT ACCOUNT NUMBER 501517
(ENCLOSE AN EXTRA COPY OF THIS FORM)
☒ Issue Fee
☒ Advance Order - # of Copies 10

The COMMISSIONER OF PATENTS AND TRADEMARKS IS requested to apply the Issue Fee to the application identified above.

(Authorized Signature) Patricia M. Mathers (Date) 10/10/01

NOTE; The Issue Fee will not be accepted from anyone other than the applicant; a registered attorney or agent; or the assignee or other party in interest as shown by the records of the Patent and Trademark Office.

10/17/2001 HDEMBER 00000096 501517 09696127
01 FC:241 640.00 OP
02 FC:1561 20.00 CH 10.00 OP

Burden Hour Statement: This form is estimated to take 0.2 hours to complete. Time will vary depending on the needs of the individual case. Any comments on the amount of time required to complete this form should be sent to the Chief Information Officer, Patent and Trademark Office, Washington, D.C. 20231. DO NOT SEND FEES OR COMPLETED FORMS TO THIS ADDRESS. SEND FEES AND THIS FORM TO: Box Issue Fee, Assistant Commissioner for Patents, Washington D.C. 20231

Under the Paperwork Reduction Act of 1995, no persons are required to respond to a collection of information unless it displays a valid OMB control number.

TRANSMIT THIS FORM WITH FEE

PTOL-85B (REV.10-98) Approved for use through 09/30/99. OMB 0651-0033 Patent and Trademark Office; U.S. DEPARTMENT OF COMMERCE

Patent and Trademark Office
Address: COMMISSIONER OF PATENTS AND TRADEMARKS
Washington, D.C. 20231

APPLICATION NUMBER	FILING DATE	FIRST NAMED APPLICANT	ATTORNEY DOCKET NO.
09/696,127	10/25/00	TARBOX	J 00-124

EXAMINER

024124 PM51/0920
THOMAS L. BOHAN & ASSOCIATES
371 FORE STREET
SUITE 202
PORTLAND ME 04101

ART UNIT	PAPER NUMBER
3644	12

DATE MAILED: 09/20/01

This is a communication from the examiner in charge of your application.
COMMISSIONER OF PATENTS AND TRADEMARKS

Supplemental

NOTICE OF ALLOWABILITY

All claims being allowable, PROSECUTION ON THE MERITS IS (OR REMAINS) CLOSED in this application. If not included herewith (or previously mailed), a Notice of Allowance and Issue Fee Due or other appropriate communication will be mailed in due course.

☐ This communication is responsive to _____.

☐ The allowed claim(s) is/are _____.

☐ The drawings filed on _____ are acceptable.

☐ Acknowledgement is made of a claim for foreign priority under 35 U.S.C. § 119(a)-(d).

☐ All ☐ Some* ☐ None of the CERTIFIED copies of the priority documents have been

☐ received.

☐ received in Application No. (Series Code/Serial Number) _____.

☐ received in this national stage application from the International Bureau (PCT Rule 17.2(a)).

*Certified copies not received: _____.

☐ Acknowledgement is made of a claim for domestic priority under 35 U.S.C. § 119(e).

A SHORTENED STATUTORY PERIOD FOR REPLY to comply with the requirements noted below is set to EXPIRE **THREE MONTHS** FROM THE "DATE MAILED" of this Office action. Failure to timely comply will result in ABANDONMENT of this application. Extensions of time may be obtained under the provisions of 37 CFR 1.136(a).

☐ Note the attached EXAMINER'S AMENDMENT or NOTICE OF INFORMAL APPLICATION, PTO-152, which discloses that the oath or declaration is deficient. A SUBSTITUTE OATH OR DECLARATION IS REQUIRED.

☐ Applicant MUST submit NEW FORMAL DRAWINGS

☐ because the originally filed drawings were declared by applicant to be informal.

☐ including changes required by the Notice of Draftperson's Patent Drawing Review, PTO-948, attached hereto or to Paper No. ____.

☐ including changes required by the proposed drawing correction filed on _____, which has been approved by the examiner.

☐ including changes required by the attached Examiner's Amendment/Comment.

Identifying indicia such as the application number (see 37 CFR 1.84(c)) should be written on the reverse side of the drawings. The drawings should be filed as a separate paper with a transmittal letter addressed to the Official Draftperson.

☐ Note the attached Examiner's comment regarding REQUIREMENT FOR THE DEPOSIT OF BIOLOGICAL MATERIAL.

Any reply to this notice should include, in the upper right hand corner, the APPLICATION NUMBER (SERIES CODE/SERIAL NUMBER). If applicant has received a Notice of Allowance and Issue Fee Due, the ISSUE BATCH NUMBER and DATE of the NOTICE OF ALLOWANCE should also be included.

Attachment(s)

☐ Notice of References Cited, PTO-892

☒ Information Disclosure Statement(s), PTO-1449, Paper No(s). 9

☐ Notice of Draftsperson's Patent Drawing Review, PTO-948

☐ Notice of Informal Patent Application, PTO-152

☐ Interview Summary, PTO-413

☐ Examiner's Amendment/Comment

☐ Examiner's Comment Regarding Requirement for Deposit of Biological Material

☐ Examiner's Statement of Reasons for Allowance

J. Woodrow Eldred

J. WOODROW ELDRED
PRIMARY EXAMINER
GROUP 3600

PTOL-37 (Rev. 8/97)

*U.S. GPO: 1998-433-221/82108

UNITED STATES PATENT AND TRADEMARK OFFICE

UNITED STATES DEPARTMENT OF COMMERCE
United States Patent and Trademark Office
Address: COMMISSIONER OF PATENTS AND TRADEMARKS
Washington D.C. 20231
www.uspto.gov

NOTICE OF ALLOWANCE AND FEE(S) DUE

24124 7590 09/13/2001

THOMAS L. BOHAN & ASSOCIATES
371 FORE STREET
SUITE 202
PORTLAND, ME 04101

EXAMINER	
ELDRED, JOHN W	
ART UNIT	**CLASS-SUBCLASS**
3644	244-131000

DATE MAILED: 09/13/2001

APPLICATION NO.	FILING DATE	FIRST NAMED INVENTOR	ATTORNEY DOCKET NO.	CONFIRMATION NO.
09/696,127	10/25/2000	Jack M. Tarbox	00-124	3541

TITLE OF INVENTION: Wing spar modification kit

OK to Enter

TOTAL CLAIMS	APPLN. TYPE	SMALL ENTITY	ISSUE FEE	PUBLICATION FEE	TOTAL FEE(S) DUE	DATE DUE
14	nonprovisional	YES	$620	$0	$620	12/13/2001

THE APPLICATION IDENTIFIED ABOVE HAS BEEN EXAMINED AND IS ALLOWED FOR ISSUANCE AS A PATENT.

PROSECUTION ON THE MERITS IS CLOSED. THIS NOTICE OF ALLOWANCE IS NOT A GRANT OF PATENT RIGHTS. THIS APPLICATION IS SUBJECT TO WITHDRAWAL FROM ISSUE AT THE INITIATIVE OF THE OFFICE OR UPON PETITION BY THE APPLICANT. SEE 37 CFR 1.313 AND MPEP 1308.

THE ISSUE FEE AND PUBLICATION FEE (IF REQUIRED) MUST BE PAID WITHIN THREE MONTHS FROM THE MAILING DATE OF THIS NOTICE OR THIS APPLICATION SHALL BE REGARDED AS ABANDONED. THIS STATUTORY PERIOD CANNOT BE EXTENDED. SEE 35 U.S.C. 151.

HOW TO REPLY TO THIS NOTICE:

I. Review the SMALL ENTITY status shown above. If the SMALL ENTITY is shown as YES, verify your current SMALL ENTITY status:

A. If the status is changed, pay the PUBLICATION FEE (if required) and twice the amount of the ISSUE FEE shown above and notify the United States Patent and Trademark Office of the change in status, or

B. If the status is the same, pay the TOTAL FEE(S) DUE shown above.

If the SMALL ENTITY is shown as NO:

A. Pay TOTAL FEE(S) DUE shown above, or

B. If applicant claimed SMALL ENTITY status before, or is now claiming SMALL ENTITY status, check the box below and enclose the PUBLICATION FEE and 1/2 the ISSUE FEE shown above.

☐ Applicant claims SMALL ENTITY status. See 37 CFR 1.27.

II. PART B - FEE(S) TRANSMITTAL should be completed and returned to the United States Patent and Trademark Office (USPTO) with your ISSUE FEE and PUBLICATION FEE (if required). Even if the fee(s) have already been paid, Part B - Fee(s) Transmittal should be completed and returned. If you are charging the fee(s) to your deposit account, section "4b" of Part B - Fee(s) Transmittal should be completed and an extra copy of the form should be submitted.

III. All communications regarding this application must give the application number. Please direct all communications prior to issuance to Box ISSUE FEE unless advised to the contrary.

IMPORTANT REMINDER: Utility patents issuing on applications filed on or after Dec. 12, 1980 may require payment of maintenance fees. It is patentee's responsibility to ensure timely payment of maintenance fees when due.

PART B - FEE(S) TRANSMITTAL

Complete and mail this form, together with applicable fee(s), to:

Box ISSUE FEE
Assistant Commissioner for Patents
Washington, D.C. 20231

MAILING INSTRUCTIONS: This form should be used for transmitting the ISSUE FEE and PUBLICATION FEE (if required). Blocks 1 through 4 should be completed where appropriate. All further correspondence including the Patent, advance orders and notification of maintenance fees will be mailed to the current correspondence address as indicated unless corrected below or directed otherwise in Block 1, by (a) specifying a new correspondence address; and/or (b) indicating a separate "FEE ADDRESS" for maintenance fee notifications.

CURRENT CORRESPONDENCE ADDRESS (Note: Legibly mark-up with any corrections or use Block 1)

24124 7590 09/13/2001

THOMAS L. BOHAN & ASSOCIATES
371 FORE STREET
SUITE 202
PORTLAND, ME 04101

Note: The certificate of mailing below can only be used for domestic mailings of the Fee(s) Transmittal. This certificate cannot be used for any other accompanying papers. Each additional paper, such as an assignment or formal drawing, must have its own certificate of mailing.

Certificate of Mailing

I hereby certify that this Fee(s) Transmittal is being deposited with the United States Postal Service with sufficient postage for first class mail in an envelope addressed to the Box Issue Fee address above on the date indicated below.

(Depositor's name)
(Signature)
(Date)

APPLICATION NO.	FILING DATE	FIRST NAMED INVENTOR	ATTORNEY DOCKET NO.	CONFIRMATION NO.
09/696,127	10/25/2000	Jack M. Tarbox	00-124	3541

TITLE OF INVENTION: Wing spar modification kit

TOTAL CLAIMS	APPLN. TYPE	SMALL ENTITY	ISSUE FEE	PUBLICATION FEE	TOTAL FEE(S) DUE	DATE DUE
14	nonprovisional	YES	$620	$0	$620	12/13/2001

EXAMINER	ART UNIT	CLASS-SUBCLASS
ELDRED, JOHN W	3644	244-131000

1. Change of correspondence address or indication of "Fee Address" (37 CFR 1.363). Use of PTO form(s) and Customer Number are recommended, but not required.

❑ Change of correspondence address (or Change of Correspondence Address form PTO/SB/122) attached.

❑ "Fee Address" indication (or "Fee Address" Indication form PTO/SB/47) attached.

2. For printing on the patent front page, list (1) the names of up to 3 registered patent attorneys or agents OR, alternatively, (2) the name of a single firm (having as a member a registered attorney or agent) and the names of up to 2 registered patent attorneys or agents. If no name is listed, no name will be printed.

1 _____

2 _____

3 _____

3. ASSIGNEE NAME AND RESIDENCE DATA TO BE PRINTED ON THE PATENT (print or type)

PLEASE NOTE: Unless an assignee is identified below, no assignee data will appear on the patent. Inclusion of assignee data is only appropriate when an assignment has been previously submitted to the USPTO or is being submitted under separate cover. Completion of this form is NOT a substitute for filing an assignment.

(A) NAME OF ASSIGNEE (B) RESIDENCE: (CITY and STATE OR COUNTRY)

Please check the appropriate assignee category or categories (will not be printed on the patent) ❑ individual ❑ corporation or other private group entity ❑ government

4a. The following fee(s) are enclosed:

❑ Issue Fee

❑ Publication Fee

❑ Advance Order - # of Copies _____

4b. Payment of Fee(s):

❑ A check in the amount of the fee(s) is enclosed.

❑ Payment by credit card. Form PTO-2038 is attached.

❑ The Commissioner is hereby authorized by charge the required fee(s), or credit any overpayment, to Deposit Account Number _____(enclose an extra copy of this form).

The COMMISSIONER OF PATENTS AND TRADEMARKS is requested to apply the Issue Fee and Publication Fee (if any) to the application identified above.

(Authorized Signature) (Date)

NOTE: The Issue Fee and Publication Fee (if required) will not be accepted from anyone other than the applicant; a registered attorney or agent; or the assignee or other party in interest as shown by the records of the United States Patent and Trademark Office.

Burden Hour Statement: This form is estimated to take 0.2 hours to complete. Time will vary depending on the needs of the individual case. Any comments on the amount of time required to complete this form should be sent to the Chief Information Officer, United States Patent and Trademark Office, Washington, D.C. 20231. DO NOT SEND FEES OR COMPLETED FORMS TO THIS ADDRESS. SEND FEES AND THIS FORM TO: Box Issue Fee, Assistant Commissioner for Patents, Washington, D.C. 20231

Under the Paperwork Reduction Act of 1995, no persons are required to respond to a collection of information unless it displays a valid OMB control number.

TRANSMIT THIS FORM WITH FEE(S)



UNITED STATES PATENT AND TRADEMARK OFFICE

UNITED STATES DEPARTMENT OF COMMERCE
United States Patent and Trademark Office
Address: COMMISSIONER OF PATENTS AND TRADEMARKS
Washington, D.C. 20231
www.uspto.gov

APPLICATION NO.	FILING DATE	FIRST NAMED INVENTOR	ATTORNEY DOCKET NO.	CONFIRMATION NO.
09/696,127	10/25/2000	Jack M. Tarbox	00-124	3541

24124 7590 09/13/2001

THOMAS L. BOHAN & ASSOCIATES
371 FORE STREET
SUITE 202
PORTLAND, ME 04101

EXAMINER	
ELDRED, JOHN W	
ART UNIT	**PAPER NUMBER**
3644	

DATE MAILED: 09/13/2001

Determination of Patent Term Adjustment under 35 U.S.C. 154 (b)
(application filed on or after May 29, 2000)

The patent term adjustment to date is 1 days. If the issue fee is paid on the date that is three months after the mailing date of this notice and the patent issues on the Tuesday before the date that is 28 weeks (six and a half months) after the mailing date of this notice, the term adjustment will be 1 days.

If a continued prosecution application (CPA) was filed in the above-identified application, the filing date that determines patent term adjustment is the filing date of the most recent CPA.

Applicant will be able to obtain more detailed information by accessing the Patent Application Information Retrieval (PAIR) system. (http://pair.uspto.gov)

PTOL-85 (REV. 07-01) Approved for use through 01/31/2004.

Notice of Allowability	Application No. 09/696,127	Applicant(s) TARBOX ET AL.	
	Examiner J. Woodrow Eldred	Art Unit 3644	

-- The MAILING DATE of this communication appears on the cover sheet with the correspondence address--

All claims being allowable, PROSECUTION ON THE MERITS IS (OR REMAINS) CLOSED in this application. If not included herewith (or previously mailed), a Notice of Allowance (PTOL-85) or other appropriate communication will be mailed in due course. **THIS NOTICE OF ALLOWABILITY IS NOT A GRANT OF PATENT RIGHTS.** This application is subject to withdrawal from issue at the initiative of the Office or upon petition by the applicant. See 37 CFR 1.313 and MPEP 1308.

1. ☒ This communication is responsive to *amendment filed 5-10-01*.
2. ☒ The allowed claim(s) is/are *1-14*.
3. ☒ The drawings filed on *25 October 2000* are accepted by the Examiner.
4. ☐ Acknowledgment is made of a claim for foreign priority under 35 U.S.C. § 119(a)-(d) or (f).
   a) ☐ All b) ☐ Some* c) ☐ None of the:
      1. ☐ Certified copies of the priority documents have been received.
      2. ☐ Certified copies of the priority documents have been received in Application No. _____ .
      3. ☐ Copies of the certified copies of the priority documents have been received in this national stage application from the International Bureau (PCT Rule 17.2(a)).

   * Certified copies not received: _____.
5. ☐ Acknowledgment is made of a claim for domestic priority under 35 U.S.C. § 119(e) (to a provisional application).
   (a) ☐ The translation of the foreign language provisional application has been received.
6. ☐ Acknowledgment is made of a claim for domestic priority under 35 U.S.C. §§ 120 and/or 121.

Applicant has THREE MONTHS FROM THE "MAILING DATE" of this communication to file a reply complying with the requirements noted below. Failure to timely comply will result in ABANDONMENT of this application. **THIS THREE-MONTH PERIOD IS NOT EXTENDABLE.**

7. ☐ A SUBSTITUTE OATH OR DECLARATION must be submitted. Note the attached EXAMINER'S AMENDMENT or NOTICE OF INFORMAL PATENT APPLICATION (PTO-152) which gives reason(s) why the oath or declaration is deficient.

8. ☐ CORRECTED DRAWINGS must be submitted.
   (a) ☐ including changes required by the Notice of Draftsperson's Patent Drawing Review (PTO-948) attached
      1) ☐ hereto or 2) ☐ to Paper No. ____.
   (b) ☐ including changes required by the proposed drawing correction filed _____, which has been approved by the Examiner.
   (c) ☐ including changes required by the attached Examiner's Amendment / Comment or in the Office action of Paper No. _____.

Identifying indicia such as the application number (see 37 CFR 1.84(c)) should be written on the drawings in the top margin (not the back) of each sheet. The drawings should be filed as a separate paper with a transmittal letter addressed to the Official Draftsperson.

9. ☐ DEPOSIT OF and/or INFORMATION about the deposit of BIOLOGICAL MATERIAL must be submitted. Note the attached Examiner's comment regarding REQUIREMENT FOR THE DEPOSIT OF BIOLOGICAL MATERIAL.

Attachment(s)

1☐ Notice of References Cited (PTO-892)
2☐ Notice of Informal Patent Application (PTO-152)
3☐ Notice of Draftperson's Patent Drawing Review (PTO-948)
4☐ Interview Summary (PTO-413), Paper No.____ .
5☐ Information Disclosure Statements (PTO-1449), Paper No. ____.
6☒ Examiner's Amendment/Comment
7☐ Examiner's Comment Regarding Requirement for Deposit of Biological Material
8☐ Examiner's Statement of Reasons for Allowance
9☐ Other .

Amend B

1. An examiner's amendment to the record appears below. Should the changes and/or additions be unacceptable to applicant, an amendment may be filed as provided by 37 CFR 1.312. To ensure consideration of such an amendment, it MUST be submitted no later than the payment of the issue fee.

Authorization for this examiner's amendment was given in a telephone interview with Patricia M. Mathers on 8-7-01.

The application has been amended as follows:

B

Delete claims 15 and 16.

2. Any inquiry concerning this communication or earlier communications from the examiner should be directed to J. Woodrow Eldred whose telephone number is 703-306-4151. The examiner can normally be reached on Monday to Thursday, from 8:00 a.m. to 5:30 p.m.

If attempts to reach the examiner by telephone are unsuccessful, the examiner's supervisor, Charles Jordan can be reached on 703-306-4159. The fax phone numbers for the organization where this application or proceeding is assigned are 703-305-7687 for regular communications and 703-305-7687 for After Final communications.

Any inquiry of a general nature or relating to the status of this application or proceeding should be directed to the receptionist whose telephone number is 703-306-4177.

J. Woodrow Eldred

J. Woodrow Eldred
Primary Examiner
Art Unit 3644

UNITED STATES DEPARTMENT OF COMMERCE
Patent and Trademark Office

NOTICE OF ALLOWANCE AND ISSUE FEE DUE

PM82/0911

024124
THOMAS L. BOHAN & ASSOCIATES
371 FORE STREET
SUITE 202
PORTLAND ME 04101

APPLICATION NO.	FILING DATE	TOTAL CLAIMS	EXAMINER AND GROUP ART UNIT		DATE MAILED
09/696,127	10/25/00	014	ELDRED, J	3644	09/11/01

First Named Applicant: TARBOX,

35 USC 154(b) term ext. = 0 Days.

TITLE OF INVENTION: WING SPAR MODIFICATION KIT

ATTY'S DOCKET NO.	CLASS-SUBCLASS	BATCH NO.	APPLN. TYPE	SMALL ENTITY	FEE DUE	DATE DUE
2 00-124	244-131.000	Z93	UTILITY	YES	$620.00	12/11/01

THE APPLICATION IDENTIFIED ABOVE HAS BEEN EXAMINED AND IS ALLOWED FOR ISSUANCE AS A PATENT. PROSECUTION ON THE MERITS IS CLOSED.

THE ISSUE FEE MUST BE PAID WITHIN THREE MONTHS FROM THE MAILING DATE OF THIS NOTICE OR THIS APPLICATION SHALL BE REGARDED AS ABANDONED. THIS STATUTORY PERIOD CANNOT BE EXTENDED.

HOW TO RESPOND TO THIS NOTICE:

I. Review the SMALL ENTITY status shown above.
If the SMALL ENTITY is shown as YES, verify your current SMALL ENTITY status:

A. If the status is changed, pay twice the amount of the FEE DUE shown above and notify the Patent and Trademark Office of the change in status, or
B. If the status is the same, pay the FEE DUE shown above.

If the SMALL ENTITY is shown as NO:

A. Pay FEE DUE shown above, or

B. File verified statement of Small Entity Status before, or with, payment of 1/2 the FEE DUE shown above.

II. Part B-Issue Fee Transmittal should be completed and returned to the Patent and Trademark Office (PTO) with your ISSUE FEE. Even if the ISSUE FEE has already been paid by charge to deposit account, Part B Issue Fee Transmittal should be completed and returned. If you are charging the ISSUE FEE to your deposit account, section "4b" of Part B-Issue Fee Transmittal should be completed and an extra copy of the form should be submitted.

III. All communications regarding this application must give application number and batch number.
Please direct all communications prior to issuance to Box ISSUE FEE unless advised to the contrary.

IMPORTANT REMINDER: Utility patents issuing on applications filed on or after Dec. 12, 1980 may require payment of maintenance fees. It is patentee's responsibility to ensure timely payment of maintenance fees when due.

PTOL-85 (REV. 10-95) Approved for use through 06/30/99. (0651-0033)

OIPE JC148 MAY 10 2001 PATENT & TRADEMARK OFFICE

IN THE UNITED STATES PATENT AND TRADEMARK OFFICE

RECEIVED MAY 16 2001 TC 3600 MAIL ROOM

Application No.:	09/696,127
Filing Date:	October 25, 2000
Applicants:	Jack M. TARBOX and Philip J. BAKER
Title:	WING SPAR MODIFICATION KIT
Group Art Unit:	3644
Examiner:	J. Woodrow ELDRED
Attorney No.:	00-124

To: Assistant Commissioner for Patents
Washington, D.C. 20231

Request for Reconsideration Pursuant to 37 C.F.R. § 1.111

Dear sir:

Please amend the above-cited application as follows:

In the Specification:

Please amend the paragraph on pages 4 and 5 beginning "A filler-strap may be made of ..." as follows:

A filler-strap may be made of a material different from that of the doubler, for reasons of cost-effectiveness or for structural reasons. In the present invention, the web spar web is made of aluminum, so the filler-strap is also made of aluminum, to eliminate the danger of corrosion on the web spar resulting from contact between dissimilar metals. The doubler-strap, is made of steel for structural reasons. Direct contact between the aluminum filler-strap and the steel doubler-strap, however,

introduces the risk of corrosion on these two parts, thereby exacerbating concerns of prolonged structural integrity. To counter this problem, the doubler-strap is coated with a protective coating that is a heat-cured ceramic powder coating, either Midrofin Allseal or preferably SermeTel ® 5380DP, and the filler-straps are coated with an alodine conversion coating and then a primer coat. This effectively eliminates direct contact between the dissimilar metals, and, furthermore, decreases the risk of corrosion arising from salt water environments. Furthermore, the aluminum filler-strap, which is more easily replaceable than the doubler-strap, will corrode before the doubler-strap.

In the Claims:

Please amend **Claim 1** as follows:

1. A modification kit for retrofitting a wing spar on an amphibious airplane, said airplane having a root rib, and said wing spar comprising a wing-spar cap angle that is attached to a wing spar web, said wing spar web having an upper edge and a lower edge and an inboard end that attaches to said root rib, a first series of wing-attach bolt-holes that is provided in said upper edge and a second series of wing-attach bolt-holes that is provided in said lower edge of said wing spar web, wherein said root rib is angled relative to a vertical plane of said amphibious airplanes, and wherein said inboard end of said wing spar has an inboard-end angle that corresponds to an angle of said root rib, said modification kit comprising:

an upper doubler-strap and an upper filler-strap;

a lower doubler-strap and a lower filler-strap; and

a plurality of wing-spar attachment-bolts;

wherein each said upper filler-strap and each said upper doubler-strap have a third series of wing-attach bolt-holes that corresponds precisely with a first series of wing-attach bolt-holes in an upper edge of a wing spar web, and said lower filler-

strap and said lower doubler-strap have a fourth series of wing-attach bolt-holes that corresponds precisely with a second series of wing-attach bolt-holes in a lower edge of said wing spar;

wherein said upper and said lower doubler-straps have a doubler-protective-coating and said upper and said lower filler-straps have a filler-protective-coating, and

wherein said upper doubler-strap has an upper inboard-end angle and said lower doubler-strap has a lower inboard end angle.

7. The kit of **Claim 1**, wherein said doubler-protective coating is a powder coating that is heat-cured to form a ceramic coating.

Remarks:

1. Applicants thank the Examiner for his careful review of the present application, as evidenced by the Office Action mailed April, 26, 2001.

2. On page 1 of the Office Action, Examiner rejected **Claims 1 - 14** under 35 U.S.C. § 112, 2nd paragraph. Specifically, Examiner deemed **Claims 1** and **7** vague and indefinite because of use of a trademark, and **Claim 14** because of use of designations that are subject to change. **Claim 1** has now been amended to read "all models of Lake amphibious airplanes, each airplane of said models ..." instead of "a Lake model amphibious airplane." The invention of the present application applies specifically to Lake model amphibious aircraft and Applicants submit that adding "all" to the claim eliminates vagueness. Language supporting this amendment can be found in the Specification on page 1, lines 5 and 6 and particularly on page 5, lines 5 - 9, where reference is made to all Lake model aircraft.

3. With regard to **Claim 7**, Applicants have amended **Claim 7** and the Specification on page 9 to include generic language as suggested by Examiner, describing the protective coating. Reference to the SERMETEL ® coating was included in the original specification and the introduction of the generic language describing both the SERMETEL the MIDROFIN ALLSEAL as heat-cured, ceramic coatings does not introduce new matter, since this language describes the coatings mentioned in the application at the time of filing. In addition, new **Claims 15** and **16** were added, reciting the specific ceramic coatings that are mentioned in the Specification on page 9. Applicants submit that no new matter was introduced with these amendments and requests that Examiner withdraw his rejection of **Claim 7** and allow **Claims 7, 15,** and **16**.

4. With regard to **Claim 14,** Applicants respectfully submit that NAS fasteners are made according to national standards that cannot be changed by the manufacturer.

The term "NAS" designates the production of a part according to an established National Aerospace Standard specification which defines the design, manufacturing, test and acceptance criteria for components used in the aerospace industry. The NAS standards are governed by a committee of representatives from the industry, are widely accepted by private and public oversight boards, and cannot be changed by any particular manufacturer. Most importantly, the standard designations of the fasteners are used industry-wide, both by private and public agencies and organizations, to identify fasteners made to the particular standard. A print-out from an Federal Aviation Administration website (URL: *http://www.faa.gov/avr/standard.htm)* explaining "standard parts" and supporting Applicants use of the NAS designation as proper is attached. as Exhibit "A" Thus, Applicants submit that the designation of components as "NAS" parts is not vague and indefinite. Accordingly, Applicants request that Examiner withdraw his rejections under 35 U.S.C. § 112 2nd paragraph of **Claims 1 - 14** and allow **Claims 1 - 14** and new **Claims 15** and **16**.

5. A Supplemental Information Disclosure Statement is included with this Response. Referenced on the IDS is a Service Bulletin B-79, sent by REVO, Inc. in June of 1999 to the Federal Aviation Administration and a Notice of Proposed Rulemaking published in the *Federal Register* on October 6, 1999. The purpose of the Service Bulletin B-79 was to recommend corrective action with regard to cracks appearing on the wind spar of Lake model amphibious aircraft. Reference to the Service Bulletin B-79 was made in the Notice of Proposed Rulemaking. At the time of this publication, no modification kits had been made, sold, or offered for sale. The particularly relevant features of the kit, namely the inboard-end angle and the anti-corrosion coating on the doubler strap were not disclosed in this Bulletin and had, in fact, not yet been developed. Applicants request Examiner's consideration of the two references submitted herewith.

6. This Response is timely filed within the three-month shortened statutory period and no additional fees are required. Nevertheless, the undersigned gives herewith authorization to charge any additional fees required under 37 C.F.R. § 1.16 and 1.17 to the Deposit Account of Thomas L. Bohan & Associates, No. 501 517.

Respectfully submitted,

May 10, 2001

Patricia M. Mathers
Attorney for Applicants
Reg. No. 44,906
371 Fore Street
Portland, ME 04101
(207) 773-3132

Enclosed:

Express Mailed on: 05/10/2001
Mailing Label No.: EL291413234US

PMM
Docket No: 00-124
May 9, 2001 (3:43PM)

OIPE JC08 MAY 10 2001 PATENT & TRADEMARK OFFICE

Marked-up copy of amended Specification and Claims:

In the Specification:

Page 4, line 28: After "protective coating" and before ",", insert --that is a heat-cured ceramic powder coating--.

In the Claims:

1. A modification kit for retrofitting a wing spar on **[a]** all models of Lake amphibious airplanes, **[said]** each airplane of said models having a root rib, and said wing spar comprising a wing-spar cap angle that is attached to a wing spar web, said wing spar web having an upper edge and a lower edge and an inboard end that attaches to said root rib, a first series of wing-attach bolt-holes that is provided in said upper edge and a second series of wing-attach bolt-holes that is provided in said lower edge of said wing spar web, wherein said root rib is angled relative to a vertical plane of said **[Lake model amphibious airplanes]** airplane, and wherein said inboard end of said wing spar has an inboard-end angle that corresponds to an angle of said root rib, said modification kit comprising:

an upper doubler-strap and an upper filler-strap;

a lower doubler-strap and a lower filler-strap; and

a plurality of wing-spar attachment-bolts;

wherein each said upper filler-strap and each said upper doubler-strap have a third series of wing-attach bolt-holes that corresponds precisely with a first series of wing-attach bolt-holes in an upper edge of a wing spar web, and said lower filler-strap and said lower doubler-strap have a fourth series of wing-attach bolt-holes that corresponds precisely with a second series of wing-attach bolt-holes in a lower edge of said wing spar;

wherein said upper and said lower doubler-straps have a doubler-protective-coating and said upper and said lower filler-straps have a filler-protective-coating, and

wherein said upper doubler-strap has an upper inboard-end angle and said

lower doubler-strap has a lower inboard end angle.

7. The kit of **Claim 1**, wherein said doubler-protective coating is a powder coating that is heat-cured to form a ceramic coating **[SermeTel ® protective coating]**.

Claims 2 - 6 and **8 - 14** remain unchanged.

New Claims :

15. The kit of **Claim 7**, ~~wherein~~ said ceramic coating is a SermeTel® ceramic coating.

16. The kit of **Claim 7**, ~~wherein said ceramic~~ coating is a Midrofin Allseal® ceramic coating.

PATENT & TRADEMARK OFFICE MAY 1 0 2001

What is a Standard Part?

Definition
Fastener Quality Act
Aircraft Safety Act of 2000
Current Issues
Alerts
Additional Info

Mentioning standard parts usually brings to mind the thought of merely "nuts or bolts," when, in fact, other types of parts as well as materials used to produce aviation parts may fall under the category of "standard part."

A standard part is a part or material that conforms to an established industry or U.S. government published specification. The FAA's acceptance of a "standard part" as an approved part is based on the certification that the part has been designed and produced in accordance with an independent established set of specifications and criteria.

"Standard part" is not defined in Title 14 of the Code of Federal Regulations. Section 21.303(b) provides four exceptions to the requirement to hold a Parts Manufacturer Approval to produce replacement and modification aircraft parts. Section 21.303(b)(4) provides the exception for standard parts (bolts and nuts) - parts that conform to established industry or U.S. specifications.

The FAA has published a non-regulatory definition of "standard part" as well as interpretative information regarding what criteria parts must meet to come under the standard part category. Advisory Circular 21-29B, Detecting and Reporting Suspected Unapproved Parts, provides the following definition of standard part:

> A part manufactured in complete compliance with an established industry or U.S. government specification which includes design, manufacturing, test and acceptance criteria, and uniform identification requirements; or for a type of part which the Administrator has found demonstrates conformity based solely on meeting performance criteria, is in complete compliance with an established industry or U.S. government specification which contains performance criteria, test and acceptance criteria, and uniform identification requirements. The specification must include all information necessary to produce and conform the part and be published so that any party may manufacture the part. Examples include, but are not limited to, National Aerospace Standard (NAS), Army-Navy Aeronautical Standard (AN), Society of Automotive Engineers (SAE), SAE Sematec, Joint Electron Device Engineering Council, Joint Electron Tube Engineering Council, and American National Standards Institute (ANSI).

This definition incorporates two categories of standard part criteria. Initially, the FAA recognized as "standard" those parts that met published specifications that included information clearly establishing design, materials, manufacture, and uniform identification requirements.

The FAA issued a subsequent interpretation of "standard part" that provided for a class of parts that conform to a standard not based on their physical configuration but on their meeting a specified performance criterion. The FAA stated this second category of "standard parts" is best exemplified by discrete electrical and electronic parts. See 62 Fed. Reg. 9,923 (1997). The FAA must make a specific finding of applicability to a class of parts before the "performance only" criteria can be used.

Regulatory Oversight

The FAA does not certificate manufacturers of standard parts. However, when a type design calls for the installation of a standard part, the FAA may conduct surveillance of the manufacturer and/or supplier of that part.

The FAA has previously noted that standard part manufacturers are subject to continuing in-depth audits by their customers, and these audits provide an appropriate degree of confidence that the standards are being met. A standard part must conform to the designated part specification in order to qualify as a standard part. Accordingly, the production of a standard part offered for sale for installation on a type-certificated product where that part does not conform to the standard part specification may be a violation of section 21.303(a).

Recognizing that billions of fasteners are used in the American economy each year, Congress enacted the Fastener Quality Act (FQA) (15 U.S.C. 5401). Enacted in 1990, the FQA has been subsequently amended several times; however, the basic intent remains the same, i.e., to ensure the quality of fasteners and to

Express Mailed on: 05/10/01
Mailing Label No.: EL 791413234 US

prevent mismarked, misrepresented and counterfeit fasteners from entering the commercial market. Numerous articles have been written on the FQA; however, several points are noteworthy.

For purposes of the FQA, fastener is defined as:

> A metallic screw, nut, bolt, or stud having internal or external threads, with a nominal diameter of 6 millimeters or greater, in the case of such items described in metric terms, or ¼ inch or greater, in the case of such items described in terms of the English system of measurement, or a load-indicating washer, that is through-hardened or represented as meeting a consensus standard that calls for through-hardening, and that is grade identification marked or represented as meeting a consensus standard that requires grade identification marking....

The FQA then provides various types and configurations of fasteners that are exempt from the Act, including fasteners specifically manufactured for use on an aircraft if the quality and suitability of those fasteners have been approved by the FAA or by a foreign airworthiness authority. Although the U.S. Department of Commerce is responsible for implementation and enforcement of the FQA, this exemption provides that the FAA has the regulatory oversight and enforcement for fasteners approved for installation on aircraft.

Standard or ???

Standard parts are produced in accordance with *published* specifications and criteria. Incident to an enhanced enforcement program initiated by the FAA to bring parts manufacturers into compliance with section 21.303, it became obvious that many specialized fasteners, seals, and bearings are manufactured to specifications that are known only to the manufacturer. Obtaining a Parts Manufacturer Approval for these specialized groups of fasteners, seals, and bearings would not have been practical, and yet these groups of parts fell outside the criteria for standard part since their specifications are not published.

To provide approvals under which these groups of parts could be produced, the FAA issued the following Technical Standard Orders (TSO): TSO-C148, Aircraft Fasteners; TSO-C149, Aircraft Bearings; and TSO-C150, Aircraft Seals. Authorizations for these TSO's are not issued for standard parts nor for parts used in critical applications. In contrast to "standard part" nuts, bolts, etc., these fasteners, bearings, and seals must meet the TSO minimum performance, marking and installation approval requirements.

Eleven companies currently hold authorization for TSO-C148; six companies hold authorization for TSO-C149; and four companies hold authorization for TSO-C150. Although only 21 companies hold these authorizations, hundreds of thousands of individual parts are produced under the TSO's. Producers holding a TSO authorization are production approval holders and are subject to FAA regulatory oversight and enforcement.

Considerations

When purchasing and installing standard parts, consider the following:

- A Certificate of Conformity (C of C) should be provided by the producer of a standard part.
- A standard part should carry a mark indicating the part has been produced in accordance with the specification requirements.
- A part is no longer considered "standard" if it is used in a critical application that imposes qualification or quality control requirements beyond the standard specification.
- To facilitate traceability, commingling like fasteners from different lots is not recommended.
- Section 21.303(b)(4) provides that acceptable government specifications are limited to those published by the U.S. Government. Parts produced to a foreign standard may, however, be acceptable for installation on foreign type-certificated aircraft and products.
- Installation of a standard part must be in accordance with the requirements of part 43. Generally, a standard part may be replaced with an identical standard part; however, substituting standard parts

would require a demonstration of acceptability in accordance with part 43.

- The purpose of the recently enacted "Aircraft Safety Act of 2000" is to safeguard against the dangers posed by the installation of nonconforming, defective or counterfeit aircraft and space vehicle parts. This criminal law prohibits false or fraudulent representations regarding the sale or installation of aircraft and space vehicle parts. The law provides penalties that include fines up to $20 million and/or imprisonment for a term of years to life. Specifically, the law prohibits any falsification or concealment of any material fact concerning any aircraft or space vehicle part; prohibits any materially fraudulent representation concerning any aircraft or space vehicle part; and prohibits the making or use of any materially false writing, entry, certification, document, record, data plate, label, or electronic communication concerning any aircraft or space vehicle part. The law also prohibits fraudulent representations relating to the export, import, introduction, sale, trade or installation of aircraft or space vehicle parts. Enacted as Section 506 of the Federal Aviation Administration Authorization Act, the new law will be codified as Chapter 2 of Title 18, United States Code, which deals with aircraft and motor vehicle offenses.

Current Issues Involving Standard Parts

9/9/00

A Suspected Unapproved Parts (SUP) investigation is addressing non-conforming bulk wire rope, a material produced to a military specification that may be used in the fabrication of aircraft control cables. Click here to view photographs that illustrate some noted differences between the "approved" and unapproved wire rope. To obtain additional details about the wire rope, view Unapproved Parts Notification (UPN) 99-273 [.txt | .doc], issued May 18, 2000, to alert the industry.

Alerts

There are several resources available to obtain additional information on unapproved parts. Alerts issued by the FAA can be found in AC 43.16, and on this website under Unapproved Parts. The Government Industry Data Exchange Program (GIDEP) also maintains a database of various alert info.

Additional Information

Reference material in Advisory Circular 65-9, Airframe and Powerplant Mechanics General Handbook, Chapter 5 [1.9 MB file] and Chapter 6 [3.2 MB file], contains additional information on parts and materials that are manufactured and conform to established industry or U.S. Government standards.

OIPE JC168
MAY 1 0 2001
PATENT & TRADEMARK OFFICE

IN THE UNITED STATES PATENT AND TRADEMARK OFFICE

Application No.: 09/696,127
Filing Date: October 25, 2001
Applicants: Jack M. TARBOX and Philip J. BAKER
Title: WING SPAR MODIFICATION KIT
Group Art Unit: 3641
Examiner: J. Woodrow ELDRED

Attorney No.: 00-124

To: Commissioner for Patents
Washington, D.C. 20231

9 Petition
w/ Prior Art att
5/17/01
Holmes

PETITION REQUESTING CONSIDERATION OF SUPPLEMENTAL INFORMATION DISCLOSURE STATEMENT, PURSUANT TO 37 C.F.R. § 1.97

Dear Sir:

Applicant respectfully requests review of the references cited in the enclosed Information Disclosure Statement (PTO-1449). A careful and thorough search of the prior art relevant to the above-cited application was carried out at the time a petition to make special was filed. Upon further study of the application, however, the undersigned now requests consideration of the enclosed reference.

Reference No. 1 of the attached IDS (PTO-1449) is a Service Bulletin B-79 of the company Revo, Inc., published on May 27, 1999, and referenced in an Airworthiness Directive AD 2000-10-22, published on June 20, 2000. The Bulletin B-79 discloses the inspection and repair procedure for cracks and corrosion on a wing spar doubler and on a spar cap angle and the installation procedure for a B-79 Wing Spar Modification Kit.

Reference No. 2 is a Notice of Proposed Rulemaking, published in the Federal Register on October 6, 1999, Vol. 64, No. 193. This Notice refers to the B-79 Service Bulletin of REVO, Inc.

The Wing Spar Modification Kit shown in the B-79 Bulletin discloses a plurality of doubler straps, fillers, and cap angles. It does not disclose the inboard-end angle on the doubler straps or the corrosion protection coating on the doubler straps, which had not yet been developed at the time the Bulletin was released.

A check for the petition fee of $130.00 is enclosed. Applicants respectfully request that Examiner review the submitted information and return a copy of the IDS with the initials of the Examiner and the date.

Respectfully submitted,

Patricia Mathers

May 10, 2001

Patricia M. Mathers
Attorney for Applicants
Reg. No. 44,906
Thomas L. Bohan & Associates
371 Fore Street
Portland, ME 04101
(207) 773-3132

Enclosed:
Check no.
Fee Transmittal
IDS (PTO-1449)

Express Mailed on: 05/10/2001
Mailing Label No.: EL291413234US

05-11-01 3644

Express Mailed on: 5/10/2001

Mailing Label No.: EL291413234US

OIPE JC188 MAY 10 2001 PATENT & TRADEMARK OFFICE

Please type a plus sign (+) inside this box → [+]

PTO/SB/21 (08-00)
Approved for use through 10/31/2002. OMB 0651-0031
U.S. Patent and Trademark Office: U.S. DEPARTMENT OF COMMERCE
Under the Paperwork Reduction Act of 1995, no persons are required to respond to a collection of information unless it displays a valid OMB control number.

TRANSMITTAL FORM

(to be used for all correspondence after initial filing)

Application Number	09/696,127
Filing Date	10-25-2000
First Named Inventor	Jack M. TARBOX, et al
Group Art Unit	3644
Examiner Name	Woodrow Eldred
Total Number of Pages in This Submission: 28	Attorney Docket Number: 00-124

ENCLOSURES *(check all that apply)*

- [x] Fee Transmittal Form
  - [x] Fee Attached
- [x] Amendment / Reply
  - [ ] After Final
  - [ ] Affidavits/declaration(s)
- [ ] Extension of Time Request
- [ ] Express Abandonment Request
- [x] Information Disclosure Statement
- [ ] Certified Copy of Priority Document(s)
- [ ] Response to Missing Parts/ Incomplete Application
  - [ ] Response to Missing Parts under 37 CFR 1.52 or 1.53
- [ ] Assignment Papers *(for an Application)*
- [ ] Drawing(s)
- [ ] Licensing-related Papers
- [x] Petition
- [ ] Petition to Convert to a Provisional Application
- [ ] Power of Attorney, Revocation Change of Correspondence Address
- [ ] Terminal Disclaimer
- [ ] Request for Refund
- [ ] CD, Number of CD(s) _____
- [ ] After Allowance Communication to Group
- [ ] Appeal Communication to Board of Appeals and Interferences
- [ ] Appeal Communication to Group *(Appeal Notice, Brief, Reply Brief)*
- [ ] Proprietary Information
- [ ] Status Letter
- [x] Other Enclosure(s) *(please identify below)*:

Exhibit "A"
Return postcard

Remarks

RECEIVED
MAY 16 2001
TC 3600 MAIL ROOM

SIGNATURE OF APPLICANT, ATTORNEY, OR AGENT

Firm *or* Individual name	Thomas L. Bohan & Associates
Signature	Patricia Mathers
Date	May 10, 2001

CERTIFICATE OF MAILING

I hereby certify that this correspondence is being deposited with the United States Postal Service with sufficient postage as first class mail in an envelope addressed to: Commissioner for Patents, Washington, DC 20231 on this date: _____

Typed or printed name			
Signature		Date	

Burden Hour Statement: This form is estimated to take 0.2 hours to complete. Time will vary depending upon the needs of the individual case. Any comments on the amount of time you are required to complete this form should be sent to the Chief Information Officer, U.S. Patent and Trademark Office, Washington, DC 20231. DO NOT SEND FEES OR COMPLETED FORMS TO THIS ADDRESS. SEND TO: Assistant Commissioner for Patents, Washington, DC 20231.

Express Mailed on: 5/10/2001
Mailing Label No.: EL291413234US

OIPE JC168 MAY 10 2001 PATENT & TRADEMARK OFFICE

PTO/SB/17 (09-00)
Approved for use through 10/31/2002. OMB 0651-0032
U.S. Patent and Trademark Office; U.S. DEPARTMENT OF COMMERCE
Under the Paperwork Reduction Act of 1995, no persons are required to respond to a collection of information unless it displays a valid OMB control number.

FEE TRANSMITTAL for FY 2001

Patent fees are subject to annual revision.

TOTAL AMOUNT OF PAYMENT ($) 130.00

Complete if Known	
Application Number	09/696,127
Filing Date	October 25, 2000
First Named Inventor	TARBOX, Jack M.
Examiner Name	J. Woodrow Eldred
Group Art Unit	3644
Attorney Docket No.	00-124

METHOD OF PAYMENT

1. ☐ The Commissioner is hereby authorized to charge indicated fees and credit any overpayments to:
   - Deposit Account Number: 501517
   - Deposit Account Name: Thomas L. Bohan & Associates
   - ☑ Charge Any Additional Fee Required Under 37 CFR 1.16 and 1.17
   - ☐ Applicant claims small entity status. See 37 CFR 1.27
2. ☑ **Payment Enclosed:** ☑ Check ☐ Credit card ☐ Money Order ☐ Other

FEE CALCULATION

1. BASIC FILING FEE

Large Entity Fee Code	Large Entity Fee ($)	Small Entity Fee Code	Small Entity Fee ($)	Fee Description	Fee Paid
101	710	201	355	Utility filing fee	
106	320	206	160	Design filing fee	
107	490	207	245	Plant filing fee	
108	710	208	355	Reissue filing fee	
114	150	214	75	Provisional filing fee	

SUBTOTAL (1) ($)

2. EXTRA CLAIM FEES

	Extra Claims		Fee from below		Fee Paid
Total Claims		-20** =		X	=
Independent Claims		- 3** =		X	=
Multiple Dependent					=

Large Entity Fee Code	Large Entity Fee ($)	Small Entity Fee Code	Small Entity Fee ($)	Fee Description
103	18	203	9	Claims in excess of 20
102	80	202	40	Independent claims in excess of 3
104	270	204	135	Multiple dependent claim, if not paid
109	80	209	40	** Reissue independent claims over original patent
110	18	210	9	** Reissue claims in excess of 20 and over original patent

SUBTOTAL (2) ($)

**or number previously paid, if greater; For Reissues, see above

FEE CALCULATION (continued)

3. ADDITIONAL FEES

Large Entity Fee Code	Large Entity Fee ($)	Small Entity Fee Code	Small Entity Fee ($)	Fee Description	Fee Paid
105	130	205	65	Surcharge - late filing fee or oath	
127	50	227	25	Surcharge - late provisional filing fee or cover sheet	
139	130	139	130	Non-English specification	
147	2,520	147	2,520	For filing a request for *ex parte* reexamination	
112	920*	112	920*	Requesting publication of SIR prior to Examiner action	
113	1,840*	113	1,840*	Requesting publication of SIR after Examiner action	
115	110	215	55	Extension for reply within first month	
116	390	216	195	Extension for reply within second month	
117	890	217	445	Extension for reply within third month	
118	1,390	218	695	Extension for reply within fourth month	
128	1,890	228	945	Extension for reply within fifth month	
119	310	219	155	Notice of Appeal	
120	310	220	155	Filing a brief in support of an appeal	
121	270	221	135	Request for oral hearing	
138	1,510	138	1,510	Petition to institute a public use proceeding	
140	110	240	55	Petition to revive - unavoidable	
141	1,240	241	620	Petition to revive - unintentional	
142	1,240	242	620	Utility issue fee (or reissue)	
143	440	243	220	Design issue fee	
144	600	244	300	Plant issue fee	
122	130	122	130	Petitions to the Commissioner	130.00
123	50	123	50	Petitions related to provisional applications	
126	240	126	240	Submission of Information Disclosure Stmt	
581	40	581	40	Recording each patent assignment per property (times number of properties)	
146	710	246	355	Filing a submission after final rejection (37 CFR § 1.129(a))	
149	710	249	355	For each additional invention to be examined (37 CFR § 1.129(b))	
179	710	279	355	Request for Continued Examination (RCE)	
169	900	169	900	Request for expedited examination of a design application	

Other fee (specify) _____

* Reduced by Basic Filing Fee Paid

SUBTOTAL (3) ($) 130.00

RECEIVED MAY 15 2001 GROUP MAIL ROOM

SUBMITTED BY				Complete *(if applicable)*	
Name *(Print/Type)*	Patricia M. Mathers	Registration No. *(Attorney/Agent)*	44,906	Telephone	(207) 773-3132
Signature	Patricia M. Mathers			Date	5/10/01

WARNING: Information on this form may become public. Credit card information should not be included on this form. Provide credit card information and authorization on PTO-2038.

Burden Hour Statement: This form is estimated to take 0.2 hours to complete. Time will vary depending upon the needs of the individual case. Any comments on the amount of time you are required to complete this form should be sent to the Chief Information Officer, U.S. Patent and Trademark Office, Washington, DC 20231. DO NOT SEND FEES OR COMPLETED FORMS TO THIS ADDRESS. SEND TO: Assistant Commissioner for Patents, Washington, DC 20231.

Express Mailed on: 05/10/2001
Mailing Label No.: EL 774 [illegible] US

Please type a plus sign (+) inside this box → [+]

PTO/SB/08B (10-96)
Approved for use through 10/31/99. OMB 0651-0031
Patent and Trademark Office: U.S. DEPARTMENT OF COMMERCE
Under the Paperwork Reduction Act of 1995, no persons are required to respond to a collection of information unless it contains a valid OMB control number.

OIPE JC1 MAY 10 2001 PATENT & TRADEMARK OFFICE

Substitute for form 1449B/PTO

INFORMATION DISCLOSURE STATEMENT BY APPLICANT

(use as many sheets as necessary)

Sheet 1 of 1

Complete if Known	
Application Number	09/696,127
Filing Date	October 25, 2000
First Named Inventor	TARBOX, Jack M.
Group Art Unit	3644
Examiner Name	Woodrow Eldred
Attorney Docket Number	00-124

OTHER PRIOR ART -- NON PATENT LITERATURE DOCUMENTS			
Examiner Initials*	Cite No.[1]	Include name of the author (in CAPITAL LETTERS), title of the article (when appropriate), title of the item (book, magazine, journal, serial, symposium, catalog, etc.), date, page(s), volume-issue number(s), publisher, city and/or country where published.	T[2]
JWE	1	- REVO, INC. SERVICE BULLETIN B-79 OF MAY 27, 1999	
JWE	2	- NOTICE OF PROPOSED RULEMAKING, IN: FEDERAL REGISTER, OCTOBER 6, 1999, VOLUME 64, NUMBER 193	

RECEIVED
MAY 16 2001
TC 3600 MAIL ROOM

Examiner Signature	Woodrow Eldred	Date Considered	8-7-01

*EXAMINER: Initial if reference considered, whether or not citation is in conformance with MPEP 609. Draw line through citation if not in conformance and not considered. Include copy of this form with next communication to applicant.

[1] Unique citation designation number. [2] Applicant is to place a check mark here if English language Translation is attached.

Burden Hour Statement: This form is estimated to take 2.0 hours to complete. Time will vary depending upon the needs of the individual case. Any comments on the amount of time you are required to complete this form should be sent to the Chief Information Officer, Patent and Trademark Office, Washington, DC 20231. DO NOT SEND FEES OR COMPLETED FORMS TO THIS ADDRESS. SEND TO: Assistant Commissioner for Patents, Washington, DC 20231.

UNITED STATES DEPARTMENT OF COMMERCE
Patent and Trademark Office
Address: COMMISSIONER OF PATENTS AND TRADEMARKS
Washington, D.C. 20231

APPLICATION NO.	FILING DATE	FIRST NAMED INVENTOR	ATTORNEY DOCKET NO.
09/696,127	10/25/00	TARBOX	J 00-124

EXAMINER	
ELDRED, J	
ART UNIT	PAPER NUMBER
3644	6

024124 PM82/0426
THOMAS L. BOHAN & ASSOCIATES
371 FORE STREET
SUITE 202
PORTLAND ME 04101

DATE MAILED: 04/26/01

Please find below and/or attached an Office communication concerning this application or proceeding.

Commissioner of Patents and Trademarks

PTO-90C (Rev. 2/95)
*U.S. GPO: 2000-473-000/44602
1- File Copy

Office Action Summary	Application No.	Applicant(s)
	09/696,127	Tarbox et al
	Examiner	Group Art Unit
	Woodrow Eldred	3644

—The MAILING DATE of this communication appears on the cover sheet beneath the correspondence address—

Period for Response

A SHORTENED STATUTORY PERIOD FOR RESPONSE IS SET TO EXPIRE 3 MONTH(S) FROM THE MAILING DATE OF THIS COMMUNICATION.

- Extensions of time may be available under the provisions of 37 CFR 1.136(a). In no event, however, may a response be timely filed after SIX (6) MONTHS from the mailing date of this communication.
- If the period for response specified above is less than thirty (30) days, a response within the statutory minimum of thirty (30) days will be considered timely.
- If NO period for response is specified above, such period shall, by default, expire SIX (6) MONTHS from the mailing date of this communication .
- Failure to respond within the set or extended period for response will, by statute, cause the application to become ABANDONED (35 U.S.C. § 133).

Status

☐ Responsive to communication(s) filed on _____.

☐ This action is **FINAL.**

☐ Since this application is in condition for allowance except for formal matters, **prosecution as to the merits is closed** in accordance with the practice under *Ex parte Quayle*, 1935 C.D. 1 1; 453 O.G. 213.

Disposition of Claims

☒ Claim(s) 1-14 is/are pending in the application.

Of the above claim(s) _____ is/are withdrawn from consideration.

☐ Claim(s) _____ is/are allowed.

☒ Claim(s) 1-14 is/are rejected.

☐ Claim(s) _____ is/are objected to.

☐ Claim(s) _____ are subject to restriction or election requirement.

Application Papers

☐ See the attached Notice of Draftsperson's Patent Drawing Review, PTO-948.

☐ The proposed drawing correction, filed on _____ is ☐ approved ☐ disapproved.

☐ The drawing(s) filed on _____ is/are objected to by the Examiner.

☐ The specification is objected to by the Examiner.

☐ The oath or declaration is objected to by the Examiner.

Priority under 35 U.S.C. § 119 (a)-(d)

☐ Acknowledgment is made of a claim for foreign priority under 35 U.S.C. § 11 9(a)-(d).

☐ All ☐ Some* ☐ None of the CERTIFIED copies of the priority documents have been

☐ received.

☐ received in Application No. (Series Code/Serial Number) _____.

☐ received in this national stage application from the International Bureau (PCT Rule 1 7.2(a)).

*Certified copies not received: _____.

Attachment(s)

☒ Information Disclosure Statement(s), PTO-1449, Paper No(s). 3

☐ Interview Summary, PTO-413

☒ Notice of References Cited, PTO-892

☐ Notice of Informal Patent Application, PTO-152

☐ Notice of Draftsperson's Patent Drawing Review, PTO-948

☐ Other _____

Office Action Summary

1. The following is a quotation of the second paragraph of 35 U.S.C. 112:

> The specification shall conclude with one or more claims particularly pointing out and distinctly claiming the subject matter which the applicant regards as his invention.

2. Claims 1-14 are rejected under 35 U.S.C. 112, second paragraph, as being indefinite for failing to particularly point out and distinctly claim the subject matter which applicant regards as the invention.

In claim 1, lines 1 and 7, the phrase "Lake model amphibious airplane" is vague and indefinite since the phrase contains what appears to be a trademarked name and is thus not clearly defined since a trademark defines the source of an object, not its parameters. The limitations of the claimed plane should be made in generic terms of art. Likewise, claim 7 contains an improper trademark name. Also, the limitations of the bolts of claim 14 is indefinite, since the designations made are subject to change.

3. Claims 1-14 would be allowable if rewritten or amended to overcome the rejection(s) under 35 U.S.C. 112, 2nd paragraph, set forth in this Office action.

4. The prior art made of record and not relied upon is considered pertinent to applicant's disclosure. Morris et al are cited as being of interest since they disclose aircraft wing assembly joint.

5. Any inquiry concerning this communication or earlier communications from the examiner should be directed to J. Woodrow Eldred whose telephone number is (703) 306-4151.

Any inquiry of a general nature or relating to the status of this application or proceeding should be directed to the Group receptionist whose telephone number is (703) 306-4177.

J. Woodrow Eldred

J. WOODROW ELDRED
PRIMARY EXAMINER
GROUP 220

FORM PTO-892 (REV. 2-92) U.S. DEPARTMENT OF COMMERCE PATENT AND TRADEMARK OFFICE	SERIAL NO.	GROUP ART UNIT	ATTACHMENT TO PAPER NUMBER
NOTICE OF REFERENCES CITED	09/696,127	3644	6
	APPLICANT(S) Tarbox et al		

U.S. PATENT DOCUMENTS

*		DOCUMENT NO.	DATE	NAME	CLASS	SUB-CLASS	FILING DATE IF APPROPRIATE
	A	5944286	8-1999	Morris et al	244	131	
	B						
	C						
	D						
	E						
	F						
	G						
	H						
	I						
	J						
	K						

FOREIGN PATENT DOCUMENTS

*		DOCUMENT NO.	DATE	COUNTRY	NAME	CLASS	SUB-CLASS	PERTINENT SHTS. DWG	PERTINENT PP. SPEC.
	L								
	M								
	N								
	O								
	P								
	Q								

OTHER REFERENCES (Including Author, Title, Date, Pertinent Pages, Etc.)

R	
S	
T	
U	

EXAMINER	DATE
Woodrow Eldred	4-20-01

* A copy of this reference is not being furnished with this office action.
(See Manual of Patent Examining Procedure, section 707.05 (a).)

Express Mailed on: 02-26 Filed
Mailing Label No.: EL291412446 U

Please type a plus sign (+) inside this box → +

PTO/SB/08A (10-96)
Approved for use through 10/31/99. OMB 0651-0031
Patent and Trademark Office: U.S. DEPARTMENT OF COMMERCE
Under the Paperwork Reduction Act of 1995, no persons are required to respond to a collection of information unless it contains a valid OMB control number.

Substitute for form 1449A/PTO

INFORMATION DISCLOSURE STATEMENT BY APPLICANT

(use as many sheets as necessary)

Sheet 1 of 1

Complete if Known	
Application Number	09/696,127
Filing Date	October 25, 2000
First Named Inventor	TARBOX, Jack M.
Group Art Unit	
Examiner Name	
Attorney Docket Number	00-124

U.S. PATENT DOCUMENTS

Examiner Initials*	Cite No.[1]	U.S. Patent Document Number	Kind Code[2] (if known)	Name of Patentee or Applicant of Cited Document	Date of Publication of Cited Document MM-DD-YYYY	Pages, Columns, Lines, Where Relevant Passages or Relevant Figures Appear
	1	3,499,622		Lugan, et al	03-10-1970	
	2	3,827,661		Ryan, et al	08-06-1974	
	3	4,411,380		McWithey, et al	10-25-1983	
	4	4,624,599		Piasecki	11-25-1986	
	5.	4,962,904		Perry, et al	10-16-1990	
	6	5,297,760		Hart-Smith	03-29-1994	
	7	5,735,626		Khatiblou, et al	04-07-1998	

OIPE JC104 FEB 06 2001 PATENT & TRADEMARK OFFICE

RECEIVED FEB 15 2001 TO 3600 MAIL ROOM

FOREIGN PATENT DOCUMENTS

Examiner Initials*	Cite No.[1]	Foreign Patent Document Office[3]	Number[4]	Kind Code[5] (if known)	Name of Patentee or Applicant of Cited Document	Date of Publication of Cited Document MM-DD-YYYY	Pages, Columns, Lines, Where Relevant Passages or Relevant Figures Appear	T[6]

Examiner Signature	Woodrow Eldred	Date Considered	4-20-01

*EXAMINER: Initial if reference considered, whether or not citation is in conformance with MPEP 609. Draw line through citation if not in conformance and not considered. Include copy of this form with next communication to applicant.

[1] Unique citation designation number. [2] See attached Kinds of U.S. Patent Documents. [3] Enter Office that issued the document, by the two-letter code (WIPO Standard ST.3). [4] For Japanese patent documents, the indication of the year of the reign of the Emperor must precede the serial number of the patent document. [5] Kind of document by the appropriate symbols as indicated on the document under WIPO Standard ST. 16 if possible. [6] Applicant is to place a check mark here if English language Translation is attached.

Burden Hour Statement: This form is estimated to take 2.0 hours to complete. Time will vary depending upon the needs of the individual case. Any comments on the amount of time you are required to complete this form should be sent to the Chief Information Officer, Patent and Trademark Office, Washington, DC 20231. DO NOT SEND FEES OR COMPLETED FORMS TO THIS ADDRESS. SEND TO: Assistant Commissioner for Patents, Washington, DC 20231.

#5

UNITED STATES PATENT & TRADEMARK OFFICE

UNDER SECRETARY OF COMMERCE FOR INTELLECTUAL PROPERTY AND DIRECTOR OF THE UNITED STATES PATENT AND TRADEMARK OFFICE
Washington, D.C. 20231

MAILED

APR 18 2001

Office of the Director
Group 3600

Thomas L. Bohan & Associates
371 Fore Street, Suite 202
Portland, ME 04101

Paper No. 5

In re Application of:
Jack M. Tarbox et al.
Serial No. 09/696,127
Filed: October 25, 2000
For: WING SPAR MODIFICATION KIT

DECISION ON PETITION TO MAKE SPECIAL (INFRINGEMENT)

This is a decision on the petition under 37 C.F.R § 1.102(d) filed February 6, 2001 to make the above-identified application special.

The petition requests that the above-identified application be made special under the procedure set forth in M.P.E.P. § 708.02, item II: Infringement.

MPEP 708.02 states that a Petition to Make Special based on Infringement must have the following: (1) the appropriate petition fee under 37 CFR 1.17(i); (2) a statement by the assignee, applicant, or attorney alleging: (A) that there is an infringing device or product actually on the market; (B) that a rigid comparison of the alleged infringing device or product with the claims of the application has been made, and that, in his or her opinion, some of the claims are unquestionably infringed; and (C) that he or she has made a careful and thorough search of the prior art, or has good knowledge of the prior art, and has sent a copy of the references deemed most closely related to the subject matter encompassed by the claims.

The petition filed February 6, 2001 includes all of the requirements above and, therefore, the petition is **GRANTED**.

The examiner is directed (1) to make an interference search for possible interfering applications; (2) to promptly examine this application out of turn; and (3) if any interfering application is discovered, to examine such application simultaneously and state in the first official letter of such application that it is being taken out of turn because of a possible interference.

Petitioner is advised that this application will continue to be special, throughout its entire prosecution and pendency, including interference and appeal, if any, only if petitioner makes a prompt *bona fide* effort, in response to each Office action, to place the application in condition for allowance, even if it is necessary to conduct an interview with the examiner to accomplish this purpose.

Steven N. Meyers
Special Programs Examiner
Technology Center 3600
(703) 308-3868

snm/snm : 4/18/01

IN THE UNITED STATES PATENT AND TRADEMARK OFFICE

RECEIVED
FEB 15 2001
TO 3600 MAIL ROOM

Application No.:	09/696,127
Filing Date:	October 25, 2000
Applicants:	Jack M. TARBOX and Philip J. BAKER
Title:	WING SPAR MODIFICATION KIT
Group Art Unit:	3641
Examiner:	(not yet assigned)
Attorney No.:	00-124

OIPE
FEB 06 2001
PATENT & TRADEMARK OFFICE
JC#04

To: Assistant Commissioner for Patents
Washington, D.C. 20231

PETITION TO MAKE SPECIAL — FOR REASONS OF INFRINGEMENT

pursuant to 37 C.F.R. § 1.102(d)

Dear sir:

1. Applicants hereby petition that the above-cited application be granted Special Status. This Petition is accompanied by a check in the amount of $130.

2. Applicants filed an application for patent on a modification kit which it developed for Lake model amphibious aircraft. The Federal Aviation Administration (FAA) issued a type certificate approving this kit for retrofitting Lake LA-4 and Lake Model 250 aircraft. On January 24, 2001, the FAA issued a Supplemental Type Certificate, approving a modification kit made by JCM Aerodesign Ltd., of Peterborough, Ontario, for retrofitting the same Lake aircraft. This second kit by JCM Aerodesign is identical to the kit developed by Applicants, and is now being sold in the United States.

02/09/2001 AZERSAW1 00000035 09696127
01 FC:122 130.00 OP

PMM
Docket No: 00-124
February 6, 2001

3. A rigid comparison of the Airtech modification kit with the kit claimed in the pending application has been made and the two kits are found to be identical. In the opinion of the undersigned, some of the claims are unquestionably infringed.

4. A careful and thorough supplemental search of the prior art was conducted and Examiner Eldred in Art Unit 3644 was consulted regarding the field of search. The following U.S. classes and subclasses were searched:

Class 244 (Aeronautics), subclasses 131, 129.1, 119, and 120.

5. A Supplemental Information Disclosure Statement (PTO-1449) and a copy of each of the references listed in the Information Disclosure Statement are enclosed. These references are as follows.

6. **Khatiblou et al (U.S. Patent 5,735,626; 1998)** discloses a thrusting rail-joint assembly for joining and rapidly separating two host structures. The assembly comprises an outer rail segment attached to a first fairing, and an inner rail segment attached to a second fairing. A doubler is attached by a single bolt to each outer side of the inner rail segment. The doubler functions as a biasing spring that urges protrusions on the outer rail segment into recesses on the inner rail segment. *See* Figs. 1 and 2 and Col. 3, line 60 to Col. 4, line 19.

7. **Hart-Smith (U.S. Patent 5,297,760; 1994)** discloses an aircraft skin lap splice in which the inner skin has fingers that extend inward, away from the edge of the splice, and that are fastened to the outer skin. The fingers absorb some of the stresses applied to the skin. *See* Figs. 4 to 9 and Col. 4, lines 39 to 58.

8. **Perry et al. (U.S. Patent 4,962,904; 1990)** discloses a transition fitting for a high strength composite panel of an airfoil member. The fitting comprises a shank extending outward from the foam core of an airfoil panel and a profiled web extending into the

foam core.

9. **Piasecki (U.S. Patent 4,624,599; 1986)** discloses a multi-tubular truss joint and method of joining tubes, wherein the end of a tube of greater diameter is fitted over the end of a tube of lesser diameter. Round tubes are flattened into an elongated and flat oval shape. Doubler plates are shaped to the contours of the tubes and are secured to the outer surfaces of the upper and lower halves of the flattened end portions of the tubes. A composite splice plate fits between the endmost portions of the two joined tubes, one plate on the upper, one on the lower flattened portion of the tubes. Riser plates are used to fill in spaces between the splice plate and the tubes. *See* Figs. 1 and 3; Col. 2, line 43 to Col. 3, line 48.

10. **McWithey et al. (U.S. Patent 4,411,380; 1983)** discloses honeycomb stiffeners for use in fabricating exterior structural panels on aerospace vehicles. Honeycomb material is fastened onto the inner surface of a cap material. The capped honeycomb material is then cut into lengths to serve as stringer-like stiffeners. The open honeycomb side of the stiffener is secured to a sheet of material designed to form the skin layer. *See* Col. 2, lines 6 to 14 and Fig. 6.

11. **Ryan et al. (U.S. Patent 3,827,661; 1974)** discloses an aircraft wing structure. The top skin of the aircraft wing is rolled to form a leading edge. A doubler is riveted to the underside of the leading edge as a means of reinforcing the leading edge. The doubler has a short upwardly extending front face and a rearwardly extending flange portion for attaching it to the underside of the leading edge.

12. **Lugan and Surcin (U.S. Patent 3,499,622; 1970)** discloses a junction between the fuselage and the wings of an aircraft. A reinforcing member and an angled member are clamped to a fillet panel and a reinforcing rib, respectively. The angled member is also riveted to the structure of the aircraft wing. *See* Col. 2, lines 34 to 57, and Figs. 1 and 2.

13. Two prior art references were cited in the Information Disclosure Sheet (PTO-1449) filed with the application on October 25, 2000. These references, **Cox (U.S. Patent 4,984,347)** and **Welch et al. (U.S. Patent 5,975,237)**, were discussed in the application and require no further discussion here.

14. Applicant believes that this Petition complies with MPEP § 708.02 II Infringement and therefore requests that this petition to make special be granted and the application be advanced out of order for examination.

Respectfully submitted,

Patricia Mathers

February 6, 2001

Patricia M. Mathers
Attorney for Applicants
Reg. No. 44,906
371 Fore Street
Portland, ME 04101
(207) 773-3132

Enclosed:
IDS (PTO-1449), dated Feb. 6, 2001
Check No. 4443

Express Mailed on: 02-06-2001
Mailing Label No.: EL291412446US

PMM
Docket No: 00-124
February 6, 2001

02-07-01

Express Mailed on: 02-06-2001
Mailing Label No.: EL291412446US

GAU 3641

#3
2-13-01
DRS

OIPE JC104
FEB 06 2001
PATENT & TRADEMARK OFFICE

Please type a plus sign (+) inside this box → +

PTO/SB/21 (08-00)
Approved for use through 10/31/2002. OMB 0651-0031
U.S. Patent and Trademark Office: U.S. DEPARTMENT OF COMMERCE
Under the Paperwork Reduction Act of 1995, no persons are required to respond to a collection of information unless it displays a valid OMB control number.

TRANSMITTAL FORM

(to be used for all correspondence after initial filing)

Application Number	09/696,127
Filing Date	10-25-2000
First Named Inventor	Jack M. TARBOX
Group Art Unit	3641
Examiner Name	(not yet assigned)
Total Number of Pages in This Submission: 7	Attorney Docket Number: 00-124

ENCLOSURES *(check all that apply)*

- ☐ Fee Transmittal Form
  - ☐ Fee Attached
- ☐ Amendment / Reply
  - ☐ After Final
  - ☐ Affidavits/declaration(s)
- ☐ Extension of Time Request
- ☐ Express Abandonment Request
- ☑ Information Disclosure Statement
- ☐ Certified Copy of Priority Document(s)
- ☐ Response to Missing Parts/ Incomplete Application
  - ☐ Response to Missing Parts under 37 CFR 1.52 or 1.53
- ☐ Assignment Papers *(for an Application)*
- ☐ Drawing(s)
- ☐ Licensing-related Papers
- ☑ Petition
- ☐ Petition to Convert to a Provisional Application
- ☐ Power of Attorney, Revocation Change of Correspondence Address
- ☐ Terminal Disclaimer
- ☐ Request for Refund
- ☐ CD, Number of CD(s) _____
- ☐ After Allowance Communication to Group
- ☐ Appeal Communication to Board of Appeals and Interferences
- ☐ Appeal Communication to Group *(Appeal Notice, Brief, Reply Brief)*
- ☐ Proprietary Information
- ☐ Status Letter
- ☑ Other Enclosure(s) *(please identify below)*:

Seven U.S. patents cited and attached to Information Disclosure Statement

Remarks

RECEIVED
FEB 15 2001
TO 3600 MAIL ROOM

SIGNATURE OF APPLICANT, ATTORNEY, OR AGENT

Firm or Individual name	Thomas L. Bohan & Associates
Signature	Patricia Matthews
Date	February 6, 2001

CERTIFICATE OF MAILING

I hereby certify that this correspondence is being deposited with the United States Postal Service with sufficient postage as first class mail in an envelope addressed to: Commissioner for Patents, Washington, DC 20231 on this date: _____

Typed or printed name			
Signature		Date	

Burden Hour Statement: This form is estimated to take 0.2 hours to complete. Time will vary depending upon the needs of the individual case. Any comments on the amount of time you are required to complete this form should be sent to the Chief Information Officer, U.S. Patent and Trademark Office, Washington, DC 20231. DO NOT SEND FEES OR COMPLETED FORMS TO THIS ADDRESS. SEND TO: Assistant Commissioner for Patents, Washington, DC 20231.

Express Mail Label No. EV 279147244 US

FEB 06 2001

PTO/SB/17 (09-00)
Approved for use through 10/31/2002. OMB 0651-0032
U.S. Patent and Trademark Office; U.S. DEPARTMENT OF COMMERCE
Under the Paperwork Reduction Act of 1995, no persons are required to respond to a collection of information unless it displays a valid OMB control number.

FEE TRANSMITTAL for FY 2001

Patent fees are subject to annual revision.

TOTAL AMOUNT OF PAYMENT	($)	130.00

Complete if Known	
Application Number	09/696,127
Filing Date	10-25-2000
First Named Inventor	TARBOX, Jack M.
Examiner Name	(not yet assigned)
Group Art Unit	3641
Attorney Docket No.	00-124

RECEIVED FEB 15 2001 TO GROUP MAIL ROOM

METHOD OF PAYMENT

1. ☐ The Commissioner is hereby authorized to charge indicated fees and credit any overpayments to:
   - Deposit Account Number: 501517
   - Deposit Account Name: Thomas L. Bohan & Associates
   - ☑ Charge Any Additional Fee Required Under 37 CFR 1.16 and 1.17
   - ☑ Applicant claims small entity status. See 37 CFR 1.27
2. ☑ **Payment Enclosed:** ☑ Check ☐ Credit card ☐ Money Order ☐ Other

FEE CALCULATION

1. BASIC FILING FEE

Large Entity Fee Code	Large Entity Fee ($)	Small Entity Fee Code	Small Entity Fee ($)	Fee Description	Fee Paid
101	710	201	355	Utility filing fee	
106	320	206	160	Design filing fee	
107	490	207	245	Plant filing fee	
108	710	208	355	Reissue filing fee	
114	150	214	75	Provisional filing fee	

SUBTOTAL (1) ($)

2. EXTRA CLAIM FEES

		Extra Claims	Fee from below	Fee Paid
Total Claims		-20** =	X	=
Independent Claims		- 3** =	X	=
Multiple Dependent				=

Large Entity Fee Code	Large Entity Fee ($)	Small Entity Fee Code	Small Entity Fee ($)	Fee Description
103	18	203	9	Claims in excess of 20
102	80	202	40	Independent claims in excess of 3
104	270	204	135	Multiple dependent claim, if not paid
109	80	209	40	** Reissue independent claims over original patent
110	18	210	9	** Reissue claims in excess of 20 and over original patent

SUBTOTAL (2) ($)

**or number previously paid, if greater; For Reissues, see above

FEE CALCULATION (continued)

3. ADDITIONAL FEES

Large Entity Fee Code	Large Entity Fee ($)	Small Entity Fee Code	Small Entity Fee ($)	Fee Description	Fee Paid
105	130	205	65	Surcharge - late filing fee or oath	
127	50	227	25	Surcharge - late provisional filing fee or cover sheet	
139	130	139	130	Non-English specification	
147	2,520	147	2,520	For filing a request for *ex parte* reexamination	
112	920*	112	920*	Requesting publication of SIR prior to Examiner action	
113	1,840*	113	1,840*	Requesting publication of SIR after Examiner action	
115	110	215	55	Extension for reply within first month	
116	390	216	195	Extension for reply within second month	
117	890	217	445	Extension for reply within third month	
118	1,390	218	695	Extension for reply within fourth month	
128	1,890	228	945	Extension for reply within fifth month	
119	310	219	155	Notice of Appeal	
120	310	220	155	Filing a brief in support of an appeal	
121	270	221	135	Request for oral hearing	
138	1,510	138	1,510	Petition to institute a public use proceeding	
140	110	240	55	Petition to revive - unavoidable	
141	1,240	241	620	Petition to revive - unintentional	
142	1,240	242	620	Utility issue fee (or reissue)	
143	440	243	220	Design issue fee	
144	600	244	300	Plant issue fee	
122	130	122	130	Petitions to the Commissioner	130.00
123	50	123	50	Petitions related to provisional applications	
126	240	126	240	Submission of Information Disclosure Stmt	
581	40	581	40	Recording each patent assignment per property (times number of properties)	
146	710	246	355	Filing a submission after final rejection (37 CFR § 1.129(a))	
149	710	249	355	For each additional invention to be examined (37 CFR § 1.129(b))	
179	710	279	355	Request for Continued Examination (RCE)	
169	900	169	900	Request for expedited examination of a design application	

Other fee (specify) _____

*Reduced by Basic Filing Fee Paid

SUBTOTAL (3) ($) 130.00

SUBMITTED BY

Name (Print/Type)	Patricia M. Mathers	Registration No. (Attorney/Agent)	44,906	Telephone	(207) 773-3132
Signature	Patricia Mathers			Date	02-06-2001

WARNING: Information on this form may become public. Credit card information should not be included on this form. Provide credit card information and authorization on PTO-2038.

Burden Hour Statement: This form is estimated to take 0.2 hours to complete. Time will vary depending upon the needs of the individual case. Any comments on the amount of time you are required to complete this form should be sent to the Chief Information Officer, U.S. Patent and Trademark Office, Washington, DC 20231. DO NOT SEND FEES OR COMPLETED FORMS TO THIS ADDRESS. SEND TO: Assistant Commissioner for Patents, Washington, DC 20231.

10-26-00

10/25/00 JC92B U.S. PTO

JC917 U.S. PTO 09/696127 10/25/00

Please type a plus sign (+) inside this box → [+]

PTO/SB/05 (12/97)
Approved for use through 09/30/00. OMB 0651-0032
Patent and Trademark Office: U.S. DEPARTMENT OF COMMERCE
Under the Paperwork Reduction Act of 1995, no persons are required to respond to a collection of information unless it displays a valid OMB control number.

UTILITY PATENT APPLICATION TRANSMITTAL

(Only for new nonprovisional applications under 37 CFR 1.53(b))

Attorney Docket No.	00-124	*Total Pages*	31
First Named Inventor or Application Identifier	TARBOX, Jack M.		
Express Mail Label No.	EL291412534US		

APPLICATION ELEMENTS

See MPEP chapter 600 concerning utility patent application contents.

ADDRESS TO: **Assistant Commissioner for Patents, Box Patent Application, Washington, DC 20231**

1. [✓] Fee Transmittal Form *(Submit an original, and a duplicate for fee processing)*
2. [✓] Specification [*Total Pages* 14] *(preferred arrangement set forth below)*
   - Descriptive title of the Invention
   - Cross References to Related Applications
   - Statement Regarding Fed sponsored R & D
   - Reference to Microfiche Appendix
   - Background of the Invention
   - Brief Summary of the Invention
   - Brief Description of the Drawings *(if filed)*
   - Detailed Description
   - Claim(s)
   - Abstract of the Disclosure
3. [✓] Drawing(s) *(35 USC 113)* [*Total Sheets* 6]
4. Oath or Declaration [*Total Pages* 3]
   - a. [✓] Newly executed (original or copy)
   - b. [ ] Copy from a prior application (37 CFR 1.63(d)) *(for continuation/divisional with Box 17 completed)* ***[Note Box 5 below]***
     - i. [ ] DELETION OF INVENTOR(S) Signed statement attached deleting inventor(s) named in the prior application, see 37 CFR 1.63(d)(2) and 1.33(b).
5. [ ] Incorporation By Reference *(useable if Box 4b is checked)* The entire disclosure of the prior application, from which a copy of the oath or declaration is supplied under Box 4b, is considered as being part of the disclosure of the accompanying application and is hereby incorporated by reference therein.
6. [ ] Microfiche Computer Program *(Appendix)*
7. Nucleotide and/or Amino Acid Sequence Submission *(if applicable, all necessary)*
   - a. [ ] Computer Readable Copy
   - b. [ ] Paper Copy (identical to computer copy)
   - c. [ ] Statement verifying identity of above copies

ACCOMPANYING APPLICATION PARTS

8. [✓] Assignment Papers (cover sheet & document(s))
9. [ ] 37 CFR 3.73(b) Statement *(when there is an assignee)* [ ] Power of Attorney
10. [ ] English Translation Document *(if applicable)*
11. [✓] Information Disclosure Statement (IDS)/PTO-1449 [✓] Copies of IDS Citations
12. [ ] Preliminary Amendment
13. [✓] Return Receipt Postcard (MPEP 503) *(Should be specifically itemized)*
14. [✓] Small Entity Statement(s) [ ] Statement filed in prior application, Status still proper and desired
15. [ ] Certified Copy of Priority Document(s) *(if foreign priority is claimed)*
16. [ ] Other: .....

17. **If a CONTINUING APPLICATION,** *check appropriate box and supply the requisite information:*
    [ ] Continuation [ ] Divisional [ ] Continuation-in-part (CIP) of prior application No: _____/_____

18. CORRESPONDENCE ADDRESS

[☑] *Customer Number or Bar Code Label* **24124** *(Insert Customer No. or Attach bar code label here)* or [ ] *Correspondence address below*

NAME					
ADDRESS					
CITY		*STATE*		*ZIP CODE*	
COUNTRY		*TELEPHONE*		*FAX*	

Burden Hour Statement: This form is estimated to take 0.2 hours to complete. Time will vary depending upon the needs of the individual case. Any comments on the amount of time you are required to complete this form should be sent to the Chief Information Officer, Patent and Trademark Office, Washington, DC 20231. DO NOT SEND FEES OR COMPLETED FORMS TO THIS ADDRESS. SEND TO: Assistant Commissioner for Patents, Box Patent Application, Washington, DC 20231.

PTO/SB/17 (09-00)
Approved for use through 10/31/2002. OMB 0651-0032
U.S. Patent and Trademark Office; U.S. DEPARTMENT OF COMMERCE
Under the Paperwork Reduction Act of 1995, no persons are required to respond to a collection of information unless it displays a valid OMB control number.

FEE TRANSMITTAL for FY 2001

Patent fees are subject to annual revision.

TOTAL AMOUNT OF PAYMENT ($) 355.00

Complete if Known	
Application Number	
Filing Date	
First Named Inventor	TARBOX, Jack M.
Examiner Name	
Group Art Unit	
Attorney Docket No.	00-124

tc917 U.S. PTO
09/696127
10/25/00

METHOD OF PAYMENT

1. ☐ The Commissioner is hereby authorized to charge indicated fees and credit any overpayments to:

Deposit Account Number: 501517

Deposit Account Name: Thomas L. Bohan & Associates

☑ Charge Any Additional Fee Required Under 37 CFR 1.16 and 1.17

☐ Applicant claims small entity status. See 37 CFR 1.27

2. ☑ **Payment Enclosed:**

☑ Check ☐ Credit card ☐ Money Order ☐ Other

FEE CALCULATION

1. BASIC FILING FEE

Large Entity Fee Code	Large Entity Fee ($)	Small Entity Fee Code	Small Entity Fee ($)	Fee Description	Fee Paid
101	710	201	355	Utility filing fee	
106	320	206	160	Design filing fee	
107	490	207	245	Plant filing fee	
108	710	208	355	Reissue filing fee	
114	150	214	75	Provisional filing fee	

SUBTOTAL (1) ($)

2. EXTRA CLAIM FEES

	Extra Claims		Fee from below	Fee Paid
Total Claims	14	-20** =		X =
Independent Claims	1	- 3** =		X =
Multiple Dependent				=

Large Entity Fee Code	Large Entity Fee ($)	Small Entity Fee Code	Small Entity Fee ($)	Fee Description
103	18	203	9	Claims in excess of 20
102	80	202	40	Independent claims in excess of 3
104	270	204	135	Multiple dependent claim, if not paid
109	80	209	40	** Reissue independent claims over original patent
110	18	210	9	** Reissue claims in excess of 20 and over original patent

SUBTOTAL (2) ($) 355.00

**or number previously paid, if greater; For Reissues, see above

FEE CALCULATION (continued)

3. ADDITIONAL FEES

Large Entity Fee Code	Large Entity Fee ($)	Small Entity Fee Code	Small Entity Fee ($)	Fee Description	Fee Paid
105	130	205	65	Surcharge - late filing fee or oath	
127	50	227	25	Surcharge - late provisional filing fee or cover sheet	
139	130	139	130	Non-English specification	
147	2,520	147	2,520	For filing a request for *ex parte* reexamination	
112	920*	112	920*	Requesting publication of SIR prior to Examiner action	
113	1,840*	113	1,840*	Requesting publication of SIR after Examiner action	
115	110	215	55	Extension for reply within first month	
116	390	216	195	Extension for reply within second month	
117	890	217	445	Extension for reply within third month	
118	1,390	218	695	Extension for reply within fourth month	
128	1,890	228	945	Extension for reply within fifth month	
119	310	219	155	Notice of Appeal	
120	310	220	155	Filing a brief in support of an appeal	
121	270	221	135	Request for oral hearing	
138	1,510	138	1,510	Petition to institute a public use proceeding	
140	110	240	55	Petition to revive - unavoidable	
141	1,240	241	620	Petition to revive - unintentional	
142	1,240	242	620	Utility issue fee (or reissue)	
143	440	243	220	Design issue fee	
144	600	244	300	Plant issue fee	
122	130	122	130	Petitions to the Commissioner	
123	50	123	50	Petitions related to provisional applications	
126	240	126	240	Submission of Information Disclosure Stmt	
581	40	581	40	Recording each patent assignment per property (times number of properties)	
146	710	246	355	Filing a submission after final rejection (37 CFR § 1.129(a))	
149	710	249	355	For each additional invention to be examined (37 CFR § 1.129(b))	
179	710	279	355	Request for Continued Examination (RCE)	
169	900	169	900	Request for expedited examination of a design application	

Other fee (specify) _____

* Reduced by Basic Filing Fee Paid

SUBTOTAL (3) ($)

SUBMITTED BY				Complete *(if applicable)*	
Name (Print/Type)	Patricia M. Mathers	Registration No. (Attorney/Agent)	44,906	Telephone	(207) 773-3132
Signature	Patricia M. Mathers			Date	10/25/2000

WARNING: Information on this form may become public. Credit card information should not be included on this form. Provide credit card information and authorization on PTO-2038.

Burden Hour Statement: This form is estimated to take 0.2 hours to complete. Time will vary depending upon the needs of the individual case. Any comments on the amount of time you are required to complete this form should be sent to the Chief Information Officer, U.S. Patent and Trademark Office, Washington, DC 20231. DO NOT SEND FEES OR COMPLETED FORMS TO THIS ADDRESS. SEND TO: Assistant Commissioner for Patents, Washington, DC 20231.

PTO/SB/09 (12-97)
Approved for use through 9/30/00. OMB 0651-0031
Patent and Trademark Office: U.S. DEPARTMENT OF COMMERCE
Under the Paperwork Reduction Act of 1995, no persons are required to respond to a collection of information unless it displays a valid OMB control number.

STATEMENT CLAIMING SMALL ENTITY STATUS (37 CFR 1.9(f) & 1.27(b))--INDEPENDENT INVENTOR	Docket Number (Optional) 00-124

Applicant, Patentee, or Identifier: JACK M. TARBOX

Application or Patent No.:

Filed or Issued:

Title: WING SPAR MODIFICATION KIT

As a below named inventor, I hereby state that I qualify as an independent inventor as defined in 37 CFR 1.9(c) for purposes of paying reduced fees to the Patent and Trademark Office described in:

- [x] the specification filed herewith with title as listed above.
- [ ] the application identified above.
- [ ] the patent identified above.

I have not assigned, granted, conveyed, or licensed, and am under no obligation under contract or law to assign, grant, convey, or license, any rights in the invention to any person who would not qualify as an independent inventor under 37 CFR 1.9(c) if that person had made the invention, or to any concern which would not qualify as a small business concern under 37 CFR 1.9(d) or a nonprofit organization under 37 CFR 1.9(e).

Each person, concern, or organization to which I have assigned, granted, conveyed, or licensed or am under an obligation under contract or law to assign, grant, convey, or license any rights in the invention is listed below:

- [x] No such person, concern, or organization exists.
- [ ] Each such person, concern, or organization is listed below.

Separate statements are required from each named person, concern, or organization having rights to the invention stating their status as small entities. (37 CFR 1.27)

I acknowledge the duty to file, in this application or patent, notification of any change in status resulting in loss of entitlement to small entity status prior to paying, or at the time of paying, the earliest of the issue fee or any maintenance fee due after the date on which status as a small entity is no longer appropriate. (37 CFR 1.28(b))

JACK M. TARBOX	PHILIP J. BAKER	
NAME OF INVENTOR	NAME OF INVENTOR	NAME OF INVENTOR
Jack M. Tarbox	Philip J. Baker	
Signature of inventor	Signature of inventor	Signature of inventor
10/24/00	10-24-00	
Date	Date	Date

Burden Hour Statement: This form is estimated to take 0.2 hours to complete. Time will vary depending upon the needs of the individual case. Any comments on the amount of time you are required to complete this form should be sent to the Chief Information Officer, Patent and Trademark Office, Washington, DC 20231. DO NOT SEND FEES OR COMPLETED FORMS TO THIS ADDRESS. SEND TO: Assistant Commissioner for Patents, Washington, DC 20231.

Express Mailed on: 10/25/2000
Mailing Label No.: EL291423534US

Wing Spar Modification Kit

BACKGROUND OF THE INVENTION

1. Field of Invention

The invention relates to the field of fixed-wing aircraft. More particularly, the invention relates to the various models of Lake amphibious aircraft, as manufactured by Aerofab, Inc.. More particularly yet, the invention relates to a device for strengthening wing spars on such aircraft.

2. Description of Prior Art

Forces exerted on the wings of aircraft during landing impose stresses on the wing structures. These stresses are even greater on wing structures of amphibious aircraft during water landings because the shock-absorbing devices that are integrated into the landing gear are not available when landing on water. It has been determined that the method of wing spar attachment used in certain Lake amphibious aircraft models may result in cracks in the wing spar, specifically, in the wing spar cap and wing spar attachment bolt-holes. The wing spar serves to attach the wing to the aircraft fuselage and these cracks have the potential to cause separation of the wing from the fuselage during flight, with obvious deleterious consequences.

Due to the seriousness of a wing spar structural failure, the Federal Aviation Administration(FAA) issued an airworthiness directive (AD) for the wing spar on the Lake models of amphibious aircraft, directing that the referenced aircraft be repaired or modified within a specific timeframe in accordance with the AD. The particular problem to be solved was the elimination of the structural deficiencies of the wing attachment due to cracks initiating at a machined notch at the flange termination point of the wing-spar cap angle. One correction proposed was frequent inspection and replacement of the wing-spar cap angle upon the detection of cracks. This solution is, however, very costly and time-consuming — it being a very labor-intensive and time-consuming task to replace parts of the wing spar, with a typical

cost of $40,000. An alternative to that first approach is to physically strengthen the wing spar prophylactically by, for example, adding an additional layer of metal to the vulnerable element.

In the field of aircraft manufacturing, the application of an additional layer of material, commonly called a "doubler," as a means of reinforcing a structural component is well known. For example, **Cox (U.S. Pat. No. 4,984,347)** describes a means of attaching a doubler to the damaged skin of an airplane as a means of reinforcing the damaged area. **Welch et al. (U.S. Pat. No. 5,975,237)** describes the use of a doubler for the purpose of reinforcing an acoustic panel for installation in the nacelle of a jet engine. Although both of these doubler inventions serve to strengthen aircraft elements, neither provides a solution to the specific problem at hand, which is not as straightforward as slapping more metal on the spar.

When using a doubler to modify a primary structural element, it is critical that the strength and rigidity properties of the doubler and the structural element complement each other. For example, a doubler-strap that is too rigid or has greater strength than the underlying element may itself cause stresses on the element and introduce additional sources of cracking and structural weakness. Conversely, a doubler-strap that is too flexible or has less strength than the underlying element will not provide the additional strength and reinforcement that is required. Without access to comprehensive engineering data on the components to be strengthened and on its related flight elements, it can be very difficult to determine the proper strength characteristics required in a doubler without having to carry out a lengthy testing process that may also include destructive tests and, consequently, be very costly because of the material costs.

A further difficulty in constructing a doubler-strap modification kit to solve the particular problem at hand is that there are a number of different aircraft models with wing spars that required strengthening, with dimensions of the area requiring strengthening varying with model, and to a lesser extent any individual plans of a particular model. It is desirable for obvious economic and safety reasons to have a strap that could be installed on all aircraft units requiring treatment.

Another factor that must be taken into account in developing a doubler as a means of structural reinforcement of a wing spar is the problem of corrosion. In order to serve its intended purpose, the wing-spar doubler must be resistant to any corrosion that could lead to structural weakness. This becomes a critical issue with amphibious planes, the wings of which may be expected to be regularly exposed to salt water to a degree not found in the non-amphibious planes that make up the vast majority of the world's aircraft. Salt water heightens the electro-voltaic effect that is present whenever dissimilar metals are in contact with one another.

Finally, as a safety issue, as well as an economic issue, the doubler reinforcement must be simple to install. Preferably, the doubler should be able to be installed using standard tools that are readily available at airplane maintenance facilities, and not require special skills beyond those of ordinary airplane maintenance personnel. In addition, it must be easily determinable upon a simple post-installation inspection that the doubler has been properly installed.

What is needed, therefore, is a cost-efficient effective means of strengthening the wing spars on all models of Lake aircraft. What is further needed is a modification that can be retrofitted to any model of Lake aircraft, properly and easily, with a minimum of disassembly and without causing collateral damage to other installed parts. What is yet further needed is such a modification that will provide a long-term solution to the wing spar cracking problem, that will not cause additional structural problems, and that is corrosion-resistant in a sea water environment and not subject to harmful electro-voltaic effects.

SUMMARY OF THE INVENTION

It is an object of the present invention to provide a simple-to-install doubler modification kit for strengthening the wing spar on Lake aircraft models. It is a yet further object of the invention to provide such a kit that will strengthen the wing spar for the service life of the aircraft, without introducing additional structural problems.

These objects have been achieved in the present invention by providing a doubler-strap modification kit comprising an upper and a lower doubler-strap of specific configuration and constitutions, a filler-strap for each doubler-strap, and a plurality of bolts, rivets, nuts, and washers to attach the doubler-straps to the wing spar. The wing spar on the aircraft comprises a wing spar web and two wing-spar cap angles, one on each side of the in-board end of the web. Each doubler-strap and filler-strap has a series of bolt-holes that corresponds precisely to the pattern of wing attach bolt-holes in the Lake wing spar web. The holes in the doubler and filler-straps are drilled with the same drilling fixture used to drill the holes in the wing spar itself so as to achieve a very high degree of precision with the same size for all matching holes. Each doubler-strap also has an additional bolt-hole on the inboard end of the strap that corresponds to a bolt-hole on the wing-spar cap angle.

The filler-strap is an additional layer of material that is used to compensate for any differences in dimension between the surfaces of the wing spar web and the wing-spar cap angle along which the doubler-strap is to be installed. When installed, the filler-strap of the present invention — which also has a series of bolt-holes that precisely match the respective pattern of holes in the wing spar web — lies flat along the edge of and in direct contact with the wing spar web; the doubler-strap is placed on top of the filler so that it lies flat along and in direct contact with the filler and extends onto and lies flat against the wing-spar cap angle. When the bolt-holes in the wing spar web, filler-strap, cap angle, and doubler-strap are properly aligned, the doubler-strap is bolted and riveted to the wing spar web and cap angle.

A filler-strap may be made of a material different from that of the doubler, for reasons of cost-effectiveness or for structural reasons. In the present invention, the web spar web is made of aluminum, so the filler-strap is also made of aluminum, to eliminate the danger of corrosion on the web spar resulting from contact between dissimilar metals. The doubler-strap, is made of steel for structural reasons. Direct contact between the aluminum filler-strap and the steel doubler-strap, however, introduces the risk of corrosion on these two parts, thereby exacerbating concerns of prolonged structural integrity. To counter this problem, the doubler-strap is coated with a protective coating, either Midrofin Allseal or preferably SermeTel ® 5380DP, and the filler-straps are coated with an alodine conversion coating and

then a primer coat. This effectively eliminates direct contact between the dissimilar metals, and, furthermore, decreases the risk of corrosion arising from salt water environments. Furthermore, the aluminum filler-strap, which is more easily replaceable than the doubler-strap, will corrode before the doubler-strap.

In order to construct a doubler-strap that could be used on all Lake model aircraft, the engineering data and drawings — including change orders generated over the past 50 years — and the results of various structural and fatigue analyses conducted on the aircraft wings were studied to determine the doubler-strap material and dimensions required to provide the needed wing-spar strengthening. A main difficulty was determining the proper dimensions to ensure a single-size doubler would fit all aircraft. In the course of solving the problem, it was determined that the initial doubler-strap prototype was too short and, although it would have solved the initial cracking problem on the wing-spar cap angle and would have satisfied the universality condition, was likely to cause additional cracking on the wing spar web in the area around the first outboard wing-attach bolt-hole. To solve this problem, the doubler and filler-straps were lengthened so as to extend further in the outboard direction and the minimum size of rivets used to attach the straps to the wing spar between the first outboard wing attach bolt and the outboard end of the strap, in addition to the bolts in the wing attach bolt-holes, was increased to AD6.

Further, it was determined that a single rectangular shape was inappropriate, since it was introducing additional and parasitic stresses onto the wing-spar cap angle. The wing spar is attached to a root rib that is then attached to the airplane body. The root rib is tipped outward relative to a central vertical plane of the aircraft, *i.e.*, the upper inboard edge of the wing is farther from the central vertical plane than is the lower inboard edge of the wing, and the inboard end of the wing spar is angled correspondingly. In order to ensure that the doubler-strap does not push against the wing-spar cap angle and introduce new stresses, the inboard end of the doubler-strap of the present invention is angled to correspond to the angle of the wing spar. Because this angled inboard end introduced a directionality, the modification kit had to be provided as a right-wing kit and a left-wing kit. It was discovered that the filler and doubler-straps could be installed incorrectly, resulting in an interference between the

doubler-strap and the wing-spar cap angle that was almost impossible to perceive because the intervention is most readily discernible when the straps are being laid in place and ascess to the area for visual inspection is effectively blocked by the arm of the person installing the parts. Once the parts are in place and the visual inspection is possible, the interference is effectively hidden from view. Although the interference was minor, it could have serious effects in the longterm on the airworthiness of the aircraft. In order to ensure that the doubler-strap is installed correctly, the right wing and left wing doubler and filler-straps are given part numbers that identify the parts as right wing or left wing parts. The particular part number is stamped on the "face forward" side of the strap, *i.e.*, the side that faces toward the person installing the strap. Assembly instructions instruct that the part number must be legible on the forward side of the wing spar by the person installing the strap for the part to be installed correctly.

BRIEF DESCRIPTION OF THE DRAWINGS

FIG. 1 is a partial view of a wing attached to the fuselage of an airplane (prior art), showing the location of the access hole for retrofitting a doubler kit according to the present invention on a wing spar.

FIG. 2 shows a perspective view of the inboard end of the wing spar (prior art) as viewed through the access hole.

FIG. 3 shows a perspective view of the inboard end of an isolated wing spar (prior art), with the side of the wing spar that faces the leading edge of the wing facing up.

FIG. 4A shows the upper doubler-strap and upper filler-strap of the present invention.

FIG. 4B shows the lower doubler-strap and lower filler-strap of the present invention.

FIG. 5 shows the isolated wing spar shown in **FIG. 3**, with the upper filler-strap of the Preferred Embodiment of the present invention in place for installation and rivet holes drilled through the wing-spar web **6**.

FIG. 6 shows a perspective view of the isolated wing spar with the upper filler-strap and upper doubler-strap of the present invention in place, showing bolts and rivets reading for insertion.

DETAILED DESCRIPTION OF THE PREFERRED EMBODIMENT OF THE INVENTION

FIG. 1 shows a partial view of a wing **21** attached to a fuselage **20** of an airplane that is indicated only schematically. The wing **21** has an inboard end **21A**, *i.e.*, the end of the wing **21** attached to the fuselage **20**, an outboard end **21B**, a leading edge **23**, and a trailing edge **24**. The wing **21** shown here is merely representative of those assembled in the models of the Lake amphibious aircraft, and is not intended to illustrate details of the shape or formation of the wing. Also shown in this view is an access hole **30**, which provides access to some internal wing components at the inboard end **21A** of the wing**21**.

FIG. 2 is a perspective view through the access hole **30**, showing wing components as viewed when the line of sight is into the access hole **30** and skewed slightly toward the inboard end **21A** and the trailing edge **24** of the wing. Visible is an inboard end of a wing spar assembly comprising a wing-spar web **6** and a wing-spar cap angle **7**. The cap angle **7** has a flange **7A** that rests on the inboard end **21A** of the wing-spar web **6** and is bolted to the wing-spar web **6** and a root rib **22**.

FIG. 3 shows a perspective view of an isolated wing spar assembly. A face forward side **6C**, *i.e.*, the side of the web **6** that faces toward the leading edge of the wing, is shown. The wing-spar web **6** has an upper web edge **6A** and a lower web edge **6B**. Located on the

respective upper and lower web edges **6A**, **6B** are five $^{3}/_{8}$" wing-attach bolt-holes **8**, including a first outboard wing attach bolt-hole **8A**. A $^{7}/_{16}$" flange bolt-hole **7B** is provided through the cap angle flange **7A** and at a matching location beneath the flange **7A** through the wing-spar web **6**.

FIG 4A shows elements of the Preferred Embodiment of the present invention: a lower doubler-strap **1**, and a lower filler-strap **3**; **FIG. 4B** shows an upper doubler-strap **2** and an upper filler-strap **4**, also according to the Preferred Embodiment. As can be seen, wing-attach bolt-holes **5** are provided in each of the doubler-straps **1, 2** and the filler-straps **3, 4**. These wing-attach bolt-holes **5** correspond in size and alignment to the wing-attach bolt-holes **8** through the wing-spar web **6**, shown in **FIG 3**. A cap-angle bolt-hole **5A** is provided through an inboard end **1A** of the upper doubler-strap **1** and also through an inboard end **2A** of the lower doubler-strap **2**. These cap-angle bolt-holes **5A** corresponds in size and alignment to the flange bolt-hole **7B** on the respective end of the cap angle **7**.

The upper and lower doubler-straps **1, 2** are constructed to fit all models of Lake aircraft. Thus, for example, all lower doubler-straps **1** have the same lower-strap width, length, and thickness dimensions, regardless of which airplane model they are to fit, and all upper doubler-straps **2** have the same upper-strap width, length, and thickness dimensions. The lower filler-straps **3** and the upper filler-straps **4**, on the other hand, have a thickness dimension that depends on the particular model of aircraft, or rather, the particular wing model, into which they are to be installed. In the Preferred Embodiment, both doubler-straps **1, 2** are made of 4340 steel and heat treated to 180,000 psi, and have a thickness of approximately $^{3}/_{16}$". The approximate overall dimensions of the lower doubler-strap **1** are 9 ½" by 1¼", and those of the upper doubler-strap **2** are 8 $^{49}/_{64}$" by 1¼". The approximate overall dimensions of the lower filler-strap **1** are 8 $^{7}/_{16}$" by 1¼" and those of the upper filler-strap **2** are 7 $^{49}/_{64}$" by 1¼".

In the Preferred Embodiment, each of the filler-straps **3, 4** is made of 2024-T3 aluminum and treated with an alodine conversion coating, and then painted with a coating of epoxy primer to protect against corrosion. Each of the doubler-straps **1, 2** is treated with a

SermeTel ® coating protecting them from corrosion arising from electro voltaic effects (contact of dissimilar metals) and/or from exposure to a sea water environment. The inner walls of the bolt-holes **5, 5A, 7B,** and **8**, as illustrated by way of example by bolt-hole inner-wall **5C** in **FIG 1**, are not coated, so as to maintain the tight tolerances called for. These holes are close-tolerance wing-attach bolt-holes with tolerances of +0.003 inch and are plugged during the coating processes to prevent the coating being applied to the inner walls.

As can be seen in **FIGS. 4A** and **4B**, the inboard end **1A** of the lower doubler-strap **1** has an inboard-end angle **1α** and the inboard end **2A** of the upper doubler-strap **2** has an inboard-end angle **2α**. In the Preferred Embodiment the inboard-end angle **1α** on the lower doubler-strap **1** is approximately 6° and the inboard-end angle **2α** on the upper doubler-strap **2** is approximately 5°. These angles correspond with the angle of the cap-angle flange **7A** relative to the length dimension of the wing-spar web **6**, so that the lower doubler-strap **1** and the upper doubler-strap **2** can fit against or close to the cap angle **7** without causing additional stress to the cap angle **7** or other wing components as a result of undue force applied by the respective doubler-strap **1, 2**. As can be seen in **FIG. 3**, the cap-angle flange **7A** exists on the face forward side **6C** of the wing spar web **6** and, therefore, the cap angle **7** and the wing spar web **6** together do not provide a flat surface on which to place the doubler-straps **1, 2**. **FIG. 5** shows the upper filler-strap **3** in place for installation on the upper edge **6A** of the wing spar, as well as an upper series of rivet holes **11A** and a lower series of rivet holes **11B** that have been drilled through the wing-spar web **6** and the corresponding filler-strap.

A Preferred Embodiment of the modification kit includes the lower doubler-strap **1** and the upper doubler-strap **2**, the lower filler-strap **3** and the upper filler-strap **4** for the particular aircraft, a plurality of wing-attach bolts **9** and a cap angle bolt **9A**, a plurality of AD 6-22 rivets **10**, and a plurality of nuts and washers (not shown) to secure the bolts. **FIG. 6** shows the same assembly as shown in **FIG 5**, with the upper doubler-strap **1** placed along the upper filler-strap **3** and on the cap-angle flange **7A**. As mentioned above, the root rib **22** of the aircraft is tipped outward so that an upper end of the rib **22** is farther from a central longitudinal axis of the airplane than is a lower end of the rib **22**. Thus, the upper edge **6A** of the wing spar web **6** is shorter than the lower edge **6B**. For this reason, the upper series of

rivet holes **11A** has five holes and the lower series of rivet holes **11B** has seven holes, as illustrated in **FIG. 5**. Both the upper and lower series of rivet holes **11A, 11B** are drilled through the wing-spar web **6**, the respective upper or lower filler-straps **3, 4** and doubler-straps **1, 2** during the retrofitting or installation process — preferably by clamping or fastening the filler-straps **3, 4** onto the respective upper or lower edge of the wing spar web **6** and then back-drilling through the wing spar web **6** *through* the filler-straps **3, 4**. The filler-straps **3, 4** are then removed from the wing spar web **6** and the locations of the rivet holes **11** in the particular left-wing or right-wing, upper or lower filler-strap **3, 4** carefully transferred to the respective right-wing or left-wing, lower doubler-strap **1** or upper doubler-strap **2** and the upper and lower series of rivet holes **11A, 11B** drilled accordingly through the respective upper doubler-strap **2** and lower doubler-strap **1**.

The lower doubler-strap **1**, upper doubler-strap **2**, lower filler-strap **3**, and upper filler strap **4** are printed with a part number on the "face forward" side of the respective part, so that when the part is oriented for installation on the face forward side **6C** of the wing spar web **6**, the part number is readily visible to the the person installing the straps. This ensures that a left-hand or right-hand modification kit is properly installed on the wing spar.

The embodiment mentioned herein is merely illustrative of the present invention. It should be understood that variations in construction and installation of the present invention may be contemplated in view of the following claims without straying from the intended scope and field of the invention herein disclosed.

What is claimed is:

1. A modification kit for retrofitting a wing spar on a Lake model amphibious airplane, said airplane having a root rib, and said wing spar comprising a wing-spar cap angle that is attached to a wing spar web, said wing spar web having an upper edge and a lower edge and an inboard end that attaches to said root rib, a first series of wing-attach bolt-holes that is provided in said upper edge and a second series of wing-attach bolt-holes that is provided in said lower edge of said wing spar web, wherein said root rib is angled relative to a vertical plane of said Lake model amphibious airplane, and wherein said inboard end of said wing spar has an inboard-end angle that corresponds to an angle of said root rib, said modification kit comprising:

an upper doubler-strap and an upper filler-strap;

a lower doubler-strap and a lower filler-strap; and

a plurality of wing-spar attachment-bolts;

wherein each said upper filler-strap and each said upper doubler-strap have a third series of wing-attach bolt-holes that corresponds precisely with a first series of wing-attach bolt-holes in an upper edge of a wing spar web, and said lower filler-strap and said lower doubler-strap have a fourth series of wing-attach bolt-holes that corresponds precisely with a second series of wing-attach bolt-holes in a lower edge of said wing spar;

wherein said upper and said lower doubler-straps have a doubler-protective-coating and said upper and said lower filler-straps have a filler-protective-coating, and

wherein said upper doubler-strap has an upper inboard-end angle and said lower doubler-strap has a lower inboard end angle.

2. The kit of Claim **1**, wherein said upper and said lower doubler-straps are made of 4340 steel.

3. The kit of Claim **2**, wherein said upper and said lower doubler-straps are heat-treated to 180,000 psi.

4. The kit of Claim **1**, wherein said upper and said lower filler-straps are made of 2024-T3 aluminum.

5. The kit of Claim **1**, wherein said upper inboard-end angle on said upper doubler-strap is approximately 5°.

6. The kit of Claim **1**, wherein said lower inboard-end angle on said lower doubler-strap is approximately 6°.

7. The kit of Claim **1**, wherein said doubler-protective-coating is a SermeTel® protective coating.

8. The kit of Claim **1**, wherein said filler-protective-coating includes a first coating that is an alodine conversion coating and a second coating that is an epoxy primer.

9. The kit of Claim **1**, wherein each bolt-hole of said third and fourth series of said wing-attach bolt-holes in said upper doubler-strap, said lower doubler-strap, said upper filler-strap, and said lower filler-strap is free of said doubler- protective-coating and of said filler-protective-coating.

10. The kit of Claim **1**, wherein said first and said second series of wing-attach bolt-holes in said wing spar web is a series of five wing-attach bolt-holes and wherein said wing-spar cap angle has a flange with at least an upper wing-attach bolt-hole and a lower wing-attach bolt-hole, and wherein each of said third and fourth series of wing-attach bolt-holes in said upper doubler-strap and said lower doubler-strap, respectively, includes a series of five bolt-holes that align with said five wing-attach bolt-holes in said wing spar web and a cap-angle flange bolt-hole at said strap inboard end that aligns with said upper wing attach bolt-hole in said cap angle, and wherein each of said third and fourth series of bolt-holes in said upper filler-strap and said lower filler-strap, respectively, is a series of five bolt-holes that align respectively with said five wing-attach bolt-holes in said upper edge and said lower edge of said wing spar web.

11. The kit of Claim **8**, wherein said wing spar web has a first series of rivet holes on said upper edge and a second series of rivet holes on said lower edge, and said upper doubler-strap and said upper filler-strap each have a series of rivet holes that corresponds to said first series of rivet holes and said lower doubler-strap and said lower filler-strap each have a series of rivet holes that corresponds to said second series of rivet holes.

12. The kit of Claim **9**, wherein said upper doubler-strap and said upper filler-strap each have a series of five rivet holes and said lower doubler-strap and said lower filler-strap each have a series of seven rivet holes.

13. The kit of Claim **1**, further comprising a plurality of wing-attach bolts, a plurality of cap angle bolts, a corresponding plurality of nuts and washers for said wing-attach bolts and said cap angle bolts, and a plurality of rivets.

14. The kit of Claim **13**, wherein said plurality of wing-attach bolts includes ten NAS 464 6A24 bolts, said plurality of cap-angle bolts includes two NAS 464-7A24 bolts, said plurality of nuts and washers includes two AN 364-720 nuts, ten AN 364-624 nuts, four AN 960-716 washers and twenty AN960-616 washers, and said plurality of rivets includes twelve AN-470-AD6-22 rivets.

ABSTRACT

A kit for reinforcing the wing spar attachment of Lake models of amphibious airplanes. The kit includes two filler-straps and two doubler-straps for each wing spar, and the necessary bolts, rivets, washers and nuts to attach the straps to the wing spar web. The doubler-straps are constructed to fit all models of Lake amphibious airplanes; the thickness of the filler-straps is, however, specific to the model of airplane or the model of wing in which they are to be installed. The doubler-straps and the filler-straps are pre-treated to protect them against corrosion and are marked so as to preclude incorrect inspection. The inboard end of the doubler-strap is angled to correspond to the angle of the wing spar relative to a vertical plane of the airplane.

Document 59-2 Filed 07/01/11 Page 14 of 97 PageID 706

SCANNED, #___

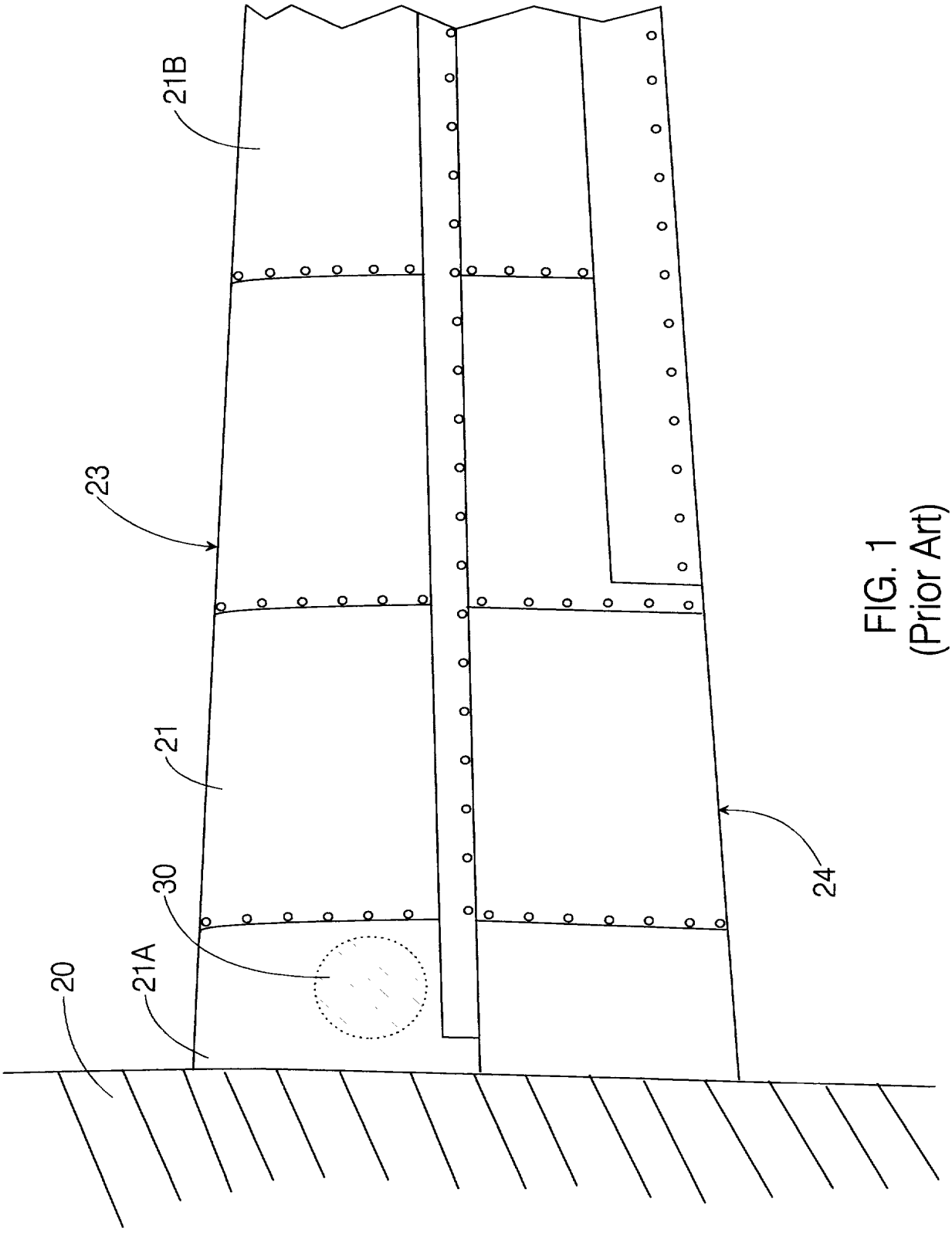

FIG. 1
(Prior Art)

SCANNED, #___

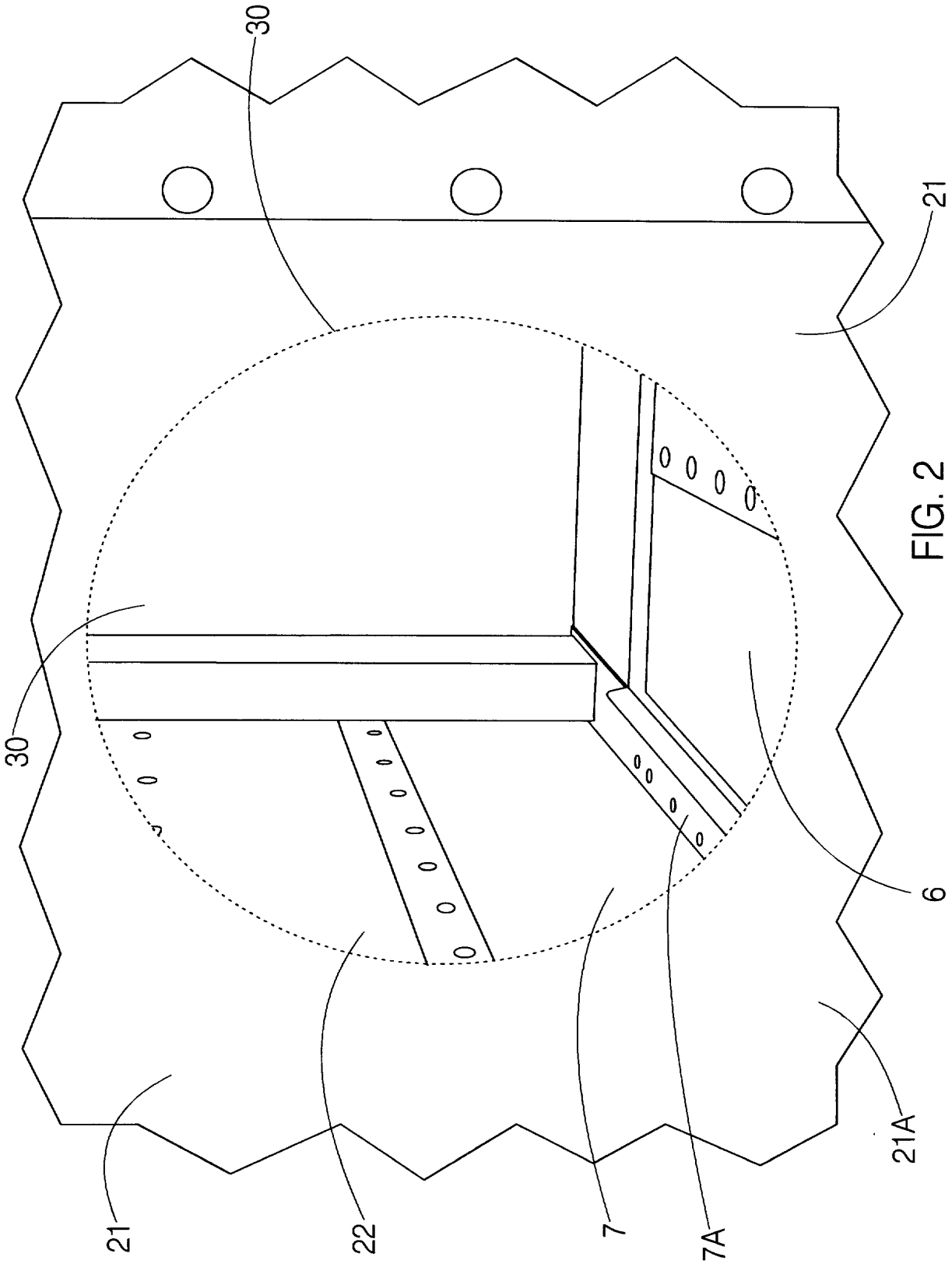

FIG. 2
(Prior Art)

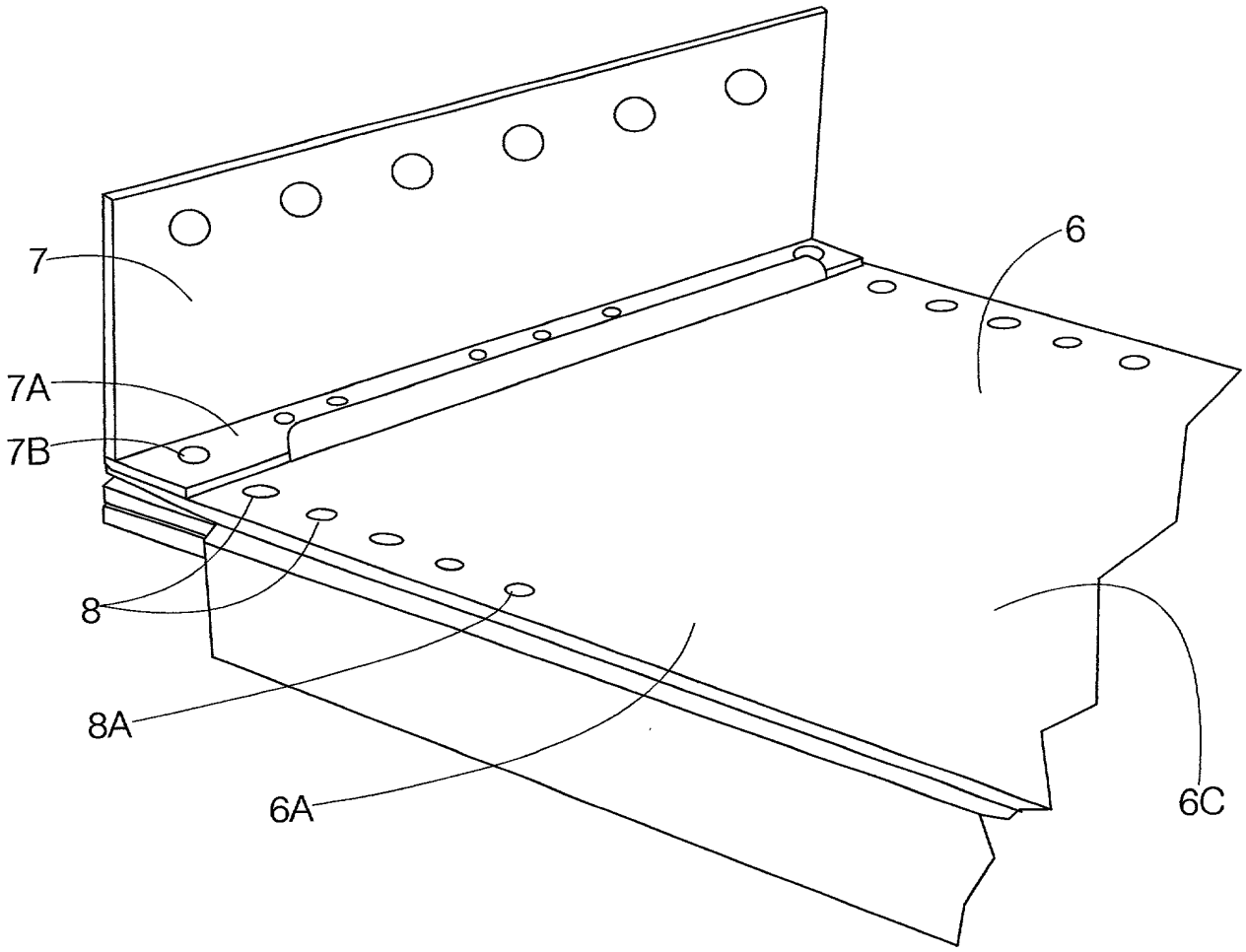

FIG. 3
(Prior Art)

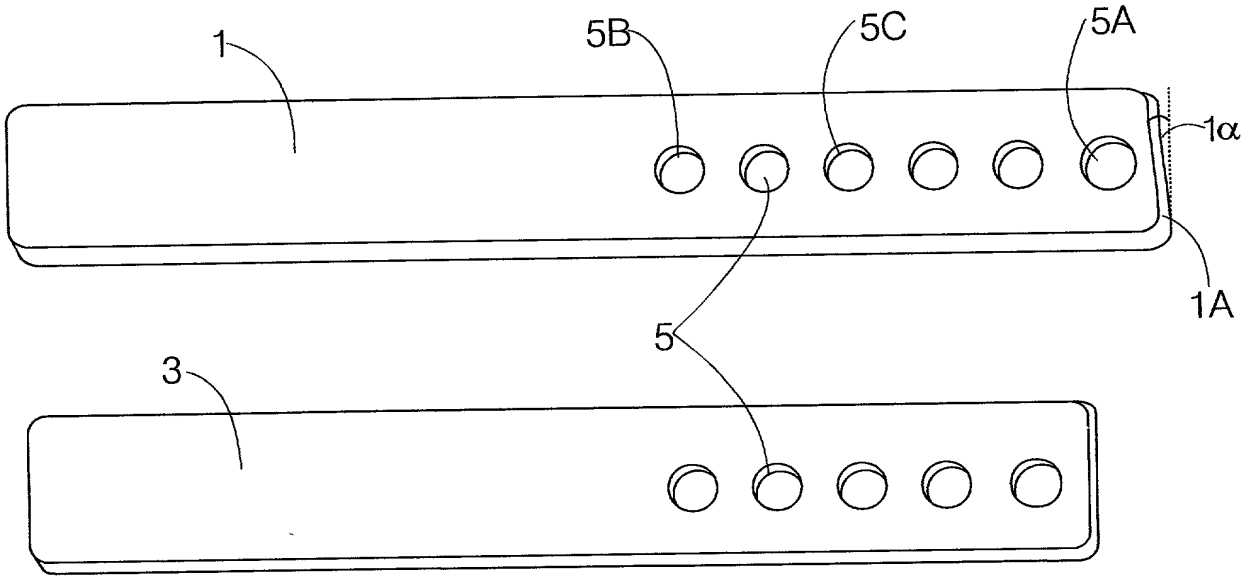

FIG. 4A

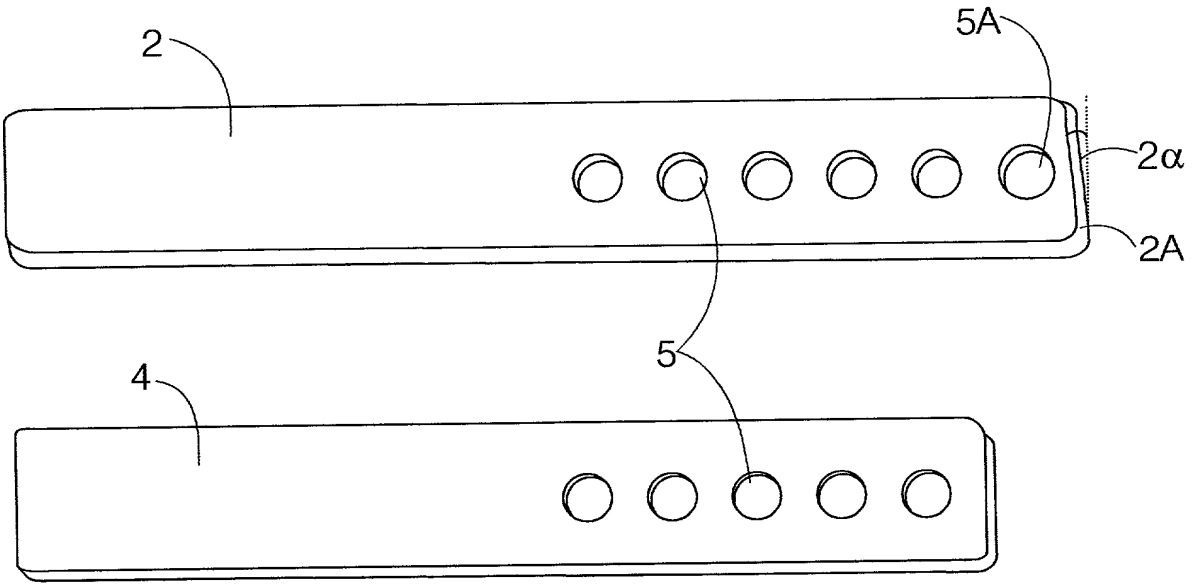

FIG. 4B

SCANNED, #____

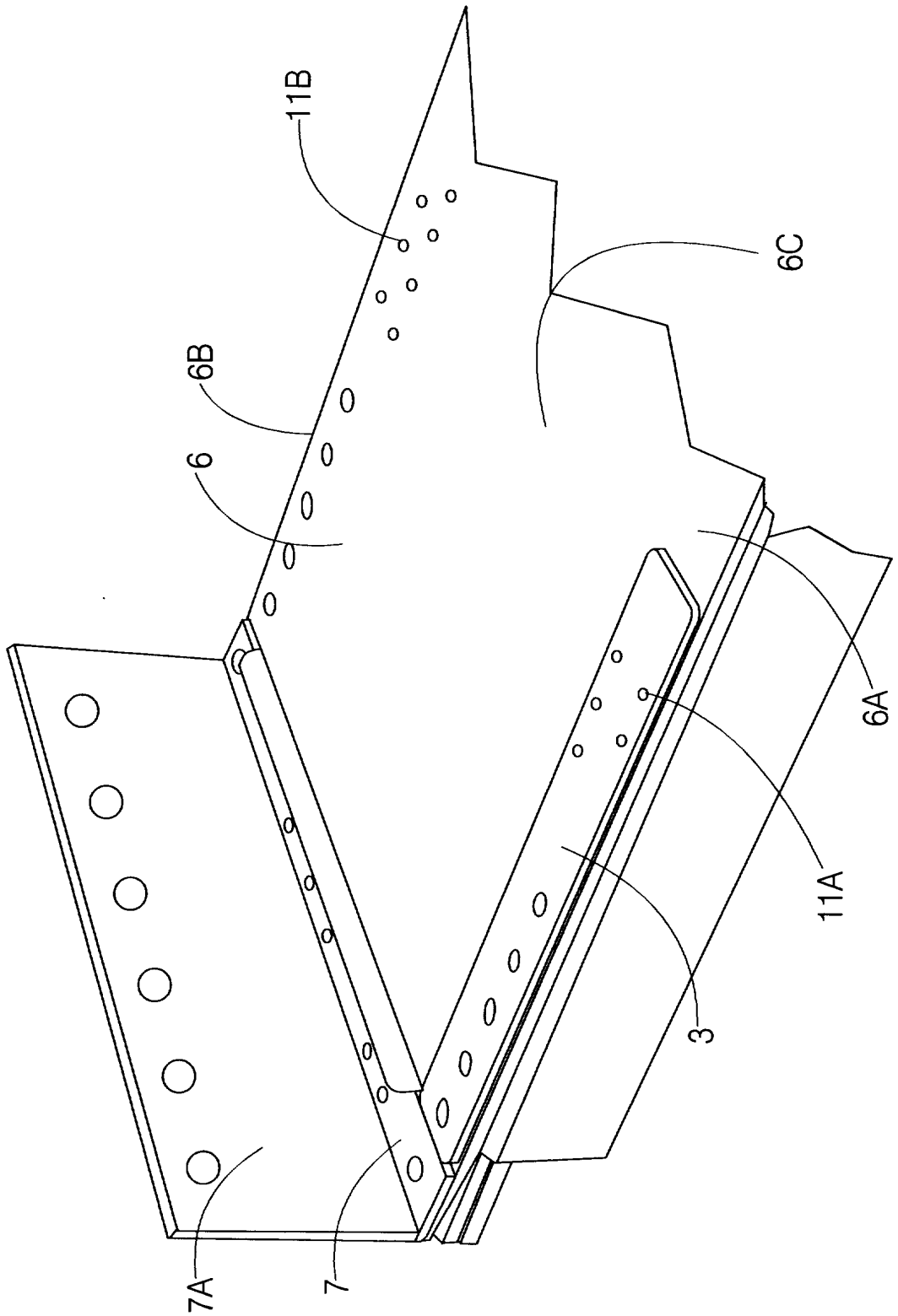

FIG. 5

SCANNED, #____

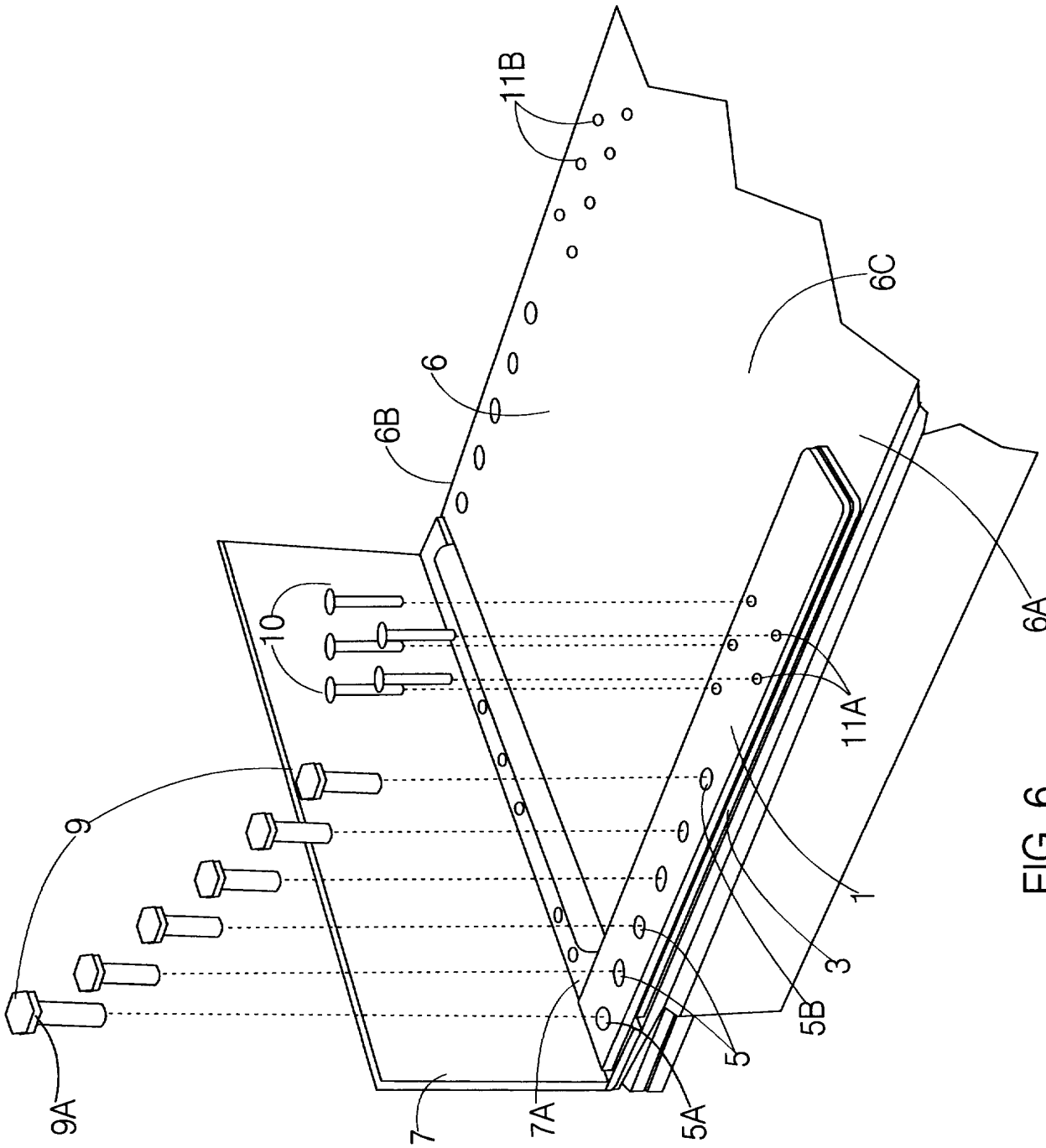

FIG. 6

Please type a plus sign (+) inside this box → [+]

PTO/SB/01 (12-97)
Approved for use through 9/30/00. OMB 0651-0032
Patent and Trademark Office; U.S. DEPARTMENT OF COMMERCE
Under the Paperwork Reduction Act of 1995, no persons are required to respond to a collection of information unless it contains a valid OMB control number.

DECLARATION FOR UTILITY OR DESIGN PATENT APPLICATION (37 CFR 1.63)

☒ Declaration Submitted with Initial Filing OR ☐ Declaration Submitted after Initial Filing (surcharge (37 CFR 1.16 (e)) required)

Attorney Docket Number	00-124
First Named Inventor	Jack M. Tarbox
COMPLETE IF KNOWN	
Application Number	/
Filing Date	
Group Art Unit	
Examiner Name	

As a below named inventor, I hereby declare that:

My residence, post office address, and citizenship are as stated below next to my name.

I believe I am the original, first and sole inventor (if only one name is listed below) or an original, first and joint inventor (if plural names are listed below) of the subject matter which is claimed and for which a patent is sought on the invention entitled:

WING SPAR MODIFICATION KIT

the specification of which

☒ is attached hereto

OR

☐ was filed on (MM/DD/YYYY) [ ] as United States Application Number or PCT International Application Number [ ] and was amended on (MM/DD/YYYY) [ ] (if applicable).

I hereby state that I have reviewed and understand the contents of the above identified specification, including the claims, as amended by any amendment specifically referred to above.

I acknowledge the duty to disclose information which is material to patentability as defined in 37 CFR 1.56.

I hereby claim foreign priority benefits under 35 U.S.C. 119(a)-(d) or 365(b) of any foreign application(s) for patent or inventor's certificate, or 365(a) of any PCT international application which designated at least one country other than the United States of America, listed below and have also identified below, by checking the box, any foreign application for patent or inventor's certificate, or of any PCT international application having a filing date before that of the application on which priority is claimed.

Prior Foreign Application Number(s)	Country	Foreign Filing Date (MM/DD/YYYY)	Priority Not Claimed	Certified Copy Attached? YES	NO
			☐	☐	☐
			☐	☐	☐
			☐	☐	☐
			☐	☐	☐

☐ Additional foreign application numbers are listed on a supplemental priority data sheet PTO/SB/02B attached hereto

I hereby claim the benefit under 35 U.S.C. 119(e) of any United States provisional application(s) listed below.

Application Number(s)	Filing Date (MM/DD/YYYY)	
		☐ Additional provisional application numbers are listed on a supplemental priority data sheet PTO/SB/02B attached hereto

Burden Hour Statement: This form is estimated to take 0.4 hours to complete. Time will vary depending upon the needs of the individual case. Any comments on the amount of time you are required to complete this form should be sent to the Chief Information Officer, Patent and Trademark Office, Washington, DC 20231. DO NOT SEND FEES OR COMPLETED FORMS TO THIS ADDRESS. SEND TO: Assistant Commissioner for Patents, Washington, DC 20231.

Express Mailed on: 10/25/2000
Mailing Label No.: EL291412534US

Please type a plus sign (+) inside this box → [+]

PTO/SB/01 (12-97)
Approved for use through 9/30/00. OMB 0651-0032
Patent and Trademark Office; U.S. DEPARTMENT OF COMMERCE
Under the Paperwork Reduction Act of 1995, no persons are required to respond to a collection of information unless it contains a valid OMB control number.

DECLARATION — Utility or Design Patent Application

I hereby claim the benefit under 35 U.S.C. 120 of any United States application(s), or 365(c) of any PCT international application designating the United States of America, listed below and, insofar as the subject matter of each of the claims of this application is not disclosed in the prior United States or PCT international application in the manner provided by the first paragraph of 35 U.S.C. 112, I acknowledge the duty to disclose information which is material to patentability as defined in 37 CFR 1.56 which became available between the filing date of the prior application and the national or PCT international filing date of this application.

U.S. Parent Application or PCT Parent Number	Parent Filing Date (MM/DD/YYYY)	Parent Patent Number (if applicable)

☐ Additional U.S. or PCT international application numbers are listed on a supplemental priority data sheet PTO/SB/02B attached hereto

As a named inventor, I hereby appoint the following registered practitioner(s) to prosecute this application and to transact all business in the Patent and Trademark Office connected therewith: ☑ Customer Number 24124 → Place Customer Number Bar Code Label 24124
OR
☐ Registered practitioner(s) name/registration number listed below

Name	Registration Number	Name	Registration Number

☐ Additional registered practitioner(s) named on supplemental Registered Practitioner Information sheet PTO/SB/02C attached hereto.

Direct all correspondence to: ☑ Customer Number or Bar Code Label 24124 OR ☐ Correspondence address below

Name					
Address					
Address					
City		State		ZIP	
Country	USA	Telephone		Fax	

I hereby declare that all statements made herein of my own knowledge are true and that all statements made on information and belief are believed to be true; and further that these statements were made with the knowledge that willful false statements and the like so made are punishable by fine or imprisonment, or both, under 18 U.S.C. 1001 and that such willful false statements may jeopardize the validity of the application or any patent issued thereon.

Name of Sole or First Inventor: ☐ A petition has been filed for this unsigned inventor

Given Name (first and middle if any)	Family Name or Surname
Jack M.	Tarbox

Inventor's Signature	Jack M. Tarbox					Date	10/25/00
Residence: City	Sanford	State	ME	Country	USA	Citizenship	USA
Post Office Address	17 Emerson Str.						
Post Office Address							
City	Sanford	State	ME	ZIP	04073	Country	USA

☑ Additional inventors are being named on the 1 supplemental Additional Inventor(s) sheet(s) PTO/SB/02A attached hereto

[Page 2 of 2]

Please type a plus sign (+) inside this box → [+]

PTO/SB/02A (3-97)
Approved for use through 9/30/98. OMB 0651-0032
Patent and Trademark Office; U.S. DEPARTMENT OF COMMERCE

Under the Paperwork Reduction Act of 1995, no persons are required to respond to a collection of information unless it contains a valid OMB control number.

DECLARATION

ADDITIONAL INVENTOR(S)
Supplemental Sheet
Page 1 of 1

Name of Additional Joint Inventor, if any:	☐ A petition has been filed for this unsigned inventor						
Given Name (first and middle [if any])			Family Name or Surname				
Philip J.			Baker				
Inventor's Signature	Philip J. Baker					10/25/00 Date	
Residence: City	Laconia	State NH		Country U.S.A.		Citizenship	U.S.
Post Office Address							
Post Office Address	28 Nestledown Road						
City	Laconia	State NH	ZIP 03246	Country U.S.A.			

Name of Additional Joint Inventor, if any:	☐ A petition has been filed for this unsigned inventor						
Given Name (first and middle [if any])			Family Name or Surname				
Inventor's Signature						Date	
Residence: City		State ME		Country		Citizenship	
Post Office Address							
Post Office Address							
City		State	ZIP		Country		

Name of Additional Joint Inventor, if any:	☐ A petition has been filed for this unsigned inventor						
Given Name (first and middle [if any])			Family Name or Surname				
Inventor's Signature						Date	10/25/00
Residence: City		State		Country U.S.A.		Citizenship	U.S.
Post Office Address							
Post Office Address							
City		State ME	ZIP		Country U.S.A.		

Burden Hour Statement: This form is estimated to take 0.4 hours to complete. Time will vary depending upon the needs of the individual case. Any comments on the amount of time you are required to complete this form should be sent to the Chief Information Officer, Patent and Trademark Office, Washington, DC 20231. DO NOT SEND FEES OR COMPLETED FORMS TO THIS ADDRESS. SEND TO: Assistant Commissioner for Patents, Washington, DC 20231.

Jc917 U.S. PTO
09/696127
10/25/00

ISSUE CLASSIFICATION	Class	Subclass
	244	131

PATENT NUMBER
6328260
6328260

U.S. **UTILITY** Patent Application

O.I.P.E.	PATENT DATE
SCANNED BRO Q.A. JT	DEC [illegible]

APPLICATION NO.	CONT/PRIOR	CLASS	SUBCLASS	ART UNIT	EXAMINER
09/696127		244	131	364	Eldred

APPLICANTS

Please keep w/ 95/000,005.

TITLE

PTO-2040
12/99

BEST AVAILABLE COPY

ISSUING CLASSIFICATION

ORIGINAL		CROSS REFERENCE(S)	
CLASS	SUBCLASS	CLASS	SUBCLASS (ONE SUBCLASS PER BLOCK)
244	131	244	123
INTERNATIONAL CLASSIFICATION			
B64C 1/06			

☐ Continued on Issue Slip Inside File Jacket

10/31/01 Formal Drawings (6 sht/s) rec'd 10/25/00

☐ TERMINAL DISCLAIMER	DRAWINGS			CLAIMS ALLOWED	
	Sheets Drwg.	Figs. Drwg.	Print Fig.	Total Claims	Print Claim for O.G.
	6	7	6	14	1
☐ The term of this patent subsequent to _____ (date) has been disclaimed.	_____ (Assistant Examiner) _____ (Date)			NOTICE OF ALLOWANCE MAILED	
☐ The term of this patent shall not extend beyond the expiration date of U.S Patent. No. _____	J. Woodrow Eldred J. WOODROW ELDRED PRIMARY EXAMINER GROUP 220 (Primary Examiner) _____ (Date)			9/11/01 ISSUE FEE Amount Due: 620	Date Paid: 10-12-01
☐ The terminal ____ months of this patent have been disclaimed.	(Legal Instruments Examiner) 9/14/01 (Date)			ISSUE BATCH NUMBER Z99	

WARNING:
The information disclosed herein may be restricted. Unauthorized disclosure may be prohibited by the United States Code Title 35, Sections 122, 181 and 368. Possession outside the U.S. Patent & Trademark Office is restricted to authorized employees and contractors only.

Form PTO-436A
(Rev. 6/99)

FILED WITH: ☐ DISK (CRF) ☐ FICHE ☐ CD-ROM
(Attached in pocket on right inside flap)

Issue Fee

SEARCHED

Class	Sub.	Date	Exmr.
244	123	4-17-01	JM
	131		
	124		
	117R		
	119		
Update above search		8-5-01	JM

INTERFERENCE SEARCHED

Class	Sub.	Date	Exmr.
all subclasses	above	8-5-01	JM

SEARCH NOTES
(INCLUDING SEARCH STRATEGY)

	Date	Exmr.

BEST AVAILABLE COPY

10

(RIGHT OUTSIDE)

POSITION	INITIALS	ID NO.	DATE
FEE DETERMINATION			
O.I.P.E. CLASSIFIER		59	1/13
FORMALITY REVIEW	EW	JC4949	12/19/11
RESPONSE FORMALITY REVIEW			

INDEX OF CLAIMS

✔ ..... Rejected
= ..... Allowed
— (Through numeral)... Canceled
÷ ..... Restricted
N ..... Non-elected
I ..... Interference
A ..... Appeal
O ..... Objected

Claim Final	Claim Original	Date 12-20-11	Date 12-7-11
1	1	✓	
2	2	✓	
3	3	✓	
4	4	✓	
5	5	✓	
6	6	✓	
7	7	✓	
8	8	✓	
9	9	✓	
10	10	✓	
11	11	✓	
12	12	✓	
13	13	✓	
14	14	✓	
	15		
	16		
	17		
	18		
	19		
	20		
	21		
	22		
	23		
	24		
	25		
	26		
	27		
	28		
	29		
	30		
	31		
	32		
	33		
	34		
	35		
	36		
	37		
	38		
	39		
	40		
	41		
	42		
	43		
	44		
	45		
	46		
	47		
	48		
	49		
	50		

Claim Final	Claim Original	Date
	51	
	52	
	53	
	54	
	55	
	56	
	57	
	58	
	59	
	60	
	61	
	62	
	63	
	64	
	65	
	66	
	67	
	68	
	69	
	70	
	71	
	72	
	73	
	74	
	75	
	76	
	77	
	78	
	79	
	80	
	81	
	82	
	83	
	84	
	85	
	86	
	87	
	88	
	89	
	90	
	91	
	92	
	93	
	94	
	95	
	96	
	97	
	98	
	99	
	100	

Claim Final	Claim Original	Date
	101	
	102	
	103	
	104	
	105	
	106	
	107	
	108	
	109	
	110	
	111	
	112	
	113	
	114	
	115	
	116	
	117	
	118	
	119	
	120	
	121	
	122	
	123	
	124	
	125	
	126	
	127	
	128	
	129	
	130	
	131	
	132	
	133	
	134	
	135	
	136	
	137	
	138	
	139	
	140	
	141	
	142	
	143	
	144	
	145	
	146	
	147	
	148	
	149	
	150	

If more than 150 claims or 10 actions staple additional sheet here

(LEFT INSIDE)

BEST AVAILABLE COPY

10/25/00 Jc928 U.S. PTO
Jc917 U.S. PTO 09/696127 10/26/00

Please type a plus sign (+) inside this box → [+]

PTO/SB/05 (12/97)
Approved for use through 09/30/00. OMB 0651-0032
Patent and Trademark Office: U.S. DEPARTMENT OF COMMERCE
Under the Paperwork Reduction Act of 1995, no persons are required to respond to a collection of information unless it displays a valid OMB control number.

UTILITY PATENT APPLICATION TRANSMITTAL

(Only for new nonprovisional applications under 37 CFR 1.53(b))

Attorney Docket No.	00-124	*Total Pages*	31
First Named Inventor or Application Identifier	TARBOX, Jack M.		
Express Mail Label No.	EL291412534US		

APPLICATION ELEMENTS
See MPEP chapter 600 concerning utility patent application contents.

ADDRESS TO: Assistant Commissioner for Patents, Box Patent Application, Washington, DC 20231

1. [✓] Fee Transmittal Form *(Submit an original, and a duplicate for fee processing)*
2. [✓] Specification [*Total Pages* 14] *(preferred arrangement set forth below)*
   - Descriptive title of the Invention
   - Cross References to Related Applications
   - Statement Regarding Fed sponsored R & D
   - Reference to Microfiche Appendix
   - Background of the Invention
   - Brief Summary of the Invention
   - Brief Description of the Drawings *(if filed)*
   - Detailed Description
   - Claim(s)
   - Abstract of the Disclosure
3. [✓] Drawing(s) *(35 USC 113)* [*Total Sheets* 6]
4. Oath or Declaration [*Total Pages* 3]
   - a. [✓] Newly executed (original or copy)
   - b. [ ] Copy from a prior application (37 CFR 1.63(d)) *(for continuation/divisional with Box 17 completed)* ***[Note Box 5 below]***
     - i. [ ] DELETION OF INVENTOR(S) Signed statement attached deleting inventor(s) named in the prior application, see 37 CFR 1.63(d)(2) and 1.33(b).
5. [ ] Incorporation By Reference *(useable if Box 4b is checked)* The entire disclosure of the prior application, from which a copy of the oath or declaration is supplied under Box 4b, is considered as being part of the disclosure of the accompanying application and is hereby incorporated by reference therein.
6. [ ] Microfiche Computer Program *(Appendix)*
7. Nucleotide and/or Amino Acid Sequence Submission *(if applicable, all necessary)*
   - a. [ ] Computer Readable Copy
   - b. [ ] Paper Copy (identical to computer copy)
   - c. [ ] Statement verifying identity of above copies

ACCOMPANYING APPLICATION PARTS

8. [✓] Assignment Papers (cover sheet & document(s))
9. [ ] 37 CFR 3.73(b) Statement *(when there is an assignee)* [ ] Power of Attorney
10. [ ] English Translation Document *(if applicable)*
11. [✓] Information Disclosure Statement (IDS)/PTO-1449 [✓] Copies of IDS Citations
12. [ ] Preliminary Amendment
13. [✓] Return Receipt Postcard (MPEP 503) *(Should be specifically itemized)*
14. [✓] Small Entity Statement(s) [ ] Statement filed in prior application, Status still proper and desired
15. [ ] Certified Copy of Priority Document(s) *(if foreign priority is claimed)*
16. [ ] Other: .....

17. If a **CONTINUING APPLICATION,** *check appropriate box and supply the requisite information:*
    [ ] Continuation [ ] Divisional [ ] Continuation-in-part (CIP) of prior application No: _____/_____

18. CORRESPONDENCE ADDRESS

[✓] *Customer Number or Bar Code Label* 24124 *(Insert Customer No. or Attach bar code label here)* or [ ] *Correspondence address below*

NAME					
ADDRESS					
CITY		*STATE*		*ZIP CODE*	
COUNTRY		*TELEPHONE*		*FAX*	

Burden Hour Statement: This form is estimated to take 0.2 hours to complete. Time will vary depending upon the needs of the individual case. Any comments on the amount of time you are required to complete this form should be sent to the Chief Information Officer, Patent and Trademark Office, Washington, DC 20231. DO NOT SEND FEES OR COMPLETED FORMS TO THIS ADDRESS. SEND TO: Assistant Commissioner for Patents, Box Patent Application, Washington, DC 20231.

PTO/SB/17 (09-00)
Approved for use through 10/31/2002. OMB 0651-0032
U.S. Patent and Trademark Office; U.S. DEPARTMENT OF COMMERCE
Under the Paperwork Reduction Act of 1995, no persons are required to respond to a collection of information unless it displays a valid OMB control number.

FEE TRANSMITTAL for FY 2001

Patent fees are subject to annual revision.

TOTAL AMOUNT OF PAYMENT ($) 355.00

Complete if Known	
Application Number	
Filing Date	
First Named Inventor	TARBOX, Jack M.
Examiner Name	
Group Art Unit	
Attorney Docket No.	00-124

jc917 U.S. PTO
09/696107
10/25/00

METHOD OF PAYMENT

1. ☐ The Commissioner is hereby authorized to charge indicated fees and credit any overpayments to:

Deposit Account Number: 501517

Deposit Account Name: Thomas L. Bohan & Associates

☑ Charge Any Additional Fee Required Under 37 CFR 1.16 and 1.17

☐ Applicant claims small entity status. See 37 CFR 1.27

2. ☑ **Payment Enclosed:**

☑ Check ☐ Credit card ☐ Money Order ☐ Other

FEE CALCULATION

1. BASIC FILING FEE

Large Entity Fee Code	Large Entity Fee ($)	Small Entity Fee Code	Small Entity Fee ($)	Fee Description	Fee Paid
101	710	201	355	Utility filing fee	
106	320	206	160	Design filing fee	
107	490	207	245	Plant filing fee	
108	710	208	355	Reissue filing fee	
114	150	214	75	Provisional filing fee	

SUBTOTAL (1) ($)

2. EXTRA CLAIM FEES

	Extra Claims		Fee from below	Fee Paid
Total Claims	14 -20** =	X		=
Independent Claims	1 - 3** =	X		=
Multiple Dependent				=

Large Entity Fee Code	Large Entity Fee ($)	Small Entity Fee Code	Small Entity Fee ($)	Fee Description
103	18	203	9	Claims in excess of 20
102	80	202	40	Independent claims in excess of 3
104	270	204	135	Multiple dependent claim, if not paid
109	80	209	40	** Reissue independent claims over original patent
110	18	210	9	** Reissue claims in excess of 20 and over original patent

SUBTOTAL (2) ($) 355.00

**or number previously paid, if greater; For Reissues, see above

FEE CALCULATION (continued)

3. ADDITIONAL FEES

Large Entity Fee Code	Large Entity Fee ($)	Small Entity Fee Code	Small Entity Fee ($)	Fee Description	Fee Paid
105	130	205	65	Surcharge - late filing fee or oath	
127	50	227	25	Surcharge - late provisional filing fee or cover sheet	
139	130	139	130	Non-English specification	
147	2,520	147	2,520	For filing a request for *ex parte* reexamination	
112	920*	112	920*	Requesting publication of SIR prior to Examiner action	
113	1,840*	113	1,840*	Requesting publication of SIR after Examiner action	
115	110	215	55	Extension for reply within first month	
116	390	216	195	Extension for reply within second month	
117	890	217	445	Extension for reply within third month	
118	1,390	218	695	Extension for reply within fourth month	
128	1,890	228	945	Extension for reply within fifth month	
119	310	219	155	Notice of Appeal	
120	310	220	155	Filing a brief in support of an appeal	
121	270	221	135	Request for oral hearing	
138	1,510	138	1,510	Petition to institute a public use proceeding	
140	110	240	55	Petition to revive - unavoidable	
141	1,240	241	620	Petition to revive - unintentional	
142	1,240	242	620	Utility issue fee (or reissue)	
143	440	243	220	Design issue fee	
144	600	244	300	Plant issue fee	
122	130	122	130	Petitions to the Commissioner	
123	50	123	50	Petitions related to provisional applications	
126	240	126	240	Submission of Information Disclosure Stmt	
581	40	581	40	Recording each patent assignment per property (times number of properties)	
146	710	246	355	Filing a submission after final rejection (37 CFR § 1.129(a))	
149	710	249	355	For each additional invention to be examined (37 CFR § 1.129(b))	
179	710	279	355	Request for Continued Examination (RCE)	
169	900	169	900	Request for expedited examination of a design application	

Other fee (specify) _____

* Reduced by Basic Filing Fee Paid

SUBTOTAL (3) ($)

SUBMITTED BY				Complete (if applicable)	
Name (Print/Type)	Patricia M. Mathers	Registration No. (Attorney/Agent)	44,906	Telephone	(207) 773-3132
Signature	Patricia M. Mathers			Date	10/25/2000

WARNING: Information on this form may become public. Credit card information should not be included on this form. Provide credit card information and authorization on PTO-2038.

Burden Hour Statement: This form is estimated to take 0.2 hours to complete. Time will vary depending upon the needs of the individual case. Any comments on the amount of time you are required to complete this form should be sent to the Chief Information Officer, U.S. Patent and Trademark Office, Washington, DC 20231. DO NOT SEND FEES OR COMPLETED FORMS TO THIS ADDRESS. SEND TO: Assistant Commissioner for Patents, Washington, DC 20231.

6328260

SCANNED, #___

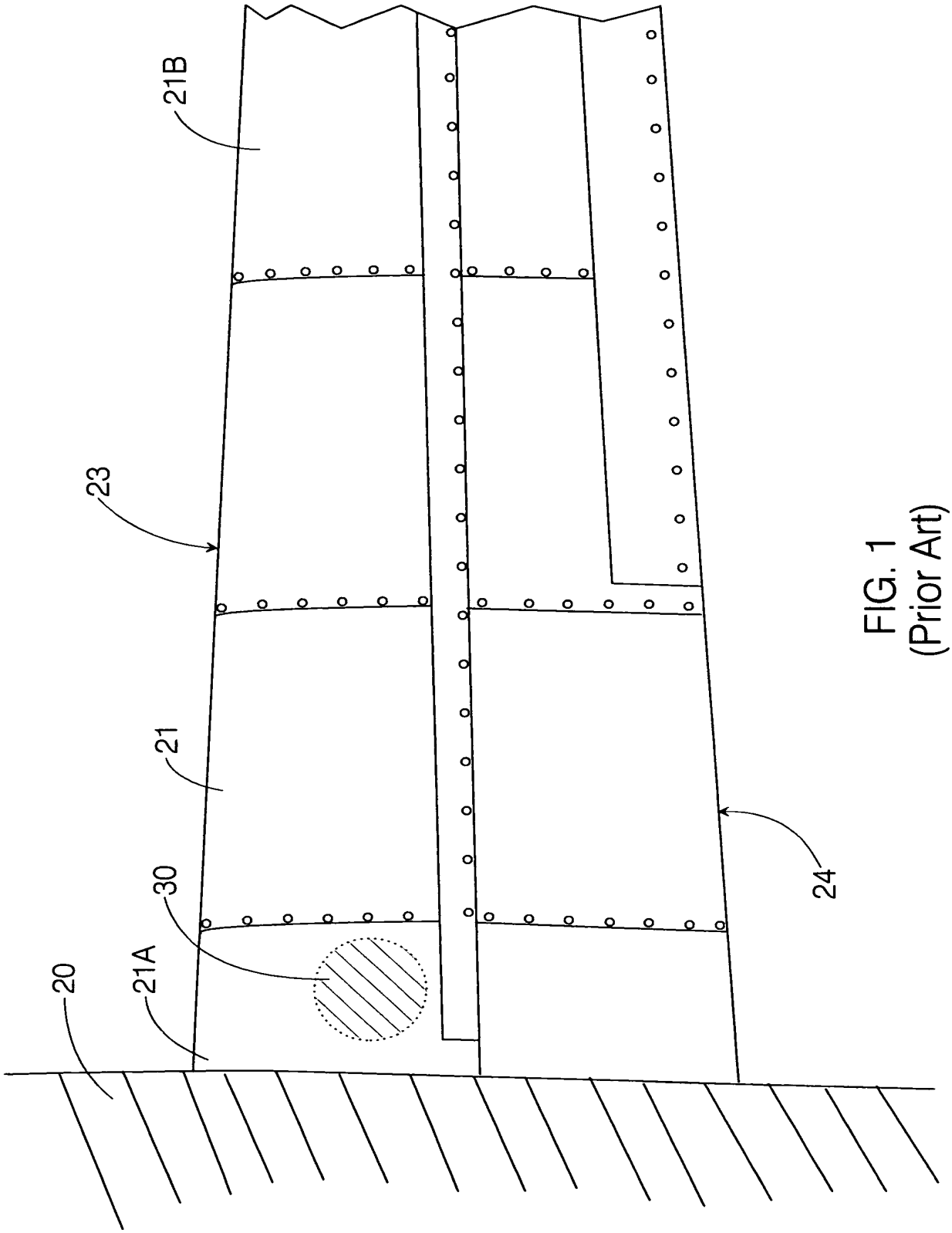

FIG. 1
(Prior Art)

SCANNED, #___

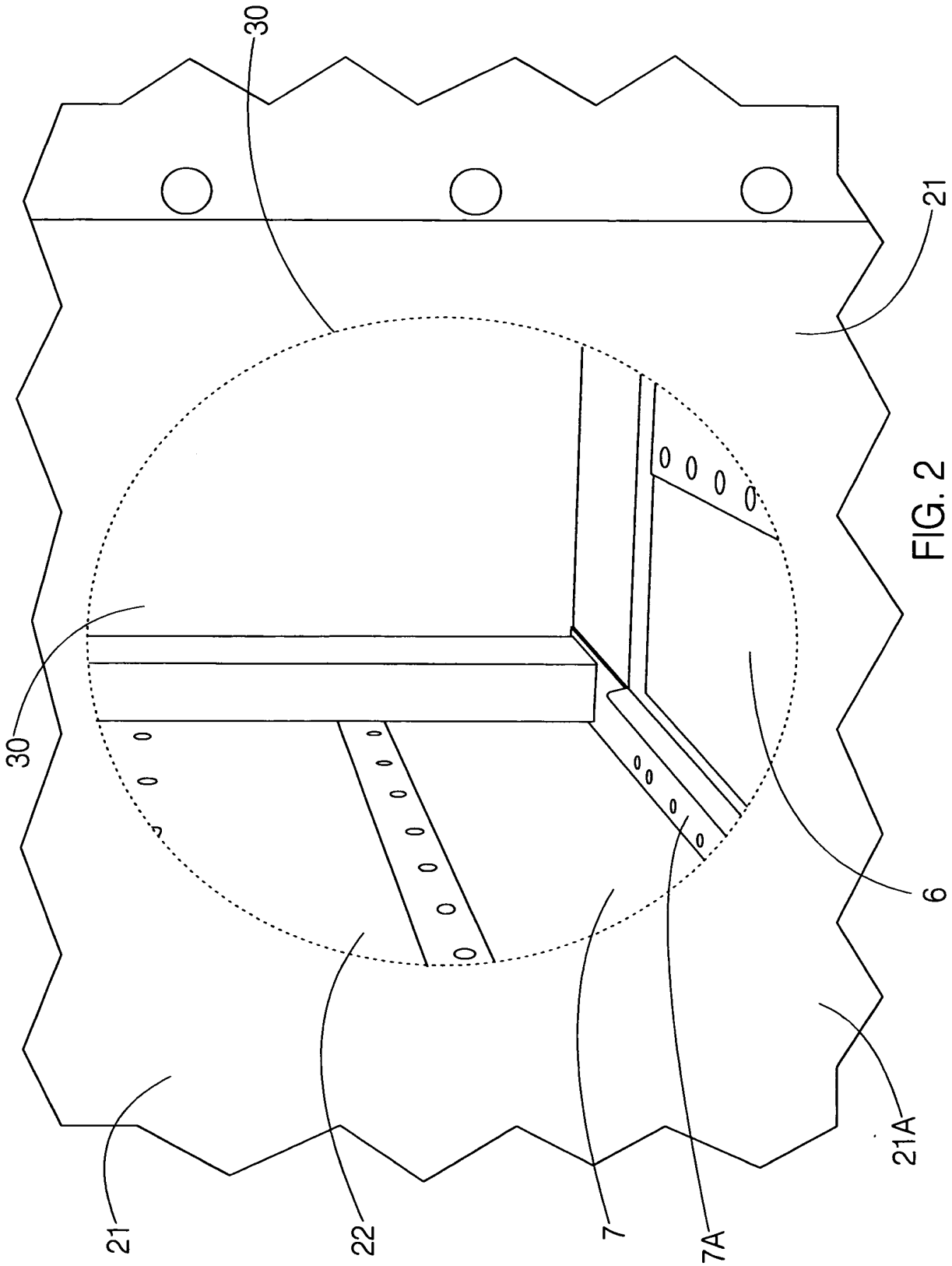

FIG. 2
(Prior Art)

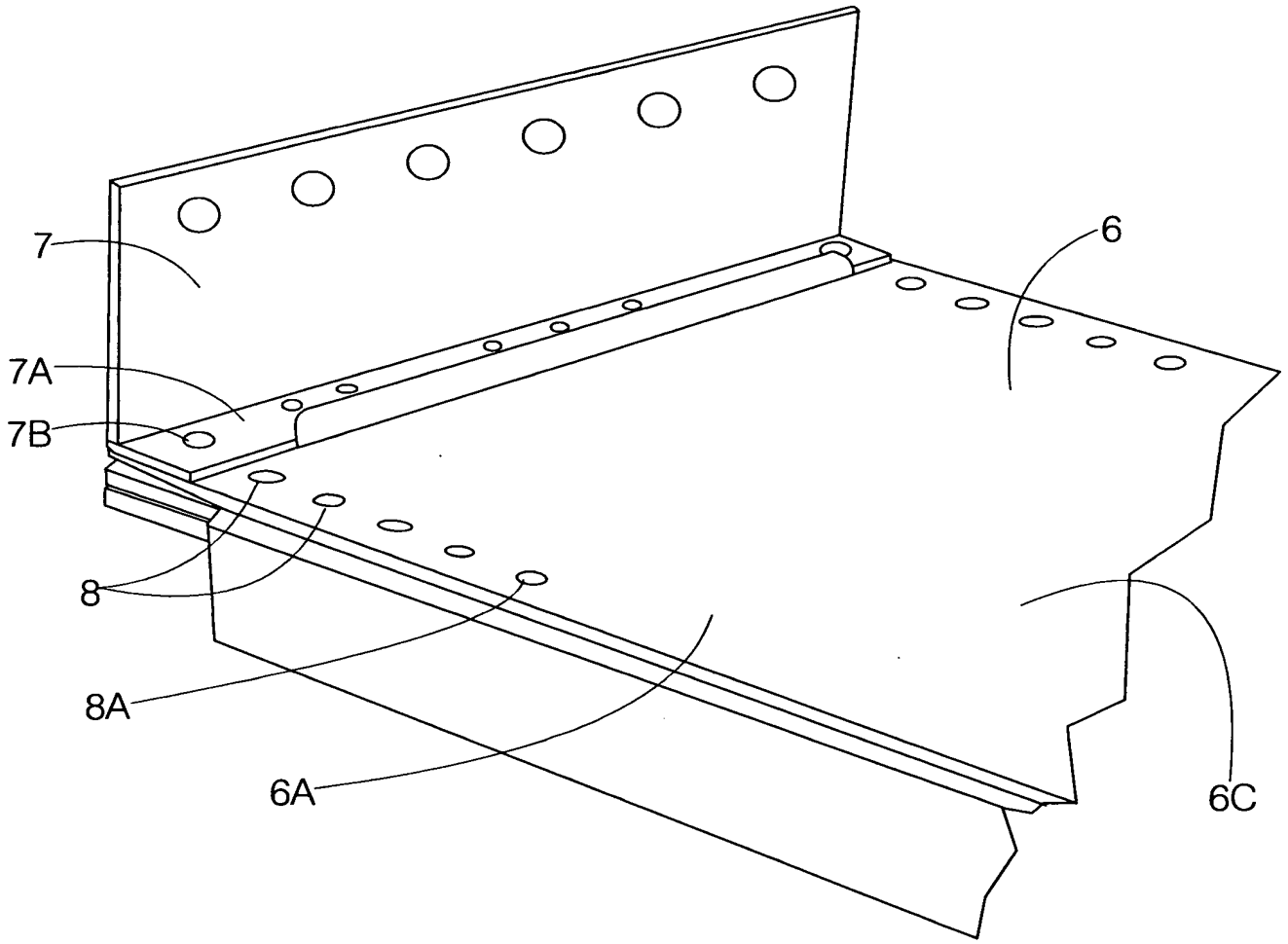

FIG. 3
(Prior Art)

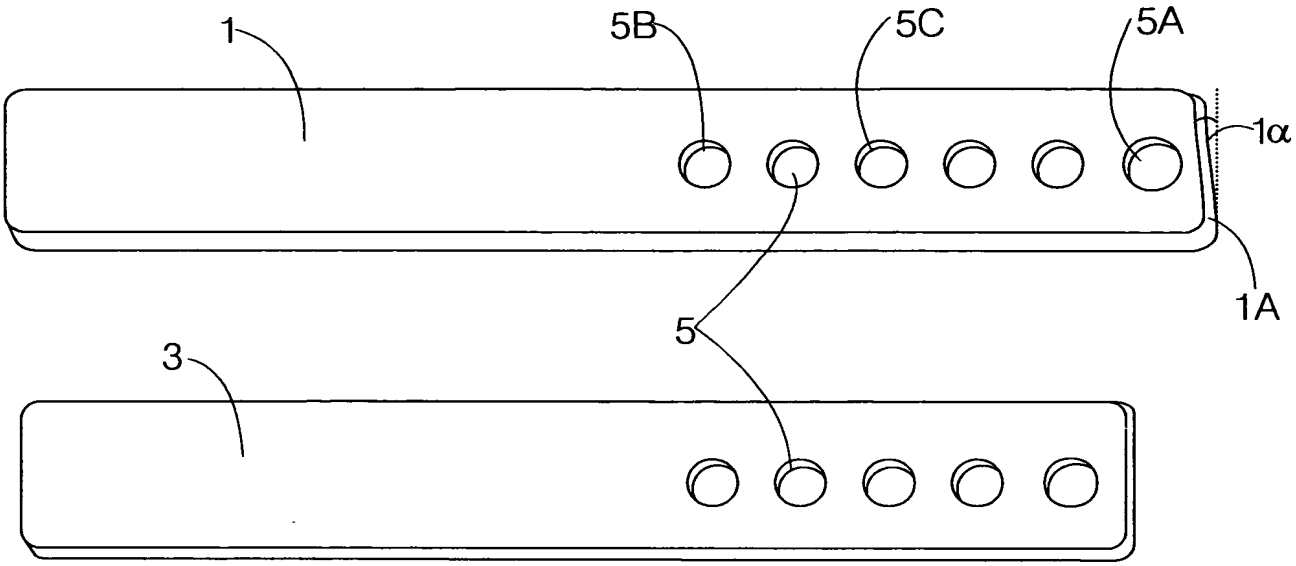

FIG. 4A

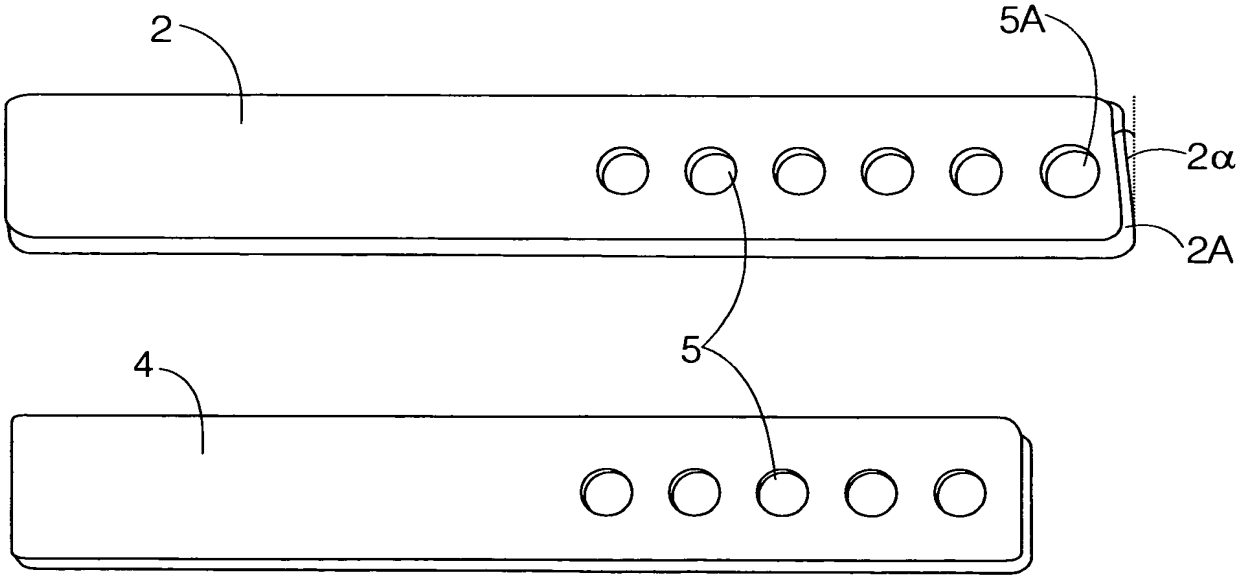

FIG. 4B

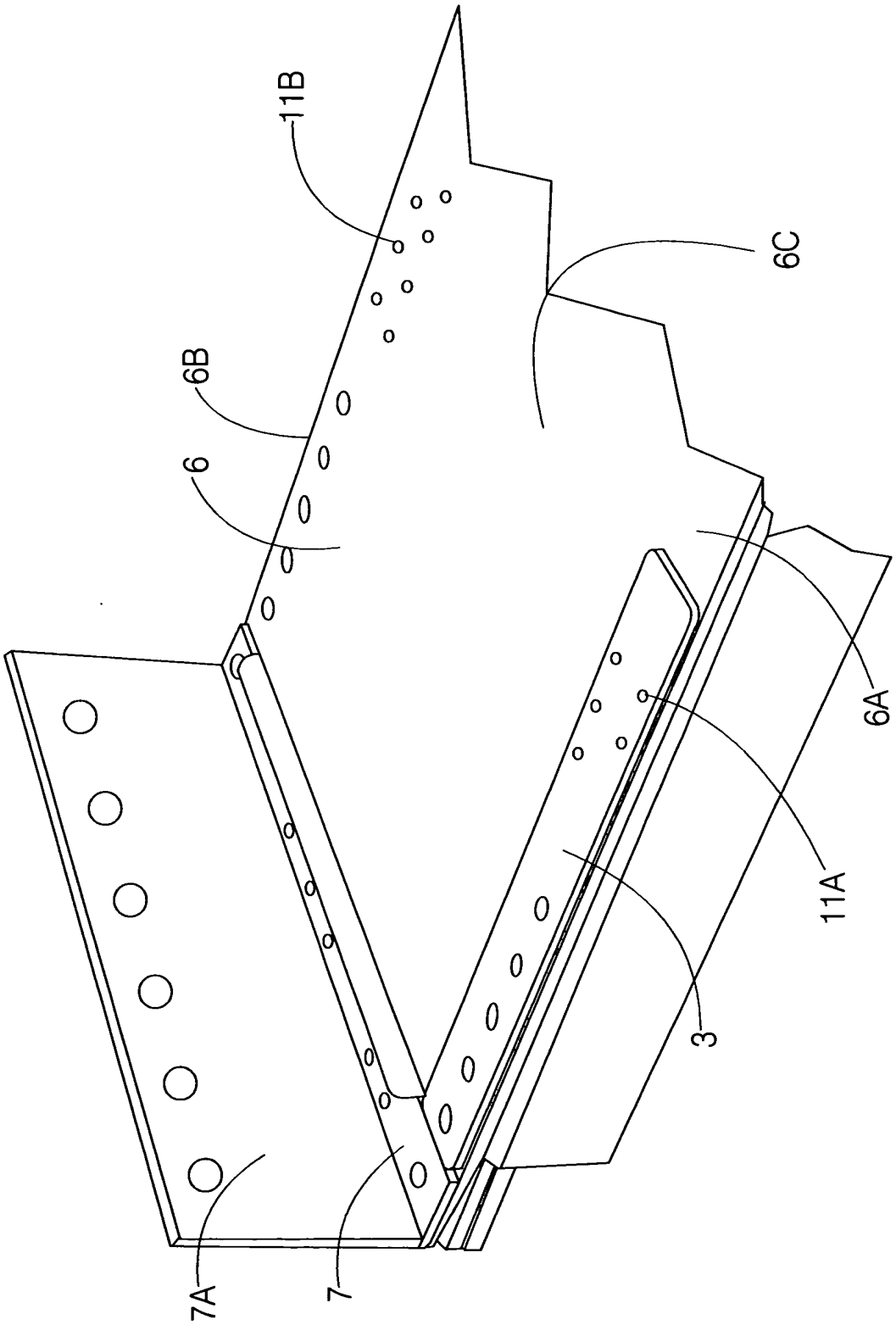

FIG. 5

SCANNED, #___

SCANNED, #____

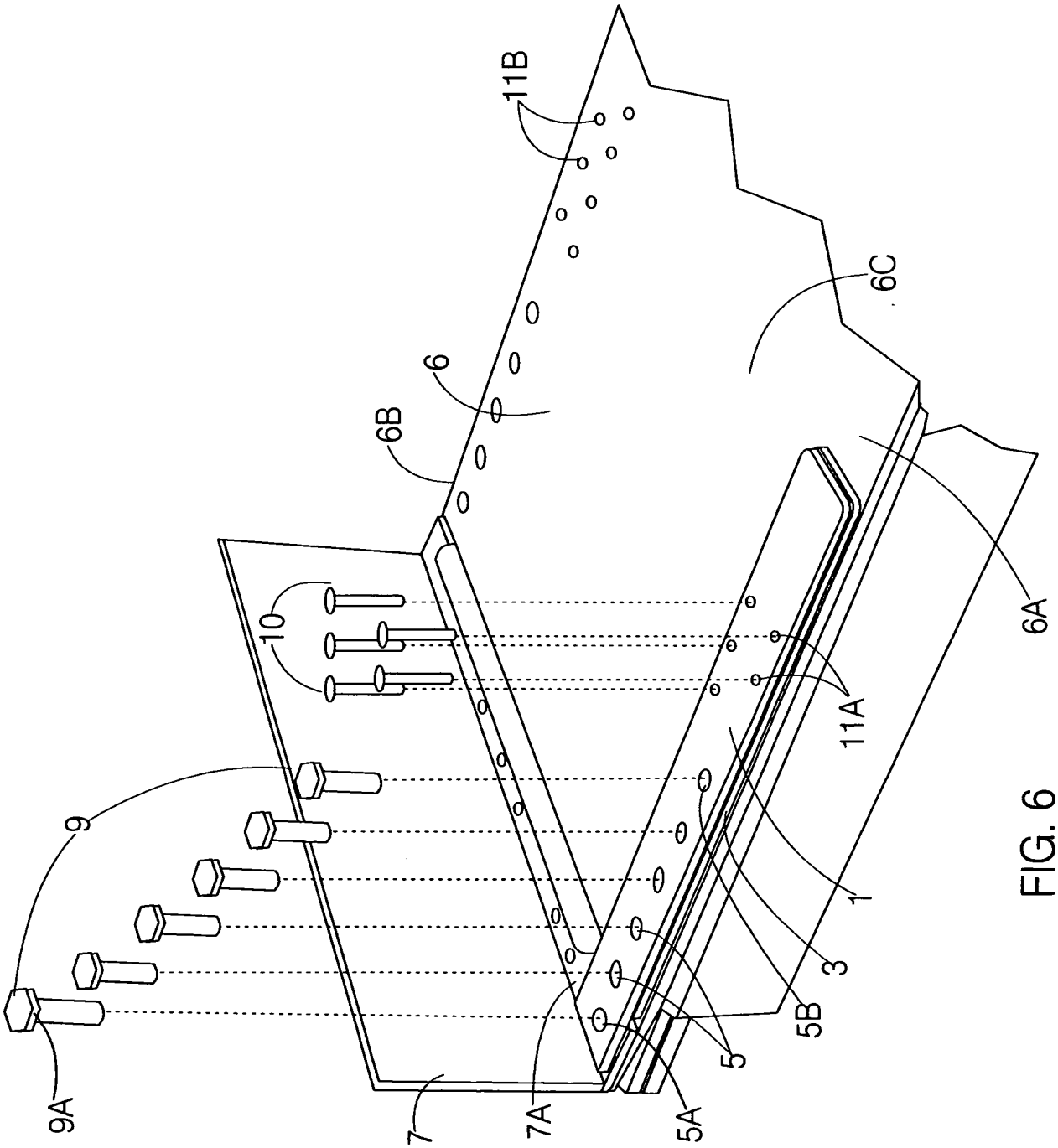

FIG. 6

Wing Spar Modification Kit

BACKGROUND OF THE INVENTION

1. Field of Invention

The invention relates to the field of fixed-wing aircraft. More particularly, the invention relates to the various models of Lake amphibious aircraft, as manufactured by Aerofab, Inc.. More particularly yet, the invention relates to a device for strengthening wing spars on such aircraft.

2. Description of Prior Art

Forces exerted on the wings of aircraft during landing impose stresses on the wing structures. These stresses are even greater on wing structures of amphibious aircraft during water landings because the shock-absorbing devices that are integrated into the landing gear are not available when landing on water. It has been determined that the method of wing spar attachment used in certain Lake amphibious aircraft models may result in cracks in the wing spar, specifically, in the wing spar cap and wing spar attachment bolt-holes. The wing spar serves to attach the wing to the aircraft fuselage and these cracks have the potential to cause separation of the wing from the fuselage during flight, with obvious deleterious consequences.

Due to the seriousness of a wing spar structural failure, the Federal Aviation Administration(FAA) issued an airworthiness directive (AD) for the wing spar on the Lake models of amphibious aircraft, directing that the referenced aircraft be repaired or modified within a specific timeframe in accordance with the AD. The particular problem to be solved was the elimination of the structural deficiencies of the wing attachment due to cracks initiating at a machined notch at the flange termination point of the wing-spar cap angle. One correction proposed was frequent inspection and replacement of the wing-spar cap angle upon the detection of cracks. This solution is, however, very costly and time-consuming — it being a very labor-intensive and time-consuming task to replace parts of the wing spar, with a typical

cost of $40,000. An alternative to that first approach is to physically strengthen the wing spar prophylactically by, for example, adding an additional layer of metal to the vulnerable element.

In the field of aircraft manufacturing, the application of an additional layer of material, commonly called a "doubler," as a means of reinforcing a structural component is well known. For example, **Cox (U.S. Pat. No. 4,984,347)** describes a means of attaching a doubler to the damaged skin of an airplane as a means of reinforcing the damaged area. **Welch et al. (U.S. Pat. No. 5,975,237)** describes the use of a doubler for the purpose of reinforcing an acoustic panel for installation in the nacelle of a jet engine. Although both of these doubler inventions serve to strengthen aircraft elements, neither provides a solution to the specific problem at hand, which is not as straightforward as slapping more metal on the spar.

When using a doubler to modify a primary structural element, it is critical that the strength and rigidity properties of the doubler and the structural element complement each other. For example, a doubler-strap that is too rigid or has greater strength than the underlying element may itself cause stresses on the element and introduce additional sources of cracking and structural weakness. Conversely, a doubler-strap that is too flexible or has less strength than the underlying element will not provide the additional strength and reinforcement that is required. Without access to comprehensive engineering data on the components to be strengthened and on its related flight elements, it can be very difficult to determine the proper strength characteristics required in a doubler without having to carry out a lengthy testing process that may also include destructive tests and, consequently, be very costly because of the material costs.

A further difficulty in constructing a doubler-strap modification kit to solve the particular problem at hand is that there are a number of different aircraft models with wing spars that required strengthening, with dimensions of the area requiring strengthening varying with model, and to a lesser extent any individual plans of a particular model. It is desirable for obvious economic and safety reasons to have a strap that could be installed on all aircraft units requiring treatment.

Another factor that must be taken into account in developing a doubler as a means of structural reinforcement of a wing spar is the problem of corrosion. In order to serve its intended purpose, the wing-spar doubler must be resistant to any corrosion that could lead to structural weakness. This becomes a critical issue with amphibious planes, the wings of which may be expected to be regularly exposed to salt water to a degree not found in the non-amphibious planes that make up the vast majority of the world's aircraft. Salt water heightens the electro-voltaic effect that is present whenever dissimilar metals are in contact with one another.

Finally, as a safety issue, as well as an economic issue, the doubler reinforcement must be simple to install. Preferably, the doubler should be able to be installed using standard tools that are readily available at airplane maintenance facilities, and not require special skills beyond those of ordinary airplane maintenance personnel. In addition, it must be easily determinable upon a simple post-installation inspection that the doubler has been properly installed.

What is needed, therefore, is a cost-efficient effective means of strengthening the wing spars on all models of Lake aircraft. What is further needed is a modification that can be retrofitted to any model of Lake aircraft, properly and easily, with a minimum of disassembly and without causing collateral damage to other installed parts. What is yet further needed is such a modification that will provide a long-term solution to the wing spar cracking problem, that will not cause additional structural problems, and that is corrosion-resistant in a sea water environment and not subject to harmful electro-voltaic effects.

SUMMARY OF THE INVENTION

It is an object of the present invention to provide a simple-to-install doubler modification kit for strengthening the wing spar on Lake aircraft models. It is a yet further object of the invention to provide such a kit that will strengthen the wing spar for the service life of the aircraft, without introducing additional structural problems.

These objects have been achieved in the present invention by providing a doubler-strap modification kit comprising an upper and a lower doubler-strap of specific configuration and constitutions, a filler-strap for each doubler-strap, and a plurality of bolts, rivets, nuts, and washers to attach the doubler-straps to the wing spar. The wing spar on the aircraft comprises a wing spar web and two wing-spar cap angles, one on each side of the in-board end of the web. Each doubler-strap and filler-strap has a series of bolt-holes that corresponds precisely to the pattern of wing attach bolt-holes in the Lake wing spar web. The holes in the doubler and filler-straps are drilled with the same drilling fixture used to drill the holes in the wing spar itself so as to achieve a very high degree of precision with the same size for all matching holes. Each doubler-strap also has an additional bolt-hole on the inboard end of the strap that corresponds to a bolt-hole on the wing-spar cap angle.

Ins. a1

~~The filler-strap is an additional layer of material that is used to compensate for any~~ differences in dimension between the surfaces of the wing spar web and the wing-spar cap angle along which the doubler-strap is to be installed. When installed, the filler-strap of the present invention — which also has a series of bolt-holes that precisely match the respective pattern of holes in the wing spar web — lies flat along the edge of and in direct contact with the wing spar web; the doubler-strap is placed on top of the filler so that it lies flat along and in direct contact with the filler and extends onto and lies flat against the wing-spar cap angle. When the bolt-holes in the wing spar web, filler-strap, cap angle, and doubler-strap are ~~properly aligned, the doubler-strap is bolted and riveted to the wing spar web and cap angle.~~

A filler-strap may be made of a material different from that of the doubler, for reasons of cost-effectiveness or for structural reasons. In the present invention, the web spar web is made of aluminum, so the filler-strap is also made of aluminum, to eliminate the danger of corrosion on the web spar resulting from contact between dissimilar metals. The doubler-strap, is made of steel for structural reasons. Direct contact between the aluminum filler-strap and the steel doubler-strap, however, introduces the risk of corrosion on these two parts, thereby exacerbating concerns of prolonged structural integrity. To counter this problem, the doubler-strap is coated with a protective coating, either Midrofin Allseal or preferably SermeTel ® 5380DP, and the filler-straps are coated with an alodine conversion coating and

then a primer coat. This effectively eliminates direct contact between the dissimilar metals, and, furthermore, decreases the risk of corrosion arising from salt water environments. Furthermore, the aluminum filler-strap, which is more easily replaceable than the doubler-strap, will corrode before the doubler-strap.

In order to construct a doubler-strap that could be used on all Lake model aircraft, the engineering data and drawings — including change orders generated over the past 50 years — and the results of various structural and fatigue analyses conducted on the aircraft wings were studied to determine the doubler-strap material and dimensions required to provide the needed wing-spar strengthening. A main difficulty was determining the proper dimensions to ensure a single-size doubler would fit all aircraft. In the course of solving the problem, it was determined that the initial doubler-strap prototype was too short and, although it would have solved the initial cracking problem on the wing-spar cap angle and would have satisfied the universality condition, was likely to cause additional cracking on the wing spar web in the area around the first outboard wing-attach bolt-hole. To solve this problem, the doubler and filler-straps were lengthened so as to extend further in the outboard direction and the minimum size of rivets used to attach the straps to the wing spar between the first outboard wing attach bolt and the outboard end of the strap, in addition to the bolts in the wing attach bolt-holes, was increased to AD6.

Further, it was determined that a single rectangular shape was inappropriate, since it was introducing additional and parasitic stresses onto the wing-spar cap angle. The wing spar is attached to a root rib that is then attached to the airplane body. The root rib is tipped outward relative to a central vertical plane of the aircraft, *i.e.*, the upper inboard edge of the wing is farther from the central vertical plane than is the lower inboard edge of the wing, and the inboard end of the wing spar is angled correspondingly. In order to ensure that the doubler-strap does not push against the wing-spar cap angle and introduce new stresses, the inboard end of the doubler-strap of the present invention is angled to correspond to the angle of the wing spar. Because this angled inboard end introduced a directionality, the modification kit had to be provided as a right-wing kit and a left-wing kit. It was discovered that the filler and doubler-straps could be installed incorrectly, resulting in an interference between the

doubler-strap and the wing-spar cap angle that was almost impossible to perceive because the intervention is most readily discernible when the straps are being laid in place and ascess to the area for visual inspection is effectively blocked by the arm of the person installing the parts. Once the parts are in place and the visual inspection is possible, the interference is effectively hidden from view. Although the interference was minor, it could have serious effects in the longterm on the airworthiness of the aircraft. In order to ensure that the doubler-strap is installed correctly, the right wing and left wing doubler and filler-straps are given part numbers that identify the parts as right wing or left wing parts. The particular part number is stamped on the "face forward" side of the strap, *i.e.*, the side that faces toward the person installing the strap. Assembly instructions instruct that the part number must be legible on the forward side of the wing spar by the person installing the strap for the part to be installed correctly.

BRIEF DESCRIPTION OF THE DRAWINGS

FIG. 1 is a partial view of a wing attached to the fuselage of an airplane (prior art), showing the location of the access hole for retrofitting a doubler kit according to the present invention on a wing spar.

FIG. 2 shows a perspective view of the inboard end of the wing spar (prior art) as viewed through the access hole.

FIG. 3 shows a perspective view of the inboard end of an isolated wing spar (prior art), with the side of the wing spar that faces the leading edge of the wing facing up.

FIG. 4A shows the upper doubler-strap and upper filler-strap of the present invention.

FIG. 4B shows the lower doubler-strap and lower filler-strap of the present invention.

FIG. 5 shows the isolated wing spar shown in **FIG. 3**, with the upper filler-strap of the Preferred Embodiment of the present invention in place for installation and rivet holes drilled through the wing-spar web **6**.

FIG. 6 shows a perspective view of the isolated wing spar with the upper filler-strap and upper doubler-strap of the present invention in place, showing bolts and rivets reading for insertion.

DETAILED DESCRIPTION OF THE PREFERRED EMBODIMENT OF THE INVENTION

FIG. 1 shows a partial view of a wing **21** attached to a fuselage **20** of an airplane that is indicated only schematically. The wing **21** has an inboard end **21A**, *i.e.*, the end of the wing **21** attached to the fuselage **20**, an outboard end **21B**, a leading edge **23**, and a trailing edge **24**. The wing **21** shown here is merely representative of those assembled in the models of the Lake amphibious aircraft, and is not intended to illustrate details of the shape or formation of the wing. Also shown in this view is an access hole **30**, which provides access to some internal wing components at the inboard end **21A** of the wing**21**.

FIG. 2 is a perspective view through the access hole **30**, showing wing components as viewed when the line of sight is into the access hole **30** and skewed slightly toward the inboard end **21A** and the trailing edge **24** of the wing. Visible is an inboard end of a wing spar assembly comprising a wing-spar web **6** and a wing-spar cap angle **7**. The cap angle **7** has a flange **7A** that rests on the inboard end **21A** of the wing-spar web **6** and is bolted to the wing-spar web **6** and a root rib **22**.

FIG. 3 shows a perspective view of an isolated wing spar assembly. A face forward side **6C**, *i.e.*, the side of the web **6** that faces toward the leading edge of the wing, is shown. The wing-spar web **6** has an upper web edge **6A** and a lower web edge **6B**. Located on the

respective upper and lower web edges **6A, 6B** are five $^{3}/_{8}$" wing-attach bolt-holes **8**, including a first outboard wing attach bolt-hole **8A**. A $^{7}/_{16}$" flange bolt-hole **7B** is provided through the cap angle flange **7A** and at a matching location beneath the flange **7A** through the wing-spar web **6**.

FIG 4A shows elements of the Preferred Embodiment of the present invention: a lower doubler-strap **1**, and a lower filler-strap **3**; **FIG. 4B** shows an upper doubler-strap **2** and an upper filler-strap **4**, also according to the Preferred Embodiment. As can be seen, wing-attach bolt-holes **5** are provided in each of the doubler-straps **1, 2** and the filler-straps **3, 4**. These wing-attach bolt-holes **5** correspond in size and alignment to the wing-attach bolt-holes **8** through the wing-spar web **6**, shown in **FIG 3**. A cap-angle bolt-hole **5A** is provided through an inboard end **1A** of the upper doubler-strap **1** and also through an inboard end **2A** of the lower doubler-strap **2**. These cap-angle bolt-holes **5A** corresponds in size and alignment to the flange bolt-hole **7B** on the respective end of the cap angle **7**.

The upper and lower doubler-straps **1, 2** are constructed to fit all models of Lake aircraft. Thus, for example, all lower doubler-straps **1** have the same lower-strap width, length, and thickness dimensions, regardless of which airplane model they are to fit, and all upper doubler-straps **2** have the same upper-strap width, length, and thickness dimensions. The lower filler-straps **3** and the upper filler-straps **4**, on the other hand, have a thickness dimension that depends on the particular model of aircraft, or rather, the particular wing model, into which they are to be installed. In the Preferred Embodiment, both doubler-straps **1, 2** are made of 4340 steel and heat treated to 180,000 psi, and have a thickness of approximately $^{3}/_{16}$". The approximate overall dimensions of the lower doubler-strap **1** are 9 ½" by 1¼", and those of the upper doubler-strap **2** are 8 $^{49}/_{64}$" by 1¼". The approximate overall dimensions of the lower filler-strap **1** are 8 $^{7}/_{16}$" by 1¼" and those of the upper filler-strap **2** are 7 $^{49}/_{64}$" by 1¼".

In the Preferred Embodiment, each of the filler-straps **3, 4** is made of 2024-T3 aluminum and treated with an alodine conversion coating, and then painted with a coating of epoxy primer to protect against corrosion. Each of the doubler-straps **1, 2** is treated with a

SermeTel ® coating protecting them from corrosion arising from electro voltaic effects (contact of dissimilar metals) and/or from exposure to a sea water environment. The inner walls of the bolt-holes **5, 5A, 7B,** and **8**, as illustrated by way of example by bolt-hole inner-wall **5C** in **FIG 1**, are not coated, so as to maintain the tight tolerances called for. These holes are close-tolerance wing-attach bolt-holes with tolerances of +0.003 inch and are plugged during the coating processes to prevent the coating being applied to the inner walls.

As can be seen in **FIGS. 4A** and **4B**, the inboard end **1A** of the lower doubler-strap **1** has an inboard-end angle **1α** and the inboard end **2A** of the upper doubler-strap **2** has an inboard-end angle **2α**. In the Preferred Embodiment the inboard-end angle **1α** on the lower doubler-strap **1** is approximately 6° and the inboard-end angle **2α** on the upper doubler-strap **2** is approximately 5°. These angles correspond with the angle of the cap-angle flange **7A** relative to the length dimension of the wing-spar web **6**, so that the lower doubler-strap **1** and the upper doubler-strap **2** can fit against or close to the cap angle **7** without causing additional stress to the cap angle **7** or other wing components as a result of undue force applied by the respective doubler-strap **1, 2**. As can be seen in **FIG. 3**, the cap-angle flange **7A** exists on the face forward side **6C** of the wing spar web **6** and, therefore, the cap angle **7** and the wing spar web **6** together do not provide a flat surface on which to place the doubler-straps **1, 2**. **FIG. 5** shows the upper filler-strap **3** in place for installation on the upper edge **6A** of the wing spar, as well as an upper series of rivet holes **11A** and a lower series of rivet holes **11B** that have been drilled through the wing-spar web **6** and the corresponding filler-strap.

A Preferred Embodiment of the modification kit includes the lower doubler-strap **1** and the upper doubler-strap **2**, the lower filler-strap **3** and the upper filler-strap **4** for the particular aircraft, a plurality of wing-attach bolts **9** and a cap angle bolt **9A**, a plurality of AD 6-22 rivets **10**, and a plurality of nuts and washers (not shown) to secure the bolts. **FIG. 6** shows the same assembly as shown in **FIG 5**, with the upper doubler-strap **1** placed along the upper filler-strap **3** and on the cap-angle flange **7A**. As mentioned above, the root rib **22** of the aircraft is tipped outward so that an upper end of the rib **22** is farther from a central longitudinal axis of the airplane than is a lower end of the rib **22**. Thus, the upper edge **6A** of the wing spar web **6** is shorter than the lower edge **6B**. For this reason, the upper series of

rivet holes **11A** has five holes and the lower series of rivet holes **11B** has seven holes, as illustrated in **FIG. 5**. Both the upper and lower series of rivet holes **11A, 11B** are drilled through the wing-spar web **6**, the respective upper or lower filler-straps **3, 4** and doubler-straps **1, 2** during the retrofitting or installation process — preferably by clamping or fastening the filler-straps **3, 4** onto the respective upper or lower edge of the wing spar web **6** and then back-drilling through the wing spar web **6** *through* the filler-straps **3, 4**. The filler-straps **3, 4** are then removed from the wing spar web **6** and the locations of the rivet holes **11** in the particular left-wing or right-wing, upper or lower filler-strap **3, 4** carefully transferred to the respective right-wing or left-wing, lower doubler-strap **1** or upper doubler-strap **2** and the upper and lower series of rivet holes **11A, 11B** drilled accordingly through the respective upper doubler-strap **2** and lower doubler-strap **1**.

The lower doubler-strap **1**, upper doubler-strap **2**, lower filler-strap **3**, and upper filler strap **4** are printed with a part number on the "face forward" side of the respective part, so that when the part is oriented for installation on the face forward side **6C** of the wing spar web **6**, the part number is readily visible to the the person installing the straps. This ensures that a left-hand or right-hand modification kit is properly installed on the wing spar.

The embodiment mentioned herein is merely illustrative of the present invention. It should be understood that variations in construction and installation of the present invention may be contemplated in view of the following claims without straying from the intended scope and field of the invention herein disclosed.

What is claimed is:

1. A modification kit for retrofitting a wing spar on a Lake model amphibious airplane, said airplane having a root rib, and said wing spar comprising a wing-spar cap angle that is attached to a wing spar web, said wing spar web having an upper edge and a lower edge and an inboard end that attaches to said root rib, a first series of wing-attach bolt-holes that is provided in said upper edge and a second series of wing-attach bolt-holes that is provided in said lower edge of said wing spar web, wherein said root rib is angled relative to a vertical plane of said Lake model amphibious airplane, and wherein said inboard end of said wing spar has an inboard-end angle that corresponds to an angle of said root rib, said modification kit comprising:

an upper doubler-strap and an upper filler-strap;

a lower doubler-strap and a lower filler-strap; and

a plurality of wing-spar attachment-bolts;

wherein each said upper filler-strap and each said upper doubler-strap have a third series of wing-attach bolt-holes that corresponds precisely with a first series of wing-attach bolt-holes in an upper edge of a wing spar web, and said lower filler-strap and said lower doubler-strap have a fourth series of wing-attach bolt-holes that corresponds precisely with a second series of wing-attach bolt-holes in a lower edge of said wing spar;

wherein said upper and said lower doubler-straps have a doubler-protective-coating and said upper and said lower filler-straps have a filler-protective-coating, and

wherein said upper doubler-strap has an upper inboard-end angle and said lower doubler-strap has a lower inboard end angle.

2. The kit of Claim **1**, wherein said upper and said lower doubler-straps are made of 4340 steel.

3. The kit of Claim **2**, wherein said upper and said lower doubler-straps are heat-treated to 180,000 psi.

4. The kit of Claim **1**, wherein said upper and said lower filler-straps are made of 2024-T3 aluminum.

5. The kit of Claim **1**, wherein said upper inboard-end angle on said upper doubler-strap is approximately 5°.

6. The kit of Claim **1**, wherein said lower inboard-end angle on said lower doubler-strap is approximately 6°.

7. The kit of Claim **1**, ~~wherein said doubler-protective-coating is a SermeTel® protective~~ coating.

8. The kit of Claim **1**, wherein said filler-protective-coating includes a first coating that is an alodine conversion coating and a second coating that is an epoxy primer.

9. The kit of Claim **1**, wherein each bolt-hole of said third and fourth series of said wing-attach bolt-holes in said upper doubler-strap, said lower doubler-strap, said upper filler-strap, and said lower filler-strap is free of said doubler- protective-coating and of said filler-protective-coating.

10. The kit of Claim **1**, wherein said first and said second series of wing-attach bolt-holes in said wing spar web is a series of five wing-attach bolt-holes and wherein said wing-spar cap angle has a flange with at least an upper wing-attach bolt-hole and a lower wing-attach bolt-hole, and wherein each of said third and fourth series of wing-attach bolt-holes in said upper doubler-strap and said lower doubler-strap, respectively, includes a series of five bolt-holes that align with said five wing-attach bolt-holes in said wing spar web and a cap-angle flange bolt-hole at said strap inboard end that aligns with said upper wing attach bolt-hole in said cap angle, and wherein each of said third and fourth series of bolt-holes in said upper filler-strap and said lower filler-strap, respectively, is a series of five bolt-holes that align respectively with said five wing-attach bolt-holes in said upper edge and said lower edge of said wing spar web.

11. The kit of Claim **8**, wherein said wing spar web has a first series of rivet holes on said upper edge and a second series of rivet holes on said lower edge, and said upper doubler-strap and said upper filler-strap each have a series of rivet holes that corresponds to said first series of rivet holes and said lower doubler-strap and said lower filler-strap each have a series of rivet holes that corresponds to said second series of rivet holes.

12. The kit of Claim **9**, wherein said upper doubler-strap and said upper filler-strap each have a series of five rivet holes and said lower doubler-strap and said lower filler-strap each have a series of seven rivet holes.

13. The kit of Claim **1**, further comprising a plurality of wing-attach bolts, a plurality of cap angle bolts, a corresponding plurality of nuts and washers for said wing-attach bolts and said cap angle bolts, and a plurality of rivets.

14. The kit of Claim **13**, wherein said plurality of wing-attach bolts includes ten NAS 464 6A24 bolts, said plurality of cap-angle bolts includes two NAS 464-7A24 bolts, said plurality of nuts and washers includes two AN 364-720 nuts, ten AN 364-624 nuts, four AN 960-716 washers and twenty AN960-616 washers, and said plurality of rivets includes twelve AN-470-AD6-22 rivets.

add a4

ABSTRACT

A kit for reinforcing the wing spar attachment of Lake models of amphibious airplanes. The kit includes two filler-straps and two doubler-straps for each wing spar, and the necessary bolts, rivets, washers and nuts to attach the straps to the wing spar web. The doubler-straps are constructed to fit all models of Lake amphibious airplanes; the thickness of the filler-straps is, however, specific to the model of airplane or the model of wing in which they are to be installed. The doubler-straps and the filler-straps are pre-treated to protect them against corrosion and are marked so as to preclude incorrect inspection. The inboard end of the doubler-strap is angled to correspond to the angle of the wing spar relative to a vertical plane of the airplane.

Please type a plus sign (+) inside this box → ☒

PTO/SB/01 (12-97)
Approved for use through 9/30/00. OMB 0651-0032
Patent and Trademark Office; U.S. DEPARTMENT OF COMMERCE
Under the Paperwork Reduction Act of 1995, no persons are required to respond to a collection of information unless it contains a valid OMB control number.

DECLARATION FOR UTILITY OR DESIGN PATENT APPLICATION (37 CFR 1.63)

☒ Declaration Submitted with Initial Filing OR ☐ Declaration Submitted after Initial Filing (surcharge (37 CFR 1.16 (e)) required)

Attorney Docket Number	00-124
First Named Inventor	Jack M. Tarbox
COMPLETE IF KNOWN	
Application Number	/
Filing Date	
Group Art Unit	
Examiner Name	

As a below named inventor, I hereby declare that:

My residence, post office address, and citizenship are as stated below next to my name.

I believe I am the original, first and sole inventor (if only one name is listed below) or an original, first and joint inventor (if plural names are listed below) of the subject matter which is claimed and for which a patent is sought on the invention entitled:

WING SPAR MODIFICATION KIT

the specification of which

☑ is attached hereto

OR

☐ was filed on (MM/DD/YYYY) [ ] as United States Application Number or PCT International Application Number [ ] and was amended on (MM/DD/YYYY) [ ] (if applicable).

I hereby state that I have reviewed and understand the contents of the above identified specification, including the claims, as amended by any amendment specifically referred to above.

I acknowledge the duty to disclose information which is material to patentability as defined in 37 CFR 1.56.

I hereby claim foreign priority benefits under 35 U.S.C. 119(a)-(d) or 365(b) of any foreign application(s) for patent or inventor's certificate, or 365(a) of any PCT international application which designated at least one country other than the United States of America, listed below and have also identified below, by checking the box, any foreign application for patent or inventor's certificate, or of any PCT international application having a filing date before that of the application on which priority is claimed.

Prior Foreign Application Number(s)	Country	Foreign Filing Date (MM/DD/YYYY)	Priority Not Claimed	Certified Copy Attached? YES	NO
			☐	☐	☐
			☐	☐	☐
			☐	☐	☐
			☐	☐	☐

☐ Additional foreign application numbers are listed on a supplemental priority data sheet PTO/SB/02B attached hereto:

I hereby claim the benefit under 35 U.S.C. 119(e) of any United States provisional application(s) listed below.

Application Number(s)	Filing Date (MM/DD/YYYY)	
		☐ Additional provisional application numbers are listed on a supplemental priority data sheet PTO/SB/02B attached hereto.

Burden Hour Statement: This form is estimated to take 0.4 hours to complete. Time will vary depending upon the needs of the individual case. Any comments on the amount of time you are required to complete this form should be sent to the Chief Information Officer, Patent and Trademark Office, Washington, DC 20231. DO NOT SEND FEES OR COMPLETED FORMS TO THIS ADDRESS. SEND TO: Assistant Commissioner for Patents, Washington, DC 20231.

Express Mailed on: 10/25/2000
Mailing Label No.: EL291412534US

Please type a plus sign (+) inside this box → [+]

PTO/SB/01 (12-97)
Approved for use through 9/30/00. OMB 0651-0032
Patent and Trademark Office; U.S. DEPARTMENT OF COMMERCE
Under the Paperwork Reduction Act of 1995, no persons are required to respond to a collection of information unless it contains a valid OMB control number.

DECLARATION — Utility or Design Patent Application

I hereby claim the benefit under 35 U.S.C. 120 of any United States application(s), or 365(c) of any PCT international application designating the United States of America, listed below and, insofar as the subject matter of each of the claims of this application is not disclosed in the prior United States or PCT International application in the manner provided by the first paragraph of 35 U.S.C. 112, I acknowledge the duty to disclose information which is material to patentability as defined in 37 CFR 1.56 which became available between the filing date of the prior application and the national or PCT international filing date of this application.

U.S. Parent Application or PCT Parent Number	Parent Filing Date (MM/DD/YYYY)	Parent Patent Number (if applicable)

☐ Additional U.S. or PCT International application numbers are listed on a supplemental priority data sheet PT[redacted]

As a named inventor, I hereby appoint the following registered practitioner(s) to prosecute this application and to [illegible] and Trademark Office connected therewith:

☑ Customer Number 24124 → 24124
OR
☐ Registered practitioner(s) name/registration number listed below

Name	Registration Number	Name	Registration Number

☐ Additional registered practitioner(s) named on supplemental Registered Practitioner Information sheet PTO/SB/02C attached hereto.

Direct all correspondence to: ☑ Customer Number or Bar Code Label 24124 OR ☐ Correspondence address below

Name					
Address					
Address					
City		State		ZIP	
Country	USA	Telephone		Fax	

I hereby declare that all statements made herein of my own knowledge are true and that all statements made on information and belief are believed to be true; and further that these statements were made with the knowledge that willful false statements and the like so made are punishable by fine or imprisonment, or both, under 18 U.S.C. 1001 and that such willful false statements may jeopardize the validity of the application or any patent issued thereon.

Name of Sole or First Inventor: ☐ A petition has been filed for this unsigned inventor

Given Name (first and middle (if any))	Family Name or Surname
Jack M.	Tarbox

Inventor's Signature	Jack M. Tarbox					Date	10/25/00
Residence: City	Sanford	State	ME	Country	USA	Citizenship	USA
Post Office Address	17 Emerson Str.						
Post Office Address							
City	Sanford	State	ME	ZIP	04073	Country	USA

☑ Additional inventors are being named on the 1 supplemental Additional Inventor(s) sheet(s) PTO/SB/02A attached hereto

[Page 2 of 2]

Please type a plus sign (+) inside this box → [+]

PTO/SB/02A (3-97)
Approved for use through 9/30/98. OMB 0651-0032
Patent and Trademark Office; U.S. DEPARTMENT OF COMMERCE

Under the Paperwork Reduction Act of 1995, no persons are required to respond to a collection of information unless it contains a valid OMB control number.

DECLARATION

ADDITIONAL INVENTOR(S)
Supplemental Sheet
Page 1 of 1

Name of Additional Joint Inventor, if any:	☐ A petition has been filed for this unsigned inventor						
Given Name (first and middle [if any])			Family Name or Surname				
Philip J.			Baker				
Inventor's Signature	Philip J. Baker					Date	10/25/00
Residence: City	Laconia	State	NH	Country	U.S.A.	Citizenship	U.S.
Post Office Address							
Post Office Address	28 Nestledown Road						
City	Laconia	State	NH	ZIP	03246	Country	U.S.A.

Name of Additional Joint Inventor, if any:	☐ A petition has been filed for this unsigned inventor						
Given Name (first and middle [if any])			*Family Name or Surname*				
Inventor's Signature						Date	
Residence: City		State	ME	Country		Citizenship	
Post Office Address							
Post Office Address							
City		State		ZIP		Country	

Name of Additional Joint Inventor, if any:	☐ A petition has been filed for this unsigned inventor						
Given Name (first and middle [if any])			Family Name or Surname				
Inventor's Signature						Date	10/25/00
Residence: City		State		Country	U.S.A.	Citizenship	U.S.
Post Office Address							
Post Office Address							
City		State	ME	ZIP		Country	U.S.A.

Burden Hour Statement: This form is estimated to take 0.4 hours to complete. Time will vary depending upon the needs of the individual case. Any comments on the amount of time you are required to complete this form should be sent to the Chief Information Officer, Patent and Trademark Office, Washington, DC 20231. DO NOT SEND FEES OR COMPLETED FORMS TO THIS ADDRESS. SEND TO: Assistant Commissioner for Patents, Washington, DC 20231.

PTO/SB/09 (12-97)
Approved for use through 9/30/00. OMB 0651-0031
Patent and Trademark Office: U.S. DEPARTMENT OF COMMERCE
Under the Paperwork Reduction Act of 1995, no persons are required to respond to a collection of information unless it displays a valid OMB control number.

STATEMENT CLAIMING SMALL ENTITY STATUS (37 CFR 1.9(f) & 1.27(b))--INDEPENDENT INVENTOR	Docket Number (Optional) 00-124

Applicant, Patentee, or Identifier: JACK M. TARBOX

Application or Patent No.:

Filed or Issued:

Title: WING SPAR MODIFICATION KIT

As a below named inventor, I hereby state that I qualify as an independent inventor as defined in 37 CFR 1.9(c) for purposes of paying reduced fees to the Patent and Trademark Office described in:

- [x] the specification filed herewith with title as listed above.
- [ ] the application identified above.
- [ ] the patent identified above.

I have not assigned, granted, conveyed, or licensed, and am under no obligation under contract or law to assign, grant, convey, or license, any rights in the invention to any person who would not qualify as an independent inventor under 37 CFR 1.9(c) if that person had made the invention, or to any concern which would not qualify as a small business concern under 37 CFR 1.9(d) or a nonprofit organization under 37 CFR 1.9(e).

Each person, concern, or organization to which I have assigned, granted, conveyed, or licensed or am under an obligation under contract or law to assign, grant, convey, or license any rights in the invention is listed below:

- [x] No such person, concern, or organization exists.
- [ ] Each such person, concern, or organization is listed below.

Separate statements are required from each named person, concern, or organization having rights to the invention stating their status as small entities. (37 CFR 1.27)

I acknowledge the duty to file, in this application or patent, notification of any change in status resulting in loss of entitlement to small entity status prior to paying, or at the time of paying, the earliest of the issue fee or any maintenance fee due after the date on which status as a small entity is no longer appropriate. (37 CFR 1.28(b))

JACK M. TARBOX	PHILIP J. BAKER	
NAME OF INVENTOR	NAME OF INVENTOR	NAME OF INVENTOR
Jack M. Tarbox	Philip J. Baker	
Signature of inventor	Signature of inventor	Signature of inventor
10/24/00	10-24-00	
Date	Date	Date

Burden Hour Statement: This form is estimated to take 0.2 hours to complete. Time will vary depending upon the needs of the individual case. Any comments on the amount of time you are required to complete this form should be sent to the Chief Information Officer, Patent and Trademark Office, Washington, DC 20231. DO NOT SEND FEES OR COMPLETED FORMS TO THIS ADDRESS. SEND TO: Assistant Commissioner for Patents, Washington, DC 20231.

Express Mailed on: 10/25/2000
Mailing Label No.: EL291425340US

UNITED STATES PATENT AND TRADEMARK OFFICE

COMMISSIONER FOR PATENTS
UNITED STATES PATENT AND TRADEMARK OFFICE
WASHINGTON, D.C. 20231
www.uspto.gov

Bib Data Sheet

SERIAL NUMBER	FILING DATE	CLASS	GROUP ART UNIT	ATTORNEY DOCKET NO.
09/696,127	10/25/2000 RULE _	244	3641	00-124

APPLICANTS

Jack M. Tarbox, Sanford, ME ;
Philip J. Baker, Laconia, NH ;

** CONTINUING DATA ********** None

** FOREIGN APPLICATIONS ********** None

** SMALL ENTITY **

Foreign Priority claimed	STATE OR COUNTRY	SHEETS DRAWING	TOTAL CLAIMS	INDEPENDENT CLAIMS
☐ yes ☒ no	ME	6	14	1
35 USC 119 (a-d) conditions met ☐ yes ☒ no ☐ Met after Allowance				
Verified and Acknowledged Examiner's Signature Initials				

ADDRESS

24124

TITLE

Wing spar modification kit

FILING FEE RECEIVED		
355	FEES: Authority has been given in Paper No. _____ to charge/credit DEPOSIT ACCOUNT No. _____ for following:	☐ All Fees ☐ 1.16 Fees (Filing) ☐ 1.17 Fees (Processing Ext. of time) ☐ 1.18 Fees (Issue) ☐ Other _____ ☐ Credit

PATENT APPLICATION SERIAL NO. _____

U.S. DEPARTMENT OF COMMERCE
PATENT AND TRADEMARK OFFICE
FEE RECORD SHEET

10/30/2000 NROCHA1 00000009 09696127
01 FC:201 355.00 OP

PTO-1556
(5/87)

*U.S. GPO: 1999-459-082/19144

Application or Docket Number

PATENT APPLICATION FEE DETERMINATION RECORD
Effective October 1, 2000

CLAIMS AS FILED - PART I

	(Column 1)	(Column 2)
TOTAL CLAIMS	14	
FOR	NUMBER FILED	NUMBER EXTRA
TOTAL CHARGEABLE CLAIMS	14 minus 20=	* 0
INDEPENDENT CLAIMS	1 minus 3 =	* 0
MULTIPLE DEPENDENT CLAIM PRESENT		☐

* If the difference in column 1 is less than zero, enter "0" in column 2

SMALL ENTITY TYPE ☐		OR	OTHER THAN SMALL ENTITY	
RATE	FEE		RATE	FEE
BASIC FEE	355.00	OR	BASIC FEE	710.00
X$ 9=		OR	X$18=	
X40=		OR	X80=	
+135=		OR	+270=	
TOTAL	355	OR	TOTAL	

CLAIMS AS AMENDED - PART II

AMENDMENT A

	(Column 1) CLAIMS REMAINING AFTER AMENDMENT		(Column 2) HIGHEST NUMBER PREVIOUSLY PAID FOR	(Column 3) PRESENT EXTRA
Total	*	Minus	**	=
Independent	*	Minus	***	=
FIRST PRESENTATION OF MULTIPLE DEPENDENT CLAIM				☐

SMALL ENTITY		OR	OTHER THAN SMALL ENTITY	
RATE	ADDITIONAL FEE		RATE	ADDITIONAL FEE
X$ 9=		OR	X$18=	
X40=		OR	X80=	
+135=		OR	+270=	
TOTAL ADDIT. FEE		OR	TOTAL ADDIT. FEE	

AMENDMENT B

	(Column 1) CLAIMS REMAINING AFTER AMENDMENT		(Column 2) HIGHEST NUMBER PREVIOUSLY PAID FOR	(Column 3) PRESENT EXTRA
Total	*	Minus	**	=
Independent	*	Minus	***	=
FIRST PRESENTATION OF MULTIPLE DEPENDENT CLAIM				☐

RATE	ADDITIONAL FEE		RATE	ADDITIONAL FEE
X$ 9=		OR	X$18=	
X40=		OR	X80=	
+135=		OR	+270=	
TOTAL ADDIT. FEE		OR	TOTAL ADDIT. FEE	

AMENDMENT C

	(Column 1) CLAIMS REMAINING AFTER AMENDMENT		(Column 2) HIGHEST NUMBER PREVIOUSLY PAID FOR	(Column 3) PRESENT EXTRA
Total	*	Minus	**	=
Independent	*	Minus	***	=
FIRST PRESENTATION OF MULTIPLE DEPENDENT CLAIM				☐

RATE	ADDITIONAL FEE		RATE	ADDITIONAL FEE
X$ 9=		OR	X$18=	
X40=		OR	X80=	
+135=		OR	+270=	
TOTAL ADDIT. FEE		OR	TOTAL ADDIT. FEE	

* If the entry in column 1 is less than the entry in column 2, write "0" in column 3.
** If the "Highest Number Previously Paid For" IN THIS SPACE is less than 20, enter "20."
***If the "Highest Number Previously Paid For" IN THIS SPACE is less than 3, enter "3."
The "Highest Number Previously Paid For" (Total or Independent) is the highest number found in the appropriate box in column 1.

FORM PTO-875
(Rev. 8/00)

Patent and Trademark Office, U.S. DEPARTMENT OF COMMERCE

Please type a plus sign (+) inside this box → [+]

PTO/SB/08A (10-96)
Approved for use through 10/31/99. OMB 0651-0031
Patent and Trademark Office: U.S. DEPARTMENT OF COMMERCE

Under the Paperwork Reduction Act of 1995, no persons are required to respond to a collection of information unless it contains a valid OMB control number.

Substitute for form 1449A/PTO

INFORMATION DISCLOSURE STATEMENT BY APPLICANT

(use as many sheets as necessary)

Sheet 1 of 1

Complete if Known	
Application Number	
Filing Date	
First Named Inventor	TARBOX, Jack M.
Group Art Unit	
Examiner Name	
Attorney Docket Number	00-124

09/696127 10/25/00

U.S. PATENT DOCUMENTS

Class / Sub

Examiner Initials*	Cite No.[1]	U.S. Patent Document Number	Kind Code[2] (if known)	Name of Patentee or Applicant of Cited Document	Date of Publication of Cited Document MM-DD-YYYY	Pages, Columns, Lines, Where Relevant Passages or Relevant Figures Appear
	1	4,984,347		Cox	01-15-1991	29/402.06
	2	5,975,237		Welch, et al.	11-02-1999	181/290

FOREIGN PATENT DOCUMENTS

Examiner Initials*	Cite No.[1]	Foreign Patent Document Office[3]	Number[4]	Kind Code[5] (if known)	Name of Patentee or Applicant of Cited Document	Date of Publication of Cited Document MM-DD-YYYY	Pages, Columns, Lines, Where Relevant Passages or Relevant Figures Appear	T[6]

Examiner Signature	Woodrow Eldred	Date Considered	4-20-01

*EXAMINER: Initial if reference considered, whether or not citation is in conformance with MPEP 609. Draw line through citation if not in conformance and not considered. Include copy of this form with next communication to applicant.

[1] Unique citation designation number. [2] See attached Kinds of U.S. Patent Documents. [3] Enter Office that issued the document, by the two-letter code (WIPO Standard ST.3). [4] For Japanese patent documents, the indication of the year of the reign of the Emperor must precede the serial number of the patent document. [5] Kind of document by the appropriate symbols as indicated on the document under WIPO Standard ST. 16 if possible. [6] Applicant is to place a check mark here if English language Translation is attached.

Burden Hour Statement: This form is estimated to take 2.0 hours to complete. Time will vary depending upon the needs of the individual case. Any comments on the amount of time you are required to complete this form should be sent to the Chief Information Officer, Patent and Trademark Office, Washington, DC 20231. DO NOT SEND FEES OR COMPLETED FORMS TO THIS ADDRESS. SEND TO: Assistant Commissioner for Patents, Washington, DC 20231.

Express Mailed on: 10/25/2000
Mailing Label No.: EL291412534US