UNITED STATES DISTRICT COURT
FOR THE MIDDLE DISTRICT OF FLORIDA
ORLANDO DIVISION

CORRECT CRAFT IP HOLDINGS, LLC,
a Florida limited liability company,

Plaintiff,

vs.

CASE NO. 6:09cv813- Orl -28KRS

MALIBU BOATS, LLC, a Delaware limited liability company; and **DANMARK INTERNATIONAL, INC.**, d/b/a **CENTRAL FLORIDA BOATING CENTER,** a Florida corporation,

Defendants.

_____

AND RELATED COUNTERCLAIMS.
_____/

DEFENDANTS' OPPOSITION TO COUNTERDEFENDANTS' MOTION TO DISMISS COUNTERCLAIM AND REQUEST FOR ORAL HEARING

Defendants Malibu Boats, LLC and Danmark International, Inc. (collectively, "Malibu") hereby oppose Counterdefendants Correct Craft IP Holdings, LLC and Correct Craft, Inc.'s (collectively, "Correct Craft") Motion to Dismiss Counterclaim and submit a supporting Declaration of Douglas G. Muehlhauser.

I. INTRODUCTION

This litigation has just begun, and Malibu has already discovered a widespread pattern of fraud to obtain the Correct Craft patents at issue in this suit. In painstaking detail, Malibu has carefully pleaded numerous categories of inequitable conduct, and unmistakably pointed out the facts that establish who committed the inequitable conduct, what were the material misrepresentations and omissions, and when, where and how the deceitful conduct

was manifest. Taken as true, the pleaded allegations without question state a claim for relief that the patents-in-suit are unenforceable.

Correct Craft argues that inequitable conduct appears in every patent case and has become a plague. But Correct Craft could not cite even one case or find authority of any kind that supports dismissal of inequitable conduct when a pattern of fraud so widespread has been pleaded in such extraordinary and informative detail as Malibu has done here. Indeed, Correct Craft cannot credibly maintain that Malibu's pleading does not identify each of the numerous misrepresentations made to the Patent Office, who made them, when and where they were made, and how they were material and deceitful.

Correct Craft relies upon inflammatory and indignant tones and insupportable accusations to mask the analytical shortcomings of its positions. And while pretending the inequitable conduct count is frivolous, Correct Craft fails to inform the Court of the dire warnings it received just this year from the Federal Circuit regarding its inequitable conduct. When its unjustified invective is set aside, it becomes clear that Correct Craft has no substantive argument and that its Motion is a hopeless bid to avoid litigating its inequitable conduct. Malibu's counts easily surpass the pleading standards and this Court should therefore deny the Motion in its entirety.

II. A PLEADING NEED ONLY STATE A PLAUSIBLE CLAIM FOR RELIEF

Motions to dismiss are disfavored because they avoid resolution of claims on the merits. *Quality Foods de Centro Am. v. Latin Am. Agribusiness Dev. Corp.*, 711 F.2d 989, 995 (11th Cir. 1983). On this Motion, the Court must accept Malibu's pleaded facts as true and must construe the pleadings liberally in Malibu's favor. *Id.* at 994–95. After doing so,

the Court should deny dismissal as long as Malibu has pleaded some set of facts that state a claim for relief. Fed. R. Civ. P. 12(b)(6); *Bell Atl. Corp. v. Twombly*, 550 U.S. 544, 554–63 (2007). While every one of the bases Malibu pleaded for each count surpasses this standard, they do not all need to: each count survives dismissal as long as just one set of facts forms a basis for relief. *Tyco Healthcare Group LP v. E-Z-EM, Inc.*, No. 2:07-CV-262, 2009 U.S. Dist. LEXIS 85104, *7–8 (E.D. Tex. Sept. 17, 2009) (inequitable conduct count did not rely solely on one basis; other allegations, if true, would plausibly support the claim).

III. MALIBU HAS PLEADED NUMEROUS SETS OF FACTS, EACH OF WHICH INDEPENDENTLY SUPPORTS ITS INEQUITABLE CONDUCT COUNT

Malibu has uncovered a widespread pattern of deceptive conduct practiced by the individuals who obtained the patents-in-suit.[1] Under settled law, their acts constitute numerous instances of inequitable conduct. The severity of the inequitable conduct prompted Malibu, over two months ago, to voluntarily share with Correct Craft's CEO a draft of its pleading laying out the many bases for inequitable conduct, and to explore early resolution. Muehlhauser Decl. ¶¶ 2–7, Exs. 1–5. To facilitate a settlement meeting, Malibu promised Correct Craft it would remove from its initial pleading that was soon to be filed any factual allegations of inequitable conduct. *Id.* When it became clear that the settlement effort would not be fruitful at this stage, Malibu filed its First Amended Answer and Counterclaim including the inequitable conduct allegations. Although Correct Craft has had possession of the allegations for many weeks, it never once told Malibu that there was anything unclear about the inequitable conduct or the numerous factual underpinnings.

[1] The six patents-in-suit are: U.S. Patents RE37,823, (reissue of Patent 5,979,350); 6,666,159; 6,044,788; 6,192,819; 6,374,762; 7,299,761 ("the '823, '350, '159, '788, '819, '762, '761 patents"). Complaint ¶¶ 7–27.

Correct Craft well knows that Malibu, as promised, filed its initial pleading without factual allegations of inequitable conduct. Indeed, Correct Craft agreed to this approach. *Id.* Yet, it now misrepresents to the Court that Malibu has "twice" attempted to plead inequitable conduct. Correct Craft's ("CC's") Br. at 4, 20. The Court should reject Correct Craft's disingenuous argument, transparently directed to its unreasonable demand that, at this early stage, the dismissals it seeks should be with prejudice.

A. Malibu Pleaded Inequitable Conduct Clearly, Logically, And With Sufficient Detail To Provide Correct Craft With Abundant Notice Of The Claim

The inventors named on the patents-in-suit owe an uncompromising duty of candor to the Patent Office, and if they breach that duty by intentionally misrepresenting or withholding material information, they commit inequitable conduct. *Exergen Corp. v. Wal-Mart Stores*, 575 F.3d 1312, 1327 n.3 (Fed. Cir. 2009). A finding of any inequitable conduct renders the entire patent unenforceable. *Monsanto Co. v. Bayer Bioscience N.V.*, 514 F.3d 1229, 1243 (Fed. Cir. 2008). Under the doctrine of infectious unenforceability, inequitable conduct with respect to one patent can render related patents unenforceable. *Id.*; *Hoffmann-La Roche, Inc. v. Promega Corp.*, 319 F. Supp. 2d 1011, 1017–18 (N.D. Cal. 2004).

Pursuant to Rule 9(b), pleading inequitable conduct "requires identification of the specific who, what, when, where, and how of the material misrepresentation or omission committed before the PTO." *Exergen*, 575 F.3d at 1327. Here, Malibu carefully adhered to this requirement by pleading distinct and logically grouped collections of facts that, when accepted as true, state independent claims that the identified actors committed inequitable conduct to obtain the patents-in-suit. Counterclaim ¶¶ 13–79. Malibu's Counterclaim uses informative headings to group the allegations into discrete categories of inequitable conduct:

- withholding prior art concerning Doug Dukane's tower boat (¶¶ 20–36);
- withholding evidence used to protest a Correct Craft patent (¶¶ 37–41);
- misrepresentations made in response to the protest (¶¶ 42–53);
- withholding early commercial activities (¶¶ 54–59);
- withholding prior art drawings (¶¶ 54–59);
- withholding drawings to obtain a design patent related to the patents-in-suit (¶ 60);
- withholding early commercial sales while pursuing the design patent (¶¶ 61–62);
- submitting false declarations of joint inventorship (¶¶ 63–70);
- withholding documents filed in litigation of the patents-in-suit (¶¶ 71–74); and
- improperly claiming small entity status (¶¶ 75–79).

Many of these categories include multiple instances of inequitable conduct committed by several actors. Malibu pleaded each of these grounds with great particularity and each, standing alone, states a claim for relief. *See, e.g.*, *Nilssen v. Osram Sylvania, Inc.*, 504 F.3d 1223 (Fed. Cir. 2007) (affirming inequitable conduct on many of the same grounds). In the interests of brevity, and mindful that only one category needs to state a claim for relief, Malibu discusses three of these categories below, any one of which demonstrates that its inequitable conduct count should not be dismissed.

B. <u>The False Declarations Constitute Inequitable Conduct</u>

1. <u>Borden Larson Falsely Declared That Robert Todd Was A Joint Inventor</u>

Each of the named inventors committed inequitable conduct by submitting false declarations to the Patent Office. However, the misconduct of Borden Larson alone provides a sufficient basis for a claim. In particular:

- During prosecution of the ’823 patent, Mr. Larson signed and submitted to the Patent Office declarations stating that he, William Snook and Robert Todd jointly invented U.S. Design Patent No. D409,972 (“the ’972 design patent”) and the ’350 patent (which reissued as the ’823 patent). Counterclaim ¶ 66.
- When he signed and submitted the declarations, Mr. Larson did not believe that Robert Todd was actually an inventor. *Id.* ¶ 68. Mr. Larson so testified under oath. *Id.* He also testified that, despite voicing his clear objection, he was persuaded to falsely declare, for Correct Craft’s benefit, that Robert Todd was an inventor. *Id.*

In ruling on this Motion, ***the Court must accept these facts as true***. *Quality Foods*, 711 F.2d at 994–95. As an inventor, Mr. Larson owed the Patent Office a strict duty of candor and good faith. 37 C.F.R. §§ 1.56(a), (c)(1). He breached that duty by submitting inventorship declarations he believed to be false. The declarations were material because inventorship is “a critical requirement for obtaining a patent.” *PerSeptive Biosystems, Inc. v. Pharmacia Biotech, Inc.*, 225 F.3d 1315, 1321 (Fed. Cir. 2000). Also, the pleaded allegations include Mr. Larson’s own testimony establishing that he knowingly submitted the false declarations to the Patent Office, thus creating an inference of deceptive intent. *See Rohm & Haas Co. v. Crystal Chem. Co.*, 722 F.2d 1556, 1571 (Fed. Cir. 1983) (intent may be proven by showing acts the natural consequences of which are presumably intended by the actor); *Jackson v. Okaloosa County*, 21 F.3d 1531, 1534 (11th Cir. 1994) (the Court must draw all reasonable inferences from the facts pleaded).

The Federal Circuit has affirmed findings of inequitable conduct on similar facts. In *PerSeptive Biosystems*, the patent applicants made misrepresentations relating to the

invention's conception. Noting that "the issue is not inventorship per se, but misinformation about inventorship," the Federal Circuit upheld materiality and deceptive intent findings, as well as the ultimate finding of inequitable conduct. *PerSeptive*, 225 F.3d at 1322–23. Not only does Malibu's pleading therefore state a legally sufficient claim, it plainly satisfies the who, what, when, where and how requirements: ***who***—Borden Larson; ***what***—signed declarations stating that Robert Todd is a joint inventor; and ***when, where and how***—submitted the declarations to the Patent Office believing them to be false.

Inventorship is a threshold requirement in obtaining a patent, and the materiality of any intentionally false statement can be "independent of the claims of the patent." *PerSeptive*, 225 F.3d at 1321–22. Hence, Malibu is not required to tie the false declarations to any particular patent claims to satisfy the ***what*** or ***how*** pleading factors. *Compare Exergen*, 575 F.3d at 1329 (limiting analysis to withheld prior art references) *with Rohm & Haas*, 722 F.2d at 1571 ("In contrast to cases where allegations of fraud are based on the withholding of prior art, there is no room to argue that submission of false affidavits is not material."). Because Malibu's pleaded allegations satisfy Rule 9(b), and because they properly state a claim for relief, the Court should reject the requested dismissal.

Moreover, under the doctrine of infectious unenforceability, four of the other patents-in-suit are also unenforceable. In ruling on this Motion, ***the Court must accept as true*** that:

- The '819, '762, '159 and '761 patents are in the same family as the '823 reissue patent, Counterclaim ¶ 16, and share the same subject matter, *id.* ¶¶ 28–29.
- The false declarations of joint inventorship allowed the '819, '762, '159 and '761 patents to each benefit from the '972 patent's earlier priority date. *Id.* ¶¶ 16, 66.

On these facts, Mr. Larson's inequitable conduct on the '823 and '972 patents may be found to infect the four additional patents and render them likewise unenforceable. *See Consol. Aluminum Corp. v. Foseco Int'l Ltd.*, 910 F.2d 804, 809–12 (Fed. Cir. 1990) (inequitable conduct with respect to one patent infected related patents); *Nilssen*, 504 F.3d at 1233 ("A claim for priority is inherently material to patentability because a priority date may determine validity . . . ."). Therefore, the allegations detailing Mr. Larson's false declarations state a claim for relief and by themselves preclude dismissal of Malibu's claim.

2. Correct Craft's Attempt To Foreshadow The Merits Is Misleading

Correct Craft admits that it argues the merits of the inequitable conduct count throughout its brief. CC's Br. at 11 n.2. It further admits that arguing the merits does not help the Court resolve the dismissal issues on this Motion. *Id.* Not only are these arguments unhelpful, several are grossly misleading and must be addressed.

For example, Correct Craft asserts that Malibu's pleadings regarding the false declarations are inadequate for allegedly failing to address inventorship issues that Correct Craft claims were decided in a prior case. *Id.* at 12. Plainly, such external matters go to the merits of Malibu's inequitable conduct count, not to the sufficiency of the pleadings. "The issue is not whether [Malibu] will ultimately prevail, but whether [it] is entitled to offer evidence to support [its] claim." *Jones v. Greninger*, 188 F.3d 322, 324 (5th Cir. 1999). Correct Craft goes even further and suggests that Malibu's claims are frivolous and that Malibu has failed to comply with Rule 11. CC's Br. at 11 n.2; *see also id.* at 17.

Underlying its feigned indignation, Correct Craft well knows that Malibu's claims are not frivolous and are not governed by the prior litigation to which Correct Craft refers. That

action ended before Mr. Larson testified, in 2004, that he submitted false declarations to the Patent Office; thus, any issues decided in the prior litigation are not based on the facts alleged by Malibu. More importantly, just this year, on appeal from a case involving Mr. Larson's testimony about the very issue of inventorship of the patents in this suit, ***the U.S. Court of Appeals for the Federal Circuit repeatedly warned Correct Craft that its patents have serious inequitable conduct problems***. Muehlhauser Decl. Ex. 6 at 9:16–24, 17:10–13, 24:22–23. It is disingenuous and irresponsible of Correct Craft to not only pretend that Malibu's claims have no merit but to also cast aspersions it knows are false. Given the Federal Circuit's dire warnings, it is equally disingenuous and irresponsible of Correct Craft to imply to this Court that the last word it has received from the courts on inequitable conduct was a favorable ruling entered six years ago. Indeed, as Malibu's analysis shows, it is this Motion that was filed without basis, not Malibu's counterclaim.

C. Mr. Todd's Intentional Withholding Of His Early Sale Of A Wakeboard Tower Constitutes Inequitable Conduct

The patents-in-suit relate to boats with towers used to tow wakeboarders. Figure 1 of the '823 reissue patent depicts such a boat; numeral 100 identifies the tower:

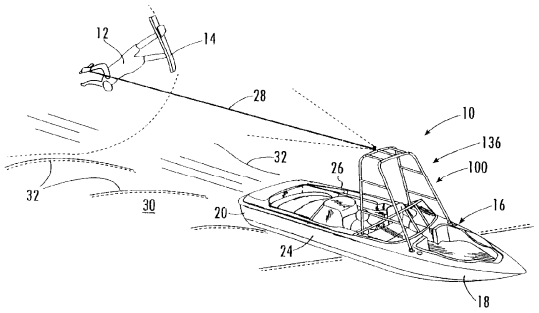

FIG. 1.

Independent of the false inventorship declarations, Malibu pleaded that Robert Todd withheld from the Patent Office his commercial sale of a wakeboard tower while attempting

to patent the tower design more than one year later in violation of 35 U.S.C. § 102(b):

- In September 1996, Correct Craft selected Mr. Todd's company to make a wakeboard tower, and with no confidentiality obligations sent drawings and notes to Mr. Todd describing the design of the tower. Counterclaim ¶¶ 54, 60.
- In late September 1996, after receiving the designs, Mr. Todd made and sold a wakeboard tower to Correct Craft. *Id.* ¶¶ 57, 61.
- The '972 patent was filed in October 1997, naming Mr. Todd as sole inventor. *Id.* ¶¶ 15, 60. Todd's early sale was material to the examination of the '972 patent because it constituted an on-sale bar to patentability under 35 U.S.C. § 102(b). *Id.* ¶ 61.
- Mr. Todd never told the Patent Office anything about the design drawings sent to him or anything about his early sale of a wakeboard tower to Correct Craft. *Id.* ¶¶ 60–61.

On this Motion, ***the Court must accept all of the above facts as true,*** and they properly state a claim for relief. Again, the pleaded allegations satisfy the who, what, when, where and how particularity requirement: ***who***—Robert Todd; ***what***—receipt of tower drawings from Correct Craft and sale of a tower to Correct Craft in September of 1996; ***when, where and how***—filing and prosecuting a patent application in October 1997, naming himself as the sole inventor and never telling the Patent Office anything about the drawings or the sale despite the strict duty of candor and good faith he owed to the Patent Office.

Mr. Todd breached his duty of candor by withholding information about the sale of the wakeboard tower he sought to patent more than a year later. 37 C.F.R. §§ 1.56(a), (c)(1). The sale was material because it occurred more than one year before the filing of the '972 design patent. 35 U.S.C. § 102(b). Malibu's pleadings need not specify claims under

Exergen because the ’972 patent, like all design patents, has just one claim—a claim to the single design shown in the patent’s figures. Muehlhauser Decl. Ex. 7; 37 C.F.R. § 1.153(a); *Tecumseh Prods. Co. v. Briggs & Stratton Corp.*, 295 F. Supp. 2d 902, 909 (E.D. Wis. 2003).

Furthermore, Mr. Todd’s receipt of the drawings and notes, and his construction of a wakeboard tower based thereon, provide the underlying facts that support the inference that Mr. Todd was intimately familiar with the wakeboard tower he sold and therefore knew of its materiality. *Jackson*, 21 F.3d at 1534. Moreover, his failure to disclose the drawings and notes in addition to withholding all facts concerning the sale supports the reasonable inference that he knowingly withheld the sale to deceive the Patent Office. Thus, deceptive intent is also properly inferred from Malibu’s pleading. *Id.*

This inequitable conduct infects the five patents-in-suit claiming priority to the ’972 patent for the same reasons discussed above regarding the false inventorship declarations. Thus, Malibu’s detailed allegations of Mr. Todd’s failure to disclose his early tower sale independently state a claim for relief and, by themselves, preclude dismissal of the count.

D. Mr. Snook’s Intentional Withholding Of The Prior Art Dukane Wakeboard Tower Constitutes Inequitable Conduct

In addition to the false declarations and withheld sales, Malibu independently pleaded that William Snook intentionally concealed from the Patent Office that Doug Dukane had been using a tower on his boat to pull wakeboarders many years before Correct Craft filed any of the patents-in-suit. Specifically, Malibu pleaded the following facts:

What: By 1994, Doug Dukane had used a tower structure on a boat to pull numerous wakeboarders, including Dean Lavelle. Counterclaim ¶¶ 20–26. Mr. Dukane used a towline attached to an upper portion of the tower structure situated over the operator’s station, as

depicted in the **June 1994 issue of Wakeboard Magazine**, *id.* ¶¶ 21–22, Ex. A.:



Who: By 1996, Mr. Dukane permitted at least one of William Snook, Borden Larson and Paul Gerding to photograph his boat tower. *Id.* ¶ 25. Additionally, Dean Lavelle discussed the benefits of Dukane's boat tower with Mr. Snook. *Id.* ¶ 26.

When, Where and How: The Dukane prior art was in public use by 1994, but the patents-in-suit are entitled to priority no earlier than 1997. *Id.* ¶¶ 15–17, 22–23, 60. The Dukane prior art disclosed features of the alleged inventions recited in Claim 1 of the '823 patent and in various other identified claims in the other patents-in-suit. *Id.* ¶¶ 27–30, 35. In particular, the Dukane prior art supplies the "bridge member" for attaching a towline that the Patent Office believed was not shown by the prior art it considered. *Id.* ¶¶ 32–35. During the prosecution of the patents-in-suit, Mr. Snook never disclosed to the Patent Office his knowledge of Dukane's boat tower or its public uses in towing wakeboarders. *Id.* ¶¶ 25–33.

Again, on this Motion, ***the Court must accept these pleaded facts as true***, and they establish another independent basis for inequitable conduct. Pre-dating the filing of the patents-in-suit by at least three years, the Dukane evidence qualifies as prior art under at least 35 U.S.C. § 102(b). Moreover, it is material prior art because it supplies the "bridge member" the Patent Office believed was missing in the prior art. Furthermore, the Dukane

prior art discloses the "bridge member" in plain view, so, having discussed with Lavelle how the Dukane boat was used and possibly having even photographed the boat, Mr. Snook was aware of the Dukane "bridge member." And he was aware of its materiality because the Patent Office explained its belief that the "bridge member" was missing from the prior art. In addition, even before the Patent Office made that statement, Mr. Snook argued to the Patent Office that the bridge member and certain additional features were an important part of the invention—and he knew that the Dukane prior art that he withheld discloses those very features. *Id.* ¶¶ 32–36. Thus, unlike the *Exergen* defendant, Malibu has pleaded explicit factual bases indicating that Mr. Snook knew the specific portions of the prior art that are material to the patent claims.

As an inventor, Mr. Snook owed the Patent Office a strict duty of candor and good faith, which he violated by failing to disclose the Dukane prior art. 37 C.F.R. §§ 1.56(a), (c)(1). Despite knowing its materiality, Mr. Snook continued to withhold the Dukane prior art during prosecution of the patents *even after* the Patent Officer indicated that the "bridge member" appeared to missing from the prior art. *Id.* ¶ 33. Malibu's pleading thus "include[s] sufficient allegations of underlying facts from which a court may reasonably infer" deceptive intent. *Exergen*, 575 F.3d at 1328; *Elk Corp. v. GAF Bldg. Materials Corp.*, 168 F.3d 28, 32 (Fed. Cir. 1999) (intent is often inferred from the circumstances surrounding applicant's conduct; direct of evidence of intent is rare and unnecessary). Thus, Malibu's detailed allegations of Mr. Snook's withholding of the Dukane prior art independently state a claim for relief and, by themselves, preclude dismissal of the count.

Correct Craft's contrary position is untenable. Instead of addressing the sufficiency of the pleadings, Correct Craft claims that the Dukane prior art was cumulative of the "Hit It" video before the Patent Office and thus, once again, improperly argues the merits. *E.g.*, CC's Br. at 11. Cloaking this immaterial argument as guidance from *Exergen*, Correct Craft posits that, at the pleading stage, Malibu must *prove* materiality by distinguishing the withheld Dukane prior art from the "Hit It" video and any other reference considered by the Patent Office. *Id.* at 5–6, 11 (e.g., citing *evidentiary* standards). But *Exergen* is not so demanding. Malibu identified the "bridge member" believed to be absent from the prior art, which in itself "explain[s] both 'why' the withheld information is material and not cumulative, and 'how' an examiner would have used this information . . . ." *Exergen*, 575 F.3d at 1329–30.

Correct Craft's arguments on the merits are, once again, unhelpful and unfortunately misleading. The Patent Office did not consider the "Hit It" video until a third party raised it during the much later *reissue* prosecution of the '350 patent. And during that reissue, Correct Craft persuaded the Patent Office that the "Hit It" video was not prior art because it could not be shown to date back more than one year before the October 1997 filing date of the '972 patent. Muehlhauser Decl. ¶¶ 10–11, Exs. 8–9. In contrast, for example, Wakeboard Magazine published the Dukane evidence by June 1994, making it indisputable prior art to Correct Craft's patents under 35 U.S.C. § 102(b). Correct Craft's argument that the Dukane prior art is equivalent to the "Hit It" video is not only irrelevant on this Motion, it is insupportable if Correct Craft's arguments to the Patent Office are to be believed.

In sum, Malibu has stated with particularity a claim of unenforceability due to inequitable conduct based on any of (1) the false inventorship declarations, (2) the withheld

commercial sales and (3) the withheld Dukane prior art, to say nothing of the numerous other categories of inequitable conduct that Malibu pleaded. There is no room for Correct Craft to argue in good faith that Malibu failed to plead the required who, what, where, when and how.

IV. MALIBU PROPERLY PLEADED ITS ANTITRUST COUNTS

Malibu seeks damages and attorneys' fees for Correct Craft's violations of federal and state antitrust laws based on enforcing patents it obtained through fraud. Counterclaim ¶¶ 148–54. As it did on its inequitable conduct count, Malibu pleaded abundant and sufficient facts, and Correct Craft's request for dismissal should be denied.

In *Walker Process Equipment, Inc. v. Food Machinery & Chemical Corp.*, 382 U.S. 172 (1965), the Supreme Court held that enforcement of a fraudulently procured patent could violate § 2 of the Sherman Act provided the other elements of a § 2 case are present. *Hydril Co. LP v. Grant Prideco LP*, 474 F.3d 1344, 1349 (Fed. Cir. 2007). Under § 2, and analogous Florida state law, it is "a crime to monopolize, to attempt to monopolize, or to conspire to monopolize any part of interstate or foreign trade." *Spanish Broad. Sys. of Fla. v. Clear Channel Commc'ns, Inc.*, 376 F.3d 1065, 1074 (11th Cir. 2004); *Ad-Vantage Tel. Directory Consultants v. GTE Directories Corp.*, 849 F.2d 1336, 1341 (11th Cir. 1987) (Florida has essentially adopted federal antitrust law). As shown below, Malibu has, at a minimum, properly and sufficiently pleaded Correct Craft's attempt to monopolize. The fraud portion of a *Walker Process*-type antitrust claim falls within the scope of Rule 9(b)'s particularity requirement, but the § 2 allegations need only comply with Rule 8. *Morton Grove Pharms., Inc. v. Par Pharm. Cos.*, 80 U.S.P.Q.2d 1416, 1421, 1424 (N.D. Ill. 2006).

A. Malibu Has Properly Pleaded *Walker Process* Fraud With Particularity

Walker Process fraud, like common law fraud, occurs when one misrepresents or omits a material fact with intent to deceive. *Hydril*, 474 F.3d at 1349. Malibu's detailed pleadings set forth these elements. For example, Malibu pleaded with particularity that Borden Larson submitted false declarations of inventorship with deceptive intent, and also pleaded with particularity that William Snook withheld the highly material Dukane prior art with intent to deceive. Malibu has further alleged that these acts and omissions induced the Patent Office to justifiably rely on the misconduct and that it would not have issued the patents-in-suit but for the misconduct. Counterclaim ¶ 79. As a result, Malibu has adequately pleaded *Walker Process* fraud. *See Hydril*, 474 F.3d at 1349–50.

B. The Antitrust Allegations Satisfy The Liberal Rule 8 Pleading Standard

Rule 8(a)(2) only requires a "short and plain statement of the claim" designed to "'give the defendant fair notice of what the . . . claim is and the grounds upon which it rests.'" *Bell Atl.*, 550 U.S. at 555. Malibu's § 2 allegations satisfy this "exceedingly low" standard. *Covad Commc'ns Co. v. BellSouth Corp.*, 299 F.3d 1272, 1279 (11th Cir. 2002), *vacated on other grounds*, 540 U.S. 1147 (2004). Malibu pleaded Correct Craft's attempt to monopolize, including that Correct Craft has (1) engaged in anticompetitive conduct (2) with a specific intent to monopolize and (3) a dangerous probability of achieving monopoly power. *Spanish Broad.*, 376 F.3d at 1074. More particularly, Malibu pleaded that:

- Plaintiff Correct Craft IP Holdings, LLC and Correct Craft, Inc. ("the Correct Craft Entities") knew they procured the patents-in-suit through fraud. Counterclaim ¶ 80.
- The Correct Craft Entities have misused their patents with specific intent to obtain

and maintain monopoly power in the relevant nationwide markets for towered power boats and towers for towing watersports performers. *Id.* Through threatened and actual patent enforcement actions, the Correct Craft Entities have successfully excluded numerous companies from these markets and have induced numerous other market participants to take licenses under the patents-in-suit. *Id.* ¶¶ 81–85.

- These anticompetitive activities have harmed market participants and consumers and have artificially inflated prices in the relevant markets. *Id.* ¶ 81.
- Through fraudulent practices before the Patent Office, the Correct Craft Entities continue to improperly grow their patent portfolio covering technology related to the relevant markets. *Id.* ¶ 87. As a result of the growing reach of their exclusive rights emanating from the patents-in-suit and their success in excluding market participants or obtaining licenses on the fraudulently procured patents-in-suit, there is a dangerous probability that the Correct Craft Entities will obtain monopoly power. *Id.* ¶¶ 80–88.

On this Motion, ***the Court must accept these facts as true***, and, at a minimum, these facts properly state a claim for attempted monopolization in violation of § 2. *See, e.g.*, *Andrx Pharms., Inc. v. Elan Corp., PLC*, 421 F.3d 1227, 1235–36 (11th Cir. 2005).

Correct Craft's arguments to the contrary do not withstand scrutiny. In essence, Correct Craft demands detailed market information from Malibu in order to satisfy Rule 8. *E.g.*, CC's Br. at 18 (claiming that details about, e.g., barriers to entry and elasticity of demand are "necessary" to state a plausible claim). That is not what Rule 8 requires. Rather, it requires precisely what Malibu has provided: a short and plain statement that puts Correct Craft on notice of Malibu's antitrust claims and the grounds therefor. *Bell Atl.*, 550 U.S. at

555; *cf. ErinMedia, LLC v. Nielsen Media Research, Inc.*, 401 F. Supp. 2d 1262, 1267 (M.D. Fla. 2005) (denying motion to dismiss § 1 antitrust claim and noting that plaintiff did not need to state specific facts about defendant's monopoly). Indeed, the Eleventh Circuit recognizes that antitrust cases are fact-intensive and require appropriate market analysis, and therefore are typically inappropriate for a Rule 12 dismissal. *Andrx*, 421 F.3d at 1236.

V. MALIBU PROPERLY PLEADED ITS ATTORNEYS' FEES COUNT

Malibu also seeks an award of its attorneys' fees pursuant to 35 U.S.C. § 285. Counterclaim ¶¶ 146–47. Correct Craft contends that this count should be dismissed because it does not state a cause of action. CC's Br. at 19. To the contrary, the Federal Circuit has held that it is not improper for a party to present an attorneys' fees count in a counterclaim requesting relief under § 285. *H.R. Techs., Inc. v. Astechnologies, Inc.*, 275 F.3d 1378, 1386 (Fed. Cir. 2002). Moreover, a finding of inequitable conduct is sufficient grounds for finding a case exceptional under § 285. *A.B. Chance Co. v. RTE Corp.*, 854 F.2d 1307, 1313 (Fed. Cir. 1988). Malibu specifically pleaded that this is an exceptional case, Counterclaim ¶ 147, and devoted 67 paragraphs to detailed allegations supporting inequitable conduct, *id.* ¶¶ 13–79. Malibu's attorneys' fees count is pleaded properly and should not be dismissed.

VI. MALIBU PROPERLY FORMATTED ITS PLEADINGS

In short, Malibu states plausible claims of inequitable conduct, antitrust violations and attorneys' fees. Correct Craft seeks dismissal of each of these counts, as well as Malibu's remaining counts, on the grounds that Malibu's pleadings incorporate the allegations from other counts in "shotgun" format. CC's Br. at 13. Although Malibu's counts incorporate by reference the allegations from previous counts, they do not suffer from

the defects of "shotgun" pleadings that courts have found objectionable. For example, there is no danger that Correct Craft will be unable to discern which allegations apply to it rather than another, unaffiliated party.

Moreover, unlike pleadings in other cases, Malibu's Factual Background section (¶¶ 13–88) is divided into logical, coherent subsections whose facts are easily linked to the claims on which they bear. For example, it is clear from the titles of these subsections, such as "Failure to Disclose Dukane Prior Art," that paragraphs 13–79 are relevant to Malibu's inequitable conduct count. Moreover, since Malibu's antitrust counts are based on allegations that Correct Craft obtained its patents fraudulently, it is clear that paragraphs 13–79 also apply to Malibu's antitrust counts. Similarly, because inequitable conduct can make a case exceptional, these paragraphs also bear on Malibu's claim for its attorneys' fees. Moreover, the repeated references to 35 U.S.C. § 102 in paragraphs 13–79 indicate that these paragraphs also bear on Malibu's counts for declaratory judgment of invalidity. Also, the subtitle "Misuse of the Fraudulently Procured Patents-in-Suit to Obtain Monopoly Power" clearly signals that paragraphs 80–88 relate to Malibu's antitrust claims.

Malibu's incorporations by reference are justified and are not confusing. Correct Craft offers no discernible reason why Malibu's pleading format has not put it on notice of the grounds for Malibu's claims. Nonetheless, in the event that the Court finds this pleading format unclear, Malibu is certainly willing and able to replead its counterclaim as directed by the Court. *Wagner v. First Horizon Pharm. Corp.*, 464 F.3d 1273, 1280 (11th Cir. 2006) (even for true "shotgun" pleadings, the appropriate approach is not dismissal but an order to replead).

VII. AT A MINIMUM, MALIBU SHOULD HAVE THE OPTION TO AMEND

Correct Craft seeks not only dismissal, but also dismissal with prejudice. As the foregoing discussion explains, dismissal is not proper; but even if it were, a remedy so drastic as dismissal with prejudice is unwarranted. Rule 15 directs courts to "freely give leave [to amend] when justice so requires," and thereby "severely restrict[s]" a court's discretion to dismiss with prejudice. *Bryant v. Dupree*, 252 F.3d 1161, 1163 (11th Cir. 2001). Also, any omission in the pleading was inadvertent and in good faith, and Correct Craft has no basis for characterizing any omissions as "calculated." CC's Br. at 19. Should the Court dismiss any portion of Malibu's Counterclaim, it should do so without prejudice, and Malibu respectfully requests leave to amend.

VIII. CONCLUSION

In sum, Malibu has pleaded facts upon which a court could plausibly find inequitable conduct, antitrust violations and that Malibu is entitled to its attorneys' fees. Moreover, Malibu's pleading format does not require dismissal. Accordingly, Malibu respectfully requests that this Motion be denied. In addition, pursuant to Local Rule 3.01(j), Malibu hereby requests an oral hearing that it estimates would require fifteen minutes per side.

Respectfully submitted this 8th day of October, 2009.

/s/ DOUGLAS G. MUEHLHAUSER
DOUGLAS G. MUEHLHAUSER, ESQ.
California Bar No.: 179495
doug.muehlhauser@kmob.com
Knobbe Martens Olson & Bear LLP
2040 Main Street, 14th Floor
Irvine, California 92614-3641
(949) 760-0404 Telephone
(949) 760-9502 Facsimile
Lead Trial Counsel for Defendants

CERTIFICATE OF SERVICE

I hereby certify that on October 8, 2009, I electronically filed the foregoing with the Clerk of the Court by using the CM/ECF system.

By: /s/ DOUGLAS G. MUEHLHAUSER
Douglas G. Muehlhauser

7927227
100809