EXHIBIT F

US006496222B1

(12) **United States Patent**
Roberts et al.

(10) **Patent No.: US 6,496,222 B1**
(45) **Date of Patent: *Dec. 17, 2002**

(54) **DIGITAL CAMERA WITH MEMORY FORMAT INITIALIZATION**

(75) Inventors: Marc K. Roberts, Burke, VA (US); Matthew A. Chikosky, Springfield, VA (US); Jerry A. Spensl, Vienna, VA (US)

(73) Assignee: St. Clair Intellectual Property Consultants, Inc., Grosse Pointe, MI (US)

(*) Notice: Subject to any disclaimer, the term of this patent is extended or adjusted under 35 U S C 154(b) by 0 days.

This patent is subject to a terminal disclaimer

(21) Appl. No : 09/724,375

(22) Filed: Nov. 27, 2000

Related U.S. Application Data

(63) Continuation of application No. 09/253,831, filed on Feb 19, 1999, now Pat. No. 6,233,010, which is a continuation of application No 08/712,493, filed on Sep 11, 1996, which is a continuation of application No 08/098,787, filed on Jul 29, 1993, now Pat. No. 5,576,757, which is a continuation of application No. 07/878,603, filed on May 5, 1992, now abandoned, which is a continuation of application No 07/615,848, filed on Nov 20, 1990, now Pat. No. 5,138,459

(51) Int. Cl.[7] H04N 5/76

(52) U.S. Cl. 348/231; 348/220; 348/207

(58) Field of Search 348/207, 220, 348/221, 222, 231, 232, 233, 373; 386/117, 118; H04N 5/225

(56) **References Cited**

U S PATENT DOCUMENTS

4,074,324	A	2/1978	Barrett
4,118,687	A	10/1978	McWaters et al
4,131,919	A	12/1978	Lloyd et al.
4,167,022	A	9/1979	Dischert et al
4,385,361	A	5/1983	Moates

(List continued on next page)

FOREIGN PATENT DOCUMENTS

DE		3809677 A1	3/1988
EP		0105213 A2	4/1984
EP		90303076.5	3/1990
EP		0371961 A2	6/1990
EP		0218291 B1	3/1991

(List continued on next page)

OTHER PUBLICATIONS

Izawa et al *
EIKONIX (Sep 29, 1988) *
"Camera Stores Images On Chips", Laser Focus World, Apr 1990, pp 72, 74 and 75
"Should I Sell Now? Follow the Trends", CompuServe Magazine, at 30 (Nov 1991), Robert Cullen
"Apple Planning to Announce 68030 Version of MacII", Info World, vol 10, No 38 (Sep 5, 1988), Laurie Flynn, et al.
"Digital Card Camera", ITEJ Technical Report, vol 14, No 5, at 7 (Jan 1990), Fujimori et al. (no translation)
"Graphics Formats", Byte, at 305 (Sep 1989), Gerald L Graef
"Directory Assistance", Byte, at 327 (Jun 1989), Rick Grehan

(List continued on next page.)

Primary Examiner—Tuan Ho
(74) *Attorney, Agent, or Firm*—Harness, Dickey & Pierce, P.L.C

(57) **ABSTRACT**

A digital camera includes a digital memory system having a control unit for checking for proper format initialization of a removable digital memory element and for performing format initialization of the memory element when necessary

12 Claims, 11 Drawing Sheets

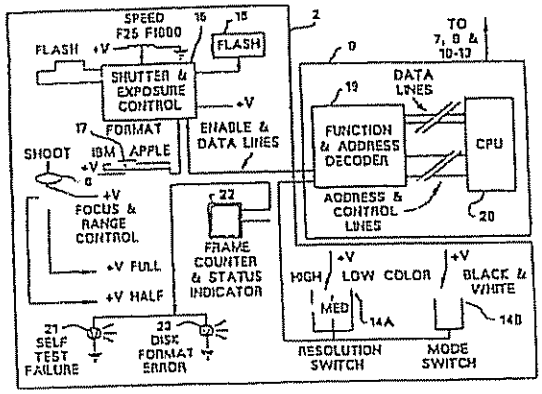

U S PATENT DOCUMENTS

4,420,773	A	12/1983	Toyoda et al	
4,453,268	A	6/1984	Britt	
4,456,931	A	6/1984	Toyoda et al.	
4,541,021	A	9/1985	Konishi et al	
4,571,638	A	2/1986	Schneider et al	
4,577,239	A	3/1986	Sougen	
4,587,633	A	5/1986	Wang et al	
4,614,977	A	9/1986	Kawahara et al	
4,641,203	A	2/1987	Miller	
4,656,524	A	4/1987	Norris et al	
4,656,525	A	4/1987	Norris	
4,682,248	A	7/1987	Schwartz	
4,689,696	A	8/1987	Plummer	
4,691,253	A	9/1987	Silver	
4,701,805	A	10/1987	Maeshima	
4,706,126	A	11/1987	Kondo	
4,714,962	A	12/1987	Levine	
4,730,222	A	3/1988	Schauffele	
4,739,400	A	4/1988	Veitch	
4,758,883	A	7/1988	Kawahara et al	
4,760,606	A	7/1988	Lesnick et al	
4,763,204	A	8/1988	Kinoshita et al	
4,768,110	A	8/1988	Dunlap et al.	
4,772,956	A	9/1988	Roche et al.	
4,774,600	A	9/1988	Baumeister	
4,782,399	A	11/1988	Sato	
4,803,554	A	2/1989	Pape	
4,817,050	A	3/1989	Komatsu et al	
4,821,121	A	4/1989	Beaulier	
4,827,347	A	5/1989	Bell	
4,829,383	A	5/1989	Harase et al.	
4,837,628	A	6/1989	Sasaki	
4,847,677	A	7/1989	Music et al	
4,855,779	A	8/1989	Ishikawa et al	
4,858,032	A	8/1989	Okada et al	
4,872,054	A	10/1989	Gray et al	
4,876,590	A	10/1989	Parulski	
4,887,161	A	12/1989	Watanabe et al	
4,897,732	A	1/1990	Kinoshita et al	
4,903,132	A	2/1990	Yamawaki	
4,905,092	A	2/1990	Koshiishi et al	
4,907,231	A	3/1990	Watanabe et al	
4,914,746	A	4/1990	Nishi et al	
4,935,821	A	6/1990	Sano et al	
4,943,850	A	7/1990	Asaida	
4,947,271	A	8/1990	Nakayama et al	
4,963,986	A	10/1990	Fukuyama et al.	
4,967,297	A	10/1990	Okita et al	
4,972,266	A	11/1990	Tani	
4,974,197	A	11/1990	Blount et al	
4,982,291	A	1/1991	Kurahashi et al	
4,992,886	A	2/1991	Klappert	
4,994,912	A	2/1991	Lumelsky et al	
4,999,715	A	3/1991	Porcellio et al	
5,006,937	A	4/1991	Nonoshita et al	
5,016,107	A	* 5/1991	Sasson et al	
5,018,017	A	* 5/1991	Sasaki et al	
5,018,083	A	5/1991	Watanabe et al	
5,027,214	A	6/1991	Fujimori	
5,027,221	A	6/1991	Hisatake et al.	
5,029,115	A	7/1991	Geraci	
5,032,918	A	7/1991	Ota et al	
5,032,927	A	7/1991	Watanabe et al	
5,032,930	A	7/1991	Suetaka et al	
5,034,804	A	* 7/1991	Sasaki et al	
5,035,633	A	7/1991	Kobayashi et al	
5,038,392	A	8/1991	Morris et al	
5,040,068	A	8/1991	Parulski et al	
5,058,185	A	10/1991	Morris et al	
5,060,069	A	10/1991	Aoki	
5,065,246	A	11/1991	Takemoto et al	
5,067,029	A	11/1991	Takahashi	
5,068,744	A	11/1991	Ito	
5,077,612	A	12/1991	Megigardt et al	
5,091,747	A	2/1992	Tsai	
5,097,344	A	3/1992	Aoki et al	
5,099,846	A	3/1992	Hardy	
5,105,284	A	4/1992	Sakata et al	
5,111,283	A	5/1992	Nagasawa et al	
5,111,288	A	5/1992	Blackshear	
5,119,081	A	6/1992	Ikehira	
5,130,813	A	7/1992	Oie et al.	
5,153,730	A	10/1992	Nagasaki et al	
5,164,831	A	11/1992	Kuchta et al	
5,170,262	A	12/1992	Kinoshita et al	
5,212,770	A	5/1993	Smith et al	
5,214,781	A	5/1993	Miki et al	
5,218,455	A	6/1993	Kristy	
5,227,863	A	7/1993	Bilhrey et al.	
5,231,501	A	7/1993	Sakal	
5,231,549	A	7/1993	Morehouse et al.	
5,241,659	A	8/1993	Parulski et al.	
5,280,397	A	1/1994	Rhodes	
5,287,266	A	2/1994	Malec et al	
5,301,262	A	4/1994	Kashiwagi	
5,321,831	A	6/1994	Hirose	
5,379,376	A	1/1995	Bednowitz	
5,454,067	A	9/1995	Tsai	
5,454,096	A	* 9/1995	Otsuka et al	395/401
5,475,539	A	12/1995	Orii	
5,661,823	A	8/1997	Yamauchi et al	
5,724,101	A	3/1998	Haskin	
5,764,286	A	6/1998	Kawamura et al	
5,822,082	A	10/1998	Sato et al	
6,020,982	A	2/2000	Yamauchi et al	
2001/0033734	A1	10/2001	Hoda et al	

FOREIGN PATENT DOCUMENTS

EP	0156923 B1	12/1993
EP	0390421 B1	7/1994
JP	61-269565	11/1986
JP	62-237341	10/1987
JP	63-45760	2/1988
JP	63-284987	11/1988
JP	A 64-060071	3/1989
JP	2-125572	5/1990
JP	2-172382	7/1990
JP	2-183675	7/1990
JP	A 02-186882	7/1990
JP	2-202782	8/1990
JP	A 02-211780	8/1990
JP	2-222385	9/1990
JP	2-257780	10/1990
WO	90/09717	8/1990

OTHER PUBLICATIONS

"Picture Recording and Electric Power Consumption", Shashim Kogyo, at 94 (Apr 1988), Sumihisa Hashiguchi

"Possibilities of the Digital Electronic Still Camera", Shashin Kogaku, at 110 (Feb 1988), Sumihisa Hashiguchi

"MacDOSsier, Tearing Down The Walls Between Macs and PCs", MacWorld, at 165 (Jul 1990), Jim Heid

"Swallowing Planets; Today's Feeding Frenzy of Data Capture", Journal of Electronic Defense, vol 12, No 10, at 109 (Oct 1989) Sheldon B. Herskovitz

"Desktop Video On The Amiga", Electronic Learning, vol 8, No 2, at 54 (Oct 1988), Lanny Hertzberg

"Imaging A Vampire; Sofware Review' Evaluation Of Three MSDOS–Based Image Processing Software Packages. ESD; The Electronic System Design Magazine, vol 19, No 10, at 63 (Oct 1989), Steven J Hollinger
"Marketing through Innovation, Photonics at Work", Photonics Spectra, vol 23, No 7, at 66 (Jul 1989), Herbert Kaplan.
Photoshop and Color Sudio: Mac Image Manipulation Tools, InfoWorld, at 118 (Jan. 29, 1990). Michael Miller.
"Digital Still Video Camera Using Semiconductor Memory Card", IEEE 1989, at 184 (1989), Izawa, et al
"Logitech Debuts Digital Camera', Government Computer News, vol 10, No 19 (Sep 16, 1991), Cynthia Morgan
"TIFF File Format", The C Gazette, vol 5, No 2, at 27 (Winter 1990–1991), James Murray
"Solid–State Electronic Still Camera Memory Card System", ITEJ 1989, at 193–194, Nakagawa, et al (no translation)
"Digital Still Camera System". ITEJ Technical Report, vol 14, No. 5, at 13 (Jan 1990), Nishi, et al. (no translation)
"Card Camera 'FUJIX DS–IP' ', ITEJ Technical Report, vol 13, No 22,.at 11 (Mar 1989), Ochi, et al (no translation)
"State Of The Art For The 90's Office', Appliance Manufacturer, vol 37, No 1, at 76 (Jan 1989), Norman Remich
"Highlights From Digital 90 Trade Show", Editor & Publisher, vol 123, No 7, at 42P (Feb 24, 1990), Jim Rosenberg
"Dycam Model I the 'first portable digital still camera'". MacWEEK, vol. 4, No. 35, at 34 (Oct 16, 1990), Carolyn Said
"Camera Uses E2 PROM Film", Electronic Engineering Times, at 45 (Apr 10, 1989), Miyoko Sakurai.
"Picture Coding For Digital Still Camera". Toshiba Review, vol 45, No 8, at 635 and 638 (1990), Susaki (no translation)
'Dycam premiers still–video camera', MacWEEK, Vol 4, No. 11, at 27 (Mar 20, 1990), Carolyn Said
"Camera Uses E2 PROM Film", Electronic Engineering Times, at 45 (Apr 10, 1989), Miyoko Sakurai
"Picture Coding For Digital Still Camera". Toshiba Review, vol. 45, No 8, at 635 and 638 (1990), Sasaki (no translation)
Digital Electronic Still Camera System. ITEJ Technical Report, vol. 13, No 22, at 17 (Mar 1989), Sasaki, et al (no translation)
"Now And Future Of Electronic Still Camera', 1990 Joint Convention Record of Institutes of Electrical and Information Engineers, Japan (Aug 28–30 1990) Sasaki et al (no translation)
"Graphics Power For The Rest Of Us". PC World, at 164 (Nov. 1990), Mike Smith–Heimer, et al
"Digital Still Camera For Business Use", Electronics Life, at 84 (Apr 1990), Someya (no translation)
"Photoshop is Picture–Perfect', Byte, at 103 (Apr 1990), Tom Thompson
"Freelance Masters OS/2", PC World, at 85 (Nov 1990), John Walkenbach.
"Overview Of The Jpeg (ISO/CCITT) Still Image Compression Standard", SPIE, vol 1244 Image Processing Algorithms and Techniques, at 220 (1990), Gregory Wallace.
"A Bit Rate Controlled Dci Compression Algorithm For Digital Still Camera", Proc of SPIE –The International Society for Optical Engineering, vol 1244 at 234 (Feb. 12–14, 1990) Watanabe, et al
'Photos Go Electronic: New Standard Pulls Images Into Computer Age', High Technology Business, vol 8, No 2; at 15 (Feb 1988), Robert Wood
"AGA Thermovision Digital Image Processing System", by AGA Infrared Systems AB (1982)
"AGA Thermovision OSCAR –Pericolor System –Product Information", by AGA Infrared Systems AB (Copyright 1980)
"Agema Product Specification –TIC–8000 with CATS, A Complete Hardware/Software Package For Thermal Analysis", by Agema Infrared Systems (1986)
Apple SuperDrive: User Guide, http://docs info apple com/article html?artnum–4545 http://docs info.apple com/article html?artnum–4546 http://docs info.apple.com/article-html?artnum–4547 (Aug 2, 1989), Apple Computer, Inc
Canon XapShot RC250 Manual (1988)
Canvas 2 0 software
Canvas 2.0 Upgrade Manual, at v (1988), Levy et al, Deneba Systems, Inc
CompuServe Financial Services User s Guide, at 4–10 (Jul 1988), CompuServe Incorporated.
CompuServe Information Manager User Guide, at 115, 121, 172, 182, 183 (Nov 1989), CompuServe Incorporated.
CompuServe Information Service, VIDTEX 4 0 Standards for Terminal Emulator Programs (Apr 1985), CompuServe Incorporated
"Curtis Inc. Announces New Prices And New ROMDISK Models", New Release (Jan 4, 1988), Curtis, Inc
Dataviz "MacLink Plus" Advertisement, MacWorld, vol 7, No. 4 (Apr 1990).
"Digital Back For Medium–Format Rollei Cameras", Editor & Publisher, vol 124, No 8, at 23P (Feb 23, 1991)
"Digital Camera –The Path To The Present", by Japan Camera Museum (Oct 24, 2000) (no translation)
DRAW, a Hi–Res Drawing Program by Micro–Labs, Inc. (1984).
"Fujifilm Brings The Digital Camera Ds–7 With Convenient SmartMedia Storage To The Consumer Market", http://www fujifilm co jp/eng/salon/pkna/digi–1 html (Sep 18, 1996)
Fujix Digital Still Video Camera DS–IP, Fuji Photo Film Co., Ltd (1988)
FUJIX DS–X user's manual (1991)
Graphics Interchange Format (GIF) Specification. pp 1–18, CompuServe (Jun 15, 1987)
Graphics Interchange Format, Version 89a, pp 1–42, CompuServe (Jul 31, 1990)
Heat Made Visible –The World of Infrared, by Agema Infrared Systems (1989)
HMI Protocol Definition Document, Remote Terminal Interrogation Sequence 1 10 2, at 1
IBM Disk Operating System Version 3 3 User's Guide and Reference, First Edition (Apr 1987)
"IC Card Camera System –Toshiba & Fuji Photo Film', Dempa Daily Newspaper Technical Report (Mar 30, 1989)
Inside Macintosh Volume V by Apple Computer, at V–85 to V–115 (Jan. 1988).
Macintosh MacPaint Manual, Apple Computer, Inc. (1983)
Macintosh Manual (1984)
"Maintenance Technology –Infrared Thermography"Agema Infrared Systems (Nov 1989)
Microsoft MS–DOS User's Guide Version 3 3, Microsoft Corporation (1987)
MS–DOS 4 0

"Palmtop Computer Sales Soar", The Atari Report, vol 3, No 1, at 5 (of printout), Atari Corporation (Spring 1990)
PhotoMac, User Manual, at 105–106, Avalon Development Group, (1988), Ewart et al.
Prototype Announcement, Fujix DS–IP digital still camera, Fuji Photo Film Co., Ltd. Fuji News (Sep 20, 1988)
"Reviews: Adome Photoshop 1 0", MacWorld, vol 7, No 6, at 186 (Jun 1990)
SLIDESHOW, a RAPIDOS Software by Rapidynamic Software, Inc., licensed to Micro–Labs (1984)
"Still Videos, Anyone?", IEEE Spectrum, at 41 (Feb. 1990).
"The Atari Portfolio Palmtop", http://www atari–history-.com/computers/pccomputers/portfolio html (1989)
Thermovision 400 Series Operating Manual, by Agema Infrared Systems (1991)
"Thermovision 470 Information –Thermovision 470 System", by Agema Infrared Systems (1989).
Thermovision 800 Series Burst Recording Unit –Burst Recording Unit, by Agema Infrared Systems (1989)
TIC–8000 With CATS E –Thermovision 800 Series TIC–8000 With CATS E The Complete Hardware/Software Package For Thermal Analysis, by Agema Infrared Systems (1988)
BountyQuest Digital camera with PC–compatible output format Bounty, http://www bountyquest com/bounties/displayBounty php?bounty Name=1121, Bounty Quest Corp, Inc (2002–02)
Thermovision 470 Technical Specification, Thermovision 400 Series Operating Manual, AGEMA Infrared Systems AB (1989)
Macintosh IIx Owner's Guide (1988)
Macintosh SE with FDHD (SuperDrive)
NASA Tech Briefs, Digital Electronic Still Camera, at 30 (Jun 1993), Samuel D Holland, et al
"Still Video –Still Here?', Electronics World & Wireless World, at 873 (Oct 1990), George Cole
Macintosh System Software User's Guide Version 6 0 (1988)
Personal Vision Live Video/Frame Grabber for Macintosh II (1989)
'StuffIt', Macuser, at 77 (Dec 1988)
Apple II System Utilities Manual, Apple Computer, Inc. (1985)
Apple IIGS System Software User's Guide, Version 5 0, Chapter 2 and Chapter 6

* cited by examiner

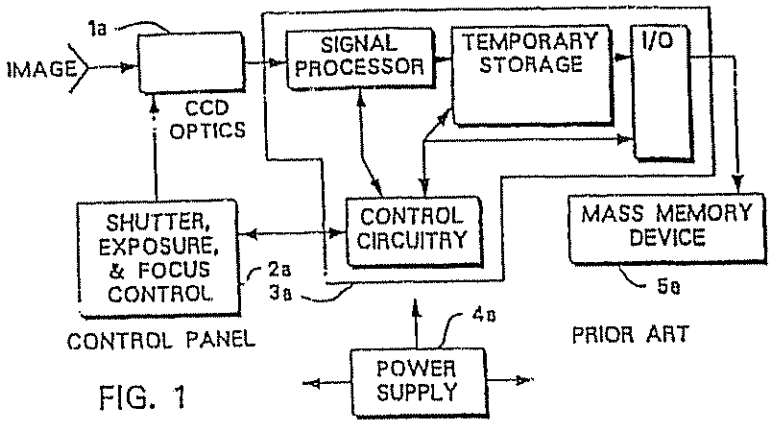
1a
IMAGE
CCD OPTICS
SIGNAL PROCESSOR
TEMPORARY STORAGE
I/O
SHUTTER, EXPOSURE, & FOCUS CONTROL
2a
3a
CONTROL CIRCUITRY
MASS MEMORY DEVICE
5a
CONTROL PANEL
4a
POWER SUPPLY
PRIOR ART

FIG. 1

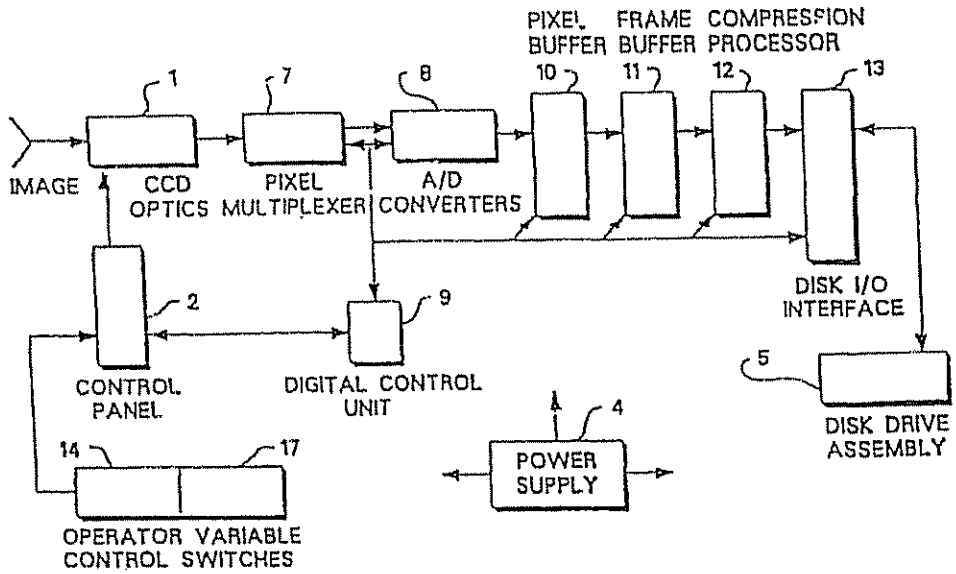
PIXEL BUFFER
FRAME BUFFER
COMPRESSION PROCESSOR
1
7
8
10
11
12
13
IMAGE
CCD OPTICS
PIXEL MULTIPLEXER
A/D CONVERTERS
DISK I/O INTERFACE
2
9
5
CONTROL PANEL
DIGITAL CONTROL UNIT
DISK DRIVE ASSEMBLY
4
14
17
POWER SUPPLY
OPERATOR VARIABLE CONTROL SWITCHES

FIG. 2

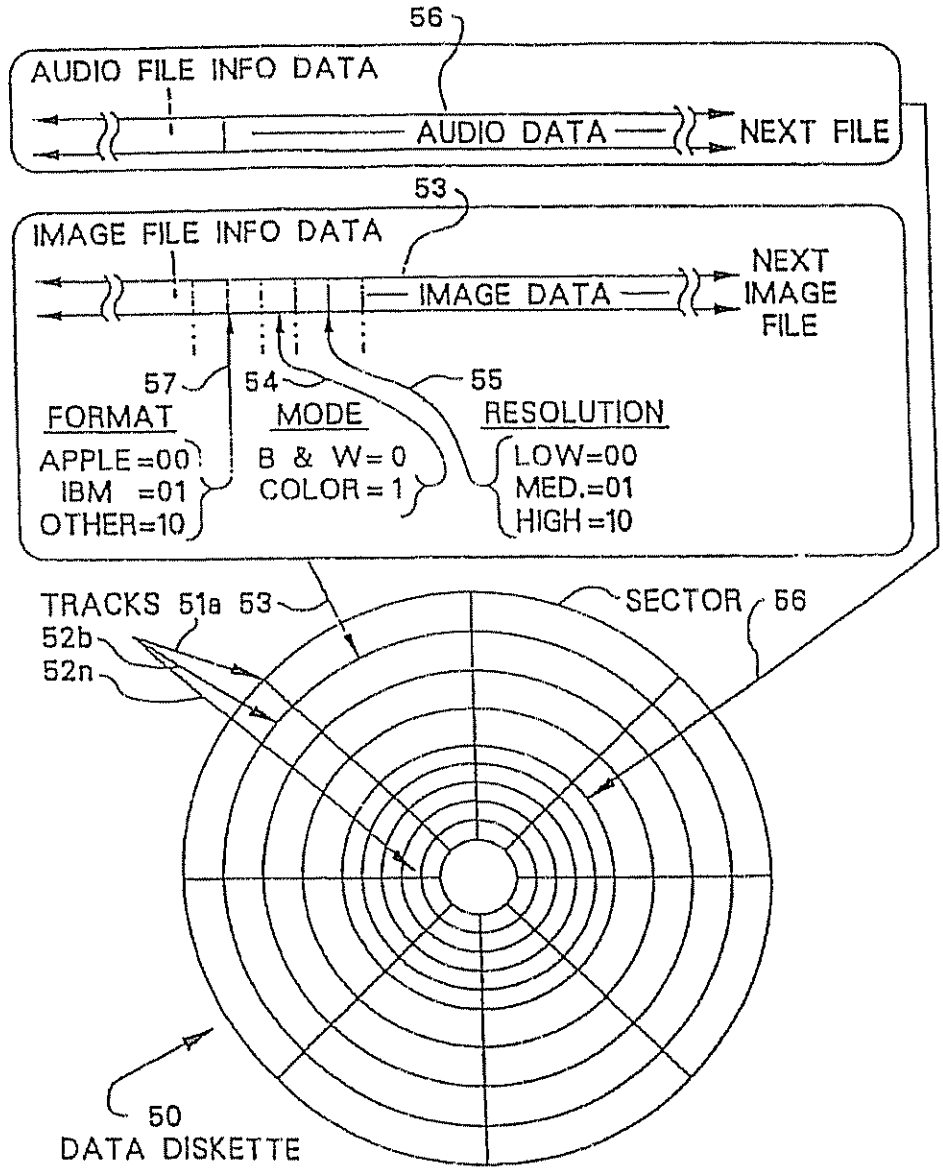
56
AUDIO FILE INFO DATA
AUDIO DATA
NEXT FILE
53
IMAGE FILE INFO DATA
IMAGE DATA
NEXT IMAGE FILE
57
54
55
FORMAT
APPLE=00
IBM =01
OTHER=10
MODE
B & W=0
COLOR=1
RESOLUTION
LOW=00
MED.=01
HIGH=10
TRACKS 51a
52b
52n
53
SECTOR
56
50
DATA DISKETTE

FIG. 2A

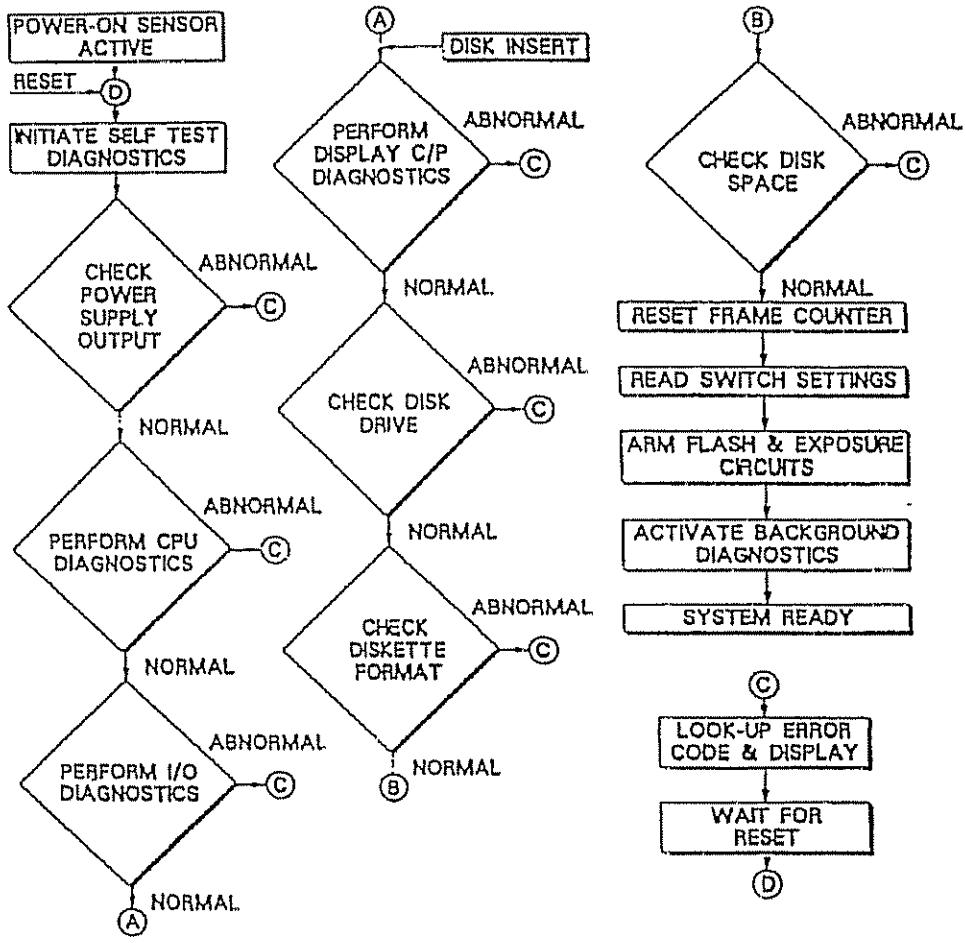
POWER-ON SENSOR ACTIVE
RESET
D
INITIATE SELF TEST DIAGNOSTICS
CHECK POWER SUPPLY OUTPUT
ABNORMAL
C
NORMAL
PERFORM CPU DIAGNOSTICS
ABNORMAL
C
NORMAL
PERFORM I/O DIAGNOSTICS
ABNORMAL
C
NORMAL
A
A
DISK INSERT
PERFORM DISPLAY C/P DIAGNOSTICS
ABNORMAL
C
NORMAL
CHECK DISK DRIVE
ABNORMAL
C
NORMAL
CHECK DISKETTE FORMAT
ABNORMAL
C
NORMAL
B
B
CHECK DISK SPACE
ABNORMAL
C
NORMAL
RESET FRAME COUNTER
READ SWITCH SETTINGS
ARM FLASH & EXPOSURE CIRCUITS
ACTIVATE BACKGROUND DIAGNOSTICS
SYSTEM READY
C
LOOK-UP ERROR CODE & DISPLAY
WAIT FOR RESET
D

FIG. 3

FIG. 5 A

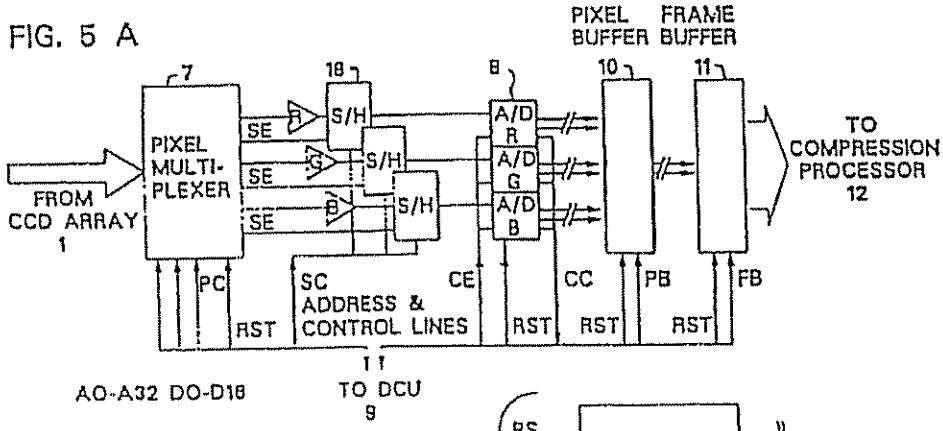

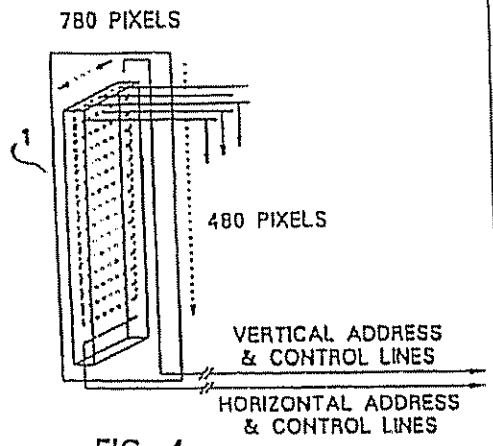

FIG. 4

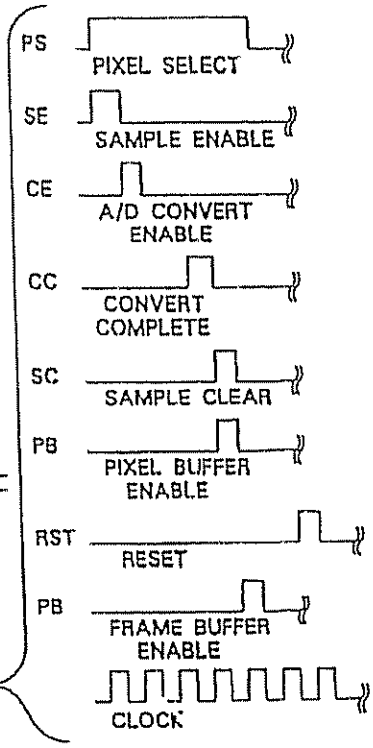

FIG. 5B

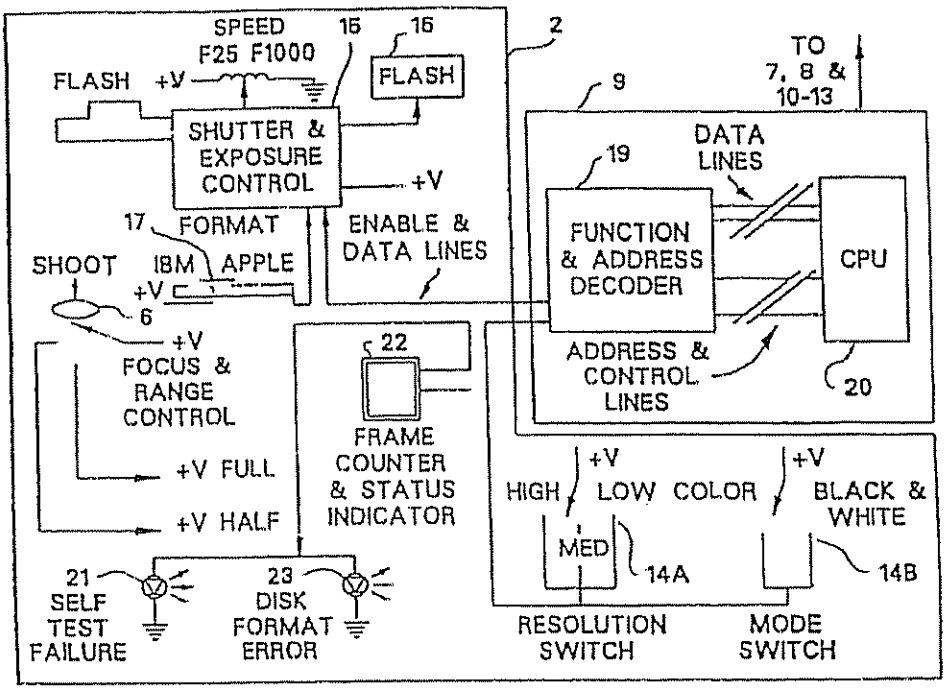

FIG. 6

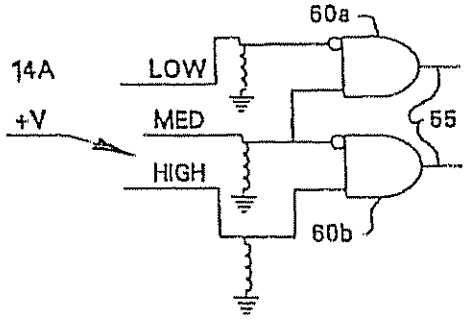

FIG. 6A

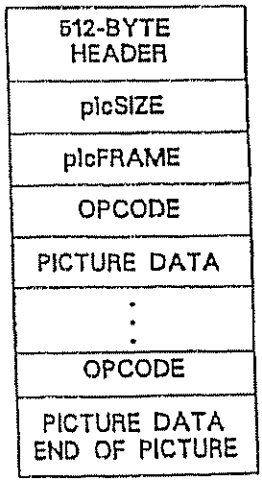

FIG.6B

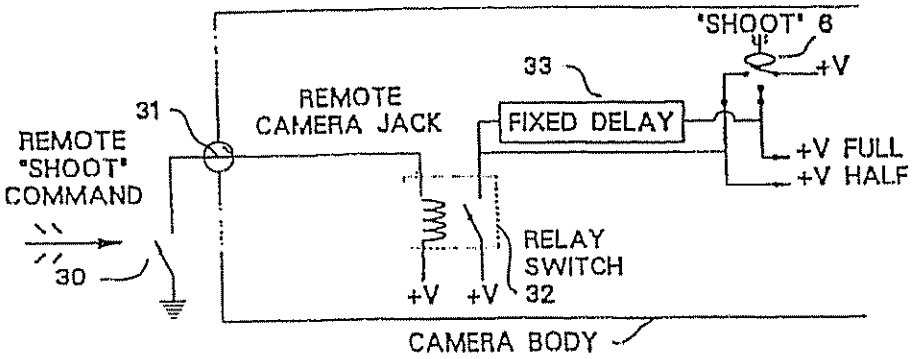
"SHOOT" 6
+V
33
31
REMOTE CAMERA JACK
FIXED DELAY
REMOTE "SHOOT" COMMAND
+V FULL
+V HALF
RELAY SWITCH 32
30
+V
+V
CAMERA BODY

FIG. 6C

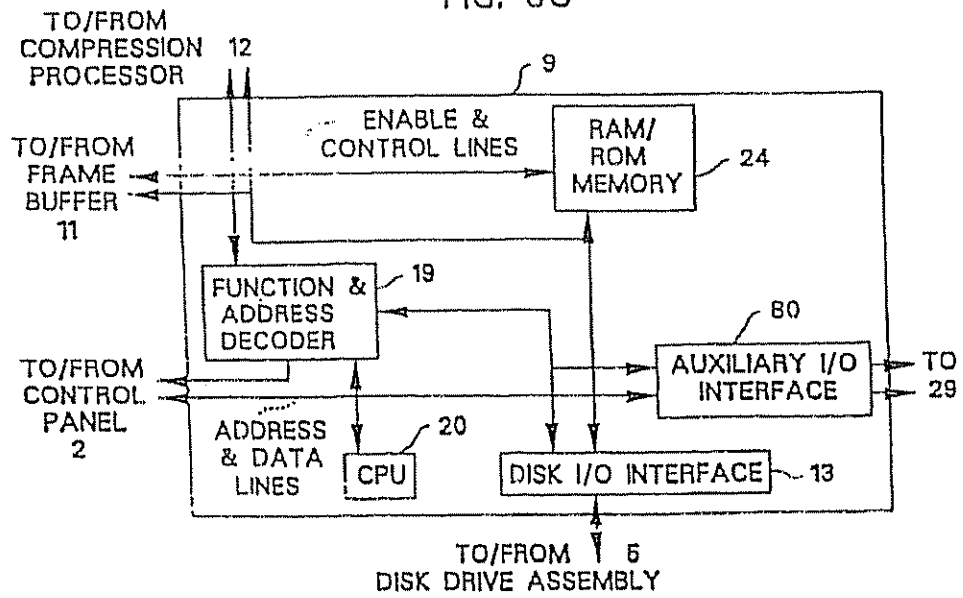
TO/FROM COMPRESSION PROCESSOR 12
9
ENABLE & CONTROL LINES
RAM/ ROM MEMORY 24
TO/FROM FRAME BUFFER 11
FUNCTION & ADDRESS DECODER 19
80
AUXILIARY I/O INTERFACE
TO 29
TO/FROM CONTROL PANEL 2
ADDRESS & DATA LINES
CPU 20
DISK I/O INTERFACE 13
TO/FROM 6 DISK DRIVE ASSEMBLY

FIG. 7

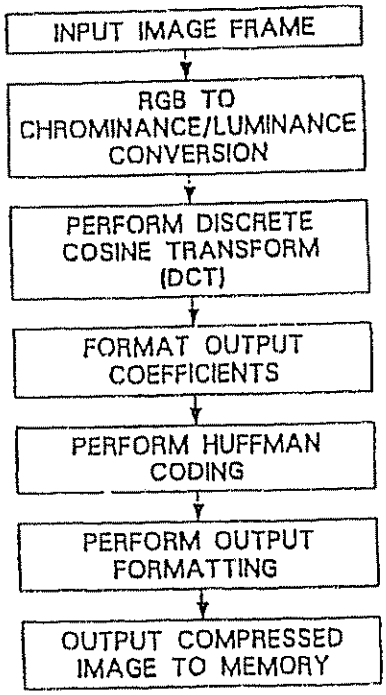

FIG. 8

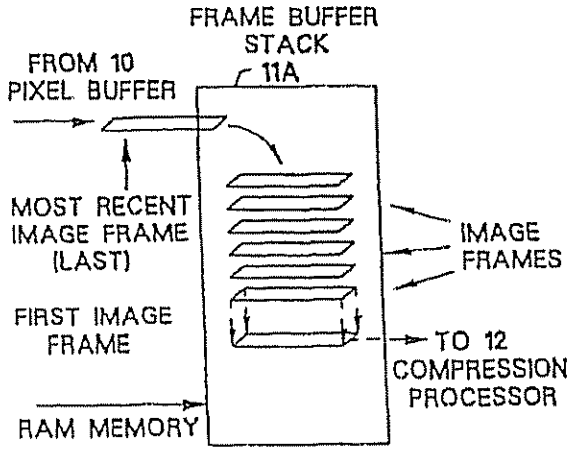

FIG. 13

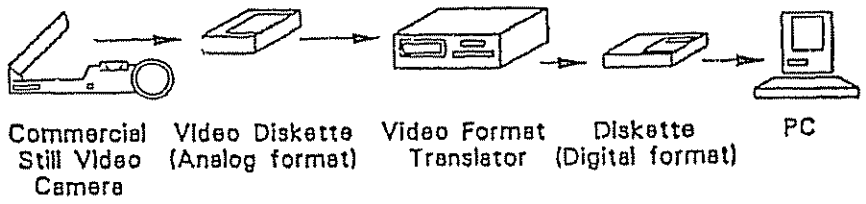

FIG. 10

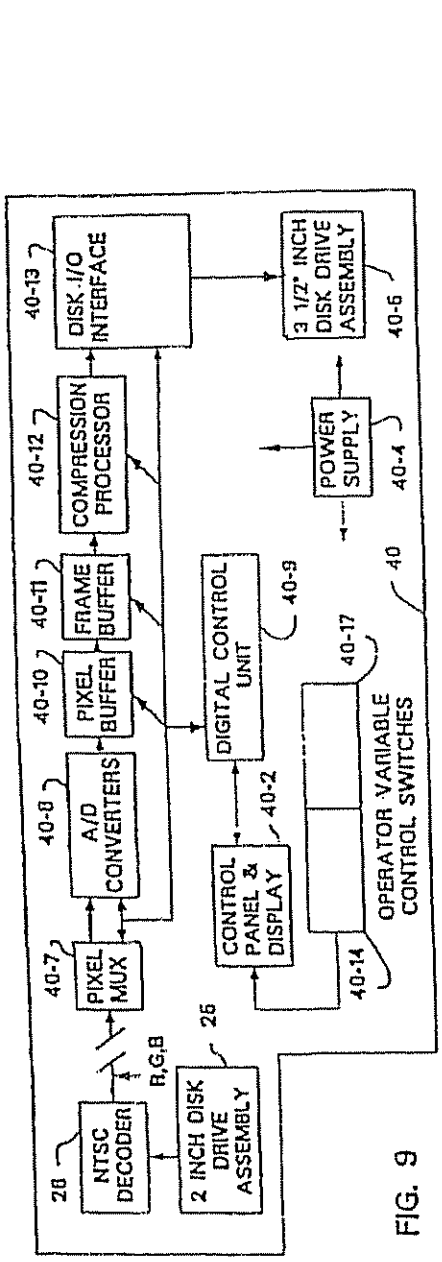
28
NTSC DECODER
R,G,B
40-7
PIXEL MUX
40-8
A/D CONVERTERS
40-10
PIXEL BUFFER
40-11
FRAME BUFFER
40-12
COMPRESSION PROCESSOR
40-13
DISK I/O INTERFACE
26
2 INCH DISK DRIVE ASSEMBLY
CONTROL PANEL & DISPLAY
40-2
DIGITAL CONTROL UNIT
40-9
40-17
OPERATOR VARIABLE CONTROL SWITCHES
40-14
40
POWER SUPPLY
40-4
3 1/2" INCH DISK DRIVE ASSEMBLY
40-6

FIG. 9

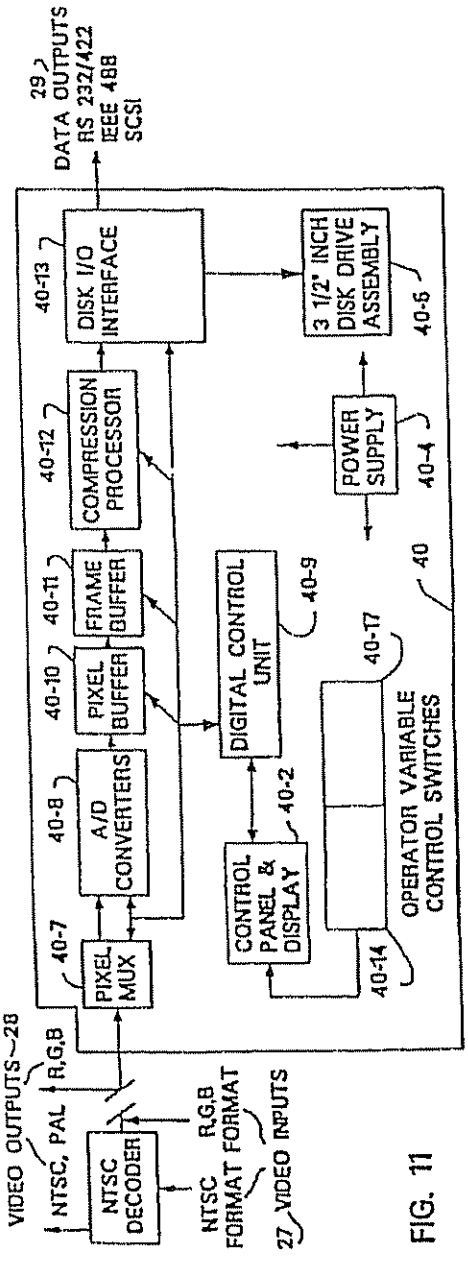
29
DATA OUTPUTS RS 232/422 IEEE 488 SCSI
VIDEO OUTPUTS
28
NTSC, PAL
R,G,B
NTSC DECODER
NTSC FORMAT
R,G,B
27 VIDEO INPUTS
40-7
PIXEL MUX
40-8
A/D CONVERTERS
40-10
PIXEL BUFFER
40-11
FRAME BUFFER
40-12
COMPRESSION PROCESSOR
40-13
DISK I/O INTERFACE
CONTROL PANEL & DISPLAY
40-2
DIGITAL CONTROL UNIT
40-9
40-17
OPERATOR VARIABLE CONTROL SWITCHES
40-14
40
POWER SUPPLY
40-4
3 1/2" INCH DISK DRIVE ASSEMBLY
40-6

FIG. 11

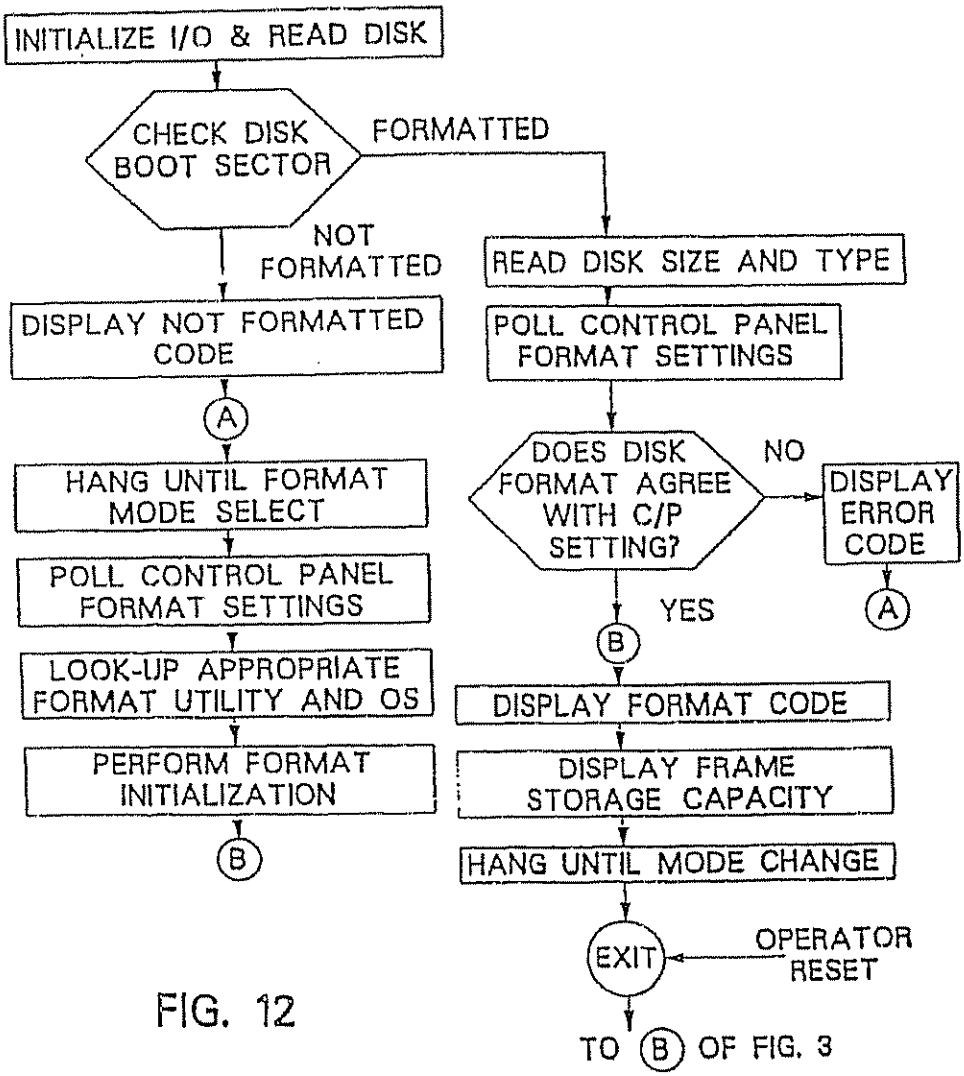
INITIALIZE I/O & READ DISK
CHECK DISK BOOT SECTOR
FORMATTED
NOT FORMATTED
READ DISK SIZE AND TYPE
DISPLAY NOT FORMATTED CODE
POLL CONTROL PANEL FORMAT SETTINGS
A
DOES DISK FORMAT AGREE WITH C/P SETTING?
NO
DISPLAY ERROR CODE
A
HANG UNTIL FORMAT MODE SELECT
YES
B
POLL CONTROL PANEL FORMAT SETTINGS
DISPLAY FORMAT CODE
LOOK-UP APPROPRIATE FORMAT UTILITY AND OS
DISPLAY FRAME STORAGE CAPACITY
PERFORM FORMAT INITIALIZATION
HANG UNTIL MODE CHANGE
B
EXIT
OPERATOR RESET
TO B OF FIG. 3

FIG. 12

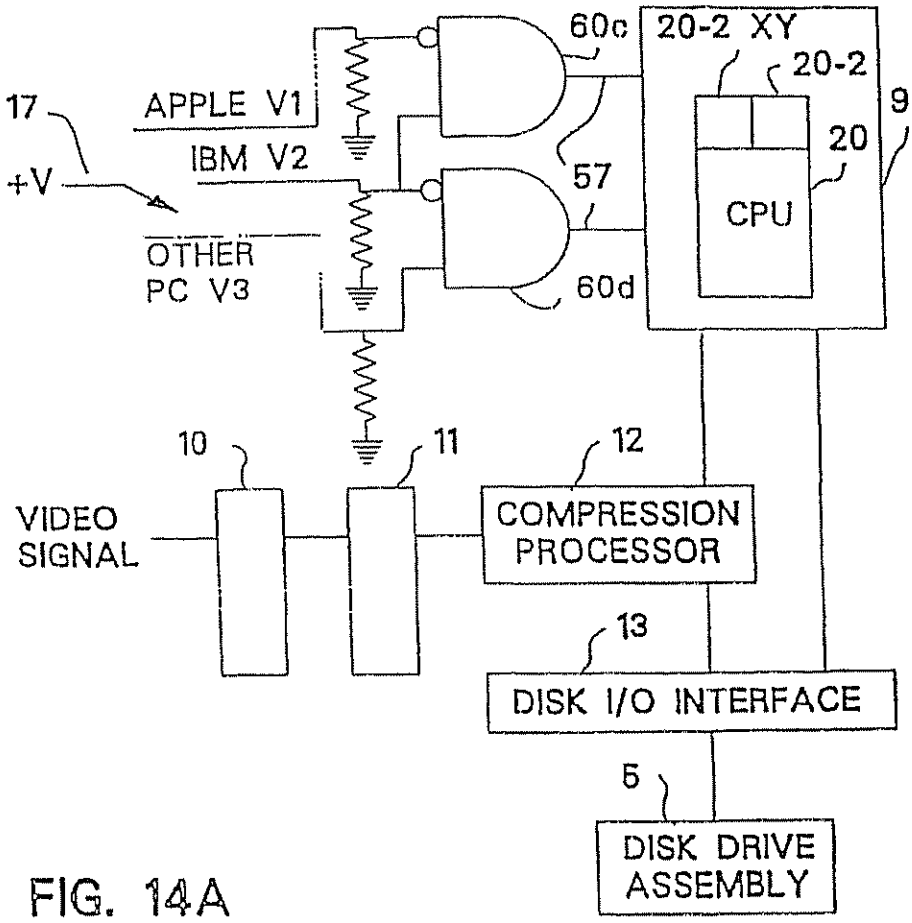
17
+V
APPLE V1
IBM V2
OTHER
PC V3
60c
57
60d
20-2 XY
20-2
20
CPU
9
10
11
12
VIDEO
SIGNAL
COMPRESSION
PROCESSOR
13
DISK I/O INTERFACE
5
DISK DRIVE
ASSEMBLY

FIG. 14A

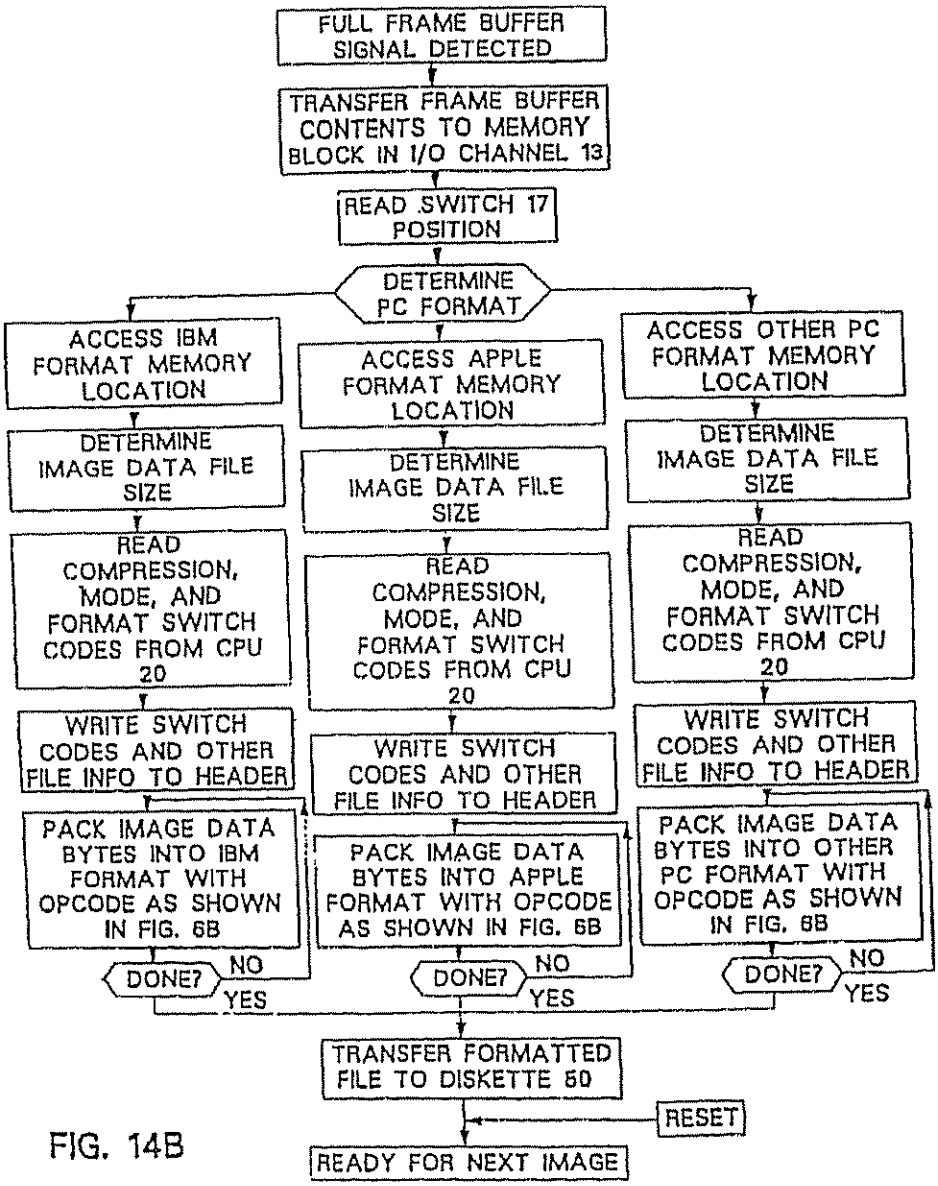
FULL FRAME BUFFER SIGNAL DETECTED
TRANSFER FRAME BUFFER CONTENTS TO MEMORY BLOCK IN I/O CHANNEL 13
READ SWITCH 17 POSITION
DETERMINE PC FORMAT
ACCESS IBM FORMAT MEMORY LOCATION
ACCESS APPLE FORMAT MEMORY LOCATION
ACCESS OTHER PC FORMAT MEMORY LOCATION
DETERMINE IMAGE DATA FILE SIZE
DETERMINE IMAGE DATA FILE SIZE
DETERMINE IMAGE DATA FILE SIZE
READ COMPRESSION, MODE, AND FORMAT SWITCH CODES FROM CPU 20
READ COMPRESSION, MODE, AND FORMAT SWITCH CODES FROM CPU 20
READ COMPRESSION, MODE, AND FORMAT SWITCH CODES FROM CPU 20
WRITE SWITCH CODES AND OTHER FILE INFO TO HEADER
WRITE SWITCH CODES AND OTHER FILE INFO TO HEADER
WRITE SWITCH CODES AND OTHER FILE INFO TO HEADER
PACK IMAGE DATA BYTES INTO IBM FORMAT WITH OPCODE AS SHOWN IN FIG. 6B
PACK IMAGE DATA BYTES INTO APPLE FORMAT WITH OPCODE AS SHOWN IN FIG. 6B
PACK IMAGE DATA BYTES INTO OTHER PC FORMAT WITH OPCODE AS SHOWN IN FIG. 6B
DONE?
NO
YES
DONE?
NO
YES
DONE?
NO
YES
TRANSFER FORMATTED FILE TO DISKETTE 50
RESET
READY FOR NEXT IMAGE

FIG. 14B

DIGITAL CAMERA WITH MEMORY FORMAT INITIALIZATION

This is a continuation of U.S patent application Ser No 09/253,831, filed Feb 19, 1999, now U S. Pat No 6,233,010 which is a continuation of Ser No 08/712,493, filed Sep. 11, 1996, pending which is a continuation of Ser No 08/098,787, filed Jul. 29, 1993, now U S Pat No 5.576,757, which is a continuation of Ser No 07/878.603, filed May 5. 1992, now abandoned, which is a continuation of Ser. No. 07/615,848, filed Nov 20, 1990, now U S Pat No 5,138.459

BACKGROUND OF THE INVENTION

1 Field of the Invention

This invention generally relates to an electronic still video camera and in particular to an improved electronic still camera which converts a still picture of an object or scene into an operator selectable compressed digital signal format for storage utilizing a compression/decompression algorithm, such as the Joint Photographic Experts Group (JPEG) algorithm standard for example, formatted into Personal Computer (PC) compatible format retaining the images' color information, and stored on a PC compatible memory diskette For example, the diskette can be a three and a half (3½) inch digital diskette. The digital diskette is removeable from the electronic camera for direct insertion into a PC which contains the previously loaded corresponding decompression algorithm whereby the digital image is in a format compatible for immediate use with word processing desk top publishing, data base, and multi-media applications

2. Description of the Prior Art

FIG 1 is a schematic block diagram showing structure of a conventional prior art electronic still camera system, in which a CCD image sensor element 1*a* converts a still image of an object into an analog color video signal when the shutter control circuitry 2*a* is activated. The output color video signal of the image sensor element is then muted to the signal processing subsystem 3*a* where the signal is converted to National Television System Committee (NTSC) or other composite video formats (such as the European video standard Phase Alternating Line-PAL) and logged in analog format onto a mass memory storage device such-as an analog video floppy disk, Electrically Erasable Programmable Read Only Memory (EEPROM), analog audio cassette, bubble memory, or other storage device 5*a* Power is supplied by a rechargeable/removeable battery system 4*a*

An electronic camera that converts an image into electronic image signals and transferred to a memory storage device is disclosed in the following U S Pat. Nos. 4,131.919; 4,456.931; 4,758,883; 4,803,554; and 4,837,628

Conventional prior art electronic still cameras, for example of the types disclosed in the aforementioned references, produce an electronic signal corresponding to a desired image in analog format such as the National Television System Committee (NTSC) or similar on magnetic or electronic storage media for either permanent or temporary storage to facilitate viewing on a television or video monitor With the current state of the art, it is expensive and time consuming to convert the analog image equivalent to a digital format for direct utilization with PC software applications Currently, to convert an image captured on an electronic still camera to a PC compatible format one must convert the signal back to either a composite-NTSC or ROB video signal and use a conversion device such as a "frame grabber" (a digital circuit board installed into PCs that convert video images into PC compatible formats) of the type sold commercially by Aapps Corporation, Orange Micro, RasterOps, and others or convert the image to a hard-copy print (a photograph) and utilize an electronic "scanner", a piece of equipment that connects to a PC, which converts an image into a digital format The later technique is employed extensively within the desktop publishing industry

SUMMARY OF THE INVENTION

It is the object of this invention to provide an improved electronic still camera with operator selectable picture compression in one of a plurality of operator selectable digital data formats recordable on a standard removeable magnetic diskette common to personal computers

It is a further object of this invention to provide an improved electronic still camera that provides digital image files for immediate and direct incorporation into popular word processing, desktop publishing, and other software programs on PCs

It is another object of this invention is to provide an improved electronic still camera that, under user selection, can record and store still images selectively compressed in a directly insertable digital memory storage device into a PC in either color or black and white formats thus facilitating storage of a large number of images with the signal flag indicating the degree of compression selected by the operator as well as the color/black and white mode selection being stored as digital values on the digital memory storage device with each image frame

An additional object of this invention to provide an electronic still camera device that can rapidly capture a series of images automatically as well as singularly. Also, this camera provides multiple outputs in both video format for monitor and display of images and digital formats to facilitate data transmission, additional processing, or storage to a variety of storage media

It is still another object of this invention is to provide a more efficient electronic still camera that can take a still picture with operator selectable high, medium, or low resolution in either color or black and white by electronic shutter and exposure control by utilizing a variety of electro-optical sensors including Charge Coupled Devices (CCD), Infrared (IR), and Ultra Violet (UV) which can be directly or remotely controlled by analog, digital, or radio frequency (RF) control signals

A further object of this invention is to provide a programmable video picture translator device for efficiently converting electronic still images in analog composite video format into digital data format readable by a PC This translator device also provides additional video inputs and outputs for capturing video images monitoring video images on monitors and displays, and can transmit either compressed or unprocessed digital image data through a variety of output I/O channels in various formats such as serial, parallel, etc Also, this invention can incorporate sound/voice with images thru additional interface circuitry and audio digitizers

Finally, it is the object of this invention to provide an electronic still camera that is efficient in design and permits extended periods of portable operation and which provides the user with operational status through the use of continuous internal self-test software routines and operator displays

BRIEF DESCRIPTION OF THE DRAWINGS

FIG 1 is a schematic block diagram of a conventional prior art electronic still camera

FIG 2 is a schematic block diagram of the of the overall structure of an electronic still camera embodying the present invention

FIG 2A is an illustration showing one embodiment of an audio data file, data format flag, compression level, and color/black and white mode selection values stored on a digital memory diskette storage device

FIG 3 is a flowchart showing the power-up and continuous self-test sequence in accordance with one aspect of the present invention

FIG 4 is an example of a ½" CCD array utilizable in accordance with one aspect of the present invention

FIG 5A is a schematic block diagram showing the image signal to digital signal conversion logic in accordance with one aspect of the present invention

FIG 5B is a logic and timing diagram for the image signal to digital signal conversion logic in accordance with one aspect of the present invention

FIG 6 is an example of the control panel logic in accordance with one aspect of the present invention

FIG 6A is an example of one embodiment of switch logic of the control panel switches and controls utilizable in accordance with one aspect of the present invention

FIG 6B is an example of the PICT image file format based upon the published standard provided by Apple Computer, Inc

FIG 6C is an alternate embodiment of the current invention embodying remote operation

FIG 7 is a simplified block diagram of the digital control unit in accordance with one aspect of the present invention

FIG 8 is a flowchart showing the steps of the image compression algorithm in accordance with one aspect of the present invention

FIG 9 is a block diagram of a video format translator device in accordance with one aspect of the present invention

FIG 10 is a block diagram illustrating the operation of a translator device in accordance with one aspect of the present invention

FIG 11 is an alternative embodiment of the video format translator in accordance with another aspect of the present invention showing additional video inputs and data outputs

FIG 12 is an alternate embodiment of the invention showing an optional diskette format utility flowchart

FIG 13 is an alternate embodiment of a frame buffer utilizable in accordance with another aspect of the present invention showing a frame buffer stack permitting multiple shot mode

FIG 14A is a block diagram of an embodiment of the format select logic in accordance with one aspect of the present invention

FIG 14B is a flow diagram illustrating the steps of the format selection logic operations

DESCRIPTION OF THE PREFERRED EMBODIMENT

FIG 2 is a schematic block diagram of the preferred embodiment of an electronic still camera in accordance with the principals of the invention Referring to FIG 2, an image optical pick-up element 1, which for example could be a Charge Coupled Device (CCD) (or an Infrared (IR) or Ultraviolet (UV) sensor), converts a still image of an object into an electric signal when a picture "shoot" command is initiated by the operator via control panel 2 When taking a picture, focusing and shutter speed are controlled by a lens system and shutter speed selection mechanism under control of the digital control unit 9. The camera, like other still video cameras, employs an electronic shutter system that controls a charge storage time in a CCD array onto which an image of an object is focused through the lens system

When the "shoot" control 6 is half depressed (see FIG 6), a power supply voltage is supplied from the rechargeable batteries 4 to the electronic circuits and digital control unit 9, control panel 2, and the disk drive assembly 5. The exposure control circuitry not shown generates appropriate horizontal and vertical transfer pulses as well as field shift pulses under control of the reference clock timing and control signals provided by the digital control unit 9 type for driving the CCD device and pre-processing circuitry This design may be of any type well known in the art for example those cited in U S Pat Nos. 4,131,919 and 4,456,931 and any similar designs well known in the prior art.

An alternate embodiment of the present invention that provides remote operation of the camera is shown in FIG 6C. When remote "Shoot" control 30 is activated by any means for example manually, or by radiant, or electronic energy, a control signal is generated and routed through the external jack 31, located on the external camera body The external control 30 is electrically connected to the external jack 31 by a twisted-pair conductive cable assembly that is familiar to those skilled in the art Upon receipt of the externally generated "shoot" command, the relay switch 32 is activated and provides internal switch closure. This closure of switch 32 then initiates the process previously described and provides the half V+ voltage previously described The full V+ is provided via the fixed delay 33, the value chosen to allow the diskette drive assembly 5 (FIG 2) and associated control circuitry to initialize prior to receiving image data

When the "shoot" control is fully depressed in either embodiment, the shutter controller 15 (FIG. 6) generates a shutter pulse that generates control signals for the A/D converters 8 allowing the image/picture data signal in the sample and hold circuitry of the pixel multiplexer 7 to be converted into a digital signal Control and address instructions of the type well known in the art are generated from the digital control unit 9 to facilitate the storage of the digital image data within the pixel buffer 10 and frame buffer 11 Upon completion of image conversion, the contents of the frame buffer are transferred to the compression processor 12 which for example may be of the many versions currently offered commercially such as C-Cube's (San Jose, Calif) four chip Application Specific Integrated Circuit (ASIC) set In the compression processor 12, the Joint Photographic Experts Group (JPEG), a part of the International Standards Organization (ISO) which is a subset of the International Telegraph and Telephone Committee (CCITT), image compression algorithm fully described in Report #JTC1/SC2/WG8 dated 1985 is performed under control of the digital control unit 9 to compress the size of the image. A variable selectable compression ratio of up to 50:1 is performed on the digital image frame Other compression ratios are operator selectable via the control panel 2 switches 14A and 14B (FIG 6) The compressed digital frame is then formatted into either an IBM PC/Clone (such as GIFF) or Apple Macintosh (such as PICT II) image file format depending on the setting selected by the operator for a user switch 17 (FIG. 6) position on the control panel 2 After formatting, the file is written into a temporary memory buffer within the disk input output (I/O) interface circuit 13 which, under the

command of the digital control unit 9 controls the high density (1 4 Mbyte storage capacity) disk drive unit 5 Following file transfer to the diskette e g , the frame counter display 22 on the control panel 2 is updated by appropriate control signals and the camera is ready to undergo the same procedure for the next image Power to the electronic circuits and disk drive system is terminated following release of the "shoot" control switch 6

In accordance with the preferred embodiment of this invention, it is permissible for the user to select various resolution quality image recording levels with the higher levels being at the expense of memory diskette storage capacity The position of switches 14A and 14B for example could represent a unique digital mark or word that denotes the respective switch position and is sensed during initial power application and periodically during operation FIG. 6A illustrates typical logic AND gate circuits 60*a* and 60*b* utilizable in conjunction with switches 14A and 14B or switch 17 to generate appropriate signals to designate respective switch positions and generate appropriate control signals from The switch positioned in the High position for high resolution allows only four to five images to be stored, while Med, switch position for medium resolution allows approximately twenty five images to be stored, and Low for low resolution allows up to fifty images to be stored on a single diskette Also, by selecting black and white mode instead of color via switch 14B, the operator may select additional storage capacity since storage is increased by a factor greater than three (one element per pixel versus three for color) Various image resolution combinations are permissible because the operator can select a different resolution and mode setting for each image prior to image signal capture. This is accomplished by marking or "tagging" each image frame data information signal with the resolution and mode of each image as it is written onto the memory diskette in any suitable manner, for example as shown in FIG 2A With reference to FIG 2A, diskette 50 has tracks 51*a*, 52*b*, 52*n*. With reference to track 52*b* there is shown a representative portion of segment 53 depicting a typical image file information format having digital bit 54 depicting color mode, and digital bits 55 representing compression resolution level markings or tags. With reference to color mode tag 54 it can be seen that if switch 14B is in the color position tag 54 is recorded as a logical "one" or true- conversely if bit 54 is recorded as a logical "zero" it corresponds to the black and white position of switch 14B Similarly as shown switch 14A would record in memory position 55 a binary "zero" for low resolution, a binary "one" for medium resolution and a binary "two" for high resolution selections by the operator. By incorporating this "tagging" approach, it is possible for the decompression algorithm, loaded into any PC prior to use or written onto the memory storage diskette along with the image data to automatically determine the appropriate level of compression associated with image file and execute decompression efficiently

Still another alternate embodiment in accordance with this invention incorporates an acoustic digitizer circuit which digitizes sound There are several digitizers commercially available such as the Apple Computer Inc. Musical Instrument Data Interface (MDI) adaptor. The output of this digitizer may be selectively connected to the CPU 20 (FIG 7) via an additional I/O interface similar to the auxiliary I/O interface 80 The sound or audio associated with each image can be recorded, digitized, and stored on the diskette device on available tracks in an identical manner previously described (FIG 2A) An image file in accordance with this embodiment would be appropriately marked or tagged with the corresponding digitized audio file 56 (FIG 2A) Upon playback on a sound configured PC, both the image and the corresponding audio would then be viewed and heard simultaneously

It should be noted that a major advantage a camera in accordance with the present invention has over conventional still video cameras is that a camera according to this invention is capable of storing multiple digital images in semiconductor memory temporarily at a rapid rate while, simultaneously, the image compression processor 12, file formatter software algorithm and disk I/O interface 13 that stores formatted files continue to function in concert together at a slower rate. This efficient design coupled with VLSI low power, high speed semiconductor memory devices (10 & 11 FIG 5A and 24 FIG. 7) allows this operational capability

Like most other still video and conventional film cameras, when the "shoot" control 6 (FIG 6) is fully depressed, a control signal is generated from the digital control unit 9 that generates a trigger signal on the control panel 2 to cause a flash unit 16 (FIG 6) to irradiate a flash of light onto the subject image

During initial camera operation, the user first inserts a diskette such as a standard three and a half inch or similar storage medium Various memory diskette sizes and formats are suitable for the invention However, for the preferred embodiment either a double-density (800 Kbytes of storage) or a high-density (1 4 Mbytes of storage) diskette in a three and a half inch format which are readily available from various commercial sources such as Sony, Maxell, and Verbatim. The user must then select the desired PC format (IBM PC/Clone or Apple Macintosh, etc) via switch 17 (FIG 6) on the control panel 2 As shown in FIG 3.; after turning on the power switch or inserting a diskette 50, the digital control unit 9 performs a self test of all internal circuitry, battery, disk drive unit, and control panel. Should any failures be detected, an appropriate error indicator is illuminated on the control panel During the power-one sequence (see FIG 3 and FIG 12), the inserted diskette 50 is automatically checked for formatting consistencies in accordance with the format selected by the format switch 17 on the control panel 2 (IBM/Apple/etc) and for available storage space by checking the boot block on the diskette, a technique that will be familiar to those skilled in the art Should any inconsistencies be detected, an error indicator is illuminated on the control panel (ie. disk full, unformatted, etc.) The operator frame counter display 22 (FIG 6) is then updated to show the maximum number of pictures available based upon indicated operator selections (color/black and white), diskette type (double versus high density), and capacity (partially full versus empty diskette) During operation, the operator can selectively erase a frame and record over it if desired by selecting the erase mode of operation from the control panel and toggling the forward/reverse control

The optics for the preferred embodiment of the invention is a commercially available one-half inch (½") color CCD device having a pixel grid array of 780×488 as pictorially depicted in FIG 4 This results in 380,640 pixel elements which results in a commercially acceptable quality resolution image as will be understood by those skilled in the art In a color imaging device (CCD array) photoelectric elements, such as photodiodes, are arranged in a two dimensional array with optical filters for R (red), G (green), and B (blue) Various arrangements of optical filters are well known and the arrangement of optical filters is not limited to

a particular one with this invention During operation each pixel stores a charge corresponding to the amount of incident light. The RGB components of each pixel's charge is sequentially read out via a horizontal/vertical addressing scheme that will be familiar to those skilled in the art

As shown in FIG 5A; each charge, when addressed, is amplified and processed in a sample and hold (S/H) circuit 18 The analog voltage in each S/H circuit is digitized by an associated analog to digital (A/D) converter 8 The digital values are routed and collected in the pixel buffer 10 Following completion of discrete pixel element conversion and subsequent formatting in the pixel buffer which is under Control Processor Unit (CPU) 20 software control, the output of the full pixel buffer is routed to the frame buffer 11 by digital control unit 9 This process continues until a complete frame is collected within the frame buffer The general digital logic and timing and control signals for this circuitry is shown in FIG 5B The timing is provided by a master clock that is an integral part of the CPU microprocessor For example, the MOTOROLA 68040 microprocessor has a clock speed of approximately 40 Megahertz (MZ which results in a clock period of 25 nanoseconds (nsec) This clock pulse is used by the function and address decoder 19 (FIG 6) to generate the address and control signals shown in FIG 5B as would be understood by those skilled in the art The circuit of the present invention may be designed by one skilled in the art to function with a variety of microprocessor architectures and is not limited to any one in particular. One can see from the timing chart that the S/H circuit is allowed (via the SE command) to charge to a voltage level indicative of the analog voltage impinging upon the pixel element (via the PS command) After a fixed time period, the A/D converters are enabled(via the CE command) to begin conversion of the analog voltage value on the S/H Upon completion of conversion a conversion completion signal (CC) is generated by the A/D and routed back to the S/H circuit (via the SC command which is generated by the function and address controller 19) to discharge the stored analog voltage in anticipation of the next pixel element conversion process Next, the output of the A/D converter 8 is clocked into the pixel buffer 10 (via the PB command) When the pixel buffer 10 is full, the output is clocked out to the frame buffer 11 (via the FB command) and the pixel multiplexer address circuitry selects the next pixel for conversion Reset signals (RST) are sent to all circuit elements to allow these devices to reset prior to receiving the next analog value

Another novel concept of the present invention as illustrated in FIGS 5A and 5B utilizes a technique of paralleling the S/H and A/D devices for each pixel element thus accelerating the image signal analog-to-digital conversion process This is accomplished by eliminating the serial S/H and A/D path typical of prior art still video camera designs In addition, high-speed, low-power devices available from Sony, Burr-Brown, Datel, Analog Devices, and others facilitate the increased conversion throughput of the S/H and AID circuits with pixel conversion times of less than 150 nanoseconds (nsec) For example, Sony's video A/D converter Device part number CXA 1016P/K performs up to 50 million samples per second or 20 nsec per conversion. This device, or similar, may be used in the preferred embodiment of the present invention As explained previously, prior art still video camera designs multiplex each signal component into a common/singular A/D path to reduce the number of components and power consumption However, in accordance with another aspect of the present invention components such as CMOS and ECl devices coupled with miniaturized packaging techniques such as surface mount devices (SMD) and ASIC technology make it feasible to incorporate these devices in a parallel design in order to realize a substantial increase in conversion speed with no appreciable increase in power consumption Therefore, this design approach provides significant conversion throughput increases over previous designs

The extremely high conversion speed in accordance with another concept of the present invention makes multiple high-speed camera operation possible in an alternate embodiment. For example, total conversion time required for the aforementioned CCD array utilizing the circuit of the present invention (FIG 5A) requires approximately 380, 640x150 nsec or 38 milliseconds (msec) Additional time (approximately 5 msec) is required for timing and control signal latency Thus, total conversion time for a complete image frame prior to compression processing and logging to the memory storage diskette 50 is less than fifty msec This allows for approximately 20 images to be captured in a one second period By adding additional RAM 11A (FIG 13) or other forms of commercially available random access memory to the frame buffer 11, image frames could be "pushed" onto a semiconductor memory stack for temporary storage allowing the compression processor and data interface circuitry to perform their respective functions at a slower rate. As shown in FIG. 13, each unprocessed image frame would be recorded or "pulled" from the stack on a "First-In, First-Out" (FIFO) manner until all images in the stack queue were processed and written to the storage diskette via the disk I/O circuitry 13

As shown in FIG 6, control panel settings are monitored by the CPU 20, a microprocessor, thus allowing the appropriate timing, control, and signal processing to be effected properly The microprocessor 20 may be of the type 68040 manufactured by MOTOROLA, Intel's 80386 series, or equivalent microprocessors which specifications are commercially available and are incorporated herein by reference The microprocessor utilization of this invention, which is in the digital control unit 9, transmits commands and status to specific controls, functions, and displays in the control panel as well as receiving both circuit status/control data and operator commands through polling the operator switch settings 14A, 14B, and 17 via the bidirectional function and address decoder 19 This approach allows the user to know immediately how much storage capacity remains in the image storage diskette 50 as well as the camera's overall operational and functional status through the use of status displays 21, 22, and 23 and ongoing software self-tests running in the background as depicted in FIG 3 An example of this would be a low battery situation. First, the digital control unit 9 would detect a failure in the self-test mode Next, the self-test light emitting diode 21 (FIG 6) would be illuminated and an appropriate error display would be illuminated in the status display 22 thus providing the user with an exact indication of the error Another example illustrating the operation of this embedded microprocessor type of control approach is the format switch 17 (FIG 6) The position of the format switch 17 is sensed upon power application Following diskette insertion, the boot block on the diskette is compared with the format switch 17 setting (IBM/clone or Apple) and if the format does not match or if the disk 50 is unformatted, the disk format status light emitting diode 23 would be illuminated and an appropriate error display would be illuminated in the status display 22 thus prompting the user to take appropriate corrective measures

An alternate embodiment of the present invention involves adding an auxiliary I/O interface circuit or port to

the digital control unit 9 As shown if FIG 7, the auxiliary I/O port 80 connects in a manner similar to the Disk I/O interface 13 This additional I/O channel provides for external control and monitor of all timing and control signals internal to the camera In addition it allows for the image data to be routed past or around the compression processor out to any additional internal or external device such as an optical disk storage device, digital analyzer, or other data processors that might be desired

FIG 7 shows the digital control unit 9 The microprocessor 20 architecture here is typical to one familiar with the art The frame buffer 11 (FIG 5A) receives and stores the outputs of the pixel buffer 10 until a complete frame of image data is received Then, the CPU 20, under software control, issues a control signal to the optics logic in the shutter and control circuitry 15 (FIG 6) thus resetting those functions for future image recording The full frame buffer 11, upon command from the CPU 20, transfers it's data into the compression processor 12 (FIG 2) which performs thousands of levels of parallel pipeline processing on the image data The compressed image frame is then written out to the mass memory RAM (Random Access Memory) 24 where it is temporarily stored until transferred to the disk drive assembly 5 via the disk I/O interface circuitry 13

Referring to FIG 8 a flowchart shows the steps involved in the image compression process performed by the image compression processor 12 (FIG 2) in accordance with the preferred embodiment of the present invention The output of the frame buffer 11 is transferred into the input of the image compression processor 12 under the control of the digital control unit 9. As previously described, the setting of switch 14A (FIG 6) is read by the CPU 20 (FIG. 7) to determine the image resolution quality desired Depending on the operator selected setting of switch 14A, the unique digital word generated by the AND gate 60a–b (FIG 6A) which is activated by the selected position of switch 14A is routed to image compression processor 12 via CPU 20 (FIG. 7) which selects for example a predetermined digital memory location containing the appropriate corresponding compression ratio parameters under program control The compression processor uses this command value for example to establish the size of the covariance matrix and a threshold for acceptance for the variances produced by the Discrete Cosine Transformation (DCT) transform coefficients Next, the digital image signals are converted from the RGB format previously discussed in connection with FIGS 2, 5, and 6 into luminance and chrominance signals The luminance and chrominance signals subsequently undergo a DCT The cosine transformed signals are then quantized and are then processed for Huffman coding The Huffman coded image signals are then formatted into a form that facilitates format processing into various PC compatible formats (GIFF, PICT2, etc) For a more complete understanding of the image compression process reference may be made to I E.E.E. Catalog No EH0231-1. Library of Congress No. 85-603B4 published by the I E E E Society dated 1985 and incorporated herein by reference

Of the two traditional classes of image compression techniques, spatial coding and transform coding, transform coding techniques lend themselves well for this application due to computational simplicity. Transform coding techniques that provide good visual fidelity include: Karhunen-Loeve transform (KLT). Fourier. cosine. sine. and Hadamard The KLT algorithm offers the best visual fidelity but suffers from serious computational complications due to extremely large matrix size Several alternate algorithms that offer reasonable visual fidelity that are computationally feasible for this invention include the Fast Fourier Transform (FFT), Discrete Cosine Transform (DCT). and Discrete Sine Transform (DST) The DCT was adopted by the JPEG as the preferred algorithm due to computational simplicity and performance

It should be noted that the Joint Photographic Experts Group (JPEG) (composed of experts from many companies including IBM, AT&T, Digital Equipment Corp, and INTEL) compression/decompression standard was developed in 1985 in response to the lack of interoperability between image and processing equipment due to numerous proprietary standards held by each manufacturer. The JPEG standard provides image compression effectively up to 75 times or greater depending on the visual fidelity desired The JPEG standard is widely used in industry as an alternative to proprietary algorithms such as Intel's own proprietary standard called DVI which was initially developed by RCA before being sold to INTEL, the integrated Circuit manufacturer INTEL offers it's own firmware compression processor incorporating their DVI standard delivering compression ratios in excessive of 100:1 However, a new international standard called MPEG is due to be announced in the 1991 time frame from the JPEG and should offer compression ratios of 275:1 and greater In the preferred embodiment of the present invention. the JPEG standard is the preferred algorithm chosen with the incorporation of the the MPEG standard or other similar standard in the future when available commercially An alternate embodiment of the present invention would be the incorporation of various proprietary compression algorithm standards such as DVI

The compression/decompression algorithm firmware implementation of the JPEG algorithm is available commercially from various sources including C-Cube, Electronics for Imaging, Storm Technology, Burr-Brown, Spectral Innovations Inc., INTEL, and others The implementation of this algorithm for the present invention may incorporate the integrated circuit set commercially available from C-Cube. Their four chip ASIC JPEG algorithm implementation is performed in three basic steps: first, the image is divided into 8-by-8 pixel squares and applies a discrete cosine transform (DCT) to each square resulting in 64 frequency values; second, these frequencies are put through a quantization algorithm to eliminate unimportant frequencies; third, the remaining values are run through a Huffman coding scheme to encode the most frequently occurring values using the fewest bits A compatible software implementation of the JPEG algorithm is available commercially from Aladdin Systems, Radius Inc . Kodak, and others

Those skilled in the art will be familiar with the process and the commercially available software and firmware chipsets that are currently available on the market The present invention incorporates both available firmware chipsets in the camera and software for use in the PC for decompression The decompression algorithm can be written onto the camera's diskette 50 prior to any image data recording This allows the PC user to take the diskette 50 to a PC and directly incorporate the image data because the image file selected by the user is automatically decompressed transparent to the user The algorithm can be written onto an unused track 52 or sector combination on the diskette as shown on FIG 2A. Alternatively, the decompression algorithm can be loaded onto a PC before inserting a diskette 50 containing compressed image data In the latter embodiment the resolution and mode values 54 and 55 (FIG. 2A.) for each representative image would be read from diskette 50 in order to appropriately control the selection and activation of the appropriate corresponding decompression algorithm

As shown in FIG 7, the output of the image compression processor 12 is routed to the RAM memory 24 where the compressed image is formatted for either the PICT II or GIFF format depending on the setting of format switch 17 (FIG 6). It should be noted that a large number of image formats for PCs exist. PICT and GIFF are the most common for the Apple and IBM PC's and are therefore the preferred formats for the present invention although other formats can be easily incorporated into the design by changing the software format routines These software image formats are commercially available from many sources most notably Apple computers for PICT and IBM for GIFF. An example of the PICT format is pictorially shown in FIG 6B as will be familiar to those skilled in the computer arts Once formatting is complete, the formatted image data is transferred to the disk I/O interface 13 for transfer to the magnetic recording diskette 50

FIG 9 and FIG 10 illustrate the preferred embodiment of the video format translator device in accordance with another aspect of this invention that converts other still video camera formats for example on two inch video diskette to this invention's selectable PC compatible digital format. The general concept of operation is shown in FIG 10 In FIG 9 correspond parts and subassemblies in translator 40 are shown with like numbers corresponding to FIG 2 and 6 having a 40 hyphenation prefix designation and such parts and subassemblies perform similar functions to those described above with reference to FIGS 2 and 6 Referring again to FIG 9, the translator 40 incorporates the same components utilized in the digital circuit card assembly which houses both the digital control unit 9 and optics processing circuits (pixel multiplexer 7, A/D 8, etc 10–13) The major difference is that the CCD array 1 is replaced with an input disk drive 25. for example a two inch (2") video disk drive assembly, and an NTSC video format decoder 26 which converts the composite video signal to an RGB format for processing as described previously

FIG 11 displays an alternate embodiment of the video format translator device 40 of the present invention that shows optional inputs 27 and outputs 28 and 29 The exact same circuitry is utilized that was used for the translator device 40 as shown in FIG. 9 except that inputs 27 for either an NTSC/PAL format or RGB format video signal is provided. This allows video signals from other sources such as a cable TV, CAMCORDER, or other video signal source to be digitized and archived in a PC compatible format Also provisions for video output jacks 28 are made to allow either viewing of the image/video source prior to or during image recording. Finally, provisions are made to provide a data output 29 to allow connection to other PC peripherals such as a communications modem, larger/smaller disk drive assembly, optical disk, specialty display or signal processor/analyzer Either a standard serial, parallel, or Small Computer Standard Interface (SCSI) data port can be readily connected to the auxiliary I/O interface 80

FIG 12 depicts an alternate feature of an embodiment of the present invention that shows how an inserted diskette 50 that is either unformatted or formatted for a undesired (e.g., not corresponding to the setting of switch 17—FIG 6) PC configuration would be automatically properly formatted for use with a camera in accordance with another aspect of this invention This capability allows the user of this invention to forego the requirement to pre-format the storage medium (diskette) on a PC prior to using it in the camera operated in accordance with the present invention With reference to FIG 3 the power-on sequence process would result in an abnormal diskette format error if the format of an inserted diskette 50 did not correspond to the operator selected format switch 17 (FIG 6). In accordance with the automatic diskette format option, CPU 20 of digital control unit 9 in response to the abnormal diskette format error would initiate the diskette format process illustrated in FIG 12 Upon completion of the diskette format process illustrated in FIG. 12, the power-on sequence illustrated in FIG 3 would continue from step B.

Referring now to FIG 14A, there is shown a schematic block diagram of the format selection logic in accordance with another aspect of the present invention During the power-on sequence as described in connection with FIGS 3 and 12, processor 20 of control unit 9 initiates a format selection switch sample and test routine as more fully described in the flow diagram illustrated in FIG 14B Switch 17 is illustrated in FIG 14A in the Apple PC position and logic level v1 is applied as inputs to logic gates 60c and 60d. As illustrated in FIG 2A, the format signals 57 for the Apple PC format is a logic "zero" and conversely the format signal or mag 57 if the format switch 17 were in the IBM PC or other computer type position would be a logic "one" and "two" respectively In response to the logic "zero" indicating Apple PC format, processor 20 accesses a unique memory location XY of format memory 20-2 which for example may comprise any random access memory with two megabytes storage capacity The data format for the operator selectable predetermined number of computer architectures, similar in content and arrangement to those illustrated in FIG 6B for an Apple PC would be stored in memory 20-2 which would be addressed in response to the other operator selectable position of switch 17 to generate the other unique codes 57 as shown in FIG 2A. Processor 20 in response to a stored format subroutine more particularly shown in FIG 14B contains the allocation of data memory addresses in disk input/output interface unit 13 in accordance with the picture image file format as illustrated in FIG 6B Thus the digital video data information signals generated by compression processor 12 are appropriately formatted and stored in memory storage disk drive 5 to insure compatibility with the format selected by the operator by selectively positioning switch 17

Those skilled in the art will recognize the many alterations, additions or changes of the preferred embodiment may be made without departing from the scope of the following claims

What is claimed is:

1. In a digital camera including a memory element for storing digitized image data, the improvement comprising:

memory formatting means for formatting the memory element for use with an information handling system utilizing the same memory element format; and

means for selecting a memory element format used In formatting the memory element from one of a plurality of different memory element formats

2. In a digital camera including a memory element for storing digitized image data, the improvement comprising:

means for checking a format of the memory element for agreement with a specific format;

means for formatting the memory element whenever agreement with the specific format is not found by the means for checking; and

means for selecting a specific format from one of a plurality of different specific formats

3 In a digital camera including a removably coupled memory element for storing digitized image data, the improvement comprising;

means for checking a format of the memory element for agreement with a particular format; and

means for selecting a particular format from one of a plurality of different memory element formats

4 In a digital camera including a removably coupled memory element for storing digitized Image data, the improvement comprising:

memory formatting means for formatting the memory element for use with an information handling system utilizing the same memory element format; and

means for selecting a memory element format used in formatting the memory element from one of a plurality of different memory element formats

5 For use in a digital camera utilizing an IBM compatible memory format, a method for changing the format of a digital storage medium formatted in an Apple compatible memory format to the IBM compatible memory format, comprising:

checking in the camera a boot area of the storage medium to determine if the storage medium Is formatted in the IBM compatible memory format;

providing a format error indication to an operator of the camera if the checking determines that the storage medium Is not formatted in the IBM compatible memory format; and

formatting the storage medium in the camera in the IBM compatible memory format in response to an operator control of the camera.

6 A method as in claim 5, wherein the storage medium is removably coupled to the camera

7 In a digital camera including a digital storage medium, the storage medium formatted for use with a first information handling system utilizing an Apple compatible memory format, the improvement comprising:

a control unit for formatting the storage medium for use with a second information handling system utilizing an IBM compatible memory format

8 In a digital camera including a digital storage medium, the storage medium formatted for use with a first information handling system utilizing an IBM compatible memory format, the improvement comprising:

a control unit for formatting the storage medium for use with a second information handling system utilizing an Apple compatible memory format.

9 In a digital camera utilizing an IBM compatible memory format, the improvement comprising:

a controller operative to change the format of a digital storage medium from an Apple compatible memory format to the IBM compatible memory format

10 A digital camera, comprising:

an assembly operative to receive a digital storage medium, the storage medium having a boot area including information identifying an Apple compatible memory format of the storage medium; and

a control unit operative to (a) check the boot area, and (b) format the storage medium in an IBM compatible memory format for use with the camera

11 For use in a digital camera, a method for changing the format of a digital storage medium from an Apple compatible memory format to an IBM compatible memory format, the method comprising:

determining in the camera if the storage medium is formatted in the IBM compatible memory format; and

formatting the storage medium in the camera in the IBM compatible memory format.

12 A process for use in a digital camera utilizing an IBM compatible memory format, comprising:

coupling a removable digital storage medium with the camera, the storage medium formatted in one of a plurality of memory formats;

determining in the camera if the storage medium is formatted in the IBM compatible memory format; and

formatting the storage medium In the camera in the IBM compatible memory format

* * * * *

EXHIBIT G

A 455549

THE UNITED STATES OF AMERICA

TO ALL TO WHOM THESE PRESENTS SHALL COME:

UNITED STATES DEPARTMENT OF COMMERCE
United States Patent and Trademark Office

August 27, 2001

THIS IS TO CERTIFY THAT ANNEXED IS A TRUE COPY FROM THE RECORDS OF THIS OFFICE OF A DOCUMENT RECORDED ON January 09, 1992.

By Authority of the
COMMISSIONER OF PATENTS AND TRADEMARKS

H. L. JACKSON
Certifying Officer

40.00-581

D

THE LAW OFFICES OF
ERIC P. SCHELLIN, P.C.
2121 CRYSTAL DRIVE
SUITE 704, TWO CRYSTAL PARK
ARLINGTON, VIRGINIA 22202
TEL (703) 521-1666

ERIC P. SCHELLIN
JOSEPH P. NIDON
GEORGE R. DOUGLAS
ROBERT F. CUSTARD

MAIL ROOM JAN 19 1992 PATENT & TRADEMARK OFFICE

January 8, 1992

FACSIMILE: (703) 979-1487

KEY WEST, FLORIDA OFFICE
(305) 296-2868

VICTORIA MESSENGER
MANAGER

PETER SCHELLIN
PATENT SEARCHER

Hon. Commissioner of Patents
and Trademarks
Washington, D.C. 20231

Attention: Assignment Branch

Re: U.S. Serial No: 07/615,848
Filed: November 20, 1990
Applicants: MARC K. ROBERTS ET AL
entitled: ELECTRONIC STILL VIDEO CAMERA WITH DIRECT PERSONAL COMPUTER (PC) COMPATIBLE DIGITAL FORMAT OUTPUT
Attorney's Docket: 101

REEL 5964 FRAME 504

Sir:

Enclosed herewith is an ASSIGNMENT for the above identified patent application to PERSONAL COMPUTER CAMERAS, INC. In addition, a check in the amount of $40.00 is enclosed which is the required fee.

Once the document is recorded please return to the above.

Respectfully submitted,

Eric P. Schellin, Reg. No. 18,449

EPS:vs
encl.

050 IP 01/15/92 07615848 I 581 40.00 CK

11607413

Whereas, Marc K. Roberts, Matthew A. Chikosky and Jerry A. Speasl

have invented certain new and useful improvements in Electronic Still Video Camera with Direct Personal Computer (PC) Compatible Digital Format Output for which they are made application for LETTERS PATENT OF THE UNITED STATES, which application has been duly executed by them on November 20, 1990

And Whereas, Personal Computer Cameras, Inc. McLean, Virginia 22103

hereinafter called the assignee, is desirous of acquiring the entire right, title and interest in and to said invention within the United States of America and its territorial possessions and all foreign countries and any United States or foreign LETTERS PATENT that may be granted therefor.

Now, this Indenture Witnesseth That for and in consideration of the sum of 10.00 Dollar, in hand paid to them and other good and valuable considerations, the receipt whereof is hereby acknowledged, they have assigned, sold and transferred, and do hereby assign, sell and transfer to the said assignee the entire right, title and interest in and to the said invention within the United States of America and its territorial possessions and all foreign countries, and in and to said application for LETTERS PATENT of the United States, and in and to all other applications for LETTERS PATENT for said invention in all other countries, and in and to all divisions and continuations of any of said applications, and in and to any LETTERS PATENT of the United States and foreign countries and all reissues and extensions thereof that may be granted, and the right to apply for LETTERS PATENT in foreign countries with full benefit of such priorities as may now or hereafter be granted to them by local laws or by treaty including any international convention, for the protection of industrial property, together with the right to extend the protection of said U. S. LETTERS PATENT to the various territorial possessions now owned or which may be hereafter acquired by the United States of America, all said rights to be held and enjoyed by the assignee for its own use and behoof, and for the use and behoof of its successors or assigns to the full end of the respective terms for which said LETTERS PATENT may be granted, as fully and entirely as the same would have been held and enjoyed by them if this assignment sale had not been made. And they do hereby request and authorize that any and all LETTERS PATENT, when granted, be issued in accordance with this assignment to the assignee

In further consideration of said sum of 10.00 Dollar, and said other good and valuable considerations, to them paid, they do covenant and agree with the assignee that they have full and unincumbered title to the invention hereby assigned, which title they warrant unto the assignee, and they further agree that they will, without demanding any further consideration therefor, at the request but at the expense of the assignee, do all lawful and just acts including the execution and acknowledgment of instruments, furnishing of information and giving of testimony, that may be or become necessary for obtaining, sustaining, or reissuing United States and foreign LETTERS PATENT for the said invention, and for maintaining and perfecting the assignee's right to said invention and LETTERS PATENT, particularly in cases of interference and litigation

In Testimony Whereof, I have hereunto set my hand and affixed my seal, this 27th day of 12/27/91, 19

Marc K. Roberts [SEAL]
Marc K. Roberts

Sealed and delivered in presence of
Jane Erinn Power

OFFICIAL SEAL
JANE ERINN POWER
NOTARY PUBLIC - CALIFORNIA
ALAMEDA COUNTY
My Comm. Expires Dec. 7, 1993

In Testimony Whereof, I have hereunto set my hand and affixed my seal, this 20TH day of DECEMBER, 19 91

Matthew A. Chikosky [SEAL]
Matthew A. Chikosky

Sealed and delivered in presence of
Madelyn Simpson

OFFICIAL SEAL
JANE ERINN POWER
NOTARY PUBLIC - CALIFORNIA
ALAMEDA COUNTY
My Comm. Expires Dec. 7, 1993

In Testimony Whereof, I have hereunto set my hand and affixed my seal, this 27 day of 12-27-91, 19

Jerry A. Speasl [SEAL]
Jerry A. Speasl

Sealed and delivered in presence of
Jane Erinn Power

REEL 5964 FRAME 505

STATE OF Calif }
Alameda } ss:

On this 27th day of Dec, 19 91 before me personally appeared Marc K. Roberts

to me known and known to me to be the individual described in and who executed the foregoing instrument, and he has acknowledged to me that he executed the same.

Jane Erinn Power
Notary Public.

[SEAL]

OFFICIAL SEAL
JANE ERINN POWER
NOTARY PUBLIC - CALIFORNIA
ALAMEDA COUNTY
My Comm. Expires Dec. 7, 1993

STATE OF Virginia }
} ss:

On this 30 day of December, 19 91 before me personally appeared Matthew A. Chikosky

to me known and known to me to be the individual described in and who executed the foregoing instrument, and he has acknowledged to me that he executed the same.

M a Delegn Dempsey
Notary Public.

[SEAL]

STATE OF Calif }
Alameda } ss:

On this 27th day of Dec, 19 91 before me personally appeared Jerry A. Speasl

to me known and known to me to be the individual described in and who executed the foregoing instrument, and he has acknowledged to me that he executed the same.

Jane Erinn Power
Notary Public.

[SEAL]

OFFICIAL SEAL
JANE ERINN POWER
NOTARY PUBLIC - CALIFORNIA
ALAMEDA COUNTY
My Comm. Expires Dec. 7, 1993

RECORDED
PATENT AND TRADEMARK
OFFICE

JAN -9 1992

REEL 5994 FRAME 506

Assignment

Marc K. Roberts

Matthew A. Chikosky

Jerry A. Speasl

Personal Computer

Cameras, Inc.

INVENTION:

Electronic Still Video Camera with Direct Personal Computer (PC) Compatible Digital Format Output

EXHIBIT H

101695

PATENT PURCHASE AGREEMENT

This Patent Purchase Agreement is made by and between St. Clair Intellectual Property Consultants, Inc., a corporation of the State of Michigan having offices at Suite Two, 16845 Kercheval Avenue, Grosse Pointe, Michigan (SCI) and Personal Computer Cameras, Inc. a corporation of the Commonwealth of Virginia, having offices at 10497 Chace Drive, Cupertino, California (PCC).

WHEREAS, PCC is the owner by assignment and otherwise of certain PCC PROPERTY (hereinafter defined);

WHEREAS, SCI desires to purchase said PCC PROPERTY from PCC; and

WHEREAS, PCC desires to sell and assign all right, title and interest in and to said PCC PROPERTY to SCI under the terms and conditions set forth below;

NOW, THEREFORE, in consideration of the premises and the mutual promises hereinafter recited, the parties hereto agree as follows:

1. DEFINITIONS

1.1 "PCC PROPERTY" as used herein shall mean:

A. United States Patent No. 5,138,459 ('459 patent), together with all divisions, continuations, continuations-in-part and reissues of the '459 patent, whether issued, pending, to be filed or to be issued, and all foreign counterpart patents, patent applications and utility models of the foregoing United States patents and patent applications (hereinafter collectively referred to as "PCC PATENTS"); and

DEPOSITION EXHIBIT 50 Defendants

CONFIDENTIAL

sticlair13251

PLAINTIFF
Trial Exhibit
STX 296
St. Clair v. Canon et al
03-cv-241

B. All trade secrets, know-how, copyrights, maskworks inventions, other intellectual property rights and proprietary technologies related to the PCC PATENTS, which trade secrets, know-how, copyrights, maskworks, inventions, other intellectual property rights and proprietary technologies are owned, assigned or licensed, in whole or in part, by or to PCC.

2. SALE AND ASSIGNMENT

2.1 Subject to the provisions of paragraphs 2.2, 2.3 and 3.1 below, PCC hereby sells, assigns, transfers and conveys unto SCI, its successors and assigns, all right, title and interest in and to the PCC PROPERTY, together with all claims, demands, or causes of action that PCC has or might have by reason of any infringement of the PCC PROPERTY prior to the Effective Date of this assignment, including the right to collect damages for such past infringement in the name of SCI.

2.2 Certain portions of the PCC PROPERTY have been licensed to some third parties prior to the Effective Date of this Agreement. The sale and assignment provided for in paragraph 2.1 above shall thus be subject to any existing license rights or releases granted under the PCC PROPERTY prior to the Effective Date of this Agreement, which existing license rights and releases shall be retained by the respective parties to whom such license rights and releases have been granted.

2.3 The assignment provided for in paragraph 2.1 above shall become effective on the Effective Date of this Agreement.

2.4 PCC shall execute all documents prepared and submitted by SCI to PCC which SCI reasonably deems necessary to effectuate fully the sale and assignment provided for in paragraph 2.1 above and to permit SCI to be duly recorded as the owner of the PCC PROPERTY.

2.5 SCI shall reimburse PCC for all out of pocket disbursements incurred by PCC in the handling and execution of any documents submitted to PCC for execution pursuant to paragraph 2.4 above.

2.6 Upon the Effective Date of this Agreement, SCI shall undertake full responsibility and shall pay all costs including without limitation, attorneys' fees and expenses for all preparation and filing of applications, prosecution, renewal, reissue and maintenance of the PCC PROPERTY. PCC shall cooperate with SCI in

the prosecution of the PCC PROPERTY as reasonably necessary, and PCC will provide SCI with copies of all invention disclosures, notebook entries or other documents evidencing the dates of conception of the inventions covered by the claims of the PCC PROPERTY.

3. PAYMENT

3.1 In partial consideration for the sale and assignment to SCI of PCC PROPERTY, and subject to the provisions of paragraph 7.1 herein, SCI agrees to do the following:

A. Pay to PCC the sum of Forty Thousand Dollars ($40,000.00) within forty-five (45) days after the Effective Date of this Agreement;

B. Assume full responsibility for the payment of an aggregate total of up to Twenty Thousand Dollars ($20,000.00) of fees, charges and costs billed to PCC by Christie, Parker and Hale for prosecution of the PCC PATENTS by Christie, Parker and Hale prior to Effective Date of this Agreement; and

C. Pay PCC, within thirty (30) days after SCI's receipt, fifty percent (50%) of all revenue received by SCI from the licensing or sale of any part or all of PCC PROPERTY to third parties, and fifty percent (50%) of all damages or settlements received by SCI in connection with enforcement of the PCC PROPERTY, after deducting:

i. Any reasonable outside legal fees, contingent fees, and litigation expenses incurred and paid by SCI in enforcing the PCC PATENTS after the Effective Date of this Agreement;

ii. Any fees or expenses incurred and paid by SCI for prosecution of the PCC PATENTS after the Effective Date of this Agreement;

iii. Any sums paid by SCI to Christie, Parker and Hale pursuant to paragraph 3.1(B) above;

iv. Any maintenance or annuity fees for the PCC PATENTS paid by SCI after the Effective Date of this Agreement; and

v. Any foreign withholding taxes associated with the licensing or sale of any part of all of PCC PROPERTY from which the respective revenue was collected by SCI.

3.2 PCC shall have the right upon notice, to examine or have examined from time to time, at PCC's expense, the applicable books, records and agreements relating to such transactions in order to verify the accuracy of such reports. If it is determined under generally accepted accounting principles (GAAP) that SCI's payments to PCC are less than 95% of the amount that should have been paid, SCI will pay the expenses of the examination. If it is determined under GAAP that SCI's payments to PCC are equal to or greater than 95% of the amount that should have been paid, PCC will reimburse SCI for all costs and expenses incurred by SCI in participating in the examination.

4. LICENSE GRANT

4.1 As further partial consideration for the sale and assignment of the PCC PROPERTY to SCI, SCI hereby grants PCC a perpetual, irrevocable, personal, non-exclusive, non-transferable, fully-paid up, worldwide license under the PCC PROPERTY to:

A. Sell or lease any product, part, component or device;

B. Make, have made, and import any product, part, component or device for sales and;

C. Sublicense the United States Government to make, have made, import and use any product, part, component or device for government purposes.

4.2 The license grant under the PCC PROPERTY as provided for in paragraph 4.1 above shall be deemed to not include any right to grant sublicenses, except as specifically stated in subparagraph 4.1(C) above.

5. WARRANTIES AND DISCLAIMERS

5.1 Subject to the provisions of paragraphs 2.2 above and 5.2 below, PCC represents and warrants that it is the owner of all right, title and interest in and to the PCC PROPERTY, and PCC has the right to sell and assign to SCI such right, title and interest therein.

5.2 The PCC PROPERTY is being sold "AS IS" to SCI, and PCC makes no warranty or representation, express or implied, with respect to the validity, enforceability or infringement of any part or all of the PCC PROPERTY, except as otherwise provided in paragraph 5.4 below.

5.3 PCC further represents and warrants that:

A. There are no licenses, releases or other rights granted to third parties under part or all of the PCC PROPERTY, except for those specified in Exhibit A attached hereto (EXISTING LICENSES);

B. The EXISTING LICENSES are non-transferable and without the right to grant sub-licenses; and

C. PCC will timely provide SCI with copies of all agreements, memoranda, understandings, and other documents which contain, memorialize, evidence, mention or otherwise relate to the EXISTING LICENSES, such that SCI can fully evaluate the EXISTING LICENSES during the due diligence period provided for in paragraph 7.1 below.

5.4 PCC represents and warrants that it has no knowledge of any information, facts or circumstances that render any patent or patent application included in the PCC PROPERTY invalid or unenforceable, and that the patents and patent applications included in the PCC PROPERTY were not procured from the U.S. Patent and Trademark Office through violation of 37 C.F.R. 1.56.

6. NOTICES

6.1 All notices, requests, demands and other communications under this Agreement or in connection herewith shall be given to the respective parties hereto in writing, shall be served by facsimile transmission confirmed by mail, and shall be deemed to have been given when deposited in the mail with postage prepaid and addressed as follows:

If to PCC:

Mr. Byron Rovegno
10497 Chace Drive
Cupertino, California 95014

Facsimile No.: (408) 735-1171

If to SCI:

Mr. Thomas W. Baumgarten, Jr.
Vice President
St. Clair Intellectual
Property Consultants, Inc.
Suite No. Two
16845 Kercheval Ave.
Grosse Pointe, MI 48230 USA

Facsimile No.: (313) 884-8457

Either party may change the above designated recipients and addresses for such notice by providing the appropriate information in writing to the other party.

7. DUE DILIGENCE

7.1 Upon execution of this Agreement by both parties, SCI will have a thirty (30) day period to perform due diligence with regard to the PCC PROPERTY. During this due diligence period, SCI shall have the unconditional right, without having to provide comment or reason, to terminate this Agreement and all obligations and rights of the parties under this Agreement, without resulting in any claims or liability between the parties hereto.

7.2 At any time prior to the expiration of the thirty (30) day due diligence period specified in paragraph 7.1 above, SCI may waive, by written affirmation, SCI's right to perform due diligence under paragraph 7.1. In the event of such waiver by SCI, said due diligence period will be immediately deemed to have expired.

8. RIGHT OF FIRST REFUSAL

8.1 In the event SCI proposes to enter into a firm agreement with a third party for the sale of the PCC PROPERTY or any portion thereof to the third party, SCI shall give PCC notice of such proposed sale. PCC shall then have thirty (30) days from the date of such notice by SCI to provide SCI with notice that PCC wishes to purchase the PCC PROPERTY on the same terms and conditions as those negotiated by SCI for the sale of the PCC PROPERTY to said third party.

8.2 In the event PCC provides SCI with notice that PCC desires to purchase the PCC PROPERTY or any portion thereof as provided for in paragraph 8.1 above, SCI shall submit to PCC a purchase agreement providing for the sale of the PCC PROPERTY to PCC on the same terms and conditions as the third party sale proposed by SCI. PCC shall then fully execute said purchase agreement and return the same to SCI within fourteen (14) days after receiving said purchase agreement from SCI.

8.3 In the event PCC does not provide SCI with notice of PCC's intent to purchase the PCC PROPERTY as provided for in paragraph 8.1 above, or PCC does not provide SCI with a fully executed purchase agreement as provided for in paragraph 8.2 above, PCC shall be deemed to have waived its rights to purchase the PCC PROPERTY under paragraphs 8.1 and 8.2 above, and SCI may proceed with the proposed sale of the PCC PROPERTY to a third party without any recourse by PCC.

8.4 Notwithstanding anything to the contrary in this Agreement, the filing of any patent application, issuance of any patent, maintenance of any patent or patent application, or abandonment of any patent or patent application included in or related to the PCC PROPERTY shall be solely within the discretion of SCI without notice to PCC.

8.5 Notwithstanding anything to the contrary in this Agreement, the granting to third parties of any licenses, releases or other rights under any part or all of the PCC PROPERTY shall be within the sole discretion of SCI without notice to PCC.

9. MISCELLANEOUS

9.1 Upon expiration of the due diligence period specified in Paragraph 7.1 above, the Effective Date of this Agreement shall be deemed to be the date this Agreement was executed by both parties hereto.

9.2 This Agreement sets forth the entire agreement and understanding by and between the parties hereto and merges all prior discussions and agreements previously entered into regarding the subject matter hereof, and neither party shall be bound by any addition to or modification of this Agreement with respect to the subject matter of this Agreement or waiver of any provision of this Agreement, other than as is expressly provided in writing and signed by a duly authorized representative of the party to be bound thereby.

9.3 The parties agree that execution of this Agreement by facsimile shall have the same force and effect as execution of an original Agreement.

9.4 Headings and captions are for convenience only and are not to be used in the interpretation of this Agreement.

9.5 If any provision of this Agreement is held by a court of competent jurisdiction to be illegal, invalid or unenforceable, that provision shall be limited or eliminated to the minimum extent necessary so that this Agreement shall otherwise remain in full force and effect and enforceable.

9.6 SCI shall not assign or transfer this Agreement or any of its rights, duties or obligations hereunder without the prior written consent of PCC.

9.7 PCC shall not assign or transfer this Agreement or any of its rights, licenses, duties or obligations hereunder without the prior written consent of SCI.

10. TERMINATION

10.1 This Agreement may be terminated by PCC for cause immediately by written notice in the event:

A. SCI ceases to do business, or otherwise terminates its business operations; or

B. SCI materially breaches this Agreement and fails to cure such breach within 30 days (10 days in the case of a failure to pay) of written notice by PCC describing the breach; or

C. SCI becomes insolvent or seeks protection under any bankruptcy, receivership, trust deed, creditors arrangement, composition or comparable proceeding, or if any such proceeding is instituted against SCI (and not dismissed within 90 days).

10.2 In the event of any termination under Paragraph 10.1 above, all of SCI's rights, title and interest in and to the PCC PROPERTY shall immediately revert to PCC. SCI agrees to perform all acts including, without limitation, execution of documents upon PCC's request, necessary to evidence, perfect, and obtain such reversion.

10.3 In the event SCI sells the PCC PROPERTY, or any portion thereof, to a third party in accordance with Paragraphs 8.1 through 8.5 of this Agreement, all rights and interests of PCC under Paragraphs 10.1 and 10.2 above shall immediately terminate.

10.4 This Agreement may be terminated by SCI for cause immediately by written notice in the event:

A. PCC ceases to do business, or otherwise terminates its business operations; or

B. PCC materially breaches this Agreement and fails to cure such breach within 30 days of written notice by PCC describing the breach;

C. PCC becomes insolvent or seeks protection under bankruptcy, receivership, trust deed, creditors arrangement, composition or comparable proceeding, or if any such proceeding is instituted against PCC (and not dismissed within 90 days).

IN WITNESS WHEREOF, the duly authorized representatives of the parties hereto have caused this Agreement to be executed.

Personal Computer Camera, Inc.	St. Clair Intellectual Property Consultants, Inc.
By: Jerry A. Spiesl	By: Edmund M. Chung President
Date: Nov 1, 1995	Date: November 21, 1995

EXHIBIT A

EXISTING LICENSES

Agreement dated November 24, 1993 by and between Personal Computer Cameras, Inc. and Aura Associates.

Agreement dated June 13, 1994 by and between Personal Computer Cameras, Inc. and Aura Associates.

Agreement dated September 19, 1994 by and between NEC Corporation, a Japanese corporation having its principal place of business at 7-1, Shiba 5-Chome, Minato-ku, Tokyo 109-01, Japan (NEC) and Aura Associates Inc., a California corporation having its principal place of business at 2605 South Winchester Boulevard, Campbell, CA 95008, and Personal Computer Cameras, Inc., a Virginia corporation having its principal place of business at 2605 South Winchester Boulevard, Campbell, CA 95008.

CONFIDENTIAL stclair13260

EXHIBIT I

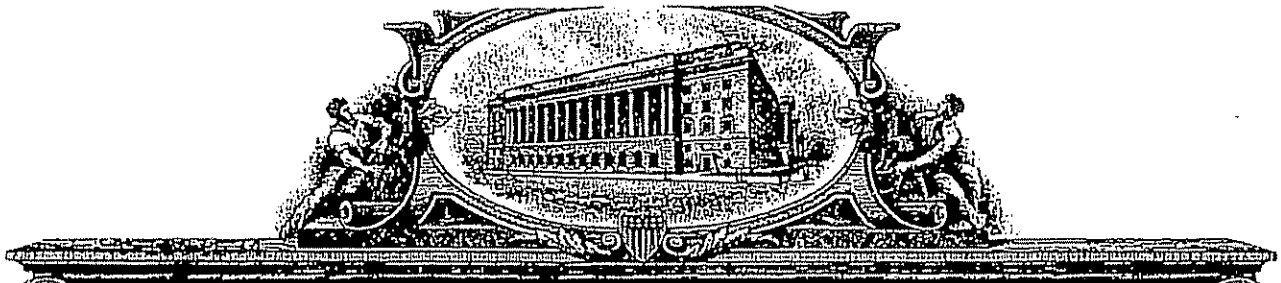

THE UNITED STATES OF AMERICA

TO ALL TO WHOM THESE PRESENTS SHALL COME:

UNITED STATES DEPARTMENT OF COMMERCE
United States Patent and Trademark Office

September 29, 2004

THIS IS TO CERTIFY THAT ANNEXED IS A TRUE COPY FROM THE RECORDS OF THIS OFFICE OF A DOCUMENT RECORDED ON JANUARY 16, 1996.

By Authority of the
COMMISSIONER OF PATENTS AND TRADEMARKS



Gloria A. Murray

GLORIA A MURRAY
Certifying Officer

FORM PTO-1595 (Rev. 6-93)
OMB No. 0651-0011 (exp. 4/94)

REC 05-13-1996 SHEET

U.S. DEPARTMENT OF COMMERCE
Patent and Trademark Office

100171382

Tab settings ▽ ▽ ▽ ▽ ▽ ▽ ▽

To the Honorable Commissioner of Pa

ched original documents or copy thereof

1. Name of conveying party(ies):

PERSONAL COMPUTER CAMERAS, INC

Additional name(s) of conveying party(ies) attached? ☐ Yes ☒ No

2. Name and address of receiving party(ies)

Name: ST. CLAIR INTELLECTUAL PROPERTY CONSULTANTS, INC.

Internal Address:

16845 Kercheval Ave., Suite 2

Grosse Pointe, Michigan 48230

Street Address: 16845 Kercheval Ave., Suite 2

City: Grosse Pointe State: MI ZIP: 48230

Additional name(s) & address(es) attached? ☐ Yes ☒ No

3. Nature of conveyance:

☒ Assignment ☐ Merger

☐ Security Agreement ☐ Change of Name

☐ Other

Execution Date: January 9, 1996

MAO 1-16-96

4 Application number(s) or patent number(s):

If this document is being filed together with a new application, the execution date of the application is:

A Patent Application No (s)
08/098,787
08/445,010
09/445,009

B Patent No (s) 5,138,459

Additional numbers attached? ☐ Yes ☒ No

5 Name and address of party to whom correspondence concerning document should be mailed:

Name: Gordon K. Harris, Jr., Esq.

Internal Address:

Street Address: HARNESS, DICKEY & PIERCE

P.O. Box 828

City: Bloomfield Hills State: MI ZIP: 48303

6 Total number of applications and patents involved: 4

7 Total fee (37 CFR 3.41)..... $ 160.00

x Previously submitted (per enclosed)

☐ Enclosed

☒ Authorized to be charged to deposit account for any deficiencies

8 Deposit account number:

08-0750

(Attach duplicate copy of this page if paying by deposit account)

DO NOT USE THIS SPACE

chg $30 spec Fee

9. Statement and signature.

To the best of my knowledge and belief, the foregoing information is true and correct and any attached copy is a true copy of the original document

Gordon K. Harris, Jr.
Name of Person Signing

Reg. No. 28,819

Signature

May 10, 1996
Date

Total number of pages including cover sheet, attachments, and document:

Mail documents to be recorded with required cover sheet information to:
Commissioner of Patents & Trademarks, Box Assignments
Washington D.C. 20231

PATENT
REEL: 7803 FRAME: 0944

AHD 1-16-96

ST. CLAIR INTELLECTUAL PROPERTY CONSULTANTS, INC.

SUITE NUMBER TWO
16345 KERCHEVAL AVENUE
GROSSE POINTE, MICHIGAN 48230 U.S.A.

160.00-581

02-09-1996

100131849

Commissioner Of Patents And Trademarks
Attn: Assignment Branch
2800 Crystal Drive
10th Floor
Arlington, VA 22202

VIA FEDEX

Re: Recording Of Patent Assignment

Dear Sir:

We have enclosed a fully executed and notarized patent assignment for the assignment of one issued U.S. patent and three U.S. patent applications from Personal Computer Cameras, Inc. to St. Clair Intellectual Property Consultants, Inc.. Please record the enclosed assignment in the official records of the U.S. Patent and Trademark Office.

Our bank check number 1500 made out to the Commissioner of Patents and Trademarks in the amount of $160.00 has been enclosed as payment of the fee due for recording the enclosed assignment.

Thank you for your kind attention to this matter.

Very truly yours,

Thomas W. Baumgarten, Jr.

RECEIVED
96 JAN 16 AM 10:37
ASSIGNMENT BRANCH

270 HH 02/08/96 5138459 2 581 160.00 CK

160.00CK

010496

U.S. PATENT ASSIGNMENT

WHEREAS, Personal Computer Cameras, Inc. a corporation of the Commonwealth of Virginia, having offices at 10497 Chace Drive, Cupertino, California 95014 ("PCC") is the owner of all right, title and interest in and to the following United States patents and patent applications, hereinafter collectively referred to as the "PATENTS":

Patent / Application	Filing Date	Issue Date	Inventors
5,138,459	11/20/90	08/11/92	Roberts et al.
08/098,787	07/29/93	N/A	Roberts et al.
08/445,010	05/19/95	N/A	Roberts et al.
08/445,009	05/19/95	N/A	Roberts et al.

WHEREAS, St. Clair Intellectual Property Consultants, Inc., a Michigan Corporation having offices at 16845 Kercheval Ave., Suite 2, Grosse Pointe, Michigan 48230 ("SCI") is desirous of acquiring all right, title and interest in, and to the PATENTS.

NOW, THEREFORE, in consideration of One Dollar ($1.00) and other good and valuable consideration, the receipt and adequacy of which is hereby acknowledged, PCC hereby sells, assigns, transfers and conveys unto SCI, its successors and assigns all right, title and interest in and to the following:

A. The PATENTS;

B. All divisions, continuations, continuations-in-part and reissues of the PATENTS; and

C. All claims, demands, or causes of action that PCC has or might have by reason of any infringement of the PATENTS prior to the effective date of this assignment, including the right

PATENT
RECD : 7803 FRAME: 0946

to collect damages for such past infringement in the name of SCI.

Personal Computer Cameras, Inc.

By: Jerry A. Speasl
Jerry A. Speasl
President

Date: 1-9-96

State of California)
County of Alameda)

Signed before me this 9th of January, 1996.

Nooshin Mahini
Notary Public

OFFICIAL SEAL - 986072
NOOSHIN MAHINI
NOTARY PUBLIC - CALIF.
COUNTY OF ALAMEDA
My Comm. Exp. June 4, 1997

RECORDED: 01/16/1996

PATENT
REEL: 7803 FRAME: 0947