EXHIBIT 11

-020

T1X1.4/86- 020

CONTRIBUTION TO T1 STANDARDS PROJECT

****

TITLE: "RATES AND FORMATS FOR FIBER OPTIC INTERFACES"

****

SOURCE: BELL COMMUNICATIONS RESEARCH, INC.

Rodney Boehm
331 Newman Springs Rd
Red Bank, NJ 07701
(201) 758-5404

Yau-Chau Ching
331 Newman Springs Rd
Red Bank, NJ 07701
(201) 758-5454

Sabit Say
331 Newman Springs Rd
Red Bank, NJ 07701
(201) 758-5477

****

DATE: FEBRUARY 14, 1986

****

DISTRIBUTION TO: T1X1.2/.4

NOTICE

This document has been prepared to assist Standards Committee T1-Telecom unications. It is offered to the Committee as a basis for discussion and is not a binding proposal on Bell Communications Research or the Bell Operating Companies. The requirements presented in this document are subject to change in form and numerical value after more study. Bell Communications Research specifically reserves the right to add to, amend or withdraw the statements contained herein.

1. INTRODUCTION

During the past year and a half, T1X1 has been discussing the development of a standard optical interface. This was motivated by the need to achieve "mid span" meets. Also during this time related conversations have occurred in T1D1 and CCITT concerning broadband ISDN interfaces. The documentation for each of these activities is normally spread over many documents and it is sometimes difficult to keep the important issues clear and in proper perspective.

One may ask why these two seemly unrelated activities are related. If we examine a traditional network of a few years ago (Figure 1), we see virtually all of the processing or switching being done at central offices connected by inter-office trunking. In this arrangement the inter-office facilities needed high capacity links to handle the traffic between the central offices. The loop was a copper pair that originated at the central office and terminated at the subscriber.

Recently electronics has been introduced in the loop to provide a means of gathering many subscriber loops into a high capacity link to the central office. This is illustrated in Figure 2. If one examines the link from the remote electronics and the central office, it looks very much like an inter-office facility in terms of capacity, availability, transmission techniques, and quality requirements. The loop to the subscriber is much shorter but is still twisted pair copper.

Figure 3 illustrates the network that has been conceived by many people to be the network of the future. Both CCITT and T1D1 have undertaken work to define broadband ISDN which requires a high capacity interface (T1D1/85-087) to the customer in order to provide video services. If one examines the link in this network from the remote electronics to the subscriber, it takes many of the characteristics of a present inter-office link, particularly concerning capacity and transport media (most discussions center on a single-mode fiber interface to the subscriber).

It is because the links between central offices, remote electronics, and subscribers are becoming so similar effort should be made to provide a standard interface specification which will satisfy each application's needs. This was recognized in the recent contribution (T1X1.4/86-006). Channelization of the interface is still an open issue, but it is clear that existing standard signals (e.g. DS1, DS1C, DS2, DS3, CEPT-1, and etc) must be efficiently transported to ease the introduction of a standard signal. Additionally, it is clear that services above DS3 rate (particularly video) are desired.

This contribution focuses on the related documents from T1X1 and T1D1 and collects all of the details of a signal rate and format, which has been worked on in T1X1.2/.4 since February, that will satisfy the transport requirements of both activities. The basic concept of this signal is to provide a path for services by defining transport overhead but leaving the information payload flexible which can be channelized at a later date by T1D1 (broadband ISDN), T1C1 (customer interfaces), or T1X1 (loading of DS1,DS3, and etc). Capacity is also allocated to be used for maintenance activities which will be defined by T1M1.

2. RELATED ACTIVITIES AND DOCUMENTS

A joint sub-working group, T1X1.2/.4, was formed to develop rate and format for an optical interface in response to a request from the T1X1.2 sub-working group on optical interfaces. During the initial meeting of the joint group a project proposal (T1X1.4/85-017) was formed to outline and guide the group's activity. Three main points which are present in the proposal are:

1. The group is to concentrate on the establishment of a set of rates and formats for fiber optic interfaces at and/or above 44.736 Mb/s.
2. This activity is to provide a non-proprietary interface which will not constrain proprietary network activities or applications.
3. Consideration will be given to achieve compatibility with the existing digital communications systems to insure an orderly growth toward higher bit rates.

An initial contribution (T1X1.4/85-006) proposed a signal and a multiplexing scheme called a Synchronous Optical Network (SONET). An ad-hoc group was formed to examine the overhead structure and provide a contribution concerning the necessary overhead channels and capacity associated with each. Their report (T1X1.4/85-053R1) is still under revision but contains much useful information concerning the necessary overhead functions. Additional contributions were presented to refine some of the specific functions of each channel (T1X1.4/85-054), justify the need for a modular approach in multiplexing (T1X1.4/86-008), and to suggest a grouping of overhead functions into four categories to help define the need to access each group in a signal (T1X1.4/86-012).

In response to initial comments and contributions, the original rate and format contribution (T1X1.4/85-006) has been revised and reissued as T1X1.4/86-009 and now defines a basic signal rate of 49.920 Mb/s. It is anticipated that this document will be the basis of the standard with further revisions (particularly with the recent BNR contribution describing a pointer scheme for multiplexing).

The existing network and standard signals have driven the rate and format discussions in T1X1. In T1D1 it has been suggested that video services be the most important selection criteria for a wideband channel rate (T1D1/85- 120). If we examine video services, we find that video quality considerations set the lower bound of channel bit rate since video coder/decoder complexity increases as bit rate decreases for a given quality. A range of bit rates can provide various levels of video service quality. For example, NTSC-quality video can be supported with the channel in the range between 40 and 115 Mb/s, extended quality video between 90 and 200 Mb/s, and high definition video between 120 and 400 Mb/s. Video channels should be capable of providing standard and extended qualities; as such, 90 Mb/s is considered a lower bound on the channel. Mechanisms for providing high definition video are for further study.

Switching technology sets the upper bound of the video channel since switching costs increase with switching speed. An assumption is that CMOS technology will be fundamental to the future implementation of broadband switching and transmission systems. A high-speed switching device operating at 150 Mb/s constructed using a commercially available 3 micron CMOS design process has been demonstrated.[1] Emerging design rules at or below the 2 micron level may push the capabilities of CMOS to around 200 Mb/s. Hence, 200 Mb/s is considered as an upper bound on the channel bit rate.

A broadband interface structure that supports a multiplicity of channels has been proposed.[2] Recent high-speed optical transmission experiments have shown that it is possible to drive single-mode fiber with surface- emitting, edge-emitting, and super-radiant LEDs operating at 560 Mb s over distances of 4.5 km, 15 km, and 25 km, respectively.[3] Hence, a channel bit rate of approximately 150 Mb/s would permit the use of LEDs and single-mode fiber in the subscriber loop to supply up to 4 channels to subscribers. As detailed in later section (3.3), the 150 Mb/s broadband ISDN channel can be defined as a super-rate channel with an integer number relationship between the basic channel rate and the broadband ISDN channel rate. This seems to be a cost-effective implementation for broadband interfaces to ISDN in the near-term and leaves open the future application of laser diodes to subscriber loop transmission systems.

Another consideration in the choice of the channel bit rate is the compatibility with existing or proposed digital hierarchies. The potential for exact compatibility with a proposed network based on bit- interleave multiplexing can only be realized if the channel bit rate is chosen such that existing standard signals can be loaded in the information payload efficiently.

At first appearance, optimization of the transport of existing signals would seem to preclude efficient transport of the suggested broadband video channels. The following sections detail a signal and a multiplexing technique that has been developed by members of T1X1.2/.4 which will satisfy the transport requirements of both.

3. RATES

The basic modular electrical signal shall be termed the "Synchronous Transport Signal level 1", or STS-1. In this proposal, a rate of 49.92 Mb/s is recommended to efficiently carry DS3 and lower rate signals. Broadband services can be provided by an associated "Synchronous Transport Signal level N, or STS-N, where N indicates a rate of N×49.92 Mb/s. Depending on the specific application, N can be any integer between 1 and 256. Table 1 lists some sample services and related synchronous transport signals. STS-N is an electrical signal which can be further multiplexed into a higher rate signal, STS-M, where M > N. An STS-M signal, for an arbitrary M, is transmitted via its optical equivalent, the Optical Carrier level M, or OC-M. Specifications of physical layer characteristics of OC-M is being considered by T1X1.2 fiber optic subworking group. It is recognized that, depending on technology and traffic load, OC-M could be at a rate much higher than that of STS-1 or that of a single super-rate signal. Similarly, when traffic demand is low, an OC-1 could be transmitted as an economic optical carrier signal. The choice of N will be an issue to be negotiated between a manufacturer and his customer. At some future date the range of N might be modified and restricted to facilitate easy interconnectability.

4. MODULARITY

4.1 Uncertain Services, Bandwidth Demands

Many broadband applications are not yet specified or known. Bandwidth demands and bit rates of services change as the technology advances (e.g. encoding algorithms for compression of video signals, advanced digital signal processing implemented in VLSI). Today, broadband services demand a range of bandwidths:

1. High definition TV: 120-400Mb/s
2. Compressed HDTV, broadcast quality video: 90-200Mb/s
3. Conventional video with DPCM coding: 30-115Mb/s
4. High speed data transfer: 6-20Mb/s
5. Video conferencing: 1.5-6Mb/s

Access and transport through the exchange network of these services requires that the fiber interface not only be flexible but also compatible with the future network digital signal hierarchy. A universal network with an ability to evolve is the most important feature of the fiber interface. Economical service can only be achieved in an integrated network design that can handle and transport all these services. A flexible network structure is needed to satisfy the requirements of today and tomorrow.

For broadband services previous contributions have indicated that packet-mode techniques are a way to achieve flexibility at rates lower than the broadband channel rate (T1D1.1/85-113, T1D1.1/85-149). The modular approach described here is necessary to construct channels at rates higher than the STS-1 rate for basic transport of broadband services and to facilitate the introduction of other undefined services.

4.2 Synchronous Multiplexing

The modular approach, which will reduce hardware, maintenance and operating costs, requires that the Nth level signal OC-N, a direct optical translation (no line coding) of the Nth level electrical signal STS-N, is obtained by synchronously multiplexing the modular signal OC-1. Thus, the complexity of the expensive high speed circuits will be limited to simple bit interleaving of STS-1's

allowing complex operations be performed at the lower STS-1 rate in a modular fashion so that high volume VLSI circuits can be employed for cost and power savings. This approach also enables flexible system sizing for expansion by reducing inventories.

4.2.1 Rate and Format of the Basic Module There is an integral multiple relationship between the rate of the basic module OC-1 and multiplexed line signal OC-N.

$$\text{OC-N} = N \times \text{OC-1}$$

Therefore, the definition of the first level signal defines the entire hierarchy. The bit rate chosen for the basic building block, OC-1, is 49.920 Mb/s. Since this rate accommodates current network rates (such as DS3) without format conversion, initial deployment of associated services will be eased. Also, this rate represents a convenient bundle size for network grooming. OC-1 has integral operations, maintenance and administration capabilities and separate overhead and information payload in a flexible TDM frame so that different types of signals can be accommodated. This will ensure reduced network operating costs in a multi-vendor environment.

4.3 Layered Overhead Structure

The modular signal STS-contains an integral overhead structure which allows it to be transported through the network as an independent entity. As an extension of the idea of separating the overhead and payload information for flexibility, a layered overhead structure is proposed. Basically, functions related to STS-N framing, line error monitoring, channel identification and span-to-span communications, maintenance and control channels will be grouped under *span overhead* and payload related functions such as end-to-end error-checking, communications, maintenance and control, payload identification will be grouped under *network overhead (see section 6.1)*.

4.4 Super-Rate Services

Super rate services (that require multiples of the OC-1 rate) such as broadband ISDN can be accommodated by transporting the OC-N bundle together. A service that requires such bandwidth can be efficiently transported such that

$$\text{OC-N'} = N \times \text{OC-1}$$

where OC-N' is a bit rate of the channel required by the service. An indication that the OC-N' bundle should be kept together can be contained in the OC-1 overhead. This allows the bundle to be multiplexed, switched and transported through the network as a single entity. For super-rate services, not all of the overhead bandwidth need be utilized for overhead functions. In this manner, there will not be any loss in efficiency in defining the basic module at a lower rate.

5. FORMAT

5.1 STS-1 Frame Structure

Each STS-1 signal is organized into 125 μs frames. Each frame consists of 6240 bits, grouped into 780 bytes. These bytes are further grouped into 30 26-byte blocks. One block is used for overhead functions to be described in the next section, while the remaining bytes are mainly for information payload. For voice applications the information payload could be organized as 754 time slots, each

at 64 Kb/s. For other applications such as data and video services, no format need be defined for the information payload. Instead, it may be considered as a 48.256 Mb/s pipe. To interface the existing digital hierarchical network, STS-1 has the capability of accepting DS1, DS1C, DS2 and DS3 signals. These mappings are currently under consideration. Depending on the specific application, some other organization for the information payload is also possible. The overhead information regarding the actual organization of a particular STS-1 may be transmitted to the far end via overhead channels embedded in the STS-1, to be described in the next section.

5.2 STS-N Frame Structure

An STS-N frame can be envisioned as formed by bit-interleaved multiplexing N STS-1 signals into one high speed bitstream. The actual implementation should be the responsibility of the manufacturers. Often an STS-N signal is formed by bit- interleaved multiplexing N STS-1s, possibly with some intermediate multiplexing stages. In other applications, such as a super-rate service, STS-N can be formed by generating an overhead structure similar to that of N bit-interleave multiplexed STS-1 signals, and mapping the super-rate signal directly into the information payload of STS-N. To provide super-rate services, however, certain phase relationships between the overhead channels of neighboring STS-1s may be imposed. In addition, some overhead channels of individual STS-1s in an STS-N may be redundant and could be ignored or redefined for other purposes.

5.3 STS-1 Overhead Assignments

The frame format for an STS-1 is shown in Figure 4 where the overhead channels are also assigned. The overhead functions considered in this figure are:

Framing channels - A1, A2
Error monitoring - B1, B2
Channel identification - C1, C2
User facility maintenance and control - D1, D2
Order-wire - E1, E2
User proprietary channels - F1, F2, F3
Manufacturer's proprietary channels - G1, G2
Frame Alignment control - H1, H2, H3
Growth channels - J1 to J7

and they are listed, with their assigned locations, in Table 2.

6. OVERHEAD FUNCTIONS

6.1 Classifications

The above-mentioned overhead functions will be defined and classified into various categ ..es. One possible breakdown is:

1. Those functions required on every facility.
2. Those functions that are intimately related in a real-time sense to the bit patterns being transported.
3. Those functions that require communication between the terminal control computers.
4. Those functions that are application dependent.

Another breakdown is:

1. Sectional
2. Multiplexer span
3. Optical network
4. Service path

6.2 Definitions

Framing - Two framing channels (A1, A2) are recommended for each STS-1. The reframe is accomplished by examining the 8-bit blocks until one of the two subframing patterns is identified. Then the other pattern is tracked. This reframing technique requires minimal circuitry and has a reframe time of about 1 msec.

Channel error monitoring - This function consists of two 8-bit channels (B1, B2). A cyclic redundancy check code-8 (CRC-8) for section and span error-check and a CRC-8 for network error-check.

Span channel identification (C1) - This is a unique number assigned just prior to multiplexing that stays with that STS-1 until demultiplexing. In a multiple stage multiplexer C1 is modified at each stage.

Network signal label channel (C2) - This channel defines how the information payload is organized in the frame and how it is constructed. It will be used to identify asynchronous DS3, SYNTRAN, digital video, etc. payloads and to include the need to group multiple payloads, if such payload exists.

Span maintenance and control (D1, D2) - These are for automatic switching, fault locating, terminal and switching office surveillance and other span-to-span measurements. Specific channel definition and usage of these two channels will be determined by T1M1.

Network maintenance and control (D3) - This channel is assigned for the monitoring, control and analysis of the multi-span networks. It is made available for packet switching and centralized maintenance applications.

Order-wire - Two order wire channels are allocated: local (E1) and express (E2). These are reserved for communication between central offices and, where required, regenerators, hubs and remote terminal locations. This reservation is in line with current industry practices.

Span user proprietary channel (F1) - This is allocated to the EC/IEC user for his input of span information such as data communication for use in maintenance activities and remoting of alarms external to the span equipment.

Network user proprietary channels (F2, F3) - These are for EC/IEC use as end-to-end VF communication channels for themselves and/or their end users.

Manufacturers proprietary channels (G1, G2) - Two span oriented channels are recommended to be reserved for manufacturer's use for unique enhancements he might introduce.

Frame alignment control - Three channels are recommended to allow for asynchronous impairments in an otherwise synchronous network. The first two (H1, H2) are redundant channels that are used for indicating the action to be performed, i.e., clocks in instantaneous synchronization. The third channel (H3) is the bit to be acted upon. (Note: This channel will contain 7, 8 or 9 bits - depending on H1/H2. Seven bits of this channel are available for other assignments.) A newly recommended pointer scheme uses the same frame alignment channels to allow an alignment of all framing patterns of the tributaries. The information payload of the tributaries need not be phase-aligned. Instead, their locations are indicated by the framing alignment channels. Asynchronous impairment of the tributary is automatically accommodated by H3 as well.

Growth channels - Seven channels (J1 through J7) are allocated to future growth needs for the industry. Additional growth channels may become available as some of the above requirements are

refined. The final format was designed with this latter factor in mind.

7. MULTIPLEX PROCEDURE

7.1 Bit Interleaved Multiplexing

Nth level optical carrier OC-N will be a direct optical translation of the Nth level electrical signal STS-N. STS-N signal will be formed by bit-interleaving the tributary STS-1 bit streams without additional overhead. Therefore, the line rate will be N×49.920 Mb/s. To eliminate high speed processing, no line decoding will be used. Framing can be achieved by bit de-interleaving the STS-N signal and monitoring framing bytes in any of the serial bit streams from the de-interleaver. Once in frame, the number for that channel is obtained by observing the span channel ID byte in the span overhead and ordering of the channels can be corrected. This method allows an STS-1 rate framer.

7.2 Frames and Pointers

The transmission frame of the STS-1 structure (30×26 bytes) and the source structure (29×26 byte payload) will be decoupled to facilitate super rate services, to avoid difficulties in framing due to a defective source frame and to eliminate frame buffers at cross-connects. According to this scheme, the *source frame* can float inside the payload structure. However, to avoid two stages of framing, the information concerning the location of source frame is conveyed by a pointer in the transmission frame. A 10-bit pointer word which carries the byte number of the start of the source frame is required. Two bytes in the span overhead can be allocated for that purpose (H1, H2).

All span-related functions, framing, span ID, pointer, error monitoring and span operating and control are carried in the span overhead which is interlocked for all STS-1s. This allows super-rate services to perform the necessary operations for multiplexing/demultiplexing without breaking down to component STS-1s. All other functions related to the network are linked to the source frame and depend on the type of payload.

The pointer concept can be extended to the source frame for single step framing down to components of the payload.

7.3 Scrambling

Scrambling is required to achieve sufficient density of state transitions on the line for timing recovery. A self-synchronous scrambler with a monitoring logic which prevents long strings of ones or zeros can be used. Scrambling operation can be performed either before or after bit-interleaving. In either case, the operation has to be performed at any interface where access to overhead or payload information is required, since all the bits, including framing, will be subject to scrambling. In this way, scrambling will be independent from and transparent to the frame and format of the STS-1 signal.

The length and type of the shift register generator should be determined after more study.

8. Conclusion

The detail of a rate and format with a multiplexing technique which has been developed in T1X1.2/.4 has been presented. While further refinement must be made and details of several sections must be filled out, this document will serve as the basis for the standard. It has been shown

that by taking into consideration many views and contributions from a variety of organizations, principally T1X1 and T1D1, a standard optical interface can be defined which will satisfy the transport needs of the present network, the broadband ISDN network, and still provide flexibility for transport of future as yet undefined services by placing very few constraints on the information payload structure.

9. RECOMMENDATION

This document has gathered together in one place the related contributions and discussions concerning the optical interface specifications. It is recommended that this information be taken and turned into a draft standard document to be reviewed in the May meeting.

REFERENCES

1. J. Berthold, et al., "A High-Speed 16 x 16 CMOS Crosspoint Switch," Electronics Letters, Vol.21, No.20, September 26, 1985, pp. 923-932.

2. T1D1/85-122, "Interface Structures for ISDNs Providing Broadband Services."

3. J. L. Gimlet, et al., "Transmission Experiments at 560 Mb/s and 140 Mb/s Using Fiber and 1300 nm LEDs." Proceedings of the 11th European Conference on Optical Communication, Venice, Italy, October 1985.

SIGNALS ACCOMMODATED BY 49.920 MB/S

DS1 DS1C DS2	DS3	DS4E	ED VIDEO	HD VIDEO
STS-1	STS-1	STS-3	STS-3	STS-12

TABLE I

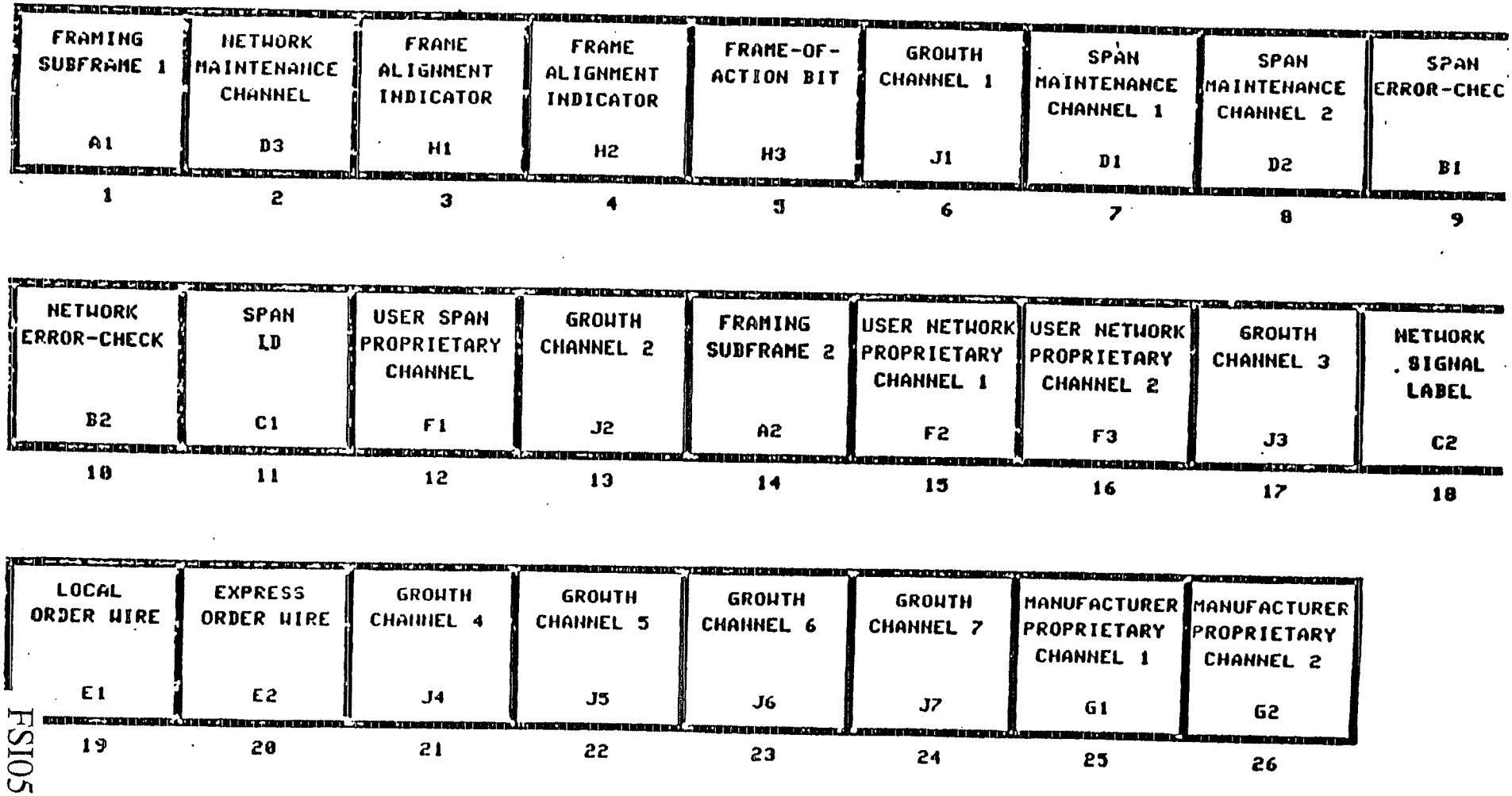


Table 2

FSI058573

Case 1:04-cv-00876-GMS Document 275-5 Filed 11/08/2006 Page 13 of 43

TRADITIONAL NETWORK

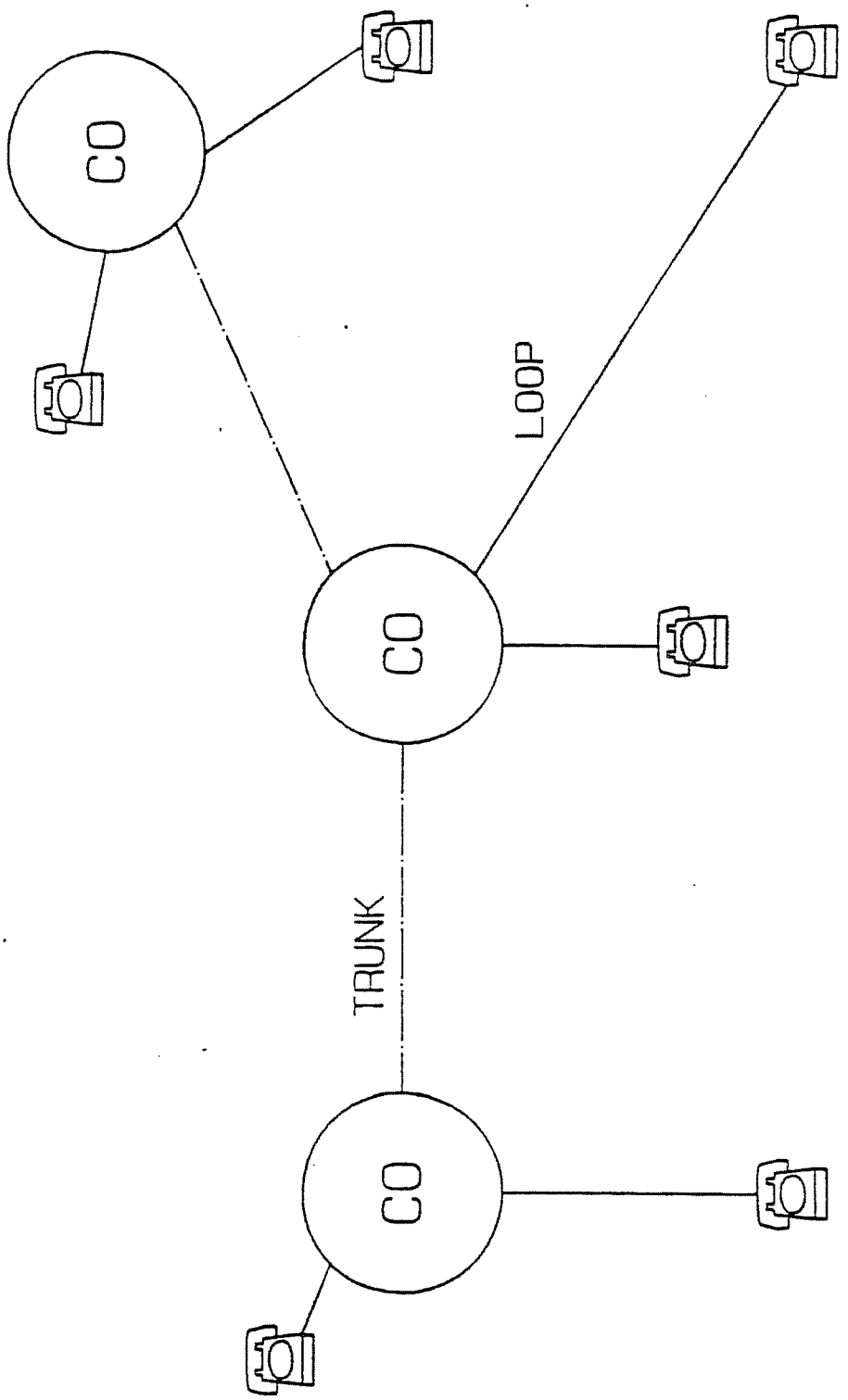


Figure 1

PRESENT NETWORK

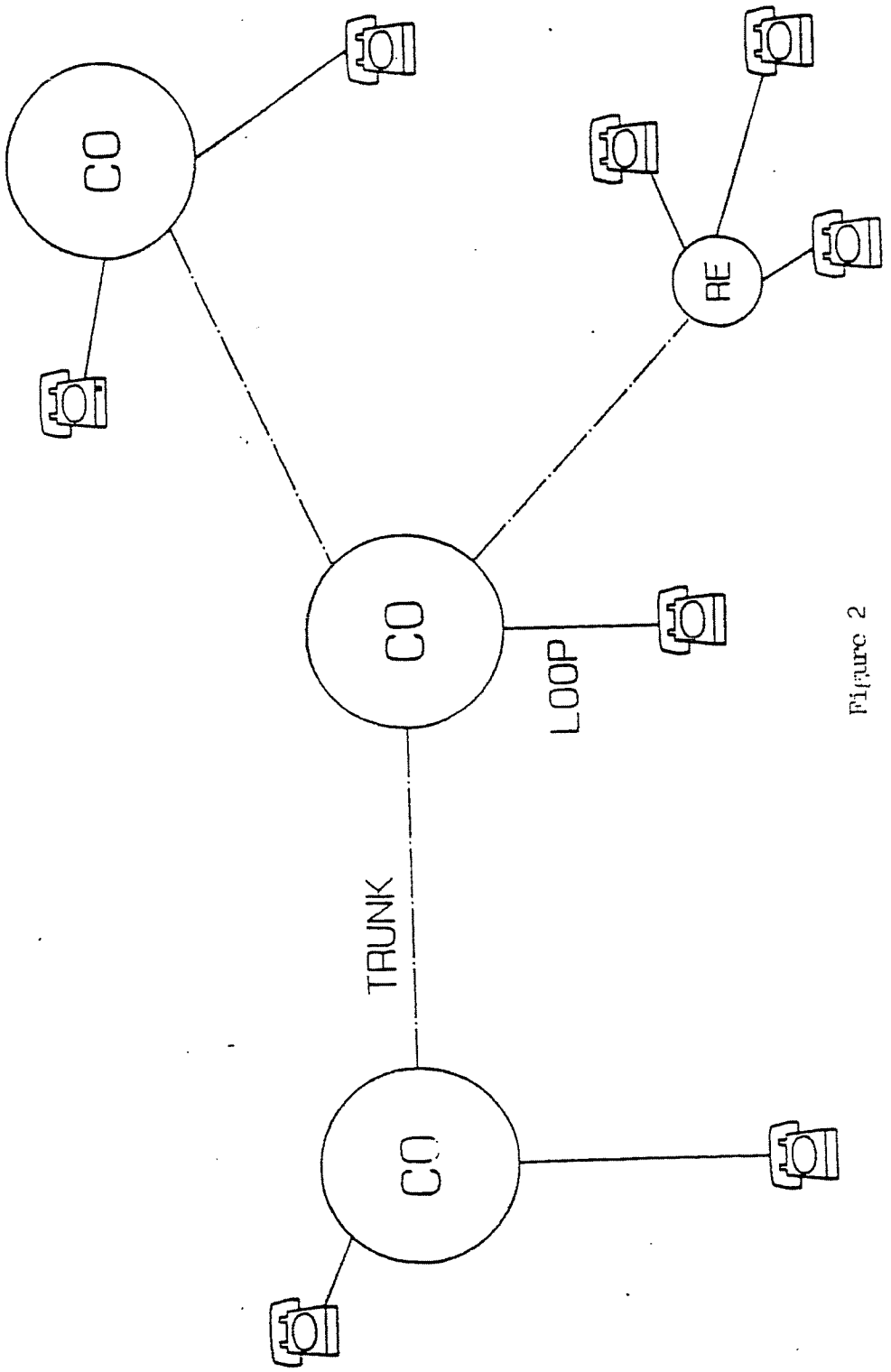


Figure 2

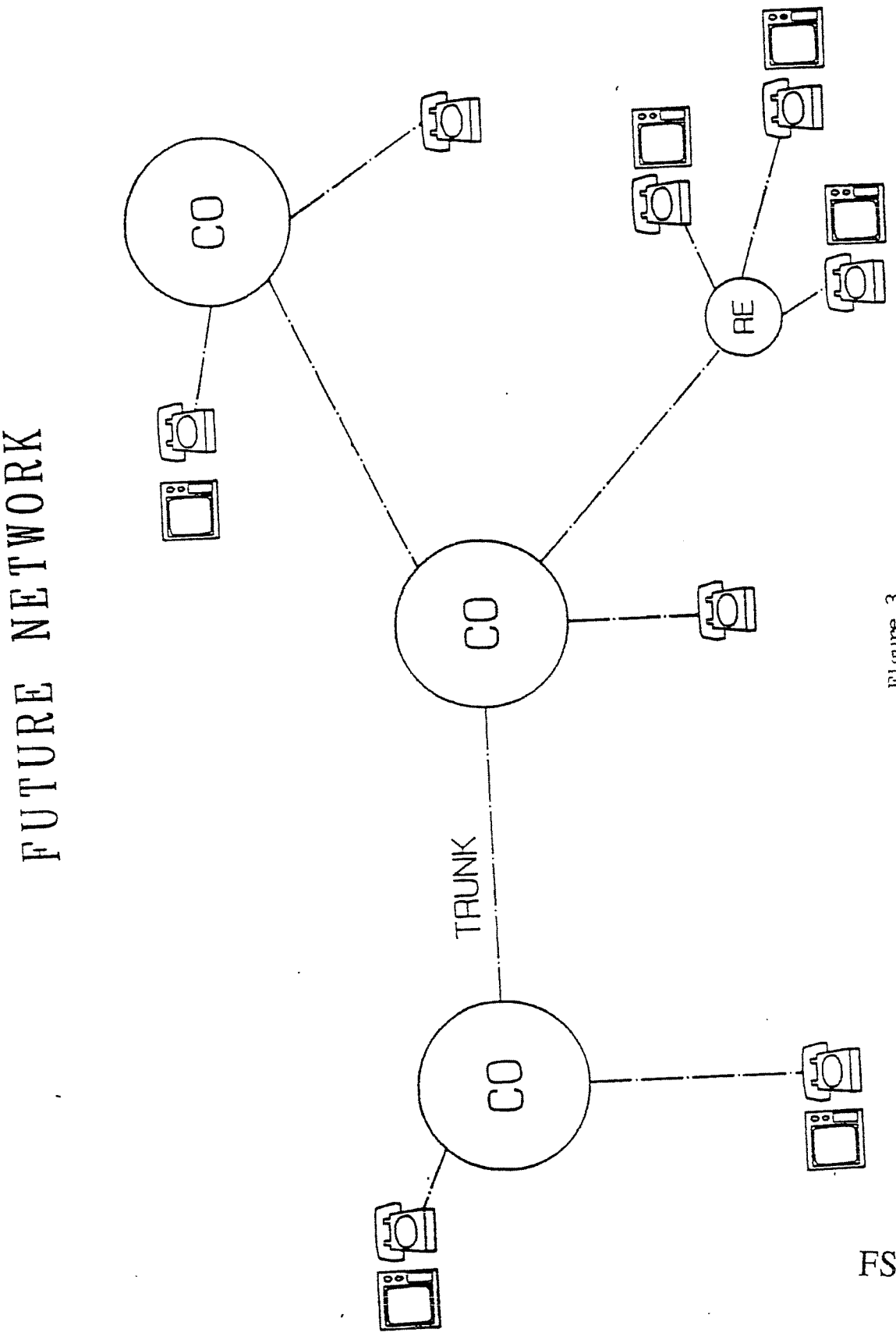


Figure 3

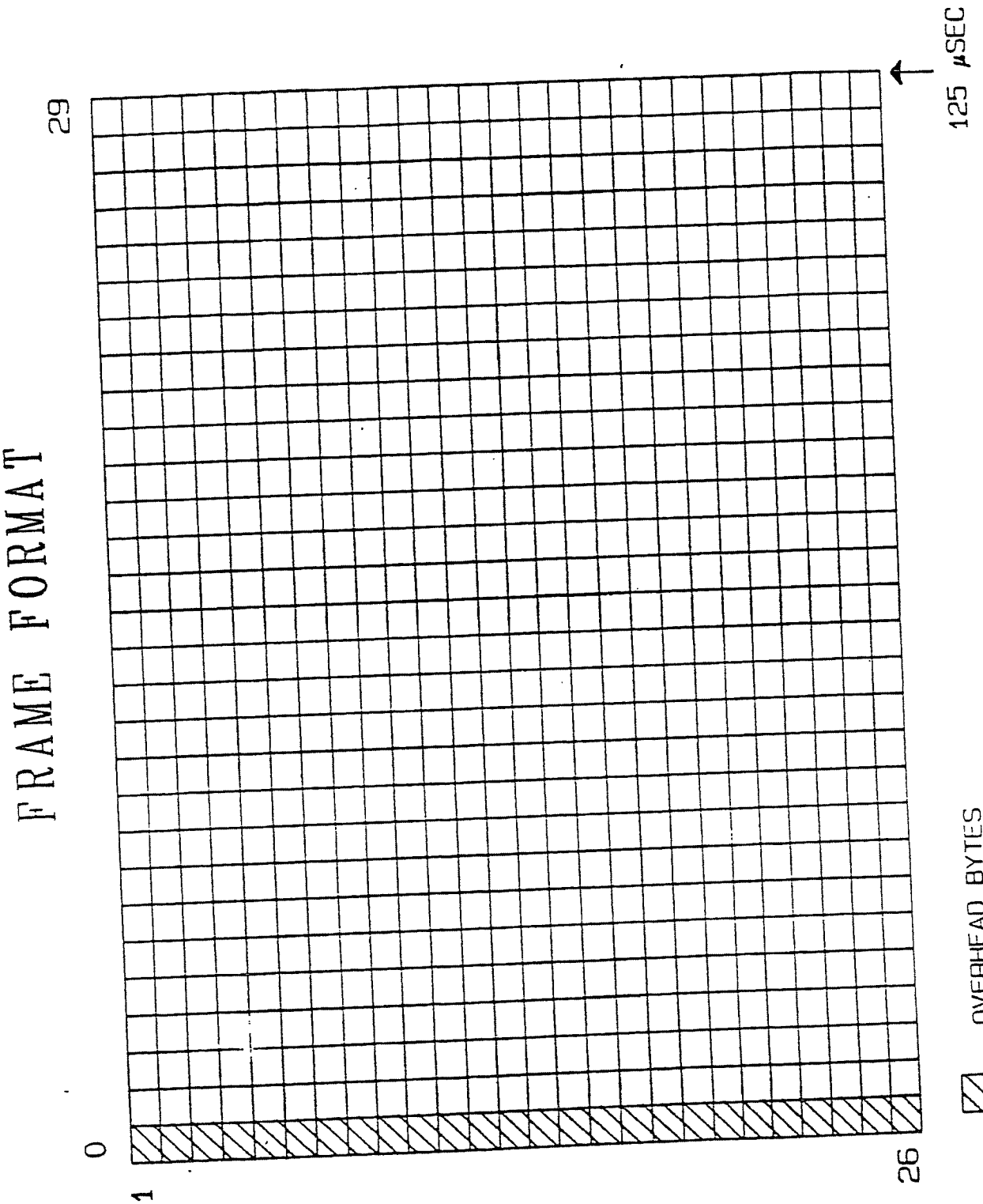


Figure 11

EXHIBIT 12

STANDARDS PROJECT: T1D1.1/85-149

SOURCE: Bell Communications Research
Mark Wm. Beckner, Steven Minzer
435 South Street, Room 2Q268
Morristown, NJ 07960-1961
(201) 829-4477

ISSUES ADDRESSED: A Tutorial on Asynchronous Time Division Multiplexing (ATDM): A Packet Access Capability For Broadband Interfaces to ISDNs

DATE: November 18-22, 1985

DISTRIBUTION TO: T1D1.1 Technical Subcommittee Working Group Members

NOTICE

This contribution has been prepared to assist Standards Committee T1- Telecommunications. Th document is offered to the Committee as a basis for discussion and is not a binding proposal on B Communications Research or the Bell Operating Companies. The requirements are subject to change form and numerical value after more study. Bell Communications Research specifically reserves the ri to add to, or amend, the statements contained herein.

FSI060180

1. Introduction

This tutorial explains Asynchronous Time Division Multiplexing (ATDM),[1] a packet access capability for broadband interfaces to ISDNs. ATDM must not be confused with traditional store-and-forward packet techniques, such as X.25, which were developed to multiplex bursty packetized data over relatively expensive transmission facilities, bandwidth being more expensive than processing. It also must be distinguished from traditional time division multiplexing, referred to as Synchronous Time Division Multiplexing in this tutorial, which is a more rigid approach to partitioning capacity. It will become clear in the course of this tutorial that some objectives of ATDM are to reduce delay associated with packet transport by minimizing processing and to flexibly allocate, not conserve, bandwidth. Unlike traditional packet switching, the high-speed capability described here provides users with continuous, real-time information transfer services at user-specified and network-supported bit rates. These services include existing services currently using circuit-mode capabilities.

ATDM does not necessarily completely supersede circuit-mode access and switching capabilities since some services may require information transfer rates exceeding those that can be handled by packet switching technology. Examples of services that may require circuit-mode access include high quality point-to-point and broadcast video and high-speed bulk data services that use nearly the full capacity of a circuit transport channel.

2. Access Capability Requirements for a Broadband Interface

The access capability requirements for a broadband interface qualitatively differ from those of the basic and primary rate interfaces to ISDNs. A broadband access capability should allow easy subdivision and allocation of the interface capacity to meet the diverse and changing needs of customers requiring *existing* and *future* services. The basic and primary rate interfaces have been defined with existing or imminent services in mind; the characteristics of these being well known. The characteristics of broadband services are not yet well defined or easily recognized. New services with a wide range of required bit rates could be proposed after broadband networks are in use.

A strength of the approach proposed here is its flexibility, allowing networks and users to adapt to a rapidly changing environment. It permits users to dynamically define virtual interface structures meeting their individual service requirements. The proposed broadband access capability implies a simple, flexible procedure to subdivide and allocate interface capacity.

3. Synchronous Physical Layer

Interface capacity can be subdivided at two layers. This section deals with division at the physical layer. The physical layer is synchronous.

Figure 1 shows that the physical capacity of a digital transmission line can appear to higher layer functions as a set of fixed bit rate channels that are multiplexed using synchronous time division multiplexing (STDM) or as a single pipe without physical channels. The use of pipes is sensible if packet handlers are fast enough to support the highest speed transport services offered by the network.

In STDM, recurring frames[1] are divided into a fixed number of time slots, the slot being the basic information carrying unit. Each time slot is permanently assigned to a STDM or physical channel. A familiar example is a DS-1 frame.

Access structures based solely on STDM are practical only if the number and information transfer rates of the channels required by most customers are relatively constant over time, since STDM channels requires a static allocation of the interface capacity.

But even if these conditions do not exist, circuit-mode can still have a prominent place in a broadband access structure for services requiring the entire capacity of a physical channel. As long as information

1. Typically, the frame repetition rate is 125 microseconds.

transfer rates exceeding those that can be handled by packet switching technology are required, there is an important place for switching based on STDM.

ATDM is *not* part of the physical layer.

4. ATDM Virtual Access Structures

ATDM subdivides the capacity of a synchronous physical channel or pipe. The basic information carrying unit is a packet.[2] An ATDM channel is dynamically created upon connection establishment, the network allocating bandwidth for the connection at a user-specified and network-supported information transfer rate. Thus, a given connection over an ATDM channel has a fixed capacity, but the partitioning of the entire capacity of the user-network interface can vary over time. In order to ensure high levels of performance, a network should not allocate bandwidth in excess of physical capacity to ATDM connections.

"Asynchronous" in ATDM does not imply that transmission occurs over an asynchronous physical layer. It is "asynchronous" because there are no assignments of specific time slots of a physical channel (or pipe) to an ATDM channel. Figures 2 and 3 show ATDM channels carry their channel identification as part of a packet header and indicate that packets on these channels are not associated with time slots on a physical channel or pipe. A transmitter can send data in any available slot. Since multiple transmitters can share a line, a protocol must define the rules for access.

Since a user is guaranteed access capacity upon connection establishment, an ATDM channel can support real-time, continuous information transfer, making it suitable for existing circuit-mode bearer services. Capacity on a dedicated ATDM channel should also be permanently reserved for signaling.

5. Access Arrangements

The types of access arrangements over an interface with ATDM capabilities depends on the existence of STDM beneath ATDM supporting a supplementary means for access and allocation of capacity.

If a physical layer features STDM, a user can either establish a circuit-mode connection that uses the entire capacity of a physical channel or a packet-mode connection over an ATDM channel for less capacity. Figure 4 shows four connections. Two connections, one for video and another for bulk data, have been established as circuit-mode on STDM channels 1 and 3 respectively. A packet-mode connection carries data on ATDM channel 4 and another carries voice on ATDM channel 3, both being statistically multiplexed onto STDM channel 0.

If the physical layer appears as a pipe, there is no circuit-mode access option. The packet-mode handling rate must be sufficient to process all telecommunication services. Figure 5 is similar to Figure 4, except that video is now transported over ATDM channel 5 and there is no circuit-mode provision for bulk data. The bandwidth allocated for video on ATDM channel 5 is much greater than the allocation for channel 3, so there should be many more packets sent over channel 5.

6. Concentration

In contrast to traditional store-and-forward packet techniques, ATDM is not a method to concentrate logical channels carrying bursty data over shared transmission facilities. If the network provides a service for sharing capacity among bursty users, the control information is not part of the ATDM packet header and the concentration functions are at a higher level than ATDM packet switching functions.

7. Error Handling

Errors can occur in ATDM control information or in user data. The network could require inclusion of an error detection field as part of the ATDM control data to ensure the integrity of control information, including the ATDM channel number. Although error detection on user data, perhaps using cyclic

2. We use the term "packet" with some hesitation. Although a packet-mode multiplexing technique is used, these "packets" are not handled by X.25-like or other "store-and-forward" functions.

redundancy checks, could be included in a protocol, this function should be a "selectable layer function", and not part of ATDM, which is a "common layer function".[3]. Requiring ATDM functions to ensure the integrity of user data is undesirable. Some broadband services may not require network capabilities above the level of ATDM. Inclusion of these higher level capabilities may not be appropriate; for example, retransmission of packets with errors may not be wanted by real-time applications, such as packetized voice and video. Furthermore, additional delay incurred at these higher level within the network might preclude provision of some services in a packetized format.

8. Additional Protocol Considerations

This section notes some factors to be considered in a protocol for ATDM. ATDM could be implemented with fixed or variable length packets. Also the physical channel or pipe could be slotted[3], requiring the beginning of each packet to be on a slot boundary. If slotted, the capacity is best utilized if fixed length packets of the slot size are transmitted.

Some protocol factors to be considered are:

- the merits of bit stuffing versus knowledge of the length of user data for dealing with data transparency in a high speed environment
- the impact of slotting on contention and access protocols for multiple transmitters, and
- the effect of the choices on bandwidth allocation techniques.

9. Conclusions

A packet-mode access capability such as ATDM should be included as part of the broadband access capabilities for the following reasons:

1. It is a flexible and dynamic approach to supporting a wide variety of existing and future real-time service for customers with diverse needs.
2. It decouples the physical interface structure from services based on ATDM. This can simplify the physical layer components in both terminal and network equipment and isolate it from the introduction of new services in a rapidly changing environment.

REFERENCES

1. Mark Wm. Beckner, Steven Minzer "Proposal for Inclusion of a Packet-Model Access Capability in Broadband Interfaces to ISDNs", T1D1.1/85-113, September 30 - October 4, 1985.

2. Randy Bos, Ed Isganitis and Bryan Whittle, "Design Considerations for ISDN Access Packet Protocol", T1D1.2/85-201.

3. In this context, slot does not refer to the time division slots of the physical layer used to assign physical channels but the partitioning of a physical channel or pipe into blocks of data used for alignment.

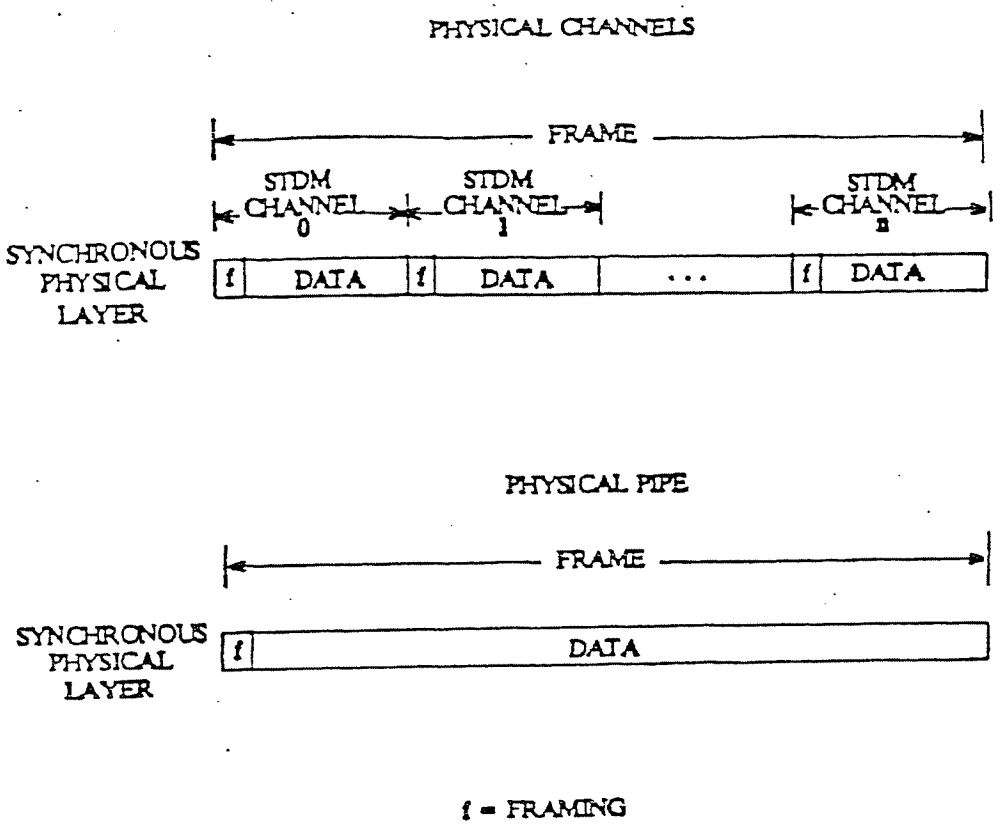
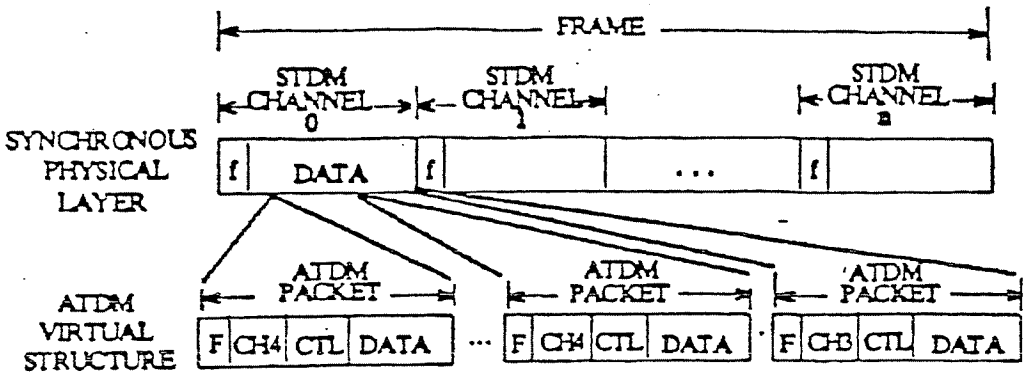
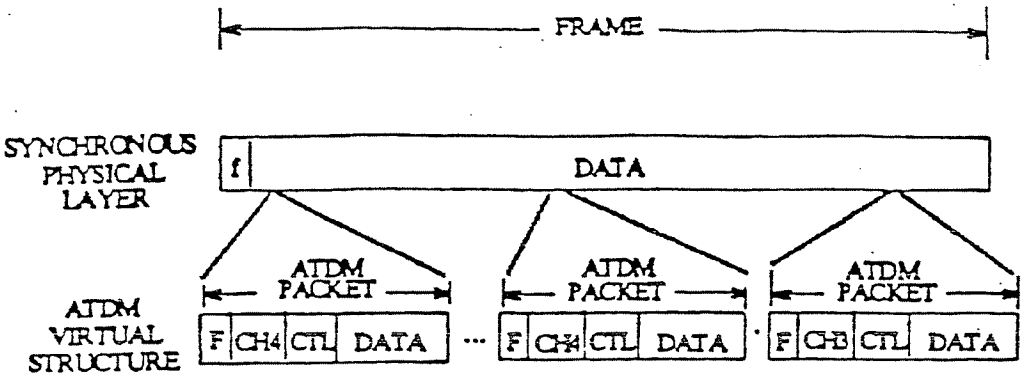


Figure 1. Physical channels and pipes



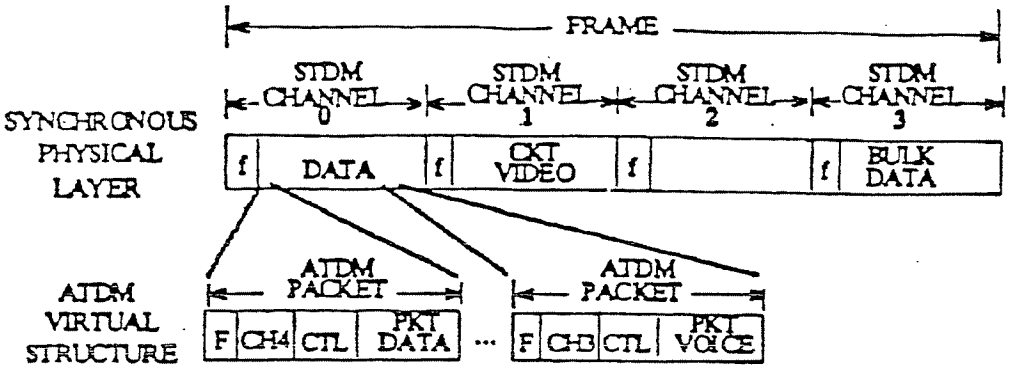
f = FRAMING
F = FLAG
CHn = ATDM CHANNEL n
CTL = ATDM CONTROL DATA

Figure 2. ATDM on a Physical Channel



f = FRAMING
F = FLAG
CHn = ATDM CHANNEL n
CTL = ATDM CONTROL DATA

Figure 3. ATDM on a Pipe



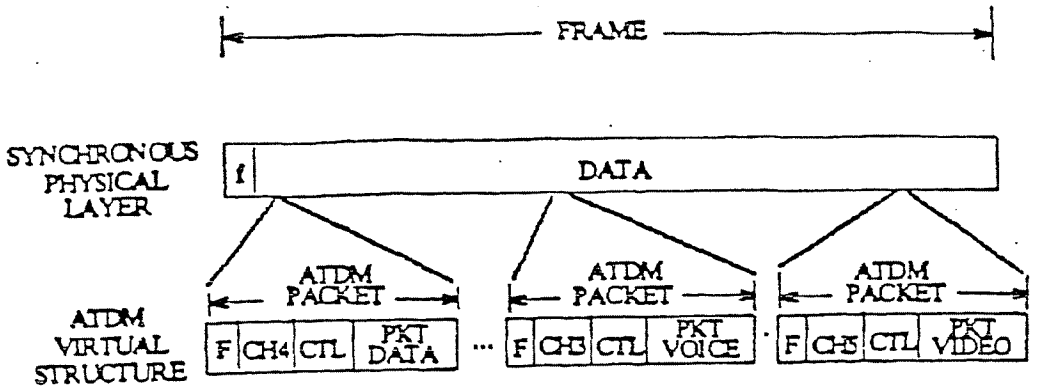
f = FRAMING

F = FLAG

CHn = ATDM CHANNEL n

CTL = ATDM CONTROL DATA

Figure 4. Connections using STDM and ATDM



f = FRAMING
F = FLAG
CHn = ATDM CHANNEL n
CTL = ATDM CONTROL DATA

Figure 5. Connections using ATDM on a pipe

EXHIBIT 13

REDACTED IN ITS ENTIRETY

EXHIBIT 14

Westlaw.

43 Fed.Appx. 379
43 Fed.Appx. 379, 2002 WL 1733333 (Fed.Cir.), 64 U.S.P.Q.2d 1606
(Cite as: 43 Fed.Appx. 379, 2002 WL 1733333 (Fed.Cir.))

H

Briefs and Other Related Documents

This case was not selected for publication in the Federal Reporter.

NOTE: Pursuant to Fed.Cir.R. 47.6, this order is not citable as precedent. It is public record.

Please use FIND to look at the applicable circuit court rule before citing this opinion. Federal Circuit Rule 47.6. (FIND CTAF Rule 47.6.)

United States Court of Appeals,
Federal Circuit.
SOUTHERN CLAY PRODUCTS, INC. Plaintiff-Appellee,
v.
UNITED CATALYSTS, INC. Defendant-Appellant.
No. 01-1382.

July 26, 2002.
Rehearing and Rehearing En Banc Denied Sept. 4, 2002.

Patentee brought action alleging that alleged infringer was violating and causing others to violate two patents relating to manufacture of organophilic clays. The United States District Court for the Southern District of Texas, Hoyt, J., 2001 WL 812359, sua sponte entered judgment as matter of law (JMOL) that patents were valid, enforceable, and infringed, and alleged infringer appealed. The Court of Appeals, Gajarsa, Circuit Judge, held that: (1) one patent was anticipated by prior art; (2) questions of scope and content of prior art and differences between other patent and prior art were for jury; and (3) entry of JMOL on issue of inequitable conduct was improper.

Reversed in part, vacated in part, and remanded.

Mayer, Chief Judge, dissented and filed opinion.

West Headnotes

[1] **Patents 324.1**
291k324.1 Most Cited Cases
Alleged infringer's failure to move for judgment as matter of law (JMOL) did not waive defense that patent was invalid as anticipated by prior art, and thus anticipation issue could be decided as matter of law on appeal, where district court sua sponte entered JMOL in favor of patentee at close of its case in chief, and jury never ruled on issue of sufficiency of alleged infringer's evidence.

[2] **Patents 66(1.24)**
291k66(1.24) Most Cited Cases
Patent for process of making organophilic clay was anticipated by prior art that incorporated by reference all limitations of asserted claims, and thus patent was invalid, even if method disclosed in prior patent for breaking bonds
between colloidal particles in clay particle aggregate was sub-par.

[3] **Patents 314(5)**
291k314(5) Most Cited Cases
Questions of scope and content of prior art and differences between claimed invention and prior art were for jury in patent infringement action in which alleged infringer raised defense of obviousness.

[4] **Patents 313**
291k313 Most Cited Cases
Trial court could not enter judgment as matter of law (JMOL) on issue of inequitable conduct prior to jury verdict in patent infringement action, where materiality of some of prior art references was directly at issue both in validity context and inequitable conduct context.
*379 Before MAYER, Chief Judge, CLEVENGER, and GAJARSA, Circuit Judges.

Opinion for the court filed by Circuit Judge GAJARSA. Dissenting opinion filed by Chief Judge MAYER.

**1 United Catalysts, Inc. ("United") appeals a district court grant of judgment as a matter of law ("JMOL") that two patents owned by Southern Clay Products, Inc. ("Southern Clay"), are valid, enforceable and infringed. *Southern Clay Prods., Inc. v. United Catalysts, Inc.*, No. H-98-1756 *380 (S.D.Tex. Feb.2, 2001) (order granting JMOL). With respect to U.S. Patent No. 4,664,842 ("the '842 patent") this court holds that the district court erred as a matter of law, and the patent is invalid as a matter of law because it is anticipated. With respect to U.S.

© 2006 Thomson/West. No Claim to Orig. U.S. Govt. Works.

Patent No. 5,110,501 ("the '501 patent") we vacate the district court's grant of JMOL for Southern Clay that the patent is not invalid and infringed and remand to the district court for further proceedings. Therefore we *reverse-in-part, vacate-in-part* and *remand.*

BACKGROUND

The '842 and '501 patents, relate to organophilic clays, known as "organoclays." Since the 1950s the process for making organoclays has involved slurrying a hydrophilic, smectite-type clay in water, treating the slurry to remove impurities, reacting the slurry with a quaternary ammonium compound, and finally separating the resulting organophilic clay and drying it. The effect of the reaction with the quaternary ammonium compound is to change the clay so that it is compatible with organic solvents. In order to improve the reaction with the quaternary ammonium compound, it is beneficial to reduce the particle size of the clays prior to reacting them.

This size reduction benefit has been the subject of many patents. In 1976, a British patent GB1439828 ("Laporte") was published, disclosing a process for manufacturing organoclays with a reduced particle size by subjecting the clay to "high shear" conditions before reacting it with the quaternary ammonium compound. In addition, U.S. Patent No. 3,951,850 ("Clocker") issued in 1976, teaches the dispersion of clay particles. The Clocker patent cites to U.S. Patent No. 3,348,778 ("Cohn") that teaches the use of a Manton-Gaulin mill/homogenizer ("Manton-Gaulin") as a method for breaking down the particles.

Southern Clay filed a patent application claiming improvements in the manufacture of organoclays through the use of a Manton-Gaulin to process the clay before it is reacted with the quaternary ammonium compound. The '842 and '501 patents are the progeny of that now-abandoned application. The '842 patent claims the use of the Manton-Gaulin in functional terms, while the '501 patent claims it specifically. Southern Clay asserted five of the six claims of the '842 patent against United. The asserted claims of the '842 patent recite:

1. In a process for manufacture or [sic] an organoclay by reacting a smectiti [sic]-type clay with a higher alkylcontaining quaternary ammonium compound; the improvement enabling enhancement of the gelling properties of said clay, comprising:
subjecting the clay as a pumpable slurry, to high speed fluid shear and substantial average particle size reduction, prior to the said reaction thereof with said ammonium compound, by passing said slurry through a narrow gap across which a pressure differential is maintained causing the slurry at high pressure entering the gap to undergo a rapid increase in velocity with a corresponding decrease in pressure, followed by cavitation as the velocity decreases beyond the gap.

**2 2. A method in accordance with claim 1, further including impacting the clay at a high velocity beyond said gap, against a hard surface to effect further shearing and comminution of said clay particles.

3. A method in accordance with claim 1, wherein the said pressure differential is in the range of 1,000 to 8,000 psig.

*381 5. A method in accordance with claim 1, wherein said shearing and impacting is effected in a homogenizing mill.

6. A method in accordance with claim 1, wherein said pumpable slurry includes less than 25% by weight of solids.

Claims 1 and 2 of the '501 patent read:

1. A process for preparing an organophilic clay gellant comprising:
(a) subjecting a slurry of smectite-type clay having a cation exchange capacity of at least 75 milliequivalents per 100 grams of clay to high shear conditions achieved by passing the slurry at least one time through a Manton-Gaulin homogenizer whereby clay agglomerates are separated, said smectite-type clay having been previously treated to remove non-clay impurities;
(b) reacting the smectite-type clay with organic cation whereby at least some of the cation exchange sites of the smectite-type clay are substituted with organic cation thereby forming an organophilic clay gellant;
(c) separating the organophilic clay gellant; and
(d) drying the organophilic clay gellant.

2. The process of claim 1 in which the high shear conditions are achieved by passing the slurry at least one time through a Manton-Gaulin homogenizer operating at from 1000 to 8000 psig.

Southern Clay brought suit against United alleging infringement of claims 1-3, 5 and 6 of the '842 patent and claims 1 and 2 of the '501 patent. United asserted that the patents were invalid and unenforceable. United also counterclaimed alleging violations of antitrust and state laws. United's organoclay manufacturing process uses a Manton-Gaulin, but only after it breaks up the clay particles by steam-treating the slurry, as taught by Clocker.

United moved for partial summary judgment

© 2006 Thomson/West. No Claim to Orig. U.S. Govt. Works.

regarding infringement, invalidity and unenforceability and Southern Clay moved for partial summary judgment regarding infringement. Although the magistrate judge recommended that the motions for summary judgment be denied because there were triable genuine issues of material fact, the district court judge did not rule on those motions.

During the pre-trial stage the parties filed motions regarding claim construction. The parties stipulated that two claim limitations were at issue: the language in the '842 patent "substantial average particle size reduction," and the language in the '501 patent "whereby clay agglomerates are separated." Only the construction of the first term is challenged on appeal. The district court agreed with Southern Clay that "substantial average particle size reduction" means a reduction in average particle size sufficient to accomplish an enhancement of the gelling properties of the organoclays. *Southern Clay Prods., Inc. v. United Catalysts, Inc.*, No. H-98-1756, slip op. at 5-9 (S.D.Tex. May 9, 2000) (claim construction order).

**3 Before trial, the parties submitted a joint pretrial order outlining the issues for trial. They agreed that disputed issues of material fact remained with respect to infringement, invalidity and unenforceability.

The disputed issues of fact included whether the Clocker patent anticipated the claims of the patents at issue. United argued that Clocker incorporated the use of the Manton-Gaulin through its reference to Cohn, and in the alternative that Clocker inherently disclosed the Manton-Gaulin. A second disputed issue of fact was whether any of the claims at issue would have been obvious based on a combination of the Clocker, Cohn and Laporte patents as well as an article by Simon et al. entitled "Effects of Processing on the *382 Rheology of Thixotropic Suspensions," 50 J. Pharmaceutical Sciences 830 (1961) ("Simon"). A third disputed issue was whether Laporte and Simon were material prior art references withheld from the Patent and Trademark Office with intent to mislead thereby rendering the patents unenforceable for inequitable conduct. Finally, there was a factual dispute about whether Southern Clay had violated federal antitrust laws by procuring its patents through inequitable conduct and then asserting them against United, knowing that they were invalid and unenforceable. Outside of the jury's presence the parties outlined the issues that remained for the jury, both agreeing that the scope and content of the prior art as well as what the prior art taught were questions of fact that the jury must determine. The court accepted this assessment of the factual issues.

At trial Southern Clay presented its case in chief to the jury. It rested without making any motions for JMOL. At the close of the plaintiff's case United made several motions for JMOL, which the district court denied. At that time, however, United did not move for JMOL that the '842 patent was anticipated as a matter of law. Then, before United had the chance to present its case in chief, the district court *sua sponte* granted JMOL for Southern Clay on the issues of infringement, invalidity and enforceability. In response to those rulings, United was allowed to make a proffer without the presence of the jury of the evidence that it would have brought before the jury if had been allowed to do so. The court then allowed United to present evidence only on the issue of damages and to a limited extent on the issue of willfulness, because those were the only issues left for the jury. The jury subsequently found willful infringement of both patents and awarded Southern Clay $20.9 million in compensatory damages, which the court trebled.

United appeals the grant of JMOL of validity and enforceability, asserts that the district court erred in not finding the patents invalid as anticipated, and challenges the district court's claim construction. We have jurisdiction over this appeal pursuant to 28 U.S.C. § 1295(a)(1).

STANDARD OF REVIEW

This court reviews a district court grant of JMOL *de novo*, reapplying the JMOL standard. *Allied Colloids Inc. v. Am. Cyanamid Co.*, 64 F.3d 1570, 1573, 35 USPQ2d 1840, 1841 (Fed.Cir.1995). Under Federal Rule of Civil Procedure 50, a court may grant JMOL against a party on a particular issue only when that party has been fully heard and only where there is no legally sufficient basis for a reasonable jury to find for that party on that issue. Fed.R.Civ.P. 50; *see also Allied Colloids*, 64 F.3d at 1572, 35 USPQ2d at 1841.

**4 An issued patent is presumed valid and the burden is on the party challenging the validity of a patent to show that it is invalid by clear and convincing evidence. *Helifix Ltd. v. Blok-Lok Ltd.*, 208 F.3d 1339, 1346, 54 USPQ2d 1299, 1303 (Fed.Cir.2000). Anticipation is a question of fact. *Atlas Powder Co. v. Ireco, Inc.*, 190 F.3d 1342, 1346, 51 USPQ2d 1943, 1945 (Fed.Cir.1999). Whether and to what extent material has been incorporated by reference into a host document is a question of law. *Advanced Display Sys., Inc. v. Kent State Univ.*, 212

© 2006 Thomson/West. No Claim to Orig. U.S. Govt. Works.

F.3d 1272, 1283, 54 USPQ2d 1673, 1680 (Fed.Cir.2000).

The party asserting a claim of inequitable conduct bears the burden of proving it by clear and convincing evidence. *Purdue Pharma L.P. v. Boehringer Ingelheim GMBH*, 237 F.3d 1359, 1366, 57 USPQ2d 1647, 1652 (Fed.Cir.2001). Inequitable conduct is committed to the discretion of the trial court and is reviewed by this ***383** court under an abuse of discretion standard. Inequitable conduct entails a two-step analysis, requiring first a determination of whether the withheld reference meets a threshold level of materiality and intent to mislead, and second, requiring a weighing of the materiality and intent in light of all the circumstances to determine whether the applicant's conduct is so culpable that the patent should be held unenforceable. *Id.* Both intent and materiality are questions of fact reviewed for clear error. *Therma-Tru Corp. v. Peachtree Doors Inc.*, 44 F.3d 988, 991, 33 USPQ2d 1274, 1279 (Fed.Cir.1995).

DISCUSSION

1. The '842 Patent

As a preliminary matter, Southern Clay argues that the anticipation issue cannot be decided as a matter of law on appeal because United never moved for JMOL on the factual issue of whether Clocker anticipates the asserted claims. In *Young Dental Manufacturing Co., Inc. v. Q3 Special Products Inc.*, this court explained that "[w]here a party fails to make a motion for JMOL at the close of the evidence, the sufficiency of the evidence underlying presumed jury findings cannot be challenged through a renewed motion for JMOL or on appeal.... Nonetheless, the party may challenge the judgment on the ground that the judge committed an error of law or abused his discretion...." 112 F.3d 1137, 1141, 42 USPQ2d 1589, 1592 (Fed.Cir.1997) (citations omitted).

[1] This waiver rule does not apply here. When the judge *sua sponte* granted JMOL in favor of Southern Clay there was no reason to expect that it was "the conclusion of all of the evidence." It would be illogical to require a defendant to file a JMOL on its defenses at the close of the plaintiff's case in chief. In addition, the waiver rule would not apply in this instance because the jury never ruled on the issue of the sufficiency of the defendant's evidence; the judge found it insufficient as a matter of law. Basically the judge made a legal determination that there were no defenses available. The waiver rule mandates stricter deference to jury factual determinations, but it does not require deference to legal determinations. Therefore, it is within our discretion to not only reverse the grant of JMOL for the plaintiff, which is a legal determination, but also, if we find no factual issues in dispute, to grant JMOL of anticipation for United.

****5** United argues that the '842 patent is invalid because it is anticipated by the Clocker patent. Southern Clay asserts that the Clocker patent cannot anticipate the '842 patent because it does not disclose pre-shearing prior to the reaction with the ammonium compound and it does not disclose a substantial average particle size reduction.

In response to these arguments, United argues that Clocker discloses substantial average particle size reduction as that term was construed by the district court. United explains that Clocker's stated purpose is to decrease particle size before treating the clay with a quat. United largely bases its assertion of anticipation on its argument that Clocker teaches reduction of particle size by the use of a Manton-Gaulin through its incorporation by reference of the Cohn patent. In the alternative, United asserts that Clocker inherently discloses reduction of particle size.

United argues that the Clocker patent incorporated the Cohn patent by reference and as a result the Clocker patent expressly discloses each limitation of the asserted claims of the '842 patent. To incorporate by reference the host document must cite the material in a manner that makes clear that it is effectively part of the host document ***384** as if it were explicitly contained therein. The host document must identify with detailed particularity what specific material it incorporates and clearly indicate where that material is found in the various documents. *See Advanced Display Sys.*, 212 F.3d at 1282, 54 USPQ2d at 1679.

In this case the Clocker patent states:

> Exemplary of commonly employed physical or comminuting techniques for breaking the bonds between the colloidal particles in a clay particle aggregate are those techniques disclosed in United States Pat. Nos. Re. 25,965; 3,253,791; 3,307,790; and 3,348,778 [Cohn]. Generally speaking, the techniques disclosed in these patents effect some type of grinding or comminuting either by shear or abrasion so as to break the bonds in the clay aggregate particle and thus form several colloidal particles therefrom.

Clocker, col. 1, ll 46-55. The language in Clocker

© 2006 Thomson/West. No Claim to Orig. U.S. Govt. Works.

clearly states that it is citing Cohn for its bond-breaking methods. In *In re Voss*, the patent stated "Reference is made to [U.S. Pat. No. 2, 920971] ....for a general discussion of glass-ceramic materials and their production." 557 F.2d 812, 816, 194 USPQ 267, 269 (CCPA 1977). The court found that this incorporated the referenced patent because it demonstrated the patentee's intent to make that patent part of the specification. *Id.* at 817, 194 USPQ 270-71.

[2] Southern Clay asserts that merely citing to a reference is not sufficient for incorporation of it, and that Clocker does not clearly identify which material in Cohn is meant to be incorporated. *See Advanced Display*, 212 F.3d at 1282-83, 54 USPQ2d at 1679; *Application of Seversky*, 474 F.2d 671, 674, 177 USPQ 144, 146 (CCPA 1973). We disagree. Clocker specifically identifies that Cohn is relevant for its bond-breaking methods. Southern Clay further argues that because Clocker tells a person of ordinary skill in the art that Cohn's methods are inefficient, there is no intent for Cohn to be effectively part of Clocker, as required for incorporation. Teaching away, however, is neither relevant to the question of anticipation nor to the question of incorporation by reference. By citing to and specifically identifying the bond-breaking techniques discussed by Cohn, Clocker has demonstrated the intent to make that information part of the specification. The fact that the resulting method is taught to be sub-par is irrelevant for purposes of anticipation. *Celeritas Techs., Ltd. v. Rockwell Int'l. Corp.*, 150 F.3d 1354, 1361, 47 USPQ2d 1516, 1522 (Fed.Cir.1998) ("A reference is no less anticipatory if, after disclosing the invention, the reference then disparages it. Thus, the question whether a reference "teaches away" from the invention is inapplicable to an anticipation analysis."). Therefore, Clocker incorporates Cohn by reference. The result is that each and every limitation of the asserted claims of the '842 patent is disclosed. [FN1]

FN1. United has also shown that the asserted dependant claims, 2, 3, 5 and 6, are anticipated. As United explains, Cohn teaches impacting the clay at high velocity against a hard surface, anticipating claim 2. Cohn also teaches the use of pressure from 100 to 6000 psi, anticipating claim 3. In addition, Cohn describes the Manton-Gaulin as a homogenizing, anticipating claim 5. Finally, Clocker teaches the use of a slurry containing less than 25% by weight of solids, anticipating claim 6.

**6 The asserted claims of the '842 patent are invalid as a matter of law as anticipated by Clocker, which incorporates Cohn by reference. As a result, we need not address United's claim construction arguments.

*385 *2. The '501 patent*

United argues that the district court's *sua sponte* grant of JMOL of validity and enforceability should be vacated because it was procedurally and substantively in error. Both parties had agreed that all of United's claims, other than anticipation, turned on highly contested factual issues. Since United bore the burden of proof on invalidity and unenforceability, by denying United the opportunity to present its case in chief the court denied United the opportunity to be fully heard. In general the power to grant JMOL must be exercised with great restraint in order to avoid the possibility that a party will be precluded from presenting facts which make out a question for the jury. *Buchanan v. City of San Antonio*, 85 F.3d 196, 198 (5th Cir.1996). An even greater showing is required where the court grants a JMOL before the jury hears from the defendant. *Id.; see also United States v. Vahlco Corp.*, 720 F.2d 885, 889 (5th Cir.1983). The district court in this case improperly resolved genuine issues of material fact in granting the JMOL.

[3] As the parties stipulated before trial, the validity issues in this case rest on disputed issues of material fact. The scope and content of the prior art and the differences between the claimed invention and the prior art are questions of fact underlying the obviousness determination that should be evaluated by the jury. *Monarch Knitting Mach. Corp. v. Sulzer Morat GMBH*, 139 F.3d 877, 881, 45 USPQ2d 1977, 1981 (Fed.Cir.1998). Given the factual disputes about what the prior art teaches and whether it is different from the claimed invention, appellants must be allowed to present their evidence of anticipation and obviousness to a jury. [FN2]

FN2. It is noteworthy that a claim construction of the term "non-clay impurities" as used in the '501 patent would benefit the parties. Although the parties had stipulated that only two terms needed to be construed and this term was not among them, a review of their arguments to this court indicates that the parties are indeed in dispute about what this term means.

© 2006 Thomson/West. No Claim to Orig. U.S. Govt. Works.

United also asserts that the district court grant of JMOL of no inequitable conduct should be vacated. For support United cites to *Therma-Tru Corp. v. Peachtree Doors, Inc.*, where this court, citing to a number of other circuits, explained that it is well-settled law that when a case involves claims of law and equity and the legal claims are tried by a jury, the jury's verdict is binding on the trial court in its disposition of the equitable claims. 44 F.3d 988, 995, 33 USPQ2d 1274, 1278 (Fed.Cir.1995). In *Therma-Tru* this court found that the judge's determination of inequitable conduct was an abuse of discretion because it was based on a determination that the patentee had intentionally withheld an enabling disclosure from the Patent and Trademark Office, however, the jury had previously found that the patent was valid, and declined to hold that it was not enabled. *Id.* at 993-94, 44 F.3d 988, 33 USPQ2d at 1278-79.

[4] In this case, the inequitable conduct issue has factual questions that are intertwined with the validity issues. The materiality of some of the prior art references is directly at issue both in the validity context and the inequitable conduct context. Therefore, it was inappropriate for the judge to make the legal determination without submitting the factual issues to the jury. Since it was an abuse of discretion for the judge to grant JMOL on the validity issues, we also vacate the court's entry of JMOL that there was no inequitable conduct and remand so that the trial court can decide the question in the context of the jury trial and the jury's factual determinations*386 as to what art is relevant and what is material.

CONCLUSION

**7 Therefore, we reverse the district court JMOL of anticipation of the '842 patent and hold that the asserted claims of the '842 patent, claims 1, 2, 3, 5 and 6, are anticipated as a matter of law. Furthermore, we vacate the district court's JMOL that the '501 patent is not invalid and that there was no inequitable conduct and remand for further proceedings not inconsistent with this opinion. Finally, we vacate the damages award and the grant of attorney fees.

No costs.

MAYER, Chief Judge, dissenting.

MAYER, Chief Judge.

Because United States Patent No. 3,951,850 ("Clocker") does not incorporate United States Patent No. 3,348,778 ("Cohn") by reference, this court errs in concluding that Clocker anticipates U.S. Patent No. 4,664,842 (the '842 patent). And because the district court correctly concluded that United Catalyst could not present sufficient evidence to render U.S. Patent 5,110,501 (the '501 patent) invalid, I would affirm the district court's grant of judgment as a matter of law, the jury's findings that neither the '842 patent nor the '501 patent are invalid, and the finding that both patents are infringed by United Catalyst.

The '842 Patent

The court holds that Clocker anticipates the '842 patent because it incorporates Cohn by reference through the following phrase:

> Exemplary of commonly employed physical or comminuting techniques for breaking the bonds between the colloidal particles in a clay particle aggregate are those techniques disclosed in United States Pat. Nos. Re. 25,965; 3,253,791; 3,307,790; and 3,348,778. Generally speaking, the techniques disclosed in these patents effect some type of grinding or comminuting either by shear or abrasion so as to break the bonds in the clay aggregate particle and thus form several colloidal particles therefrom.

Clocker, col. 1, ll. 46-55. *Ante*, at ----.

Whether a patent incorporates a reference is a question of law and is determined based upon whether one of skill in the art would consider it to have been incorporated. *Advanced Display Sys., Inc. v. Kent State Univ.*, 212 F.3d 1272, 1283, 54 USPQ2d 1673, 1680 (Fed.Cir.2000). "To incorporate material by reference, the host document must identify with detailed particularity what specific material it incorporates and *clearly indicate where that material is found in the various documents.*" *Id.* at 1282, 212 F.3d 1272, 54 USPQ2d at 1679 (emphasis added), *citing In re Seversky*, 474 F.2d 671, 674, 177 USPQ 144, 146 (CCPA 1973) (To incorporate another document by reference, the host document must "clearly identify[ ] the subject matter which is incorporated and where it is to be found."), and *In re Saunders*, 58 C.C.P.A. 1316, 444 F.2d 599, 602-603, 170 USPQ 213, 216-17 (CCPA 1971) (reasoning that a rejection for anticipation is appropriate only if one reference *"expressly incorporates a particular part"* of another reference.) (emphasis added); Manual of Patent Examining Procedure § 608.01(p) (8th ed. Aug.2001) ("Particular attention should be directed to specific

© 2006 Thomson/West. No Claim to Orig. U.S. Govt. Works.

portions of the referenced document where the subject matter being incorporated may be found."). Additionally, "mere *reference* to another application, or patent, or publication is not an *incorporation* of anything ..." *387*In re Seversky*, 474 F.2d at 674, 177 USPQ at 146 (emphasis in original).

**8 The law is clear that in order to incorporate material by reference, an applicant must not only identify the material to be incorporated, but must also "clearly indicate where that material is found in the various documents." The court correctly states that rule yet does not apply it to the facts of this case. Clocker merely identifies four references as being exemplary of commonly employed physical or comminuting techniques for breaking the bonds between the colloidal particles; it does not show where that material can be found in those references. Therefore, Clocker does not incorporate Cohn by reference and cannot anticipate the '842 patent.

Such a relaxed interpretation of the incorporation by reference requirements would have far reaching ramifications. Each examiner in the Patent and Trademark Office ("PTO") is charged with fully reviewing the entire specification of each patent application. *See* Manual of Patent Examining Procedure § 704.01. We have held that incorporating material by reference is the same as if the information were included directly in the host document. *In re Lund*, 54 C.C.P.A. 1361, 376 F.2d 982, 989, 153 USPQ 625, 631 (CCPA 1967). By allowing the phrasing found in Clocker to be sufficient to incorporate material by reference, the court has placed an undue burden on examiners and the PTO. Under the court's reasoning, Clocker would incorporate by reference an additional thirteen patents, none of which has citations to columns or line numbers to ease the burden on the examiner or those of skill in the art who wish to practice the invention.

Besides failing to follow the letter of the law, the court oversteps its bounds by rendering the '842 patent invalid for anticipation on appeal. As we held in *Advanced Display*, "if incorporation by reference comes into play in an anticipation determination, the court's role is to determine what material in addition to the host document constitutes the single reference. The factfinder's role, in turn, is to determine whether that single reference describes the claimed invention." *Advanced Display Sys.*, 212 F.3d at 1283, 54 USPQ2d at 1680. The district court ruled that Clocker did not incorporate Cohn by reference, and therefore, the jury never considered the issue. Holding that Clocker incorporates Cohn by reference requires remand to the district court for an anticipation determination by the factfinder.

The '501 Patent

Because the district court granted judgment as a matter of law at the close of Southern Clay's case-in-chief, this court concludes that United was denied the opportunity to be fully heard on the issue of invalidity. Based upon pretrial stipulations of the parties, the court reasons that the scope and content of the prior art are disputed issues of material fact that should be presented to the jury. This is a mischaracterization of what happened below, the result of which would be a trial of issues on which United clearly cannot sustain its burden.

**9 At trial, the district court imposed a "one-time call rule." In the interest of efficiency, this rule required that each witness was only allowed to take the stand once, regardless of whose witness it was or who called that person to testify. Each party was required to extract all of the evidence it sought to introduce from that witness during that witness's one visit to the stand. During its case-in-chief, Southern Clay called the majority of United's witnesses and United was allowed to make a proffer of the testimony of the few remaining witnesses it intended to call. The proffered evidence falls well short of raising *388 a genuine issue of material fact as to the validity of the '501 patent.

United argues that the '501 patent is anticipated by Clocker either directly because of its incorporation of Cohn or indirectly because it inherently discloses all of the limitations of the claimed invention. As set out above, Clocker fails to incorporate Cohn by reference. Additionally, United did not proffer sufficient evidence of a genuine issue of material fact as to whether Clocker inherently discloses Manton-Gaulin shear. United argued that Clocker's general mention of "high-shear" by definition included Manton-Gaulin shear. "To establish inherency, the extrinsic evidence must make clear that the missing descriptive matter is necessarily present in the thing described in the reference, and that it would be so recognized by persons of ordinary skill. Inherency, however, may not be established by probabilities or possibilities. The mere fact that a certain thing may result from a given set of circumstances is not sufficient." *In re Robertson*, 169 F.3d 743, 745 (Fed.Cir.1999) (internal citations omitted). There are many types of high shear, and United proffers no more than the conclusory statements of its expert, Dr.

© 2006 Thomson/West. No Claim to Orig. U.S. Govt. Works.

Constantine Armeniades, and a document that mentions high shear and Manton-Gaulin shear in the same sentence, to show that one of skill in the art would include Manton-Gaulin shear in high shear. This falls well short of showing that the Manton-Gaulin shear is necessarily present in a description of high shear.

United also argued that British Patent No. 1,439,828 ("Laporte") inherently anticipated the claim limitations of the '501 patent. United admitted that Laporte did not disclose Manton-Gaulin shear, but it argued along the same line of reasoning as set out above in reference to Clocker, that Manton-Gaulin shear was inherent. This argument fails for the same reason it did in Clocker.

United also argued that the '501 patent is obvious over: (1) Clocker in view of Cohn; (2) Clocker in view of Simon et al., *Effects of Processing on the Rheology of Thixotropic Suspensions,* 50 J. Pharmaceutical Sciences 830 (1961) ("Simon"); (3) Laporte in view of Simon; and (4) Laporte in view of Cohn, but there is no issue of material fact as to these references that should have been presented to a jury. Not only does Clocker teach away from Cohn, but United's patent counsel admitted as much in an opinion. United's expert, Armeniades, testified that there was no suggestion or motivation to combine Clocker and Simon. Other than Armeniades unsupported, conclusory opinion that the knowledge of one of skill in the art would yield a suggestion or motivation to combine Laporte and Simon or Laporte and Cohn, he was unaware of any actual suggestion or motivation. While a suggestion or motivation to combine two references may come from the general knowledge of those of ordinary skill in the art, there must be actual evidence of such a suggestion or motivation and the showing must be clear and particular. *In re Dembiczak,* 175 F.3d 994, 999, 50 USPQ2d 1614, 1617 (Fed.Cir.1999) *abrogated on other grounds,* in *In re Gartside,* 203 F.3d 1305, 53 USPQ2d 1769 (Fed.Cir.2000); *see also, Smith Indus. Med. Sys. v. Vital Signs, Inc.,* 183 F.3d 1347, 1356, 51 USPQ2d 1415, 1421 (Fed.Cir.1999) ("That knowledge *may* have been within the province of the ordinary artisan does not in and of itself make it so, absent clear and convincing evidence of such knowledge.") (emphasis in original); *see In re Fine,* 837 F.2d 1071, 5 USPQ2d 1596 (Fed.Cir.1988). The conclusory statements of Armeniades fail to meet this standard, even if taken in a light most favorable to United. *389*In re Dembiczak,* 175 F.3d at 999, 50 USPQ2d at 1617 ("Broad conclusory statements regarding the teaching of multiple references, standing alone, are not "evidence." E.g., *McElmurry v. Arkansas Power & Light Co.,* 995 F.2d 1576, 1578, 27 USPQ2d 1129, 1131 (Fed.Cir.1993) ("[C]onclusory statements, however, are not sufficient to establish a genuine issue of material fact.")).

**10 In addition to failing to proffer adequate evidence of a suggestion or motivation to combine the above mentioned references, United has proffered or presented no evidence to overcome the mountain of evidence submitted by Southern Clay on nonobviousness, the majority of which was educed from United's own employees, five of whom testified that they were surprised by the success that the use of the Manton-Gaulin process achieved. Additionally, Southern Clay presented evidence that United's own attempts to achieve products comparable to Southern Clay's failed until it copied the use of the Manton-Gaulin process.

The issue of infringement was fully presented to the jury who returned a verdict of willful infringement against United. United's only defenses were invalidity or unenforceability and because it cannot prove the elements of those defenses, I respectfully dissent.

43 Fed.Appx. 379, 2002 WL 1733333 (Fed.Cir.), 64 U.S.P.Q.2d 1606

Briefs and Other Related Documents (Back to top)

- 2002 WL 32749323 (Appellate Petition, Motion and Filing) Plaintiff-Appellee's Petition for Rehearing and Suggestion for Rehearing En Banc (Aug. 09, 2002)Original Image of this Document with Appendix (PDF)
- 2001 WL 34633560 (Appellate Brief) Reply Brief for Defendant-Appellant United Catalysts, Inc. (Oct. 19, 2001)
- 2001 WL 34633559 (Appellate Brief) Brief for Plaintiff-Appellee Southern Clay Products, Inc. (Sep. 18, 2001)
- 2001 WL 34633561 (Appellate Brief) Brief for Defendant-Appellant United Catalysts, Inc. (Aug. 06, 2001)
- 01-1382 (Docket) (May. 30, 2001)

END OF DOCUMENT

© 2006 Thomson/West. No Claim to Orig. U.S. Govt. Works.

EXHIBIT 15

REDACTED IN ITS ENTIRETY

EXHIBIT 16

-161

STANDARDS PROJECT: Principles of User-Network Access Interfaces
T1D1.1/87-161

[redacted]

SOURCE: Bell Communications Research, Inc.
M. Wm. Beckner
S. E. Minzer
435 South St.
Morristown, NJ 07960-1961

TITLE: Multiplexing Structures for Broadband Interfaces

DATE: April 1987

DISTRIBUTION TO: T1D1.1 Technical Subcommittee Working Group Members

NOTICE

This document has been prepared to assist Standards Committee T1-Telecommunications. It is offered to the Committee as a basis for discussion and is not a binding proposal on Bell Communications Research or the Bell Operating Companies. The requirements presented in this document are subject to change in form and numerical value after more study. Bell Communications Research specifically reserves the right to add to, amend or withdraw the statements contained herein.

Abstract

This contribution presents some ideas for consideration that may simplify multiplexing structures for broadband interfaces. It describes the manner in which the information payload capacity may be subdivided to provide bearer services flexibly.

1. Introduction

The USA contribution to CCITT Study Group XVIII on broadband interface structures[1] accommodates two approaches to subdivision of user information payload capacity. The abstract[2] for this USA contribution states:

> Two broadband interfaces are proposed, one of about 150 Mbit/s and another of about 600 Mbit/s. Each has a D-channel of at least 64 kbit/s. Signalling should be in the D-channel or in any channel being used for packet mode services. The interface payload (except for the D-channel) can be used for a flexible mixture of all bearer channels, including H_4, which are created on a per-call basis.

This permits flexible assignment of time slots for Synchronous Transfer Mode (STM) based services and further subdivision of synchronously derived channels by Asynchronous Transfer Mode (ATM)[1] packet techniques. Figure 1 depicts a frame based on this approach.

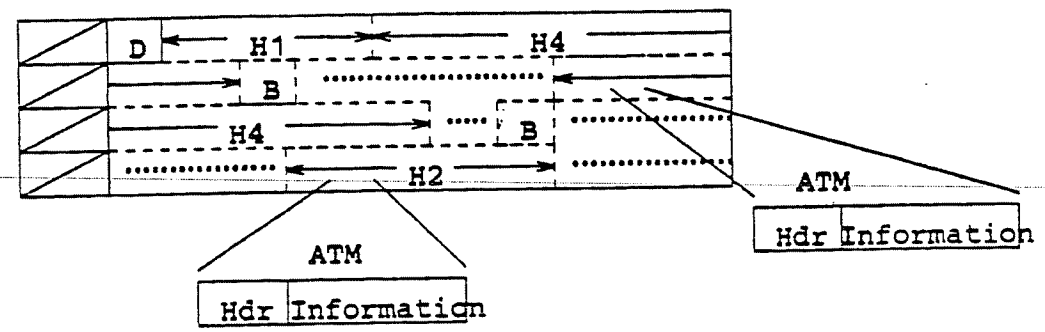


Figure 1. Multiple channel rates with ATM.

Solid lines logically represent fixed partitioning of capacity, while dashed lines represent flexibly assigned time slots. This multiplexing structure may complicate both user and exchange termination functions, since equipment with ATM capabilities must be implemented on top of flexible, multirate STM. Also, if ATM capabilities are available on channels of different rates, rate adaption functions would be necessary to benefit from a common packet switching fabric.

This approach can be further refined and strengthened. The next section presents some ideas for consideration that may simplify the multiplexing structure. It describes the manner in which the information payload capacity may be subdivided to provide bearer services flexibly.

1. Previously the New Transfer Mode, which replaced Asynchronous Time Division (ATD) and Asynchronous Time Division Multiplexing (ATDM)[3].

2. Multiplexing Structures For Broadband Interfaces

For purposes of this contribution, a "superchannel" is defined as the information payload capacity of a SONET STS-3 (about 144 Mbit/s). There is one superchannel in a 149.760 Mbit/s broadband ISDN interface, while four superchannels could be synchronously multiplexed on an STS-12 rate interface. No bearer services are offered at the superchannel rate. Each superchannel is synchronously subdivided into fixed size cells or blocks (see Figure 2). Each cell contains a fixed size header and a fixed size user information part. The header includes a logical address and possibly a header error check. Choices of values for N, M and S will determine how cells are packed into a superchannel. A frame of a superchannel does not have to be completely packed with cells. There can be an unused fragment.

A superchannel can carry services at a variety of bit rates. For example, based on a 5 octet header and 120 octet information part (i.e., N=5, M=120 and S=~~18~~ 90 in Figure 2), on the average, 88 out of 90 cells are required to transport an H_4-rate service, 27 out of 90 for an H_{22}-rate service (about 44 Mbit/s), and 1 out of 90 for an H_{11}-rate service (about 1.5 Mbit/s). Thus, a superchannel could concurrently carry broadband services, narrowband services and signaling.

All cells carrying information contain a logical address. It is also possible to reserve specific cells for specific virtual channels. In this way, it may be possible to simplify implementation of circuit-switched capabilities. For example, using the above numbers for N, M and S, 90 cells can be individually identified in 625 microseconds. 88 of these could be assigned to an H_4 for the duration of a call, 27 for an H_{21}, etc.

The STM mode discussed here is different from traditional STM in format. For a given "bearer channel", *octets* are not equally distributed within a frame. If multiple cells per frame are required for a connection, the *cells* can be distributed. This cell organization will incur some additional delay and buffering requirements.

3. Summary

This contribution introduced the idea of a slotted "superchannel" as a means to a possible common multiplexing structure for ATM- and STM-based interfaces to broadband ISDNs. This structure could support mixtures of bearer services up to and including H_4-rate services. A number of issues such as cell size, cell organization for particular bearer services, etc. remain for further study.

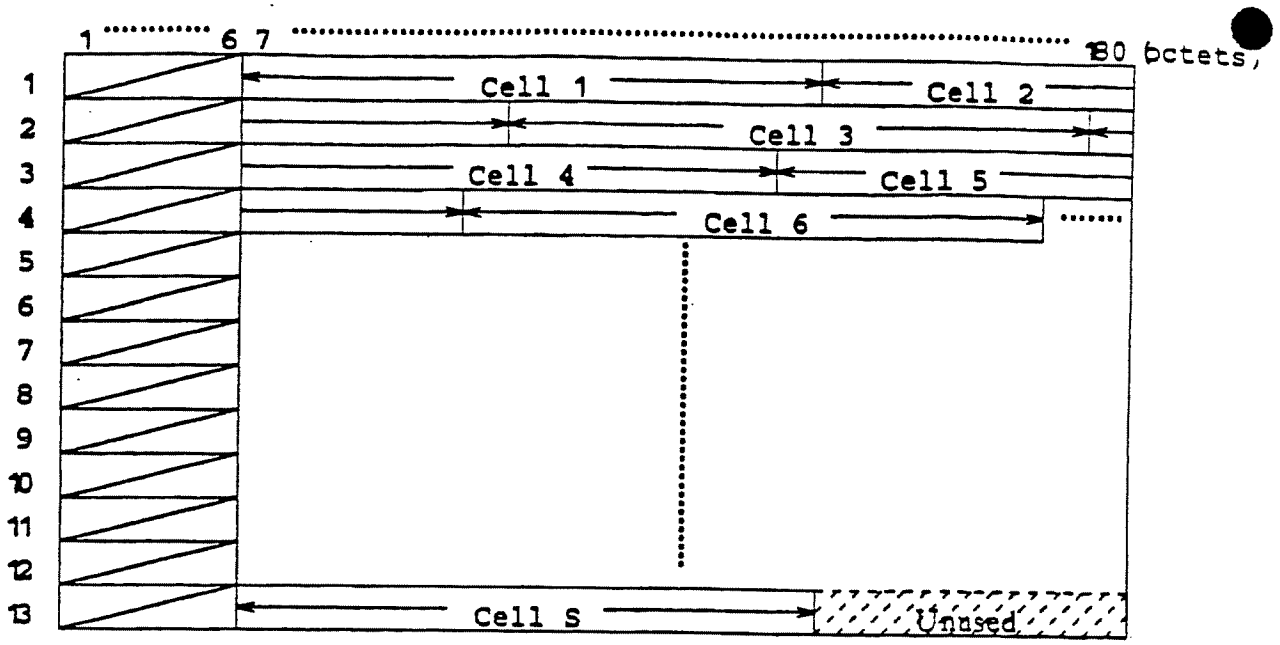
REFERENCES

1. United States of America, "Interface Structures for ISDNs Providing Broadband Services", Delayed Contribution CCITT-No. D.716/ XVIII, Geneva, June-July, 1986.

2. Sub-Working Party XVIII/1-3, "Part B 3 Report of Sub-Working Party XVIII/1-3 (Task Group on Broadband Aspects of ISDN)", CCITT TD.50 (XVIII/1), Geneva, June 30 - July 18, 1986.

3. "A Tutorial on Asynchronous Time Division Multiplexing (ATDM): A Packet Access Capability For Broadband Interfaces to ISDNs", by Mark Wm. Beckner and Steven Minzer, Bell Communications Research, T1D1.1/85-149, November 18-22, 1985.

EXAMPLE OF STS-3 BASED BROADBAND FRAME STRUCTURE



CELL STRUCTURE

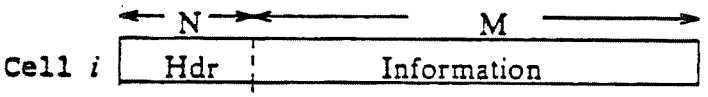


Figure 2. *Multiplexing structure.*