EXHIBIT 7

United States Patent [19]

Beckner et al.

[11] **Patent Number: 4,833,671**

[45] **Date of Patent: May 23, 1989**

[54] **DTDM MULTIPLEXING CIRCUITRY**

[75] Inventors: **Mark W. Beckner**, St. Charles, Ill.; **Frederick D. Porter**, Pittstown, N.J.; **Kuang-I Shu**, Staten Island, N.Y.

[73] Assignee: **Bell Communications Research, Inc.**, Livingston, N.J.

[21] Appl. No.: **118,897**

[22] Filed: **Nov. 10, 1987**

[51] **Int. Cl.**[4] **H04J 3/17**; H04J 3/04

[52] **U.S. Cl.** **370/80**; 370/112

[58] **Field of Search** 370/80, 94, 112, 84, 370/79, 95, 56, 60

[56] **References Cited**

U.S. PATENT DOCUMENTS

4,082,922	4/1978	Chu	370/80
4,083,823	6/1978	Chu	370/80
4,744,079	5/1988	Csapo et al.	370/112
4,759,014	7/1988	Decker et al.	270/84

OTHER PUBLICATIONS

R. W. Muise et al., "Experiments in Wideband Packet Technology", Proc 1986, International Zurich Seminar on Digital Communications, pp. 136–138.

W. W. Chu, "A Study of Asynchronous Time Division Multiplexing for Time Sharing Computer Systems", Proc AFIPS, vol. 35, pp. 669–678, 1969.

A. Thomas et al., "Asynchronous Time Division Techniques: an Experimental Packet Network Integrating Video Communication", Proc International Switching Symposium, May 1984.

Primary Examiner—Robert L. Griffin

Assistant Examiner—Wellington Chin

Attorney, Agent, or Firm—James W. Falk

[57] **ABSTRACT**

A multiplexer for multiplexing a plurality of relatively sparsely occupied DTDM bit streams into a single more densely occupied DTDM bit stream at the same bit rate is disclosed. The multiplexer comprises a plurality of line buffers for recognizing and queuing incoming DTDM frames and a central server unit for placing data from the incoming DTDM frames in the more densely occupied outgoing DTDM bit stream.

5 Claims, 10 Drawing Sheets

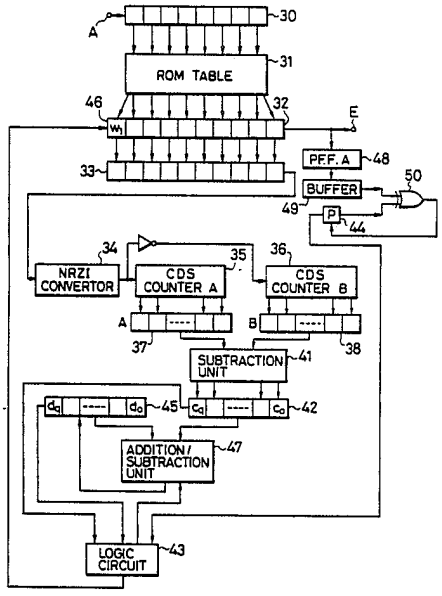

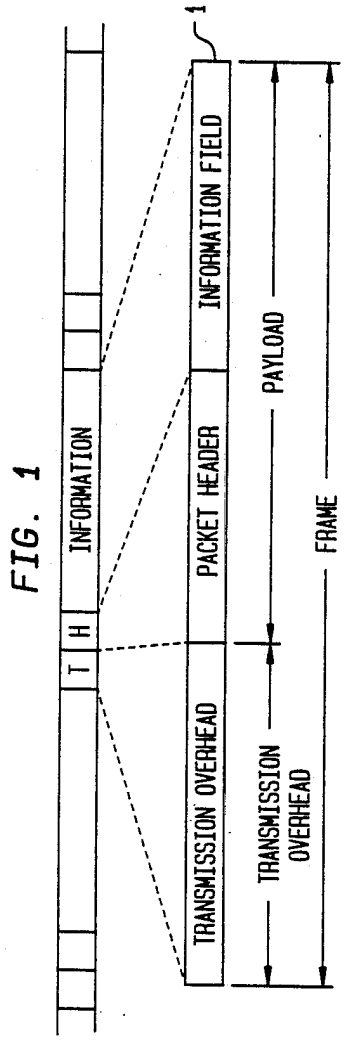
1
INFORMATION FIELD
PACKET HEADER
TRANSMISSION OVERHEAD
INFORMATION
T
H
PAYLOAD
TRANSMISSION OVERHEAD
FRAME

FIG. 1

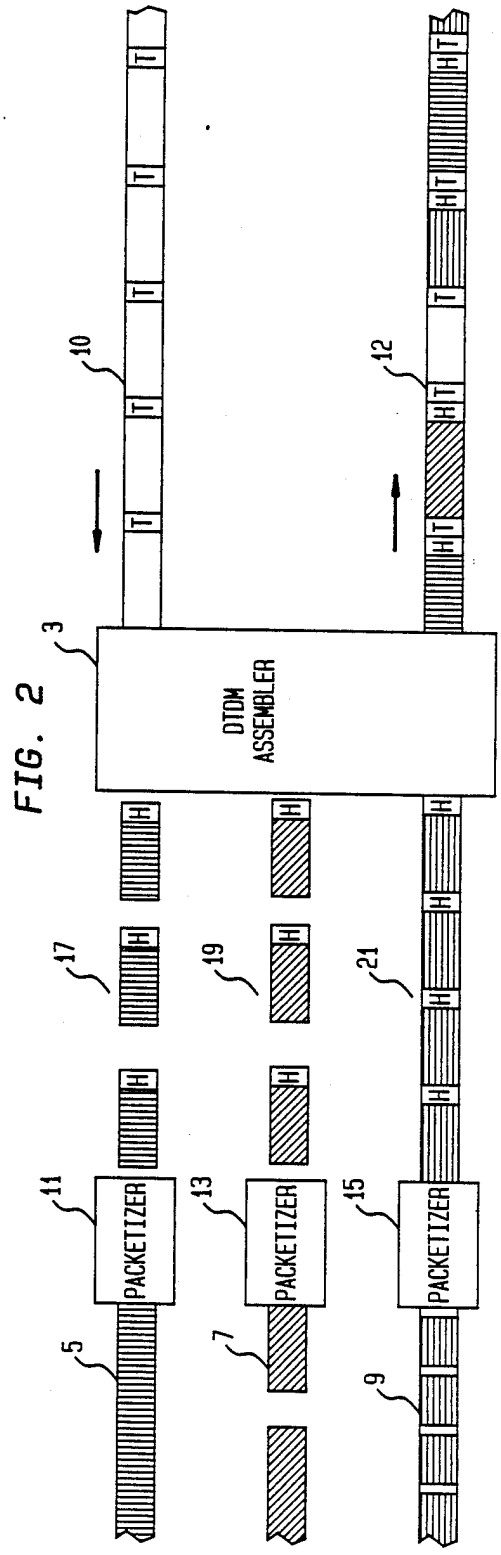
10
12
3
DTDM ASSEMBLER
17
19
21
11
13
15
PACKETIZER
PACKETIZER
PACKETIZER
5
7
9
T
H

FIG. 2

FIG. 3

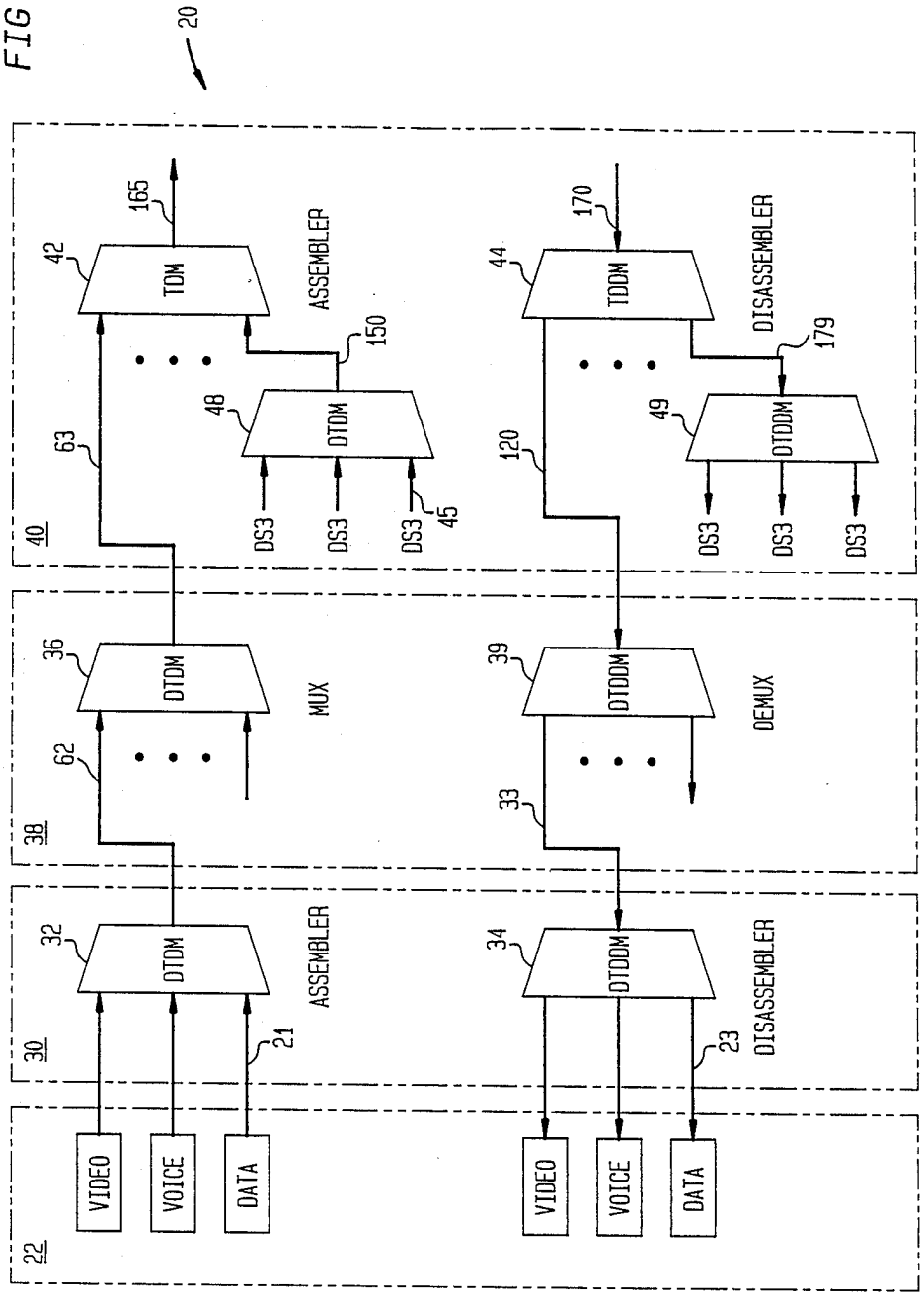
20
165
42
TDM
ASSEMBLER
150
48
DTDM
63
DS3
DS3
DS3
45
40
170
44
TDDM
DISASSEMBLER
179
49
DTDDM
120
DS3
DS3
DS3
36
DTDM
MUX
62
38
39
DTDDM
DEMUX
33
32
DTDM
ASSEMBLER
21
30
34
DTDDM
DISASSEMBLER
23
VIDEO
VOICE
DATA
22
VIDEO
VOICE
DATA

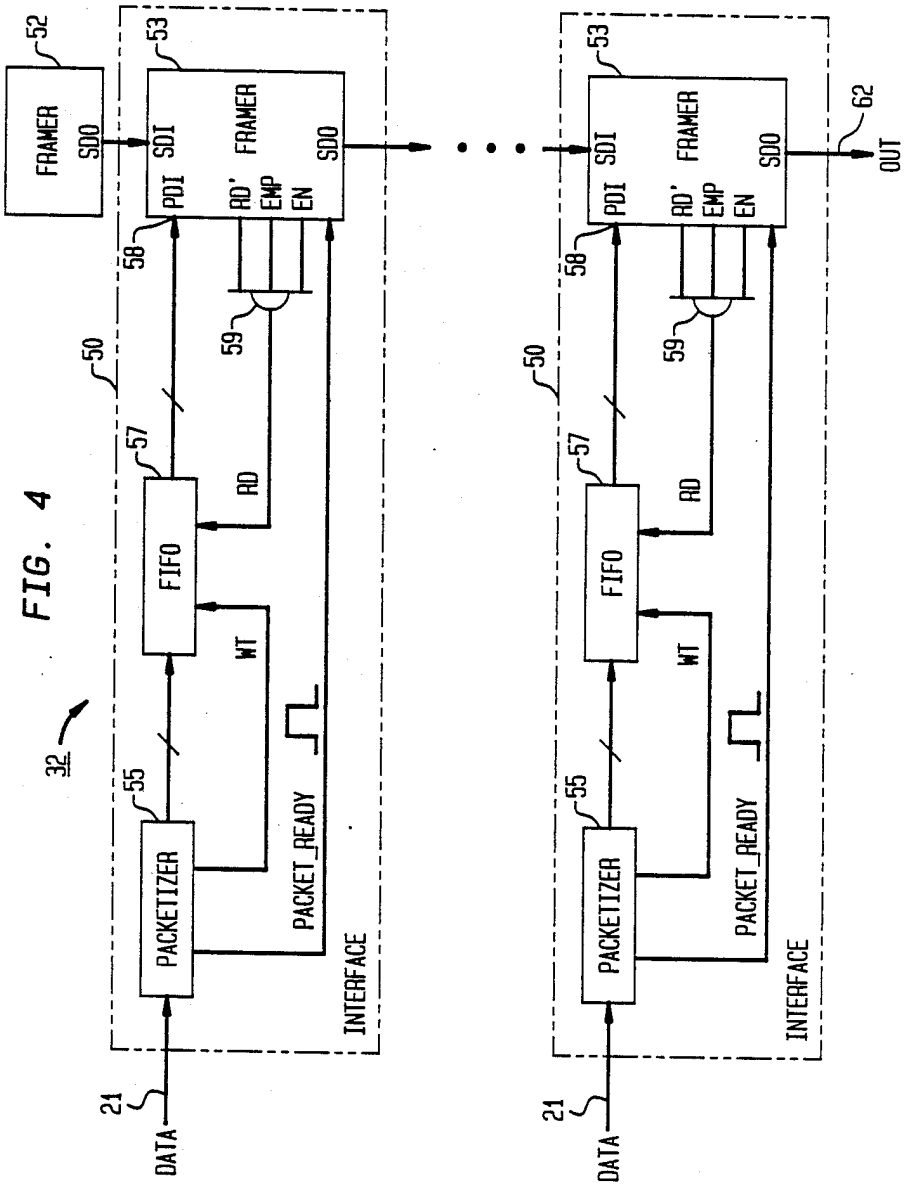
FRAMER
SDO
52
53
SDI
FRAMER
PDI
RD'
EMP
EN
SDO
58
59
50
57
FIFO
RD
WT
55
PACKETIZER
PACKET_READY
INTERFACE
21
DATA
62
OUT

FIG. 4

FIG. 5

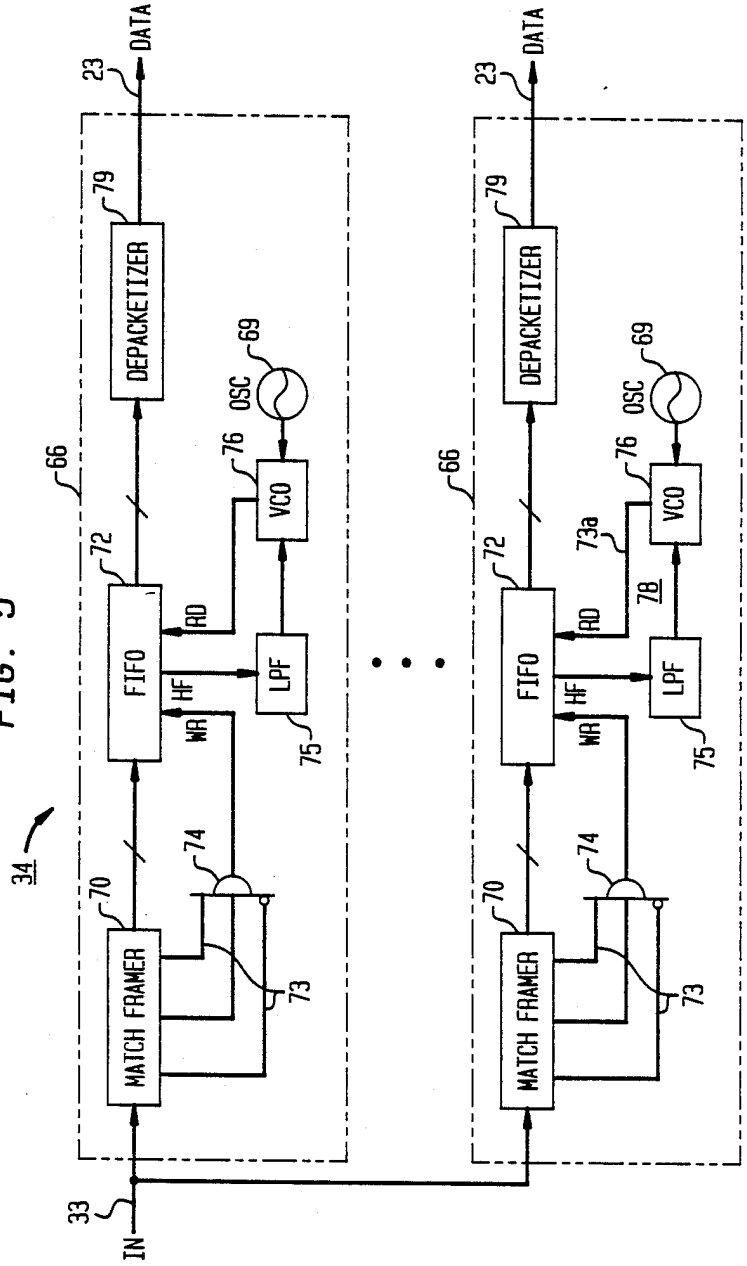
34
33
IN
23
DATA
79
DEPACKETIZER
66
72
FIFO
RD
WR
HF
70
MATCH FRAMER
74
73
69
OSC
76
VCO
73a
78
75
LPF

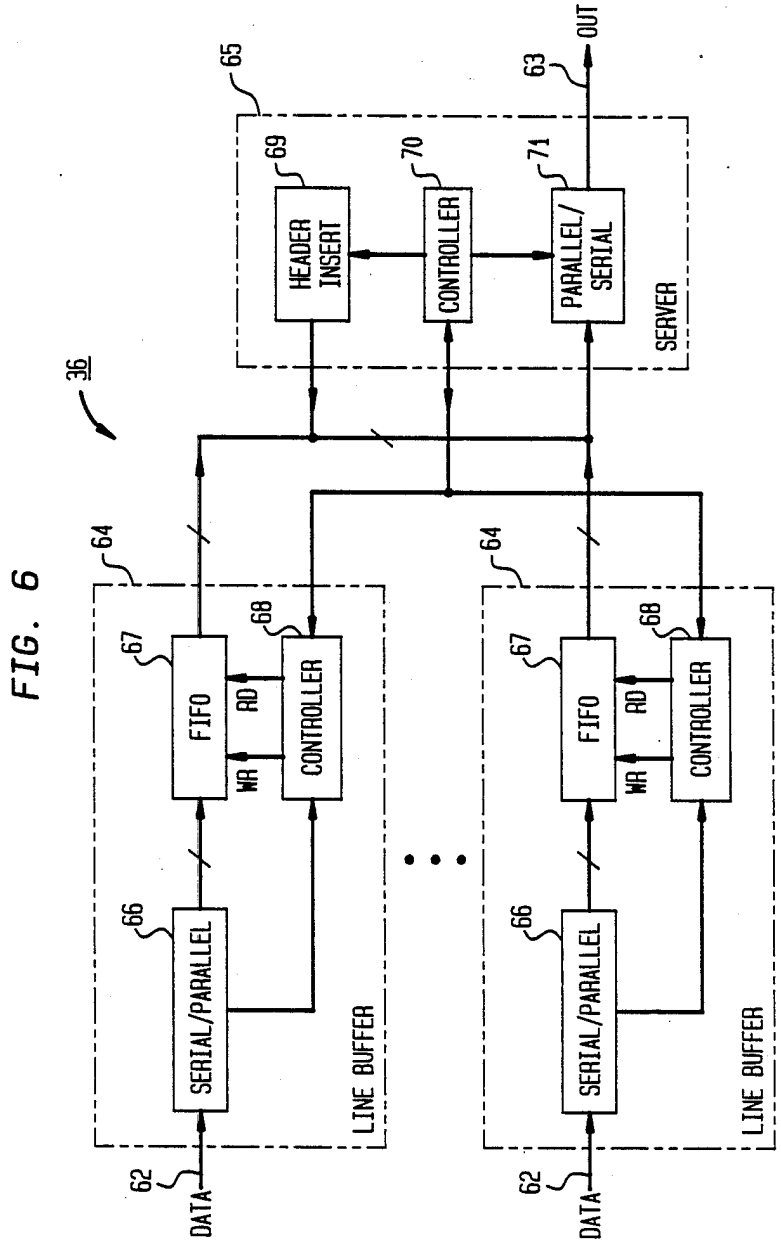
36
65
63
OUT
69
70
71
HEADER INSERT
CONTROLLER
PARALLEL/ SERIAL
SERVER
64
64
67
68
FIFO
RD
WR
CONTROLLER
66
SERIAL/PARALLEL
LINE BUFFER
62
DATA

FIG. 6

FIG. 7

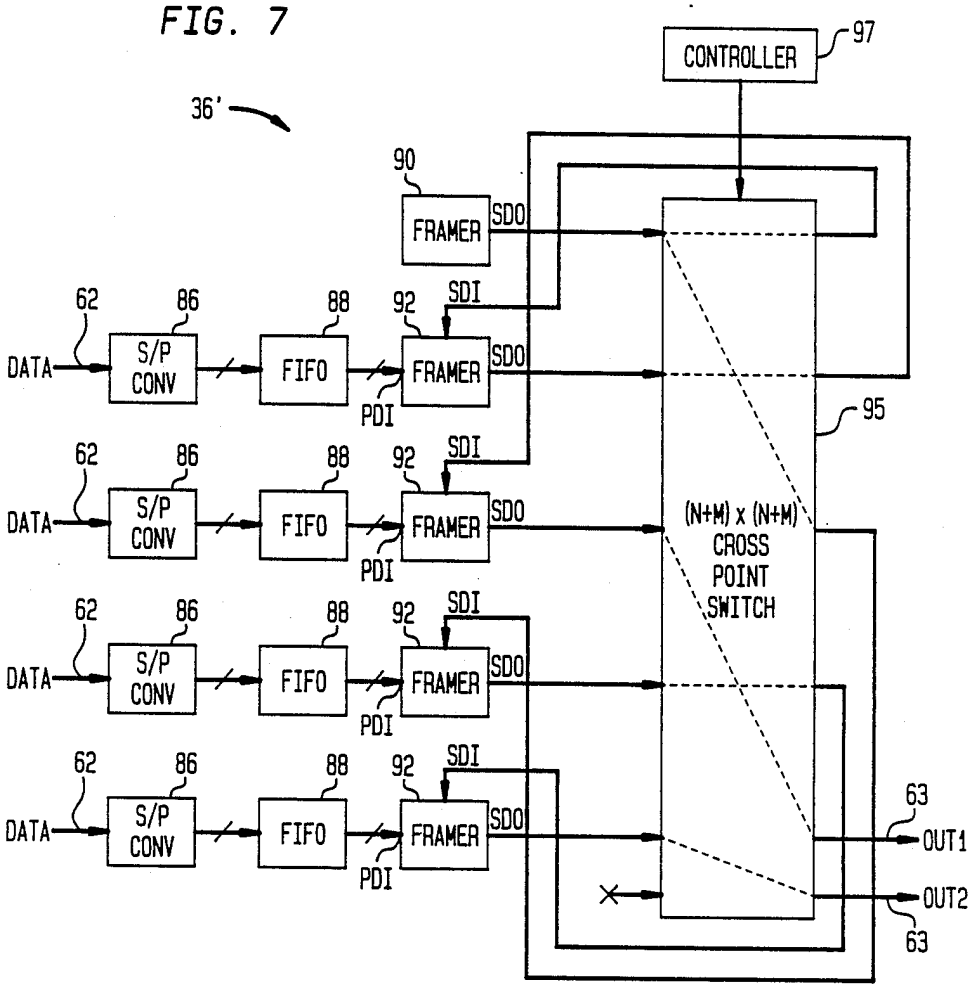
CONTROLLER
97
36'
90
FRAMER
SDO
SDI
62
86
88
92
DATA
S/P CONV
FIFO
FRAMER
PDI
95
(N+M) x (N+M) CROSS POINT SWITCH
63
OUT1
OUT2

FIG. 8

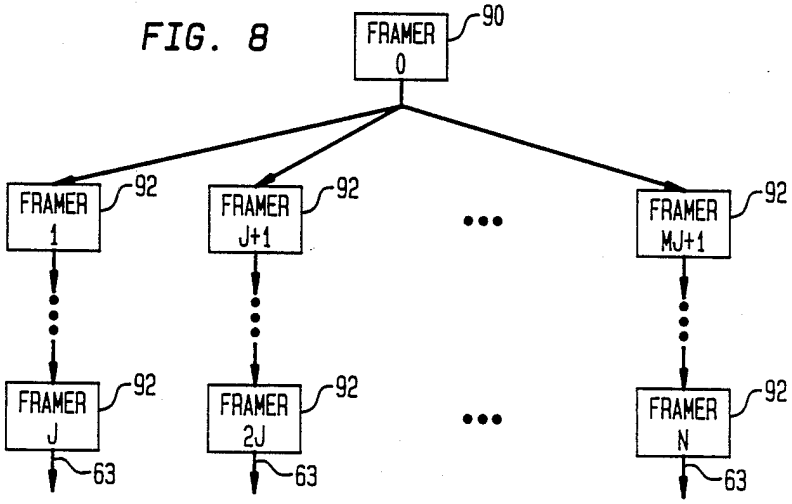
FRAMER 0
90
FRAMER 1
FRAMER J+1
FRAMER MJ+1
FRAMER J
FRAMER 2J
FRAMER N
92
63

FIG. 9

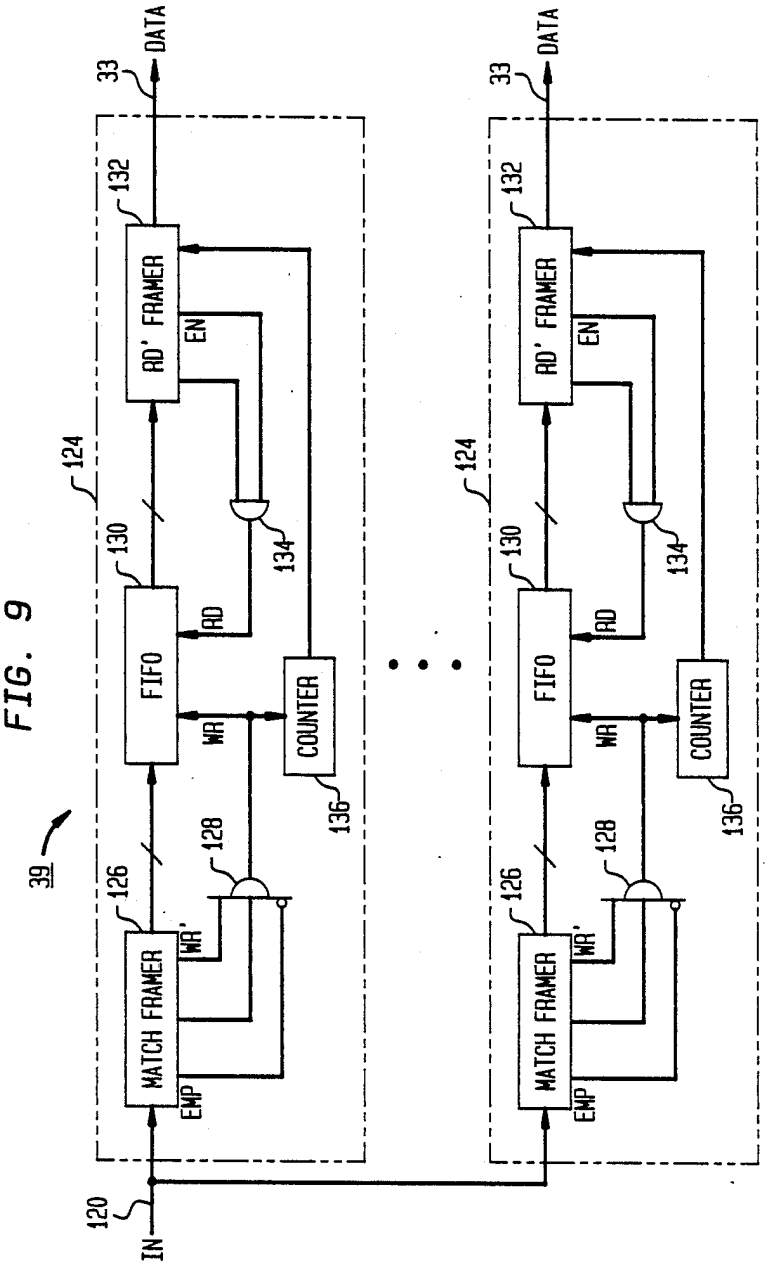
39
120
IN
124
126
MATCH FRAMER
WR'
EMP
128
130
FIFO
WR
RD
132
RD' FRAMER
EN
134
136
COUNTER
33
DATA

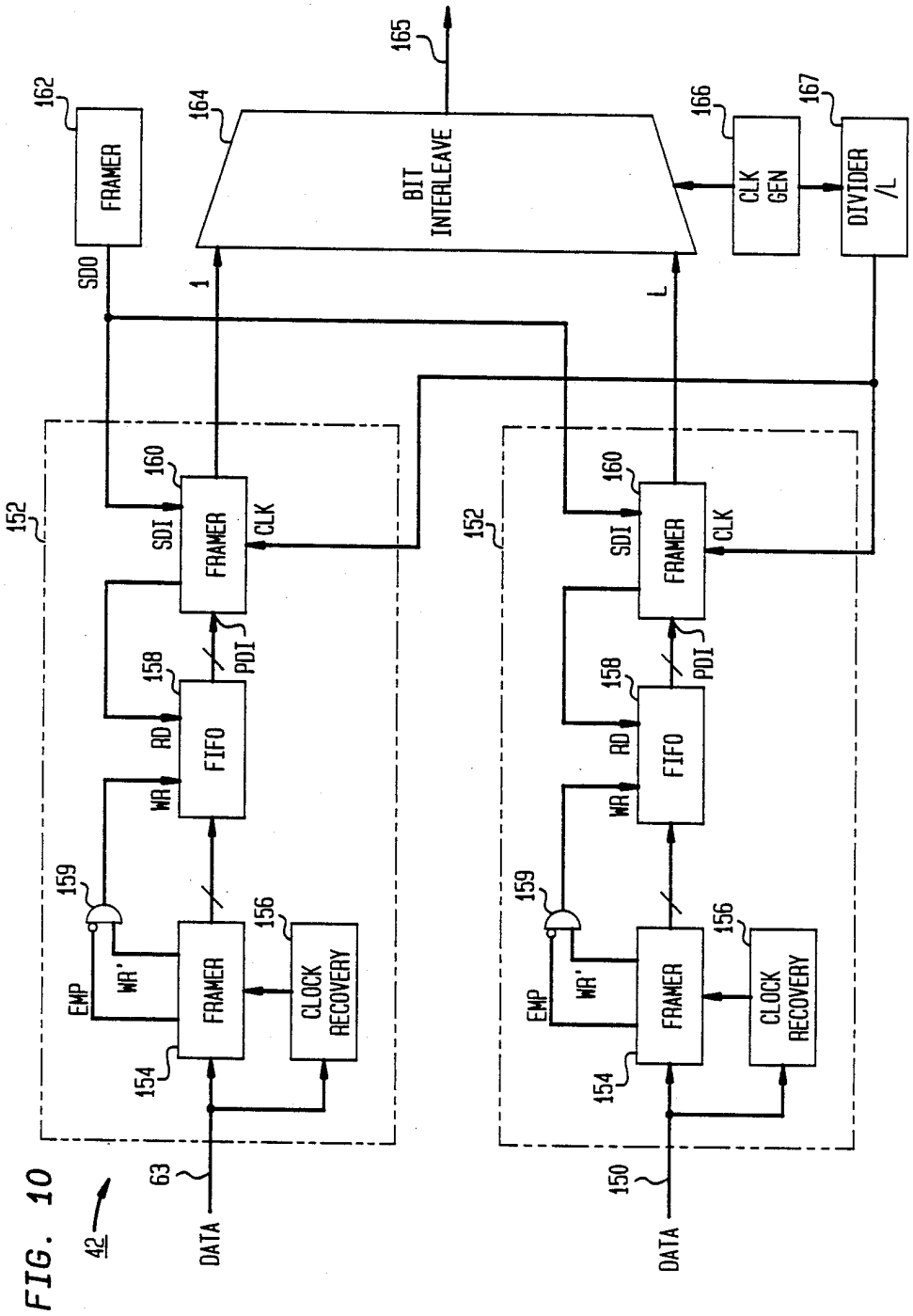
165
162
FRAMER
164
BIT INTERLEAVE
166
CLK GEN
167
DIVIDER /L
SDO
1
L
152
160
SDI
FRAMER
CLK
158
RD
FIFO
PDI
WR
159
EMP
WR'
156
CLOCK RECOVERY
154
63
DATA
150

FIG. 10

FIG. 11

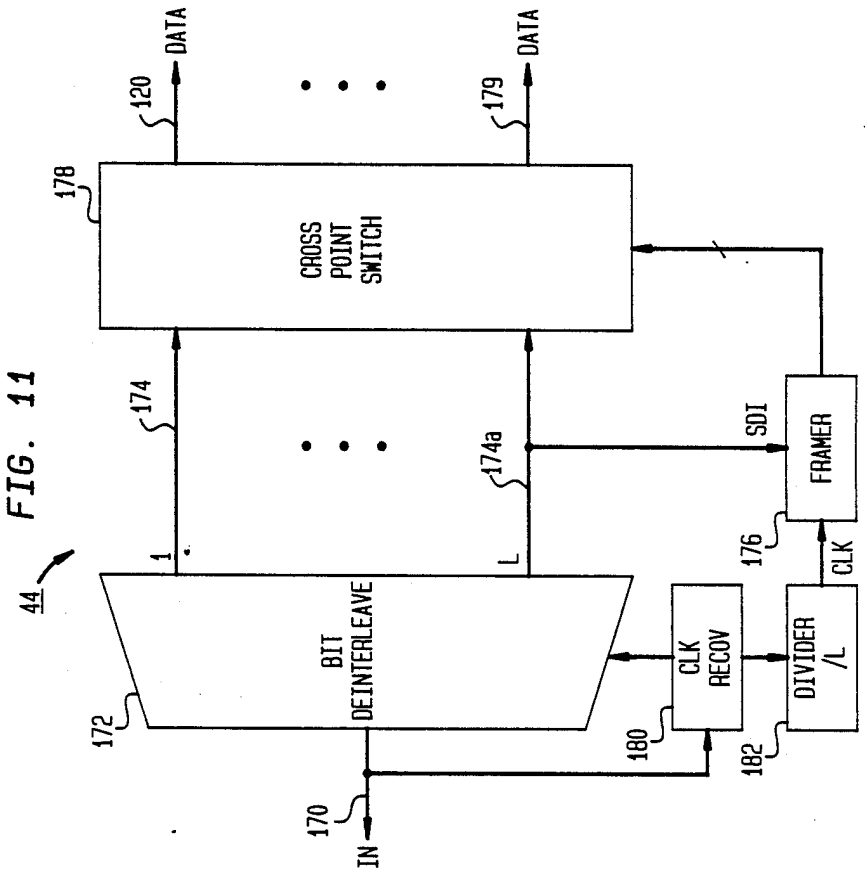
DATA
120
DATA
179
178
CROSS POINT SWITCH
174
174a
SDI
FRAMER
176
CLK
44
1
L
BIT DEINTERLEAVE
CLK RECOV
DIVIDER /L
172
180
182
170
IN

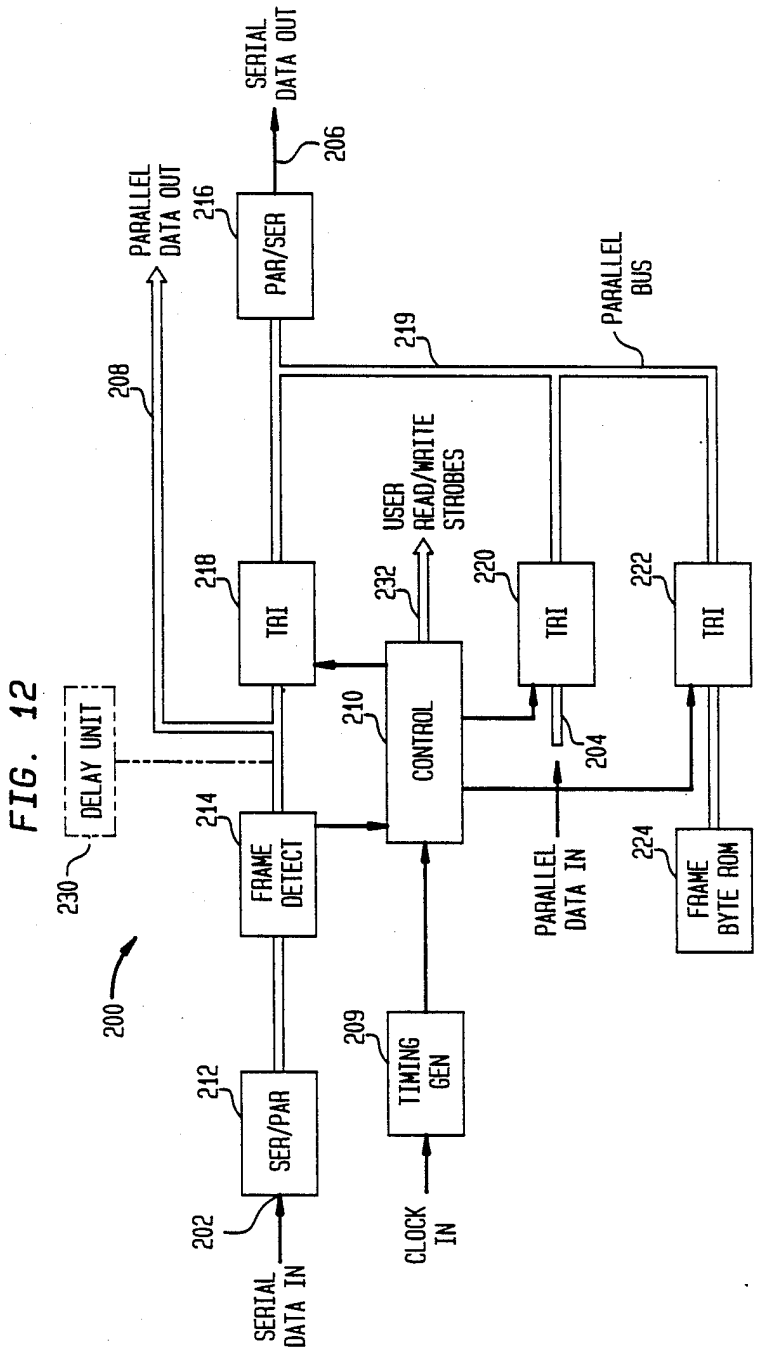
SERIAL DATA OUT
206
PARALLEL DATA OUT
216
PAR/SER
PARALLEL BUS
219
208
USER READ/WRITE STROBES
218
TRI
232
220
TRI
222
TRI
DELAY UNIT
230
210
CONTROL
204
214
FRAME DETECT
PARALLEL DATA IN
224
FRAME BYTE ROM
200
209
TIMING GEN
212
SER/PAR
202
CLOCK IN
SERIAL DATA IN

FIG. 12

DTDM MULTIPLEXING CIRCUITRY

RELATED APPLICATIONS

The following applications contain subject matter related to the subject matter of the present application, are assigned to the assignee hereof and have been filed on the same date as the present application.

1. H. J. Chao, "DTDM multiplexer With Cross Point Switch" having Ser. No. 118,979
2. H. J. Chao, S. H. Lee, L. T. Wu, "Dynamic Time Division Multiplexing" having Ser. No. 118,977
3. H. J. Chao, S. H. Lee, "Time Division Multiplexer for DTDM Bit Streams" having Ser. No. 118,978
4. M. W. Beckner, H. J. Chao, T. J. Robe, L. S. Smoot, "Framer Circuit" having Ser. No. 118,898

FIELD OF THE INVENTION

The present invention relates to a data transmission technique referred to herein as Dynamic Time Division Multiplexing (DTDM) and a set of multiplexers and demultiplexers required to apply DTDM in an actual telecommunications network. DTDM is capable of effectively handling both circuit and packet traffic and thus provides a migration strategy between the present circuit switched telephone network and the future broadband packet switched network. More particularly, the present invention relates to a centrally controlled multiplexer for combining a plurality of relatively sparsely occupied DTDM bit streams into a more densely occupied DTDM bit stream of the same bit rate.

BACKGROUND OF THE INVENTION

Presently, there are significant uncertainties when it comes to predicting the future demand for broadband telecommunications services such as high definition video and interactive data communications. This uncertainty in the future demand for broadband telecommunications services has a significant impact on the design of public telephone networks. First, to satisfy the unknown growth pattern in future service demands, it is desirable to have a robust network design that can be easily modified in response to changes in demand for particular telecommunications services. Second, the network must be able to handle vastly different types of traffic ranging from low speed data and voice to full motion video. Third, depending on the demand for wideband services, a network design must be capable of providing a migration strategy from existing copper wires and circuit transmission and switching facilities to optical fibers and the succeeding generations of high speed packet transmission and switching facilities, which packet facilities are used in connection with the delivery of wideband telecommunications services. These three criteria determine the selection of the three major components of a network design: network topology, transmission systems and switching systems. Here, the concern is primarily with transmission systems and transmission techniques which meet the foregoing criteria.

Two important types of commercially used transmission systems are circuit systems and packet systems. Typically, circuit systems utilize time division multiplexing (TDM) as a transmission technique. When TDM is used, each data stream comprises frames which are subdivided into slots. Corresponding slots in each frame are allocated to specific connections. For example, the first slot in each frame is allocated to one specific connection and the second slot in each frame is allocated to a second connection, etc. Each frame also includes a field which contains transmission overhead information including frame synchronization words and control words. This traditional circuit transmission format can be extended to multiple bit rate services by allocating multiple slots in each frame to high bandwidth services. In such circuit transmission systems, a combination of space division switching and time division switching is utilized at the network switches to swap time slots between various bit streams so that connections to and between specific subscribers are established.

Historically, the first digital circuit transmission systems were introduced during the 1960's. These first digital circuit transmission systems were introduced in inter-office trunking applications to carry 24 voice channels by a single 1.544 Mb/sec digital stream. This is known as the DS-1 signal. Subsequently, the wide deployment of digital channel banks in the public telephone network required the multiplexing of several DS-1 signals into a higher speed bit stream to efficiently utilize available transmission links. As the network grew further, continuing efforts to effectively multiplex tributaries having different bit rates into a common bit stream resulted in the well-known hierarchical multiplexing plan comprising the DS-1 (1.544 Mb/sec), DS-1C (3.152 Mb/sec), DS-2 (6.312 Mbit/sec), DS-3 (44.736 Mb/sec) and DS4 274.176 Mb/sec signals.

Conventional circuit transmission systems suffer from a number of shortcomings. Perhaps the most important problem is the multiplexing hierarchy itself. An important result of the hierarchy is an inherent lack of flexibility. Since the network can only transmit the set of signals in the hierarchy, every telecommunications service has to meet the stringent interface requirement of given hierarchical signal bit rates, instead of the particular service being able to transmit at its own natural bit rate. Therefore, the packet mode of transmission which is inherently bit rate flexible is favored for future broadband networks which are to be adapted to deliver enhanced telecommunication services such as high definition video and interactive data communications.

In contrast with circuit transmission systems which transmit data in frames subdivided into slots, packet transmission systems transmit data in discrete blocks or packets, with each packet having an address header at the front thereof. At the network switches, packets are routed from a specific input line to a specific output line, based on address information contained in the packet header. In this way data packets can be routed from a particular subscriber location, through a telecommunications network, to another subscriber location. Packet transmission techniques and especially fast packet transmission techniques (see e.g., R. W. Muise et al., "Experiments in Wideband Packet Technology", Proc 1986 International Zurich Seminar on Digital Communications, pp. 136–138) are inherently bandwidth flexible (i.e. the number of packets generated by a given service per unit time is flexible) and thus are suitable for wideband enhanced communications services. Accordingly, it is desirable to introduce packet transmission technology into the public telephone network, which up to now is based primarily on circuit transmission technology.

The commonly-held view as to how to introduce packet technology into the public network is to deploy a packet overlay network because the existing network is optimized for circuit transmission and is therefore incompatible with packet transmission techniques. Accordingly, many deployment strategies recommend constructing an overlay packet network for a set of wideband services and hope that the migration of new services to the packet overlay network will allow the existing circuit transmission network to be phased out slowly. The main advantage of a packet overlay network is the quick realization of an end-to-end network for new services. However, the approach requires a large initial capital investment and increases operational cost by requiring the management of multiple separate networks.

Accordingly, it is desirable to provide an alternate approach for introducing packet transmission technology into the public telephone network, which approach requires the replacement of existing transmission components but not the implementation of an entirely new network. Thus, it is desirable to provide a digital data transmission system capable of handling both existing hierarchical circuit traffic and packet traffic.

In connection with the foregoing, it should be noted that recent advances in network switch designs have blurred the distinction between packet networks and circuit networks. A typical switch for use in a telecommunications network has three major components: control processor, switch interfaces, and interconnection network. The control processor handles call set-up and tear-down, maintenance and administrative functions. The switch interfaces convert transmission formats (i.e., the format data has when transmitted between switching nodes) to switch formats (i.e., the format data has when processed within switching nodes). The interconnection network routes information blocks from specific input lines to specific output lines of the switch. For the existing digital circuit systems used in the public telephone network, the information in a specific time slot on an incoming line is transferred, via the switch, to a specific time slot on an outgoing line. Thus, the interconnection network serves as a cross-connect for the incoming signals on a slot-by-slot basis.

It has recently been shown (see e.g., U.S. patent application Ser. No. 021,664 entitled Time Division Circuit Switch, filed on Mar. 4, 1987 and assigned to the assignee hereof) that a switch for use in a circuit network can be built using a self-routing packet interconnection network. An example of such a self-routing packet network is the Batcher-banyan network. Based on the address headers associated with fixed sized packets, the Batcher-banyan network routes a plurality of packets in parallel to specific destination addresses (i.e., specific output lines) without internal collisions. Thus, to mimic the operation of the conventional time-space-time switches used in circuit networks, switch interfaces are provided which perform the time slot interchange function and which are able to insert headers in front of circuit slots to convert such slots into packets for routing through the self-routing interconnection network and able to remove headers from packets leaving the self-routing inter- connection network to reconvert packets back into conventional circuit time-slot format.

In addition to circuit and packet transmission, another mode of digital transmission is known as Asynchronous Time Division Multiplexing (ATDM). See e.g., W. W. Chu "A Study of Asynchronous Time Division Multiplexing for Time Sharing Computer Systems" Proc AFIPS Vol 35, pp. 669–678, 1969 and A. Thomas et al. "Asynchronous Time Division Techniques: An Experimental Packet Network Integrating Video Communication" Proc International Switching Symposium, May 1984. ATDM is used in connection with continuous and bursty data traffic. ATDM uses channel identifiers with actual data to allow on-demand multiplexing of data from subscriber terminals with low channel utilization. The channel identifiers and associated data form time slots. However, ATDM is bit rate flexible since the appearance of packets can be asynchronous. Slot timing is obtained from a special synchronization pattern which is inserted into unused time slots. Since the synchronization pattern appears only in unused time slots, ATDM cannot be used to carry existing high speed hierarchical signals wherein the loading is close to one hundred percent.

In short, the situation is that the present public telephone network utilizes circuit transmission technology and the associated time division multiplexing transmission techniques, while future broadband services, the demand for which is presently uncertain, are best offered sing packet transmission technology. It is therefore an object of the invention to provide a transmission system which is capable of integrating present circuit traffic with future packet traffic so as to provide a flexible migration strategy from the existing copper wire based circuit network to succeeding generations of high bandwidth packet transmission networks. It is a further object of the invention to provide a set of multiplexers/-demultiplexers for use in a particular embodiment of a network utilizing the inventive transmission system.

SUMMARY OF THE INVENTION

The digital network transport system, referred to herein as Dynamic Time Division Multiplexing (DTDM), is a flexible network transport system capable of effectively handling both circuit and packet traffic. By combining conventional time division multiplexing techniques and packet transmission techniques, DTDM enables a flexible transition from the existing circuit type networks to future broadband packet transmission networks.

In a network utilizing DTDM, each transmission bit stream is divided into frames. These frames are the fundamental unit of data transport in DTDM. Each such frame comprises two fixed length fields: overhead and payload. The overhead field includes, for example, a frame alignment word for frame timing and the empty/full status of the frame. The payload field of each frame may be filled with a data packet including header or a slot from a circuit transmission stream. Before a slot from a circuit transmission stream can be inserted into the payload field of a DTDM frame, it must first be converted into a packet-like form with a header at its front. Viewed another way, each occupied DTDM frame comprises a transmission overhead field, a header field, and a data field. Thus, the DTDM transmission format is a combination of the circuit transmission format and the packet transmission format.

In the DTDM system, packet and circuit traffic can be multiplexed through the same multiplexer. Thus, such a multiplexer can have continuous circuit type tributaries and bursty packet tributaries. To multiplex such diverse traffic, a train of DTDM frames with empty payload fields is generated. This train has a bit

rate which defines a basic backbone transmission rate for the DTDM transmission system. Data in the form of packets or circuit slots with headers attached are inserted into the empty frames to form the DTDM bit stream.

An appropriate analogy is as follows. The stream of empty DTDM frames may be analogized to a train of empty freight cars. The empty freight cars are then filled with data from the various tributaries which may have been in circuit or packet format.

Illustratively, a DTDM multiplexer may be used to merge traffic from three different communications sources or tributaries into a single DTDM bit stream. These tributaries may be a digital phone generating 64 Kilobits/sec PCM voice, a graphics terminal sending bursty data at 1 Megabit/sec, and a circuit transmission stream operating at the DS3 rate of about 45 Megabits/-sec. Illustratively, the bit rate of the backbone DTDM bit stream is 150 Megabits which yields 144,000 frames per second given a 130-byte frame size. The available frames are shared by the three tributaries by giving higher priority to the circuit tributary, and allowing the voice and graphics tributaries to contend on a first-come, first-served basis. The circuit tributary seizes one out of every three empty frames passing by. Thus, the regularity of the circuit transmission will be maintained throughout the DTDM transmission link. Illustratively, the voice source is packetized by accumulating up to 15 milliseconds worth of voice samples before inserting this information into an empty DTDM frame along with a header. In this case the voice tributary will on average seize one out of every 2,160 frames. Similarly, at a rate of 1 Megabit per second, the graphics tributary will fill one frame out of 150. In this way, three diverse data streams are multiplexed into a single bit stream.

As a second example, DTDM can be used as a replacement transmission technology to carry existing inter-office traffic. More specifically, consider the need to multiplex and transmit three hierarchical signals at the DS1, DS2, and DS3 rates, respectively, for point-to-point transmission between two offices. The traditional TDM approach would utilize a step-by- step hierarchical approach to multiplex and to subsequently demultiplex these signals. The conventional hierarchical multiplexing scheme requires line conditioning and synchronization circuitry at each level of the hierarchy as well as hardware for bit interleaving.

In contrast, using a DTDM multiplexer, time slots from each of the three signals would be inserted into the empty frames in a basic DTDM backbone signal. If the backbone signal is 150 megabits per second and comprises 144,000 frames per second, the DS3 signal would require one out of every three DTDM frames, the DS2 signal would require approximately one out of every twenty-one DTDM frames and the DS1 signal would require approximately one out of every eighty-four of the empty DTDM frames.

In an actual network, tee above-described DTDM streams at the basic backbone bit rate generally contain empty frames; thus DTDM streams may be multiplexed into more densely populated DTDM bit streams at the same bit rate. These more densely populated basic backbone rate bit streams may then be multiplexed into higher bit rate streams for point-to-point inter-office transmission.

More particularly, a multiplexer for concentrating a plurality of relatively sparsely occupied DTDM bit streams into a more densely occupied bit stream of the same bit rate comprises a plurality of line buffers and a central server. The primary functions of the line buffers are recognition and queuing of incoming DTDM frames. Each line buffer contains a serial/parallel converter for converting incoming serial DTDM frames into parallel form and a first-in, first-out (FIFO) buffer with capacity for multiple frames. A timing and control circuit operates the line buffer and interfaces it with the central server.

The main functions of the central server are to look for newly arrived DTDM frames in the line buffers, to modify the header fields to include a line number, and to place the DTDM frames into a more densely occupied DTDM bit stream.

A DTDM demultiplexer may be used to separate a relatively densely occupied DTDM bit stream into a plurality of relatively sparsely occupied DTDM bit streams so that user data in the frames can ultimately be routed to desired locations.

The demultiplexer has one input line and a plurality of output lines. Each output line is connected to the input line by means of an associated interface. Each incoming DTDM frame in the more densely occupied DTDM bit stream is simultaneously received at each interface. The frame occupancy and line identification number are examined in each interface. If the frame is not empty and there is a line number match the packet contained therein is stored in a buffer. Otherwise the packet is discarded. Packets stored in the buffer are transmitted out of the interface unit in a less densely occupied DTDM bit stream.

BRIEF DESCRIPTION OF THE DRAWING

FIG. **1** schematically illustrates the DTDM transmission format;

FIG. **2**, schematically illustrates the formation of a backbone DTDM bit stream;

FIG. **3** schematically illustrates an end-to-end network using DTDM;

FIG. **4** illustrates an assembler for combining diverse tributary data streams into a single DTDM stream;

FIG. **5** illustrates a disassembler for separating a DTDM bit stream into diverse tributary data streams;

FIG. **6** illustrates a multiplexer for combining a plurality of DTDM bit streams into a single more densely occupied DTDM bit stream having the same bit rate, in accordance with an illustrative embodiment of the invention;

FIG. **7** illustrates an N:M multiplexer for combining a plurality of DTDM bit streams;

FIG. **8** illustrates how the input lines in the multiplexer of FIG. **7** are grouped;

FIG. **9** illustrates a demultiplexer for separating a densely occupied DTDM bit stream into a plurality of less densely occupied DTDM bit streams, in accordance with an illustrative embodiment of the invention;

FIG. **10** illustrates a multiplexer for point-to-point transmission;

FIG. **11** illustrates a demultiplexer for use in connection with point-to-point transmission;

FIG. **12** illustrates a framer circuit.

DETAILED DESCRIPTION OF THE INVENTION

1. DTDM Transmission Format

DTDM is an approach to data transport which can handle both TDM hierarchical signals and packet traffic in a common integrated structure, while allowing

complete bit rate flexibility. As illustrated in FIG. **1**, the transmission bit stream is divided into frames **1**. The DTDM frame is the fundamental unit of information transport in the DTDM transmission scheme. The frames come one after the other so as to form a continuous chain or train.

Each frame **1** comprises two fixed length fields designated transmission overhead (T) and payload in FIG. **1**. Illustratively, each frame comprises 130 bytes with 10 bytes being allocated to the transmission overhead field. Typically, the bit rate of the DTDM bit stream illustrated in FIG. **1** is about 150 Megabits/sec. The following information may be available in the overhead field of every DTDM frame; frame alignment word for frame timing, empty/full status of the frame, and span identification.

As shown in FIG. **1**, the payload field of each frame may be filled with a data packet including a header (H) or a slot from a circuit transmission stream. However, before a slot from a circuit transmission stream can be inserted into the payload field of a DTDM frame, it must first be converted to packet-like form by the insertion of a header (H) at its front. Viewed another way, each occupied DTDM frame comprises a transmission overhead field, a header field, and an information field. Thus, the DTDM transmission format is a combination of the circuit transmission format and the packet transmission format. The packet header provides information such as channel number, line number, error detection, etc. In general, only the information required in every frame gets permanent bandwidth allocation in the transmission overhead field.

FIG. **2** schematically illustrates the formation of a DTDM bit stream. The DTDM bit stream assembler **3** can combine into a single bit stream both continuous circuit tributaries and bursty packet tributaries. Three such tributaries are illustrated in FIG. **2**. They are: a digital phone tributary **5** generating 64 Kilobits/sec PCM voice, a tributary **7** from a graphics terminal sending bursty data at one megabit per second, and a circuit transmission stream **9** operating at the DS3 rate of about 45 Megabits/sec. Each of the three tributaries has a characteristic shading in FIG. **2** so that it is possible to follow how data from the three tributaries is combined to form the DTDM bit stream.

To multiplex such diverse traffic, a train **10** of DTDM frames with empty payload fields is generated. This train **10** has a bit rate which defines a basic backbone transmission rate for the DTDM system. Each of the frames in the train **10** has an occupied transmission overhead field (T).

Illustratively, the train of frames has bit rate of about 150 Megabits per second and comprises 144 K blocks/-sec. The assembler **3** serves to insert data from the tributaries **5,7,9** into tee payload fields of the DTDM frames in the stream **10**. To accomplish this, the tributaries **5, 7, 9** are first packetized using packetizers **11, 13, 15**, respectively to form the packetized streams **17, 19, 21**. Each packet comprises a header (H) and an information field. In the case of the tributary **5**, up to 15 milliseconds of speech samples are accumulated to form a packet. In the case of the circuit tributary each slot is converted to packet form by placing a header at the front thereof.

To form the DTDM stream **10**, the packets comprising the streams **17, 19, 21** are inserted into the empty payload fields of the empty frames in the stream **10**. The empty frames are shared by the three tributaries by giving higher priority to the circuit tributary **9** and allowing the voice and graphics tributaries **5, 7** to contend for empty frames on a first-come, first-served basis. Thus, the circuit tributary seizes one out of every three frames so that the regularity of the circuit transmission is maintained throughout the DTDM transmission link. Similarly, the voice tributary will seize one out of every 2,160 frames and the graphics tributary will seize on average one out of every 150 frames. It should be noted that the bit stream 12 is not 100% occupied and that some frames remain empty. In this way, three diverse tributaries are multiplexed into a single DTDM bit stream.

.2 A Network Utilizing DTDM

FIG. **3** schematically illustrates an end-to-end network **20** utilizing DTDM. The network **20** connects to customer premises equipment (CPE) **22**, of which three types are illustrated, namely video, voice and data.

In the network **20**, three multiplexing stages are required to support end-to-end transport. In the user-network interface stage **30**, an assembler **32** receives data streams on lines **21** from the customer premises equipment **22** and combines these streams into a basic backbone DTDM stream of the type discussed in connection with FIGS. **1** and **2**. Similarly, disassembler **34** tears apart a basic DTDM bit stream arriving on line **33** and distributes the data to the appropriate customer premises equipment **2** via lines **23**.

As indicated above, the DTDM bit stream formed by the assembler **32** is not 100% occupied. Thus the multiplexer **36** in the remote electronics stage **38** is used to combine several DTDM bit streams arriving on lines **62** into a more densely occupied DTDM bit stream of the same bit rate to achieve greater transmission efficiency. Similarly, the demultiplexer **39** separates a densely populated DTDM bit stream arriving on line **120** into less densely populated DTDM bit streams transmitted via lines **33**, so that the data contained therein can ultimately be routed to the correct customer premises equipment.

In the point-to-point stage **40**, a plurality of DTDM bit streams arriving via lines **63, 150** are time division multiplexed by means of time division multiplexer **42** for high speed point-to- point transmission via line **165** to a network switch (not shown). For example, the multiplexer **42** receives one DTDM stream via a line **63** from multiplexer **36** and another DTDM stream via line **150**. The DTDM bit stream transmitted via line **150** is formed by DTDM assembler **48** and contains the data of three DS3 tributaries **45**.

Time division demultiplexer **44** receives a high speed bit stream from a switch (not shown) via line **170** and demultiplexes this stream into a plurality of DTDM streams. One DTDM stream containing data for customer premises equipment goes to demultiplexer **39** via line **120** and another DTDM stream comprising DS3 slots goes to disassembler **47** via line **179**.

3. DTDM Assembler and Disassembler

The function of the DTDM bit stream assembler **32** of FIG. **3** is to packetize each incoming data stream associated with one particular customer service or transmission channel and then embed these packets into the basic DTDM transmission frames. The assembler **32** is shown in greater detail in FIG. **4**.

The assembler **32** comprises a plurality of interface units **50**. Each interface unit **50** serves to interface an associated data input **21** with the DTDM bit stream. A DTDM bit stream comprising empty frames with empty payload fields is generated by framer unit **52**. A

detailed description of the framer unit is provided below.

Each interface unit includes a framer unit **53**. The framer units **52**, **53** are connected together in a daisy chain fashion. The frames comprising the DTDM bit stream are passed along the daisy chain from one framer unit to the next. More particularly, the DTDM bit stream leaves the serial data output (sdo) of the framer unit **52** and enters the serial data input (sdi) of the topmost framer unit **53**. The DTDM bit stream leaves the topmost framer **53** via its serial data output (sdo). The DTDM bit stream then enters the serial data input (sdi) of each succeeding framer unit and leaves via the serial data output (sdo) of each framer unit. The DTDM bit stream leaves the serial data output of the lowermost framer via line **62**. As shown in FIG. **3**, line **62** serves to transmit the DTDM bit stream to the DTDM multiplexer **36**. If the DTDM frame currently located at the framer unit **53** of a particular interface **50** is empty, that interface may insert a packet into the payload field of the DTDM frame.

The data inputs **21** to the assembler **32** are connected to the customer premises equipment **22** of FIG. **3** and may have a wide range of bit rates; for example, the data inputs **21** can be video, voice, data, or different digital hierarchical transmission signals (DS-**1**, DS-**2** and DS**3**). Therefore, the assembler architecture must be capable of efficiently accommodating different input bit rates and be flexible enough to allow for future expansion or for the changing of particular input connections to different services. The architecture shown in FIG. **3** provides the capability to early add or drop a particular input service.

Each input **21** is connected to a packetizer **55** which forms part of the associated interface unit **50**. The packetizer **55** puts the incoming data into a packet structure by adding a packet header at the beginning of appropriate segments of the input bit stream. The packet header carries information about the packet, such as packet occupancy, channel identification number, line identification number, check sum and so on. Illustratively, the channel identification number is used to identify the input service from which the packet originated. After the data is put into a packet structure, it is stored in a FIFO **57** with byte wide format. The framer unit **53** then reads the data from the FIFO **57** into its parallel data input (pdi) **58** and generates properly framed data bits which are inserted into an empty payload field of a DTDM frame currently at the particular framer unit **53**.

However, a framer unit **53** will not read the data from the FIFO **57** unless two conditions are met. One is that the "packet-ready" pulse signal from the packetizer **55** is asserted, indicating one packet is completely stored in the FIFO. The other condition is that the incoming DTDM frame on the serial data input (sdi) of the framer **53** is not already occupied by a valid packet, i.e. the incoming DTDM frame is empty. Thus, an empty or "emp" signal is transmitted from the framer **53**. The "packet-ready" signal triggers an enable signal, "en", in the framer unit to be asserted for the whole frame transmission period allowing the data packet to be moved from the FIFO **57** through the framer **53** and into the DTDM bit stream. Using the "emp" and "en" signals, control logic **59** controls the reading of a packet out of the FIFO **57** and into the framer **53**.

Since the framer units **53** are daisy-chained together, the contention for empty DTDM frames is automatically resolved in favor of input services having positions closer to the empty frame generator.

In order to simplify the assembler **32** of FIGS. **3** and **4** and hence reduce the building cost, one practical assumption may be utilized; the total traffic of all inputs at any given time is less than the bit rate of the basic backbone DTDM stream.

The topmost framer **52** in FIG. **4** does not have any input service connected to it. It generates the chain of empty DTDM frames which are sent to the following framers **53**. If none of the interfaces **50** insert a packet into particular frame, an empty frame is finally sent out through the serial data output (sdo) of the bottom-most framer unit on lead **62**.

After the DTDM bit stream has traveled through the entire communications network **20** of FIG. **3**, which network includes multiplexers, switches, and demultiplexers, etc., the DTDM bit stream is disassembled and the data distributed to the appropriate customer services equipment. In the network **20** of FIG. **3**, the disassembler **34** is used for this purpose. The disassembler **34** is shown in greater detail in FIG. **5**. Illustratively, the disassembler **34** removes both the transmission overhead and packet header field from each incoming DTDM frame and distributes the data contained in the frame to the desired customer premises device.

More particularly, the assembler **34** comprises a plurality of interfaces **66**. Each interface **66** receives the incoming TTDM bit stream via line **33** (see FIG. **3**) and is illustratively connected to one customer premises device via an output lines **23** (see FIG. **3**). Each incoming DTDM frame is simultaneously received by the framer unit **70** in each interface **66**. However, only packets containing data to be transmitted to the associated customer premises equipment are transferred from the framer **70** to the associated FIFO **72**. To accomplish this, the packet occupancy and channel identification number are examined by the framer **70**. The framer **70** in turn generates proper control signals via lines **73**, which, along with control logic **74**, determine whether or not the packet carried in the payload field of the particular DTDM frame will be written into the FIFO **72** of the particular interface unit so that the data contained in the packet can be transmitted to the associated customer premises equipment.

Recovering the correct frequency from the incoming data is a very challenging task. Although for each kind of customer premises equipment or service the frequency is known, the difference between the local reading clock used to read data out of the FIFO **72** and the clock which was used to load data into the empty frames at the transmit end may result in overflow or underflow of the FIFO **72**. Illustratively, a phase locked loop **78** is used to modify the local reading clock in order to cancel this difference in clock rates.

As shown in FIG. **5**, the local reading clock signal (line **73***a*) used to read data out of the FIFO **72** is phase locked with the incoming data so that the data can be read out correctly from the FIFO **72** without overreading or underreading. The rate at which data is read out of the FIFO is determined by the frequency of the voltage controlled oscillator **76** in the phase locked loop **78**.

The packet is written into the FIFO **72** with the network clock rate, but read out at a rate dependent on the particular equipment to which the data is transmitted. An "hf" signal which indicates that the FIFO **72** is half full is smoothed out by a low-pass filter **75** whose output is used to control the output frequency of a voltage-con-

trolled oscillator **76**. If information is read out of the FIFO **72** faster than information is written into the FIFO **72**, then the "hf" signal will not be asserted. This causes the voltage output from the low-pass filter **75** to decrease, reducing the output frequency produced by the voltage controlled oscillator and reducing the rate at which data is read out of the FIFO **72**. Similarly, if information is read out of the FIFO more slowly than it is being written into the FIFO **72**, the "hf" signal will be asserted and the voltage controlled oscillator frequency will be increased so that the read clock signal frequency is larger. The same interface unit **66** ca be used for different customer premises devices by choosing a proper frequency for oscillator **69**.

Data packets read out of the FIFO units **72** are depacketized by means of depacketizer circuits **79** which serve to remove the headers. The resulting data is then transmitted via lines **23** to the appropriate customer premises equipment.

4. DTDM Bit Stream Multiplexer and Demultiplexer

The function of the DTDM bit stream multiplexer **36** of FIG. **3** is to concentrate a plurality of relatively sparsely occupied incoming DTDM streams into at least one more densely occupied DTDM stream of the same bit rate, resulting in more efficient use of the transmission facility. There is more than one architecture for implementing the DTDM multiplexer **36** of FIG. **3**.

One embodiment of such a DTDM bit stream multiplexer is illustrated in FIG. **6**. The DTDM multiplexer **36** of FIG. **6** comprises N input lines **62** (see FIG. **3**) and one output line **63** (see FIG. **3**). Line buffers **64** recognize and queue incoming DTDM frames. The server **65** looks for newly arrived DTDM frames in the line buffers **64**, adds a proper line number in the header field, and sends the frames out in a more densely occupied DTDM bit stream.

The primary functions of the line buffers **64** are recognition and queuing of incoming DTDM frames. Each line buffer contains a serial/parallel converter **66** for converting incoming serial DTDM frames into parallel form and a first-in, first-out buffer **67** with capacity for multiple frames. A timing and control circuit **68** operates the line buffer and interfaces it with the server.

The main functions of the server **65** are to look for newly arrived DTDM frames in the line buffers, to modify the header field to include a line number, and to place the DTDM frame in a more densely occupied DTDM bit stream. The server comprises a header insert circuit **69** for modifying the header field of the DTDM frames, a controller circuit **70** for interfacing with the line buffers **64**, and a parallel to serial converter **70**. The operations of the server are pipelined; while the server reads a DTDM frame from a line buffer and places it in an outgoing DTDM stream, it continues searching line buffers for DTDM frames. It should be noted that the multiplexer of FIG. **6** is useful for multiplexing packets in non-DTDM transmission formats in addition to being useful for DTDM bit streams.

Another possible architecture for a multiplexer capable of combining several relatively sparsely occupied DTDM bit streams into a more densely occupied DTDM bit stream of the same bit rate builds on the architecture of the DTDM bit stream assembler **32** of FIG. **4**. Each input to an interface unit **50** of FIG. **4** is replaced by a serial data link on which a DTDM bit stream arrives. The data packets contained in the frames comprising the incoming DTDM bit stream contend for output frames in an outgoing DTDM bit stream. The frames comprising the outgoing DTDM bit streams are generated by the framer **52** and passed along the chain of interconnected framers **53**. The interface units **50** insert data packets from incoming DTDM frames into the frames of the outgoing bit stream to form a more densely occupied DTDM bit stream. The contention for output frames is resolved automatically by the daisy-chained connection of the framer units. Note that no packetizer is needed in the interface units, and the length of each FIFO is preferably more than two frames to prevent data packets contained in incoming frames from being lost.

FIG. **7** schematically illustrates an alternative DTDM bit stream multiplexer for combining a plurality of relatively sparsely occupied DTDM bit streams into a smaller number of more densely populated DTD bit streams of the same bit rate. The multiplexer **36'** of FIG. **7** has the flexibility to receive N input DTDM bit streams and to transmit M output DTDM bit streams, which allows M output lines to be shared by N input lines. It is known that both the probability of buffer overflow and the average delay for bursty traffic can be significantly decreased by increasing the number of outputs.

Using the multiplexer architecture **36** shown in FIG. **6**, it is difficult to build an N:M multiplexer, because the service order is determined by a single central server. However, it is possible to provide a multiplexer system comprising M separate multiplexers of the type shown in FIG. **6**, each having N/M input lines and line buffers and one server and associated output line. In contrast, the service order in the multiplexer **36'** of FIG. **7** is determined locally, which results in the flexibility of reassigning input lines to different output lines based on the input traffic statistic.

The N:M multiplexer **36'** of FIG. **7** comprises a plurality of input lines **62** (see FIG. **3**) and a smaller number of output lines **63** (see FIG. **3**). DTDM frames arriving on the input lines **62** are converted into a byte wide stream by means of the serial-to- parallel converters **86** and stored in the associated buffers (FIFOs) **88**. The operation of the framer units **90, 92** is similar to those in the DTDM bit stream assembler of FIG. **3**. Each framer **90, 92** has a parallel data input (pdi), a serial data input (sdi) and a serial data output (sdo). Framer **90**, the head-end framer unit, doesn't have any input lines connected to it. In normal operation, it continuously sends out a chain of empty frames. The remaining framers **92** take data comprising occupied DTDM frames in the buffers **88**, and insert this data into the empty frames generated by the framer **90**, so as to combine a plurality of sparsely occupied DTDM bit streams into a smaller number of more densely populated DTDM bit streams.

The N:M multiplexer **36'** of FIG. **7** comprises an $(N+M) \times (N+M)$ broadcasting cross point switch network **95**. The serial data output (sdo) of each framer **90, 92** is connected to an input of the switch, and the serial data input (sdi) of each framer **92** is connected to an output of the switch as shown in FIG. **7**. The connections through the switch network are controlled by a dedicated controller **97**.

Illustratively, when the system is initialized, the N input lines **62** are divided into M groups, (1,2 .., J), (J+1, J+2, .., 2J), ..., (MJ+1, ..., (M+1)J), where J=N mod M. The J input lines in each group are logically connected as shown in FIG. **8**. Each group of input lines is associated with one output line. Thus, all of the DTDM frames arriving at the inputs of one group are

merged into a single DTDM bit stream which leaves via the associated output. The topmost framer unit **92** in each group receives empty frames broadcast from the framer **90**. Each frame is then passed through the switch **95** from one framer in the group to the next framer in the group. If a particular FIFO **88** has data comprising a DTDM frame and the associated framer **92** receives an empty frame, the data is inserted into the empty frame. Thus, within each group service priority is ranked in descending order with the higher priorities near the top. Ultimately, M relatively densely occupied DTDM bit streams leave the multiplexer of FIG. via the outputs **63**.

Thus, with the addition of the cross point switch, more than one framer **92** receives empty frames from the framer **90** at the same time. This achieves the N:M multiplexing function automatically and with minimal complexity.

If the input lines are not grouped so as to distribute output traffic evenly, the input lines can be regrouped easily by changing the connections within the switching network **95**. For example, a particular input in the first group of inputs may be assigned to any other group, e.g., the second group of inputs, to spread out traffic evenly. The controller **97** must know the traffic statistics of each input line and follow some algorithm to rearrange the inputs and decide the ordering (priority) within each group.

The DTDM multiplexer of FIG. 7 may route DTDM frames arriving on the same input line to different output lines. For example, n frames arriving on an input line have been sent to output #1. But the (n+1)th frame may be switched to output #2 because reconfiguration took place to balance traffic among the output lines. This may cause an out of sequence problem if the (n+1)th frame arrives at the receive end before the nth frame does. The cost to reorder the frame sequence at the output end may be high. Illustratively, to avoid this problem, one rule may be followed: the input lines carrying services with high bit rate information, such as video, will not be switched from one input line group to another during the service period. For a low bit rate service, such as voice at 64 Kb/s, even if two consecutive frames containing data are dispatched onto two different output lines, the two frames from such a bursty service will be separated by more than several hundred frame intervals. Hence, it is unlikely for there to be an out of sequence problem in this case.

It should be noted that multiplexer architecture of FIG. 7 may be used to multiplex other types of traffic besides DTDM traffic. For example, streams of data packets may be multiplexed together to form more densely occupied streams.

Turning now to FIG. 9, the DTDM bit stream demultiplexer **39** of FIG. 3 is illustrated in greater detail. The function of the DTDM bit stream demultiplexer **39** is to separate a relatively densely occupied incoming DTDM bit stream into a plurality of relatively sparsely occupied outgoing DTDM bit streams of the same bit rate so that the user data in the frames can ultimately be transported to the proper customer premises devices.

The demultiplexer **39** of FIG. 9 has one input line **120** (see FIG. 3) and a plurality of output lines **33** (see FIG. 3). Each output line **33** is connected to the input line **120** by means of an associated interface **124**. Any incoming DTDM frame is simultaneously received by the framer unit **126** in each interface **124**. The frame occupancy and line identification number of each incoming DTDM frame are examined by the framers **126**. If the frame is not empty and the line number is matched, the packet contained therein will be written into the FIFO **130** under the control of logic **128** and then read out of the FIFO **130** by the framer **132** at the output end of the interface **124** under the control of logic **134**. Otherwise, the packet is simply discarded. In this manner, the data from each incoming frame is routed to the correct output line. A counter **136** in each interface is used to count the number of bytes written into the FIFO **130** and generates a signal when a full packet is stored in the FIFO. This signal will inform the output framer **132** to start reading the packet in the FIFO. The framer **132** will assert the "en" signal during the reading of the entire packet. The framers **132** generate sequences of DTDM frames. These sequences of frames leave the framers **132** via the serial data outputs and form the outgoing DTDM bit streams on the lines **33**. When data packets are present in the FIFOs **130** they are inserted into the frames generated by the framers **132**. In particular embodiments of the demultiplexer, the functions of the framer units **126, 132** may be performed by a single framer unit.

5. Time Division MUX/DEMUX for DTDM Bit Stream

After relatively sparse DTDM bit streams are concentrated into more densely populated DTDM bit streams of the same bit rate using for example, the DTDM multiplexer **36** of FIG. **3**, a plurality of such more densely populated bit streams may be time division multiplexed into a higher speed data stream using, for example, the time division multiplexer **42** of FIG. **3**. Such high speed data channels may be used for communications to and from central offices.

Usually, the most challenging work in a time division multiplexing system is to synchronize all incoming bit streams so that they have a common bit rate before they are interleaved into a higher bit rate stream. Typically, the input bit streams have the same nominal center frequency but drift independently a small amount from the center frequency. The conventional way to overcome the asynchronization among the input bit streams is positive bit or byte stuffing. The frequency of the high speed output bit stream is made greater than the product of the nominal center frequency and the number of input tributaries. There is usually a bit or byte position reserved for the occasional stuffing of a dummy bit or byte. Also, there is some control overhead used to indicate if the bit or byte at the stuffing position is valid.

By taking advantage of the fact that the frames comprising each input DTDM bit streams are not **100%** occupied, the frequency of the higher speed output bit stream can be made exactly equal to the nominal center frequency of the input tributaries times the number of the input tributaries. In the case of a DTDM system, this can be accomplished through the positive and negative stuffing of DTDM frames. Since the frequency of each input tributary signal can be adjusted in the positive or negative direction through the insertion or removal of an empty DTDM frame, it is possible to make the frequency of the high- speed multiplexed bit stream exactly an integer multiple of the nominal input tributary frequency.

A time division multiplexer **42** (see FIG. **3**) for multiplexing a plurality of DTDM bit streams is illustrated in FIG. **10**. Each input **63, 150** (see FIG. **3**) is connected to an interface unit **152**. Each interface unit **152** comprises a framer **154** which is clocked by a clock signal derived

from a clock recovery circuit **156**. The derived clock, which is the actual frequency of the tributary, may differ slightly from the nominal tributary frequency as discussed above. This difference between the nominal and actual frequencies is eliminated in the interface unit. Each incoming DTDM frame will be examined by the framer **154** in the associated interface **152** for its occupancy. The data packets contained in the occupied frame will be written into the FIFO **158** under the control of logic **159** and read out later by the framer **160** at the output end of the interface unit **152**. Empty frames will be discarded.

The reading of the data packets from the FIFOs **158** to the parallel data inputs (pdi's) of the framers **160** is synchronized. The serial data input (sdi) of each framer **160** is connected to the serial data output of a framer **162**. The framer **162** serves to broadcast empty frames to the framers **160** so that each framer **160** receives a synchronous chain of empty frames at the nominal tributary frequency. The empty frames received by each framer unit **160** are filled with data packets from the associated FIFO **158** to produce synchronized tributary bit streams at the nominal tributary frequency.

If the actual frequency of a particular tributary is less than the nominal center frequency then on occasion, the associated FIFO **158** will not have a packet to insert into an empty DTDM FRAME. The net effect is that an empty DTDM frame is added so that the tributary acquires a frequency equal to the nominal frequency. However, if the actual frequency of the tributary is larger than the nominal center frequency the net effect is that empty DTDM frames are dropped so that the tributary acquires a frequency equal to the nominal frequency. Illustratively, the difference between the actual and nominal tributary frequencies is on the order of ten parts per million. In this case, a two frame capacity FIFO **158** is sufficient as long as each input tributary has one empty frame in **105**.

All of the framers **160** send out frames at the same time, with frame alignment being automatically achieved. The aligned frames are then bit interleaved using bit interleaving circuit **164** to produce a single high bit rate bit stream at output **165** (see FIG. **3**). Note that the clocks of the framers **160** are connected together so that data bits coming from the framers **160** are phase aligned and can be bit interleaved directly. The clock for the framers **160** is provided by the clock generator **166** and frequency divider **167**. In an alternative embodiment of a time division multiplexer, instead of bit interleaving, frame or byte interleaving may also be used. If the frame interleaving is used then the multiplexed output bitstream has the same DTDM frame structure, thereby allowing the flexible single transport architecture to grow as the technology advances.

A time division demultiplexer **44** (see FIG. **3**) for demultiplexing the high speed bit stream is illustrated in FIG. The high speed data stream arrives on input line **170** (see FIG. **3**) and is bit deinterleaved by means of bit deinterleave circuitry **172** into several lower speed tributary bit streams which are transmitted outward on lines **174**. In order to dispatch the bits to correct tributaries, a predetermined span identification (SP ID) is inserted for each tributary before they are multiplexed at the transmit side. The tributary present on line **174***a* is connected to a framer unit **176**, which will detect the frame boundary and determine by examining the span identification whether or not the bit deinterleave circuitry has correctly aligned the incoming bit stream so that appropriate data goes to appropriate output tributaries. If not, either a skip pulse is generated to rotate the bit sequence or a signal is generated by the framer **176** and sent to a cross point switch **178** to reassign the order of the bit stream. The bit streams with correct bit assignments appear at outputs **120**, **179** (see FIG. **3**). Alternatively, instead of the crosspoint switch **178**, a barrel shifter may be used. It should be noted that the clock for the bit deinterleave circuit **171** and framer **176** is provided by clock recovery circuit **180** and frequency divider **182**. Demultiplexers which operate according to similar principles are disclosed in R. J. Boehm et al. "Standardized Fiber Optic Transmission Systems—A Synchronous Optical Network View" IEEE Journal on Selected Areas in Communications VOL SAC-4 No. 9 pp 1424–1431 Dec. 1986 and L. R. Linnell "A Wideband Local Access System using Emerging- technology Components" IEEE Journal on Selected Areas in Communications VOL SAC-4 No. 4 pp 612–618 July 1986.

6. The Framer Circuit

The framer unit is an important component for the implementation of specific embodiments of the assemblers, disassemblers, multiplexers and demultiplexers which comprise the DTDM network discussed above.

The framer unit performs a number of functions in the DTDM network, including generating trains of empty DTDM frames, enabling the writing of data packets into specific DTDM frames, and the examination of header data in specific DTDM frames to generate signals for the control of peripheral circuits (e.g. in a DTDM demultiplexer to determine if data in a particular DTDM frame belongs to particular customer premises equipment or a particular less densely occupied DTDM bit stream). All of these functions may be carried out by the framer unit discussed below.

A framer unit **200** is schematically illustrated in FIG **12**. Illustratively, the framer unit **200** is formed as a single chip. The framer unit **200** has a serial data input **202**, a parallel data input **204**, a serial data output **206** and a parallel data output **208**. Timing information for the framer unit **200** is provided by timing generator **209**. The framer **200** operates under control of a control unit **210** which illustratively comprises one or more finite state machines.

As indicated above, a plurality of framer units may be connected in a daisy chain fashion and DTDM frames may be passed from one framer to the next (see e.g., framers **53** of FIG. **4**). Data may be written into an empty DTDM frame as follows. A DTDM frame is received at the serial input **222**. The DTDM frame is converted to parallel form by serial-to-parallel converter **212** and is detected by frame detector **214**. The frame detector **214** is in communication with the control **210** and illustratively communicates to the control **210** information such as whether or not the frame is empty. Illustratively, the DTDM frame leaves the framer unit via the serial output **206** after conversion to serial form by way of parallel-to-serial converter **216**. However the frame cannot reach the parallel-to-serial converter **216** unless the control **210** applies a signal to the tristate device **218**.

The data to be written into the frame is received at the parallel data input **204** (illustratively from a FIFO **57** in the DTDM bit stream assembler **32** of FIG. **4**). If the particular DTDM frame is empty and data is available at the parallel input **204**, a signal is applied by the control **210** to the tristate device **220** to enable the data to be inserted into the particular DTDM frame via bus

219 before it leaves the framer unit. However, if the DTDM frame is already full the control does not provide such a signal to the tristate 220. In particular framer units additional information such as span identification may be inserted into specific DTDM frames by means of an additional tristate unit not shown.

The framer unit 200 may also be utilized to generate a chain of empty DTDM packets (see e.g., framer 52 in FIG. 4). In this case the serial input 202 and associated serial-to-parallel converter 212 are not utilized. Instead, the control 210 applies a periodic signal to tristate 222 so that a frame alignment word is periodically read from frame byte ROM 224 and transmitted via bus 219 to parallel-to-serial converter 216 and serial output 206 so as to define a train of empty DTDM frames. Other information comprising the transmission overhead (T) field of the DTDM frame may also be stored in ROM 224 or provided by other sources connected to the bus 219 via a tristate device operative under the control of the control unit 219.

In particular situations (see e.g., framers 70 of FIG. 5 and 126 of FIG. 9), a framer unit receives occupied DTDM frames and the header (H) or transmission overhead (T) fields have to be examined to control peripheral circuit operations such as the reading of data into a FIFO. In this case, a multiple byte delay unit 230 may be included in the path between the serial input 202 and the parallel and serial outputs 208, 206. Typically a frame arrives at the serial input 202 and is converted to parallel form by the serial-to-parallel converter 212. The frame detector detects the frame and supplies necessary information from the header or transmission overhead fields to the control unit 210 which issues appropriate control signals via lines 232 such as user read/write strobes. Illustratively, the user read/write strobes control the writing of data from DTDM frames in the framer unit into associated FIFOs or other buffers. If the FIFO has byte wide format, the parallel output 206 may be used for this purpose. The delay unit 230 is used to insure that the necessary signal processing takes place before the DTDM frame leaves the framer unit.

7. **Conclusion**

A multiplexer for combining a plurality of relatively sparsely occupied DTDM bit streams into a more densely occupied bit stream of the same bit rate has been disclosed.

Finally, the above described embodiments of the invention are intended to be illustrative only. Numerous alternative embodiments may be devised by those skilled in the art without departing from the spirit and scope of the following claims.

What is claimed is:

1. A multiplexer for multiplexing a plurality of input DTDM bit streams of a particular bit rate into an output DTDM bit stream more densely occupied than said input DTDM bit stream and having said bit rate, said multiplexer comprising:

a plurality of line buffers, each of said line buffers being adapted for recognizing and queing incoming DTDM frames from one of said input DTDM bit streams, and

a central server adapted for detecting newly arrived DTDM frames in said line buffers and for inserting data comprising said newly arrived DTDM frames into said output bit stream,

wherein each of said line buffers comprises:

a serial-to-parallel converter for converting incoming frames from serial to parallel form,

a first-in, first-out buffer with multiple frame capacity for storing data comprising said incoming frames, and

a timing and control circuit for interfacing the line buffer with said central server, and

wherein said data stored in said first-in, first-out buffers includes header fields and wherein said central server comprises

a header insert circuit for modifying said header fields to include a line number, and

a parallel-to-serial converter for reading out DTDM frames in serial form.

2. A demultiplexer for demultiplexing an input packetized bit stream having a particular bit rate into a plurality of output packetized bit streams having said bit rate and being less densely occupied than said input bit stream, said demultiplexer comprising:

an input line on which said input bit stream arrives,

a plurality of output lines on which said output bit streams leave, and

a plurality of interface units, each of said interface units interfacing said input line with one of said output lines, each of said interface units comprising:

means for receiving each packet arriving on said input line and for examining a line member contained therein,

means for storing arriving packets whose line number matches a predetermined line number, and

means for inserting a packet stored n said storage means into the output bit stream leaving the interface.

3. The demultiplexer of claim 2 wherein said bit streams are DTDM bit streams comprising frames containing packet..

4. A multiplexer comprising

a plurality of input lines, each of said input lines receiving an input data stream organized into frames, a fraction of said frames being occupied by data packets, all of said input data streams having the same bit rate,

queuing means associated with each of said input lines for queuing packets from one of said input data streams, and

a central server for detecting newly arrived packets from said input data streams in said queuing means and for inserting said newly arrived packets into an output data stream organized into frames, said output data stream having the same bit rate as said input data streams and a larger fraction of frames occupied with packets than any of said input data streams.

5. The multiplexer of claim 4 wherein said input data streams and said output data stream are DTDM streams.

* * * * *

65