EXHIBIT 1

United States Patent [19]

Chao et al.

[11] **Patent Number: 4,833,673**

[45] **Date of Patent: May 23, 1989**

[54] **TIME DIVISION MULTIPLEXER FOR DTDM BIT STREAMS**

[75] Inventors: **Hung-Hsiang J. Chao**, Madison; **Sang H. Lee**, Bridgewater, both of N.J.

[73] Assignee: **Bell Communications Research, Inc.**, Livingston, N.J.

[21] Appl. No.: **118,978**

[22] Filed: **Nov. 10, 1987**

[51] **Int. Cl.**[4] **H04J 3/22**; H04J 3/24

[52] **U.S. Cl.** **370/94**; 370/110.1; 370/102

[58] **Field of Search** 370/94, 84, 102, 112, 370/80, 110.1

[56] **References Cited**

U.S. PATENT DOCUMENTS

4,558,445	12/1985	Novick	370/102
4,698,801	10/1987	Hatano et al.	370/84
4,750,172	6/1988	Hornung et al.	370/102

OTHER PUBLICATIONS

R. W. Muise, et al., "Experiments in Wideband Packet Technology", Proc 1986 International Zurich Seminar on Digital Communications, pp. 136–138.

W. W. Chu, "A Study of Asynchronous Time Division Multiplexing for Time Sharing Computer Systems", Proc ARIPS, vol. 35, pp. 669–678, 1969.

A. Thomas, et al., "Asynchronous Time Division Techniques: An Experimental Packet Network Integrating Video Communication", Proc International Switching Symposium, May 1984.

Primary Examiner—Douglas W. Olms

Assistant Examiner—Min Jung

Attorney, Agent, or Firm—James W. Falk

[57] **ABSTRACT**

A multiplexer for time division multiplexing a plurality of DTDM bit streams is disclosed. By taking advantage of the fact that the frames comprising each DTDM bit stream are not 100% occupied, the frequency of the higher speed output bit stream can be made equal to the product of the nominal center frequency of the input tributaries and the number of input tributaries. This is accomplished through the positive and negative stuffing of DTDM frames.

8 Claims, 10 Drawing Sheets

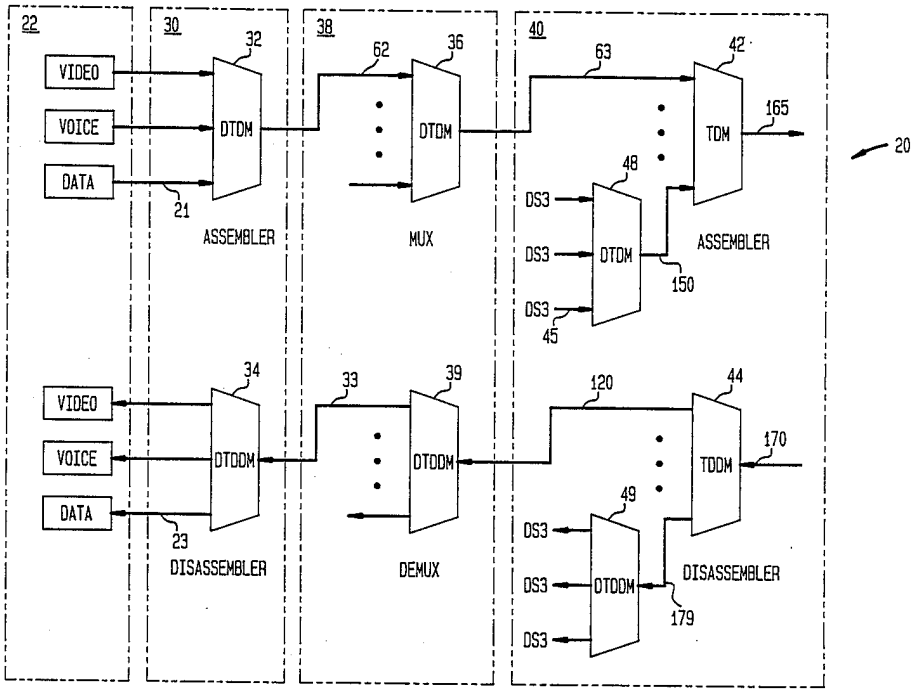

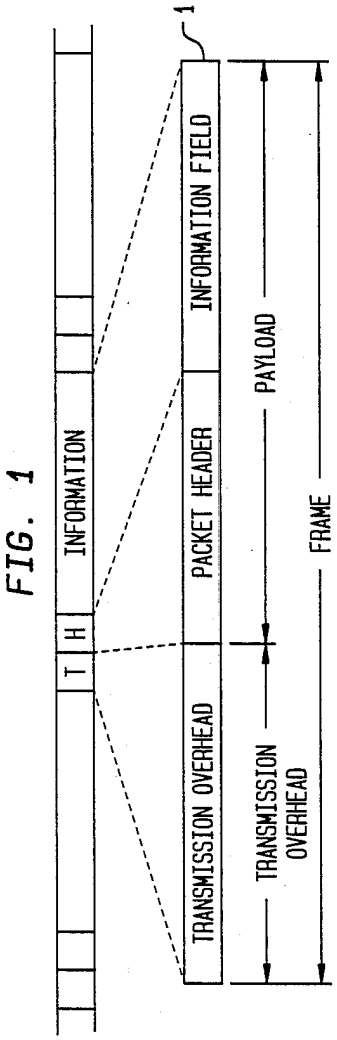
1
INFORMATION FIELD
PACKET HEADER
TRANSMISSION OVERHEAD
INFORMATION
T
H
PAYLOAD
TRANSMISSION OVERHEAD
FRAME

FIG. 1

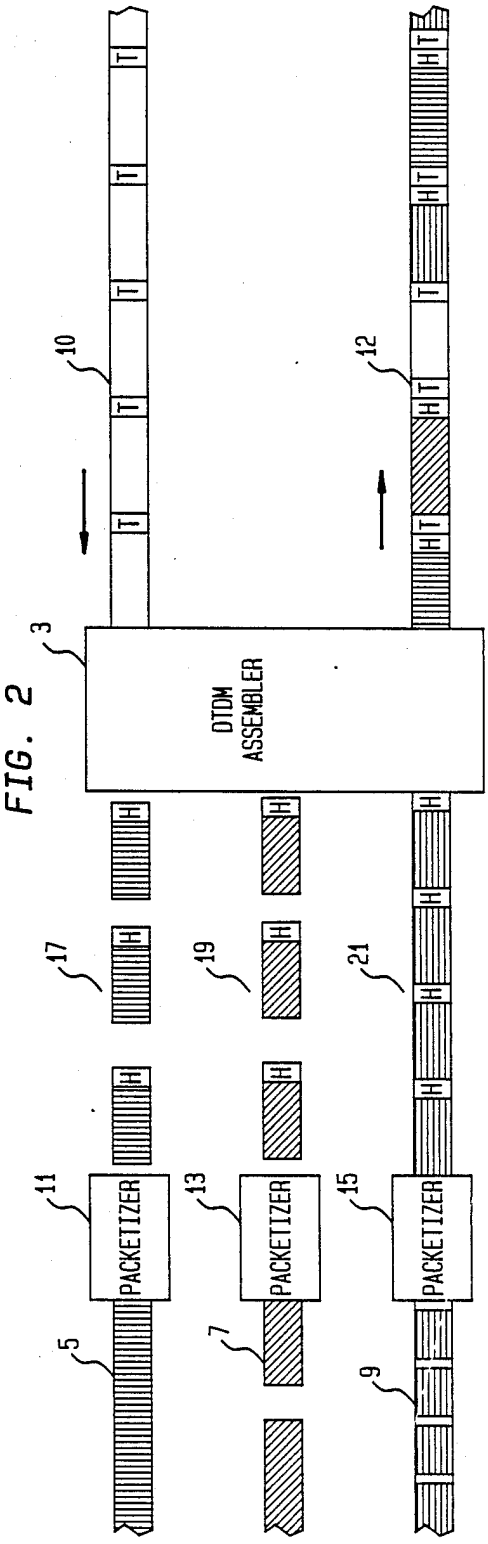
10
12
3
DTDM ASSEMBLER
17
19
21
11
13
15
PACKETIZER
PACKETIZER
PACKETIZER
5
7
9
T
H

FIG. 2

FIG. 3

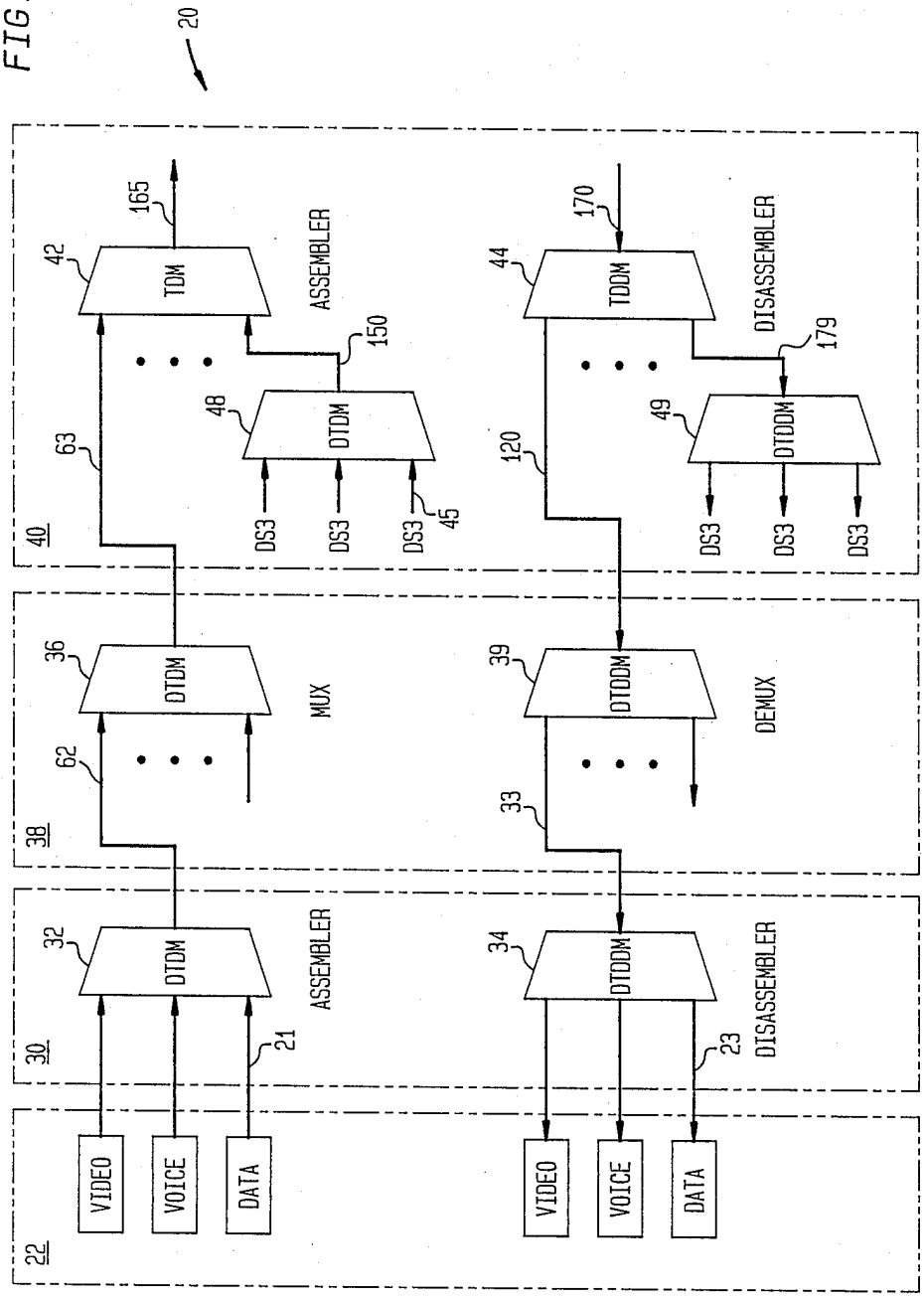
20
165
42
TDM
ASSEMBLER
150
48
DTDM
63
40
DS3
DS3
DS3
45
170
44
TDM
DISASSEMBLER
179
49
DTDM
120
DS3
DS3
DS3
36
DTDM
MUX
62
38
39
DTDM
DEMUX
33
32
DTDM
ASSEMBLER
30
21
34
DTDM
DISASSEMBLER
23
VIDEO
VOICE
DATA
22
VIDEO
VOICE
DATA

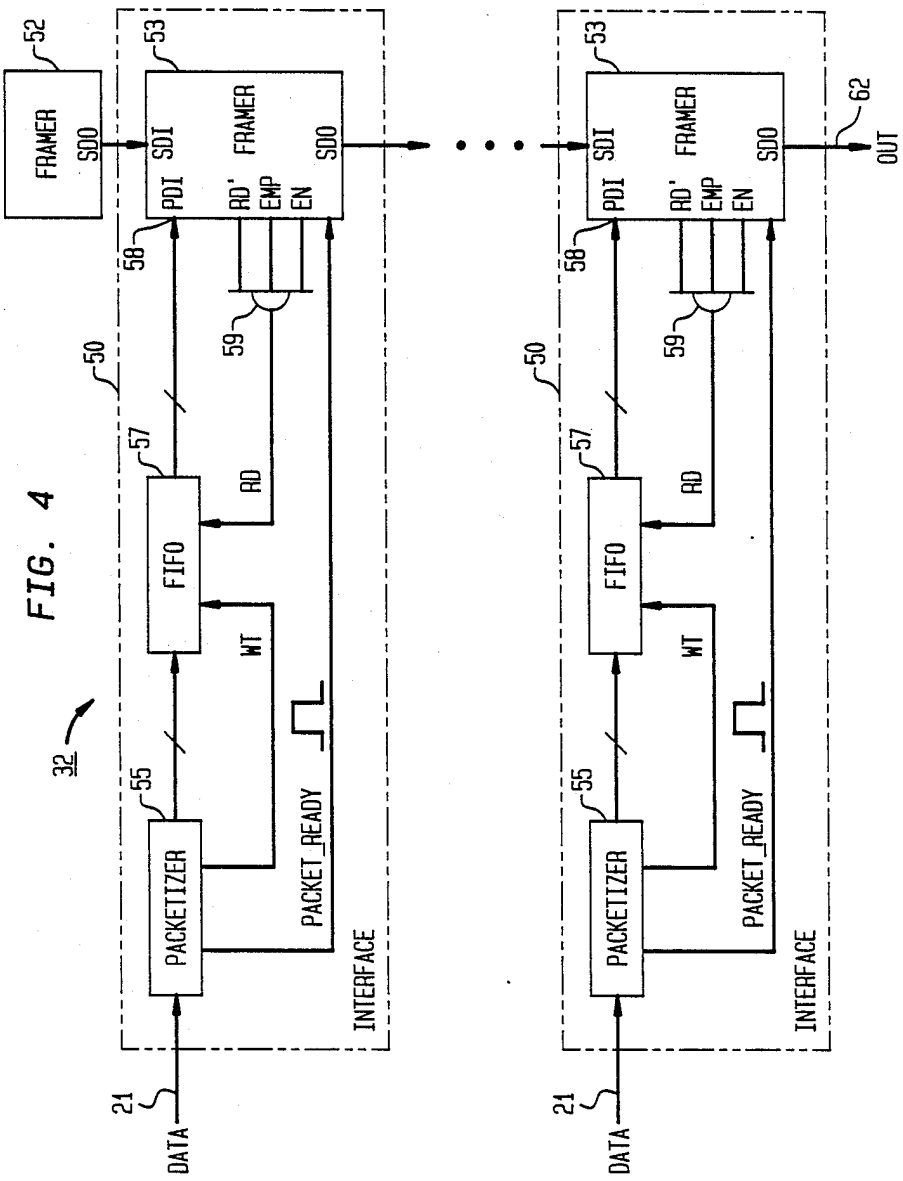
52
FRAMER
SDO
53
SDI
FRAMER
PDI
RD'
EMP
EN
SDO
62
OUT
58
59
50
57
FIFO
RD
WT
55
PACKETIZER
PACKET_READY
INTERFACE
21
DATA
32

FIG. 4

FIG. 5

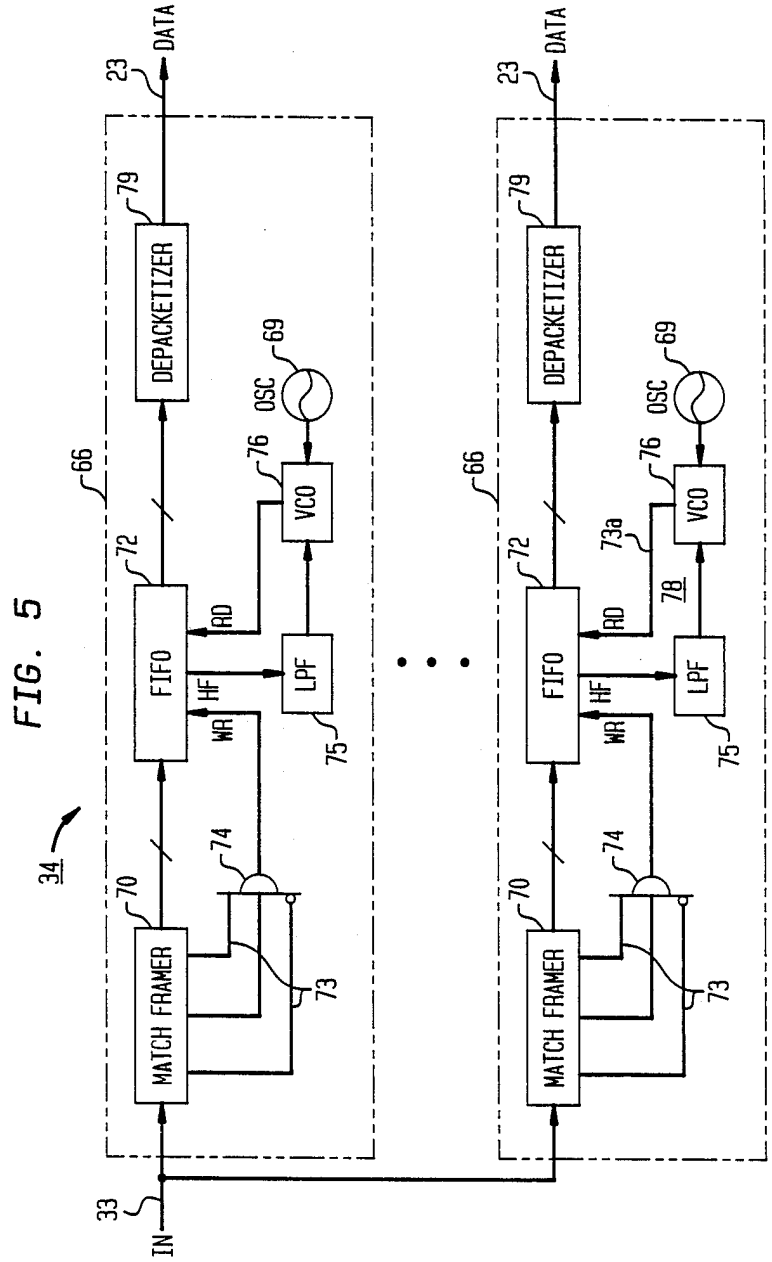
34
23
DATA
79
DEPACKETIZER
69
OSC
76
VCO
66
72
FIFO
RD
HF
WR
LPF
75
74
70
MATCH FRAMER
73
33
IN
73a
78

FIG. 6

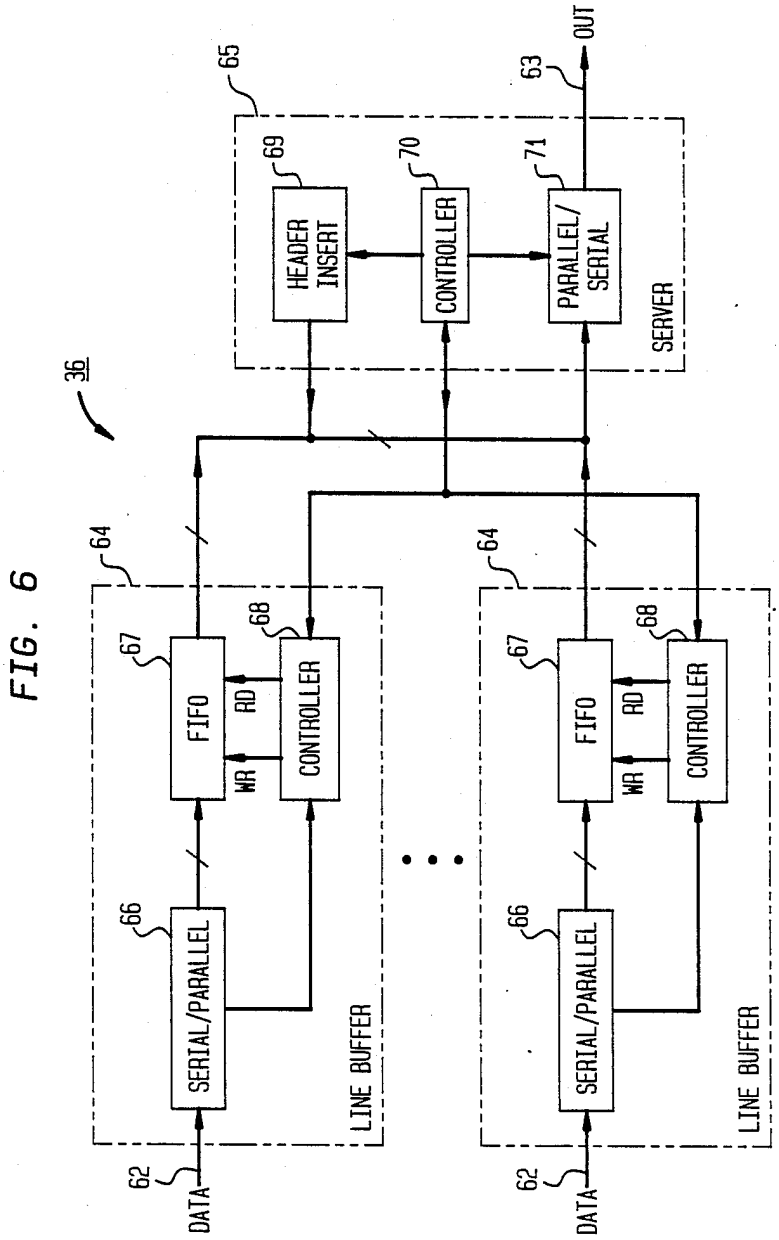
36
65
63
OUT
69
70
71
HEADER INSERT
CONTROLLER
PARALLEL/ SERIAL
SERVER
64
64
67
68
FIFO
RD
WR
CONTROLLER
66
SERIAL/PARALLEL
LINE BUFFER
62
DATA

FIG. 7

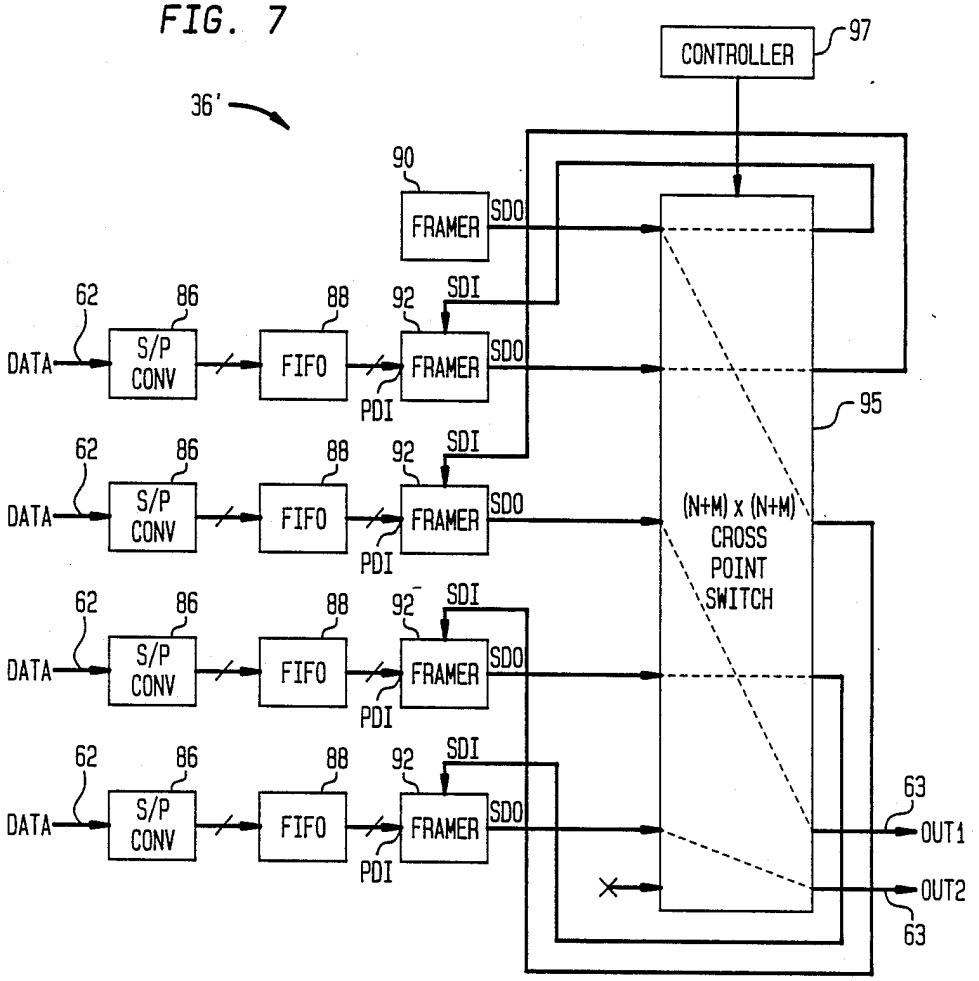
CONTROLLER
97
36'
90
FRAMER
SDO
SDI
62
86
88
92
DATA
S/P CONV
FIFO
PDI
95
(N+M) x (N+M) CROSS POINT SWITCH
63
OUT1
OUT2

FIG. 8

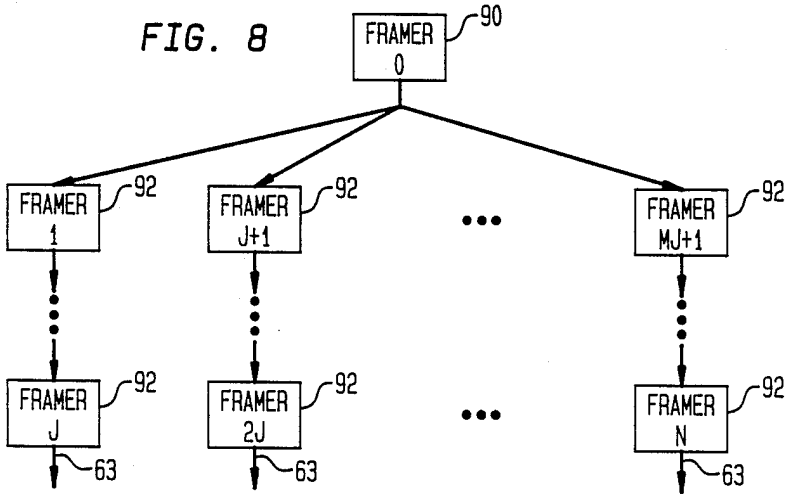
FRAMER 0
90
FRAMER 1
FRAMER J
FRAMER J+1
FRAMER 2J
FRAMER MJ+1
FRAMER N
92
63

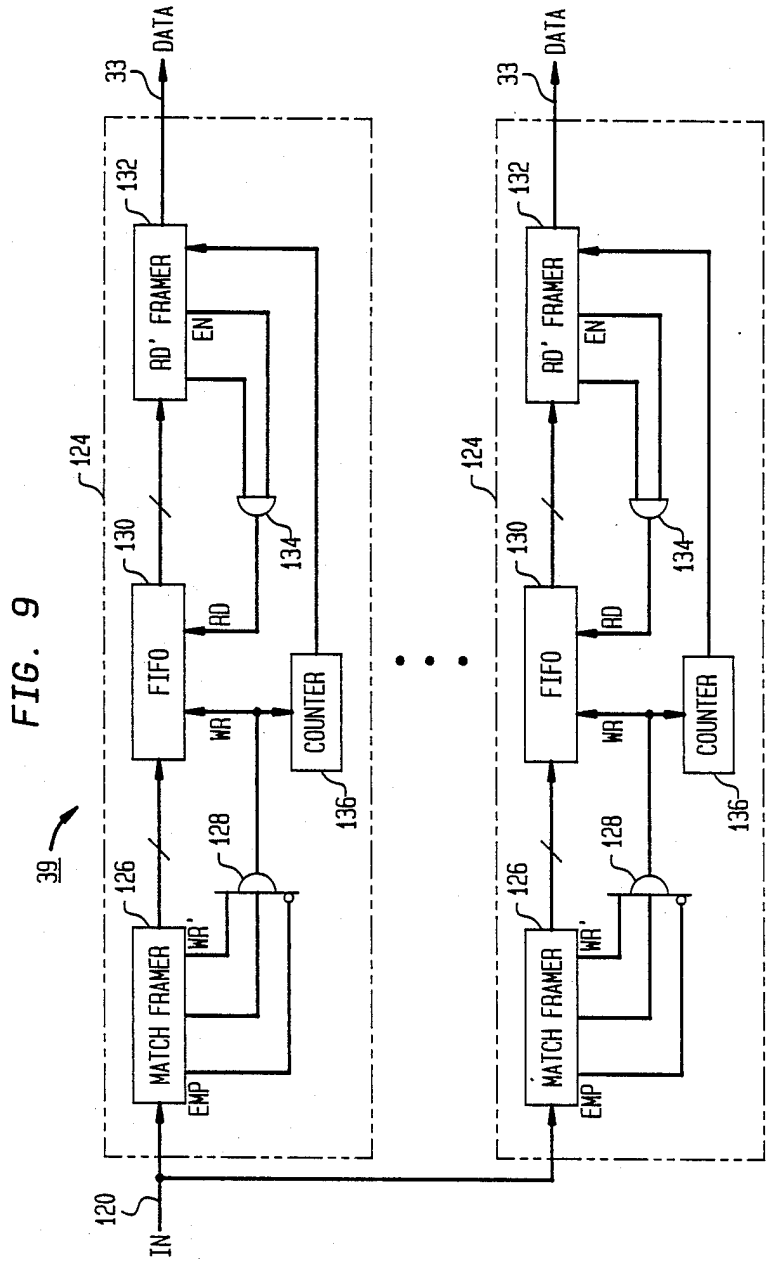
39
120
IN
124
126
MATCH FRAMER
WR'
EMP
128
130
FIFO
RD
WR
132
RD' FRAMER
EN
134
136
COUNTER
33
DATA

FIG. 9

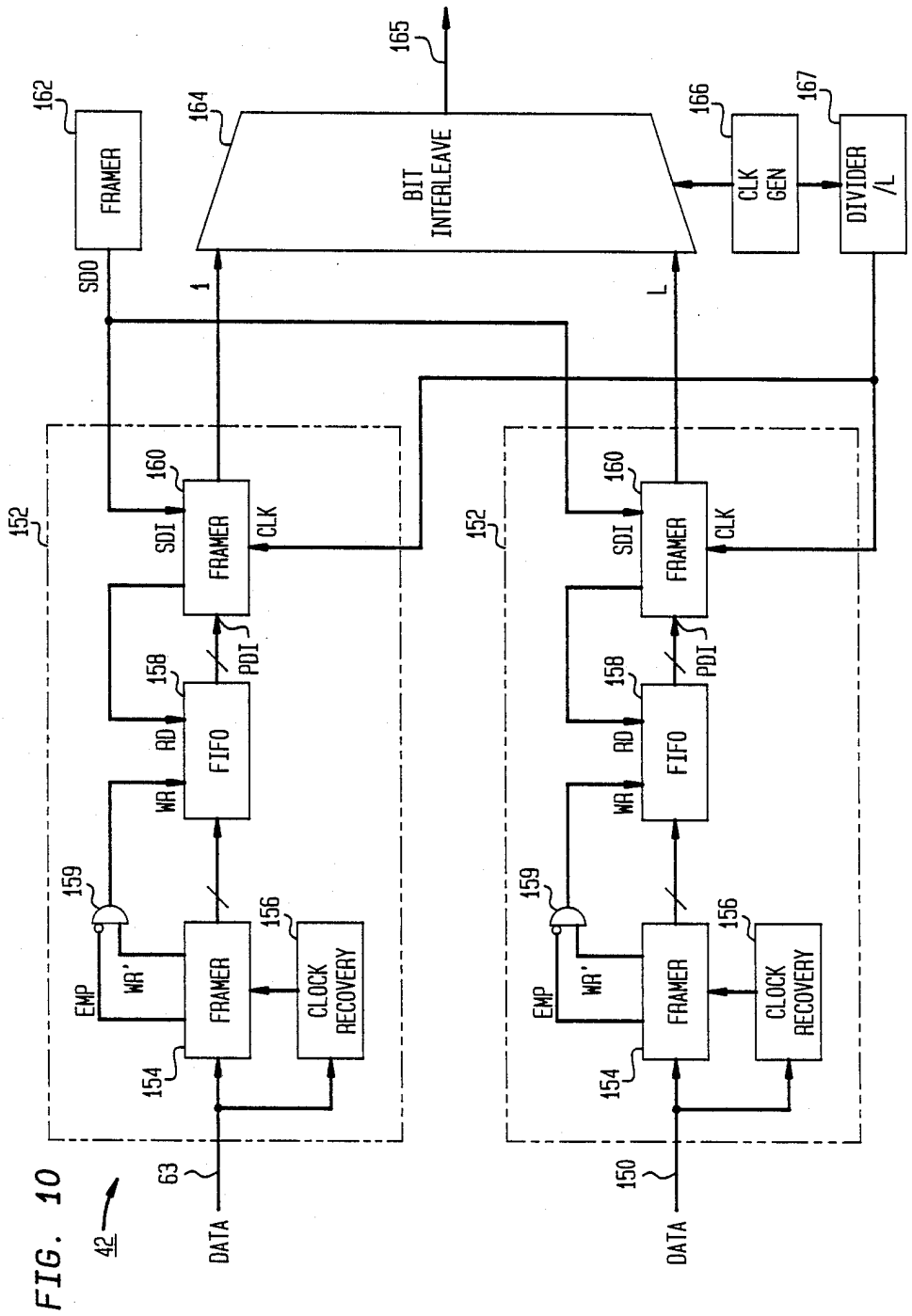
165
162
FRAMER
164
BIT INTERLEAVE
166
CLK GEN
167
DIVIDER /L
SDO
1
L
152
160
SDI
FRAMER
CLK
158
PDI
RD
FIFO
WR
159
EMP
WR'
156
CLOCK RECOVERY
154
63
DATA
150

FIG. 10

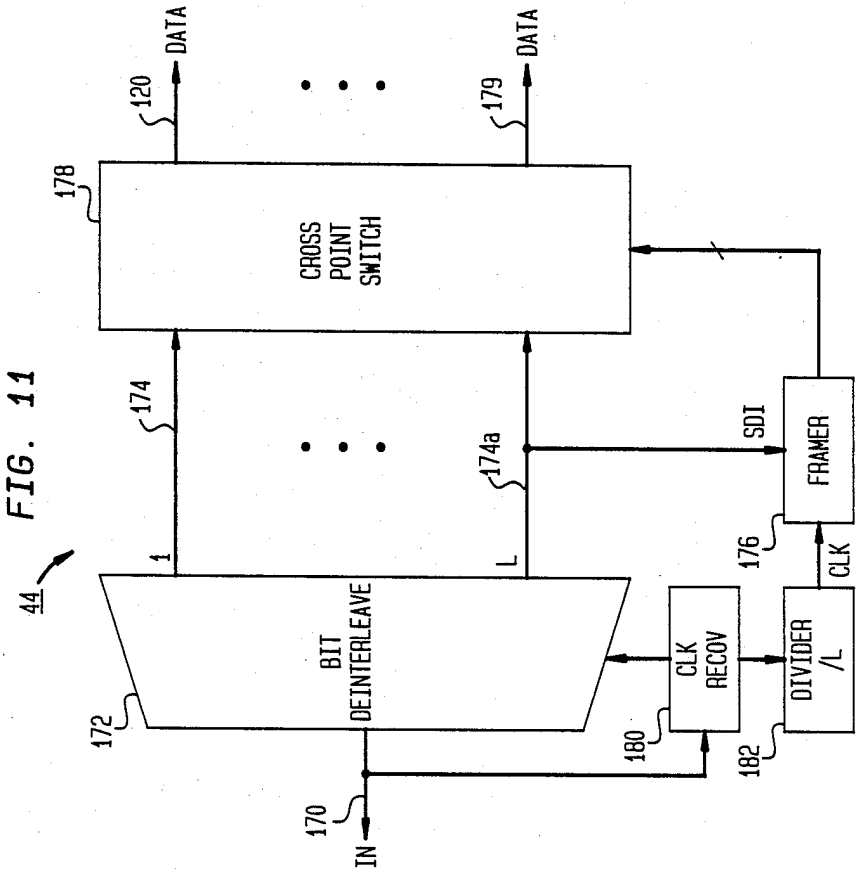
DATA
120
DATA
179
178
CROSS POINT SWITCH
174
174a
SDI
FRAMER
176
CLK
1
L
44
BIT DEINTERLEAVE
CLK RECOV
DIVIDER /L
172
180
182
170
IN

FIG. 11

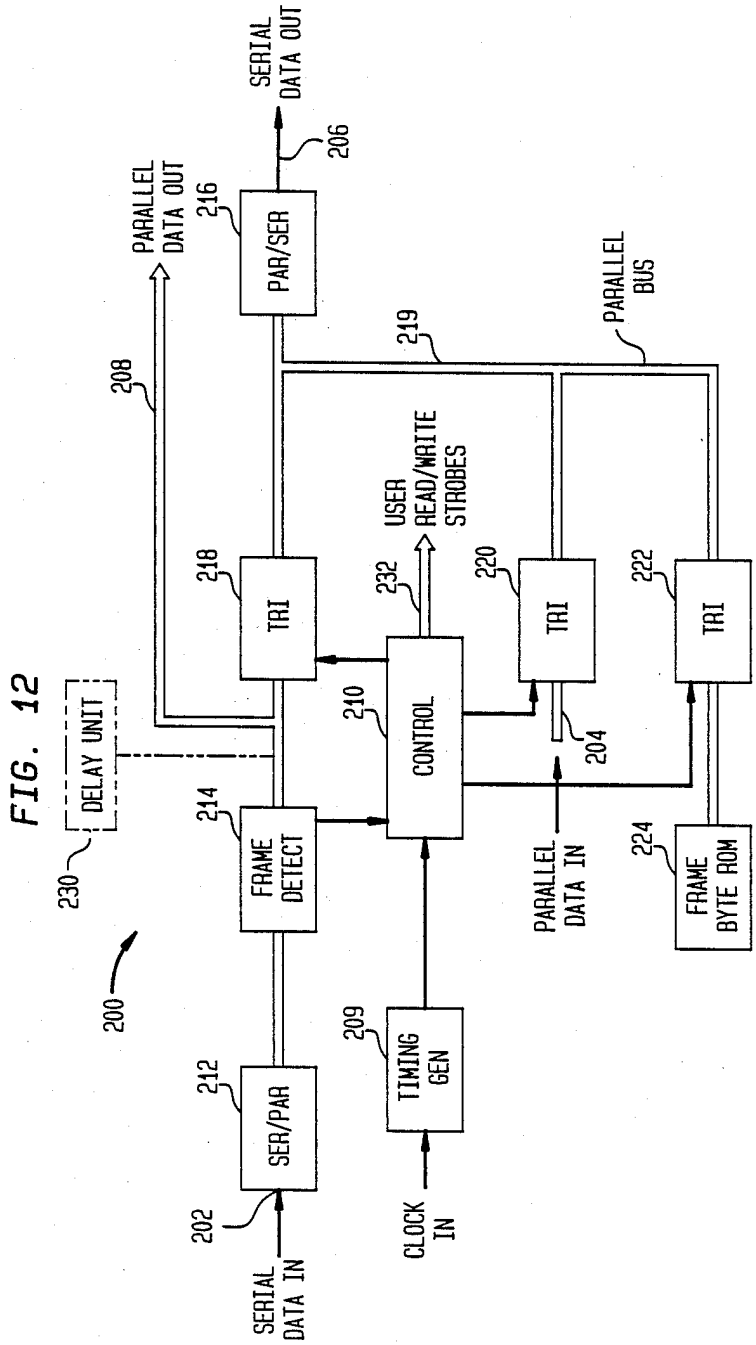
SERIAL DATA OUT
206
PAR/SER
216
PARALLEL DATA OUT
208
PARALLEL BUS
219
USER READ/WRITE STROBES
232
TRI
218
TRI
220
TRI
222
CONTROL
210
DELAY UNIT
230
FRAME DETECT
214
204
PARALLEL DATA IN
FRAME BYTE ROM
224
200
TIMING GEN
209
SER/PAR
212
202
CLOCK IN
SERIAL DATA IN

FIG. 12

TIME DIVISION MULTIPLEXER FOR DTDM BIT STREAMS

RELATED APPLICATIONS

The following applications contain subject matter related to the subject matter of the present application, are assigned to the assignee hereof and have been filed on the same date as the present application.

1. H. J. Chao, "DTDM Multiplexer With Cross Point Switch", having Ser. No. 118,897.
2. M. W. Beckner, F. D. Porter, K. Shu, "DTDM Multiplexing Circuitry".
3. H. J. Chao, S. H. Lee, L. T. Wu, "Dynamic Time Division Multiplexing" having Ser. No. 118,977.
4. M. W. Beckner, T. J. Robe, L. S. Smoot, "Framer Circuit", having Ser. No. 118,898.

FIELD OF THE INVENTION

The present invention relates to a data transmission technique referred to herein as Dynamic Time Division Multiplexing (DTDM) and a set of multiplexers and demultiplexers required to apply DTDM in an actual telecommunications network. DTDM is capable of effectively handling both circuit and packet traffic and thus provides a migration strategy between the present circuit switched telephone network and the future broadband packet switched network. More particularly, the present invention relates to a multiplexer for time division multiplexing a plurality of DTDM bit streams.

BACKGROUND OF THE INVENTION

Presently, there are significant uncertainties when it comes to predicting the future demand for broadband telecommunications services such as high definition video and interactive data communications. This uncertainty in the future demand for broadband telecommunications services has a significant impact on the design of public telephone networks. First, to satisfy the unknown growth pattern in future service demands, it is desirable to have a robust network design that can be easily modified in response to changes in demand for particular telecommunications services. Second, the network must be able to handle vastly different types of traffic ranging from low speed data and voice to full motion video. Third, depending on the demand for wideband services, a network design must be capable of providing a migration strategy from existing copper wires and circuit transmission and switching facilities to optical fibers and the succeeding generations of high speed packet transmission and switching facilities, which packet facilities are used in connection with the delivery of wideband telecommunications services. These three criteria determine the selection of the three major components of a network design: network topology, transmission systems and switching systems. Here, the concern is primarily with transmission systems and transmission techniques which meet the foregoing criteria.

Two important types of commercially used transmission systems are circuit systems and packet systems. Typically, circuit systems utilize time division multiplexing (TDM) as a transmission technique. When TDM is used, each data stream comprises frames which are subdivided into slots. Corresponding slots in each frame are allocated to specific connections. For example, the first slot in each frame is allocated to one specific connection and the second slot in each frame is allocated to a second connection, etc. Each frame also includes a field which contains transmission overhead information including frame synchronization words and control words. This traditional circuit transmission format can be extended to multiple bit rate services by allocating multiple slots in each frame to high bandwidth services. In such circuit transmission systems, a combination of space division switching and time division switching is utilized at the network switches to swap time slots between various bit streams so that connections to and between specific subscribers are established.

Historically, the first digital circuit transmission systems were introduced during the 1960's. These first digital circuit transmission systems were introduced in inter-office trunking applications to carry 24 voice channels by a single 1.544 Mb/sec digital stream. This is known as the DS-1 signal. Subsequently, the wide deployment of digital channel banks in the public telephone network required the multiplexing of several DS-1 signals into a higher speed bit stream to efficiently utilize available transmission links. As the network grew further, continuing efforts to effectively multiplex tributaries having different bit rates into a common bit stream resulted in the well-known hierarchical multiplexing plan comprising the DS-1 (1.544 Mb/sec), DS-1C (3.152 Mb/sec), DS-2 (6.312 Mbit/sec), DS-3 (44.736 Mb/sec) and DS4 274.176 Mb/sec signals.

Conventional circuit transmission systems suffer from a number of shortcomings. Perhaps the most important problem is the multiplexing hierarchy itself. An important result of the hierarchy is an inherent lack of flexibility. Since the network can only transmit the set of signals in the hierarchy, every telecommunications service has to meet the stringent interface requirement of given hierarchical signal bit rates, instead of the particular service being able to transmit at its own natural bit rate. Therefore, the packet mode of transmission which is inherently bit rate flexible is favored for future broadband networks which are to be adapted to deliver enhanced telecommunication services such as high definition video and interactive data communications.

In contrast with circuit transmission systems which transmit data in frames subdivided into slots, packet transmission systems transmit data in discrete blocks or packets, with each packet having an address header at the front thereof. At the network switches, packets are routed from a specific input line to a specific output line, based on address information contained in the packet header. In this way data packets can be routed from a particular subscriber location, through a telecommunications network, to another subscriber location. Packet transmission techniques and especially fast packet transmission techniques (see e.g., R. W. Muise et al., "Experiments in Wideband Packet Technology", Proc 1986 International Zurich Seminar on Digital Communications, pp. 136–138) are inherently bandwidth flexible (i.e. the number of packets generated by a given service per unit time is flexible) and thus are suitable for wideband enhanced communications services. Accordingly, it is desirable to introduce packet transmission technology into the public telephone network, which up to now is based primarily on circuit transmission technology.

The commonly-held view as to how to introduce packet technology into the public network is to deploy

a packet overlay network because the existing network is optimized for circuit transmission and is therefore incompatible with packet transmission techniques. Accordingly, many deployment strategies recommend constructing an overlay packet network for a set of wideband services and hope that the migration of new services to the packet overlay network will allow the existing circuit transmission network to be phased out slowly. The main advantage of a packet overlay network is the quick realization of an end-to-end network for new services. However, the approach requires a large initial capital investment and increases operational cost by requiring the management of multiple separate networks. Accordingly, it is desirable to provide an alternate approach for introducing packet transmission technology into the public telephone network, which approach requires the replacement of existing transmission components but not the implementation of an entirely new network. Thus, it is desirable to provide a digital data transmission system capable of handling both existing hierarchical circuit traffic and packet traffic.

In view of the above, it should be noted that recent advances in network switch designs have blurred the distinction between packet networks and circuit networks. A typical switch for use in a telecommunications network has three major components: control processor, switch interfaces and interconnection network. The control processor handles call set-up and tear-down, maintenance and administrative functions. The switch interfaces convert transmission formats (i.e., the format data has when transmitted between switching nodes) to switch formats (i.e., the format data has when processed within switching nodes). The interconnection network routes information blocks from specific input lines to specific output lines of the switch. For the existing digital circuit systems used in the public telephone network, the information in a specific time slot on an incoming line is transferred, via the switch, to a specific time slot on an outgoing line. Thus, the interconnection network serves as a cross-connect for the incoming signals on a slot-by-slot basis.

It has recently been shown (see e.g., Day-Giacopelli-Huang-Wu, U.S. patent application Ser. No. 021,664 entitled Time Division Circuit Switch, filed on Mar. 4, 1987 and assigned to the assignee hereof) that a switch for use in a circuit network can be built using a self-routing packet interconnection network. An example of such a self-routing packet network is the Batcher-banyan network. Based on the address headers associated with fixed sized packets, the Batcher-banyan network routes a plurality of packets in parallel to specific destination addresses (i.e., specific output lines) without internal collisions. Thus, to mimic the operation of the conventional time-space-time switches used in circuit networks, switch interfaces are provided which perform the time slot interchange function and which are able to insert headers in front of circuit slots to convert such slots into packets for routing through the self-routing interconnection network and able to remove headers from packets leaving the self-routing interconnection network to reconvert packets back into conventional circuit time-slot format.

In addition to circuit and packet transmission, another mode of digital transmission is known as Asynchronous Time Division Multiplexing (ATDM). See e.g., W. W. Chu "A Study of Asynchronous Time Division Multiplexing for Time Sharing Computer Systems" Proc AFIPS Vol 35, pp. 669–678, 1969 and A. Thomas et al. "Asynchronous Time Division Techniques: An Experimental Packet Network Integrating Video Communication" Proc International Switching Symposium, May 1984. ATDM is used in connection with continuous and bursty data traffic. ATDM uses channel identifiers with actual data to allow on-demand multiplexing of data from subscriber terminals with low channel utilization. The channel identifiers and associated data form time slots. However, ATDM is bit rate flexible since the appearance of packets can be asynchronous. Slot timing is obtained from a special synchronization pattern which is inserted into unused time slots. Since the synchronization pattern appears only in unused time slots, ATDM cannot be used to carry existing high speed hierarchical signals wherein the loading is close to one hundred percent.

In short, the situation is that tee present public telephone network utilizes circuit transmission technology and the associated time division multiplexing transmission techniques, while future broadband services, the demand for which is presently uncertain, are best offered using packet transmission technology. It is therefore an object of the invention to provide a transmission system which is capable of integrating present circuit traffic with future packet traffic so as to provide a flexible migration strategy from the existing copper wire based circuit network to succeeding generations of high bandwidth packet transmission networks. It is a further object of the invention to provide a time division multiplexer for use in connection with a particular embodiment of a network utilizing the inventive transmission system.

SUMMARY OF THE INVENTION

The digital network transport system, referred to herein as Dynamic Time Division Multiplexing (DTDM), is a flexible network transport system capable of effectively handling both circuit and packet traffic. By combining conventional time division multiplexing techniques and packet transmission techniques, DTDM enables a flexible transition from the existing circuit type networks to future broadband packet transmission networks.

In a network utilizing DTDM, each transmission bit stream is divided into frames. These frames are the fundamental unit of data transport in DTDM. Each such frame comprises two fixed length fields: overhead and payload. The overhead field includes, for example, a frame alignment word for frame timing and the empty/full status of the frame. The payload field of each frame may be filled with a data packet including header or a slot from a circuit transmission stream. Before a slot from a circuit transmission stream can be inserted into the payload field of a DTDM frame, it must first be converted into a packet-like form with a header at its front. Viewed another way, each occupied DTDM frame comprises a transmission overhead field-, a header field, and a data field. Thus, the DTDM transmission format is a combination of the circuit transmission format and the packet transmission format.

In the DTDM system, packet and circuit traffic can be multiplexed through the same multiplexer. Thus, such a multiplexer can have continuous circuit type tributaries and bursty packet tributaries. To multiplex such diverse traffic, a train of DTDM frames with empty payload fields is generated. This train has a bit rate which defines a basic backbone transmission rate

for the DTDM transmission system. Data in the form of packets or circuit slots with headers attached are inserted into the empty frames to form the DTDM bit stream.

An appropriate analogy is as follows. The stream of empty DTDM frames may be analogized to a train of empty freight cars. The empty freight cars are then filled with data from the various tributaries which may have been in circuit or packet format.

Illustratively, a DTDM multiplexer may be used to merge traffic from three different communications sources or tributaries into a single DTDM bit stream. These tributaries may be a digital phone generating 64 Kilobits/sec PCM voice, a graphics terminal sending bursty data at 1 Megabit/sec, and a circuit transmission stream operating at the DS3 rate of about 45 Megabits/-sec. Illustratively, the bit rate of the backbone DTDM bit stream is 150 Megabits which yields 144,000 frames per second given a 130-byte frame size. The available frames are shared by the three tributaries by giving higher priority to the circuit tributary, and allowing the voice and graphics tributaries to contend on a first-come, first-served basis. The circuit tributary seizes one out of every three empty frames passing by. Thus the regularity of the circuit transmission will be maintained throughout the DTDM transmission link. Illustratively, the voice source is packetized by accumulating up to 15 milliseconds worth of voice samples before inserting this information into an empty DTDM frame along with a header. In this case the voice tributary will on average seized one out of every 2,160 frames. Similar at a rate of 1 Megabit per second, the graphics tributary will fill one frame out of 150. In this way, three diverse data streams are multiplexed into a single bit stream.

As a second example, DTDM can be used as a replacement transmission technology to carry existing inter-office traffic. More specifically, consider the need to multiplex and transmit three hierarchical signals at the DS1, DS2, and DS3 rates, respectively, for point-to-point transmission between two offices. The traditional TDM approach would utilize a step-by-step hierarchical approach to multiplex and to subsequently demultiplex these signals. The conventional hierarchical multiplexing scheme requires line conditioning and synchronization circuitry at each level of the hierarchy as well as hardware for bit interleaving.

In contrast, using a DTDM multiplexer, time slots from each of the three signals would be inserted into the empty frames in a basic DTDM backbone signal. If the backbone signal is 150 megabits per second and comprises 144,000 frames per second, the DS3 signal would require one out of every three DTDM frames, the DS2 signal would require approximately one out of every twenty- one DTDM frames and the DS1 signal would require approximately one out of every eighty-four of the empty DTDM frames.

In an actual network, the above-described DTDM streams at the basic backbone bit rate generally contain empty frames; thus DTDM streams may be multiplexed into more densely populated DTDM bit streams at the same bit rate. These more densely populated basic backbone rate bit streams may then be multiplexed using a time division multiplexer into higher bit rate streams for point-to-point inter-office transmission.

Usually, the most challenging problem in the development of a time division multiplexing system is to synchronize all incoming bit streams so that they have a common bit rate before they are interleaved into a higher bit rate stream. Typically, the input bit streams have the same nominal center frequency but drift independently a small amount from the center frequency. The conventional way to overcome the asynchronization among the input bit streams is positive bit or byte stuffing. Thus, the frequency of the high speed output bit stream is made greater than the product of the nominal center frequency and the number of input tributaries and bit or byte positions are reserved for the occasional stuffing of a dummy bit or byte.

When the incoming tributary bit streams are DTDM bit streams, it is possible to take advantage of the fact that each input bit stream is not **100%** occupied to produce a high speed output bit stream whose frequency is equal to the product of the nominal center frequency of the input tributaries and the number of input tributaries. This can be accomplished through the positive and negative stuffing of DTDM frames. Since the frequency of each input tributary signal can be adjusted in the positive or negative direction through the insertion or removal of empty DTDM frames, it is possible to make the frequency of the high speed multiplexed bit stream exactly an integer multiple of the nominal input tributary frequency.

In accordance with the present invention, a time division multiplexer for time division multiplexing a plurality of DTDM tributary bit streams comprises a plurality of interface units, each interface unit being adapted to receive one input tributary. Each interface includes a circuit for detecting the occupancy of each arriving frame and for discarding unoccupied frames. Data packets from occupied frames are stored in a buffer.

In order to adjust the frequency of each tributary so that it is equal to a nominal frequency and to synchronize all of the tributaries, synchronous bit streams having the nominal tributary frequency and comprising chains of empty frames are generated. One such bit stream is transmitted to each interface unit. Data packets from the buffer at each interface unit are inserted into the empty frames to produce synchronized tributaries at the nominal tributary frequency. These synchronized tributaries are then interleaved to form a high speed outgoing bit stream whose frequency is equal to the product of the nominal tributary frequency and number of input tributaries. The net effect of the interface units is to add or subtract empty DTDM frames so the frequency of each tributary is equal to the nominal frequency and to synchronize the tributaries.

BRIEF DESCRIPTION OF THE DRAWING

FIG. **1** is schematically illustrates the DTDM transmission format;

FIG. **2** schematically illustrates the formation of a backbone DTDM bit stream;

FIG. **3** schematically illustrates an end-to-end network using DTDM;

FIG. **4** illustrates an assembler for combining diverse tributary data streams into a single DTDM stream;

FIG. **5** illustrates a disassembler for separating a DTDM bit stream into diverse tributary data streams;

FIG. **6** illustrates a multiplexer for combining a plurality of DTDM bit streams into a single more densely occupied DTDM bit stream having the same bit rate;

FIG. **7** illustrates an N:M multiplexer for combining a plurality of DTDM bit streams;

FIG. **8** illustrates how the input lines in the multiplexer of FIG. **7** are grouped;

FIG. 9 illustrates a demultiplexer for separating a densely occupied DTDM bit stream into a plurality of less densely occupied DTDM bit streams;

FIG. 10 illustrates a multiplexer for point-to-point transmission, in accordance with an illustrative embodiment of the invention;

FIG. 11 illustrates a demultiplexer for use in connection with point-to-point transmission; and

FIG. 12 illustrates a framer circuit.

DETAILED DESCRIPTION

1. DTDM Transmission Format

DTDM is an approach to data transport which can handle both TDM hierarchical signals and packet traffic in a common integrated structure, while allowing complete bit rate flexibility. As illustrated in FIG. 1, the transmission bit stream is divided into frames 1. The DTDM frame is the fundamental unit of information transport in the DTDM transmission scheme. The frames come one after the other so as to form a continuous chain or train.

Each frame 1 comprises two fixed length fields designated transmission overhead (T) and payload in FIG. 1. Illustratively, each frame comprises 130 bytes with 10 bytes being allocated to the transmission overhead field. Typically, the bit rate of the DTDM bit stream illustrated in FIG. 1 is about 150 Megabits/sec. The following information may be available in the overhead field of every DTDM frame; frame alignment word for frame timing, empty/full status of the frame, and span identification.

As shown in FIG. 1, the payload field of each frame may be filled with a data packet including a header (H) or a slot from a circuit transmission stream. However, before a slot from a circuit transmission stream can be inserted into the payload field of a DTDM frame, it must first be converted to packet-like form by the insertion of a header (H) at its front. Viewed another way, each occupied DTDM frame comprises a transmission overhead field, a header field, and an information field. Thus, the DTDM transmission format is a combination of the circuit transmission format and the packet transmission format. The packet header provides information such as channel number, line number, error detection, etc. In general, only the information required in every frame gets permanent bandwidth allocation in the transmission overhead field.

FIG. 2 schematically illustrates the formation of a DTDM bit stream. The DTDM bit stream assembler 3 can combine into a single bit stream both continuous circuit tributaries and bursty packet tributaries. Three such tributaries are illustrated in FIG. 2. They are: a digital phone tributary 5 generating 64 Kilobits/sec PCM voice, a tributary 7 from a graphics terminal sending bursty data at one megabit per second, and a circuit transmission stream 9 operating at the DS3 rate of about 45 Megabits/sec. Each of the three tributaries has a characteristic shading in FIG. 2 so that it is possible to follow how data from the three tributaries is combined to form the DTDM bit stream.

To multiplex such diverse traffic, a train 10 of DTDM frames with empty payload fields is generated. This train 10 has a bit rate which defines a basic backbone transmission rate for the DTDM system. Each of the frames in the train 10 has an occupied transmission overhead field (T).

Illustratively, the train of frames has a bit rate of about 150 Megabits per second and comprises 144 K blocks/sec. The assembler 3 serves to insert data from the tributaries 5,7,9 into the payload fields of the DTDM frames in the stream 10. To accomplish this, the tributaries 5, 7, 9 are first packetized using packetizers 11, 13, 15, respectively to form the packetized streams 17, 19, 21. Each packet comprises a header (H) and an information field. In the case of the tributary 5, up to 15 milliseconds of speech samples are accumulated to form a packet. In the case of the circuit tributary each slot is converted to packet form by placing a header at the front thereof.

To form the DTDM stream 10, the packets comprising the streams 17, 19, 21 are inserted into the empty payload fields of the empty frames in the stream 10. The empty frames are shared by the three tributaries by giving higher priority to the circuit tributary 9 and allowing the voice and graphics tributaries 5, 7 to contend for empty frames on a first-come, first-served basis. Thus, the circuit tributary seizes one out of very three frames so that the regularity of the circuit transmission is maintained throughout the DTDM transmission link. Similarly, the voice tributary will seize one out of every 2,160 frames and the graphics tributary will seize on average one out of every 150 frames. It should be noted that the bit stream 12 is not 100% occupied and that some frames remain empty. In this way, three diverse tributaries are multiplexed into a single DTDM bit stream.

2. A Network Utilizing DTDM

FIG. 3 schematically illustrates an end-to-end network 20 utilizing DTDM. The network 20 connects to customer premises equipment (CPE) 22, of which three types are illustrated, namely video, voice and data.

In the network 20, three multiplexing stages are required to support end-to-end transport. In the user-network interface stage 30, an assembler 32 receives data streams on lines 21 from the customer premises equipment 22 and combines these streams into a basic backbone DTDM stream of the type discussed in connection with FIGS. 1 and 2. Similarly, disassembler 34 tears apart a basic DTDM bit stream arriving on line 33 and distributes the data to the appropriate customer premises equipment 22 via lines 23.

As indicated above, the DTDM bit stream formed by the assembler 32 is not 100% occupied. Thus the multiplexer 36 in the remote electronics stage 38 is used to combine several DTDM bit streams arriving on lines 62 into a more densely occupied DTDM bit stream of the same bit rate to achieve greater transmission efficiency. Similarly, the demultiplexer 39 separates a densely populated DTDM bit stream arriving on line 120 into less densely populated DTDM bit streams transmitted via lines 33, so that the data contained therein can ultimately be routed to the correct customer premises equipment.

In the point-to-point stage 40, a plurality of DTDM bit streams arriving via lines 63, 150 are time division multiplexed by means of time division multiplexer 42 for high speed point-to-point transmission via line 165 to a network switch (not shown). For example, the multiplexer 42 receives one time division DTDM stream via a line 63 from multiplexer 36 and another DTDM stream via line 150. The DTDM bit stream transmitted via line 150 is formed by DTDM assembler 48, and contains the data of three DS3 tributaries 45.

Time division demultiplexer **44** receives a high speed bit stream from a switch (not shown) via line **170** and demultiplexes this stream into a plurality of DTDM streams. One DTDM stream containing data for customer premises equipment goes to demultiplexer **39** via line **120** and another DTDM stream comprising DS3 slots goes to disassembler **49** via line **179**.

3. DTDM Assembler and Disassembler

The function of the DTDM bit stream assembler **32** of FIG. **3** is to packetize each incoming data stream associated with one particular customer service or transmission channel and then embed these packets into the basic DTDM transmission frames. The assembler **32** is shown in greater detail in FIG. **4**.

The assembler **32** comprises a plurality of interface units **50**. Each interface unit **50** serves to interface an associated data input **21** with the DTDM bit stream. A DTDM bit stream comprising empty frames with empty payload fields is generated by framer unit **52**. A detailed description of the framer unit is provided below.

Each interface unit includes a framer unit **53**. The framer units **52, 53** are connected together in a daisy chain fashion. The frames comprising the DTDM bit stream are passed along the daisy chain from one framer unit to the next. More particularly, the DTDM bit stream leaves the serial data output (sdo) of the framer unit **52** and enters the serial data input (sdi) of the topmost framer unit **53**. The DTDM bit stream leaves the topmost framer **53** via its serial data output (sdo). The DTDM bit stream then enters the serial data input (sdi) of each succeeding framer unit and leaves via the serial data output (sdo) of each framer unit. The DTDM bit stream leaves the serial data output of the lowermost framer via line **62**. As shown in FIG. **3**, line **62** serves to transmit the DTDM bit stream to the DTDM multiplexer **36**. If the DTDM frame currently located at the framer unit **53** of a particular interface **50** is empty, that interface may insert a packet into the payload field of the DTDM frame.

The data inputs **21** to the assembler **32** are connected to the customer premises equipment **22** of FIG. **3** and may have a wide range of bit rates; for example, the data inputs **21** can be video, voice, data, or different digital hierarchical transmission signals (DS-1, DS-2 and DS-3). Therefore, the assembler architecture must be capable of efficiently accommodating different input bit rates and be flexible enough to allow for future expansion or for the changing of particular input connections to different services. The architecture shown in FIG. **3** provides the capability to easily add or drop a particular input service.

Each input **21** is connected to a packetizer **55** which forms part of the associated interface unit **50**. The packetizer **55** puts the incoming data into a packet structure by adding a packet header at the beginning of appropriate segments of the input bit stream. The packet header carries information about the packet, such as packet occupancy, channel identification number, line identification number, check sum and so on. Illustratively, the channel identification number is used to identify the input service from which the packet originated. After the data is put into a packet structure, it is stored in a FIFO **57** with byte wide format. The framer unit **53** then reads the data from the FIFO **57** into its parallel data input (pdi) **58** and generates properly framed data bits which are inserted into an empty payload field of a DTDM frame currently at the particular framer unit **53**.

However, a framer unit **53** will not read the data from the FIFO **57** unless two conditions are met. One is that the "packet- ready" pulse signal from the packetizer **55** is asserted, indicating one packet is completely stored in the FIFO. The other condition is that the incoming DTDM frame on the serial data input (sdi) of the framer **53** is not already occupied by a valid packet, i.e. the incoming DTDM frame is empty. Thus, an empty or "emp" signal is transmitted from the framer **53**. The "packet-ready" signal triggers an enable signal, "en", in the framer unit to be asserted for the whole frame transmission period allowing the data packet to be moved from the FIFO **57** through the framer **53** and into the DTDM bit stream. Using the "emp" and "en" signals, control logic **59** controls the reading of a packet out of the FIFO **57** and into the framer **53**.

Since the framer units **53** are daisy-chained together, the contention for empty DTDM frames is automatically resolved in favor of input services having positions closer to the empty frame generator.

In order to simplify the assembler **32** of FIGS. **3** and **4** and hence reduce the building cost, one practical assumption may be utilized; the total traffic of all inputs at any given time is less than the bit rate of the basic backbone DTDM stream.

The topmost framer **52** in FIG. **4** does not have any input service connected to it. It generates the chain of empty DTDM frames which are sent to the following framers **53**. If none of the interfaces **50** insert a packet into a particular frame, an empty frame is finally sent out through the serial data output (sdo) of the bottommost framer unit on lead **62**.

After the DTDM bit stream has traveled through the entire communications network **20** of FIG. **3**, which network includes multiplexers, switches, and demultiplexers, etc., the DTDM bit stream is disassembled and the data distributed to the appropriate customer services equipment. In the network **20** of FIG. **3**, the disassembler **34** is used for this purpose. The disassembler **34** is shown in greater detail in FIG. **5**. Illustratively, the disassembler **34** removes both the transmission overhead and packet header field from each incoming DTDM frame and distributes the data contained in the frame to the desired customer premises device.

More particularly, the assembler **34** comprises a plurality of interfaces **66**. Each interface **66** receives the incoming DTDM bit stream via line **33** (see FIG. **3**) and is illustratively connected to one customer premises device via an output lines **23** (see FIG. **3**). Each incoming DTDM frame is simultaneously received by the framer unit **70** in each interface **66**. However, only packets containing data to be transmitted to the associated customer premises equipment are transferred from the framer **70** to the associated FIFO **72**. To accomplish this, the packet occupancy and channel identification number are examined by the framer **70**. The framer **70** in turn generates proper control signals via lines **73**, which, along with control logic **74**, determine whether or not the packet carried in the payload field of the particular DTDM frame will be written into the FIFO **72** of the particular interface unit so that the data contained in the packet can be transmitted to the associated customer premises equipment.

Recovering the correct frequency from the incoming data is a very challenging task. Although for each kind of customer premises equipment or service the fre-

quency is known, the difference between the local reading clock used to read data out of the FIFO **72** and the clock which was used to load data into empty frames at the transmit end may result in overflow or underflow of the FIFO **72**. Illustratively, a phase locked loop **78** is used to modify the local reading clock in order to cancel this difference in clock rates.

As shown in FIG. **5**, the local reading clock signal (line **73***a*) used to read data out of the FIFO **72** is phase locked with the incoming data so that the data can be read out correctly from the FIFO **72** without overreading or underreading. The rate at which data is read out of the FIFO is determined by the frequency of the voltage controlled oscillator **76** in the phase locked loop **78**.

The packet is written into the FIFO **72** with the network clock rate, but read out at a rate dependent on the particular equipment to which the data is transmitted. An "hf" signal which indicates that the FIFO **72** is half full is smoothed out by a low- pass filter **75** whose output is used to control the output frequency of a voltage-controlled oscillator **76**. If information is read out of the FIFO **72** faster than information is written into the FIFO **72**, then the "hf" signal will not be asserted. This causes the voltage output from the low-pass filter **75** to decrease, reducing the output frequency produced by the voltage controlled oscillator and reducing the rate at which data is read out of the FIFO **72**. Similarly, if information is read out of the FIFO more slowly than it is being written into the FIFO **72**, the "hf" signal will be asserted and the voltage controlled oscillator frequency will be increased so that the read clock signal frequency is larger. The same interface unit **66** can be used for different customer premises devices by choosing a proper frequency for oscillator **69**.

Data packets read out of the FIFO units **72** are depacketized by means of depacketizer circuits **79** which serve to remove the headers. The resulting data is then transmitted via lines **23** to the appropriate customer premises equipment.

4. DTDM Bit Stream Multiplexer and Demultiplexer

The function of the DTDM bit stream multiplexer **36** of FIG. **3** is to concentrate a plurality of relatively sparsely occupied incoming DTDM streams into at least one more densely occupied DTDM stream of the same bit rate, resulting in more efficient use of the transmission facility. There is more than one architecture for implementing the DTDM multiplexer **36** of FIG. **3**.

One embodiment of such a DTDM bit stream multiplexer is illustrated in FIG. **6**. The DTDM multiplexer **36** of FIG. **6** comprises N input lines **62** (see FIG. **3**) and one output line **63** (see FIG. **3**). Line buffers **64** recognize and queue incoming DTDM frames. The server **65** looks for newly arrived DTDM frames in the line buffers **64**, adds a proper line number in the header field, and sends the frames out in a more densely occupied DTDM bit stream.

The primary functions of the line buffers **64** are recognition and queuing of incoming DTDM frames. Each line buffer contains a serial/parallel converter **66** for converting incoming serial DTDM frames into parallel form and a first-in, first-out buffer **67** with capacity for multiple frames. A timing and control circuit **68** operates the line buffer and interfaces it with the server.

The main functions of the server **65** are to look for newly arrived DTDM frames in the line buffers, to modify the header field to include a line number, and to place the DTDM frame in a more densely occupied DTDM bit stream. The server comprises a header insert circuit **69** for modifying the header field of the DTDM frames, a controller circuit **70** for interfacing with the line buffers **64**, and a parallel to serial converter **70**. The operations of the server are pipelined; while the server reads a DTDM frame from a line buffer and places it in an outgoing DTDM stream, it continues searching line buffers for DTDM frames. It should be noted that the multiplexer of FIG. **6** is useful for multiplexing packets in non-DTDM transmission formats in addition to being useful for DTDM bit streams.

Another possible architecture for a multiplexer capable of combining several relatively sparsely occupied DTDM bit streams into a more densely occupied DTDM bit stream of the same bit rate builds on the architecture of the DTDM bit stream assembler **32** of FIG. **4**. Each input to an interface unit **50** of FIG. **4** is replaced by a serial data link on which a DTDM bit stream arrives. The data packets contained in the frames comprising the incoming DTDM bit stream contend for output frames in an outgoing DTDM bit stream. The frames comprising the outgoing DTDM bit streams ar generated by the framer **52** and passed along the chain of interconnected framers **53**. The interface units **50** insert data packets from incoming DTDM frames into the frames of the outgoing bit stream to form a more densely occupied DTDM bit stream. The contention for output frames is resolved automatically by the daisy-chained connection of the framer units. Note that no packetizer is needed in the interface units, and the length of each FIFO is preferably more than two frames to prevent data packets contained in incoming frames from being lost.

FIG. **7** schematically illustrates an alternative DTDM bit stream multiplexer for combining a plurality of relatively sparsely occupied DTDM bit streams into a smaller number of more densely populated DTDM bit streams of the same bit rate. The multiplexer **36'** of FIG. **7** has the flexibility to receive N input DTDM bit streams and to transmit M output DTDM bit streams, which allows M output lines to be shared by N input lines. It is known that both the probability of buffer overflow and the average delay for bursty traffic can be significantly decreased by increasing the number of outputs.

Using the multiplexer architecture **36** shown in FIG. **6**, it is difficult to build an N:M multiplexer, because the service order is determined by a single central server. However, it is possible to provide a multiplexer system comprising M separate multiplexers of the type shown in FIG. **6**, each having N/M input lines and line buffers and one server and associated output line. In contrast, the service order in the multiplexer **36'** of FIG. **7** is determined locally, which results in the flexibility of reassigning input lines to different output lines based on the input traffic statistics.

The N:M multiplexer **36'** of FIG. **7** comprises a plurality of input lines **62** (see FIG. **3**) and a smaller number of output lines **63** (see FIG. **3**). DTDM frames arriving on the input lines **62** are converted into a byte wide stream by means of the serial-to- parallel converters **86** and stored in the associated buffers (FIFOs) **88**. The operation of the framer units **90, 92** is similar to those in the DTDM bit stream assembler of FIG. **3**. Each framer **90, 92** has a parallel data input (pdi), a serial data input (sdi) and a serial data output (sdo). Framer **90**, the head-end framer unit, doesn't have any input lines connected to it. In normal operation, it continuously sends out a

chain of empty frames. The remaining framers **92** take data comprising occupied DTDM frames in the buffers **88**, and insert this data into the empty frames generated by the framer **90**, so as to combine a plurality of sparsely occupied DTDM bit streams into a smaller number of more densely populated DTDM bit streams.

The N:M multiplexer **36'** of FIG. **7** comprises an (N+M) x (N+M) broadcasting cross point switch network **95**. The serial data output (sdo) of each framer **90**, **92** is connected to an input of the switch, and the serial data input (sdi) of each framer **92** is connected to an output of the switch as shown in FIG. **7**. The connections through the switch network are controlled by a dedicated controller **97**.

Illustratively, when the system is initialized, the N input lines **62** are divided into M groups, (1,2 . . . , J), (J+1, J+2, . . , 2J), . . . , (MJ+1, . . . , (M+1)J), where J=N mod M. The J input lines in each group are logically connected as shown in FIG. **8**. Each group of input lines is associated with one output line Thus, all of the DTDM frames arriving at the inputs of one group are merged into a single DTDM bit stream which leaves via the associated output. The topmost framer unit **92** in each group receives empty frames broadcast from the framer **90**. Each frame is then passed through the switch **95** from one framer in the group to the next framer in the group. If a particular FIFO **88** has data comprising a DTDM frame and the associated framer **92** receives an empty frame, the data is inserted into the empty frame. Thus, within each group service priority is ranked in descending order with the higher priorities near the top. Ultimately, M relatively densely occupied DTDM bit streams leave the multiplexer of FIG. **6** via the outputs **63**.

Thus, with the addition of the cross point switch, more than one framer **92** receives empty frames from the framer **90** at the same time. This achieves the N:M multiplexing function automatically and with minimal complexity.

If the input lines are not grouped so as to distribute output traffic evenly, the input lines can be regrouped easily by changing the connections within the switching network **95**. For example, a particular input in the first group of inputs may be assigned to any other group, e.g., the second group of inputs, to spread out traffic evenly. The controller **97** must know the traffic statistics of each input line and follow some algorithm to rearrange the inputs and decide the ordering (priority) within each group.

The DTDM multiplexer of FIG. **7** may route DTDM frames arriving on the same input line to different output lines. For example, n frames arriving on an input line have been sent to output #1. But the (n+1)th frame may be switched to output #2 because reconfiguration took place to balance traffic among the output lines. This may cause an out of sequence problem if the (n+1)th frame arrives at the receive end before the nth frame does. The cost to reorder the frame sequence at the output end may be high. Illustratively, to avoid this problem, one rule may be followed: the input lines carrying services with high bit rate information, such as video, will not be switched from one input line group to another during the service period. For a low bit rate service, such as voice at 64 Kb/s, even if two consecutive frames containing data are dispatched onto two different output lines, the two frames from such a bursty service will be separated by more than several hundred frame intervals. Hence, it is unlikely for there to be an out of sequence problem in this case.

It should be noted that multiplexer architecture of FIG. **7** ma be used to multiplex other types of traffic besides DTDM traffic. For example, streams of data packets may be multiplexed together to form more densely occupied streams.

Turning now to FIG. **9**, the DTDM bit stream demultiplexer **39** of FIG. **3** is illustrated in greater detail. The function of the DTDM bit stream demultiplexer **39** is to separate a relatively densely occupied incoming DTDM bit stream into a plurality of relatively sparsely occupied outgoing DTDM bit streams of the same bit rate so that the user data in the frames can ultimately be transported to the proper customer premises devices.

The demultiplexer **39** of FIG. **9** has one input line **120** (see FIG. **3**) and a plurality of output lines **33** (see FIG. **3**). Each output line **33** is connected to the input line **120** by means of an associated interface **124**. Any incoming DTDM frame is simultaneously received by the framer unit **126** in each interface **124**. The frame occupancy and line identification number of each incoming DTDM frame are examined by the framers **126**. If the frame is not empty and the line number is matched, the packet contained therein will be written into the FIFO **130** under the control of logic **128** and then read out of the FIFO **130** by the framer **132** at the output end of the interface **124** under the control of logic **134**. Otherwise, the packet is simply discarded. In this manner, the data from each incoming frame is routed to the correct output line. A counter **136** in each interface is used to count the number of bytes written into the FIFO **130** and generates a signal when a full packet is stored in the FIFO. This signal will inform the output framer **132** to start reading the packet in the FIFO. The framer **132** will assert the "en" signal during the reading of the entire packet. The framers **132** generate sequences of DTDM frames. These sequences of frames leave the framers **132** via the serial data outputs and form the outgoing DTDM bit streams on the lines **33**. When data packets are present in the FIFOs **130** they are inserted into the frames generated by the framers **132**. In particular embodiments of the demultiplexer, the functions of the framer units **126**, **132** may be performed by a single framer unit.

5. Time Division MUX/DEMUX for DTDM Bit Stream

After relatively sparse DTDM bit streams are concentrated into more densely populated DTDM bit streams of the same bit rate using for example, the DTDM multiplexer **36** of FIG. **3**, a plurality of such more densely populated bit streams may be time division multiplexed into a higher speed data stream using, for example, the time division multiplexer **42** of FIG. **3**. Such high speed data channels may be used for communications to and from central offices.

Usually, the most challenging work in a time division multiplexing system is to synchronize all incoming bit streams so that they have a common bit rate before they are interleaved into a higher bit rate stream. Typically, the input bit streams have the same nominal center frequency but drift independently a small amount from the center frequency. The conventional way to overcome the asynchronization among the input bit streams is positive bit or byte stuffing. The frequency of the high speed output bit stream is made greater than the product of the nominal center frequency and the num-

ber of input tributaries. There is usually a bit or byte position reserved for the occasional stuffing of a dummy bit or byte. Also, there is some control overhead used to indicate if the bit or byte at the stuffing position is valid.

By taking advantage of the fact that the frames comprising each input DTDM bit streams are not 100% occupied, the frequency of the higher speed output bit stream can be made exactly equal to the nominal center frequency of the input tributaries times the number of the input tributaries. In the case of a DTDM system, this can be accomplished through the positive and negative stuffing of DTDM frames. Since the frequency of each input tributary signal can be adjusted in the positive or negative direction through the insertion or removal of an empty DTDM frame, it is possible to make the frequency of the high speed multiplexed bit stream exactly an integer multiple of the nominal input tributary frequency.

A time division multiplexer **42** (see FIG. **3**) for multiplexing a plurality of DTDM bit streams is illustrated in FIG. **10**. Each input **63**, **150** (see FIG. **3**) is connected to an interface unit **152**. Each interface unit **152** comprises a framer **154** which is clocked by a clock signal derived from a clock recovery circuit **156**. The derived clock, which is the actual frequency of the tributary, may differ slightly from the nominal tributary frequency as discussed above. This difference between the nominal and actual frequencies is eliminated in the interface unit. Each incoming DTDM frame will be examined by the framer **154** in the associated interface **152** for its occupancy. The data packets contained in the occupied frames will be written into the FIFO **158** under the control of logic **159** and read out later by the framer **160** at the output end of the interface unit **152**. Empty frames are discarded.

The reading of the data packets from the FIFOs **158** to the parallel data inputs (pdi's) of the framers **160** is synchronized. The serial data input (sdi) of each framer **160** is connected to the serial data output of a framer **162**. The framer **162** serves to broadcast empty frames to the framers **160** so that each framer **160** receives a synchronous chain of empty frames at the nominal tributary frequency. The empty frames received by each framer unit **160** are filled with data packets from the associated FIFO **158** to produce synchronized tributary bit streams at the nominal tributary frequency.

If the actual frequency of a particular tributary is less than the nominal center frequency then on occasion, the associated FIFO **158** will not have a packet to insert into an empty DTDM FRAME. The net effect is that an empty DTDM frame is added so that the tributary acquires a frequency equal to the nominal frequency. However, if the actual frequency of the tributary is larger than the nominal center frequency the net effect is that empty DTDM frames are dropped so that the tributary acquire a frequency equal to the nominal frequency. Illustratively, the difference between the actual and nominal tributary frequencies is on the order of ten parts per million. In this case, a two frame capacity FIFO **158** is sufficient as long as each input tributary has one empty frame in 10^5.

All of the framers **160** send out frames at the same time, with frame alignment being automatically achieved. The aligned frames are then bit interleaved using bit interleaving circuit **164** to produce a single high bit rate bit stream at output **165** (see FIG. **3**). Note that the clocks of the framers **160** are connected together so that data bits coming from the framers **160** are phase aligned and can be bit interleaved directly. The clock for the framers **160** is provided by the cock generator **166** and frequency divider **167**. In an alternative embodiment of a time division multiplexer, instead of bit interleaving, frame or byte interleaving may also be used. If the frame interleaving is used then the multiplexed output bitstream has the same DTDM frame structure, thereby allowing the flexible single transport architecture to grow as the technology advances.

A time division demultiplexer **44** (see FIG. **3**) for demultiplexing the high speed bit stream is illustrated in FIG. **11**. The high speed data stream arrives on input line **170** (see FIG. **3**) and is bit deinterleaved by means of bit deinterleave circuitry **172** into several lower speed tributary bit streams which are transmitted outward on lines **174**. In order to dispatch the bits to correct tributaries, a predetermined span identification (SP ID) is inserted for each tributary before they are multiplexed at the transmit side. The tributary present on line **174***a* is connected to a framer unit **176**, which will detect the frame boundary and determine by examining the span identification whether or not the bit deinterleave circuitry has correctly aligned the incoming bit stream so that appropriate data goes to appropriate output tributaries. If not, either a skip pulse is generated to rotate the bit sequence or a signal is generated by the framer **176** and sent to a cross point switch **178** to reassign the order of the bit stream. The bit streams with correct bit assignments appear at outputs **120**, **179** (see FIG. **3**). Alternatively, instead of the crosspoint switch **178**, a barrel shifter may be used. It should be noted that the clock for the bit deinterleave circuit **171** and framer **176** is provided by clock recovery circuit **180** and frequency divider **182**. Demultiplexers which operate according to similar principles are disclosed in R. J. Boehm et al. "Standardized Fiber Optic Transmission Systems — A Synchronous Optical Network View" IEEE Journal on Selected Areas in Communications VOL SAC-4 No. 9 pp 1424–1431 Dec. 1986 and L. R. Linnell "A Wide-band Local Access System using Emerging- technology Components" IEEE Journal on Selected Areas in Communications" VOL SAC-4 No. 4 pp 612–618 July 1986.

6. The Framer Circuit

The framer unit is an important component for the implementation of specific embodiments of the assemblers, disassemblers, multiplexers and demultiplexers which comprise the DTDM network discussed above.

The framer unit performs a number of functions in the DTDM network, including generating trains of empty DTDM frames, enabling the writing of data packets into specific DTDM frames, and the examination of header data in specific DTDM frames to generate signals for the control of peripheral circuits (e.g. in a DTDM demultiplexer to determine if data in a particular DTDM frame belongs to particular customer premises equipment or a particular less densely occupied DTDM bit stream). All of these functions may be carried out by the framer unit discussed below.

A framer unit **200** is schematically illustrated in FIG. **12**. Illustratively, the framer unit **200** is formed as a single chip. The framer unit **200** has a serial data input **202**, a parallel data input **204**, a serial data output **206** and a parallel data output **208**. Timing information for the framer unit **200** is provided by timing generator **209**. The framer **200** operates under control of a control unit

210 which illustratively comprises one or more finite state machines.

As indicated above, a plurality of framer units may be connected in a daisy chain fashion and DTDM frames may be passed from one framer to the next (see e.g., framers 53 of FIG. 4). Data may be written into an empty DTDM frame as follows. A DTDM frame is received at the serial input 202. The DTDM frame is converted to parallel form by serial-to-parallel converter 212 and is detected by frame detector 214. The frame detector 214 is in communication with the control 210 and illustratively communicates to the control 210 information such as whether or not the frame is empty. Illustratively, the DTDM frame leaves the framer unit via the serial output 206 after conversion to serial form by way of parallel-to-serial converter 216. However the frame cannot reach the parallel-to-serial converter 216 unless the control 210 applies a signal to the tristate device 218.

The data to be written into the frame is received at the parallel data input 204 (illustratively from a FIFO 57 in the DTDM bit stream assembler 32 of FIG. 4). If the particular DTDM frame is empty and data is available at the parallel input 204, a signal is applied by the control 210 to the tristate device 220 to enable the data to be inserted into the particular DTDM frame via bus 219 before it leaves the framer unit. However, if the DTDM frame is already full the control does not provide such a signal to the tristate 220. In particular framer units additional information such as span identification may be inserted into specific DTDM frames by means of an additional tristate unit not shown.

The framer unit 200 may also be utilized to generate a chain of empty DTDM packets (see e.g., framer 52 in FIG. 4). In this case the serial input 202 and associated serial-to-parallel converter 212 are not utilized. Instead, the control 210 applies a periodic signal to tristate 222 so that a frame alignment word is periodically read from frame byte ROM 224 and transmitted via bus 219 to parallel-to-serial converter 216 and serial output 206 so as to define a train of empty DTDM frames. Other information comprising the transmission overhead (T) field of the DTDM frame may also be stored in ROM 224 or provided by other sources connected to the bus 219 via a tristate device operative under the control of the control unit 219.

In particular situations (see e.g., framers 70 of FIG. 5 and 126 of FIG. 9), a framer unit receives occupied DTDM frames and the header (H) or transmission overhead (T) fields have to be examined to control peripheral circuit operations such as the reading of data into a FIFO. In this case, a multiple byte delay unit 230 may be included in the path between the serial input 202 and the parallel and serial outputs 208, 206. Typically a frame arrives at the serial input 202 and is converted to parallel form by the serial-to-parallel converter 212. The frame detector detects the frame and supplies necessary information from the header or transmission overhead fields to the control unit 210 which issues appropriate control signals via lines 232 such as user read/write strobes. Illustratively, the user read/write strobes control the writing of data from DTDM frames in the framer unit into associated FIFOs or other buffers. If the FIFO has byte wide format, the parallel output 206 may be used for this purpose. The delay unit 230 is used to insure that the necessary signal processing takes place before the DTDM frame leaves the framer unit.

7. Conclusion

A multiplexer for time division multiplexing a plurality of DTDM bit streams has been disclosed.

Finally, the above described embodiments of the invention are intended to be illustrative only. Numerous alternative embodiments may be devised by those skilled in the art without departing from the spirit and scope of the following claims.

What is claimed is:

1. A multiplexer for the time division multiplexing a plurality of input tributaries comprising input frames arranged to propagate data packets at a nominal tributary frequency to form at least one high speed outgoing bit stream, said multiplexer comprising

means for detecting the occupancy of said input frames containing propagating data packets and for discarding said input frames containing no data packets,

means for storing said propagating data packets contained in said input frames,

means for generating a bit stream at said nominal tributary frequency for each of said input tributaries, each said bit stream including empty frames,

means for inserting said stored data packets from said storage means into said empty frames so that each of said tributaries has a frequency equal to said nominal frequency, and

means for interleaving said tributaries to form said high speed outgoing bit stream.

2. A multiplexer for time division multiplexing a plurality of incoming tributary bit streams comprising frames, said multiplexer comprising:

means for receiving each of said incoming tributary bit streams,

means for synchronizing said tributary bit stream and for adjusting the frequency of each of said incoming tributary bit streams to equal a nominal tributary frequency by adding or deleting empty frames, and

means for interleaving said tributary bit streams to form a high frequency bit stream having a frequency equal to the product of the number of incoming tributary bit streams and said nominal tributary frequency.

3. The multiplexer of claim 2 wherein said frames are DTDM frames.

4. A multiplexer for time division multiplexing a plurality of incoming tributary bit streams comprising frames to form at least one high speed outgoing bit stream, said multiplexer comprising

a plurality of interface units, each of said interface units being adapted to receive an associated one of said incoming tributary bit streams and to transmit the associated bit stream at a bit rate equal to a nominal bit rate by adding or removing empty frames, each of said interface units transmitting its associated bit stream synchronously with the other transmitted bit streams, and

means for interleaving said transmitted bit streams to form said high speed outgoing bit stream.

5. The multiplexer of claim 4 wherein said multiplexer includes broadcasting means for simultaneously broadcasting empty frames to said interface units, and wherein each of said interface units comprises

means for receiving the associated input tributary bit stream and for storing data contained therein, and

means for receiving said broadcast frames from said broadcasting means and for inserting said stored data into said broadcast frames so that all of said transmitted bit streams are synchronous and have a frequency equal to said nominal frequency.

6. The multiplexer of claim 4 wherein said interleaving means comprises bit interleaving circuitry.

7. The multiplexer of claim 4 wherein said interleaving means comprises byte interleaving means.

8. The multiplexer of claim 4 wherein said frames are DTDM frames.

* * * * *

EXHIBIT 2

PATENT APPLICATION SERIAL NO. 118

U.S. DEPARTMENT OF COMMERCE
PATENT AND TRADEMARK OFFICE
FEE RECORD SHEET

[illegible] 11-17-87 11897?
[illegible] 11-17-87 11897?

1 101 340.00 CK
1 102 136.00 CK

PTO-1556
(5/87)

What is claimed is:

~~1. A method for transmitting circuit and packet~~ data in a telecommunications network comprising the steps of:

generating a bit stream comprising a sequence of frames, each of said frames including a transmission overhead field containing frame timing information and an empty payload field, and

filling the payload fields in said frames with data in packetized format from a plurality of sources ~~including circuit or packet sources~~.

2. The method of claim 1 wherein prior to filling said frames with slots from a circuit transmission stream, said slots are converted to said packetized format by placing a header in front of each of said slots.

~~3. A method for generating a bit stream capable~~ of transporting data originating from both circuit transmission and packet sources comprising

generating a bit stream comprising a sequence of frames, each of said frames including a transmission overhead field containing frame timing information and an empty payload field,

packetizing data from a plurality of sources including circuit transmission bit streams or customer premises equipment to produce data packets, and

inserting said packets into said payload fields of said frames.

4. An apparatus for assembling a dynamic time division multiplexing bit stream comprising,

means for generating a train of frames wherein each frame includes a transmission overhead field containing timing information,

means for processing data from a plurality of sources into packet format, and

means for inserting said packets into said ~~frames to form said bit stream.~~

5. An apparatus for assembling a bit stream for transmitting data from a plurality of sources comprising:

means for generating a train of frames, and

a plurality of interfaces, each of said interfaces serving to interface one of said sources with said train of frames, each of said interfaces comprising:

packetizing means for converting data into data packets,

memory means for storing at least one of said packets formed by said packetizing means, and

circuit means for inserting a packet stored in said memory means into an empty one of said frames.

6. The apparatus of claim 5 wherein all of said circuit means are connected in a chain.

7. The apparatus of claim 6 further comprising means whereby frames received by the first circuit means in said chain are passed to each succeeding circuit means in said chain.

8. An apparatus for disassembling a bit stream comprising data packets contained in frames and for routing data contained in said packets to appropriate customer premises equipment, said apparatus comprising:

a plurality of interface units, each of said interface units being adapted to interface said bit stream with an associated unit of customer premises equipment, each of said interface units comprising:

circuit means for receiving each frame in said stream and for determining if each frame contains a data packet including data to be routed to the associated unit of customer premises equipment, and

memory means coupled to said circuit means for storing data packets to be routed to the associated unit of customer premises equipment.

9. The apparatus of claim 8 wherein each of said interface units includes a depacketizer for depacketizing packets stored in said memory means.

10. The apparatus of claim 8 wherein each of said interface units comprises a phase locked loop for regulating the rate at which data is read out of said memory means.

11. A telecommunications network comprising:

a first stage for receiving data from a plurality of sources and for inserting packetized units of said data into empty frames of a bit stream comprising a chain of frames,

a second stage for receiving a plurality of relatively sparsely occupied bit streams having a particular bit rate and comprising chains of frames and for combining said sparsely occupied bit streams into at least one more densely occupied bit stream comprising a chain of frames and having said bit rate, and

a third stage for receiving a plurality of bit streams comprising chains of frames and for utilizing time division multiplexing to combine said bit streams received by said third stage into at least one high speed bit stream.

12. The telecommunications network of claim 11 wherein said frames are DTDM frames.

13. A telecommunications network comprising

a first stage comprising:

assembler means for receiving data from a plurality of sources and for inserting packetized units of said data into empty frames of a bit stream comprising a chain of frames, and

disassembler means for receiving a bit stream comprising a chain of frames and for distributing data from said frames to particular receiving equipment,

a second stage comprising:

multiplexer means for combining a plurality of bit streams having substantially the same bit rate and comprising chains of frames into at least one more densely occupied bit stream at said bit rate, and

demultiplexer means for breaking up a relatively

densely occupied bit stream having said bit rate and comprising a chain of frames into a plurality of less densely occupied bit streams comprising chains of frames and having said bit rate, and

a third stage comprising a time division multiplexer for time division multiplexing a plurality of bit streams comprising chains of frames to form a high speed bit stream and a time division demultiplexer for breaking up a high speed bit stream into a plurality of bit streams comprising chains of frames.

EXHIBIT 3

UNITED STATES DEPARTMENT OF COMMERCE
Patent and Trademark Office
Address COMMISSIONER OF PATENTS AND TRADEMARKS
Washington, D.C. 20231

SERIAL NUMBER	FILING DATE	FIRST NAMED APPLICANT	ATTORNEY DOCKET NO.
07/118,977	11/10/87	CHAO	H

JAMES W. FALK
BELL COMMUNICATIONS RESEARCH, INC.
290 WEST MOUNT PLEASANT AVENUE
LIVINGSTON, NJ 07039

EXAMINER	
CHIN, W	
ART UNIT	PAPER NUMBER
235	3

DATE MAILED: 09/02/88

This is a communication from the examiner in charge of your application.

COMMISSIONER OF PATENTS AND TRADEMARKS

☐ This application has been examined ☐ Responsive to communication filed on _____ ☐ This action is made final.

A shortened statutory period for response to this action is set to expire — month(s), 30 days from the date of this letter.
Failure to respond within the period for response will cause the application to become abandoned. 35 U.S.C. 133

Part I THE FOLLOWING ATTACHMENT(S) ARE PART OF THIS ACTION:

1. ☐ Notice of References Cited by Examiner, PTO-892.
2. ☐ Notice re Patent Drawing, PTO-948.
3. ☐ Notice of Art Cited by Applicant, PTO-1449
4. ☐ Notice of Informal Patent Application, Form PTO-152
5. ☐ Information on How to Effect Drawing Changes, PTO-1474
6. ☐ _____

Part II SUMMARY OF ACTION

1. ☒ Claims 1-13 are pending in the application.

   Of the above, claims _____ are withdrawn from consideration.

2. ☐ Claims _____ have been cancelled.

3. ☐ Claims _____ are allowed.

4. ☐ Claims _____ are rejected.

5. ☐ Claims _____ are objected to.

6. ☒ Claims 1-13 are subject to restriction or election requirement.

7. ☐ This application has been filed with informal drawings which are acceptable for examination purposes until such time as allowable subject matter is indicated.

8. ☐ Allowable subject matter having been indicated, formal drawings are required in response to this Office action.

9. ☐ The corrected or substitute drawings have been received on _____. These drawings are ☐ acceptable; ☐ not acceptable (see explanation).

10. ☐ The ☐ proposed drawing correction and/or the ☐ proposed additional or substitute sheet(s) of drawings, filed on _____. has (have) been ☐ approved by the examiner. ☐ disapproved by the examiner (see explanation).

11. ☐ The proposed drawing correction, filed _____, has been ☐ approved. ☐ disapproved (see explanation). However, the Patent and Trademark Office no longer makes drawing changes. It is now applicant's responsibility to ensure that the drawings are corrected. Corrections MUST be effected in accordance with the instructions set forth on the attached letter "INFORMATION ON HOW TO EFFECT DRAWING CHANGES", PTO-1474.

12. ☐ Acknowledgment is made of the claim for priority under 35 U.S.C. 119. The certified copy has ☐ been received ☐ not been received ☐ been filed in parent application, serial no. _____; filed on _____.

13. ☐ Since this application appears to be in condition for allowance except for formal matters, prosecution as to the merits is closed in accordance with the practice under Ex parte Quayle, 1935 C.D. 11; 453 O.G. 213.

14. ☐ Other

1. Restriction to one of the following inventions is required under 35 U.S.C. 121:

I. Claims 1-10, drawn to packet communications, classified in Class 370, subclass 94.

II. Claims 11-13, drawn to adaptive rate communications, classified in Class 370, subclass 84.

2. The inventions are distinct, each from the other, because of the following reasons:

Inventions I and II are distinct and separate inventions which are unrelated in that invention I is related to the format of the packet message and invention II is to adaptive communication of a sparsely occupied bit streams into a high speed more densely occupied bit stream. Invention I has separated utility such as a packet message format usable in any packet switching system.

3. Because these inventions are distinct for the reasons given above and have acquired a separate status in the art as shown by their different classification, restriction for examination purposes as indicated is proper.

4. Applicant is advised that the response to this requirement to be complete must include an election of the invention to be examined even though the requirement may be traversed.

5. Any inquiry concerning this communication should be directed to Wellington Chin at telephone number 703-557-3374.

W. CHIN:flj
703-557-3374
08-29-88

Douglas W. Olms

DOUGLAS W. OLMS
PRIMARY EXAMINER
GROUP 263

EXHIBIT 4

Manual of PATENT EXAMINING PROCEDURE

Original Eighth Edition, August 2001
Latest Revision October 2005

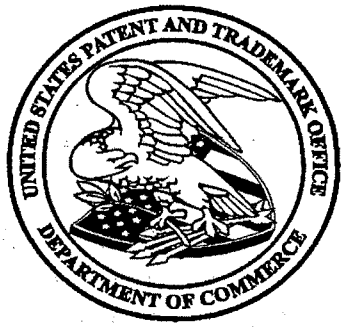

U.S. DEPARTMENT OF COMMERCE
United States Patent and Trademark Office

Rev. 4, October 2005

The U.S. Patent and Trademark Office does not handle the sale of the Manual, distribution of notices and revisions, or change of address of those on the subscription list. Correspondence relating to existing subscriptions should be sent to the Superintendent of Documents at the following address:

Superintendent of Documents
Mail List Section
Washington, DC 20402

Telephone: 202-512-2267

Inquiries relating to purchasing the Manual should be directed to:

Superintendent of Documents
United States Government Printing Office
Washington, DC 20402

Telephone: 202-512-1800

Orders for reproduced copies of individual replacement pages or of previous revisions of the Manual should be sent to the following address:

Mail Stop Document Services
Director of the U.S. Patent and Trademark Office
P.O. Box 1450
Alexandria, VA 22313-1450

Telephone: 1-800-972-6382 or 571-272-3150

Previous editions and revisions of the Manual are available on microfilm in the Patent Search Room.
The Manual is available on CD-ROM and on diskette from:

U.S. Patent and Trademark Office
Office of Electronic Information Products
MDW 4C18, P.O. Box 1450
Alexandria, VA 22313-1450

Telephone: 571-272-5600

Employees of the U.S. Patent and Trademark Office should direct their requests for the Manual, replacement pages, notices, and revisions to the Office of Patent Training.

Telephone: 571-272-7222

Pursuant to the Patent and Trademark Office Efficiency Act (PTOEA) (Pub. L. 106-113, 113 Stat. 1501A-572), the head of the United States Patent and Trademark Office (USPTO) is the "Under Secretary of Commerce for Intellectual Property and Director of the United States Patent and Trademark Office." The Director is assisted by the "Deputy Under Secretary of Commerce for Intellectual Property and Deputy Director of the United States Patent and Trademark Office." The patent operations of the USPTO are now headed by the "Commissioner for Patents." The trademark operations of the USPTO are now headed by the "Commissioner for Trademarks." Under section 4741(b) of the PTOEA, any reference to the Commissioner of Patents and Trademarks, the Assistant Commissioner for Patents, or the Assistant Commissioner for Trademarks is deemed to refer to the Director, the Commissioner for Patents, or the Commissioner for Trademarks, respectively. See "Reestablishment of the Patent and Trademark Office as the United States Patent and Trademark Office" published in the *Federal Register* at 65 FR 17858 (Apr. 5, 2000), and in the *Official Gazette of the United States Patent and Trademark Office* at 1234 O.G. 41 (May 9, 2000).

Additions to the text of the Manual are indicated by arrows (>><) inserted in the text. Deletions are indicated by a single asterisk (*) where a single word was deleted and by two asterisks (**) where more than one word was deleted. The use of three or five asterisks in the body of the laws, rules, treaties, and administrative instructions indicates a portion of the law, rule, treaty, or administrative instruction which was not reproduced.

First Edition, November 1949
Second Edition, November 1953
Third Edition, November 1961
Fourth Edition, June 1979
Fifth Edition, August 1983
Sixth Edition, January 1995
Seventh Edition, July 1998
Eighth Edition, August 2001
Revision 1, February 2003
Revision 2, May 2004
Revision 3, August 2005
Revision 4, October 2005

Chapter 800 Restriction in Applications Filed Under 35 U.S.C. 111; Double Patenting

801 Introduction

802 Basis for Practice in Statute and Rules

802.01 Meaning of "Independent" and "Distinct"

802.02 Definition of Restriction

803 Restriction — When Proper

803.01 Review by Examiner With at Least Partial Signatory Authority

803.02 * Markush Claims

803.03 * Transitional Applications

803.03(a) Transitional Application — Linking Claim Allowable

803.03(b) Transitional Application — Generic Claim Allowable

803.04 * Nucleotide Sequences

804 Definition of Double Patenting

804.01 Prohibition of Double Patenting Rejections Under 35 U.S.C. 121

804.02 Avoiding a Double Patenting Rejection

804.03 ** Commonly Owned *>Inventions< of Different Inventive Entities>; Non-Commonly Owned *>Inventions< Subject to a Joint Research Agreement<

804.04 Submission to Technology Center Director

805 Effect of Improper Joinder in Patent

806 Determination of Distinctness or Independence of Claimed Inventions

806.01 Compare Claimed Subject Matter

**

806.03 Single Embodiment, Claims Defining Same Essential Features

806.04 **>Genus and/or Species< Inventions

**

806.04(b) Species May Be >Independent or< Related Inventions

**

806.04(d) Definition of a Generic Claim

806.04(e) Claims * >Limited< to Species

806.04(f) **>Restriction Between< Mutually Exclusive *>Species<

806.04(h) Species Must Be Patentably Distinct From Each Other

806.04(i) Generic Claims Presented ** After Issue of Species

806.05 Related Inventions

806.05(a) Combination and Subcombination **

**

806.05(c) Criteria of Distinctness *>Between< Combination *>and< Subcombination **

806.05(d) Subcombinations Usable Together

806.05(e) Process and Apparatus for Its Practice *

806.05(f) Process of Making and Product Made *

806.05(g) Apparatus and Product Made *

806.05(h) Product and Process of Using

806.05(i) Product, Process of Making, and Process of Using **

>806.05(j) Related Products; Related Processes

806.06 Independent Inventions<

807 Patentability Report Practice Has No Effect on Restriction Practice

808 Reasons for Insisting Upon Restriction

808.01 **>Reasons for Holding of Independence or Distinctness<

808.01(a) Species

808.02 **>Establishing Burden<

809 * Linking **>Claims<

**

809.02(a) Election >of Species< Required

**

809.03 **>Restriction Between Linked Inventions<

**

810 Action on the Merits

**

811 Time for Making Requirement

811.02 *>New Requirement< After Compliance With Preceding Requirement

811.03 Repeating After Withdrawal Proper

811.04 Proper Even Though Grouped Together in Parent Application

812 Who Should Make the Requirement

812.01 Telephone Restriction Practice

814 Indicate Exactly How Application Is To Be Restricted

815 Make Requirement Complete

**

817 Outline of Letter for Restriction Requirement

**

818 Election and Reply

818.01 Election Fixed by Action on Claims

818.02 Election Other Than Express

818.02(a) By Originally Presented Claims

818.02(b) Generic Claims Only — No Election of Species

818.02(c) By Optional Cancellation of Claims

818.03 Express Election and Traverse

818.03(a) Reply Must Be Complete

818.03(b) Must Elect, Even When Requirement Is Traversed

818.03(c) Must Traverse To Preserve Right of Petition

818.03(d) Traverse of **>Restriction Requirement With< Linking Claims

**

819 Office Generally Does Not Permit Shift

**

821 Treatment of Claims Held To Be Drawn to Non-elected Inventions
821.01 After Election With Traverse
821.02 After Election Without Traverse
821.03 Claims for Different Invention Added After an Office Action
821.04 Rejoinder
>821.04(a) Rejoinder Between Product Inventions; Rejoinder Between Process Inventions
821.04(b) Rejoinder of Process Requiring an Allowable Product<
822 Claims to Inventions That Are Not Distinct in Plural Applications of Same Inventive Entity
822.01 Copending Before the Examiner
823 Unity of Invention Under the Patent Cooperation Treaty

801 Introduction

This chapter is limited to a discussion of the subject of restriction and double patenting under Title 35 of the United States Code and Title 37 of the Code of Federal Regulations as it relates to national applications filed under 35 U.S.C. 111(a). The discussion of unity of invention under the Patent Cooperation Treaty Articles and Rules as it is applied as an International Searching Authority, International Preliminary Examining Authority, and in applications entering the National Stage under 35 U.S.C. 371 as a Designated or Elected Office in the U.S. Patent and Trademark Office is covered in Chapter 1800.

802 Basis for Practice in Statute and Rules

The basis for restriction and double patenting practices is found in the following statute and rules:

35 U.S.C. 121. Divisional applications.

If two or more independent and distinct inventions are claimed in one application, the Director may require the application to be restricted to one of the inventions. If the other invention is made the subject of a divisional application which complies with the requirements of section 120 of this title it shall be entitled to the benefit of the filing date of the original application. A patent issuing on an application with respect to which a requirement for restriction under this section has been made, or on an application filed as a result of such a requirement, shall not be used as a reference either in the Patent and Trademark Office or in the courts against a divisional application or against the original application or any patent issued on either of them, if the divisional application is filed before the issuance of the patent on the other application. If a divisional application is directed solely to subject matter described and claimed in the original application as filed, the Director may dispense with signing and execution by the inventor. The validity of a patent shall not be questioned for failure of the Director to require the application to be restricted to one invention.

37 CFR 1.141. Different inventions in one national application.

(a) Two or more independent and distinct inventions may not be claimed in one national application, except that more than one species of an invention, not to exceed a reasonable number, may be specifically claimed in different claims in one national application, provided the application also includes an allowable claim generic to all the claimed species and all the claims to species in excess of one are written in dependent form (§ 1.75) or otherwise include all the limitations of the generic claim.

(b) Where claims to all three categories, product, process of making, and process of use, are included in a national application, a three way requirement for restriction can only be made where the process of making is distinct from the product. If the process of making and the product are not distinct, the process of using may be joined with the claims directed to the product and the process of making the product even though a showing of distinctness between the product and process of using the product can be made.

37 CFR 1.142. Requirement for restriction.

(a) If two or more independent and distinct inventions are claimed in a single application, the examiner in an Office action will require the applicant in the reply to that action to elect an invention to which the claims will be restricted, this official action being called a requirement for restriction (also known as a requirement for division). Such requirement will normally be made before any action on the merits; however, it may be made at any time before final action.

(b) Claims to the invention or inventions not elected, if not canceled, are nevertheless withdrawn from further consideration by the examiner by the election, subject however to reinstatement in the event the requirement for restriction is withdrawn or overruled.

The pertinent Patent Cooperation Treaty (PCT) Articles and Rules are cited and discussed in Chapter 1800. Sections 1850, 1875, and 1893.03(d) should be consulted for discussions on unity of invention:

(A) before the International Searching Authority;

(B) before the International Preliminary Examining Authority; and

(C) in the National Stage under 35 U.S.C. 371.

802.01 Meaning of "Independent" and "Distinct" [R-3]

35 U.S.C. 121 quoted in the preceding section states that the *>Director< may require restriction if two or more "independent and distinct" inventions are

claimed in one application. In 37 CFR 1.141, the statement is made that two or more "independent and distinct inventions" may not be claimed in one application.

This raises the question of the *>inventions< as between which the *>Director< may require restriction. This, in turn, depends on the construction of the expression "independent and distinct" inventions.

"Independent", of course, means not dependent. If "distinct" means the same thing, then its use in the statute and in the rule is redundant. If "distinct" means something different, then the question arises as to what the difference in meaning between these two words may be. The hearings before the committees of Congress considering the codification of the patent laws indicate that 35 U.S.C. 121: "enacts as law existing practice with respect to division, at the same time introducing a number of changes."

The report on the hearings does not mention as a change that is introduced, the *>inventions< between which the *>Director< may properly require division.

The term "independent" as already pointed out, means not dependent. A large number of *>inventions< between which, prior to the 1952 Act, division had been proper, are dependent *>inventions<, such as, for example, combination and a subcombination thereof; as process and apparatus used in the practice of the process; as composition and the process in which the composition is used; as process and the product made by such process, etc. If section 121 of the 1952 Act were intended to direct the *>Director< never to approve division between dependent inventions, the word "independent" would clearly have been used alone. If the *>Director< has authority or discretion to restrict independent inventions only, then restriction would be improper as between dependent inventions, e.g., the examples used for purpose of illustration above. Such was clearly not the intent of Congress. Nothing in the language of the statute and nothing in the hearings of the committees indicate any intent to change the substantive law on this subject. On the contrary, joinder of the term "distinct" with the term "independent", indicates lack of such intent. The law has long been established that dependent inventions (frequently termed related inventions) such as used for illustration above may be properly divided if they are, in fact, "distinct" inventions, even though dependent.

>

I. < INDEPENDENT

The term "independent" (i.e., not dependent) means that there is no disclosed relationship between the two or more **>inventions claimed<, that is, they are unconnected in design, operation, *>and< effect*>. For< example **>, a< process and >an< apparatus incapable of being used in practicing the process* >are independent inventions. See also MPEP § 806.06 and § 808.01.

II. < DISTINCT

**>Two or more inventions are related (i.e., not independent) if they are disclosed as connected in at least one of design (e.g., structure or method of manufacture), operation (e.g., function or method of use), or effect. Examples of related inventions include< combination and part (subcombination) thereof, process and apparatus for its practice, process and product made, etc. **>In< this definition the term related is used as an alternative for dependent in referring to *>inventions< other than independent *>inventions<.

>Related inventions are distinct if the inventions *as claimed* are not connected in at least one of design, operation, or effect (e.g., can be made by, or used in, a materially different process) and wherein at least one invention is PATENTABLE (novel and nonobvious) OVER THE OTHER (though they may each be unpatentable over the prior art). See MPEP § 806.05(c) (combination and subcombination) and § 806.05(j) (related products or related processes) for examples of when a two-way test is required for distinctness.<

It is further noted that the terms "independent" and "distinct" are used in decisions with varying meanings. All decisions should be read carefully to determine the meaning intended.

802.02 Definition of Restriction [R-3]

Restriction **>is< the practice of requiring an **>applicant to elect a single claimed invention (e.g., a combination or subcombination invention, a product or process invention, a species within a genus) for examination when two or more independent inventions and/or two or more distinct inventions are claimed in an application.<

803 Restriction — When Proper [R-3]

Under the statute>, the claims of< an application may properly be required to be restricted to one of two or more claimed inventions only if they are able to support separate patents and they are either independent (MPEP § **>802.01, § 806.06, and § 808.01<) or distinct (MPEP § 806.05 - § *>806.05(j)<).

If the search and examination of **>all the claims in an< application can be made without serious burden, the examiner must examine *>them< on the merits, even though **>they include< claims to independent or distinct inventions.

>

I. < CRITERIA FOR RESTRICTION BETWEEN PATENTABLY DISTINCT INVENTIONS

There are two criteria for a proper requirement for restriction between patentably distinct inventions:

(A) The inventions must be independent (see MPEP § 802.01, § *>806.06<, § 808.01) or distinct as claimed (see MPEP § 806.05 - § *>806.05(j)<); and

(B) There *>would< be a serious burden on the examiner if restriction is >not< required (see MPEP § 803.02, **>§ 808<, and § 808.02).

>

II. < GUIDELINES

Examiners must provide reasons and/or examples to support conclusions, but need not cite documents to support the restriction requirement in most cases.

Where plural inventions are capable of being viewed as related in two ways, both applicable criteria for distinctness must be demonstrated to support a restriction requirement.

If there is an express admission that the claimed inventions *>would have been< obvious over each other within the meaning of 35 U.S.C. 103, restriction should not be required. *In re Lee,* 199 USPQ 108 (Comm'r Pat. 1978).

For purposes of the initial requirement, a serious burden on the examiner may be *prima facie* shown ** by appropriate explanation of separate classification, or separate status in the art, or a different field of search as defined in MPEP § 808.02. That *prima facie* showing may be rebutted by appropriate showings or evidence by the applicant. Insofar as the criteria for restriction practice relating to Markush-type claims is concerned, the criteria is set forth in MPEP § 803.02. Insofar as the criteria for restriction or election practice relating to claims to genus-species, see MPEP § *>806.04< - § 806.04(i) and § 808.01(a).

803.01 Review by Examiner with at Least Partial Signatory Authority [R-3]

Since requirements for restriction under 35 U.S.C. 121 are discretionary with the *>Director<, it becomes very important that the practice under this section be carefully administered. Notwithstanding the fact that this section of the statute apparently protects the applicant against the dangers that previously might have resulted from compliance with an improper requirement for restriction, IT STILL REMAINS IMPORTANT FROM THE STANDPOINT OF THE PUBLIC INTEREST THAT NO REQUIREMENTS BE MADE WHICH MIGHT RESULT IN THE ISSUANCE OF TWO PATENTS FOR THE SAME INVENTION. Therefore, to guard against this possibility, only an examiner with permanent >full signatory authority< or temporary full signatory authority may sign final ** Office actions containing a final requirement for restriction**>. An< examiner with permanent >partial signatory authority< or temporary partial signatory authority may sign non-final Office actions containing a final requirement for restriction.

803.02 * Markush Claims [R-3]

**>A Markush-type claim recites alternatives in a format such as "selected from the group consisting of A, B and C." See *Ex parte Markush*, 1925 C.D. 126 (Comm'r Pat. 1925). The members of the Markush group (A, B, and C in the example above) ordinarily must belong to a recognized physical or chemical class or to an art-recognized class. However, when the Markush group occurs in a claim reciting a process or a combination (not a single compound), it is sufficient if the members of the group are disclosed in the specification to possess at least one property in common which is mainly responsible for their function in the

EXHIBIT 5

MAIL ROOM
OCT 6
U.S. PATENT AND TRADEMARK OFFICE

IN THE UNITED STATES
PATENT AND TRADEMARK OFFICE

RECEIVED
OCT 05 1988
GROUP 260

Hung-Hsiang J. Chao
Sang H. Lee
Liang T. Wu

Case 1-3-2

Serial No. 118,977 Filed November 10, 1987

Group Art Unit 263

Examiner W. Chin

Title Dynamic Time Division Multiplexing

THE COMMISSIONER OF PATENTS AND TRADEMARKS
WASHINGTON, D. C. 20231

SIR:

Remarks

In the Office action of September 2, 1988, (application paper No. 2), the Examiner subjected claims 1-13 to a restriction requirement. In particular, the Examiner stated claims 1-10 encompass Invention I and claims 11-13 encompass Invention II. Further, the Examiner stated Invention I is drawn to packet communications, classified in Class 370, subclass 94, and Invention II is drawn to adaptive rate communications, classified in Class 370, subclass 84.

The Examiner supported the restriction requirement by stating Inventions I and II are distinct and separate inventions which are unrelated for the following reason: Invention I is related to the format of the packet message and Invention II is related to adaptive communications of sparsely occupied bit streams into a high speed more densely occupied bit stream. By way of example, the Examiner indicated that Invention I has "separated utility such as a packet message format usable in any packet switching system".

After careful consideration of the relative merit of the Examiner's position, Applicants' traverse the restriction requirement on the basis that all claims encompass a single disclosed embodiment of the inventive subject matter. As disclosed and claimed by the Applicants, Applicants' invention relates to a data transmission technique known as Dynamic Time Division Multiplexing (DTDM). Specifically, Applicants' inventive subject matter comprises a DTDM technique for transmitting circuit and packet data in a telecommunications network. Applicants' claimed subject matter accomplishes the transmission of different data types, each potentially transmitted at a different rate, by generating trains of empty frames and inserting packetized data types into the empty frames. Thus, the train of empty frames is filled with data packets from various sources having these different transmission speeds. Therefore, it is not required that transmission speeds be resolved to a given rate, but instead all sources can transmit data at their own bit rate.

All claims of the present invention relate to communications multiplexing and are basically different recitations setting forth various aspects of the single invention. For example, claim 1 recites the generation of a sequence of frames and the filling of the frames with packetized data. Claim 11 recites inserting packetized data into empty frames of a bit stream comprising a chain of frames. From the discussion above, the rate of the packet communications is the rate of the generated chain of frames. These claims differ only in matter of degree and the scope of the subject matter recited. Similar statements may be made about the relationship between and among the various remaining claims.

Since election is required even though the restriction requirement is traversed, the Applicants select for examination of Invention I claims 1-10.

It is respectfully requested that the Examiner reconsider the restriction requirement in view of the foregoing reasons presented by the Applicants.

Respectfully submitted,

Hung-Hsiang Chao
Sang H. Lee
Liang T. Wu

By _____
James W. Falk, Attorney
Reg. No. 16154
201-740-6100

Bell Communications Research, Inc.

Date: SEP 2 9 1988