IN THE UNITED STATES DISTRICT COURT
FOR THE DISTRICT OF DELAWARE

TELCORDIA TECHNOLOGIES, INC., Plaintiff/Counterclaim Defendant, v. LUCENT TECHNOLOGIES, INC., Defendant/Counterclaim Plaintiff.	)	C.A. No. 04-875-GMS
TELCORDIA TECHNOLOGIES, INC., Plaintiff/Counterclaim Defendant, v. CISCO SYSTEMS, INC., Defendant/Counterclaim Plaintiff.	)	C.A. No. 04-876-GMS

LUCENT AND CISCO'S ANSWERING CLAIM CONSTRUCTION BRIEF ON UNITED STATES PATENT NOS. 4,893,306, 4,835,763, AND RE 36,633

YOUNG CONAWAY STARGATT & TAYLOR, LLP
John W. Shaw (I.D. #3362)
Monte T. Squire (I.D. #4764)
The Brandywine Building
1000 West Street
Wilmington, DE 19801
Telephone: (302) 571-6600
Facsimile: (302) 576-3334
jshaw@ycst.com
msquire@ycst.com

Attorneys for Defendant Lucent Technologies Inc.

MORRIS, NICHOLS, ARSHT & TUNNELL LLP
Jack B. Blumenfeld (I.D. #1014)
Leslie A. Polizoti (I.D. #4299)
1201 North Market Street
1201 North Market Street
Wilmington, DE 19899-1347
Telephone: (302) 658-9200
Facsimile: (302) 658-3989
jblumenfeld@mnat.com
lpolizoti@mnat.com

Attorneys for Defendant Cisco Systems, Inc.

OF COUNSEL:

Steven C. Cherny
LATHAM & WATKINS LLP
885 Third Avenue, Suite 1000
New York, NY 10022
Telephone: (212) 906-1200
Facsimile: (212) 571-4864

David A. Nelson
Israel Sasha Mayergoyz.
David C. McKone
LATHAM & WATKINS LLP
Sears Tower, Suite 5800
Chicago, IL 60606
Telephone: (312) 876-7700
Facsimile: (312) 993-9767

OF COUNSEL:

Matthew D. Powers
Edward R. Reines
Jessica L. Davis
Sonal N. Mehta
Thomas B. King
WEIL, GOTSHAL & MANGES LLP
201 Redwood Shores Parkway
Redwood Shores, CA 94065
Telephone: (650) 802-3000
Facsimile: (650) 802-3100

Ryan Owens
WEIL, GOTSHAL & MAGES, LLP
767 Fifth Avenue
New York, NY 10153
Telephone: (212) 310-8000
Facsimile: (212) 310-8007

March 24, 2006

TABLE OF CONTENTS

Page

TABLE OF CITATIONS ii
INTRODUCTION 4
A. THE '306 PATENT 4
1. "plurality of sources which have access to the bit stream" 5
2. "filling" and "inserting" terms 12
3. "such that data in packetized format from any of said sources is written into any available empty payload field of any of said frames" 17
4. "available empty payload field"/"empty payload field of any of said frames available to said inserting means" 21
B. THE '763 PATENT 22
1. "a communications network having a plurality of nodes interconnected in a ring configuration" 22
2. "multiplexed subrate communications" and "evaluating the integrity of the multiplexed subrate communications" 24
3. "associated with [both] the first ring and the second ring" 25
4. "inserting an error signal on designated ones of [the] subrate communications" 26
5. "monitoring means" 27
C. THE '633 PATENT 32
1. "transmitting . . . an RTS" 32
2. "transmitting means"/"means for transmitting"/"receiving means"/ "counting means"/"converting means" 34
3. "residual time stamp (RTS)" 34
4. "2p counts uniquely and unambiguously represent the range of possible network clock cycles within an RTS period" 35
5. "at the end of the RTS period" 35
6. "network clock"/"derived network clock"/"derived network clock frequency f_{nx}" 36
7. "network clock cycles"/"counting [the] network clock cycles" 38
8. "means, at the source node, for defining a derived network clock frequency fnx from a network frequency fn where fnx =fn/x, x is a rational number, and fnx is less than or equal to twice the service clock frequency" 39
CONCLUSION 40

TABLE OF CITATIONS

Cases

ACCO Brands, Inc. v. Micro Security Devices, Inc.,
346 F.3d 1075 (Fed. Cir. 2003) 8, 11, 12

ASM America, Inc. v. Genus, Inc.,
260 F. Supp. 2d 827 (N.D. Cal. 2002) 30

Atmel Corp. v. Information Storage Devices,
198 F.3d 1374 (Fed. Cir. 1999) 29

Bellcore v. Fore Sys., Inc.,
62 Fed. Appx. 951 (Fed. Cir. 2003) ..... passim

Bellcore, Inc. v. Fore Sys., Inc.,
113 F. Supp. 2d 635 (D. Del. 2000) 17, 18, 20

Bicon, Inc. v. The Straumann Co.,
-- F.3d --, No. 05-1168 WL 688797 (Fed. Cir. Mar. 20, 2006) 21

Biogen Inc. v. Berlex Labs., Inc.,
318 F.3d 1132 (Fed. Cir. 2003) 16

Callicrate v. Wadsworth Mfg., Inc.,
427 F.3d 1361 (Fed. Cir. 2005) 27

Default Proof Credit Card System, Inc. v. Home Depot U.S.A., Inc.,
412 F.3d 1291 (Fed. Cir. 2005) 29, 30, 31

K-2 Corp. v. Salomon S.A.,
191 F.3d 1356 (Fed. Cir. 1999) 36

Merck & Co. v. Teva Pharms. USA, Inc.,
395 F.3d 1364 (Fed. Cir. 2005) 22

Moleculon Research Corp. v. CBS, Inc.,
793 F.2d 1261 (Fed. Cir. 1986) 29

Multiform Desiccants, Inc. v. Medzam, Ltd.,
133 F.3d 1473 (Fed. Cir. 1998) 16

Nystrom v. Trex Co.,
424 F.3d 1136 (Fed. Cir. 2005) 26, 27

Pause Tech., LLC v. TiVo, Inc.
419 F.3d 1326 (Fed. Cir. 2005) 21

Phillips v. AWH Corp.,
415 F.3d 1303 (Fed. Cir. 2005) 16, 25, 33

Pitney Bowes, Inc. v. Hewlett-Packard Co.,
182 F.3d 1298 (Fed. Cir. 1999) 8

Signtech USA, Ltd v. Vutek, Inc.,
174 F.3d 1352 (Fed. Cir. 1999) 28

Union Carbide Chem. & Plastics Tech. Corp. v. Shell Oil Co.,
425 F.3d 1366 (Fed. Cir. 2005) 29

Vitronics Corp. v. Conceptronic, Inc.,
90 F.3d 1576 (Fed. Cir. 1996) 22, 26

Other Authorities

Manual of Patent Examining Procedure ("MPEP")..... 7

INTRODUCTION

Lucent Technologies, Inc. ("Lucent") and Cisco Systems, Inc. ("Cisco") submit this answering brief in response to the claim construction brief submitted by Telcordia Technologies, Inc. ("Telcordia") on March 3, 2006. In this brief, Defendants Lucent and Cisco jointly address the disputed terms of the three patents Telcordia is asserting against them: U.S. Patent Nos. 4,893,306, 4,835,763, and RE 36,633.

A. THE '306 PATENT

Telcordia's proposed constructions for the disputed terms of the '306 patent suffer from a number of fundamental errors.

- Telcordia ignores the Federal Circuit's opinion in the *Fore* litigation by relegating its discussion of that opinion to a mere footnote. Telcordia's reason for doing so is simple: The Federal Circuit's opinion is inconsistent with Telcordia's proposed constructions.
- Telcordia ignores or attempts to rewrite Judge Farnan's claim constructions.
- Telcordia stretches the asserted claims to cover embodiments that it abandoned after the Patent Office issued a restriction requirement. Moreover, the embodiments to which Telcordia cites are the subject of a related, unasserted patent filed on the same day as the application that issued as the '306 patent.
- Telcordia ignores the claim language in the asserted claims, as well as the specification's unambiguous description of the claimed invention. For example, Telcordia's construction of the term "available empty payload field" impermissibly eliminates the word "available" from the claim.

1. "plurality of sources which have access to the bit stream"

As explained in Lucent's opening brief, one question forms the dispute between the parties on this term: must each of the "plurality of sources with access to the bit stream" insert its packetized data into the bit stream via its own tributary, as described throughout the patent (Defendants' construction), ***or*** can the claims be stretched to cover a system in which the source data ultimately reaches the bit stream ***regardless of whether the sources themselves each "access" the bit stream*** (Telcordia's construction)?

Telcordia does not dispute that Defendants' construction is supported by the claim text which requires that each of the plurality of sources have "access" to the bit stream. Instead, Telcordia's primary argument against Defendants' proposed construction is that the embodiment in Figure 3 (including Figures 7 and 10) allegedly shows a "preferred embodiment" that would be excluded by Defendants' construction. Telcordia Br. at 11-12. Telcordia's argument is fundamentally flawed.

It is undisputed that Figure 3 of the '306 patent depicts an embodiment that includes the claimed invention. Figure 3 depicts data from three data sources entering an assembler via their own tributaries and leaving that assembler in a single bit stream:

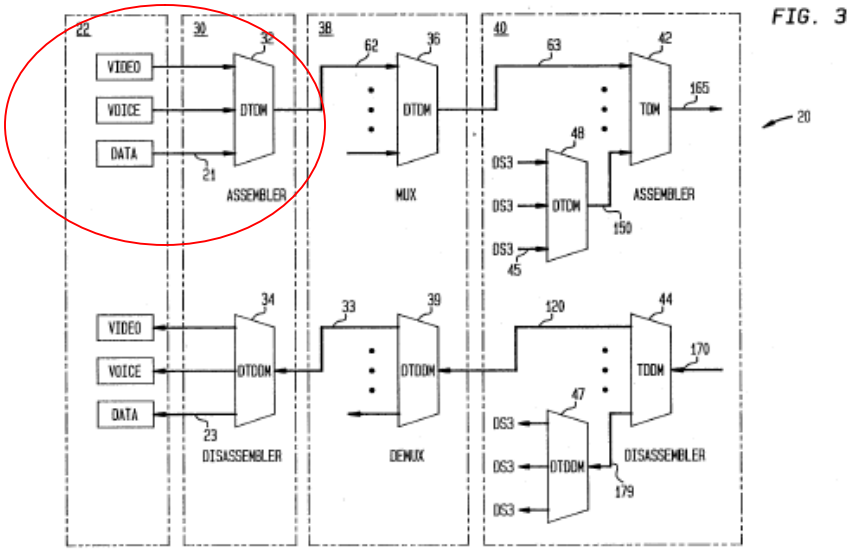

Specifically, in the upper left corner of Figure 3 (highlighted above), data from three different sources (video, voice and data) enter, via their own tributaries, the assembler 32. The structures within the assembler generate frames and fill them with packets, and data is then transmitted out of the assembler via bit stream 62. Telcordia does not dispute this. *See* Telcordia Br. at 12 & n.4 (noting that Defendants' construction is directed at "bit stream 62 [that is] formed by framers 52 in Fig. 4 (which details the assembler 32 of Fig. 3)").

Instead, Telcordia argues that Defendants' proposed construction is "in direct conflict with the invention claimed in the '306 patent because it implies that packets from sources have no access to the downstream framers 92 (Fig. 7) and 160 (Fig. 10)." Telcordia's argument is both legally and factually incorrect.

Notwithstanding Telcordia's argument to the contrary, Defendants' proposed construction ***embraces*** – not excludes – Figure 3 of the '306 patent. As shown above, the plurality of sources (video, voice and data) each access the bit stream 62 via the assembler 32. *See also* Fig. 2 (showing data from different sources entering the assembler and being transmitted via a bit stream). Telcordia neglects to tell the Court that Figure 3 is composed of

two inventions: (1) the invention claimed in the '306 patent, and (2) a distinct and separate invention that the Patent Office required Telcordia to drop from the application that issued as the '306 patent and Telcordia pursued in a separate unasserted patent. The mere fact that Figure 3 depicts something ***more*** than what is claimed in the asserted claims does not mean that it does not embody those claims, nor does it mean that the asserted claims must cover everything shown in that figure.

Figure 3 shows the claimed invention where the sources individually access and populate a bit stream with data ***and*** a different invention where, downstream, already populated bit streams are merged to create a more densely populated bit stream. The '306 patent and the asserted claims are explicitly directed to the first invention. The Patent Office held that the second invention was a distinct and separate invention that could not be claimed in the application that issued as the '306 patent.

Telcordia's suggestion that the asserted claims of the '306 patent require that packets from the plurality of sources have "access to the downstream framers 92 (Fig. 7) and 160 (Fig. 10)" is directly at odds with the prosecution history. During the prosecution of the application that issued as the '306 patent, the claims directed to the downstream structures depicted in Figures 7 and 10 were found by the Patent Office to be a distinct and separate invention from that claimed. As a result, Telcordia was forced to drop claims directed to the "downstream" embodiments depicted in Figures 7 and 10. As explained in more detail below, the claims that remained in the application that issued as the '306 patent cover the embodiments disclosed in, among others, Figure 2 and the portion of Figure 3 showing data from three different sources entering assembler 32 and being transmitted out of the assembler via bit stream 62. The claims directed to the downstream structures shown in Figures 7 and 10 were prosecuted in another

patent application and those claims issued in unasserted U.S. Patent No. 4,833,673 ("the '673 patent") (Ex. 1).[1] It is thus unsurprising and unexceptional that the claims of the '306 patent ***do not*** cover the downstream structures shown in Figures 7 and 10, and those figures cannot be used to expand the scope of the claims of the '306 patent beyond the invention actually claimed and described throughout the specification.

Despite being forced to forgo claims to the downstream framers shown in Figures 7 and 10 in what became the '306 patent, Telcordia now seeks to broaden the claims of the '306 patent to include exactly that embodiment. The Federal Circuit consistently has held that claims are not construed to cover embodiments pursued in related patent applications. For example, in *ACCO Brands, Inc. v. Micro Security Devices, Inc.*, 346 F.3d 1075, 1079 (Fed. Cir. 2003), the patentee argued for a broad construction because it believed the claims should be construed to cover all the embodiments disclosed in the patent. The Federal Circuit refused, however, to do so because claims directed to some of the embodiments had been pursued in related patent applications, and were not the subject of the patent and the claims to be construed in that case. Specifically, the Federal Circuit explained that the presence in the "specification of embodiments carried over from the parent application, but claimed in other patents, ***does not serve to broaden the scope of the . . . claims that were the subject of the divisional application***."[2] *Id.*; *see also Pitney Bowes, Inc. v. Hewlett-Packard Co.*, 182 F.3d 1298, 1310-11 (Fed. Cir. 1999) ("[T]he '272, '157, and '757 patents all stemmed from the same parent application, or a divisional or continuation application thereof. ***Thus, it is perhaps unsurprising that their written descriptions are***

---

[1] This exhibit and the cited exhibits that follow are attached to the Declaration of Leslie A. Polizoti, Esq. In Support Of Lucent and Cisco's Answering Claim Construction Brief On United States Patent Nos. 4,893,306, 4,835,763, and RE 36,633, filed concurrently herewith.

[2] Emphasis added throughout.

apparently identical and, consequently, not relevant in toto to all three inventions."). That is precisely the case here.

The application leading to the '306 patent as originally filed included two independent sets of claims: (1) a first set (that matured into the asserted claims of the '306 patent) directed to a system in which each of the different sources inserts packetized data into the bit stream via their separate tributaries, and (2) a second set (which relates to the claimed subject matter of the unasserted '673 patent) directed to downstream stages where multiple populated bit streams are multiplexed together to form a more densely populated bit stream. *Compare* Claim 1 and Claim 11 of the application as originally filed at 31, 33 (Ex. 2) (claiming in claim 11 a "second stage" and "third stage" where a plurality of bit streams are "combined"). As the PTO examiner made clear when he required Telcordia to drop the claims directed to the downstream invention, "Claim 11 does not only recite inserting packetized data into empty frames, but also, more importantly, it recites the receiving of sparsely occupied bit streams, ***combining*** them into more densely occupied bit streams, and multiplexing the densely occupied bit streams to generate a high speed bit stream." Office Action dated Sept. 2, 1988, at 2 (Ex. 3). The PTO thus determined that the two sets of claims were directed to two distinct and separate inventions:

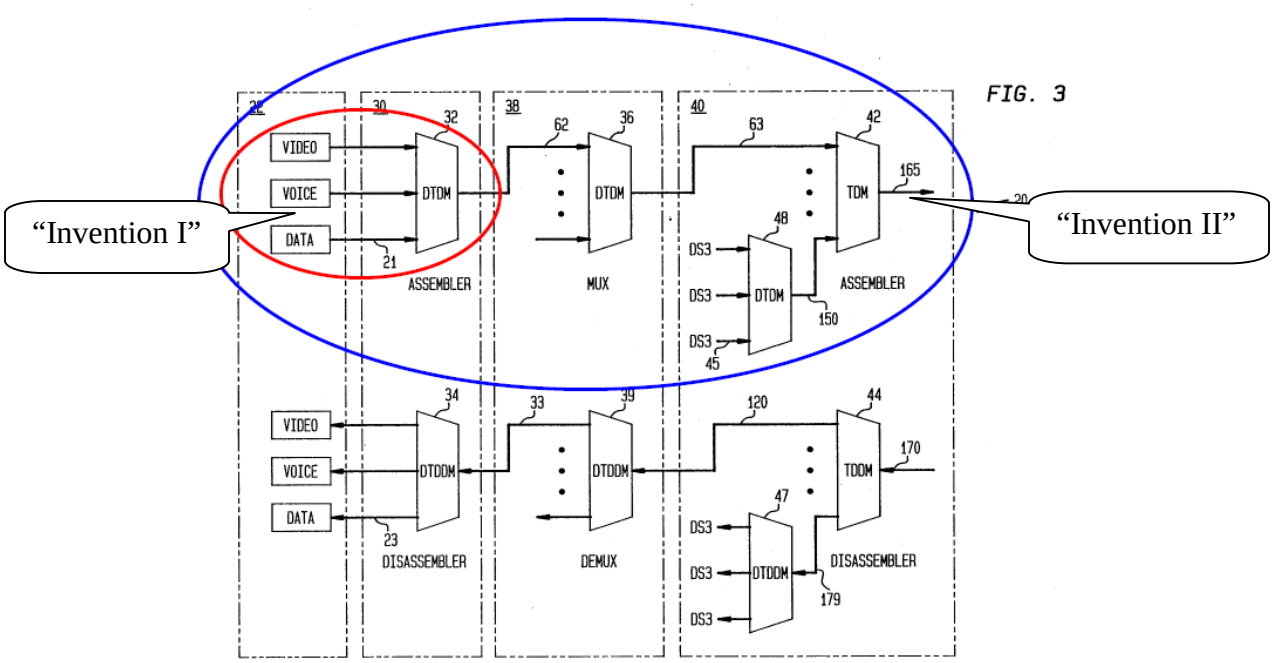

See Figure 3. The two inventions are disclosed in Figure 3.[3]

Because the '306 patent application included claims directed to both of these distinct inventions, the PTO required the patentees to drop the second set of claims directed to Invention II from the application pursuant to a restriction requirement.[4] Office Action dated Sept. 2, 1988, at 2 (Ex. 3). After initially objecting to the PTO's requirement, the patentees finally acceded and elected to drop the second set of claims directed to combining multiple bit streams (Invention II).

---

[3] In particular, in describing Figure 3, the specification explains that "the multiplexer 36 . . . is used to combine several DTDM bit streams arriving on lines 62 into a more densely occupied DTDM bit stream." 8:11-16. Likewise, "FIG. 7 schematically illustrates an alternative DTDM bit stream multiplexer for combining a plurality of relatively sparsely occupied DTDM bit streams into a smaller number of more densely populated DTDM bit streams." 11:65-12:1. And, in the same vein, Figure 10 illustrates "[a] time division multiplexer 42 (see FIG. 3) for multiplexing a plurality of DTDM bit streams." 14:49-51. These are all features of Invention II.

[4] The Manual of Patent Examining Procedure ("MPEP") defines a restriction requirement as follows:

"803 Restriction — When Proper [R-3]

> Under the statute, the claims of an application may properly be required to be restricted to one of two or more claimed inventions only if they are able to support separate patents and they are either independent or distinct.

MPEP, § 803 (8th Ed., Rev. 4, October 2005) (citations omitted) (Ex. 4).

Response dated Oct. 5, 1988, at 2 (Ex. 5). By doing so, the patentees acknowledged that the claims of the '306 patent are "distinct" from the dropped claims.

The patentees' eventual capitulation is not surprising. Although Invention II was restricted out of the '306 patent, the patentees did not lose their rights to that invention. On the same day the patentees filed the application that issued as the '306 patent, Bellcore (now Telcordia) filed four other patent applications directed to different inventions with different sets of inventors.[5] Each of these four other applications has the same Figures 3, 7, and 10 that Telcordia now alleges depict a "preferred" embodiment of the asserted claims of the '306 patent. Each of those applications names a different group of inventors and is directed to different inventions. Significantly, one of those simultaneously filed patent applications issued as the '673 patent, which claims the very embodiments upon which Telcordia now relies, showing that Telcordia plainly understood that the downstream functionality corresponds to an entirely different invention than what is claimed in the '306 patent.

Despite being forced to drop the claims directed to Invention II and having pursued a separate patent application (with a different group of inventors) directed at Invention II, Telcordia now relies exclusively on Invention II in an attempt to expand the scope of the claims in the '306 patent which it chose to prosecute (directed to Invention I). Telcordia's reliance on Invention II is squarely at odds with the holding in *ACCO* that "[t]he presence in the . . . specification of embodiments carried over from the parent application, but claimed in other

---

[5] In addition to the application that issued as the '673 patent, the other three applications filed on the same day as the application that issued as the '306 patent are the applications that issued as: U.S. Pat. No. 4,855,999, entitled "DTDM Multiplexer with Cross-Point Switch," which issued to H. Chao, a co-inventor of the '306 patent (Ex. 6); U.S. Pat. No. 4,833,671, entitled "DTDM Multiplexing Circuitry," which issued to M. Beckner, F. Porter, and K. Shu (Ex. 7); and U.S. Pat. No. 4,819,226, entitled "Framer Circuit for Use in a DTDM Network," which issued to M. Beckner, H. Chao, T. Robe, and L. Smoot (Ex. 8).

patents, does not serve to broaden the scope of the . . . claims that were the subject of the divisional application." 346 F.3d at 1079.

Once Telcordia's diversion downstream to Invention II is exposed for what it is, the correctness of Defendants' proposed claim construction is clear: the plurality of sources access the bit stream via their own separate tributaries. Indeed, Telcordia makes no other argument against Defendants' construction, ignoring entirely the claim language, the specification and the Federal Circuit's opinion. *See Bellcore v. Fore Sys., Inc.*, 62 Fed. Appx. 951, 952 (Fed. Cir. 2003) (describing the patented system as having "[s]pecialized 'framer' circuits" then "insert the packets individually into available payload fields of the DTDM bit stream, ***with priority among the data sources determined automatically by the proximity of each data source's framer to the origin of the empty bit stream***."). Each data source has its own framer and the sources access the bit stream at separate points in order to effectuate the '306 patent's described priority scheme. Accordingly, Defendants' proposed construction should be adopted.[6]

2. "filling" and "inserting" terms

Telcordia argues that the patent allows individual frames to include data from multiple different sources.[7] Telcordia Br. at 8-9. In so arguing, Telcordia either misconstrues or ignores

---

[6] Telcordia's argument that the "inserting means" of claim 4 can be a single framer must be rejected for the same reasons. The "inserting means" of claim 4 is directed to the insertion of data from a plurality of sources into a train of frames to form a DTDM bit stream. The corresponding structure for the "inserting means" is a plurality of framers 53. *See* Figure 4. Telcordia, however, argues that claim 4 can be stretched to include embodiments with only one framer. Telcordia's only support for this construction is Figure 10, which Telcordia contends teaches that the "inserting means" may have only one framer circuit. Again, Telcordia's reliance on Figure 10 is improper. As explained above, Figure 10 is directed to the downstream merging of multiple DTDM bit streams (Invention II, which relates to the claimed subject matter of an unasserted patent), ***not*** the insertion of data into a train of frames to form a DTDM bit stream (Invention I, claimed in the '306 patent). Telcordia cannot use Invention II to expand the scope of Invention I. *See ACCO*, 346 F.3d at 1079. And even if it could, Figure 10 does not, ironically, support Telcordia's construction: ***Figure 10 actually shows two framers, one for each assembled DTDM bit stream***.

[7] Telcordia argues that the Defendants offer inconsistent constructions for the "filling" and "inserting" limitations. Telcordia Br. at 6-7. That is incorrect. Consistent with the intrinsic evidence, Defendants construe the limitation of "inserting each of said packets comprised of data from one of said plurality of

every source of evidence relied upon by any party: (1) the Federal Circuit's prior analysis of the '306 patent, (2) the claim language and specification, and (3) the prosecution history.

(a) Telcordia Ignores The Federal Circuit's Opinion

It is telling that Telcordia ignores the Federal Circuit's analysis of the '306 patent in the *Fore* litigation. In describing the claimed system, the Federal Circuit explained that "[t]he system described by the patent ***allocates frames to each data source*** dynamically depending on the priority of each data source." *Bellcore*, 62 Fed. Appx. at 952. The Federal Circuit further determined that the DTDM bit stream "is shared among several data sources ***by allocating discrete segments, or 'frames,'*** of the bit stream ***to each data source***." *Id.* It makes no sense to say that frames are "allocated" between sources if a single frame can contain data from different sources. Rather, these statements only make sense if each frame contains data from the source to which it is allocated.

(b) Telcordia Misconstrues The Claim Language And Specification

The claim language of the '306 patent also runs counter to Telcordia's position. Telcordia argues that nothing in the claim language requires that data in a frame must come from a single source. Telcordia Br. at 8. This is not correct. Claim 4 expressly requires "inserting each of said packets comprised of ***data from one*** of said plurality of sources into any empty payload field." Moreover, Telcordia's argument that a frame can carry data packets from multiple sources because "every noun in the claim terms at issue is plural (*e.g.*, fields, packets, frames, sources)" is specious. Telcordia Br. at 8. The claims state that "***each*** of said frames includ[es] ***a*** transmission overhead ***field*** . . . and ***an*** empty payload ***field***." The relevant claim

---

sources into any empty payload field" in claim 4 and the counterpart limitations in claims 1 and 3, to mean "replacing the empty payload field with data from a single source." *See* Lucent's Opening Br. at 13-16. Telcordia also states that Defendants offer four separate interpretations of the same language of claim 4. This is also incorrect. The separate constructions (which are both internally consistent with one another and consistent with the intrinsic evidence) are of different aspects of the claim language of claim 4.

language covers only a single payload field per frame. To the extent the claims refer to packets and payload fields in the plural, it always is in the context of a phrase referring to multiple frames. *See, e.g.*, Claim 1 ("filling the empty payload fields in said frames"); Claim 3 ("inserting said packets . . . into the empty payload fields of said frames"). Multiple frames have multiple payload fields. Multiple packets are inserted into multiple fields in multiple frames. The claim language never suggests that one frame can include multiple payload fields containing data from different sources.

The patent confirms just the opposite. The Summary of the Invention explains that a frame is "the fundamental unit of data transport in DTDM," and describes each frame as having "a transmission overhead field, a header field and ***a data field***." *See, e.g.*, 4:49-56 ("***The payload field*** of each frame may be filled with ***a data packet*** including header ***or a slot*** from a circuit transmission stream . . . ."); 6:51-68 ("The DTDM frame is the fundamental unit of information transport in the DTDM transmission scheme. . . . ***[T]he*** payload field of each frame may be filled with ***a data packet*** including a header (H) or a slot from a circuit transmission stream."). The frame is the "fundamental" unit of information transport. If a frame contained multiple payload fields, the payload field would be a more "fundamental unit" than the frame, but that is not what the patent says or what it shows. See Fig. 1.

Telcordia itself described the '306 patent as requiring each frame to carry data from a single source to Judge Farnan in the *Fore* litigation: "When it [the controller] sees ***a complete packet*** stored up in one of the buffers, it opens the buffer output door, closes the frame generator output door so that the stream of ever[y] packet data is read out of the buffer and inserted into ***the payload field*** of the transmission st[r]eam and ***it displaces the empty packet bytes*** that would

otherwise be in the stream coming out of the frame generator." *Fore* Hearing Tr. dated March 23, 2000, at 13:12-20 (Ex. 9). This is exactly Defendants' construction.

Moreover, Telcordia's arguments are contradicted by the very statement in the '306 patent that Telcordia highlights as defining the DTDM concept: "The empty frames are shared by three tributaries by giving higher priority to the circuit tributary 9 and ***allowing the voice and graphics tributaries 5, 7, to contend for empty frames*** on a first come, first served basis." 7:48-52; Telcordia Br. at 14. If sources could share a single frame, there would be no need for sources to "contend" for frames. Furthermore, the passage cited by Telcordia continues: "Thus, the circuit tributary ***seizes one out of every three frames*** so that the regularity of the circuit transmission is maintained throughout the DTDM transmission link. Similarly, the voice tributary will ***seize one out of every 2,160 frames*** and the graphics tributary will ***seize on average one out of every 150 frames***." 7:53-58. If sources could share a single frame, the frames would not be "seized" by each of the source tributaries. Simply put, the specification could not be more clear: each frame is filled with data from only one source.[8]

(c) Telcordia's Reliance On The Prosecution History Is Misguided

Telcordia's reliance on the prosecution history also is misguided. Specifically, it relies on self-serving attorney statements that a frame can carry more than one data packet. Telcordia Br. at 8. Even if a frame could hold multiple packets, nothing in the claim language,

---

[8] Telcordia's assertion that Defendants' proposed constructions for the "filling" and "inserting" terms ignore the rule that different words should be construed to mean different things is surprising, considering that Telcordia itself has admitted that "inserting" and "filling" mean the same thing in the context of the '306 patent: "Claim 3 is simply claim 1 with the filling step broken into a packetizing step and an inserting step." *Fore* Hearing Tr. dated March 23, 2000, at 24:20-23; *see also* 25:4-6 (statements by Telcordia's counsel Richard Smith) (Ex. 9). In fact, Telcordia's proposed constructions for these terms equate the meaning of both "filling" and "inserting" with "writing." In addition, Telcordia's criticism of Defendants' use of "replacing" in their proposed construction rings hollow in view of Telcordia's representation that "a complete packet . . . inserted into the payload field . . . ***displaces*** the empty packet bytes that would otherwise be in the stream coming out of the frame generator." *Id.* at 13:12-20.

specification or prosecution history suggests that those packets can be from ***different sources***. In fact, the entirety of the intrinsic evidence establishes the contrary. *See* Lucent Opening Br. at 13-16. In addition, a construction allowing for multiple payloads in one frame would conflict irreconcilably with the patent's express definition of a frame:

> In a network utilizing DTDM, each transmission bit stream is divided into frames. These frames are the fundamental unit of data transport in DTDM. Each such frame comprises ***two fixed length fields***: overhead and payload.

4:48-53.[9] This passage makes clear that a frame has two fields, one overhead and one payload, but not multiple payload fields.[10]

Finally, Telcordia's argument that an after-the-fact statement in the prosecution history can broaden the meaning of a claim in defiance of the specification is wrong as a matter of law. The Federal Circuit has made clear that "[r]epresentations made during prosecution cannot enlarge the content of the specification." *Biogen Inc. v. Berlex Labs., Inc.*, 318 F.3d 1132, 1140 (Fed. Cir. 2003). The reason for this rule is straightforward: the prosecution history "often lacks the clarity of the specification and thus is less useful for claim construction purposes." *Phillips v. AWH Corp.*, 415 F.3d 1303, 1317 (Fed. Cir. 2005). Thus, the applicants' attempts to change the scope of the invention with self-serving statements made during prosecution should be rejected. *See, e.g., Multiform Desiccants, Inc. v. Medzam, Ltd.*, 133 F.3d 1473, 1482 (Fed. Cir. 1998) (rejecting applicant's attempt to broaden meaning of a claim term by submission of a

---

[9] In the *Fore* case, *Bellcore, Inc. v. Fore Sys., Inc*., 113 F.Supp. 2d 635, 646 (D. Del. 2000), Judge Farnan was not persuaded by Telcordia's argument that the same statements in the prosecution history supported a construction in which more than one packet could be placed in a single frame. *See* Bellcore Answering Br. at 10 n.10 (Ex. 10).

[10] Telcordia's argument is directly refuted by the specification, which is unequivocal that a frame is filled only if "the incoming DTDM frame . . . is not already occupied by a valid packet, *i.e.*, the incoming DTDM frame is empty." 9:38-41. Accordingly, once a valid packet from one source has been inserted, the frame is then occupied and cannot be filled again with data from a different source. Telcordia's argument that different sources can insert data into the same frame also conflicts with Judge Farnan's construction that "packets are only put into ***frames which are empty***."

dictionary definition "during patent prosecution" and explaining that such dictionary definition "could not serve to enlarge the scope of the claims in order to cover [defendant's] device"). Any other rule would allow an applicant's invention to impermissibly evolve years after an application is filed.[11]

3. "such that data in packetized format from any of said sources is written into any available empty payload field of any of said frames"

Judge Farnan construed this term to mean: "packets are only put in ***frames which are empty***." Defendants agree. Telcordia, on the other hand, offers an entirely new construction of this disputed term, despite having fully litigated this term in the *Fore* litigation, despite affirmatively choosing not to appeal this construction to the Federal Circuit, and despite repeatedly informing this Court that it was "happy" with and bound by Judge Farnan's construction. Telcordia is collaterally estopped from doing so.

Telcordia contends that "defendants' construction introduces a new and unnecessary concept – an 'empty frame.'" Telcordia Br. at 13. This is not correct. Defendants did not introduce the empty frame concept. Rather, that concept comes right from the patent and claim language. Indeed, Judge Farnan specifically found an "empty frame" requirement in the claims based on his study of the intrinsic record: "packets are only put in ***frames which are empty***." *Bellcore, Inc. v. Fore Sys., Inc.*, 113 F. Supp. 2d 635, 646 (D. Del. 2000). Telcordia did not challenge this construction on appeal.

---

[11] Telcordia also wrongly contends that Defendants' construction requiring that data from a single source replace non-source bits "suggests that an empty payload field must already exist before any source data can be inserted." Telcordia Br. at 7 n.3. Rather, Defendants' construction is consistent with the Federal Circuit's decision by requiring that packetized source data replace the non-source bits that exist in the portion of the payload field that has already been generated. This construction also comports with Judge Farnan's order that "empty payload field" means "empty of source data, but including bit signals of some kind." Thus, during the inserting process, the "bit signals of some kind" in the empty payload field are necessarily replaced with the packetized source data.

Nevertheless, Telcordia now urges this Court to rewrite Judge Farnan's earlier construction because it allegedly "presuppose[s] that a complete frame is generated before data is written into the empty payload field," and that "[t]his construction was overturned by the Federal Circuit." Telcordia Br. at 14 n.5. Telcordia is incorrect. Whether a "complete frame" is fully or partially generated before a framer starts filling it (the issue addressed by the Federal Circuit) has nothing to do with whether a packet can be inserted into a frame that already is occupied by a packet (*i.e.*, a non-empty frame). Moreover, the Federal Circuit's opinion reinforced Judge Farnan's construction, explaining that a framer must ***detect whether a frame is empty or full*** before the frame is completely generated and before a framer may begin inserting data:

> Because the transmission overhead field is shown preceding the payload field in the bit stream, *see id.* Fig. 1, a framer can determine whether an incoming ***frame*** is "***empty***" or "full" when it receives the overhead field, even if the remainder of the frame has yet to be generated. Accordingly, the embodiment described in the specification permits a framer to begin inserting data once it has received the overhead field and the first bytes of the payload field, without complete generation of an ***empty frame***.

Bellcore, 62 Fed. Appx. at 956The Federal Circuit acknowledged that a frame must be "empty" to allow insertion of data into the payload field regardless of whether it is fully generated. Likewise, the patent explicitly states that an "empty" frame is one that "is not already occupied by a valid packet." 9:38-41.

Telcordia also suggests that Judge Farnan changed his construction on remand. Again, this is not true: Judge Farnan did not retract the requirement that packets can only be put into "empty" frames merely by explaining what he meant by "empty." Telcordia Br. at 14 n.5. Telcordia's argument confuses two distinct concepts. That a frame has to be empty when a

packet is inserted is ***independent*** of what it in fact means to be empty.[12] Judge Farnan was clear that frames must be "empty" and never retracted that finding.

In any event, Judge Farnan's construction that "packets are only put into frames which are empty" is fully supported by the '306 patent, which is replete with references to and discussion of ***empty frames***. *See, e.g.*, 5:4-7; 5:23-28; 5:51-53; 5:61-63; 7:46-52; 8:50-52; 9:50-53; 9:59-65; 10:30-36. For example, the Summary of the Invention states that "using a DTDM multiplexer, time slots from each of the three signals would be inserted into the ***empty frames*** in a basic DTDM backbone signal." 5:51-53. Indeed, the very part of the specification that Telcordia cites actually supports Judge Farnan's construction: "The DTDM concept is supported by the language of the specification ('allowing the voice and graphics tributaries 5, 7, to contend for ***empty frames*** . . .')." Telcordia Br. at 14 (quoting 7:46-62). Telcordia itself described the method claimed in the '306 patent to Judge Farnan in the *Fore* litigation in this way:

> The transmission overhead field coming out of the frame generator is followed by a payload field. ***And when the frame generator generates the payload field, it puts what we call empty byte data in it***. It's bit values that represent like just zeroes, which ***indicate an absence of packet information in that payload field***.

Fore Hearing Tr. dated March 23, 2000, at 12:13-18 (Ex. 9). Telcordia went on to explain:

> When it [the controller] sees stored up in one of the buffers, it opens the buffer output door, closes the frame generator output door so that the stream of ever[y] packet data is read out of the buffer and inserted into the payload field of the transmission st[r]eam and ***it displaces the empty packet bytes*** that would otherwise be in the stream coming out of the frame generator.

Id. at 13:12-20 (describing an animation that "illustrate[d] how DTDM works").

---

[12] The parties' dispute over the meaning of Judge Farnan's construction of "empty payload field" was fully addressed in Lucent's opening brief and that discussion will not be repeated here. Lucent Op. Br. at 20-21.

Telcordia also contends that Judge Farnan's construction is wrong because "once the first packet is put into a frame, it would no longer be an 'empty frame' and a second packet could not be put into it." Telcordia Br. at 15. Telcordia's argument is circular. Telcordia is asserting that Judge Farnan's construction is wrong because it is inconsistent with Telcordia's position that a frame can contain multiple packets. ***Telcordia made and lost this exact argument in the Fore litigation***, and now seeks to have this Court undo Judge Farnan's construction. In its Answering Markman Brief in the *Fore* litigation, Telcordia argued:

> Fore wants the court, for non-infringement purposes, to construe the claims to require insertion of only a single packet in each frame so that systems that insert multiple packets per frame are not within the literal language of the claim.

Bellcore Answering Br. at 10 (Ex. 10).

Judge Farnan ***rejected that argument***, stating that "FORE contends that once a packet is inserted into a frame, it is no longer empty so other sources will not seize the filled frame," and that "[t]he Court agrees with FORE's proposed construction," and held that "accepting Bellcore's proposed construction of this phrase would read the word 'empty' out of the claim language." *Bellcore*, 113 F. Supp. 2d at 646; *accord* 9:2-4 ("If the DTDM frame currently located at the framer unit 53 of a particular interface 50 is empty, that interface may insert a packet into the payload field of the DTDM frame.").

Telcordia's also argues that a frame can include more than one ***payload*** field. Telcordia Br. at 14. Again, Telcordia made this argument in the *Fore* litigation – arguing that "Fore's attempt to have the Court rewrite the claims to require each frame to have 'one and only one empty payload field' must be rejected" – ***and lost***. *Bellcore*, 113 F. Supp. 2d at 646; Bellcore Answering Br. at 10 (Ex. 10); *accord* Summary of Invention 4:48-50 ("These frames are the fundamental unit of data transport in DTDM. Each such frame comprises two fixed length

fields: overhead and payload."); 6:52-57 ("The DTDM frame is the fundamental unit of information transport in the DTDM transmission scheme. . . . Each frame 1 comprises two fixed length fields designated transmission overhead (T) and payload . . . ."). Telcordia did not appeal this construction, and did not ask the Court to revisit this construction on remand. Telcordia therefore is bound by Judge Farnan's construction of this term.

4. "available empty payload field"/"empty payload field of any of said frames available to said inserting means"

Defendants' proposed construction gives meaning to both the terms "available" and "empty" by construing "available" to require a priority scheme to determine which source will be given access to the current frame. Lucent Op. Br. at 23.

In contrast, Telcordia's proposed construction for these terms reads the term "available" right out of the claims. Telcordia argues that the claims require no priority scheme and construes the above language to mean "a payload field that is available to receive packet data from a source." Telcordia Br. at 16. This is tautological. Under Telcordia's construction, the term "available" would have no meaning apart from the term "empty," as each frame would always be "available" whenever the frame is empty. Telcordia's attempt to read the word "available" out of the claims is inconsistent with Federal Circuit law. *See Bicon, Inc. v. The Straumann Co.*, -- F.3d --, No. 05-1168, 2006 WL 688797, at *4 (Fed. Cir. Mar. 20, 2006) (Ex. 11) ("Allowing a patentee to argue that physical structures and characteristics specifically described in a claim are merely superfluous would render the scope of the patent ambiguous, leaving examiners and the public to guess about which claim language the drafter deems necessary to his claimed invention and which language is merely superfluous, nonlimiting elaboration. ***For that reason, claims are interpreted with an eye toward giving effect to all terms in the claim***."); *Pause Tech., LLC v. TiVo, Inc.*, 419 F.3d 1326, 1334 (Fed. Cir. 2005) ("In construing claims, however, we must give

each claim term the respect that it is due."); *Merck & Co. v. Teva Pharms. USA, Inc.*, 395 F.3d 1364, 1372 (Fed. Cir. 2005) ("A claim construction that gives meaning to all the terms of the claim is preferred over one that does not do so.").[13]

B. THE '763 PATENT

1. "a communications network having a plurality of nodes interconnected in a ring configuration"

Telcordia's only concern about Defendants' construction of this term is that it would exclude an embodiment of the claimed invention described in the specification. Specifically, Telcordia argues that Defendants' construction requires the ring network of Claims 1 and 7 to be closed, while another embodiment disclosed in the specification depicts the ring network as open. To support its argument, Telcordia relies upon Figures 3 and 4, which show an alternative embodiment of the claimed invention: a "double" version in which ***two*** ring networks of the invention are connected together. 3:61-4:37. The fact that each of the ring networks in this alternative double ring network embodiment can communicate with the other ring network is the basis for Telcordia's claim that these ring networks are not closed, but instead open.[14]

Telcordia's argument depends on a distortion of the claim construction canon that a patent's claims should generally be construed to cover its preferred embodiment. This canon of construction, which is not applicable here, is set forth in *Vitronics Corp. v. Conceptronic, Inc.*, 90 F.3d 1576, 1583 (Fed. Cir. 1996). Specifically, Telcordia is arguing that ***all*** the claims must cover the alternative "double" ring network embodiment shown in Figures 3 and 4. There is no canon of construction that says ***all*** claims should be construed to cover all embodiments. *See*,

---

[13] Defendants' positions with respect to the remaining disputed terms in the '306 patent are fully set forth in Lucent's opening brief and will not be restated here.

[14] Telcordia does not allege that Cisco or anyone has ever used this alternative "double" version of the patent.

e.g., *ACCO*, 346 F.3d at 1079 (holding that it is proper to construe a patent's claims to cover only some embodiments when other uncovered embodiments were instead covered in a related patent). It makes perfect sense for the claim drafter to include a set of claims directed to the preferred embodiment and a different set of claims directed to an alternative embodiment. That is what happened here.

The '763 patent includes two independent claims, Claims 1 and 7, directed to a single closed ring network, which is the preferred embodiment depicted in Figures 1 and 2.[15] These are the two independent claims asserted in this case and they contain the claim language to be construed.

The '763 patent also contains a third independent claim, Claim 5, which is directed to the alternative "double" ring network embodiment of Figures 3 and 4. In Claim 5 and the related figures, two of the ring networks of the preferred embodiment are connected to allow communications to pass from one ring network to the other. Indeed, the description of these two figures in the patent states that the figures depict "two hybrid ring networks." 2:13-16. The specification is explicit that this alternative embodiment combines two of the ring networks that are the preferred embodiment of Claims 1 and 7. 3:61-63 ("FIG. 3 depicts an embodiment of my invention wherein ***two ring sets*** are joined in a dual-ring configuration at a common node"). Interestingly, Claim 5 requires a double network and thus unquestionably does ***not*** cover the single network preferred embodiment of Figures 1 and 2. Thus, if the Court were to follow Telcordia's reasoning, all claims would cover the alternative "double" ring network embodiment but all claims would not cover the preferred "single" ring network embodiment.

---

[15] Telcordia does not dispute that the single ring network described in Figures 1 and 2 is closed.

In short, Claims 1 and 7 should not be stretched to cover not only the preferred embodiment, but also the alternative "double" embodiment. Claim 5 covers that alternative. Claims 1 and 7 describe a single closed ring network and should be construed as such.

2. "multiplexed subrate communications" and "evaluating the integrity of the multiplexed subrate communications"

The parties' dispute concerning the phrase "evaluating the integrity of multiplexed subrate communications" centers on whether each subrate communication is individually evaluated for defects or whether the overall high-level multiplexed (combined) subrate communications are evaluated as one combined group. The core of Telcordia's position is: "If defects can be detected in all the subrate signals, then defects in less than all the subrate signals can also be detected." Telcordia Br. at 36. Telcordia thus asserts, in conclusory fashion, that if you can evaluate an overall multiplexed signal to determine if it is defective, as a matter of logic you must be able to evaluate individually each of the subrate communications that make up the multiplexed signal while they are combined in one electronic signal.[16]

As explained in Cisco's opening brief, there is no teaching in the '763 patent that permits the evaluation of the individual subrate communications while they are multiplexed into a high level multiplexed signal. *See* Cisco Op. Br. at 17-18. Significantly, Telcordia makes no effort to show that the patent describes such technology. The reason is that the patent specifically teaches

[16] An analogy is instructive. The "subrate communications" can be thought of as passengers on a bus, and the high-level multiplexed signals can be thought of as the buses themselves. When the claims refer to evaluating the integrity of the "multiplexed subrate communications," they are referring to an evaluation as to whether the bus has been interrupted from completing its route. Telcordia's construction suggests that this claim language also refers to evaluating whether each of the individual passengers, while they are traveling on an operating bus, suffer an injury resulting from the interruption in service. There is no teaching in the patent as to how this would even be done. In fact, the patent specifically teaches that the integrity of individual passengers (*i.e.*, constituent channels) while they are on the bus (*i.e.*, interleaved in the high level signal) cannot be evaluated until ***after*** the passengers disembark from the bus. 3:28-30.

that only the integrity of the higher level signal is evaluated; the patent does not explain at all how the subrate communications could be evaluated while they are multiplexed. 3:28-30.

Telcordia's assertion that Defendants' inclusion of the word "each" in its proposed construction implies that errors are detected only if they occur on both rings is a red herring. The word "each" in Defendants' construction merely indicates that all of the high level signals in the network, regardless of the ring they are traveling around, are inspected to determine whether they are defective.

Because the claim language "multiplexed subrate communications" reflects that the high-level (multiplexed) signal is all that is evaluated, and because the system described in the patent cannot evaluate the integrity of the subrate communications while they are multiplexed, this claim language should not be construed to cover the evaluation of each subrate communication individually as Telcordia proposes.

3. "associated with [both] the first ring and the second ring"

For this term, Telcordia relies solely on a dictionary definition for its construction of the word "associated," without reference to the rest of the claim or the overall context of the patent. The Federal Circuit rejected this approach in *Phillips*, explaining the "main problem with elevating the dictionary to such prominence is that it focuses the inquiry on the abstract meaning of words rather than on the meaning of claim terms within the context of the patent." 415 F.3d at 1321. As explained in Cisco's opening brief, Telcordia's dictionary-driven construction is inconsistent with the usage of this term in the context of the claim language, and reintroduces the very ambiguity in this term that was eliminated during prosecution in response to a rejection by the examiner. *See* Office Action dated Oct. 6, 1988, at 2 (Ex. 12); Resp. dated Jan. 4, 1989, at 4-6 (Ex. 13). In particular, at the examiner's request, the patentee amended the claims to clarify

that the claimed "monitoring means" was shared by ***both*** the first ring and the second ring. *Id.* Telcordia's proposed construction improperly attempts to read this requirement out of the claims.

4. "inserting an error signal on designated ones of [the] subrate communications"

The dispute between the parties regarding this limitation is whether the error signal is inserted ***after*** the subrate communications are demultiplexed. Telcordia denies that the error signal insertions are performed after demultiplexing, accusing Defendants of "simply importing" a limitation into the claims. The entirety of the patent, however, makes clear that the subrate communications that receive the error signals are those that have been demultiplexed.[17]

The "Summary of the Invention" section of the specification, in which the named inventor explains "my invention," is essential to understanding the meaning of this claim term. As Cisco's opening brief explained, the Federal Circuit has repeatedly held that statements describing the invention as a whole, in contrast to a preferred embodiment, limit the scope of the claims. *See, e.g., Nystrom v. Trex Co.*, 424 F.3d 1136, 1145 (Fed. Cir. 2005). Here, the inventor explicitly stated in the Summary of the Invention section that "an error signal is placed on all of the channels ***following the demultiplexing***." 1:52-54. And, throughout the specification, the patent repeatedly explains that the subrate channels must be extracted out of the higher level signal before the subrate channels can be manipulated in any way, including inserting an error signal onto them. *See, e.g.*, 2:42-45; 3:9-11; 3:29-304:7-12.

In short, there is no disclosure anywhere in the patent as to how an error signal could be inserted onto a subrate channel while it is interleaved into a high level signal. All requirements

---

[17] Telcordia asserts that the term "designated ones of the subrate channels" means the subrate channels "for which a defect is detected." This cannot be correct for the same reasons explained above with respect to the "evaluating" term. That is, there cannot be any individual subrate channels for which a defect is detected within the high level signal as Telcordia asserts because there is no disclosure as to how to detect a defect in a subrate channel interleaved in a high level signal. Rather, the integrity of the high level signal as a whole is evaluated.

are to the contrary. In order for the "controller means" to insert an error signal onto a subrate channel, the subrate channel must first be demultiplexed or extracted out of the high level signal. *Id.* Under such circumstances, the Federal Circuit has consistently construed terms in strict accord with their usage in the patent. *See, e.g.*, *Nystrom*, 424 F.3d at 1145 (construing the term "board" consistent with its usage in the specification because "there [is] nothing in the intrinsic record to support the conclusion that a skilled artisan would have construed the term [ ] more broadly).[18]

5. "monitoring means"

The term "monitoring means" renders Claims 1 and 7 indefinite because there is no structure in the specification linked in any way to the claimed function of monitoring and evaluating.[19] Recognizing the lack of any corresponding structure in the specification, Telcordia, in an attempt to salvage the validity of at least one claim in this patent, takes the position that the "monitoring means" term in Claim 7 is not subject to Section 112, ¶ 6 (even though it admits the very same term in Claim 1 is subject to § 112, ¶ 6). In doing so, Telcordia ignores the staple proposition of patent law that a claim term appearing in multiple claims should be construed consistently. *See Callicrate v. Wadsworth Mfg., Inc.*, 427 F.3d 1361, 1371 (Fed. Cir. 2005) ("Of course, this court interprets claim terms consistently throughout various claims of the same patent."). Then, contrary to well-established precedent, Telcordia contends that indefiniteness should not be considered as part of the claim construction process.

---

[18] As explained in Cisco's opening brief, the same analysis applies to "the detection of said error signal on said at least one of the subrate communications." Just as there is no disclosure of inserting an error signal on a channel interleaved into a high level signal, there is no disclosure of detecting an error signal on an individual channel until after it is demultiplexed out of the high level signal.

[19] For the reasons stated in Cisco's opening brief, "selector means" and "insertion means" are also indefinite because the specification does not disclose sufficiently definite structure.

(a) Monitoring Means Is A Means-Plus-Function Limitation In Claims 1 And 7

The parties agree that the term "monitoring means" in Claim 1 is a means-plus-function element under Section 112, ¶ 6. Telcordia's only basis for its contention that the same "monitoring means" element in Claim 7 is not subject to Section 112, ¶ 6 is its assertion that "monitoring means" in Claim 7 is "not linked to a specified function." Telcordia Br. at 39. However, the ***only*** difference between the term in Claim 1, which Telcordia admits is a means-plus-function term, and Claim 7 is that Claim 1 recites "monitoring means . . . ***for*** evaluating" and Claim 7 recites "evaluating . . . ***with*** monitoring means." It therefore appears that Telcordia is distinguishing Claim 7 because it only uses the word "means" and not the phrase "means for."

This distinction is wrong as a matter of law. In *Signtech USA, Ltd v. Vutek, Inc.*, 174 F.3d 1352 (Fed. Cir. 1999), the Federal Circuit squarely rejected any distinction between the use of "means" and "means for," and affirmed its well-established precedent that a patentee's use of the word "means" creates a presumption that § 112, ¶ 6 applies. *Id.* at 1356. In doing so, the Federal Circuit explained that "the phrase 'ink delivery means' is equivalent to the phrase 'means for ink delivery,' because 'ink delivery' is purely functional language." *Id.* For the same reason, the term "monitoring means . . . for evaluating" is equivalent to the term "evaluating . . . with monitoring means." Both terms recite "means" and use purely functional language.

The only way for Telcordia to overcome the presumption that § 112, ¶ 6 applies is to demonstrate that the "monitoring means" element in Claim 7 conveys sufficiently definite structure to perform the monitoring and evaluating function. Telcordia has not, and cannot, do so, because the "monitoring means" element in Claim 7 recites the very same language as that in Claim 1 which Telcordia concedes is entirely functional. The slight difference in grammatical structure (placing "monitoring means" at the end of the functional recitation in Claim 7 and

before the same functional language in Claim 1) does not change the lack of any recitation of structure for the claimed "means."[20]

(b) Indefiniteness Is "Inextricably Intertwined" With Claim Construction

Telcordia admits that an indefiniteness analysis is a pure question of law, but urges the Court to reject Defendants' indefiniteness positions because it "has not been afforded the opportunity to explore any fact or expert discovery that might bear on the issue of indefiniteness." Telcordia Br. at 28.

Telcordia's analysis ignores that courts routinely address questions of indefiniteness together with claim construction. In fact, the Federal Circuit has repeatedly held that an analysis of claim indefiniteness is "inextricably intertwined" with claim construction. *See, e.g., Atmel Corp. v. Information Storage Devices*, 198 F.3d 1374, 1379 (Fed. Cir. 1999); *see also Default Proof Credit Card Sys., Inc. v. Home Depot U.S.A., Inc.*, 412 F.3d 1291, 1298 (Fed. Cir. 2005) ("A determination of claim indefiniteness is a legal conclusion that is drawn from the court's performance of its duty as the construer of patent claims."). This is especially true with respect to means-plus-function claims, because the court's determination of the structure corresponding to a means-plus-function term, or absence thereof, is "indeed a matter of claim construction." *Id.*

Any discovery Telcordia alleges it needs "the opportunity to explore" would also be irrelevant here because Defendants have demonstrated that there is simply no structure in the specification linked to the claimed function of monitoring and evaluating. Cisco Op. Br. at 26-

---

[20] The fact that part of Claim 7 is termed a "method" does not take it outside § 112, ¶ 6 either. Courts have recognized that as technology becomes more complex, a simple dichotomy between apparatus and method claims is no longer applicable. *See Union Carbide Chem. & Plastics Tech. Corp. v. Shell Oil Co.*, 425 F.3d 1366, 1379-80 (Fed. Cir. 2005) (recognizing that method and process claims may have physical elements as components); *Moleculon Research Corp. v. CBS, Inc.*, 793 F.2d 1261, 1271-72 (Fed. Cir. 1986) (construing a structural recitation within a step of a method claim as a limitation). Because there is no dispute here that "monitoring means" in Claim 7 refers to a structural element for performing the evaluating step (Telcordia construes it to cover a circuit), there is no reason to differentiate between Claims 1 and 7.

29. In *Default Proof*, the Federal Circuit held that expert testimony cannot "supplant the total absence of structure from the specification." 412 F.3d at 1302. Where, as here, expert testimony would not be relevant to any disputed issues, an indefiniteness analysis is undoubtedly appropriate. *See, e.g., ASM America, Inc. v. Genus, Inc.*, 260 F. Supp. 2d 827, 857-58 (N.D. Cal. 2002) ("If the patent had arguably provided some structure for applying a purge gas, and the experts disagreed about what that structure would reveal to a person of ordinary skill in the art, the Court might possibly defer the indefiniteness inquiry to the summary judgment stage. Here, however, the failure to provide ***any*** structure for applying a purge gas requires that the Court find the claim indefinite as a matter of law.").

If Telcordia truly wanted to "explore" fact or expert discovery about the disclosure of its own patent, as it claims, there is no reason why it could not have done so before filing its claim construction brief. In fact, Telcordia does not even explain in a meaningful way the discovery about which it allegedly requires the opportunity to explore.

Because there are no disputed issues upon which an expert properly could opine, the Court can and should find Claims 1 and 7 indefinite.

(c) The Specification Does Not Disclose Any Structure Corresponding To The Claimed Function Of Monitoring And Evaluating

Telcordia points to column 3, lines 4-17 of the specification in an attempt to support its assertion that the "circuits described in the specification (for example, controllers 117 and 118)" correspond to the claimed monitoring and evaluating function.

Not only does the word "circuit" not even appear in the patent (much less in connection with describing the internal structure of the "controller"), but the portion of the specification Telcordia relies on, as well as the entirety of the specification, never link or associate the "controller" in any way with the function of monitoring or evaluating the high level multiplexed

signal. *See Default Proof*, 412 F.3d at 1298 ("A structure disclosed in the specification qualifies as 'corresponding' structure only if the specification or prosecution history clearly links or associates that structure to the function recited in the claim.").

The portion of the specification Telcordia relies on states that each "node" "monitors and evaluates," but is tellingly silent as to the structure within the node that performs the monitoring and evaluating function:

> Each node continuously monitors and evaluates the integrity of the multiplexed subrate signals arriving at the node.

Telcordia does not, and cannot, contend that the "node" itself is the structure corresponding to the monitoring and evaluating function because the claims are directed to an improved "node" of which the "monitoring means" is an element.

Instead, Telcordia asserts that the specification associates the "controller," with the monitoring and evaluating function. As Defendants previously explained, nowhere in the specification is the "controller" associated with any function other than inserting error signals and multiplexing and demultiplexing. Not surprisingly, the portion of the specification that Telcordia relies on associates the "controller" with the "inserting an error signal" function recited in the second element of Claim 1:

> When node 1 recognizes major line fault 122 in ring 100, controller 118 inserts an error signal onto the six subrate channels.

Therefore, because the specification never links or associates a controller, unidentified "circuitry" within a controller, or any other structure in the claimed node to the function recited in the "monitoring means" limitations in Claims 1 and 7, these claims fail to comply with the definiteness requirement of § 112, ¶ 2.

C. THE '633 PATENT

1. "transmitting . . . an RTS"

Telcordia's proposed construction of this limitation ignores the teaching of the '633 patent that expressly counsels against using the convergence sublayer for transmitting timing information.

The '633 patent criticizes the use of the convergence sublayer to transmit an RTS as "inefficient" and "disadvantageous[]." 3:32-34. Indeed, the patent states explicitly that the claimed invention does not use the convergence sublayer to transmit the RTS. Rather, the '633 patent equates the claimed transmission method with the prior art SFET system, which it describes as advantageous because it does ***not*** use the convergence sublayer for transmission. 2:55-57; 3:25-28; 6:52-53. Accordingly, the term "transmitting . . . an RTS" is properly construed to mean that the "the RTS is transmitted in a portion of the overhead other than the convergence sublayer."

Telcordia argues that the convergence sublayer is part of the ATM Adaptation Layer and that because the patent states that the invention uses the Adaptation Layer to transmit the RTS, the claims cannot be construed to require transmission of the RTS somewhere other than the convergence sublayer. Telcordia Br. at 28. Telcordia's argument and its brief, however, ignore the explicit statements in the '633 patent to the contrary:

First, describing the method used by the prior art SFET system for transmitting timing information, the patent states:

> The discrepancy between properly chosen submultiples of the two clocks is measured in units of a preassigned number of slip cycles of network clock. ***This clock slip information is conveyed via a Frequency Encoded Number (FEN) which is carried in the ATM Adaptation Layer (AAL) overhead***.

2:52-57.

Second, describing the SFET system further the patent states:

> Advantageously, however, ***a convergence sublayer is not required to transmit the FEN*** and only small overhead bandwidth is required to transmit the necessary information.

3:25-28.

Third, describing the method used to transmit the RTS, the patent states:

> ***Each successive RTS is incorporated within the ATM adaptation layer overhead*** by AAL processor 16.

6:52-53.

Telcordia cites only the third of these statements and then relies upon a dictionary to argue that the convergence sublayer is part of the Adaptation Layer. This is exactly what the Federal Circuit has stated cannot be done. *Phillips,* 415 F.3d at 1321 (overruling cases that placed emphasis on "abstract meaning of words rather than on the meaning of claim terms within the context of the patent"). The proper approach is to look to the patent – as Defendants have done – to see if the specification provides guidance on the meaning of the disputed term. *Id.* at 1317 ("It is . . . entirely appropriate for a court, when conducting claim construction, to rely heavily on the written description for guidance as to the meaning of the claims.").

Here, the specification is explicit. It says: (1) SFET transmits its synchronization information in the ATM adaptation layer overhead; (2) SFET is advantageous because it does not require a convergence sublayer to transmit is synchronization information; and (3) the invention, like SFET, uses the Adaptation Layer overhead to transmit its synchronization information. Consequently, the Adaptation Layer overhead in which the RTS is transmitted does not include the convergence sublayer overhead.

2. "transmitting means"/"means for transmitting"/"receiving means"/ "counting means"/"converting means"

Telcordia argues that the Court should not reach the issue of indefiniteness regarding these claim terms. As explained above (*see* '763 patent discussion at 27-28), it is entirely appropriate for the Court to rule that these claim terms are indefinite as part of the claim construction process because the '633 patent fails to describe, much less clearly link, any structure corresponding to these limitations. *See* Alcatel Op. Br. at 25-28, 37-39.

3. "residual time stamp (RTS)"

Telcordia's argument for its proposed construction of "residual time stamp (RTS)" as "the value of a P-bit counter sampled at the end of an RTS period" ignores the patent's explicit description of the claimed invention. Indeed, in proffering this construction, Telcordia gives only cursory attention to the actual dispute in the parties' proposed constructions – whether the RTS must be a single contiguous P-bit value or can be broken up into separate bits transmitted in some unspecified order one at a time.

The intrinsic record does not support Telcordia's proposed construction. As Telcordia notes, "RTS" was a novel term at the time of the claimed invention of the '633 patent. Telcordia Br. at 23. If the inventors intended that the P-bit value of the RTS could be broken up, it would have been incumbent upon the inventors to indicate that in the specification when they coined the term. Yet, the specification neither suggests nor teaches that the P-bit RTS can be broken up and transmitted one bit at a time. In fact, as cited by Telcordia, the specification refers to "***the P-bit RTS*** to be transmitted," showing ***the RTS*** is a contiguous P-bit number. 6:45-48.

That the P-bit representation cannot be broken up and transmitted one bit at a time is confirmed by the very purpose of the RTS. In the SRTS technique described in the '633 patent, the RTS is the core piece of data that allows the receiving end of a network to reconstruct the

timing information of a communication. 3:52-65. For that P-bit RTS to accurately denote the underlying number, each of the P bits must be contiguous.

4. "2p counts uniquely and unambiguously represent the range of possible network clock cycles within an RTS period"

For the reasons detailed above (*see* '763 patent discussion at 27-28), it is proper for the Court to make a determination of indefiniteness at the *Markman* stage of the litigation. This disputed term is indefinite and Telcordia has offered no meaningful argument to the contrary. It is telling that one of Telcordia's primary arguments against indefiniteness is "the fact that the patent is part of a standardized technology widely understood and employed by the industry." Telcordia Br. at 27 n.7. Not only does this argument fail to save the term for indefiniteness, but it is indicative of Telcordia's results-based attempts to construe the '633 patent claims to read on the subsequent industry standard on which Telcordia's infringement allegations are based.

5. "at the end of the RTS period"

Telcordia asserts that Defendants' proposed construction "indicates that a series of steps occur[]" which are not part of the steps listed in method Claims 1 and 5. Telcordia further claims that Defendants' construction would "exclude the preferred embodiment." These assertions are puzzling because Defendants propose construing the disputed term exactly as it is written in the claims: "at the end" means "at the end." It is Telcordia that rewrites "at the end" to mean something different – "after the end."

Telcordia states that "[i]n the preferred embodiment, after the RTS period ends and the P-bit counter is sampled, the ATM cell payload is processed in processor 16 and an ATM header is added in assembler 17. Only then is the cell transmitted." Telcordia Br. at 29 (citing 6:52-57). This is a mischaracterization of the patent. What the '633 patent actually says is:

> Each successive RTS is incorporated within the ATM adaptation layer overhead by AAL processor 16. The associated data to be transmitted (not

> shown) is also processed by processor 16 to form the payload of the cells, which are then assembled by an ATM assembler 17, which adds an ATM header for transmission over the network 18.

6:52-57. Nowhere does the patent state that any of these activities take place after the RTS period has ended. And, contrary to Telcordia's suggestion, Defendants do ***not*** argue that the transmission must occur "at the precise moment the RTS period ends." Telcordia Br. at 29. Rather, "at the end of the RTS period" simply means that the RTS is transmitted ***at the end*** of its RTS period.

Telcordia's invitation that the Court rewrite the claim to mean "***after*** the end" should be rejected, and the Court should adopt Defendants' proposed construction. *See K-2 Corp. v. Salomon S.A.*, 191 F.3d 1356, 1364 (Fed. Cir. 1999) ("Courts do not rewrite claims; instead, we give effect to the terms chosen by the patentee.").

6. "network clock"/"derived network clock"/"derived network clock frequency f_{nx}"

The '633 patent makes a consistent and purposeful distinction between the "network clock" and the "derived network clock," and Defendants' proposed constructions maintain that distinction. In fact, it is this distinction that is at the heart of the parties' dispute regarding several claim terms. Importantly, Telcordia's proposed claim constructions fail to directly address this dispute. Instead, Telcordia focuses on peculiar circumstances and unnecessarily complex and unhelpful constructions to blur the distinction between "network clock" and "derived network clock."[21]

---

[21] The parties dispute with respect to "network clock" is limited. The parties agree that the "network clock" is a timing reference that synchronizes the source and destination nodes in a network. Telcordia seeks to limit the term "network clock" by appending the words "SRTS function" to its construction. This is unnecessary and unhelpful. As Telcordia itself admits, the "network clock" "can serve many other timing functions in a working network." Telcordia Br. at 26. The "purpose" of the "network clock," is not inherent in its definition – the rest of the claim language defines how the "network clock" is used.

Nowhere in its opening brief does Telcordia directly address the parties' core dispute: whether the "network clock" and "derived network clock" are different or can be the same. Instead, Telcordia focuses on hypertechnical – and even superficial – issues to argue that the construction of the "derived network clock frequency f_{nx}" – and thus of the "derived network clock" – should be "the frequency of the network clock signal f_n expressed as a factor of x ('where x may be 1')."

At the outset, Telcordia's proposed construction is divorced from both the claim language and specification of the '633 patent. There is nothing in the '633 claims or specification that explains what it means for a network clock signal to be "expressed as a factor of x." In contrast, Defendants have proposed a construction that results from the claim language and the specification of the '633 patent: a clock ***derived*** by ***dividing*** the network clock ***by a rational number.*** *See* 11:51-53 ("[t]his clock, having a frequency f_n, is ***divided*** in frequency ***by a rational factor x*** by a divider 11 to produce a derived network clock having a frequency $f_{nx.}$"); Claim 33 ("where $f_{nx=}$ f_n**/x**, x is a rational number").

Moreover, Telcordia attempts to deflect from this correct construction by suggesting that "Defendants' construction denies the existence of the embodiment where x equals 1" and "limit[s] the claim to implementations requiring 'dividing' (where x is greater than 1)." These arguments are red herrings. Defendants do not disagree that the claim language might include the situation where x is 1, and Defendants' construction provides for that situation. To be sure, there are circumstances in which x may be 1, and in those cases, the "derived network clock" may have the same frequency as the "network clock." This is not in dispute: it is basic math. The number 1 is a rational number. Dividing a number by 1 results in the same number. Thus, even under Defendants' construction, it is possible that "***dividing*** the network clock ***by a***

rational number" means that you divide the network clock by 1. In those circumstances, the derived network clock frequency is the same as the network clock frequency. Telcordia's suggestion that Defendants' proposed construction "require[es] 'dividing' (where x is greater than 1)" and should be rejected because the claim language "requires only that x be a 'rational number'" is also incorrect. Defendants' construction is exactly what Telcordia argues the claim language requires: x is a "rational number."

Simply put, Telcordia's proposed construction is, at best, an unnecessarily complex construction of an already complex claim limitation, addressing an issue that is not even in dispute. At worst, it is an attempt by Telcordia to obscure the '633 patent's distinction between the "network clock" and "derived network clock" by reading in the one circumstance in which the frequency of the two clocks happens to be the same. Telcordia's construction should be rejected. *See* 3:40-4-38; *compare* Claim 1 to Claims 8 and 11. That the two clocks have the same frequency in this limited circumstance does not make the two distinct clocks one and the same any more than two clocks that independently say 2:00 p.m. are the same clock.

7. "network clock cycles"/"counting [the] network clock cycles"

Construction of these disputed terms is straightforward once the terms "network clock" and "derived network clock" are properly construed. This is confirmed by Telcordia's own arguments against Defendants' proposed constructions: rather than address the real dispute – whether the clock being counted is the "network clock" or the "derived network clock" – Telcordia instead focuses on issues that are ***undisputed***.

First, Telcordia argues that Defendants' construction of "counting the network clock cycles" is incorrect because it does not specify that the network clock is counted modulo 2^P. This argument misses the mark. Defendants ***agree*** that the network clock cycles are counted

modulo 2^P, as the claim itself states.[22] The parties' dispute is centered on ***which clock*** is being counted: do Claims 1 and 5 require counting of network clock cycles or ***derived*** network clock cycles? Using Defendants' construction for the "network clock," the proper construction of "network clock cycles" and "counting network clock cycles" naturally follows. The term "network clock cycles" means the actual number of cycles of the network clock (not the cycles of the derived network clock), and "counting the network clock cycles" means counting the actual number of cycles from the network clock (not the derived network clock). The mode used to count those cycles is the subject of other (undisputed) terms.

Similarly, Telcordia argues that Defendants' claim construction is incorrect because it does not state a "particular time period" for the counting. Telcordia Br. at 25. This is also incorrect. The parties do not dispute that the clock cycles are counted within an RTS period. Again, the parties dispute ***which clock*** is counted within an RTS period. As Claims 1 and 5 state, cycles of the "network clock" are counted within an RTS period, not cycles of the derived network clock.

8. "means, at the source node, for defining a derived network clock frequency fnx from a network frequency fn where fnx =fn/x, x is a rational number, and fnx is less than or equal to twice the service clock frequency"

Once again, Telcordia attempts to conflate the network clock and the derived network clock of the claims. This is manifest in the parties' dispute on both the function and the corresponding structure of this means-plus-function term. Telcordia's proposed construction attempts to rewrite the specification both to add structure not found in the specification (a direct connection and/or a multiplier) and to redraw the figures to eliminate the disclosed divide by x

[22] Replacing the disputed term in claim 1 with Telcordia's proposed construction results in the following redundant language: "at the source node, counting modulo 2^P the cycles of the network clock within an RTS period modulo 2^P . . . ."

circuit 11.[23] As explained in Alcatel's opening brief, and not meaningfully addressed by Telcordia, Telcordia's proposed construction has no support in the specification and thus would render the means-plus-function claim indefinite if adopted.

CONCLUSION

For the reasons set forth above, Lucent and Cisco respectfully request that the Court adopt their proposed constructions for the disputed claim terms of the '306, '763, and '633 patents.

YOUNG CONAWAY STARGATT & TAYLOR, LLP

/s/ John W. Shaw

John W. Shaw (I.D. #3362)
Monte T. Squire (I.D. #4764)
The Brandywine Building
1000 West Street
Wilmington, DE 19801
Telephone: (302) 571-6600
Facsimile: (302) 576-3334
jshaw@ycst.com
msquire@ycst.com
Attorneys for Defendant Lucent Technologies Inc.

MORRIS, NICHOLS, ARSHT & TUNNELL LLP

/s/ Leslie A. Polizoti

Jack B. Blumenfeld (I.D. #1014)
Leslie A. Polizoti (I.D. #4299)
1201 North Market Street
1201 North Market Street
Wilmington, DE 19899-1347
Telephone: (302) 658-9200
Facsimile: (302) 658-3989
jblumenfeld@mnat.com
lpolizoti@mnat.com
Attorneys for Defendant Cisco Systems, Inc.

[23] Telcordia attempts to delete the divide by x circuit 11 from figures 2 and 3 despite its admission that the divide by x circuit 11 is a necessary corresponding structure.

OF COUNSEL:

Steven C. Cherny
LATHAM & WATKINS LLP
885 Third Avenue, Suite 1000
New York, NY 10022
Telephone: (212) 906-1200
Facsimile: (212) 571-4864

David A. Nelson
Israel Sasha Mayergoyz.
David C. McKone
LATHAM & WATKINS LLP
Sears Tower, Suite 5800
Chicago, IL 60606
Telephone: (312) 876-7700
Facsimile: (312) 993-9767

OF COUNSEL:

Matthew D. Powers
Edward R. Reines
Jessica L. Davis
Sonal N. Mehta
Thomas B. King
WEIL, GOTSHAL & MANGES LLP
201 Redwood Shores Parkway
Redwood Shores, CA 94065
Telephone: (650) 802-3000
Facsimile: (650) 802-3100

Ryan Owens
WEIL, GOTSHAL & MAGES, LLP
767 Fifth Avenue
New York, NY 10153
Telephone: (212) 310-8000
Facsimile: (212) 310-8007

March 24, 2006

CERTIFICATE OF SERVICE

I, John W. Shaw, Esquire, hereby certify that on March 24, 2006, I caused to be electronically filed a true and correct copy of the foregoing document with the Clerk of the Court using CM/ECF, which will send notification that such filing is available for viewing and downloading to the following counsel of record:

Steven J. Balick, Esquire
Ashby & Geddes
222 Delaware Avenue, 17th Floor
P.O. Box 1150
Wilmington, DE 19899

I further certify that on March 24, 2006, I caused a copy of the foregoing document to be served by hand delivery on the above-listed counsel of record and on the following in the manner indicated:

BY ELECTRONIC MAIL

Donald R. Dunner, Esquire
Finnegan, Henderson, Farabow,
Garrett, & Dunner, L.L.P.
901 New York Ave., N.W.
Washington, DC 20001

York M. Faulkner, Esquire
Finnegan, Henderson, Farabow,
Garrett, & Dunner, L.L.P.
Two Freedom Square
11955 Freedom Drive
Reston, VA 20190

YOUNG CONAWAY STARGATT & TAYLOR, LLP

John W. Shaw (No. 3362)
The Brandywine Building
1000 West Street, 17th Floor
Wilmington, Delaware 19899
(302) 571-6600
jshaw@ycst.com

Attorneys for Lucent Technologies, Inc.