EXHIBIT 15

Webster's Third New International Dictionary

OF THE ENGLISH LANGUAGE UNABRIDGED

A Merriam-Webster
REG. U.S. PAT. OFF.

Utilizing all the experience and resources of more than one hundred years of Merriam-Webster® dictionaries

EDITOR IN CHIEF
PHILIP BABCOCK GOVE, Ph.D.
AND
THE MERRIAM-WEBSTER
EDITORIAL STAFF



MERRIAM-WEBSTER INC., *Publishers*
SPRINGFIELD, MASSACHUSETTS, U.S.A.



A GENUINE MERRIAM-WEBSTER

The name *Webster* alone is no guarantee of excellence. It is used by a number of publishers and may serve mainly to mislead an unwary buyer.

Merriam-Webster™ is the name you should look for when you consider the purchase of dictionaries or other fine reference books. It carries the reputation of a company that has been publishing since 1831 and is your assurance of quality and authority.

COPYRIGHT © 1993 BY MERRIAM-WEBSTER, INCORPORATED

PHILIPPINES COPYRIGHT 1993 BY MERRIAM-WEBSTER, INCORPORATED

WEBSTER'S THIRD NEW INTERNATIONAL DICTIONARY
PRINCIPAL COPYRIGHT 1961

Library of Congress Cataloging in Publication Data
Main entry under title:

Webster's third new international dictionary of the English language, unabridged: a Merriam-Webster/editor in chief, Philip Babcock Gove and the Merriam-Webster editorial staff.
p. cm.
ISBN 0-87779-201-1 (blue sturdite).—ISBN 0-87779-202-X (carrying case). — ISBN 0-87779-206-2 (imperial buckram).
1. English language—Dictionaries. I. Gove, Philip Babcock, 1902–1972. II. Merriam-Webster, Inc.
PE1625.W36 1993
423–dc20 93-10630
CIP

All rights reserved. No part of this book covered by the copyrights hereon may be reproduced or copied in any form or by any means—graphic, electronic, or mechanical, including photocopying, taping, or information storage and retrieval systems—without written permission of the publisher.

MADE IN THE UNITED STATES OF AMERICA
47484950QPH979695

Kurt F. Wendt Library
University of Wisconsin - Madison
215 N. Randall Avenue
Madison, WI 53706-1688

kind legs the strings of eggs laid by the female and carries them about until they hatch
ob·stet·ri·cate \ə'stɛtrə,kāt\ *vb* **-ED/-ING/-S** [LL *obstetricatus*, past part. of *obstetricare* to act as midwife, fr. L *obstetric-*, *obstetrix* midwife] *vi, archaic* : to function as a midwife ~ *vt, obs* : to attend (a woman) as a midwife at childbirth
obstetric forceps *n* : a forceps for grasping the fetal head or other part to facilitate delivery in difficult labor

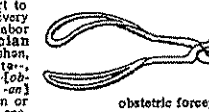

obstetric forceps

ob·ste·tri·cian \äbˌstəˈtrishən, ˌäbˌstˌ-, -bzˈtə-, -bstə-\ *n* **-S** [*obstetrics* + *-an*] : a physician or veterinary specializing in obstetrics
ob·stet·rics \äbzˈtetriks, -bˈstˌ-, äbzˈtˌ-, -bˈstˌ-\ *n pl but sing or pl in constr* [*obstetric* + *-s*, pl. suffix] : a branch of medical science that deals with birth and with its antecedents and sequels
ob·stet·rist \-rəst\ *n* **-S** [*obstetrics* + *-ist*] : OBSTETRICIAN
obstill·na·cy \ˈäbstənəsē, -bstˌ, -stl\ *n* **-ES** [ME, fr. ML *obstinatia*, fr. L *obstinatus* (past part. of *obstinare* to be set upon, be obstinate) + *-ia* -y] **1 a** : the quality or state of being obstinate : fixedness in will, opinion, or resolution : firm and usu. unreasonable adherence to an opinion, purpose, or system : STUBBORNNESS, PERTINACITY, PERSISTENCY **b** : the quality or state of being difficult to remedy, relieve, or subdue (the ~ of tuberculosis) (the ~ of this evil) **2** : an instance of being obstinate : an obstinate action or stand (irritated by his neighbor's petty *obstinacies*)
ob·sti·nance \-nən(t)s\ *or* **ob·sti·nan·cy** \-nənsē\ *n, pl* **obstinances** *or* **obstinancies** [ML *obstinantia*, fr. *obstinant-*, *obstinans* (pres. part. of *obstinare*) + *-ia* -y] : OBSTINACY
ob·sti·nate \-nət, *usu* -ˌnāt+V\ *adj* [ME *obstinat*, fr. L *obstinatus*, past part. of *obstinare* to be set upon, be obstinate, fr. *ob-* to, over + *-stinare* (akin to *stare* to stand) — more at OB-, STAND] **1** : pertinaciously adhering to an opinion, purpose, or course ; not yielding to reason, arguments, or other means **2** : not yielding readily : not easily subdued or removed (~ fever) (these ~ obstructions)
SYN OBSTINATE, DOGGED, STUBBORN, PERTINACIOUS, MULISH, STIFF-NECKED, PIGHEADED, and BULLHEADED can mean, in common, fixed or unyielding in one's course, purpose, opinion, and so on. OBSTINATE implies persistent adherence to an opinion, purpose, or course, suggesting unreasonableness or perversity rather than steadfastness (a man so *obstinate* as to resist the strongest arguments can never be brought to repentance, for he can never be persuaded of his errors —Leslie Stephen) (so stupid and so *obstinate* that it was impossible to get him to do or understand anything —Anthony Trollope) (not courageous, only quarrelsome; not determined, only *obstinate*; not masterful, only domineering —G.B. Shaw) DOGGED adds the idea of downright or tenacious persistence, usu. connoting stolid determination or unwavering purpose (the immense amount of planning, of *dogged* study; the tireless, constant activity, the ability to get what he was after —Adrian Langley) (the dull, *dogged*, unspectacular heroism which was needed for fighting filth and ignorance and disease —Louis Bromfield) (*dogged* hope and resolution for a peaceful union of nations —Laurence Stapleton) STUBBORN implies the unyielding adherence of OBSTINATE and the stolid determination of DOGGED, carrying strongly the idea of fixedness of character, in a person, that resists attempts to change his purpose, course, or opinion or, in a thing, that makes it hard to work with or manipulate (the *stubborn* resistance which he met showed that the temper of the people was not easily broken —J.R.Green) (his *stubborn* refusal to accept the consequences of his own discoveries —J.B.Conant) (she was so *stubborn* that she wouldn't adjust her opinions —Sinclair Lewis) (man and beast joined against *stubborn* nature and her grudging soil —Ann F. Wolfe) PERTINACIOUS stresses a sticking to a chosen pursuit, purpose, and so on, with an unusual, often annoying, persistence (a *pertinacious* newsman) (a *pertinacious* mosquito) MULISH suggests the unreasonable obstinacy of a mule (in refusing to accept ardent suitors who were urged upon her, she was obstinately *mulish* —*Fashion Digest*) (a *mulish* determination to make the worst of every thing —T.S.Eliot) (here is a *mulish* quality about vellum that renders it difficult to cope with —Edith Diehl) STIFF-NECKED, even more than OBSTINATE or STUBBORN, stresses inflexibility, suggesting a haughtiness or arrogance that will not be directed (*stiff-necked* in his determination to wage a national campaign rather than a series of local campaigns —*Newsweek*) (the *stiff-necked* secretaries of Cromwell's army who had been glad to stand in pillories and suffer their ears to be cropped rather than put bread in the mouths of priests —V.W.Brooks) PIGHEADED and BULLHEADED, terms of severe reproach, suggest a particularly perverse or stupid kind of obstinacy, PIGHEADED stressing rather imperviousness to reason, BULLHEADED stressing rather headstrong determination (too . . . *pigheaded* to listen to reason —Dashiell Hammett) (a *pigheaded* refusal to budge from an untenable political position) (a *bullheaded* driving at a private goal no matter who else is hurt along the way)
ob·sti·nate \-ˌnāt\ *vt* **-ED/-ING/-S** [ME *obstinaten*, fr. L *obstinatus*, past part. of *obstinare* to be obstinate] : to make obstinate
ob·sti·nate·ly *adv* [ME *obstinatly*, fr. *obstinat* + *-ly*] : in an obstinate manner : with obstinacy
ob·sti·nate·ness *n* **-ES** : the quality or state of being obstinate
ob·sti·na·tion \ˌäbzˌtəˈnāshən, -bstˌ-\ *n* **-S** [ME *obstinacioun*, fr. MF *obstination*, fr. L *obstination-*, *obstinatio*, fr. *obstinatus* (past part. of *obstinare*) + *-ion-*, *-io* -ion] : OBSTINACY
ob·sti·pate \ˈäbzəˌpāt, -bstˌ\ *vt* **-ED/-ING/-S** [back-formation fr. *obstipation*] : to bind up : constipate severely
ob·sti·pa·tion \ˌäbˌstəˈpāshən\ *n* **-S** [LL *obstipation-*, *obstipatio* close pressure, fr. L *ob-* + *stipare* to press together + *-tion-*, *-io* -ion — more at STIFF] : BLOCKAGE (~ of a body passage); *specif* : severe and obstinate constipation
ob·strep·er·ate \əbˈtrepəˌrāt, äbˌ, -bˈstˌ\ *vi* **-ED/-ING/-S** [*obstreperous* + *-ate*] *archaic* : to make a noise
ob·strep·er·ous \-p(ə)rəs\ *adj* [L *obstreperus*, fr. *obstrepere* to make noise against, fr. *ob-* to, against + *strepere* make noise; akin to OE *hræfn* quarrel, discord, MLG *drevelinge* vain chatter, ON *thrapi* chatter; all of imit. origin — more at ON] **1** : marked by or engaging in aggressive noisiness : LOUD, CLAMOROUS (~ roaring) **2** : stubbornly defiant : resisting control or restraint often with a show of noisy disorder : TURBULENT, UNMANAGEABLE (an ~ crew) (~ elephants —Faubion Bowers) SYN see VOCIFEROUS
ob·strep·er·ous·ly *adv* : in a loud, clamorous, or disorderly manner : REBELLIOUSLY
ob·strep·er·ous·ness *n* **-ES** : the quality or state of being obstreperous
obstriction *n* **-S** [LL *obstriction-*, *obstrictio*, fr. L *obstrictus* (past part. of *obstringere* to bind, obligate, fr. *ob-* to, over + *stringere* to draw tight, bind) + *-ion-*, *-io* -ion — more at OB-, STRAIN] *obs* : the condition of being obligated : OBLIGATION
ob·strop·e·lous \əbˈträpələs, äbˌ-, -bˈstˌ\ *dial var of* OBSTREPEROUS
ob·struct \əbˈträkt, äbˌ-, -bˈstˌ\ *vb* **-ED/-ING/-S** [L *obstructus*, past part. of *obstruere* to build against, block up, fr. *ob-* to, against + *struere* to pile up, build — more at OB-, STRUCTURE] *vt* **1** : to block up ; stop up or close up ; place an obstacle in or fill with obstacles or impediments to passing (traffic ~*ing* the street) (veins ~*ed* by clots) **2** : to be or come in the way of ; hinder from passing, action, or operation ; IMPEDE, RETARD (unwise rules ~ legislation) (constant interruptions ~ our progress) **3** : to cut off from sight ; shut out (the high wall ~*ed* the view) ~ *vi* : to place obstacles in the way ; IMPEDE SYN see HINDER
ob·struc·tion \-kshən\ *n* **-S** [L *obstruction-*, *obstructio* fr. *obstructus* (past part. of *obstruere* to obstruct) + *-ion-*, *-io* -tion] **1** : an act of obstructing or the condition of being obstructed: as **a** : a condition of being clogged or blocked (intestinal ~) (respiratory ~ due to thyroid disease) **b** *obs* : arrest of vital functions : DEATH **c** : a delay or attempted delay of business by dilatory parliamentary tactics in a deliberative body (as a legislature) — compare FILIBUSTER **2 a** : the illegal hindrance of the progress of an opponent in a game (as soccer) by remaining in the path he wants to follow **2** : something that obstructs or impedes : IMPEDIMENT, HINDRANCE (removing ~*s* from the path) (this was the major ~ to the success of our plan) SYN see OBSTACLE
ob·struc·tion·ism \-ˌnizəm\ *n* **-S** [*obstructionist* + *-ism*] : the practice of an obstructionist : deliberate interference with progress or business
ob·struc·tion·ist \-nəst\ *n* **-S** *often attrib* : one that hinders progress : one that deliberately and often by indirect or delaying tactics obstructs business (as in a legislative body) — **ob·struc·tion·is·tic** \-ˌnˈistik\ *adj*
ob·struc·tive \əbˈträktiv, äbˌ-, -bˈstˌ-, -ēv *also* -əv\ *adj* [L *obstructus* + E *-ive*] **1** : tending to obstruct : presenting obstacles : HINDERING **2** : of, relating to, or characterized by obstruction — **ob·struc·tive·ly** \-tivlē, -tēv- *also* -ləv-\ *n* **-ES**
²obstructive \"\ *n* **-S** : an obstructive person or thing
obstructive jaundice *n* : jaundice due to obstruction of the biliary passages (as by gallstones or tumor)
ob·struc·tor \əbzˈträktə(r), äbˌ-, -bˈstˌ-\ *n* **-S** : one that obstructs
¹ob·stru·ent \ˈäbstrəwənt -bstˌ-\ *adj* [L *obstruent-*, *obstruens*, pres. part. of *obstruere* to obstruct — more at OBSTRUCT] **1** *archaic* : causing obstruction : blocking up **2** *phonetics* : characterized by stoppage or friction
²obstruent *n* **-S** : a speech sound in the articulation of which the breath passage is obstructed completely or to the point of producing friction : STOP, FRICATIVE — compare RESONANT
obstruse *adj* [L *obstrusus*, MS var. of *abstrusus* concealed — more at ABSTRUSE] *obs* : ABSTRUSE
ob·stu·pe·fy \äbzˈt(y)üpəˌfī, -bˈstˌ-\ *vt* [L *obstupefacere*, fr. *obstupefactus*, past part. of *stupefacere* to stupefy — more at OB-, STUPEFY] : STUPEFY
obt *abbr* **1** obedient **2** [L *obiit*] he died
ob·tain \əbˈtān, äbˌ-\ *vb* **-ED/-ING/-S** [ME *obteinen*, fr. MF & L; MF *obtenir*, fr. L *obtinēre* to take hold of, fr. *ob-* to, completely + *-tinēre* (fr. *tenēre* to hold) — more at OB-, THIN] *vt* **1 a** : to gain or attain possession or disposal of usu. by some planned action or method (ability to doubt until evidence is ~*ed* —John Dewey) (~*ing* the information easily) **b** : to bring about or call into being : EFFECT (~ quiet for their annual meetings —*Amer. Guide Series: N.Y.City*) **2** *obs* : HOLD, KEEP, POSSESS, OCCUPY (he who ~*s* the monarchy of heaven —John Milton) **3** *obs* : to arrive at : ATTAIN, REACH ~ *vi* **1** *archaic* : SUCCEED **2** *obs* : ATTAIN, ARRIVE — used with *to* or *unto* **3** : to have a firm footing ; become recognized or established ; be prevalent or general (the custom ~*s* of going to the seashore in summer) (a greater degree of free expression than usually ~*s* in film production —Roger Manvell) SYN see GET
ob·tain·able \-nəbəl\ *adj* : capable of being obtained ; AVAILABLE
ob·tain·al \-nᵊl\ *n* **-S** [*obtain* + *-al*] : OBTAINMENT
ob·tain·er \-nə(r)\ *n* **-S** : one that obtains
ob·tain·ment \-mənt\ *n* **-S** **1** : the act or process of obtaining **2** : something that is obtained
obtd *abbr* obtained
ob·tect \əbˈtekt\ *also* **ob·tect·ed** \-təd\ *adj* [*obtect* fr. L *obtectus*, past part. of *obtegere* to cover up, fr. *ob-* to, over + *tegere* to cover; *obtected* fr. L *obtectus* + E *-ed*] — more at OB-, THATCH] : enclosed in or characterized by enclosure in a firm chitinous case or covering (an ~ pupa) (~ metamorphosis) — compare EXPOSED
ob·tem·per \əbˈtempər\ *vt* [MF *obtemperer*, fr. L *obtemperare*, fr. *ob-* to, over + *temperare* to temper, mingle properly — more at OB-, TEMPER] *Scots law* : SUBMIT, COMPLY, OBEY
ob·tem·per·ate \-rət\ *vi* [ME *obtemperat*, fr. L *obtemperatus*, past part. of *obtemperare* to comply, obey] *archaic* : OBEY
obtend *vt* [L *obtendere* to stretch before, draw out, pretend, fr. *ob-* to, toward + *tendere* to stretch — more at OB-, TEND] **1** *obs* : to offer as a reason : PRETEND **2** *obs* : OPPOSE
ob·ten·e·brate \äbˈteneˌbrāt\ *vt* **-ED/-ING/-S** [LL *obtenebratus*, past part. of *obtenebrare* to darken, fr. L *ob-* to, toward, over + *tenebrare* to darken, fr. *tenebrae* darkness — more at OB-, TENEBRIFY] : to darken by or as if by shadowing
ob·ten·tion \əbˈtenchən, äbˌ-\ *n* **-S** [F, fr. L *obtentus* (past part. of *obtinēre* to take hold of) + F *-ion* — more at OBTAIN] : an act or instance of obtaining : OBTAINMENT
ob·test \äbˈtest\ *vb* [MF *obtester*, fr. L *obtestari*, fr. *ob-* to, toward + *testari* to be a witness — more at OB-, TESTAMENT] *vt* **1** : BESEECH, SUPPLICATE **2** : to call to witness : invoke as a witness ~ *vi* **1** : SUPPLICATE **2** : PROTEST
ob·tes·ta·tion \ˌäbˌtəˈstāshən\ *n* **-S** [L *obtestation-*, *obtestatio*, fr. *obtestatus* (past part. of *obtestari*) + *-ion-*, *-io* -ion] : an act of obtesting : solemn supplication or adjuration
obtract *vt* **-ED/-ING/-S** [L *obtractare* to detract from, fr. *ob-* + *-tractare* (fr. *tractare* to draw, handle, manage, treat) — more at TREAT] *obs* : SLANDER — **obtractation** *n* **-S** *obs* — **obtractator** *or* **obtractor** *n* **-S** *obs*
ob·trude \əbˈtrüd, äbˌ-\ *vb* **-ED/-ING/-S** [L *obtrudere*, fr. *ob-* to, toward, against + *trudere* to thrust — more at OB-, THREAT] *vt* **1** : to thrust out ; push or extend into sight : EXTRUDE (the snail slowly *obtruded* his tentacle) **2** : to thrust forward, present, or call to notice without warrant or request (not a man to ~ his beliefs casually) (forced to ~ ourselves into their party) ~ *vi* : to thrust oneself or some other matter upon attention : INTRUDE (do what we may our childhood background will ~)
ob·trud·er \-də(r)\ *n* **-S** : one that obtrudes
ob·truncate \(ˌ)äbˈtəŋˌkāt\ *vt* [L *obtruncatus*, past part. of *obtruncare* to cut off, fr. *ob-* toward, against, over + *truncare* to cut off, fr. *truncus* trunk — more at OB-, TRUNCATE] : to cut the head or top from
ob·tru·sion \əbˈtrüzhən, äbˌ-\ *n* **-S** [LL *obtrusion-*, *obtrusio* fr. L *obtrusus* (past part. of *obtrudere* to obtrude) + *-ion-*, *-io* -ion] **1** : the act of obtruding : a thrusting upon others by force or unsolicited **2** : something that is obtruded
ob·tru·sive \əbˈtrüsiv, (ˌ)äbˌt-, -üz, ēv *also* əv\ *adj* [L *obtrusus* + E *-ive*] **1** : thrust out : PROTRUDING (a sharp ~ edge) **2 a** : disposed to obtrude : FORWARD, PUSHING, INTRUSIVE (~ behavior) **b** : undesirably or unattractively noticeable or showy (hats will be less ~ this season) (the propaganda was occasionally ~) SYN see IMPERTINENT
ob·tru·sive·ly \-sivlē, -lī\ *adv* : in an obtrusive manner : so as to be obtrusive
ob·tru·sive·ness \-sivnəs, ēv *also* əv-\ *n* **-ES** : the quality or state of being obtrusive
ob·tund \əbˈtənd\ *vt* **-ED/-ING/-S** [ME *obtunden*, fr. L *obtundere* to beat against, to dull — more at OBTUSE] : to reduce the edge or violence of : DULL, BLUNT (~*ed* reflexes) (agents that ~ pain)
¹ob·tund·ent \(ˌ)ᵊäbˈtəndənt\ *adj* [L *obtundent-*, *obtundens*, pres. part. of *obtundere*] : blunting irritation or lessening pain
²obtundent \"\ *n* **-S** : an agent that blunts pain or dulls sensibility
ob·tu·rate \ˈäbtyəˌrāt\ *vt* **-ED/-ING/-S** [L *obturatus*, past part. of *obturare* to stop up, fr. *ob-* toward, over + *-turare* (akin to *tumēre* to swell) — more at OB-, THUMB] : OBSTRUCT, CLOSE; *esp* : to stop (a gun breech) so as to prevent the escape of gas in firing — **ob·tu·ra·tion** \ˌäbtyəˈrāshən\ *n* **-S**
ob·tu·ra·tor \ˈäbtyəˌrād·ə(r)\ *n* **-S** *often attrib* [NL, fr. L *obturatus* + *-or*] **1** : one that closes or stops up an opening: **a** : either of two muscles arising from the obturator membrane and adjacent bony surfaces: (1) *or* **obturator ex·ter·nus** \-ekˈstərnəs\ : a muscle arising from the outer surface of the membrane and being inserted into the trochanteric fosse of the femur (2) *or* **obturator in·ter·nus** \-inˈtərnəs\ : a muscle arising from the inner surface of the membrane and being inserted into the greater trochanter of the femur **b** : a prosthetic device that usu. has the form of a plate and is designed to bridge an unnatural opening (as a fissure of the palate) **c** : a mechanism of a breech-loading gun **d** : a hooded swelling of the placenta that fits over the nucellus in some plants
obturator artery *n* : an artery that passes out through the obturator canal and dividing into two branches is distributed to the muscles and fascias of the hip and thigh
obturator canal *n* : the small patent opening of the obturator foramen through which nerves and vessels pass
obturator foramen *n* : an opening that is situated between the pubic and ischial parts of the innominate bone and that is largely closed by the obturator membrane — see OBTURATOR CANAL
obturator membrane *n* : a firm fibrous membrane covering most of the obturator foramen and serving as origin of the obturator muscles
obturator nerve *n* : a branch of the lumbar plexus arising from the second, third, and fourth lumbar nerves and supplying the hip and knee joints, adductor muscles of the thigh, and skin
obturator vein *n* : a tributary of the internal iliac vein that accompanies the obturator artery
ob·turbinate \(ˌ)äbˈtə(ˌ)nāt, -ˈtyu\ *adj* [ISV *ob-* + *turbinate*] : inversely turbinate
ob·tuse \əbˈt(y)üs, (ˌ)äbˈ-\ *adj, sometimes* **-ER/-EST** [L *obtusus*, past part. of *obtundere* to beat against, to dull, fr. *ob-* to, against + *tundere* to beat — more at OB-, STUTTER] **1** : lacking acuity of sensibility or perceptions ; having neither delicate feelings nor alert awareness ; DENSE (too ~ to take a hint) (a dull ~ person) **2 a** *of an angle* : exceeding 90 degrees but being less than 180 degrees — see ANGLE illustration **b** : not pointed or acute ; BLUNT (an ~ contour) **c** *of a leaf* : blunt or rounded at the free end **d** : OBTUSE-ANGLED **3** : not causing an acute impression ; MILD (an ~ pain) SYN see DULL
obtuse-angled \-ˈ-ˌ-\ *also* **obtuse-angular** \-ˈ-ˌ-\ *adj* : having one or more angles that are obtuse
obtuse bisectrix *n* : the bisectrix of the obtuse angle formed by the axes of a biaxial crystal — called also *second mean line*
ob·tuse·ly *adv* : in an obtuse manner : so as to be obtuse
ob·tuse·ness *n* **-ES** : the quality or state of being obtuse
obtusi- *comb form* [NL, fr. L *obtusus*, past part.] : obtusely (*obtusirostrate*) (*obtusifolious*)
ob·tu·sion \əbˈt(y)üzhən\ *n* **-S** [LL *obtusion-*, *obtusio*, fr. L *obtusus* (past part. of *obtundere*) + *-ion-*, *-io* -ion] : a blunting or a condition of being blunted
ob·tu·si·ty \əbˈtüsədē\ *n* **-ES** [ML *obtusitas*, fr. L *obtusus* + *-itas* -ity] : OBTUSENESS; *esp* : human density and insensitivity
ob·ugrian \(ˌ)äbˈ+\ *n* **-S** *usu cap O&U* [*Ob*, river in Siberia + *Ugrian*] : a member of an Ostyak and Vogul people of Siberia that is of Finno-Ugrian ethnic classification, has a primitive hunting and fishing economy, and is closest linguistic ally to the Magyars
ob·um·brant \(ˌ)äbəmbrənt\ *adj* [L *obumbrant-*, *obumbrans*, pres. part. of *obumbrare* to overshadow] : OVERHANGING (~ hackle feathers)
¹obumbrate *adj* [L *obumbratus*, past part. of *obumbrare* to overshadow, fr. *ob-* to, over + *umbrare* to shade, fr. *umbra* shadow — more at OB-, UMBRAGE] *obs* : darkened by or as if by shadow
²ob·um·brate \äbˈəmˌbrāt\ *vt* **-ED/-ING/-S** [L *obumbratus*, past part. of *obumbrare*] **1** : SHADE, DARKEN, CLOUD **2** *archaic* : ADUMBRATE — **ob·um·bra·tion** \ˌäbˌəmˈbrāshən\ *n* **-S**
obus \ōbüz, -ez; ōbəs\ *n, pl* **obus** \"\ *or* **obus·es** \ōbəsəz\ [F, fr. G *haubitze* howitzer — more at HOWITZER] : an artillery shell
obv *abbr* obverse
ob·vallate \(ˌ)äbˈ+\ *adj* [L *obvallatus*, past part. of *obvallare* to surround with a wall, fr. *ob-* toward, over + *vallare* to surround with a wall, fr. *vallum* wall, rampart — more at OB-, WALL] : surrounded by or as if by a wall (~ papillae)
ob·va·la·tion \ˌäbvəˈlāshən\ *n* **-S** [LL *obvelare* to cover over, hide (fr. *ob-* toward, over + *velare* to cover, fr. *velum* covering, veil) + E *-ation* — more at OB-] : VEILING, CONCEALING — compare REVELATION
ob·ven·tion \əbˈvenchən\ *n* **-S** [ME *obvencioun*, fr. MF *obvention*, fr. L *obvention-*, *obventio* income, revenue, fr. L *obventus* (past part. of *obvenire* to come about, fr. *ob-* to, toward + *venire* to come) + *-ion-*, *-io* -ion — more at OB-, COME] : something that comes casually (as an incidental advantage or a voluntary additional religious offering)
ob·verse \äbˈvərs, (ˌ)äbˈv-, -vəs, -vəls\ *adj* [L *obversus*, past part. of *obvertere* to turn towards] **1** : facing the observer or opponent — opposed to *reverse* **2** : having the base or end next the attachment narrower than the top or free end (an ~ leaf) **3** : constituting a counterpart or complement — **ob·verse·ly** *adv*
²ob·verse \ˈäbˌvərs, äbˈvərs, -vəs, -vəls\ *n* **-S** [L *obversus*, past part. of *obvertere*] **1 a** : the side of a coin, token, medal, or currency note that is considered the front and that bears the principal device and lettering; *broadly* : a front or principal surface **b** : the more conspicuous of two possible sides, things, or cases (the ~ of this situation) **2 a** : a counterpart necessarily involved in or answering to a fact or truth **b** *logic* : a proposition which may be inferred immediately from another and in which the quality of the given proposition is changed, the subject term remains unaltered, and the predicate is the negative of that which is given (the ~ of "all *A* is *B*" is "no *A* is not *B*") SYN see CONVERSE
ob·ver·sion \äbˈvərzhən, -vəshˌ, -vəlzh- *also* -shən\ *n* **-S** [LL *obversion-*, *obversio*, fr. *obversus* (past part. of *obvertere*) + *-ion-*, *-io* -ion] *logic* : the operation of immediate inference that gives the obverse
ob·vert \əˈvərt, -vət, -vəlt\ *vt* **-ED/-ING/-S** [L *obvertere* to turn towards, fr. *ob-* to, toward + *vertere* to turn — more at OB-, WORTH] **1** : to turn so as to present a different surface to view ; to change the appearance or seeming of **2** : to subject (a proposition in logic) to obversion
ob·ver·tend \ˌäbvəˈ(r)tend\ *n* **-S** [L *obvertendus*, gerundive of *obvertere* to obvert] : a proposition upon which the operation of obversion is performed
ob·vi·a·ble \ˈäbvēəbəl\ *adj* [*obviate* + *-able*] : capable of being obviated
ob·vi·ate \ˈäbvēˌāt, *usu* -ədᵊ+V\ *vt* **-ED/-ING/-S** [LL *obviatus*, past part. of *obviare* to meet, withstand, oppose, fr. L *obviam* in the way] **1** : to meet or anticipate and dispose of ; make unnecessary (~ the necessity of going) **2** *obs* : OPPOSE SYN see PREVENT
ob·vi·a·tion \ˌäbvēˈāshən\ *n* **-S** [ME *obviacioun*, fr. LL *obviation-*, *obviatio*, fr. *obviatus* + *-ion-*, *-io* -ion] : an act or instance of obviating or being obviated
ob·vi·a·tive \ˈäbvēəd-ə-tiv\ *adj* [*obviate* + *-ive*] *of a grammatical form* : denoting the second of two third persons referred to in a context (as in the construction in some languages corresponding to "he held *his* [another's] horse") : compare PROXIMATE
²obviative \"\ *n* **-S** : an obviative grammatical form
ob·vi·ous \ˈäbvēəs *in rapid speech often* ˈäbvᵊ-\ *adj* [L *obvius*, fr. *obviam* in the way, towards, about to, fr. *ob* to, before, against + *viam*, accus. of *via* way, road — more at EPI-, VIA] **1 a** *obs* : presenting itself in the way : occurring often *b-archaic* : being in the way or to the front : OPPOSITE, FRONTING **c** : so placed as to be easily or inevitably perceived or noticed (an ~ light switch) **2** *archaic* : liable or exposed to some effect (as injury or mockery) : OPEN, SUBJECT **3** : capable of easy perception: **a** : readily perceived by the senses : hard not to perceive; easy of grasp (the invisible as opposed to the ~ —M.R.Cohen) **b** : readily and easily perceived by the sensibilities or mind ; requiring very little insight or reflection to perceive, recognize, or comprehend (all was taken in at a glance; the full purpose . . . was ~ —Herman Melville) **c** : easily understood ; requiring no thought or consideration to understand or analyze ; so simple and clear as to be unmistakable (poetry, in fact, whatever else it may or may not be, must be poetry—a sound, if ~, conclusion —C.D.Lewis) **d** : disappointingly simple and easy to discover or interpret ; wanting in any challenging or interesting complexity or ingenuity (the devices . . . are rather too ~ —Henry Adams) SYN see EVIDENT
ob·vi·ous·ly *adv* : in an obvious manner : CERTAINLY
ob·vi·ous·ness *n* **-ES** : the quality or state of being obvious
ob·vo·lute \ˈäbvəˌlüt *also* -ˌlyüt, *usu* -ədᵊ+V\ *adj* [L *obvolutus*, past part. of *obvolvere*] : OVERLAPPING, CONTORTED, CONVOLUTE
ob·volve \äbˈvälv\ *vt* **-ED/-ING/-S** [L *obvolvere* to roll around, wrap around, fr. *ob-* to, over + *volvere* to roll — more at OB-, VOLUBLE] *archaic* : ENWRAP
OC *abbr* ocean
OC *abbr* **1** of course **2** office copy **3** officer candidate

STUPEFY] : STUPEFY

obt *abbr* **1** obedient **2** [L *oblit*] he died

ob·tain \əb'tān-, äb-\ *vb* -ED/-ING/-S [ME *obteinen*, fr. MF & L; MF *obtenir*, fr. L *obtinēre* to take hold of, fr. *ob-* to, completely + *-tinēre* (fr. *tenēre* to hold) — more at OB-, THIN] *vt* **1 a** : to gain or attain possession or disposal of usu. by some planned action or method ⟨ability to doubt until evidence is ~*ed* —John Dewey⟩ ⟨~*ing* the information easily⟩ **b** : to bring about or call into being : EFFECT ⟨~ quiet for their annual meetings —*Amer. Guide Series: N.Y.City*⟩ **2** *obs* : HOLD, KEEP, POSSESS, OCCUPY ⟨he who ~*s* the monarchy of heaven —John Milton⟩ **3** *obs* : to arrive at : ATTAIN, REACH ~ *vi* **1** *archaic* : SUCCEED **2** *obs* : ATTAIN, ARRIVE — used with *to* or *unto* **3** : to have a firm footing : become recognized or established : be prevalent or general ⟨the custom ~*s* of going to the seashore in summer⟩ ⟨a greater degree of free expression than usually ~*s* in film production —Roger Manvell⟩ SYN see GET

ob·tain·able \-nəbəl\ *adj* : capable of being obtained : AVAILABLE

ob·tain·al \-nᵊl\ *n* -S [*obtain* + *-al*] : OBTAINMENT

ob·tain·er \-nə(r)\ *n* -S : one that obtains

ob·tain·ment \-mənt\ *n* -S **1** : the act or process of obtaining **2** : something that is obtained

obtd *abbr* obtained

EXHIBIT 16

Second College Edition

Heritage Dictionary

Houghton Mifflin Company BOSTON

Words that are believed to be registered trademarks have been checked with authoritative sources. No investigation has been made of common-law trademark rights in any word, because such investigation is impracticable. Words that are known to have current registrations are shown with an initial capital and are also identified as trademarks. The inclusion of any word in this Dictionary is not, however, an expression of the Publisher's opinion as to whether or not it is subject to proprietary rights. Indeed, no definition in this Dictionary is to be regarded as affecting the validity of any trademark.

Copyright © 1982 by Houghton Mifflin Company. All rights reserved. No part of this work may be reproduced or transmitted in any form or by any means, electronic or mechanical, including photocopying and recording, or by any information storage or retrieval system, except as may be expressly permitted by 1976 Copyright Act or in writing by the Publisher.

All correspondence and inquiries should be directed to
Reference Division, Houghton Mifflin Company
Two Park Street, Boston, MA 02108

Library of Congress Cataloging in Publication Data
Main entry under title:
American Heritage dictionary.
Rev. ed. of: American Heritage dictionary of the English language. New college ed. c1976.
1. English language—Dictionaries. I. Morris, William, 1913–
PE1625.A54 1982 423 82-9346
ISBN 0-395-32943-4
ISBN 0-395-32944-2 (thumb index)
ISBN 0-395-33959-6 (deluxe edition)

Manufactured in the United States of America

This material may be protected by Copyright law (Title 17 U.S. Code)

gol. **2. mongoloid.** Characterized by, affected with, or relating to Down's syndrome. —*n.* **1.** *Anthropol.* A member of the Mongoloid ethnic division of the human species. **2. mongoloid.** A person affected with Down's syndrome.

mon·goose (mŏng'gōōs', mŏn'-) *n., pl.* **-goos·es.** Any of various Old World carnivorous mammals of the genus *Herpestes* and related genera, having a slender body and a long tail and notable for being able to kill venomous snakes. [Marathi *mangūs*, of Dravidian orig.]

mon·grel (mŭng'grəl, mŏng'-) *n.* **1.** An animal or plant, esp. a dog, resulting from various interbreedings. **2.** A cross between two different breeds. —*adj.* Of mixed origin or character. [Prob. < ME *mong*, mixture < OE *(ge)mang.*] —**mon·grel'ism** *n.* —**mon'grel·ly** *adv.*

mon·grel·ize (mŭng'grə-līz', mŏng'-) *tr.v.* **-ized, -iz·ing, -iz·es.** To make mongrel in race, nature, or character. —**mon'grel·i·za'tion** *n.*

mon·ick·er (mŏn'ĭ-kər) *n.* Variant of **moniker.**

mon·ied (mŭn'ēd) *adj.* Variant of **moneyed.**

mon·ies (mŭn'ēz') *n.* A plural of **money.**

mon·i·ker or **mon·ick·er** (mŏn'ĭ-kər) *n. Slang.* A personal name or nickname. [Orig. unknown.]

mo·ni·li·a·sis (mō'nə-lī'ə-sĭs, mŏn'ə-) *n.* Candidiasis. [NLat. *Monilia*, fungus genus + -IASIS.]

mo·nil·i·form (mō-nĭl'ə-fôrm') *adj.* Resembling a string of beads, as various plant roots, the antennae of certain insects, and the nuclei of some members of the Ciliata. [Lat. *monile*, necklace + -FORM.] —**mo·nil'i·form'ly** *adv.*

mon·ish (mŏn'ĭsh) *tr.v.* **-ished, -ish·ing, -ish·es.** To admonish; warn [ME *moneven* < OFr *monester* < VLat. **monestare* < Lat. *monēre*, to warn.]

mo·nism (mō'nĭz'əm, mŏn'ĭz'əm) *n. Philos.* A metaphysical system in which reality is conceived as a unified whole. —**mo'nist** *n.* —**mo·nis'tic** (mō-nĭs'tĭk, mŏ-) *adj.* —**mo·nis'ti·cal·ly** *adv.*

mo·ni·tion (mō-nĭsh'ən, mə-) *n.* **1.** A warning or intimation of impending danger. **2. a.** An admonition. **b.** A piece of advice; counsel. **3.** A formal order from a bishop or ecclesiastical court to refrain from a specified offense. [ME *monicion* < OFr. *monition* < Lat. *monitio* < *monēre*, to warn.]

mon·i·tor (mŏn'ĭ-tər) *n.* **1.** One that admonishes, cautions, or reminds. **2.** A pupil who assists a teacher in routine duties. **3. a.** A device used to record or control a process or activity. **b.** A screen used to view or check the picture being picked up by a television camera. **4.** An articulated device holding a rotating nozzle, used in mining and fire-fighting. **5. a.** A heavily ironclad warship of the 19th century with a low, flat deck and one or more gun turrets. **b.** A modern warship designed for coastal bombardment. **6.** Any of various tropical carnivorous lizards of the genus *Varanus*, ranging in length from several inches to ten feet. —*v.* **-tored, -tor·ing, -tors.** —*tr.* **1.** To check (the transmission quality of a signal) by means of a receiver. **2.** To test for radiation intensity. **3.** To keep track of by or as if by an electronic device. **4.** To check by means of a receiver for significant content. **5.** To scrutinize or check systematically with a view to collecting certain specified categories of data. **6.** To keep watch over; supervise: *monitor an examination.* **7.** To direct as a monitor. —*intr.* To act as a monitor. [Lat. < *monēre*, to warn.]

mon·i·to·ri·al (mŏn'ĭ-tôr'ē-əl, -tōr'-) *adj.* Of, pertaining to, or performed by monitors. —**mon'i·to'ri·al·ly** *adv.*

mon·i·to·ry (mŏn'ĭ-tôr'ē, -tōr'ē) *adj.* Conveying an admonition or warning: *a monitory glance.* —*n., pl.* **-ries.** A letter of admonition. [Lat. *monitorius* < *monitor*, monitor.]

monk (mŭngk) *n.* A member of a religious brotherhood living in a monastery and devoted to a discipline prescribed by his order. [ME *munk* < OE *munuc* < LLat. *monachus* < LGk. *monakhos* < Gk., single < *monos*.]

monk·ery (mŭng'kə-rē) *n., pl.* **-ies.** **1.** Monastic life or practices. **2.** Monks collectively. **3.** A monastery.

mon·key (mŭng'kē) *n., pl.* **-keys.** **1.** A member of the order Primates, excluding man; specifically, most long-tailed primates, including the Old and New World monkeys and the marmosets, and usually excluding the anthropoid apes and the lemurs, lorises, tree shrews, and tarsiers. **2.** A mischievous, playful child or young person. **3.** The iron block of a pile driver. **4.** *Slang.* A person who is mocked, duped, or made to appear a fool. **5.** *Slang.* Drug addiction, regarded as a burdensome affliction: *have a monkey on one's back.* —*v.* **-keyed, -key·ing, -keys.** —*intr. Informal.* **1.** To play, fiddle, or tamper with something idly. **2.** To behave in a mischievous or apish manner. —*tr.* To imitate or mimic; ape. [Prob. of LG orig.]

monkey bread *n.* The fruit of the baobab.

monkey business *n. Slang.* Silly, mischievous, or deceitful acts.

mon·key-flow·er (mŭng'kē-flou'ər) *n.* Any of various plants of the genus *Mimulus*, having variously colored, two-lipped flowers.

monkey jacket *n.* **1.** A short, tight-fitting jacket, formerly worn by sailors. **2.** A mess jacket.

monkey pot *n.* **1. a.** The large, urn-shaped lidded pod of tropical trees of the genus *Lecythis*. **b.** A tree bearing this type of pod. **2.** A cylindrical or barrel-shaped melting pot used in making flint glass.



monkey *Callimico goeldi*



monkey wrench



monocle

monkey puzzle *n.* An evergreen tree, *Araucaria araucana*, native to Chile, having intricately ramifying branches covered with stiff, prickle-tipped leaves.

mon·key·shine (mŭng'kē-shīn') *n.* Often **monkeyshines.** *Slang.* A playful trick; prank.

monkey wrench *n.* **1.** A hand tool with adjustable jaws for turning nuts of varying sizes. **2.** *Informal.* Something that disrupts: *threw a monkey wrench into our plans.* [Orig. unknown.]

monk·fish (mŭngk'fĭsh') *n., pl.* **monkfish** or **-fish·es.** The goosefish. [From the cowled appearance of its head.]

Mon-Khmer (mŏn'kmĕr') *n.* A subfamily of the Austro-Asiatic language family that includes Mon, Khmer and other languages of Southeast Asia.

monk·hood (mŭngk'hŏŏd') *n.* **1.** The state or profession of a monk; monasticism. **2.** Monks collectively.

monk·ish (mŭng'kĭsh) *adj.* **1.** Of, relating to, or characteristic of monks or monasticism. **2.** Of or inclined to self-denial.

monk's cloth *n.* A heavy cotton cloth in a coarse basket weave.

monks·hood (mŭngks'hŏŏd') *n.* Any of various usually poisonous plants of the genus *Aconitum*, having hooded flowers of various colors.

mon·o[1] (mŏn'ō) *n.* Mononucleosis (sense 2).

mon·o[2] (mŏn'ō) *adj.* Monaural (sense 2).

mono- or **mon-** *pref.* **1.** One; single; alone: *monomorphic.* **2.** Containing a single atom, radical, or group: *monobasic.* **3.** Monomolecular; monatomic: *monolayer.* [ME < OFr. < Lat. < Gk. < *monos*, single, alone.]

mon·o·ac·id (mŏn'ō-ăs'ĭd) also **mon·o·a·cid·ic** (mŏn'ō-ə-sĭd'ĭk) *adj.* Having only one hydroxyl group to react with acids. —*n.* **monoacid.** An acid having one replaceable hydrogen atom.

mon·o·am·ine (mŏn'ō-ăm'ēn, -ə-mēn') *n.* An amine compound having one amino group.

monoamine oxidase *n.* An enzyme that acts as a catalyst in the oxidative deamination of monoamines.

mon·o·ba·sic (mŏn'ə-bā'sĭk) *adj.* **1.** Monoprotic. **2.** Having only one metal ion or positive radical.

mon·o·carp (mŏn'ə-kärp') *n.* A monocarpic plant.

mon·o·car·pel·lar·y (mŏn'ə-kär'pə-lĕr'ē) *adj.* Consisting of only one carpel.

mon·o·car·pic (mŏn'ə-kär'pĭk) also **mon·o·car·pous** (-kär'pəs) *adj.* Flowering and bearing fruit only once.

Mo·noc·er·os (mə-nŏs'ər-əs) *n.* **1.** A constellation near Canis Major and Canis Minor. **2. monoceros.** *Obs.* **a.** A one-horned fish, such as the swordfish. **b.** A unicorn. [ME, unicorn < OFr. < Lat. < Gk. *monokerōs*, having one horn : *monos*, one + *keras*, horn.]

mon·o·cha·si·um (mŏn'ə-kā'zē-əm, -zhē-əm) *n., pl.* **-si·a** (-zē-ə, -zhē-ə). A cyme having a single main stem. —**mon'o·cha'si·al** *adj.* [MONO- + (DI)CHASIUM.]

mon·o·chord (mŏn'ə-kôrd') *n. Mus.* An acoustical instrument consisting of a sounding box with one string and a movable bridge, used to study musical tones. [ME *monocorde* < OFr. < Med. Lat. *monochordum* < Gk. *monokhordon* : *monos*, one + *khordē*, string.]

mon·o·chro·mat·ic (mŏn'ə-krō-măt'ĭk) also **mon·o·chro·ic** (-krō'ĭk) *adj.* **1.** Having only one color. **2.** Having or producing light of only one wavelength. [Lat. *monochromatos* < Gk. *monokhrōmatos* : *monos*, one + *khrōma*, color.] —**mon'o·chro·mat'i·cal·ly** *adv.* —**mon'o·chro'ma·tic'i·ty** (-mə-tĭs'ĭ-tē) *n.*

mon·o·chrome (mŏn'ə-krōm') *n.* **1.** A painting done in different shades of one color. **2.** The technique of executing monochrome paintings. [Med. Lat. *monochroma* < Gk. *monokhrōmos*, of one color : *monos*, one + *khrōma*, color.] —**mon'o·chro'mic** (-krō'mĭk) *adj.*

mon·o·cle (mŏn'ə-kəl) *n.* An eyeglass for one eye. [Fr. < LLat. *monoculus*, having one eye : Gk. *monos*, one + Lat. *oculus*, eye.] —**mon'o·cled** (-kəld) *adj.*

mon·o·cline (mŏn'ə-klīn') *n.* A geologic formation in which all strata are inclined in the same direction. —**mon'o·cli'nal** *adj.*

mon·o·clin·ic (mŏn'ə-klĭn'ĭk) *adj.* Of or pertaining to three unequal crystal axes, two of which intersect obliquely and are perpendicular to the third.

mon·o·cli·nous (mŏn'ə-klī'nəs) *adj.* Having pistils and stamens in the same flower. [NLat. *monoclinus* : Gk. *monos*, one + Gk. *klinē*, couch.]

mon·o·coque (mŏn'ə-kōk', -kŏk') *n.* A metal structure, as of an aircraft, in which the covering absorbs a large part of the stresses to which the body is subjected. [Fr. : Gk. *monos*, one + *coque*, shell < Lat. *coccum*, berry < Gk. *kokkos*.]

mon·o·cot·y·le·don (mŏn'ə-kŏt'l-ēd'n) also **mon·o·cot** (mŏn'ə-kŏt') *n.* Any of various plants of the Monocotyledonae, one of the two major divisions of angiosperms, characterized by a single embryonic seed leaf that appears at germination. Included among the monocotyledons are such plants as grasses, orchids, and lilies. [NLat. *Monocotyledones*, class name : MONO- + Lat. *cotyledon*, navelwort. — see COTYLEDON.] —**mon'o·cot'y·le'don·ous** *adj.*

mo·noc·ra·cy (mō-nŏk'rə-sē, mə-) *n.* Government or rule by a single person; autocracy. —**mon'o·crat'** (mŏn'ə-krăt') *n.* —**mon'o·crat'ic** *adj.*

mo·noc·u·lar (mō-nŏk'yə-lər, mə-) *adj.* **1.** Having or per-

Case 1:04-cv-00874-GMS Document 108-8 Filed 03/04/2006 Page 9 of 37

EXHIBIT 17

US00RE36633E

United States Patent [19]

Fleischer et al.

[11] E Patent Number: Re. 36,633

[45] Reissued Date of Patent: Mar. 28, 2000

[54] **SYNCHRONOUS RESIDUAL TIME STAMP FOR TIMING RECOVERY IN A BROADBAND NETWORK**

[75] Inventors: **Paul E. Fleischer**, Little Silver; **Chi-Leung Lau**, Marlboro, both of N.J.

[73] Assignee: **Telcordia Technologies, Inc.**, Morristown, N.J.

[21] Appl. No.: **08/555,196**

[22] Filed: **Nov. 8, 1995**

Related U.S. Patent Documents

Reissue of:

[64] Patent No.: **5,260,978**
Issued: **Nov. 9, 1993**
Appl. No.: **07/969,592**
Filed: **Oct. 30, 1992**

[51] **Int. Cl.**[7] **H04L 7/00**

[52] **U.S. Cl.** **375/354**; 375/362; 375/364; 370/509; 370/394; 370/516

[58] **Field of Search** 375/354, 355, 375/362, 365, 366, 371, 364; 370/503, 509, 510, 511, 512, 516, 394, 517, 519

[56] **References Cited**

U.S. PATENT DOCUMENTS

4,489,421	12/1984	Burger .
4,530,091	7/1985	Crockett .
4,759,014	7/1988	Decker et al. .
4,961,188	10/1990	Lau .
5,115,431	5/1992	Williams et al. .
5,255,291	10/1993	Holden et al. .

FOREIGN PATENT DOCUMENTS

3-114333	5/1991	Japan .

OTHER PUBLICATIONS

CCITT Study Group XVIII/8—Contribution D. 1123 entitled "Proposed method to provide the clock recovery function for circuit emulation", (Dec. 1990).

Letter from P. Adam of CNET dated Aug. 26, 1991 concerning discussion on TS/SFET.

Memorandum from R. Lau and B. Kittams of Bellcore dated Oct. 11, 1991 re A Compromise of SFET and TS.

Memorandum from T. Houdoin to B. Kittams & R. Lau dated Oct. 14, 1991 re Compromise SFET/TS.

CNET Memorandum from T. Houdoin to R. Lau and B. Kittams re Compromise SFET/TS (undated).

Y. Matsuura, S. Kozuka, K. Yuki, "Jitter Characteristics of Pulse Stuffing Synchronization," pp. 259–264, Jun. 1968.

D.L. Duttweiler, "Waiting Time Jitter," *Bell System Technical Journal*, vol. 51, No. 1, pp. 165–209, Jan. 1972.

CCITT Recommendations G. 707, G. 708, G. 709 (1988).

(List continued on next page.)

Primary Examiner—Don N. Vo
Attorney, Agent, or Firm—Joseph Giordano

[57] **ABSTRACT**

A Residual Time Stamp (RTS) technique provides a method and apparatus for recovering the timing signal of a constant bit rate input service signal at the destination node of a synchronous ATM telecommunication network. At the source node, a free-running P-bit counter counts cycles in a common network clock. At the end of every RTS period formed by N service clock cycles, the current count of the P-bit counter, defined as the RTS, is transmitted in the ATM adaptation layer. Since the absolute number of network clock cycles likely to fall within an RTS period will fall within a range determined by N, the frequencies of the network and service clocks, and the tolerance of the service clock, P is chosen so that the 2_P possible counts, rather than representing the absolute number of network clock cycles an RTS period, provide sufficient information for unambiguously representing the number of network clock cycles within that predetermined range. At the destination node, a pulse signal is derived in which the periods are determined by the number of network clock cycles represented by the received RTSs. This pulse signal is then multiplied in frequency by N to recover the source node service clock.

33 Claims, 3 Drawing Sheets

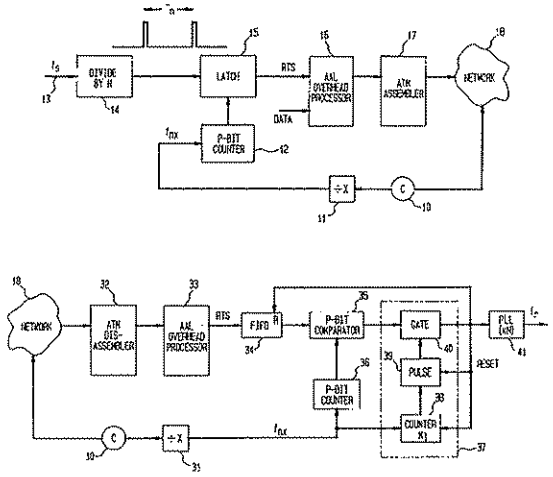

OTHER PUBLICATIONS

CCITT Recommendations G. 823, G. 824 (1988).
CCITT Recommendations D.294, "Timing for CBO Services," Jun. 1989.
R.C. Lau, "Synchronous Frequency Encoding Technique for B–ISDN Circuit Emulation," SPIE vol. 1179 Fiber Networking and Telecommunications, pp. 160–171, Sep. 1989.
H.M. Ahmed, "Adaptive Terminal Synchronization in Packet Data Networks," Globecom, pp. 20.6.1–20.6.5, 1989.
CCITT SG XVIII Contribution, D.1020, "Timing Recovery for CBR Circuit Emulation." Dec. 1990.
CCITT Study Group XVIII—Contribution D. 1451 entitled "Performance Comparison of Timing Recovery Methods for CBR Services," Jun. 1991.
Submission to T1S1 entitled "Broadband Aspects of ISDN," T1S1.5/91–382, Nov. 4, 1991.
Summary Minutes of T1 Services, Architecture, and Signaling Technical Subcommittee (T1S1) Session, Nov. 8, 1991.
CCITT Study Group XVIII entitled "Synchronous Residue–Time Stamp: A Combination of SFET/TS", Dec. 1991.
CCITT Study Group XVIII entitled "Report of the meeting of SWP XVIII/8–3 (Services, IVS and AAL types 1 and 2)", Dec. 1991.
CCITT Study Group XVIII entitled "Revised text of I.363 Section 2 (AAL type 1)", Dec. 1991.
CCITT Recommendation I.363 entitled "B–ISDN ATM Adaptation Layer (AAL) Specification," (1991).
Appendix 5 (to Annex 7) for COM XVIII–R 70–E entitled "Descriptions of the SFET Method" (Jul. 1991).
Appendix 6 (to Annex 7) for COM XVIII–R 70–E entitled "Descriptions of the TS Method" (Jul. 1991).
R.C. Lau and P.E. Fleischer, "Synchronous Techniques for Timing Recovery in BISDN," *IEEE Globecom*, pp. 814–820, Dec. 1992.
R.C. Lau and P.E. Fleischer, "Synchronous Techniques for Timing Recovery in BISDN," Communications Switching of the IEEE Communications Society, IEEE Transactions on Communications, Apr. 1995.
Kozuka, "Phase Controlled Oscillator for Pulse Stuffing Synchronization System," Review of the Electrical Communications Laboratory, vol. 17, Nos. 5–6, May–Jun. 1969.
R.P. Singh et al., "Jitter and Clock Recovery for Periodic Traffic in Broadband Packet Networks," Bell Communications Research, Inc., presented at IEEE Globecom, Florida, Dec. 1988.
J. Gonzales et al., Proceedings ICC '91, "Jitter Reduction in ATM Networks," 1991, pp. 274–279.
R.P. Singh et al., "Adaptive Clock Synchronization Schemes for Real–Time Traffic in Broadband Packet Networks," Presented–8th European Conference on Electrotechnics, Stockholm, Sweden, Jun. 1988.
American National Standard, ANSI T1.105–1988, "Digital Hierarchy Optical Interface Rates and Formats Specification," Sep. 1988.
"Jitter Reduction in ATM Networks," Julio Gonzales and Jean–Paul Le Meur Proceedings ICC '91, 9.4.1–9.4.6.

FIG. 1

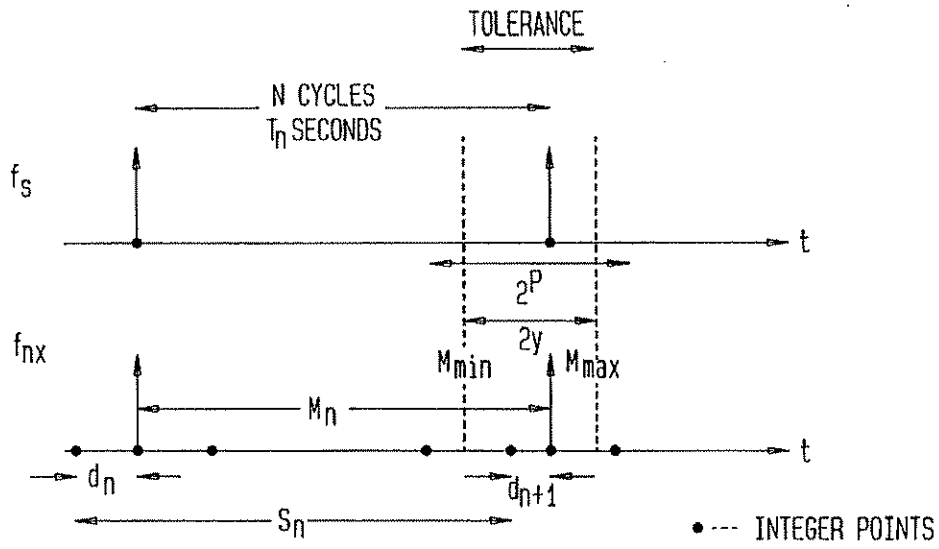
TOLERANCE
N CYCLES
T_n SECONDS
f_s
t
2^P
2y
f_{nx}
M_{min}
M_{max}
M_n
t
d_n
d_{n+1}
S_n
INTEGER POINTS

FIG. 4

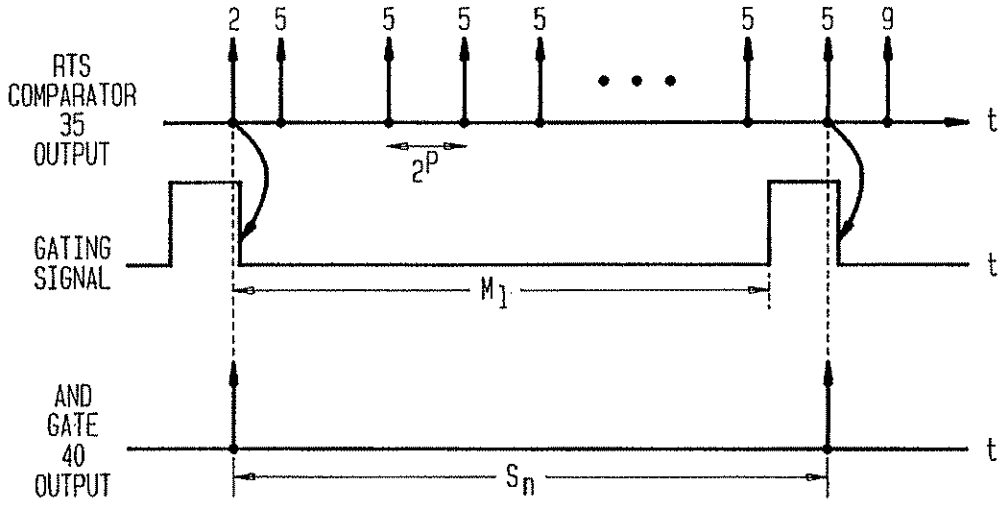
2 5 5 5 5 5 5 9
RTS COMPARATOR 35 OUTPUT
t
2^P
GATING SIGNAL
t
M_1
AND GATE 40 OUTPUT
t
S_n

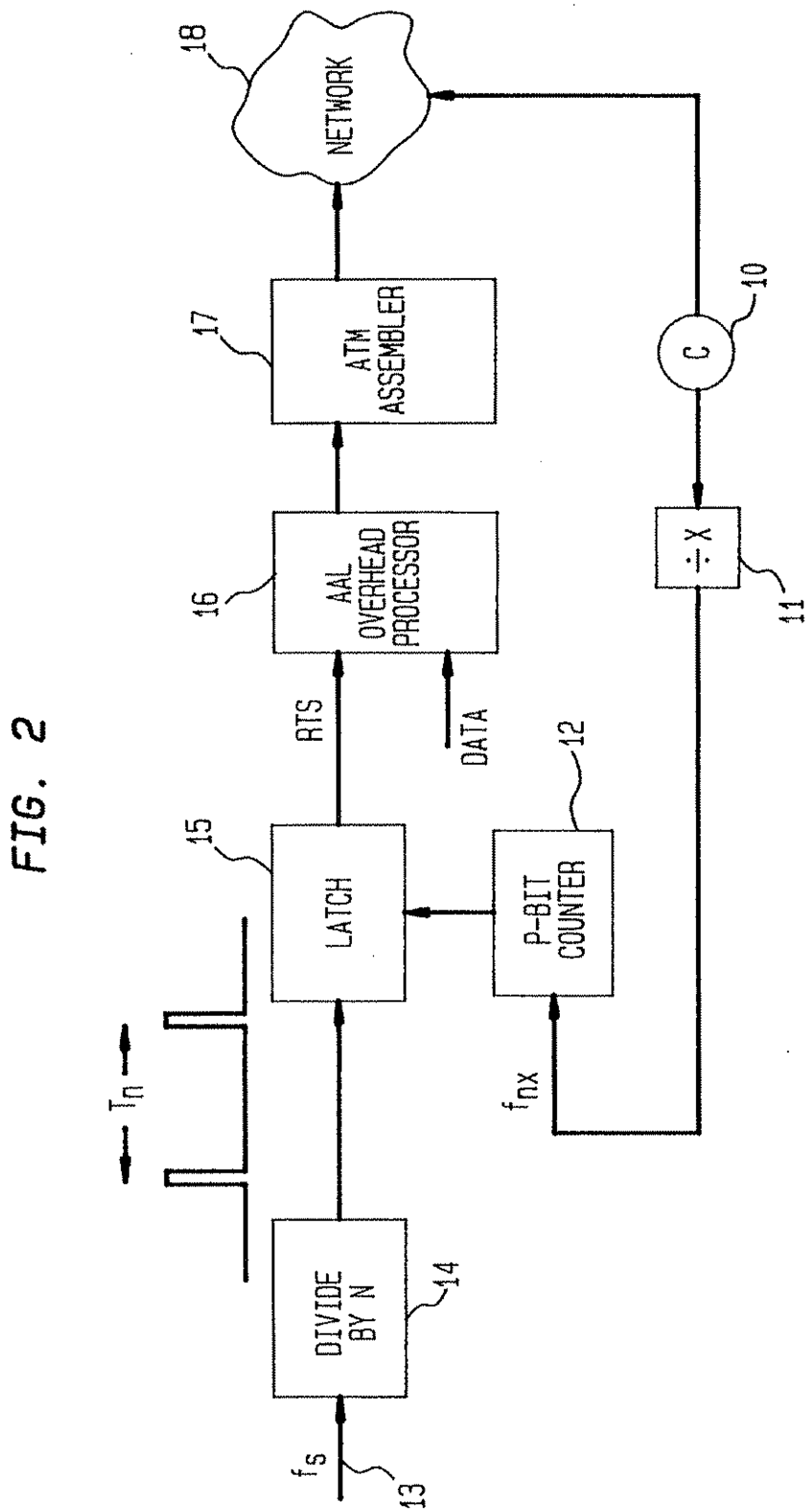
18
NETWORK
17
ATM ASSEMBLER
16
AAL OVERHEAD PROCESSOR
RTS
DATA
15
LATCH
12
P-BIT COUNTER
10
C
÷ X
11
T_n
f_{nx}
DIVIDE BY N
14
f_s
13

FIG. 2

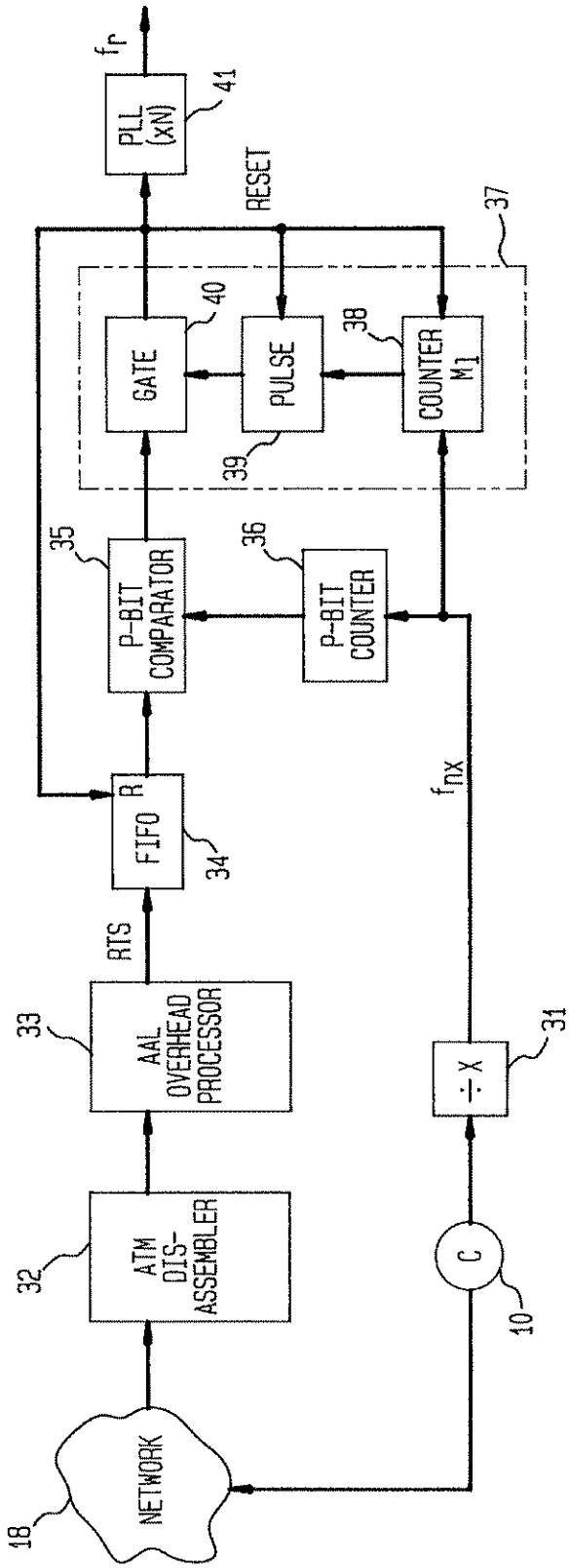
f_r
PLL (xN)
41
RESET
37
GATE
40
PULSE
38
COUNTER M1
39
P-BIT COMPARATOR
35
P-BIT COUNTER
36
R
FIFO
34
f_{nx}
RTS
AAL OVERHEAD PROCESSOR
33
÷ X
31
ATM DIS-ASSEMBLER
32
C
10
NETWORK
18

FIG. 3

SYNCHRONOUS RESIDUAL TIME STAMP FOR TIMING RECOVERY IN A BROADBAND NETWORK

Matter enclosed in heavy brackets [ ] appears in the original patent but forms no part of this reissue specification; matter printed in italics indicates the additions made by reissue.

This application is the parent application of reissue application 09/292,668 filed Apr. 16, 1999.

BACKGROUND OF THE INVENTION

This invention relates to timing recovery of a source node service clock frequency at a destination node in a broadband asynchronous transfer mode (ATM) network where the source and destination nodes receive reference timing signals derived from a single master clock.

Asynchronous Transfer Mode (ATM) is a packet oriented technology for the realization of a Broadband Integrated Services Network (BISDN). By using ATM, network resources can be shared among multiple users. Moreover, various services including voice, video and data can be multiplexed, switched, and transported together under a universal format. Full integration will likely result in simpler and more efficient network and service administration and management. However, while conventional circuit-switching is optimized for real-time, continuous traffic, ATM is more suitable for the transport of bursty traffic such as data. Accommodation of constant bit rate (CBR) services is, however, an important feature of ATM, both for universal integration and for compatibility between existing and future networks. In the transport of a CBR signal through a broadband ATM network, the CBR signal is first segmented into 47-octet units and then mapped, along with an octet of ATM Type I Adaptation Layer (AAL) overhead, into the 48-octet payload of the cell. The cells are then statistically multiplexed into the network and routed through the network via ATM switches.

It is essential to the proper delivery of such CBR service traffic in a broadband network that the clock controlling the destination node buffer be operating at a frequency precisely matched to that of the service signal input at the source node in order to avoid loss of information due to buffer over- or under-flow. However, unlike the circuit-switched transport of service data wherein the clock frequency at the destination node may be traced directly back to that of the source node by the regular, periodic arrival of the CBR traffic, transport in an ATM network inherently results in cell jitter, i.e. the random delay and aperiodic arrival of cells at a destination node, which essentially destroys the value of cell arrival instances as a means for directly recovering the original service signal input frequency.

Such cell jitter, generally the result of the multiplexing of transport cells in the broadband network and the cell queuing delays incurred at the ATM switches in the network, is substantially unpredictable. Thus, little is known about the cell arrival time beyond the fact that the average cell delay is a constant, assuming that the ATM network provides sufficient bandwidth to ensure against loss of cells within the network. As a means for closely approximating the service signal frequency at the destination node, some consideration had previously been given to utilizing a direct extension of circuit-switched timing recovery practices which rely entirely upon a buffer fill signal as the basis for recovery of the source timing. However, due to the lack of knowledge of statistics of the cell jitter, this approach would have required a phase-locked loop with very low cut-off frequency (in the order of a few Hz) and would thus have resulted in excessive converging time and degradation of jitter and wander performance.

A number of schemes have been proposed to improve upon such a conventional manner of recovering service timing in the presence of cell jitter, yet none has achieved this end economically and without extensive control systems of notable complexity. Singh et al., for example, in "Adaptive Clock Synchronization Schemes For Real-Time Traffic In Broadband Packet Networks," 8th European Conference on Electrotechnics, Stockholm, Sweden, June 1988, and "Jitter And Clock Recovery For Periodic Traffic In Broadband Packet Networks," IEEE Globecom '88, Florida, December 1988, have proposed algorithms which attempt to more closely estimate cell jitter statistics and derive timing recovery from those indications. These adaptive approaches, suggested to be applicable to both synchronous and non-synchronous networks, rely upon the interaction of increasingly complex algorithms which would require the noted extensive controls for implementation.

These prior art schemes described above can be classified as non-synchronous techniques, which are based on the simple fact that the expected value of the network cell jitter is zero and thus rely on phase filtering. Synchronous techniques, on the other hand, utilize the fact that common timing is available at both the transmitter and the receiver. In a synchronous broadband ATM network, such as the Synchronous Optical Network (SONET) prescribed by American National Standard, ANSI T1.105-1988, "Digital Hierarchy Optical Interface Rates and Formats Specification," Mar. 10, 1988, the network source and destination node control clocks are synchronized to the same timing reference. As a result, there is no necessity for relying upon any extraneous phenomenon such as instants of cell arrival to provide a datum base for determining the relative frequencies of those control clocks. The effect of cell jitter caused by multiplexing and switching delays in the network is therefore of little consequence in any procedure for circuit transporting CBR service, which is based, as is the present invention, on an actual synchrony of node timing. Thus being devoid of concern for cell jitter, this process is free to simply determine the difference in frequency between the CBR service signal input at the source node and the source/destination node timing clock(s).

U.S. Pat. No. 4,961,188 issued on Oct. 2, 1990 to Chi-Leung Lau, co-inventor herein, discloses a synchronous frequency encoding technique (SFET) for clock timing in a broadband network. The SFET takes advantage of the common timing reference at both the source and the receiver. At the source, the asynchronous service clock is compared to the network reference clock. The discrepancy between properly chosen submultiples of the two clocks is measured in units of a preassigned number of slip cycles of network clock. This clock slip information is conveyed via a Frequency Encoded Number (FEN) which is carried in the ATM Adaptation Layer (AAL) overhead. At the receiver, the common network clock and the FEN are used to reconstruct the service clock. This timing recovery process does not rely on any statistics of the cell jitter except that it has a known, bounded amplitude. Therefore, the recovered clock has jitter performance comparable to that of the circuit-switched network.

An alternative proposed approach is known as Time Stamp (TS). In the Time Stamp approach (see, for example, Gonzales et al, "Jitter Reduction in ATM Networks", Proceedings ICC'91, 9.4.1–9.4.6), the network clock is used to

drive a multi-bit counter (16-bits in the proposal), which is sampled every fixed number of generated cells (e.g., 16). Thus, a fixed number, N, of service clocks cycles is used as the measuring yardstick. The sampled value of the 16-bit counter is the TS that inherently conveys the frequency difference information. Because of the size of the TS (2 octets), it has been proposed that the TS be transmitted via the Convergence Sublayer (CS) overhead. Thus the TS is a 16-bit binary number occurring once every N service clock cycles. Differences in successive TSs represent the quantized values of M, where M is the number of network clock cycles during the fixed TS period. At the receiver, the TS period is reconstructed from the received TSs and the network clock. A free-running 16-bit counter is clocked by the network clock and the output of the counter is compared to the received TSs which are stored in a TS FIFO. A pulse is generated whenever there is a match between the TS and the 16-bit counter. The service clock is recovered by supplying the resultant pulse stream as the reference signal to a multiply-by-N phase locked loop (PLL).

A comparison of the SFET approach and the TS approach reveals advantages and disadvantages for each. In the SFET approach there is a relatively stringent requirement on the derived network clock since it must be slightly larger than the service clock. Advantageously, however, a convergence sublayer is not required to transmit the FEN and only small overhead bandwidth is required to transmit the necessary information. On the other hand, the TS approach is more flexible in that it does not require stringent relationships between the service clock and the network derived clock and can therefore support a range of service bit rates. Disadvantageously, however, a rigid convergence sublayer structure is required to transmit the TS, which adds complexity and makes inefficient use of the overhead bandwidth.

An object of the present invention is to achieve synchronous timing recovery with an approach that has the advantages of both the SFET and TS approaches, specifically, the efficiency of SFET and the flexibility of TS.

SUMMARY OF THE INVENTION

As described hereinabove, the TS approach requires a large number of bits (16-bits in the example), to represent the number of network clock cycles within a time interval defined by a fixed number (N) of service clock cycles. In accordance with the present invention, the number of bits required to represent the number of network clock cycles within that time interval is substantially reduced. This is possible through the realization that the actual number of network clock cycles, M (where M is not necessarily an integer), deviates from a nominal known number of cycles by a calculable deviation that is a function of N, the frequencies of the network and service clocks, and the tolerance of the service clock. Specifically, therefore, rather than transmitting a digital representation of the quantized actual number of network clock cycles within the interval, only a representation of that number as it exists within a defined window surrounding an expected, or nominal, number of network clock pulses is transmitted from a source node to a destination node in an ATM network. This representation will be referred to hereinafter as the Residual Time Stamp (RTS). By selecting the number of bits, P, so that all 2_P possible different bit patterns uniquely and unambiguously represent the range of possible numbers of network clock cycles within the fixed interval that is defined by N service clock cycles, the destination node can recover the service clock from the common network clock and the received RTS.

At the source node, a free-running P-bit counter counts clock cycles in a clock signal derived from the network clock. The service clock, which is derived from the incoming data signal to be transmitted over the ATM network, is divided by the factor of N to produce a pulse signal having a period (the RTS period) which defines the time interval for measuring the number (modulo 2^P) of derived network clock pulses. At the end of each RTS period, the current count of the free-running P-bit counter is sampled. That sampled value is the RTS, which is transmitted via the adaptation layer. Since the service clock from which the RTS period is defined and the derived network clock are neither synchronized nor integrally related in frequency, the actual number of derived network clock cycles in a RTS period is unlikely to be an integer. Thus, when sampled at the end of each RTS period, the increment in the count of the P-bit counter is a quantized version of the count (modulo 2^P) of pulses in the RTS interval as modified by any accumulated fractional counts from a previous interval.

At the destination node, after the AAL is processed, the successive RTSs are converted into a pulse signal which has periods between pulses defined by the fixed integral numbers of derived network clock pulses that correspond to the conveyed RTS periods. Specifically, a free-running P-bit counter is driven by the derived network clock. A comparator compares this count with a stored received RTS and produces a pulse output upon a match. Since the count of the P-bit counter matches the stored RTS every 2_P derived network clock cycles, comparator output pulses that do not actually represent the end of the RTS period are inhibited by gating circuitry. This gating circuitry includes a second counter that counts the derived network clock cycles occurring since the end of the previous RTS period. When this second counter reaches a count equal to the minimum possible number of derived network clock pulses within an RTS period, the next comparator pulse output produced upon a match between the RTS and the count of the P-bit counter, is gated-through to the output and resets the second counter. The resultant gated through output pulse stream drives a multiply-by-N phase locked loop to recover the service clock.

BRIEF DESCRIPTION OF THE DRAWING

FIG. **1** are timing diagrams showing the RTS concept of the present invention;

FIG. **2** is a block diagram showing apparatus, in accordance with the present invention, for generating the RTS at the source node of an ATM network;

FIG. **3** is a block diagram showing apparatus, in accordance with the present invention, for reconstructing the service clock at the destination node of an ATM network; and

FIG. **4** are timing diagrams showing the gating function at the apparatus of FIG. **3**.

DETAILED DESCRIPTION

The concept of the Residual Time Stamp is described with reference to FIG. **1**. In FIG. **1**, and in the description hereinafter, the following terminology is used:

f_n—network clock frequency, e.g. 155.52 MHz;

f_{nx}—derived network clock frequency,

$$f_{nx} = \frac{f_n}{x},$$

where x is a rational number;

f_s—service clock frequency;

N—period of RTS in units of the service clock (f_s) cycles;

T_n—the n-th period of the RTS in seconds;

$\pm\epsilon$—tolerance of the source clock frequency in parts per million;

M_n (M_{nom}, M_{max}, M_{min})—number of f_{nx} cycles within the n-th (nominal, maximum, minimum) RTS period, which are, in general, non-integers.

As can be noted in FIG. **1**, during the n-th period, T_n, corresponding to N service clock cycles, there are M_n network derived clock cycles. As aforenoted, since the service clock and the network clock are neither synchronized nor integrally related in frequency, this number of derived network clock cycles is not an integer. Since all practical timing recovery techniques transmit only integer values, the fractional part of M_n must be dealt with. Simple truncation or rounding of the fractional part in each RTS time slot is not permissible, as this would lead to a "random walk" type error accumulation. Rather, it is necessary to accumulate the fractional parts at the transmitter and use the accumulated value to modify the transmitted integer quantity. Since it is most convenient to generate RTS by an asynchronous counter, as will be described hereinafter in conjunction with the description of FIG. **2**, a "truncation" operation is natural, reflecting the fact that an asynchronous counter's output does not change until the subsequent input pulse arrives. To formalize these notions, S_n is defined as the truncated value of M_n after accounting for the left over fractional part, d_n, from the (n−1)-th interval, viz.,

$$S_n=[M_n+d_n] \tag{1}$$

and

$$d_{n+1}=d_n+M_n-S_n \tag{2}$$

where [a] denotes the largest integer less than or equal to a. Since for accurate clocks, the range of M_n, is very tightly constrained, i.e., $M_{max}-M_{min}=2y<M_n$, the variation in S_n is also smaller than its magnitude. It follows from Equation (1) that

$$[M_{min}+d_n]\cong S_n\cong[M_{max}+d_n] \tag{3}$$

Since the maximum and minimum of d_n are 1 and 0 respectively, S_n is bounded by,

$$[M_{min}]\cong S_n\cong[M_{max}]+1 \tag{4}$$

This implies, that the most significant portion of S_n carries no information and it is necessary to transmit only its least significant portion. This, therefore, is the essential concept of the RTS. The minimum resolution required to represent the residual part of S_n unambiguously is a function of N, the ratio of the network derived frequency to the service frequency, and the service clock tolerance, $\pm\epsilon$. The maximum deviation, y, between the nominal number of derived network clock pulses in an RTS period, M_{nom}, and the maximum or minimum values of M (M_{max} or M_{min}) is given by,

$$y = N \times \frac{f_{nx}}{f_s} \times \varepsilon \tag{5}$$

where M_{nom} equals

$$N \times \frac{f_{nx}}{f_s}.$$

A specific numerical example can be considered for clarity of understanding. As illustrative derived network clock frequency and service clock frequencies could be given by f_{nx}=155.52 MHZ (for x=1), and f_s=78.16 MHz (nominal), respectively. A typical RTS sampling period (N) is 3008, which corresponds to a period of 8 cells and a 47-octet payload per cell (47 bytes/cell×8 bits/byte×8 cells per RTS period). Using these numbers, M_{nom}=5985.2119. If it is further reasonable to assume that the service clock tolerance is 200 parts per million, i.e., $\pm 200\times10^{-6}$. From equation (5), therefore, y=1.197, which demonstrates that it is superfluous to transmit the full S_n in each RTS sampling period and transmission of the last few (P) bits of S_n is sufficient. This P-bit sample is the Residual-TS (RTS).

FIG. **2** is a block diagram of the source node of an ATM network showing apparatus for generating and transmitting the RTS. The basic network clock, C, shown at **10**, serves as the reference for timing of all nodes of the synchronous network being here considered. This clock, having a frequency f_n, is divided in frequency by a rational factor x by a divider **11** to produce a derived network clock having a frequency f_{nx}. Preferably, x would be an integer value. The dividing factor is chosen so that the P bits available can unambiguously represent the number of derived network clock cycles within an RTS period. In the case where

$$\frac{f_{nx}}{f_s}$$

is less than or equal to two, as in the example above, it can be shown that a 3-bit RTS is sufficient.

The derived network clock, f_{nx}, drives a P-bit counter, which is continuously counting these derived network clock pulses, modulo 2^P. The service clock, f_s, on lead **13**, which is derived from the service data signal (not shown) to be transmitted over the ATM network, is divided in frequency by N, the desired RTS period in units of f_s cycles, by divide-by N circuit **14**. As shown in FIG. **2**, the output of divider **14** is a pulse signal in which T_n is its n-th period. At every T seconds (N source clock cycles) latch **15** samples the current count of counter **12**, which is then the P-bit RTS to be transmitted. As aforedescribed, this number represents the residual part of S_n and is all that is necessary to be transmitted to recover the source clock at the destination node of the network.

Each successive RTS is incorporated within the ATM adaptation layer overhead by AAL processor **16**. The associated data to be transmitted (not shown) is also processed by processor **16** to form the payload of the cells, which are then assembled by an ATM assembler **17**, which adds an ATM header for transmission over the network **18**.

With reference again to the previous example, a four-bit counter (P=4) can be assumed to be used. Since M_{nom}= 5985.2119 and 5985.2119 (modulo 16)=1.2119, a typical RTS output sequence when the source is at nominal frequency will be as follows;

. . . 5,6,7,9,10,11,12,13,15,1,2, . . .

Since the counter **16**, in effect, quantizes by truncation, the RTS changes only by integer values. The changes in RTS are

such that their average is exactly equal to M_{nom} (modulo 2^P). In this example, the changes are either 1 or 2 with the change of 2 occurring either every 4 or 5 RTSs in such a way that the average interval is 1/0.2119=4.7198. In general, successive RTSs are related by

$$RTS_{n+1}=RTS_n+S_n=RTS_n+[d_n+M_n](\text{modulo } 2^P) \quad (6)$$

In order to guarantee that no information is lost due to the modulo arithmetic, i.e., that the transmitted RTS represents S_n unambiguously, it can be seen from equation (4) that the number of bits used for transmission must satisfy:

$$2_P \geq [M_{max}]-[M_{min}]+2 \quad (7)$$

Thus, in the example above, the number of bits allocated to the RTS must be 3 or greater. It can be noted that the number of bits necessary to unambiguously represent the number of derived network clock cycles within the RTS period is substantially less than the number of bits that would be required to represent the absolute number of clock cycles within the same interval. In the example above, for example, a 13-bit number would be required to represent M_{nom}.

If equation (7) is satisfied, knowledge of M_{nom} in the receiver at the destination node along with the received RTSs can be used to reproduce the service clock from the synchronous network clock. FIG. **3** shows one receiver implementation for reproducing the service clock from the received RTSs. At the receiver the common network clock **10** is available as it was at the transmitter. As in the transmitter, a divider **31** divides the network clock frequency, f_n by the same factor of x as divider **11** in the source node, to produce the same derived network clock signal having a frequency f_{nx} as was used by the transmitter at the source node of FIG. **2**.

In a structure paralleling the transmitter in FIG. **2**, a disassembler **32** processes the ATM headers received from the network **18** and passes the payload to an AAL processor **33**. In addition to extracting the transmitted data (not shown), processor **33** extracts the periodic transmitted RTSs, which are sequentially stored in a FIFO **34**, which is used to absorb the network cell jitter. The earliest received RTS in FIFO **34** is compared by P-bit comparator **35** with the count of a free running P-bit counter **36**, driven by the derived network clock, f_{nx}. Whenever the output of counter **36** matches the current RTS, comparator **35** generates a pulse. Since counter **36** is a modulo 2_P counter, the RTS in FIFO **34** matches the count of counter **36** every 2_P derived network clock pulses, f_{nx}. The output of comparator **35** thus consists of a train of pulses that are separated, except for the first pulse, by 2_P cycles of the derived network clock. In order to select the output pulse of comparator **35** that corresponds to the end of the fixed period of the transmitted service clocks, which is the period per RTS to be recovered, gating circuitry **37** is employed. Gating circuitry **37**, which includes a counter **38**, a gating signal generator **39**, and an AND gate **40**, gates only that pulse output of comparator **35** produced after counting, from the last gated output pulse, a minimum number, M_l, of derived network clock cycles. This minimum number, M_l, is given by:

$$M_l=[M_{nom}]-2^{(P-1)} \quad (8)$$

This ensures that $[M_{max}]-2_P<M_l<[M_{min}]$, and thus the gating pulse is guaranteed to select the correct RTS.

The gating function is best explained in conjunction with the timing diagrams of FIG. **4**. Initially, it can be assumed

that gating signal generator **39** is set to keep AND gate **40** open. Comparator **35** compares the first RTS in FIFO **34** with the free-running count of counter **36**. When the count of counter **36** matches this first RTS, shown in FIG. **4** as "2", comparator **35** produces a pulse which is gated through AND gate **40**. This gated output pulse resets gating signal generator **39** thereupon turning off AND gate **40**, resets the counter of counter **38** to zero, and reads the next stored RTS, "5", in FIFO **34**. When counter **36** reaches the count of "5", comparator **35** produces another output pulse. AND gate **40**, however, is OFF and remains off until counter **38** counts M_l derived network clock cycles. Therefore, as noted in FIG. **4**, all the subsequent matches of the RTS, "5" and the count of counter **36**, which occur every 2_P derived network clock cycles, are blocked by AND gate **40**. These subsequent pulses are blocked until counter **38** reaches a count of that minimum number of clock cycles that can comprise the fixed interval to be recovered from the RTS. After counting M_l derived network clock cycles, counter **38** generates a pulse which signals gating signal generator **39** to open AND gate **40**. The next pulse produced by comparator **35** upon the match between the RTS in FIFO **34** and the count of counter **36** is gated through AND gate **40**. This pulse, as before, resets counter **38**, resets gating signal generator **39**, and reads-in the next stored RTS to the output of FIFO **34**. The resultant time difference between output pulses of AND gate **40** is the desired fixed time interval, S_n, to be recovered from the transmitted RTSs. As previously defined in equation (1), S_n is the truncated value in the nth interval, after accounting for a left over portion from the (n−1)-th interval, of the actual number of derived network clock cycles within the fixed interval defined by N source clock cycles. As can be noted, S_n modulo (2^P) is equal to the difference of the RTSs associated with the pulses matched by comparator **35** right before and right after the reset. Thus in FIG. **4**, for the n-th period, this is the difference between "5" and "2", or "3", and for the (n+1)-st period, this is the difference between "9" and "5" or "4". The resultant pulse train at the output of gating circuitry **37** can be seen to duplicate the signal at the source node of the network, which is defined by N service clock cycles, as modified by the quantization effect of the RTSs. This pulse stream is input to a multiply-by N phase-locked loop **41** which multiplies the frequency by the factor of N and smooths out the variation of the reproduced periods. The resultant output clock signal, f_r, is the reproduced service timing signal, which can be employed by the circuitry at the destination node.

The above-described embodiment is illustrative of the principles of the present invention. Other embodiments could be devised by those skilled in the art without departing from the spirit and scope of the present invention.

What is claimed is:

1. A method of recovering, at a destination node of a packet-based telecommunications network, the timing clock of a service input at a source node of said packet-based telecommunications network, the destination node and the source node having a common network clock, comprising the steps of:

(a) at the source node, dividing the timing clock of the service input by a factor of an integer N to form residual time stamp (RTS) periods;

(b) at the source node, counting the network clock cycles modulo 2^P, where 2_P is less than the number of network clock cycles within an RTS period and P is chosen so that the 2_P counts uniquely and unambiguously represent the range of possible network clock cycles within an RTS period;

(c) transmitting from the source node to the destination node an RTS at the end of each RTS period that is equal to the modulo 2_P count of network clock cycles at that time;

(d) determining from the RTSs received at the destination node, the number of network clock cycles in each RTS period;

(e) generating a pulse signal from the network clock at the destination node in which the period between each pulse in the pulse signal equals the determined number of network clock cycles in the corresponding RTS period; and

(f) multiplying the frequency of the pulse signal generated in step (e) by the same factor of an integer N used in step (a) to recover the timing clock of the service input.

2. The method of claim 1 wherein the network clock frequency is less than or equal to twice the service clock frequency.

3. A method of recovering, at a destination node of a packet-based telecommunications network, the timing clock of a service input at a source node of said packet-based telecommunications network, the destination node and the source node having a common network clock, comprising the steps of:

(a) at the source node, dividing the timing clock of the service input by a factor of an integer N to form residual time stamp (RTS) periods;

(b) at the source node, dividing the network clock by a rational factor to form a derived network clock;

(c) at the source node, counting the derived network clock cycles modulo 2^P, where 2_P is less than the number of derived network clock cycles within an RTS period and P is chosen so that the 2_P counts uniquely and unambiguously represent the range of possible derived network clock cycles within an RTS period;

(d) transmitting from the source node to the destination node an RTS at the end of each RTS period that is equal to the modulo 2_P count of derived network clock cycles at that time;

(e) at the destination node, dividing the network clock by the same rational factor used at the source node to form a derived network clock equal to the derived network clock at the source node;

(f) determining from the RTSs received at the destination node, the number of derived network clock cycles in each RTS period;

(g) generating a pulse signal from the derived network clock at the destination node in which the period between each pulse in the pulse signal equals the determined number of derived network clock cycles in the corresponding RTS period; and

(h) multiplying the frequency of the pulse signal generated in step (g) by the same factor of an integer N used in step (a) to recover the timing clock of the service input.

4. The method of claim 3 wherein the derived network clock frequency is less than or equal to twice the service clock frequency.

5. Apparatus for recovering, at a destination node of a packet-based telecommunications network, the timing clock of a service input at a source node of said packet-based telecommunications network, the destination node and the source node having a common network clock, comprising at the source node:

dividing means for dividing the timing clock of the service input by a factor of an integer N to form residual time stamp (RTS) periods;

counting means connected to the network clock for counting network clock cycles modulo 2^P, where 2_P is less than the number of network clock cycles within an RTS period and P is chosen so that the 2_P counts uniquely and unambiguously represent the range of possible network clock cycles within an RTS period; and

transmitting means, responsive to the RTS periods formed by said dividing means and the count of said counting means, for transmitting over the telecommunications network an RTS at the end of each RTS period that is equal to the modulo 2^P count of network clock cycles at that time;

and comprising at the destination node:

receiving means for receiving the RTSs transmitted over the telecommunications network by said transmitting means;

converting means responsive to the received RTSs and the network clock for converting the received RTSs into a pulse signal in which the periods between pulses are determined from the numbers of network clock cycles associated with the counts of network clock cycles within said RTS periods; and

means for multiplying the frequency of the pulse signal generated by said converting means by the same factor of an integer N used in said dividing means for recovering the timing clock of the service input.

6. Apparatus in accordance with claim 5 wherein the network clock frequency is less than or equal to twice the service clock frequency.

7. Apparatus in accordance with claim 5 wherein said converting means comprises:

means for sequentially storing the received RTSs;

means for counting network clock cycles modulo 2_P;

comparing means for comparing the modulo 2_P count of network clock cycles with a stored RTS and for generating a pulse each time the count of network clock cycles matches the RTS; and gating means for gating to said multiplying means, for each sequentially received and stored RTS, the pulse produced by said comparing means that occurs after the counting means counts, starting-in-time from the previous gated pulse, a number of network clock cycles that is greater than a predetermined minimum absolute number of network clock cycles that can occur within any RTS period.

8. Apparatus for recovering, at a destination node of a packet-based telecommunications network, the timing clock of a service input at a source node of said packet-based telecommunications network, the destination node and the source node having a common network clock, comprising at the source node:

first dividing means for dividing the timing clock of the service input by a factor of an integer N to form residual time stamp (RTS) periods;

second dividing means for dividing the network clock by a rational factor to form a derived network clock;

counting means connected to the network clock for counting derived network clock cycles modulo 2^P, where 2_P is less than the number of derived network clock cycles within an RTS period and P is chosen so that the 2_P counts uniquely and unambiguously represent the range of possible derived network clock cycles within an RTS period; and

transmitting means, responsive to the RTS periods formed by said first dividing means and the count of said counting means, for transmitting over the telecommu-

nications network an RTS at the end of each RTS period that is equal to the modulo 2^P count of derived network clock cycles at that time;

and comprising at the destination node:

receiving means for receiving the RTSs transmitted over the telecommunications network by said transmitting means;

means for dividing the network clock by the same rational factor used at the source node to form a derived network clock;

converting means responsive to the received RTSs and the derived network clock for converting the received RTSs into a pulse signal in which the periods between pulses are determined from the numbers of derived network clock cycles associated with the counts of derived network clock cycles within said RTS periods; and

means for multiplying the frequency of the pulse signal generated by said converting means by the same factor of an integer N used in said first dividing means for recovering the timing clock of the service input.

9. Apparatus in accordance with claim **8** wherein the derived network clock frequency is less than or equal to twice service clock frequency.

10. Apparatus in accordance with claim **8** wherein said converting means comprises:

means for sequentially storing the received RTSs;

means for counting derived network clock cycles modulo 2_P;

comparing means for comparing the modulo 2_P count of derived network clock cycles with a stored RTS and for generating a pulse each time the count of derived network clock cycles matches the RTS; and

gating means for gating to said multiplying means, for each sequentially received and stored RTS, the pulse produced by said comparing means that occurs after the counting means counts, starting-in-time from the previous gated pulse, a number of derived network clock cycles that is greater than a predetermined minimum absolute number of derived network clock cycles that can occur within any RTS period.

11. Apparatus for generating a representation of the relationship between the timing clock of a service input, at a source node of a packet-based telecommunications network, and a network clock, the apparatus comprising:

(a) means, at the source node, for defining a residual time stamp (RTS) period as an integral number N of source-node service clock cycles;

(b) means, at the source node, for defining a derived network clock frequency f_{nx} from a network frequency f_n where $f_{nx}=f_n/x$, x is a rational number, and f_{nx} is less than or equal to twice the service clock frequency;

(c) means, at the source node, for counting the derived network clock cycles modulo 16 in an RTS period and;

(d) means for transmitting from the source node an RTS that is equal to the modulo 16 count of derived network clock cycles in the RTS period.

12. Apparatus for recovering, at a destination node of a packet-based telecommunications network, the timing clock of a service input at a source node of the packet-based telecommunications network, wherein the destination and source nodes have a common network clock divided network clock and wherein the service node generates a residual time stamp (RTS) signal equal to a modulo 16 count of cycles based on the network clock; the apparatus comprising:

means for receiving the RTS signal;

means for determining the number of network cycles in an RTS period from the RTS signal; and

means responsive to the determining means for generating a clock signal which represents a recovery of the timing clock of the service input.

13. Apparatus for generating a representation of a timing clock of a service input at a source node of a packet-based telecommunications network, wherein a common network clock or divided network clock is provided for the source node and a destination node; the apparatus comprising:

(a) means for defining a time interval by a fixed number of service clock cycles; and

(b) means for generating a digital representation of a quantized difference between an actual number of network clock cycles within the time interval and an expected number of network clock cycles within the time interval, the difference being within a defined time window corresponding to a frequency variation of the source-node service clock.

14. The apparatus of claim 13, wherein the digital representation represents a chosen number of the least significant bits of the quantized actual number, the chosen number being sufficient to represent a range of frequency deviations of the source-node service clock variation.

15. The apparatus of claim 14 wherein the chosen number is 4.

16. Apparatus for recovering, at a destination node of a packet-based telecommunications network, the timing clock of a service input at a source node of said network, wherein a common network clock or divided network clock is provided for the destination node and the source node and a time interval is defined by a fixed rational number of source-node service clock cycles; the apparatus comprising:

means for receiving generating a digital representation of a quantized difference between an actual number of network clock cycles within the time interval and an expected number of network clock cycles within the time interval, the difference being within a defined time window corresponding to a frequency variation of the source-node service clock; and

means for recovering the source-node service clock at the destination node by constructing a timing signal at the destination node based on a received representation of the network cycle difference.

17. Apparatus for reconstructing, at a destination node of a packet-based telecommunications network, a timing clock of a service input at a source node of the network, wherein a common network clock or divided network clock is provided for the destination node and the source node and wherein the reconstruction is based on successive modulo 2^P numerical representations of the number of network clock cycles within corresponding successive predetermined time periods, each of the numerical representations being received from the source node and being less than the actual number of network clock cycles within its corresponding time period; the apparatus comprising:

means for receiving the numerical representations in succession at the destination node;

means for converting the received numerical representations into successive fixed time intervals, wherein each successive interval corresponds to the number of network clock cycles in a corresponding one of the predetermined time periods; and

means for recovering the source-node service clock from the fixed time intervals.

18. The apparatus of claim 17, wherein the converting means further comprises:

means for sequentially storing the successive modulo 2^P numerical representations;

means for comparing the successive numerical representations with a modulo 2^P count of the network clock cycles at the destination node to generate a comparison signal for each match between the numerical representation and the modulo 2^P count at the destination node; and

means for successively selecting a proper comparison signal by waiting until a minimum number of network clock cycles has occurred.

19. A method for generating a signal at a source node for use in recovering a source-node service clock at a destination node in a packet-based telecommunications network, wherein a common network clock or divided network clock is provided for the source and destination nodes; the steps of the method comprising:

defining a time interval by a fixed number of cycles of the source-node service clock;

determining an actual number of cycles of the network clock within the time interval;

determining a numerical deviation of the number of actual network clock cycles from another number of network clock cycles that would occur if the source-node service clock frequency were nominal; and

generating a digital signal representing the numerical deviation for transmission through the network to the destination node.

20. A method for recovering a source-node service clock at a destination node in a packet-based telecommunications network, wherein a common network clock or divided network clock is provided for the source and destination nodes, wherein an actual time interval is defined by a fixed number of cycles of the source-node service clock, and wherein a number of actual cycles of the network clock within the actual time interval and a numerical deviation of the number of actual network clock cycles from another number of network clock cycles known nominally to be within the time interval are determined; the steps of the method comprising:

receiving a digital signal representing the numerical deviation transmitted through the network from the source node; and

generating a timing signal corresponding to the source-node service clock on the basis of the digital signal representing the numerical deviation.

21. A method for recovering, at a destination node of a packet-based telecommunications network, a timing clock of a service input at a source node of the packet-based telecommunications network, wherein a common network clock or divided network clock is provided for the destination node and the source node; the steps of the method comprising:

defining a time interval by a fixed number of cycles of the source-node service clock;

determining an actual number of cycles of the network clock within the time interval;

determining a numerical deviation of the number of actual network clock cycles from another number of network clock cycles that would occur within the time interval if the source-node service clock frequency were nominal;

generating a digital signal representing the numerical deviation;

transmitting the digital signal to the destination node; and

generating a timing signal at the destination node corresponding to the source node service clock on the basis of the digital signal and a signal from the network clock.

22. The method of claim 21 wherein the numerical deviation is determined as a function of the fixed number of source-node service clock cycles, the frequencies of the network clock and the source-node service clock, and a frequency variation of the source-node service clock.

23. The method of claim 21 further including the step of employing a modulo 2^P counter to generate a representation of the numerical deviation.

24. Apparatus for generating a signal at a source node for use in recovering a source-node service clock at a destination node in a packet-based telecommunications network, wherein a common network clock or divided network clock is provided for the source and destination nodes; the apparatus comprising:

means for defining a time interval by a fixed number of cycles of the source-node service clock;

means for determining a number of actual cycles of the network clock within the time interval;

means for determining a numerical deviation of the number of actual network clock cycles from another number of network clock cycles that would occur within the time interval if the source-node clock frequency were nominal; and

means for generating a digital signal representing the numerical deviation for transmission through the network to the destination node.

25. The apparatus of claim 24 wherein the numerical deviation is determined as a function of the fixed number of source-node service clock cycles, and frequencies of the network clock and the source-node service clock, and a nominal frequency of the source-node service clock.

26. The apparatus of claim 24 wherein the numerical deviation determining means includes a modulo 2^P counter which generates the numerical deviation.

27. The apparatus of claim 26 wherein a value of 2^P is 16.

28. Apparatus for recovering a source-node clock at a destination node in a packet-based telecommunications network, wherein a common network clock or divided network clock is provided for the source and destination nodes and wherein a time interval is defined by a fixed number of cycles of the source-node service clock, and wherein a number of actual cycles of the network clock within the time interval and a numerical deviation of the number of actual network clock cycles from another number of network clock cycles that would occur within the time if the source-node service clock frequency were nominal;

means for receiving a digital signal representing the numerical deviation transmitted through the network from the source node; and

means for generating a timing signal corresponding to the source-node service clock on the basis of the digital signal representing the numerical deviation.

29. Apparatus for recovering, at a destination node of a packet-based telecommunications network, a timing clock of a service input at a source node of the packet-based telecommunications network, wherein a common network clock or divided network clock is provided for the destination node and the source node; the apparatus comprising:

means for defining a time interval by a fixed number of cycles of the source-node service clock;

means for determining a number of actual cycles of the network-clock within the time interval;

means for determining a numerical deviation of the number of actual network clock cycles from another number of network clock cycles that would occur within the time interval if the source-node service clock frequency were nominal;

means for generating a digital signal representing the numerical deviation;

means for transmitting the digital signal to the destination node; and

means for generating a timing signal at the destination node corresponding to the source-node service clock on the basis of the digital signal and a signal from the network clock.

30. The apparatus of claim 29 wherein the numerical deviation is determined as a function of the fixed number of source-node service clock cycles, frequencies of the network clock and the source-node service clock, and a nominal frequency of the source-node service clock.

31. The apparatus of claim 29 wherein the numerical deviation determining means includes a modulo 2^P counter which generates the numerical deviation.

32. The apparatus of claim 29 wherein means are provided for carrying any fractional network cycle in any time interval for network cycle counting by the modulo 2^P counter for counting the next time interval.

33. A method for generating a representation of the relationship between the timing clock of a service input, at a source node of a packet-based telecommunications network, and a network clock, the method comprising the steps of:

(a) defining, at the source node, a residual time stamp (RTS) period as an integral number N of source-node service clock cycles;

(b) defining, at the source node, a derived network clock frequency f_{nx} from a network frequency f_n where $f_{nx}=f_n/x$, x is a rational number, and f_{nx} is less than or equal to twice the service clock frequency;

(c) counting, at the source node, the derived network clock cycles modulo 16 in an RTS period; and

(d) transmitting from the source node an RTS that is equal to the modulo 16 count of derived network clock cycles in the RTS period.

* * * * *

UNITED STATES PATENT AND TRADEMARK OFFICE

CERTIFICATE OF CORRECTION

PATENT NO. : RE 36,633
DATED : March 28, 2000
INVENTOR(S) : Paul E. Fleischer et al.

It is certified that error appears in the above-identified patent and that said Letters Patent is hereby corrected as shown below:

Column 8,
Lines 63 and 65, change "$2p$" to -- 2^P --.

Column 9,
Lines 3, 30, 32 and 37, change "$2p$" to -- 2^P --.

Column 10,
Lines 2, 4, 34, 35, 59 and 61, change "$2p$" to -- 2^P --.

Column 11,
Lines 30 and 31, change "$2p$" to -- 2^P --.

Signed and Sealed this

Second Day of August, 2005



JON W. DUDAS
Director of the United States Patent and Trademark Office

EXHIBIT 18

The American Heritage® Dictionary

of the English Language

FOURTH EDITION

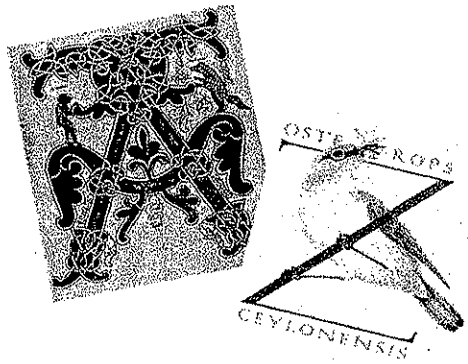

HOUGHTON MIFFLIN COMPANY
Boston New York

Words are included in this Dictionary on the basis of their usage. Words that are known to have current trademark registrations are shown with an initial capital and are also identified as trademarks. No investigation has been made of common-law trademark rights in any word, because such investigation is impracticable. The inclusion of any word in this Dictionary is not, however, an expression of the Publisher's opinion as to whether or not it is subject to proprietary rights. Indeed, no definition in this Dictionary is to be regarded as affecting the validity of any trademark.

American Heritage® and the eagle logo are registered trademarks of Forbes Inc. Their use is pursuant to a license agreement with Forbes Inc.

Copyright © 2000 Houghton Mifflin Company. All rights reserved.

No part of this work may be reproduced or transmitted in any form or by any means, electronic or mechanical, including photocopying and recording, or by any information storage or retrieval system without the prior written permission of Houghton Mifflin Company unless such copying is expressly permitted by federal copyright law. Address inquiries to Reference Permissions, Houghton Mifflin Company, 222 Berkeley Street, Boston, MA 02116.

Visit our Web site: www.hmco.com/trade.

Library of Congress Cataloging-in-Publication Data

The American Heritage dictionary of the English language.–4th ed.
p. cm.
ISBN 0-395-82517-2 (hardcover) — ISBN 0-618-08230-1 (hardcover with CD ROM)
1. English language–Dictionaries
PE1628 .A623 2000
423–dc21

00-025369

Manufactured in the United States of America

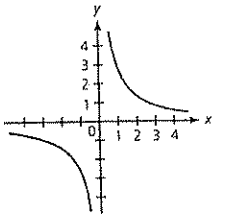

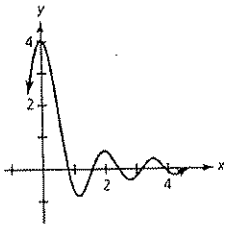

asymptote
top: The x and y axes are asymptotes of the hyperbola $xy = 1$.
bottom: The x axis is the asymptote of the curve $y = \frac{\sin x}{x}$.



Atahualpa
contemporary drawing depicting Atahualpa's arrest by Pizarro



atelier

in the southern part of the country on the Paraguay River. It is Paraguay's chief port and industrial center. Population: 546,637.

a•sun•der (ə-sŭn′dər) *adv.* **1.** Into separate parts or pieces: *broken asunder.* **2.** Apart from each other either in position or in direction: *The curtains had been drawn asunder.* [Middle English, from Old English *on sundran* : *on,* on; see ON + *sundran,* separately (from *sunder,* apart).] —**a•sun′der** *adj.*

ASV *abbr. Bible* American Standard Version

As•wan (ăs′wän′, äs-wän′, äs-) A city of southern Egypt at the First Cataract of the Nile River near the **Aswan High Dam.** Construction of the dam, dedicated in 1971, required the relocation of some 90,000 people and numerous archaeological treasures. The city's population is 220,000.

a•swarm (ə-swôrm′) *adj.* Filled or overrun, as with moving objects or beings; teeming: *The playground was aswarm with children.*

as well as *conj.* And in addition: *courageous as well as strong.* ❖ *prep.* In addition to: *"The rhetoric* [of the Justices], *as well as the reasoning, is appreciated"* (Benno C. Schmidt, Jr.).

a•swirl (ə-swûrl′) *adj.* Moving with a swirling or whirling motion: *couples aswirl on the dance floor.*

a•swoon (ə-swōōn′) *adv. & adj.* In a faint or swoon: *fairly aswoon with delight.* [Middle English *aswowne,* ultimately from Old English *geswōgen,* fainted, past participle of **swōgan,* to lose consciousness.]

a•sy•lum (ə-sī′ləm) *n.* **1.** An institution for the care of people, especially those with physical or mental impairments, who require organized supervision or assistance. **2.** A place offering protection and safety; a shelter. **3.** A place, such as a church, formerly constituting an inviolable refuge for criminals or debtors. **4.** The protection afforded by a sanctuary. See synonyms at **shelter.** **5.** Protection and immunity from extradition granted by a government to a political refugee from another country. [Middle English *asilum,* refuge, from Latin *asȳlum,* from Greek *asūlon,* sanctuary, from neuter of *asūlos,* inviolable : *a-,* without; see A–[1] + *sūlon,* right of seizure.]

a•sym•met•ric (ā′sĭ-mĕt′rĭk) also **a•sym•met•ri•cal** (-rĭ-kəl) *adj.* **1.** Having no balance or symmetry. **2.** *Chemistry* Of or relating to a carbon atom having four different atoms or structural groups attached to it, resulting in an unbalanced spatial arrangement of atoms in a molecule, so that the molecule cannot be superimposed on its mirror image; chiral. —**a′sym•met′ri•cal•ly** *adv.*

a•sym•me•try (ā-sĭm′ĭ-trē) *n.* Lack of balance or symmetry.

a•symp•to•mat•ic (ā′sĭmp-tə-măt′ĭk) *adj.* Neither causing nor exhibiting symptoms of disease. —**a′symp•to•mat′i•cal•ly** *adv.*

as•ymp•tote (ăs′ĭm-tōt′, -ĭmp-) *n.* A line whose distance to a given curve tends to zero. An asymptote may or may not intersect its associated curve. [Ultimately from Greek *asumptōtos,* not intersecting : *a-,* not; see A–[1] + *sumptōtos,* intersecting (from *sumpiptein, sumptō-,* to converge : *sun-,* syn- + *piptein,* to fall; see **pet-** in Appendix I).] —**as′ymp•tot′ic** (-tŏt′ĭk), **as′ymp•tot′i•cal** *adj.* —**as′ymp•tot′i•cal•ly** *adv.*

a•syn•ap•sis (ā′sĭ-năp′sĭs) *n., pl.* **-ses** (-sēz) The failure of homologous chromosomes to pair during meiosis.

a•syn•chro•nism (ā-sĭng′krə-nĭz′əm) or **a•syn•chron•y** (-krə-nē) *n.* Lack of temporal concurrence; absence of synchronism. —**a•syn′chro•nous** (-nəs) *adj.* —**a•syn′chro•nous•ly** *adv.*

a•syn•de•ton (ə-sĭn′dĭ-tŏn′) *n.* The omission of conjunctions from constructions in which they would normally be used, as in *"Are all thy conquests, glories, triumphs, spoils,/Shrunk to this little measure?"* (Shakespeare). [Late Latin, from Greek *asundeton,* from neuter of *asundetos,* without conjunctions : *a-,* not; see A–[1] + *sundetos,* bound together (from *sundein,* to bind together : *sun-,* syn- + *dein,* to bind).] —**as′yn•det′ic** (ăs′ĭn-dĕt′ĭk) *adj.* —**as′yn•det′i•cal•ly** *adv.*

a•syn•tac•tic (ā′sĭn-tăk′tĭk) *adj.* Not conforming to accepted patterns of syntax.

As•yut (ä-syōōt′) A city of east-central Egypt on the Nile River. It is an industrial and trade center. Population: 321,000.

at[1] (ăt; at *when unstressed*) *prep.* **1a.** In or near the area occupied by; in or near the location of: *at the market; at our destination.* **b.** In or near the position of: *always at my side; at the center of the page.* **2.** To or toward the direction or location of, especially for a specific purpose: *Questions came at us from all sides.* **3.** Present during; attending: *at the dance.* **4.** Within the interval or span of: *at the dinner hour; at a glance.* **5.** In the state or condition of: *at peace with one's conscience.* **6.** In the activity or field of: *skilled at playing chess; good at math.* **7.** To or using the rate, extent, or amount of; to the point of: *at 30 cents a pound; at high speed; at 20 paces; at 350°F.* **8.** On, near, or by the time or age of: *at three o'clock; at 72 years of age.* **9.** On account of; because of: *rejoice at a victory.* **10.** By way of; through: *exited at the rear gate.* **11.** In accord with; following: *at my request.* **12.** Dependent upon: *at the mercy of the court.* **13.** Occupied with: *at work.* —***idiom:*** **at it** *Informal* Engaged in verbal or physical conflict; arguing or fighting: *The neighbors are at it again.* [Middle English, from Old English *æt.* See **ad-** in Appendix I.]

at[2] (ăt) *n., pl.* **at** See table at **currency.** [Lao *àt,* perhaps from Thai *ʔàt,* former coin worth one-eighth of a fūang (a former unit of currency), ultimately from Pali *aṭṭha,* eight, from Sanskrit *aṣṭâ.* See **oktō(u)-** in Appendix I.]

aT *abbr.* attotesla

At[1] The symbol for the element **astatine.**

At[2] *abbr.* ampere-turn

AT *abbr.* **1.** air temperature **2.** also **a/t** antitank **3.** automatic transmission

at- *pref.* Variant of **ad-** (sense 1).

.at *abbr.* Austria (in Internet addresses)

A•ta•ba•li•pa (ä′tə-bä′lē-pä′) See **Atahualpa.**

At•a•brine (ăt′ə-brēn′, -brĭn′) A trademark used for a preparation of quinacrine hydrochloride.

At•a•ca•ma Desert (ăt′ə-kăm′ə, ä′tä-kä′mä) An arid region of northwest Chile. One of the driest areas in the world, it has yielded great nitrate and copper wealth.

at•a•ghan (ăt′ə-găn′, -gən) *n.* Variant of **yataghan.**

A•ta•hual•pa (ä′tə-wäl′pə) also **A•ta•ba•li•pa** (-bä′lē-pä′) 1502?–1533. Last independent Incan emperor (1532–1533), who defeated his half-brother Huáscar (1532) and briefly reunited the empire after years of civil war. He was captured by the Spaniards, convicted of plotting against Pizarro, and executed by garrote despite his agreement to a vast ransom.

At•a•lan•ta (ăt′ə-lăn′tə) *n. Greek Mythology* A hunter who agreed to marry any man who could defeat her in a footrace. She was outrun by Hippomenes, who won by dropping along the course three golden apples, which she paused to pick up.

at•a•man (ăt′ə-măn′) *n., pl.* **-mans** A Cossack chief. Also called *hetman.* [Russian, from South Turkic, leader of an armed band : *ata,* father + *-man,* augmentative suff.]

at•a•mas•co lily (ăt′ə-măs′kō) *n.* A bulbous plant *(Zephyranthes atamasco)* of the southeast United States, having a showy, solitary, white to pinkish flower on a long stalk. [Virginia Algonquian *attamusco.*]

at•a•rac•tic (ăt′ə-răk′tĭk) also **at•a•rax•ic** (-răk′sĭk) *adj.* Of or relating to a drug or other agent that has a tranquilizing effect. [From Greek *ataraktos,* undisturbed : *a-,* not; see A–[1] + *taraktos,* disturbed (from *tarassein, tarak-,* to disturb).]

At•a•türk (ăt′ə-tûrk′, ä-tä-türk′), **Kemal** See **Kemal Atatürk.**

at•a•vism (ăt′ə-vĭz′əm) *n.* **1.** The reappearance of a characteristic in an organism after several generations of absence, usually caused by the chance recombination of genes. **2.** An individual or a part that exhibits atavism. Also called *throwback.* **3.** The return of a trait or recurrence of previous behavior after a period of absence. [French *atavisme,* from Latin *atavus,* ancestor : *atta,* father + *avus,* grandfather; see **awo-** in Appendix I.] —**at′a•vist** *n.* —**at′a•vis′tic** *adj.* —**at′a•vis′ti•cal•ly** *adv.*

a•tax•i•a (ə-tăk′sē-ə) also **a•tax•y** (ə-tăk′sē) *n.* Loss of the ability to coordinate muscular movement. [Greek *ataxiā,* disorder : *a-,* not; see A–[1] + *taxis,* order.] —**a•tax′ic** *adj. & n.*

At•ba•ra (ăt′bər-ə, ät′-) A river of northeast Africa rising in northwest Ethiopia and flowing about 805 km (500 mi) to the Nile River in eastern Sudan.

at bat or **at-bat** (ăt-băt′) *n.. Baseball* A player's official turn to bat, counted in figuring a batting average unless the catcher interferes or unless the player is hit by the ball, makes a sacrifice hit, or is walked.

A•tchaf•a•lay•a (ə-chăf′ə-lī′ə) A river of south-central Louisiana flowing about 362 km (225 mi) into **Atchafalaya Bay,** an inlet of the Gulf of Mexico.

At•chi•son (ăch′ĭ-sən) A city of northeast Kansas northwest of Kansas City. The city was an important outfitting point for westward travelers, especially after the foundation of the Atchison, Topeka, and Santa Fe Railroad in 1859. Population: 10,656.

ate (āt) *v.* Past tense of **eat.**

A•te (ā′tē, ä′tē, ä′tā) *n. Greek Mythology* The goddess of criminal rashness and consequent punishment.

-ate[1] *suff.* **1a.** Having: *nervate.* **b.** Characterized by: *Latinate.* **c.** Resembling: *lyrate.* **2a.** One that is characterized by: *laminate.* **b.** Rank; office: *rabbinate.* **3.** To act upon in a specified manner: *acidulate.* [Ultimately from Latin *-ātus,* past participle suff. of verbs in *-āre.*]

-ate[2] *suff.* **1.** A derivative of a specified chemical compound or element: *aluminate.* **2.** A salt or ester of a specified acid whose name ends in *-ic: acetate.* [New Latin *-ātum,* from Latin, neuter of *-ātus,* past participle suff. of verbs in *-āre.*]

A-team (ā′tēm′) *n.* **1.** A subunit of the Special Forces, usually consisting of 12 soldiers. **2.** *Informal* A group having a special mission, especially in a leadership role: *"America is the A-team among nations, bursting with energy, courage and determination"* (Ronald Reagan). [Informal name for *A-detachment* : A[1], first in a series + DETACHMENT.]

at•e•lec•ta•sis (ăt′l-ĕk′tə-sĭs) *n., pl.* **-ses** (-sēz′) **1.** Total or partial collapse of the lung. **2.** A congenital condition characterized by the incomplete expansion of the lungs at birth. [New Latin : Greek *atelēs,* incomplete (*a-,* not; see A–[1] + *telos,* end; see TELO–) + Greek *ektasis,* stretching out (from *ekteinein,* to stretch out : *ek-,* out; see ECTO– + *teinein,* to stretch; see EPITASIS).]

at•el•ier (ăt′l-yā′) *n.* A workshop or studio, especially for an artist or designer. [French, from Old French *astelier,* carpenter's shop, from *astele,* splinter, from Late Latin *astella,* alteration of Latin *astula,* diminutive of *assis,* board.]

a•te•moy•a (ä′tə-moi′ə, ăt′ə-) *n.* **1.** A conical or heart-shaped green fruit with edible sweet white flesh. **2.** The tree producing this fruit, a hybrid between the cherimoya and the sweetsop. [Philippine English *ates,* sweetsop (from Tagalog *atis*) + (CHERI)MOYA.]

a tem•po (ä tĕm′pō) *adv. & adj. Music* In the tempo originally designated; resuming the initial tempo of a section or movement after a specified deviation from it. Used chiefly as a direction. [Italian : *a,* in + *tempo,* time.]

a•tem•po•ral (ā-tĕm′pər-əl) *adj.* Independent of time; timeless.

A•ten (ät′n) *n.* Variant of **Aton.**

At•get (ät-zhā′), **Jean Eugène** 1856–1927. French photographer noted for his documentary photographs of Paris and its inhabitants.

Ath•a•bas•ca or **Ath•a•bas•ka** (ăth′ə-băs′kə) A river rising in

EXHIBIT 19

The American Heritage® Dictionary

of the English Language

FOURTH EDITION

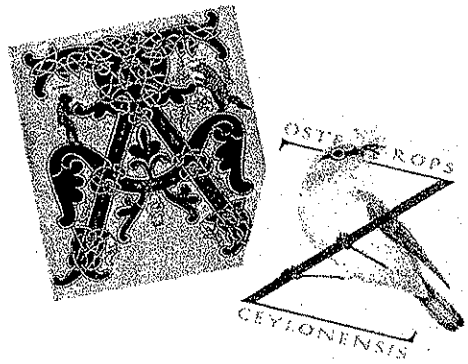

HOUGHTON MIFFLIN COMPANY
Boston New York

Words are included in this Dictionary on the basis of their usage. Words that are known to have current trademark registrations are shown with an initial capital and are also identified as trademarks. No investigation has been made of common-law trademark rights in any word, because such investigation is impracticable. The inclusion of any word in this Dictionary is not, however, an expression of the Publisher's opinion as to whether or not it is subject to proprietary rights. Indeed, no definition in this Dictionary is to be regarded as affecting the validity of any trademark.

American Heritage® and the eagle logo are registered trademarks of Forbes Inc. Their use is pursuant to a license agreement with Forbes Inc.

Copyright © 2000 Houghton Mifflin Company. All rights reserved.

No part of this work may be reproduced or transmitted in any form or by any means, electronic or mechanical, including photocopying and recording, or by any information storage or retrieval system without the prior written permission of Houghton Mifflin Company unless such copying is expressly permitted by federal copyright law. Address inquiries to Reference Permissions, Houghton Mifflin Company, 222 Berkeley Street, Boston, MA 02116.

Visit our Web site: www.hmco.com/trade.

Library of Congress Cataloging-in-Publication Data

The American Heritage dictionary of the English language.–4th ed.
p. cm.
ISBN 0-395-82517-2 (hardcover) — ISBN 0-618-08230-1 (hardcover with CD ROM)
1. English language–Dictionaries
PE1628 .A623 2000
423–dc21

00-025369

Manufactured in the United States of America

-cor•ing, -cores To demand an encore of. ❖ *interj.* Used to demand an additional performance. [French, still, yet, again, probably from Vulgar Latin *'hinc ad hōram,* from that to this hour : Latin *hinc,* from here (from *hic,* this) + Latin *ad,* to; see AD- + Latin *hōram,* accusative of *hōra,* hour; see HOUR.]

en•coun•ter (ĕn-koun′tər) *n.* **1.** A meeting, especially one that is unplanned, unexpected, or brief: *a chance encounter in the park.* **2a.** A hostile or adversarial confrontation; a contest: *a tense naval encounter.* **b.** An often violent meeting; a clash. ❖ *v.* **-tered, -ter•ing, -ters** *—tr.* **1.** To meet, especially unexpectedly; come upon: *encountered an old friend on the street.* **2.** To confront in battle or contention. **3.** To come up against: *encounter numerous obstacles. —intr.* To meet, especially unexpectedly. [Middle English *encountre,* from Old French, from *encontrer,* to meet, from Late Latin *incontrāre* : Latin *in-,* in; see EN-[1] + Latin *contrā,* against; see **kom** in Appendix I.]

encounter group *n.* A typically unstructured psychotherapy group in which the participants seek to increase their sensitivity, responsiveness, and emotional expressiveness, as by freely verbalizing and responding to emotions.

en•cour•age (ĕn-kûr′ĭj, -kŭr′-) *tr.v.* **-aged, -ag•ing, -ag•es 1.** To inspire with hope, courage, or confidence; hearten. **2.** To give support to; foster: *policies designed to encourage private investment.* **3.** To stimulate; spur: *burning the field to encourage new plant growth.* [Middle English *encouragen,* from Old French *encoragier* : *en-,* causative pref.; see EN-[1] + *corage,* courage; see COURAGE.] **—en•cour′ag•er** *n.*

Synonyms *encourage, animate, cheer, embolden, hearten, inspirit* These verbs mean to impart courage, inspiration, and resolution to: *encouraged the athlete to compete; played music to animate the crowd; a visitor cheering the patient; was emboldened to sing for the guests; praise that heartened us; a pep talk that inspirited the weary team.*
Antonym *discourage*

en•cour•age•ment (ĕn-kûr′ĭj-mənt, -kŭr′-) *n.* **1.** The act of encouraging. **2.** The state of being encouraged. **3.** One that encourages.

en•cour•ag•ing (ĕn-kûr′ə-jĭng, -kŭr′-) *adj.* Giving courage, confidence, or hope: *an encouraging advance in medical research.* **—en•cour′ag•ing•ly** *adv.*

en•croach (ĕn-krōch′) *intr.v.* **-croached, -croach•ing, -croach•es 1.** To take another's possessions or rights gradually or stealthily: *encroach on a neighbor's land.* **2.** To advance beyond proper or former limits: *desert encroaching upon grassland.* **3.** *Football* To commit encroachment. [Middle English *encrochen,* to seize illegally, from Old French *encrochier,* to seize : *en-,* in; see EN-[1] + *croc,* hook (of Germanic origin).] **—en•croach′er** *n.*

en•croach•ment (ĕn-krōch′mənt) *n.* **1.** The act or an instance of encroaching. **2.** *Football* A violation of the rules in which a player enters the neutral zone and makes contact with an opponent prior to the snap of the ball.

en•crust (ĕn-krŭst′) also **in•crust** (ĭn-) *tr.v.* **-crust•ed, -crust•ing, -crusts 1.** To cover or coat with or as if with a crust: *tires encrusted with dried mud; legalities that were encrusted with tradition.* **2.** To decorate by inlaying or overlaying with a contrasting material: *encrust wood paneling with ivory.* [Possibly from French *incruster,* from Latin *incrustāre* : *in-,* on; see EN-[1] + *crusta,* crust; see **kreus-** in Appendix I.]

en•crust•a•tion (ĕn′krŭs-tā′shən) *n.* Variant of **incrustation.**

en•crypt (ĕn-krĭpt′) *tr.v.* **-crypt•ed, -crypt•ing, -crypts 1.** To put into code or cipher. **2.** *Computer Science* To alter (a file, for example) using a secret code so as to be unintelligible to unauthorized parties. [EN-[1] + (DE)CRYPT.] **—en•cryp′tion** *n.*

en•cum•ber (ĕn-kŭm′bər) *tr.v.* **-bered, -ber•ing, -bers 1.** To put a heavy load on; burden: *a hiker who was encumbered with a heavy pack; a life that has always been encumbered with responsibilities.* **2.** To hinder or impede the action or performance of: *restrictions that encumber police work.* **3.** To burden with legal or financial obligations: *an estate that is encumbered with debts.* [Middle English *encombren,* from Old French *encombrer,* to block up : *en-,* in; see EN-[1] + *combre,* hindrance (from Gaulish **comboros*).]

en•cum•brance (ĕn-kŭm′brəns) *n.* **1.** One that encumbers; a burden or impediment. **2.** *Law* A lien or claim on property.

en•cum•branc•er (ĕn-kŭm′brən-sər) *n. Law* One that holds an encumbrance.

–ency *suff.* Condition or quality: *complacency.* [Middle English, variant of *-ence,* -ence.]

en•cyc•li•cal (ĕn-sĭk′lĭ-kəl) *adj.* Intended for general or wide circulation. ❖ *n. Roman Catholic Church* A papal letter addressed to the bishops of the Church or to the hierarchy of a particular country. [From Medieval Latin *encyclicus,* circular, from Greek *enkuklios* : *en-,* in; see EN-[2] + *kuklos,* circle; see **k^{w}el-**[1] in Appendix I.]

en•cy•clo•pe•di•a (ĕn-sī′klə-pē′dē-ə) *n.* A comprehensive reference work containing articles on a wide range of subjects or on numerous aspects of a particular field, usually arranged alphabetically. [Medieval Latin *encyclopaedia,* general education course, from alteration of Greek *enkuklios paideia,* general education : *enkuklios,* circular, general; see EN-CYCLICAL + *paideia,* education (from *pais, paid-,* child; see **pau-** in Appendix I).]

Word History *The word encyclopedia, which to us usually means a large set of books, descends from a phrase that involved coming to grips with the contents of such books. The Greek phrase is enkuklios paideia, made up of enkuklios, "cyclical, periodic, ordinary," and paideia, "education," and meaning "general education." Copyists of Latin manuscripts took this phrase to be a single Greek word, enkuklopaedia, with the same meaning, and this spurious Greek word became the New Latin word encyclopaedia, coming into English with the sense "general course of instruction," first recorded in 1531. In New Latin the word was chosen as the title of a reference work covering all knowledge. The first such use in English is recorded in 1644.*

en•cy•clo•pe•dic (ĕn-sī′klə-pē′dĭk) *adj.* **1.** Of, relating to, or characteristic of an encyclopedia. **2.** Embracing many subjects; comprehensive: *"an ignorance almost as encyclopedic as his erudition"* (William James). **—en•cy′clo•pe′di•cal•ly** *adv.*

en•cy•clo•pe•dism (ĕn-sī′klə-pē′dĭz′əm) *n.* Encyclopedic learning.

en•cy•clo•pe•dist (ĕn-sī′klə-pē′dĭst) *n.* **1.** A person who writes for or compiles an encyclopedia. **2. Encyclopedist** One of the writers of the French *Encyclopédie* (1751–1772), including its editors, Diderot and d'Alembert.

en•cyst (ĕn-sĭst′) *v.* **-cyst•ed, -cyst•ing, -cysts** *—tr.* To enclose in or as if in a cyst. *—intr.* To take the form of or become enclosed in a cyst. **—en•cyst′ment, en′cys•ta′tion** *n.*

end (ĕnd) *n.* **1.** Either extremity of something that has length: *the end of the pier.* **2.** The outside or extreme edge or physical limit; a boundary: *the end of town.* **3.** The point in time when an action, an event, or a phenomenon ceases or is completed; the conclusion: *the end of the day.* **4.** A result; an outcome. **5.** Something toward which one strives; a goal. See synonyms at **intention. 6.** The termination of life or existence; death: *"A man awaits his end/Dreading and hoping all"* (William Butler Yeats). **7.** The ultimate extent; the very limit: *the end of one's patience.* **8.** *Slang* The very best; the ultimate: *This pizza's the end.* **9.** A remainder; a remnant. **10a.** A share of a responsibility or obligation: *your end of the bargain.* **b.** A particular area of responsibility: *in charge of the business end of the campaign.* **11.** *Football* **a.** Either of the players in the outermost position on the line of scrimmage. **b.** The position played by such a player. ❖ *v.* **end•ed, end•ing, ends** *—tr.* **1.** To bring to a conclusion. **2.** To form the last or concluding part of: *the song that ended the performance.* **3.** To destroy: *ended our hopes. —intr.* **1.** To come to a finish; cease. See synonyms at **complete. 2.** To arrive at a place, situation, or condition as a result of a course of action. Often used with *up: He ended up as an advisor to the president. The painting ended up being sold for a million dollars.* **3.** To die. ***—idioms:* in the end** Eventually; ultimately: *All will turn out well in the end.* **no end** A great deal: *She had no end of stories to tell.* **on end 1.** Having one end down; upright: *books placed on end on the shelf.* **2.** Without stopping: *drove for hours on end.* [Middle English *ende,* from Old English. See **ant-** in Appendix I.]

end– *pref.* Variant of **endo–.**

en•da•moe•ba (ĕn′də-mē′bə) *n.* Variant of **entamoeba.**

en•dan•ger (ĕn-dān′jər) *tr.v.* **-gered, -ger•ing, -gers 1.** To expose to harm or danger; imperil. **2.** To threaten with extinction. **—en•dan′ger•ment** *n.*

Synonyms *endanger, hazard, imperil, jeopardize, risk* These verbs mean to subject to danger, loss, or destruction: *driving that endangers lives; hazarded his health by smoking; a forest imperiled by acid rain; strikes that jeopardized company profits; wouldn't risk her financial security.*

en•dan•gered species (ĕn-dān′jərd) *n.* A species present in such small numbers that it is at risk of extinction.

end•arch (ĕn′därk′) *adj.* Of or relating to a xylem whose early development is toward the center. [END(O)– + Greek *arkhē,* beginning (from *arkhein,* to begin, rule).]

end•ar•te•rec•to•my (ĕn′där-tə-rĕk′tə-mē) *n., pl.* **-mies** Surgical excision of the inner lining of an artery that is clogged with atherosclerotic buildup. [New Latin *endartērium,* inner lining of an artery (ENDO– + Latin *artēria,* artery; see ARTERY) + –ECTOMY.]

end•ar•te•ri•tis (ĕn′där-tə-rī′tĭs) *n.* Inflammation of the inner lining of an artery. [New Latin *endartēritum,* inner lining of an artery; see ENDARTERECTOMY + –ITIS.]

en•dash or **en dash** (ĕn′dăsh′) *n.* A symbol (–) used in writing or printing to connect continuing or inclusive numbers or to connect elements of a compound adjective when either of the elements is an open compound, as *1880–1945* or *Princeton–New York trains.* [From its being the width of an *n* in printing.]

end•brain (ĕnd′brān′) *n.* See **telencephalon.**

en•dear (ĕn-dîr′) *tr.v.* **-deared, -dear•ing, -dears** To make beloved or very sympathetic: *a couple whose kindness endeared them to friends.*

en•dear•ing (ĕn-dîr′ĭng) *adj.* Inspiring affection or warm sympathy: *the endearing charm of a little child.* **—en•dear′ing•ly** *adv.*

en•dear•ment (ĕn-dîr′mənt) *n.* **1.** The act of endearing. **2.** An expression of affection, such as a caress.

en•deav•or (ĕn-dĕv′ər) *n.* **1.** A conscientious or concerted effort toward an end; an earnest attempt. **2.** Purposeful or industrious activity; enterprise. ❖ *v.* **-ored, -or•ing, -ors** *—tr.* To attempt (fulfillment of a responsibility or an obligation, for example) by employment or expenditure of effort: *endeavored to improve the quality of life in the inner city. —intr.* To work with a set or specified goal or purpose. [Middle English *endevour,* from *endeveren,* to make an effort, from *(putten) in dever,* (to put oneself) in duty, make it one's duty : *in,* in; see IN-[1] + *dever,* duty (from Old French *deveir, devoir,* duty; see DEVOIR).] **—en•deav′or•er** *n.*

en•deav•our (ĕn-dĕv′ər) *n.* & *v. Chiefly British* Variant of **endeavor.**

En•de•cott also **En•di•cott** (ĕn′dĭ-kət, -kŏt′), **John** 1588?–1665. English-born American colonial administrator who was a founder of the

ă pat	oi boy
ā pay	ou out
âr care	o͝o took
ä father	o͞o boot
ĕ pet	ŭ cut
ē be	û̆r urge
ĭ pit	th thin
ī pie	*th* this
îr pier	hw which
ŏ pot	zh vision
ō toe	ə about, item
ô paw	♦ regionalism

Stress marks: ′ (primary); ″ (secondary), as in dictionary (dĭk′shə-nĕr′ē)

EXHIBIT 20

THE AMERICAN HERITAGE® DICTIONARY OF THE ENGLISH LANGUAGE

THIRD EDITION



HOUGHTON MIFFLIN COMPANY
Boston · New York

Words are included in this Dictionary on the basis of their usage. Words that are known to have current trademark registrations are shown with an initial capital and are also identified as trademarks. No investigation has been made of common-law trademark rights in any word, because such investigation is impracticable. The inclusion of any word in this Dictionary is not, however, an expression of the Publisher's opinion as to whether or not it is subject to proprietary rights. Indeed, no definition in this Dictionary is to be regarded as affecting the validity of any trademark.

American Heritage® and the eagle logo are registered trademarks of Forbes Inc. Their use is pursuant to a license agreement with Forbes Inc.

Houghton Mifflin Company gratefully acknowledges Mead Data Central, Inc., providers of the LEXIS®/NEXIS® services, for its assistance in the preparation of this edition of *The American Heritage® Dictionary*.

Copyright © 1996, 1992 by Houghton Mifflin Company.
All rights reserved.

No part of this work may be reproduced or transmitted in any form or by any means, electronic or mechanical, including photocopying and recording, or by any information storage or retrieval system without the prior written permission of Houghton Mifflin Company unless such copying is expressly permitted by federal copyright law. Address inquiries to Reference Permissions, Houghton Mifflin Company, 222 Berkeley Street, Boston, MA 02116.

Library of Congress Cataloging-in-Publication Data

The American heritage dictionary of the English language.
—3rd ed.
p. cm.
ISBN 0-395-44895-6
1. English language—Dictionaries.
PE1628.A623 1992 92-851
423—dc20 CIP

Manufactured in the United States of America

For information about this and other Houghton Mifflin trade and reference books and multimedia products, visit The Bookstore at Houghton Mifflin on the World Wide Web at http://www.hmco.com/trade/.

pour; see **ghеu-** in Appendix.] —**per·fu′sive** (pər-fyōō′sĭv, -zĭv) *adj.*

per·fu·sion (pər-fyōō′zhən) *n.* **1.** The act of perfusing. **2.** The injection of fluid into a blood vessel in order to reach an organ or tissues, usually to supply nutrients and oxygen.

Per·ga·mum (pûr′gə-məm). An ancient Greek city and kingdom of western Asia Minor in modern-day western Turkey. It passed to Rome in the second century B.C. and was noted for its sculpture and its library, which Mark Antony gave to Cleopatra.

per·go·la (pûr′gə-lə) *n.* An arbor or a passageway of columns supporting a roof of trelliswork on which climbing plants are trained to grow. [Italian, from Latin *pergula.*]

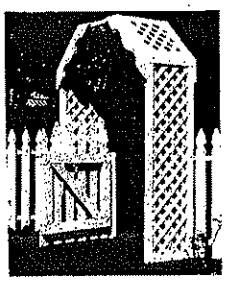

pergola

Per·go·le·si (pĕr′gə-lā′zē, -gō-lē′-), **Giovanni Battista.** 1710–1736. Italian composer who wrote the comic opera *The Maid as Mistress* (1733).

per·haps (pər-hăps′) *adv.* Maybe; possibly. [From Middle English *perhap* : *per,* by (from Latin; see PER) + *hap,* chance; see HAP.]

peri– *pref.* **1.** Around; about; enclosing: *perimysium.* **2.** Near: *perinatal.* [Greek, from *peri.* See **per**[1] in Appendix.]

per·i·anth (pĕr′ē-ănth′) *n.* The outer envelope of a flower, consisting of either the calyx or the corolla, or both. [French *périanthe,* from New Latin *perianthum* : Greek *peri-,* peri- + Greek *anthos,* flower.]

per·i·apt (pĕr′ē-ăpt′) *n.* A charm worn as protection against mischief and disease; an amulet. [French *périapte,* from Greek *periapton,* from *periaptos,* hung around : *peri-,* peri- + *haptos,* fastened (from *haptein,* to fasten).]

per·i·aq·ue·duc·tal (pĕr′ē-ăk′wĭ-dŭk′təl) *adj.* Situated around the aqueduct of the brain: *the periaqueductal gray matter.*

Per·i·bon·ca (pĕr′ə-bŏng′kə). A river, about 451 km (280 mi) long, of central Quebec, Canada, flowing southward through **Peribonca Lake** to Lake St. John.

per·i·car·di·a (pĕr′ĭ-kär′-dē-ə) *n.* Plural of **pericardium.**

per·i·car·di·tis (pĕr′ĭ-kär-dī′tĭs) *n.* Inflammation of the pericardium.

per·i·car·di·um (pĕr′ĭ-kär′dē-əm) *n., pl.* **-di·a** (-dē-ə). The membranous sac filled with serous fluid that encloses the heart and the roots of the aorta and other large blood vessels. [New Latin, from Greek *perikardion,* from *perikardios,* around the heart : *peri-,* peri- + *kardia,* heart; see **kerd-** in Appendix.] —**per′i·car′di·al** (-dē-əl), **per′i·car′di·ac′** (-dē-ăk′) *adj.*

per·i·carp (pĕr′ĭ-kärp′) *n.* **1.** *Botany.* The wall of a ripened ovary; fruit wall. **2.** A membranous structure surrounding the cystocarp of red algae. —**per′i·car′pi·al** *adj.*

per·i·chon·dri·um (pĕr′ĭ-kŏn′drē-əm) *n., pl.* **-dri·a** (-drē-ə). The fibrous membrane of connective tissue covering the surface of cartilage except at the endings of joints. [New Latin : PERI– + Greek *khondrion,* diminutive of *khondros,* cartilage; see CHONDRO–.] —**per′i·chon′dri·al** (-drē-əl) *adj.*

per·i·clase (pĕr′ĭ-klās′, -klāz′) *n.* A mineral form of magnesium oxide, MgO, usually occurring in cubic crystals or grains. [German *Periklas* : Greek *peri-,* intensive pref.; see PERI– + Greek *klasis,* breaking (from its perfect cleavage).]

Per·i·cles (pĕr′ĭ-klēz′). Died 429 B.C. Athenian leader noted for advancing democracy in Athens and for ordering the construction of the Parthenon. —**Per′i·cle′an** (-klē′ən) *adj.*

per·i·cline (pĕr′ĭ-klīn′) *n.* A variety of albite occurring as elongated white crystals. [From Greek *periklinēs,* sloping on all sides : *peri-,* peri- + *klinein,* to slope; see **klei-** in Appendix.]

per·i·cra·ni·um (pĕr′ĭ-krā′nē-əm) *n., pl.* **-ni·a** (-nē-ə). The external periosteum that covers the outer surface of the skull. [New Latin, from Greek *perikranion,* from *perikranios,* around the skull : *peri-,* peri- + *kranion,* cranium; see CRANIUM.] —**per′i·cra′ni·al** *adj.*



Pericles
Copy of a mid fifth-century B.C. herma attributed to Cresilas (fl. 450–430 B.C.)

per·i·cy·cle (pĕr′ĭ-sī′kəl) *n.* A plant tissue characteristic of the roots, located between the endodermis and phloem. [French *péricycle,* from Greek *perikuklos,* spherical : *peri-,* peri- + *kuklos,* circle; see CYCLE.] —**per′i·cy′clic** (-sī′klĭk, -sĭk′lĭk) *adj.*

per·i·derm (pĕr′ĭ-dûrm′) *n.* The outer layers of tissue of woody roots and stems, consisting of the cork cambium and the tissues produced by it, such as cork. —**per′i·der′mal, per′i·der′mic** *adj.*

pe·rid·i·um (pə-rĭd′ē-əm) *n., pl.* **-i·a** (-ē-ə). The covering of the spore-bearing organ in many fungi. [New Latin *pēridium,* from Greek *pēridion,* diminutive of *pēra,* leather pouch.] —**pe·rid′i·al** (-ē-əl) *adj.*

per·i·dot (pĕr′ĭ-dŏt′, -dō′) *n.* A yellowish-green variety of olivine used as a gem. [Middle English, from Old French.] —**per′i·dot′ic** (-dŏt′ĭk, -dō′tĭk) *adj.*

per·i·do·tite (pĕr′ĭ-dō-tīt′, pə-rĭd′ə-) *n.* Any of a group of igneous rocks composed mainly of olivine and various pyroxenes and having a granitelike texture.

per·i·gee (pĕr′ə-jē) *n.* **1.** The point nearest the earth's center in the orbit of the moon or a satellite. **2.** The point in any orbit nearest to the body being orbited. [French *périgée,* from Medieval Latin *perigēum,* from Late Greek *perigeion* : Greek *peri-,* peri- + Greek *gē,* earth.] —**per′i·ge′al** (-jē′əl), **per′i·ge′an** (-jē′ən) *adj.*

pe·rig·y·nous (pə-rĭj′ə-nəs) *adj. Botany.* **1.** Having sepals, petals, and stamens around the edge of a cuplike receptacle containing the ovary, as in flowers of the rose or cherry. **2.** Of or being perigynous flower parts: *perigynous stamens.* —**pe·rig′y·ny** (-ə-nē) *n.*

per·i·he·li·on (pĕr′ə-hē′lē-ən, -hēl′yən) *n., pl.* **-he·li·a** (-hē′lē-ə, -hēl′yə). The point nearest the sun in the orbit of a planet or other celestial body. [Alteration of New Latin *perihelium* : PERI– + Greek *hēlios,* sun; see **sāwel-** in Appendix.] —**per′i·he′li·al** (-hē′lē-əl, -hēl′yəl) *adj.*

per·i·kar·y·on (pĕr′ĭ-kär′ē-ŏn′, -ən) *n., pl.* **-kar·y·a** (-kär′ē-ə). The cell body of a neuron, containing the nucleus and organelles. [PERI– + Greek *karuon,* nut; see KARYO–.] —**per′i·kar′y·al** (-ē-əl) *adj.*

per·il (pĕr′əl) *n.* **1.a.** Imminent danger. **b.** Exposure to the risk of harm or loss. **2.** Something that endangers or involves risk. —**peril** *tr.v.* **-iled, -il·ing, -ils** also **-illed, -il·ling, -ils.** To expose to danger or the chance of injury; imperil. [Middle English, from Old French, from Latin *periculum.* See **per-**[3] in Appendix.]

pe·ril·la (pə-rĭl′ə) *n.* **1.** An annual Asian plant *(Perilla frutescens)* having opposite leaves, a bell-shaped calyx, and flowers with a short, white, tubular corolla. It is widely cultivated as an ornamental and for its oily seeds. **2.** The oil from the seeds of this plant, widely used in the manufacture of paint, varnish, and artificial leather and as a substitute for linseed oil. [New Latin; genus name.]

per·il·ous (pĕr′ə-ləs) *adj.* Full of or involving peril; dangerous. —**per′il·ous·ly** *adv.* —**per′il·ous·ness** *n.*

per·i·lymph (pĕr′ə-lĭmf′) *n.* The fluid in the space between the membranous and bony labyrinths of the inner ear. —**per′i·lym·phat′ic** (-lĭm-făt′ĭk) *adj.*

pe·rim·e·ter (pə-rĭm′ĭ-tər) *n.* **1.** *Mathematics.* **a.** A closed curve bounding a plane area. **b.** The length of such a boundary. **2.** The outer limits of an area. See Synonyms at **circumference. 3.** A fortified strip or boundary usually protecting a military position. [Middle English *perimetre,* from Latin *perimetros,* from Greek : *peri-,* peri- + *metron,* measure; see METER[2].] —**per′i·met′ric** (pĕr′ə-mĕt′rĭk), **per′i·met′ri·cal** (-rĭ-kəl) *adj.* —**per′i·met′ri·cal·ly** *adv.*

per·i·morph (pĕr′ə-môrf′) *n.* A mineral that encloses a different mineral. —**per′i·mor′phic, per′i·mor′phous** *adj.* —**per′i·mor′phism** *n.*

per·i·my·si·um (pĕr′ə-mĭzh′ē-əm, -mĭz′ē-əm) *n., pl.* **-my·si·a** (-mĭzh′ē-ə, -mĭz′ē-ə). The sheath of connective tissue enveloping bundles of muscle fibers. [New Latin : PERI– + Greek *mus,* muscle; see **mūs-** in Appendix.]

per·i·na·tal (pĕr′ə-nāt′l) *adj.* Of, relating to, or being the period around childbirth, especially the five months before and one month after birth: *perinatal mortality; perinatal care.* —**per′i·na′tal·ly** *adv.*

per·i·na·tol·o·gy (pĕr′ə-nā-tŏl′ə-jē) *n.* The medical study of fetuses and infants during the perinatal period.

per·i·ne·a (pĕr′ə-nē′ə) *n.* Plural of **perineum.**

per·i·neph·ri·um (pĕr′ə-nĕf′rē-əm) *n., pl.* **-ri·a** (-rē-ə) The connective and fatty tissue surrounding a kidney. [New Latin, from Greek *perinephros,* fat around the kidneys : *peri-,* peri- + *nephros,* kidney.] —**per′i·neph′ral** (-nĕf′rəl), **per′i·neph′ri·al** (-rē-əl) , **per′i·neph′ric** (-rĭk) *adj.*

per·i·ne·um (pĕr′ə-nē′əm) *n., pl.* **-ne·a** (-nē′ə). **1.** The portion of the body in the pelvis occupied by urogenital passages and the rectum, bounded in front by the pubic arch, in the back by the coccyx, and laterally by part of the hipbone. **2.** The region between the scrotum and the anus in males, and between the posterior vulva junction and the anus in females. [Middle English, from Medieval Latin *perinaeon,* from Greek *perinaion* : *peri-,* peri- + *inan,* to excrete.] —**per′i·ne′al** (-nē′əl) *adj.*

per·i·neu·ri·um (pĕr′ə-nōōr′ē-əm, -nyōōr′-) *n., pl.* **-neu·ri·a** (-nōōr′ē-ə, -nyōōr′-). The sheath of connective tissue enclosing a bundle of nerve fibers. [New Latin : PERI– + Greek *neuron,* nerve; see NEURON.] —**per′i·neu′ri·al** *adj.*

pe·ri·od (pĭr′ē-əd) *n.* *Abbr.* **per. 1.** An interval of time characterized by the occurrence of a certain condition, event, or phenomenon: *a period of economic prosperity.* **2.** An interval of time characterized by the prevalence of a specified culture, ideology, or technology: *artifacts of the pre-Columbian period.* **3.** An interval regarded as a distinct evolutionary or developmental phase: *Picasso's early career is divided into his blue period and rose period.* **4.** *Geology.* A unit of time, longer than an epoch and shorter than an era. **5.** Any of various arbitrary units of time, especially: **a.** Any of the divisions of the academic day. **b.** *Sports & Games.* A division of the playing time of a game. **6.** *Physics & Astronomy.* The time interval between two successive occurrences of a recurrent event or phases of an event; a cycle. **7.** An instance or occurrence of menstruation. **8.** A point or portion of time at which something is ended; a completion or conclusion. **9.** The full pause at the end of a spoken sentence. **10.** A punctuation mark (.) indicating a full stop, placed at the end of declarative sentences and other statements thought to be complete, and after many abbreviations. **11.** A sentence of several carefully balanced clauses in formal writing. **12.a.** A metrical unit of quantitative verse consisting of two or more cola. **b.** An analogous unit or division of classical Greek or Latin prose. **13.** *Music* A group of two or more phrases within a composition, made up of 8 or 16 measures and terminating with a cadence. **14.** *Mathematics.* **a.** The least interval in the range of the independent variable of a periodic function of a real variable in which all possible

Case 1:04-cv-00874-GMS Document 108-8 Filed 03/04/2006 Page 37 of 37

ous stamens. —**pe·rig′·**

ēl′yən) *n., pl.* **-he·li·a** the sun in the orbit of a tion of New Latin *perihe-* ee **sāwel-** in Appendix.]

adj.

, -ən) *n., pl.* **-kar·y·a** containing the nucleus and ut; see KARYO-.] —**per′·**

nger. **b.** Exposure to the that endangers or involves so **-illed, -il·ling, -ils.** To ury; imperil. [Middle Eng- *riculum.* See **per-**[3] in Ap-

nual Asian plant (*Perilla* ell-shaped calyx, and flow- ia. It is widely cultivated as **2.** The oil from the seeds of icture of paint, varnish, and for linseed oil. [New Latin;

l or involving peril; danger- **·ous·ness** *n.*

e fluid in the space between s of the inner ear. —**per′·**

. *Mathematics.* **a.** A closed e length of such a boundary. Synonyms at **circumference;** ally protecting a military po- from Latin *perimetros,* from sure; see METER[2].] —**per′i·** **·met′ri·cal** (-rĭ-kəl) *adj.*

a mineral that encloses a dif- **hic, per′i·mor′phous** *adj.*

·əm, -mĭz′ē-əm) *n., pl.* **-my·** neath of connective tissue en- [New Latin : PERI- + Greek x-.]

Of, relating to, or being the y the five months before and *l mortality; perinatal care.*

ōl′ə-jē) *n.* The medical study perinatal period.

ral of **perineum.**

′rē-əm) *n., pl.* **-ri·a** (-rē-ə) rrounding a kidney. [New Lat- ound the kidneys : *peri-,* peri- + **′ral** (-nĕf′rəl), **per′i·neph′·** -rĭk) *adj.*

pl. **-ne·a** (-nē′ə). **1.** The occupied by urogenital passages by the pubic arch, in the back rt of the hipbone. **2.** The region in males, and between the pos- as in females. [Middle English, from Greek *perinaion* : *peri-* **′i·ne′al** (-nē′əl) *adj.*

′ē-əm, -nyōō′-) *n., pl.* **-ne·** sheath of connective tissue en- . [New Latin : PERI- + Greek **per′i·neu′ri·al** *adj.*

per. **1.** An interval of time of a certain condition, event, or ric *prosperity.* **2.** An interval of lence of a specified culture, ide- *the pre-Columbian period.* **3. a.** evolutionary or developmental *divided into his blue period and* of time, longer than an epoch and f various arbitrary units of time isions of the academic day. **b.** the playing time of a game. **c.** e interval between two successive : or phases of an event; a cycle. **7.** menstruation. **8.** A point or portion nded; a completion or conclusion. a spoken sentence. **10.** A punc- full stop, placed at the end of de- tatements thought to be complete. **11.** A sentence of several carefully- riting. **12.a.** A metrical unit of f two or more cola. **b.** An ancient d Greek or Latin prose. **13.** Music s within a composition, made up of ting with a cadence. **14.** *Mathe-* n the range of the independent var- nal variable in which all possible

values of the dependent variable are assumed. **b.** A group of digits separated by commas in a written number. **c.** The number of digits that repeat in a repeating decimal. For example, ⅓ = 0.142857142857 . . . has a six-digit period. **15.** *Chemistry.* A sequence of elements arranged in order of increasing atomic number and forming one of the horizontal rows in the periodic table. **—period** *adj.* Of, belonging to, or representing a certain historical age or time: *a period piece; period furniture.* [Middle English *periode,* from Old French, from Medieval Latin *periodus,* from Latin *perihodos,* rhetorical period, from Greek *periodos,* circuit : *peri-,* peri- + *hodos,* way.]

SYNONYMS: *period, epoch, era, age, term.* These nouns refer to a portion or length of time. *Period* is the most general: *a short waiting period; one of the most difficult periods of her life; worked for a period of ten years; the Romantic period in music. Epoch* refers to a period regarded as being remarkable or memorable: *"We enter on an epoch of constitutional retrogression"* (John R. Green). An *era* is a period of time notable because of new or different aspects or events: *"How many a man has dated a new era in his life from the reading of a book"* (Henry David Thoreau). An *age* is usually a period marked by a particular distinctive characteristic: *the age of Newton; the Iron Age. "These principles form the bright constellation which has . . . guided our steps through an age of revolution and reformation"* (Thomas Jefferson). A *term* is a period of time to which limits have been set: *Senators are elected for a term of six years.*

WORD HISTORY: Perhaps more than once one may have wondered why the word *period* has the sense "punctuation mark (.)" as well as some of its other senses having to do with time. The answer to this question lies in the senses of the Greek word *periodos* from which our word is descended. *Periodos,* made up of *peri-,* "around," and *hodos,* "way," meant such things as "going round, way round, going round in a circle, circuit," and with regard to time "cycle or period of time." The word also meant "the period of menstruation." In rhetoric it referred to "a group of words organically related in grammar and sense." The Greek word was adopted into Latin as *perihodos* with only its rhetorical sense and one other sense, but in Medieval Latin it reacquired senses it had in Greek, such as "cycle," and acquired a new sense, "a punctuation mark used at the end of a rhetorical period." Although this sense is recorded in Medieval Latin, it is not recorded in English until 1609. But the word *period* had entered Middle English from Medieval Latin and Old French, first being recorded in a work written around 1425 in the sense "a cycle of recurrence of a disease."

pe·ri·od·ic (pĭr′ē-ŏd′ĭk) *adj.* **1.** Having or marked by repeated cycles. **2.** Happening or appearing at regular intervals. **3.** Recurring or reappearing from time to time; intermittent. **4.** Characterized by periodic sentences. **—pe′ri·od′i·cal·ly** *adv.*

SYNONYMS: *periodic, sporadic, intermittent, occasional, fitful.* These adjectives all mean recurring or reappearing now and then. Something *periodic* occurs at regular or at least generally predictable intervals: *periodic feelings of anxiety. Sporadic* implies appearance or occurrence in scattered, irregular, unpredictable, or isolated instances: *a city subjected to sporadic bombing raids. Intermittent* describes something that stops and starts at intervals: *intermittent rain showers.* What is *occasional* happens at random and irregularly: *occasional outbursts of temper.* Something *fitful* occurs in spells and often abruptly: *fitful bursts of energy.*

USAGE NOTE: *Periodic* has long been used loosely to mean "occasional, intermittent," but this usage may be confusing for readers who are accustomed to using the word only in its narrower sense of "at regular or predictable intervals." Thus the writer who said *Parker's losses at the track were not covered by his periodic winners* invited the (most likely unintended) inference that Parker had a system that enabled him to pick winners at regular intervals. Substitution of *occasional* in this context would have resolved the ambiguity.

per·i·od·ic acid (pûr′ī-ŏd′ĭk) *n.* A white, crystalline inorganic acid, $HIO_4{\cdot}2H_2O$, used as an oxidizer.

pe·ri·od·i·cal (pĭr′ē-ŏd′ĭ-kəl) *adj.* **1.** Periodic. **2.a.** Published at regular intervals of more than one day. **b.** Of or relating to a publication issued at such intervals. **—periodical** *n.* A publication issued at regular intervals of more than one day.

periodical cicada *n.* A cicada of the genus *Magicicada* of the eastern United States whose 17-year or 13-year life cycle consists almost entirely of a nymphal stage spent underground. Upon emerging from this stage, the periodical cicada transforms into a winged adult, mates, lays eggs, and dies shortly thereafter. Also called *seventeen-year locust.*

pe·ri·o·dic·i·ty (pĭr′ē-ə-dĭs′ĭ-tē) *n., pl.* **-ties.** **1.** The quality or state of being periodic; recurrence at regular intervals. **2.** The tendency of chemical elements with similar positions in the periodic table to have similar properties. **3.** The position of an element in the periodic table.

pe·ri·od·ic law (pĭr′ē-ŏd′ĭk) *n. Chemistry.* The principle that the properties of the elements recur periodically as their atomic numbers increase.

pe·ri·od·ic sentence (pĭr′ē-ŏd′ĭk) *n.* A sentence in which the main clause or its predicate is withheld until the end, as in *Despite heavy winds, the plane landed safely.*

pe·ri·od·ic table (pĭr′ē-ŏd′ĭk) *n. Chemistry.* A tabular arrangement of the elements according to their atomic numbers so that elements with similar properties are in the same column.

per·i·o·don·tal (pĕr′ē-ə-dŏn′tl) *adj.* **1.** Surrounding or encasing a tooth: *a periodontal ligament.* **2.** Relating to or affecting tissue and structures surrounding and supporting the teeth. **—per′i·o·don′tal·ly** *adv.*

per·i·o·don·tia (pĕr′ē-ə-dŏn′shə) *n.* Periodontics.

per·i·o·don·tics (pĕr′ē-ə-dŏn′tĭks) *n. (used with a sing. verb).* The branch of dentistry that deals with the study and treatment of periodontal disease. **—per′i·o·don′tic, per′i·o·don′ti·cal** *adj.* **—per′i·o·don′tist** *n.*

per·i·o·nych·i·um (pĕr′ē-ō-nĭk′ē-əm) *n., pl.* **-i·a** (-ē-ə). The border of epidermal tissue surrounding a fingernail or toenail. [New Latin : PERI- + Greek *onux,* nail; see **nogh-** in Appendix.]

per·i·os·te·um (pĕr′ē-ŏs′tē-əm) *n., pl.* **-te·a** (-tē-ə). The dense fibrous membrane covering the surface of bones except at the joints and serving as an attachment for muscles and tendons. [New Latin, from Late Latin *periosteon,* from Greek, from *peri-osteos,* around the bone : *peri-,* peri- + *osteon,* bone; see **ost-** in Appendix.] **—per′i·os′te·al** (-tē-əl), **per′i·os′te·ous** (-tē-əs) *adj.*

per·i·os·ti·tis (pĕr′ē-ŏs-tī′tĭs) *n.* Inflammation of the periosteum. **—per′i·os·tit′ic** (-tĭt′ĭk) *adj.*

per·i·os·tra·cum (pĕr′ē-ŏs′trə-kəm) *n., pl.* **-ca** (-kə). The hard chitinous outer covering of the shell of many mollusks, especially freshwater ones, that protects the shell from the erosive action of water. [New Latin : PERI- + Greek *ostrakon,* shell; see OSTRACOD.]

per·i·ot·ic (pĕr′ē-ŏt′ĭk) *adj.* **1.** Situated around the ear. **2.** Of or relating to the bones immediately around the inner ear.

per·i·pa·tet·ic (pĕr′ə-pə-tĕt′ĭk) *adj.* **1.** Walking about or from place to place; traveling on foot. **2. Peripatetic.** Of or relating to the philosophy or teaching methods of Aristotle, who conducted discussions while walking about in the Lyceum of ancient Athens. **—peripatetic** *n.* **1.** One who walks from place to place; an itinerant. **2. Peripatetic.** A follower of the philosophy of Aristotle; an Aristotelian. [Middle English *peripatetik,* from Latin *peripatēticus,* from Greek *peripatētikos,* from *peripatein,* to walk about : *peri-,* peri- + *patein,* to walk; see **pent-** in Appendix.]

pe·rip·a·tus (pə-rĭp′ə-təs) *n.* See **onychophoran.** [New Latin *Peripatus;* genus name, from Greek *peripatos,* walking about, from *peripatein,* to walk about. See PERIPATETIC.]

per·i·pe·te·ia also **per·i·pe·ti·a** (pĕr′ə-pə-tē′ə, -tī′ə) *n.* A sudden change of events or reversal of circumstances, especially in a literary work. [Greek, from *peripiptein,* to change suddenly : *peri-,* peri- + *piptein,* to fall; see **pet-** in Appendix.]

pe·rip·e·ty (pə-rĭp′ĭ-tē) *n.* Peripeteia. [French *péripétie,* from Greek *peripeteia.* See PERIPETEIA.]

pe·riph·er·al (pə-rĭf′ər-əl) *adj.* **1.** Related to, located in, or constituting an outer boundary or periphery. **2.** Perceived or perceiving near the outer edges of the retina: *peripheral vision.* **3.** *Anatomy.* **a.** Of the surface or outer part of a body or organ; external. **b.** Of, relating to, or being part of the peripheral nervous system. **4.** Of minor relevance or importance. **5.** Auxiliary. **—peripheral** *n. Computer Science.* An auxiliary device, such as a printer, modem, or storage system, that works in conjunction with a computer. **—pe·riph′er·al·ly** *adv.*

peripheral nervous system *n.* The part of the vertebrate nervous system constituting the nerves outside the central nervous system and including the cranial nerves, the spinal nerves, and the sympathetic and parasympathetic nervous systems.

pe·riph·er·y (pə-rĭf′ə-rē) *n., pl.* **-ies.** **1.** A line that forms the boundary of an area; a perimeter. See Synonyms at **circumference.** **2.** The surface of a solid. **3.a.** The outermost part or region within a precise boundary. **b.** A zone constituting an imprecise boundary. [Middle English *periferie,* from Medieval Latin *peripheria,* from Late Latin *peripheria,* from Greek *peripereia,* from *peripherēs,* carrying around : *peri-,* peri- + *pherein,* to carry; see **bher-**[1] in Appendix.]

pe·riph·ra·sis (pə-rĭf′rə-sĭs) *n., pl.* **-ses** (-sēz′). **1.** The use of circumlocution. **2.** A circumlocution. [Latin, from Greek, from *periphrazein,* to express periphrastically : *peri-,* peri- + *phrazein,* to say; see **gʷhren-** in Appendix.]

per·i·phras·tic (pĕr′ə-frăs′tĭk) *adj.* **1.** Having the nature of or characterized by periphrasis. **2.** *Grammar.* Constructed by using an auxiliary word rather than an inflected form; for example, *of father* is the periphrastic possessive case of *father* but *father's* is the inflected possessive case, and *did say* is the periphrastic past tense of *say* but *said* is the inflected past tense. **—per′i·phras′ti·cal·ly** *adv.*

pe·riph·y·ton (pə-rĭf′ĭ-tŏn′) *n.* Sessile organisms, such as algae and small crustaceans, that live attached to surfaces projecting from the bottom of a freshwater aquatic environment. [New Latin, from Greek *periphuton,* from neuter sing. of *periphutos,* planted all over, from *periphuein,* to grow around, cling to : *peri-,* peri- + *phuein,* to grow; see **bheu-** in Appendix.]

per·i·plasm (pĕr′ə-plăz′əm) *n.* The region near or immediately within a bacterial or other cell wall, outside the plasma membrane. **—per′i·plas′mic** *adj.*

per·i·plast (pĕr′ə-plăst′) *n.* **1.** An outer layer surrounding the



periodical cicad

ă pat	oi boy
ā pay	ou ou
âr care	o͝o to
ä father	o͞o bo
ĕ pet	ŭ cut
ē be	ûr ur
ĭ pit	th thi
ī pie	*th* thi
îr pier	hw w
ŏ pot	zh vi
ō toe	ə abc
ô paw	◆ re

Stress marks: ′ (secondary), as dictionary (dĭk′