IN THE UNITED STATES DISTRICT COURT
FOR THE DISTRICT OF DELAWARE

TELCORDIA TECHNOLOGIES, INC., *Plaintiff, Counterclaim-Defendant,* vs. ALCATEL USA, INC., *Defendant, Counterclaim-Plaintiff.*	Case No. 04-CV-874 GMS

ALCATEL'S OPENING CLAIM CONSTRUCTION
BRIEF FOR U.S. PATENT NOS. 6,247,052 AND RE. 36,633

Josy W. Ingersoll (I.D. No. 1088)
Adam W. Poff (I.D. No. 3990)
YOUNG CONAWAY STARGATT & TAYLOR, LLP
The Brandywine Building
1000 West St.
Wilmington, DE 19801
(302) 571-6672

Attorneys for Defendant / Counterclaim Plaintiff Alcatel USA, Inc.

OF COUNSEL:

Stuart J. Sinder
Michelle Carniaux
Lewis V. Popovski
Mark A. Hannemann
Clement J. Naples
KENYON & KENYON LLP
One Broadway
New York, NY 10004
(212) 425-7200

Dated: March 3, 2006

TABLE OF CONTENTS

ALCATEL'S U.S. PATENT NO. 6,247,052 1

SUMMARY OF ARGUMENT 1

I. STATEMENT OF FACTS 2

A. Background of the Technology 2

B. The Specification of the '052 Patent 3

C. Prosecution of the '052 Patent 4

II. ARGUMENT 6

A. The Law of Claim Construction 6

B. Alcatel's Proposed Claim Construction 6

1. "Telecommunications Switching System" 7

2. "Remote Computer" 9

3. "Accessing a Server with Said Browser" 10

4. "Providing a Copy of the Application Program from Said Server to Said Remote Computer" 14

5. "Accessing Said Telecommunications Switching System with Said Application Program from Said Remote Computer" 14

6. "System Manager Building Block" 15

7. "Communicating With a System Manager Building Block of the Telecommunications Switching System from Said Remote Computer" 16

8. "Monitoring" 17

9. "Hypertext Markup Language (HTML) Server" 18

10. "Java Applet" 18

TELCORDIA'S '633 PATENT 20

SUMMARY OF ARGUMENT 20

III. STATEMENT OF FACTS – BACKGROUND OF TECHNOLOGY 20

IV. ARGUMENT 23

A. Alcatel's Proposed Claim Constructions 23

1. "transmitting . . . an RTS" [claims 1, 5, 11, 33] 23

2. "transmitting means," "means for transmitting," and "receiving means" 25

3. "residual time stamp (RTS)" 28

4. "2^p counts uniquely and unambiguously represent the range of possible network clock cycles within an RTS period" (claims 1 and 5) 29

5. "At the end of each RTS period" 31

6. "network clock" and "derived network clock" 32

7. "the period between each pulse" (claim 1) / "the periods between pulses" (claim 5) 34

8. "means, at the source node, for defining a derived network clock frequency f_{nx} from a network frequency fn where $f_{nx} = f_n/x$, x is a rational number, and f_{nx} is less than or equal to twice the service clock frequency" 36

9. "counting means" and "converting means" 37

10. "means, at the source node, for counting the derived network clock cycles modulo 16 in an RTS period" (claim 11) 39

V. CONCLUSION 40

TABLE OF AUTHORITIES

Cases

Amgen Inc. v. Hoechst Marion Roussel, Inc.,
314 F.3d 1313 (Fed. Cir. 2003) 11

Astrazeneca AB v. Mutual Pharm. Co.,
384 F.3d 1333 (Fed. Cir. 2004) 25

Atmel Corp. v. Information Storage Devices, Inc.,
198 F.3d 1374 (Fed. Cir. 1999) 26

Curtiss-Wright Flow Control Corp. v. Velan, Inc.,
2006 U.S. APP. LEXIS 3521, (Fed. Cir. Feb. 15, 2006) 25

Dayco Prods., Inc. v. Total Containment, Inc.,
258 F.3d 1317 (Fed. Cir. 2001) 8, 16

Default Proof Credit Card Sys., Inc. v. Home Depot U.S.A., Inc.,
412 F.3d 1291 (Fed. Cir. 2005) ..... passim

Honeywell Int'l, Inc. v. Int'l Trade Comm'n,
341 F.3d 1332 (Fed. Cir. 2003) 30

Innova/Pure Water, Inc. v. Safari Water Filtration Sys., Inc.,
381 F.3d 1111 (Fed. Cir. 2004) 30

Intervet America, Inc. v. Kee-Vet Labs., Inc.,
887 F.2d 1050 (Fed. Cir. 1989) 13

JVW Enters. v. Interact Accessories, Inc.,
424 F.3d at 1324 (Fed. Cir. 2005) 27, 38

K-2 Corp. v. Salomon S.A.,
191 F.3d 1356 (Fed. Cir. 1999) 32

Kemco Sales, Inc. v. Control Papers Co.,
208 F.3d 1352 (Fed. Cir. 2000) 27

Kumar v. Ovonic Battery Co.,
351 F.3d 1364 (Fed. Cir. 2003) 7

Lizardtech, Inc. v. Earth Resource Mapping, Inc.,
424 F.3d 1336 (Fed. Cir. 2005) 24

Med. Instrumentation & Diagnostics Corp. v. Elekta AB,
344 F.3d 1205 (Fed. Cir. 2003) 27

Merck & Co. v. Teva Pharms USA, Inc.,
395 F.3d 1364 (Fed. Cir. 2005) 30, 33

Pause Tech. LLC v. TiVo Inc.,
419 F.3d 1326 (Fed. Cir. 2005) 33

Pfizer, Inc. v. Teva Pharms. USA, Inc.,
429 F.3d 1364 (Fed. Cir. 2005) 11, 12

Phillips v. AWH Corp.,
415 F.3d 1303 (Fed. Cir. 2005) ..... passim

Prima Tek II, L.L.C. v. Polypap, S.A.R.L.,
318 F.3d 1143 (Fed. Cir. 2003) 11

Rambus Inc. v. Infineon Tech. AG,
318 F.3d 1081 (Fed. Cir. 2003) 13

SciMed Life Sys., Inc. v. Advanced Cardiovascular Sys., Inc.,
242 F.3d 1337 (Fed. Cir. 2001) 24

Storage Tech. Corp. v. Cisco Sys., Inc.,
329 F.3d 823 (Fed. Cir. 2003) 13

Teleflex, Inc. v. Ficosa North America Corp.,
299 F.3d 1313 (Fed. Cir. 2002) 12

Vitronics Corp. v. Conceptronic, Inc.,
90 F.3d 1576 (Fed. Cir. 1996) 11

Statutes

35 U.S.C. § 112, ¶ 2 ..... passim
35 U.S.C. § 112, ¶ 6 ..... passim

Defendant/Counterclaim-Plaintiff Alcatel USA, Inc. ("Alcatel") respectfully submits this opening claim construction brief setting forth its proposed constructions of the disputed terms and phrases in Alcatel's U.S. Patent No. 6,247,052 (the "'052 patent"), and in Telcordia's U.S. Patent No. Re. 36,633 (the "'633 patent"). Alcatel herein relies on, adopts, and joins Lucent Technologies Inc.'s Opening Claim Construction Brief regarding U.S. Patent No. 4,863,306 (the "Lucent Brief") filed concurrently by Lucent Technologies, Inc. in 04-CV-875.

NATURE AND STAGE OF THE PROCEEDING

On February 17, 2006, the parties submitted a Final Joint Claim Chart to the Court (D.I. 98).[1] This memorandum of law addresses the ten claim terms and phrases identified on the Chart with respect to the '052 patent and the fourteen terms and phrases identified on the Chart with respect to the '633 patent whose construction is disputed.

ALCATEL'S U.S. PATENT NO. 6,247,052

SUMMARY OF ARGUMENT

Alcatel has proposed constructions of the disputed terms and phrases that comport with their ordinary meaning. Indeed, for some non-technical terms, that ordinary meaning is so clear that further construction can only confuse the issues and, therefore, is not even needed. Telcordia's proposed constructions of terms in Alcatel's '052 patent seek to limit the scope of the invention by impermissibly reading in limitations based solely on a distorted reading of the prosecution history of the '052 patent. Some of the limitations Telcordia seeks to import into the claims would exclude and leave unprotected the specifically disclosed embodiment they were intended to cover. Telcordia's proposed constructions should be rejected, and the Court should construe the disputed '052 patent terms and phrases as Alcatel proposes.

[1] The Joint Claim Chart is attached hereto as Ex. 1 for the Court's convenience.

I. STATEMENT OF FACTS

A. Background of the Technology

The '052 patent (attached as Ex. 2) relates generally to telecommunications switching systems. (*See, e.g.*, Ex. 2, col. 1, ll. 7-8). These complex systems allow, for example, a telephone call or data transmission to be routed (or "switched") from one transmission line to another in order for it to reach a desired location. The asserted claims encompass a system that provides users with the ability to administer a modern telecommunications switching system from any desired location using a standard computer and even a laptop.

Conventional telecommunications systems had highly centralized switching facilities where the calls from a large geographic area were fed into a single facility for routing to other centralized switching facilities. (Ex. 2, col. 1, ll. 14-23). Having centralized switching facilities made it more convenient and less costly to monitor, test, repair and administer these large and complex systems. However, the centralized nature of these systems also resulted in undesirable lengthy switching paths which degraded the quality of the telecommunication service. (Ex. 2, col. 1, ll. 14-16). This shortcoming and others led to the advent of decentralized systems called "distributed telecommunication switching systems" (Ex. 2, col. 1, ll. 16-20), which may be scattered throughout a wide geographical area.

The rise in popularity of distributed telecommunications switching systems, however, came at a cost. It was not easy or convenient to monitor, test, repair and administer these systems. Complex interface systems had to be developed to provide users with the ability to control, configure and monitor such distributed switching systems, but they could only do so through dedicated terminals located at specific locations.

The '052 patent solves, *inter alia*, these problems by providing a switch management system that allows unfettered access by authorized users to a telecommunications switching system "for any desired purpose, such as to monitor, control or reconfigure the telecommunications switching system" and to do so from any location. (Ex. 2, col. 1, ll. 60-67).

B. The Specification of the '052 Patent

The '052 patent overcomes the shortcomings associated with prior ways of administering these complex systems by providing users the ability to "access the telecommunications switching system from any remote location using a standard remote computer having a browser." (Ex. 2, col. 1, ll. 64-67). In the method and system of the '052 patent:

> [T]he remote computer uses the browser and a communications link to access a remote server which contains [an] application program necessary for a user of the remote computer to remotely access the telecommunications switching system. The remote server then provides a copy of the application program to the remote computer, typically in the form of a Java Applet. The remote computer runs the application program . . . and accesses a system manager. . . . (Ex. 2, col. 1, l. 67 to col. 2, l. 8).

The '052 patent provides numerous examples of how the invention may be used. For example, Figure 1 (a portion of which is provided below) shows how a user can remotely control the numerous, geographically dispersed subsystems of a distributed telecommunications switching system:

FIG. 1

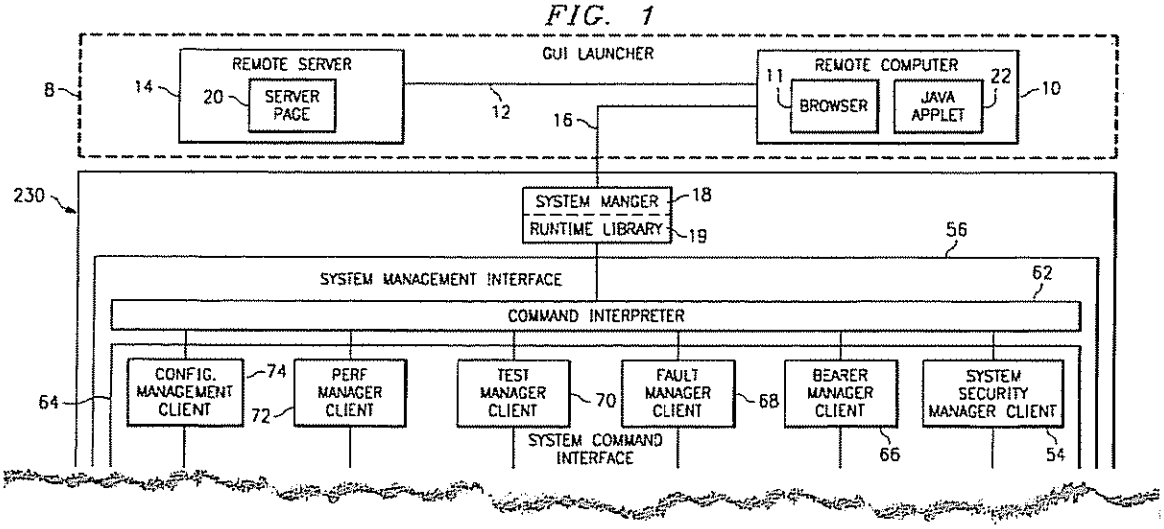

Figure 1 depicts a block diagram of the Telecommunications Switch Management System of a particular embodiment of the claimed invention, including the various software building blocks which make up this Management System.[2] These "building blocks" include System

[2] The specification defines a "building block" as "one or more software objects and routines which can be deployed, upgraded and maintained in a software repository, and which also can be used by

Manager 18 which provides the interface between the remote computer and much of the Management System. (*See* Ex. 2, col. 4, l. 63 to col. 5, l. 4).

The specification details and explains the way a user can remotely communicate with the Telecommunications Switch System as follows:

> A user at Remote Computer 10 initiates a system access session by establishing communication over link 12 with Remote Server 14. In response, Remote Server 14 downloads the application program to Remote Computer 10, which enables Remote Computer 10 to communicate with Telecommunications Switching System 230. Although this application program generally may be of any type, it typically is in the form of a Java Applet 22. Once Java Applet 22 has been loaded into Remote Computer 10, Remote Computer 10 can communicate . . . with the Telecommunications Switching System 230 through communications link 16 and System Manager 18. (Ex. 2, col 5. ll. 21-34).

In this way, a user can monitor and administer this highly complex and geographically distributed telecommunications switching system.

C. Prosecution of the '052 Patent

The application for the '052 patent was filed on December 23, 1997, and contained thirty (30) claims. Three independent claims – claims 1, 17, and 27 – were presented for examination. These application claims issued as '052 patent claims 1, 17, and 27, respectively.

In an Office Action dated August 11, 1999, claims 1-30 were rejected as being "unpatentable" over U.S. Patent No. 5,870,558 to Branton ("Branton"), in view of U.S. Patent No. 5,915,085 to Koved ("Koved"). (Ex. 3, pp. 3-4). In applying to the claims the references relied upon, the Examiner made assertions of a general nature and did not specifically address the claims on an individual basis. (Ex. 3, pp. 3-4).

In the Response filed November 10, 1999, claim 1 was amended to recite "first" and "second public communications link[s]." (Ex. 4, p. 2). No amendments were made to claim 17, which is the only independent claim at issue in this lawsuit. (Ex. 4, p. 5).

---

applications, either alone or in combination, in order to perform specific functions or operations." (Ex. 2, col 4, ll. 54-59).

In another Office Action dated January 24, 2000, claims 1-30 were again rejected over Branton in view of Koved and, as with the first Office Action, the Examiner made assertions of a general nature, but did not specifically address the claims on an individual basis. (Ex. 5, pp. 3-6).

In the Response filed on April 10, 2000, the Applicant addressed the Examiner's general discussion of the applied references in the context of claim 1 and distinguished them on several grounds, including the fact that they did not disclose communication with a telecommunications switch system over a "first" and "second" communications link:

> [T]he Examiner has not shown where the Branton, Jr., et al. patent shows a remote computer with a first communication link to web server 284 and with a separate second communication link to controllers 271-273 as would be required by the claimed invention. . . . Thus, the Branton, Jr., et al. patent does not provide the access to a telecommunication switching system from a stand alone remote computer as specified by the claimed invention (Ex. 6, p. 10).

While claim 1 was amended to add the "first" and "second communications link[s]" (*see* Ex. 5, p. 2), claim 17, the claim being asserted herein, was *not* amended, thereby remaining as originally filed. (Ex. 6, p. 5).

In the last Office Action dated August 4, 2000, claims 1-30 were rejected as being obvious over a new reference, U.S. Patent No. 6,035,332 to Ingrassia, Jr. (Ex. 7, p. 2).

In the Response filed on November 9, 2000, the Applicant distinguished Ingrassia for various reasons and generally characterized the amalgamation of the various features of the three claims as follows:

> Independent Claims 1, 17, and 27 recite *in general* the ability to access a telecommunications switching system for monitoring purposes over a second communication link from a remote computer independently from a server upon receiving an application program from the server over a first communication link separate from the second communication link. (Ex. 8, p. 9) (emphasis added).

It is important to note that, at that time and as ultimately issued, only claims 1 and 27 – and not claim 17, which is the only independent claim being asserted in this lawsuit – make reference to "communications links." (*Compare* '052 Patent Application Claims 1 and 27 *with* Application

Claim 17, reproduced for the Court's convenience at Ex. 9). From its first submission for review, claim 17 never included such a limitation and no such limitation was ever added during prosecution.

On January 12, 2001, the Examiner issued a Notice of Allowability in response to the Applicant's November 9, 2000 Response. (Ex. 10). The '052 patent issued on June 12, 2001.

II. ARGUMENT

A. The Law of Claim Construction

Claim construction analysis begins with the words of the claim. *Phillips v. AWH Corp.*, 415 F.3d 1303, 1312 (Fed. Cir. 2005) (*en banc*). Claim terms take on their ordinary and customary meaning as understood by a person of ordinary skill in the art at the time of invention. *See id.* at 1312-13. One of the most important tools in understanding what the claims mean is the specification, which is "always highly relevant to the claim construction analysis. Usually, it is dispositive; it is the single best guide to the meaning of a disputed term." *Id.* at 1315. While serving as a guide to claim construction, limitations found only in the specification are not to be read into the claims. *See id.* at 1323. The prosecution history should also be considered because it can be useful in determining whether the inventor limited the invention during prosecution, thereby making the claim scope narrower than it would otherwise be. *See id.* at 1317. Finally, dictionaries, especially technical dictionaries, may be consulted if the Court deems such sources helpful in determining the meaning of the language used in the claims, "so long as the dictionary definition does not contradict any definition found in or ascertained by a reading of the patent documents." *Id.* at 1322-23.

B. Alcatel's Proposed Claim Construction

Alcatel has asserted independent claim 17 and its dependent claims 18, 19 and 24 as being infringed. Most of the disputed terms and phrases are found in claim 17, and are discussed below.

1. "Telecommunications Switching System"

Proposed Construction: A telecommunication system for establishing and releasing connections among telecommunication transmission paths.

The phrase "telecommunications switching system" is found throughout claim 17 and in dependent claim 18. Alcatel's proposed construction comports with the specification and with how a person of ordinary skill in the art would have understood that term at the time the '052 patent was filed. For example, THE NEW IEEE STANDARD DICTIONARY OF ELECTRICAL AND ELECTRONIC TERMS (6th ed. 1996) (the "IEEE dictionary," Ex. 11)[3] evidences how technical terms would have been understood by artisans at the time. It defines the term "telecommunications switching" as "[t]he function of selectively establishing and releasing connections among telecommunication paths." (Ex. 11, p. 1088). Alcatel's proposed construction is true to this definition which was adopted by those skilled in the art. Indeed, except for including the term "transmission," Alcatel's definition corresponds word for word to this IEEE definition.

In addition to the IEEE dictionary, references cited in the '052 patent provide further evidence of what the term "telecommunications switching system" meant to persons skilled in the art at the time of invention. *See, e.g., Kumar v. Ovonic Battery Co.*, 351 F.3d 1364, 1368 (Fed. Cir. 2003) ("prior art cited in a patent or cited in the prosecution history of the patent constitutes intrinsic evidence. . . . [and] can have particular value as a guide to the proper construction of the term, because it may indicate not only the meaning of the term to persons skilled in the art, but also that the patentee intended to adopt that meaning"). For instance, Alcatel's construction for this term is consistent with a description of a telecommunications switching system in U.S. Patent No. 5,495,484 to Self, which was incorporated by reference in the '052 patent. (Ex. 2, col. 4, ll. 39-42). The Self patent shows that a telecommunications switching system establishes and releases switch connections: "[the subsystems] perform[] switching connections for end users in a switch function

---

[3] THE NEW IEEE STANDARD DICTIONARY OF ELECTRICAL AND ELECTRONIC TERMS is published by the Institute of Electrical and Electronics Engineers whose standards "represent a consensus of the broad expertise on the subject within the Institute. . . ." *See, e.g.*, THE NEW IEEE STANDARD DICTIONARY OF ELECTRICAL AND ELECTRONIC TERMS (5th ed. 1993) (Ex. 12). The manner in which the dictionary definitions are decided remains the same. (Ex. 11).

. . . in order to interface with . . . distributed center stage switching subsystem 18." (Ex. 13, col. 4, ll. 29-35). Thus, the IEEE dictionary definition and the Self patent each show that Alcatel's construction reflects the understanding that a person of ordinary skill in the art would have had at the time the patent application was filed.

The '052 patent itself uses the phrase "telecommunications switching system" in many instances, and in each instance its use comports with the term's well-known and customary meaning. For example, Figure 14 shows a "SONET ATM Interconnect Control and Transport" telecommunications switching system that includes a Fiber Optic Ring (236) for providing "transmission and dual physical path transmission" between subsystems. (Ex. 2, Fig. 14, col. 4, ll. 19-22).

In contrast, Telcordia's proposed construction – "a system that includes one or more switch fabrics for processing call information and a central unit for control and management of the calls" – ignores the established meaning and improperly imports limitations from the specification into the claim. Indeed, Telcordia's proposed limitation of "includes one or more switch fabrics" does not provide any clarity and only serves to confuse – it is unlikely that a lay jury will understand what Telcordia means by its use of the term "switch fabrics." Defining a term with another term that itself should be defined should be avoided. *See Dayco Prods., Inc. v. Total Containment, Inc.*, 258 F.3d 1317, 1324 (Fed. Cir. 2001) (unhelpful arguments should be avoided).

Still further, Telcordia improperly adds the phrase "call information" to its construction, which may mislead a lay juror into believing that the claimed invention is limited to telephone "calls." There is no such limitation as the specification clearly explains, for example, that the system "*can provide multiple services including broadband, video*, conventional telephone, and personal communications services to consumers. . . ." (Ex. 2, col. 3, l. 63 to col. 4, l. 1) (emphasis added).

Telcordia's construction also adds the phrase of "a central unit for control and management of the calls," which does not appear anywhere in claim 17. This is not surprising, as the specification of the '052 patent contrasts the "conventional" telecommunications systems that

"employ centralized switching systems" with those of the disclosed embodiments: "[I]t is desirable to implement distributed telecommunications switching systems which do not require centralized switching facilities." (Ex. 2, col. 1, ll. 14-18). Adding a "central" control and management unit" to the claims would be contrary to the teachings of the specification and contrary to the fundamental nature of the invention, and should therefore be rejected.

2. **"Remote Computer"**

Proposed Construction: A computer that is separate from the telecommunications switching system.

The term "remote computer" is recited in claim 17, as well as dependent claims 18 and 24. Alcatel submits that the term "computer," in and of itself, needs no construction. It is the pairing of "computer" with "remote" that creates the need for construction. Without a proper construction, the phrase "remote computer" might be mistakenly understood to mean that the computer must be at a particular geographical location that is different from that of the telecommunications switching system, as Telcordia apparently urges. However, any such definition would be inconsistent with the teachings of the specification, which expressly provide that the "remote computer" equipped with the browser allows a user to be located *anywhere*:

> A technical advantage of the GUI launcher of the present invention is the GUI launcher's ability to provide users access to telecommunications switching systems *from any desired remote location* having a remote computer.

(Ex. 2, col. 2, ll. 34-37, emphasis added; *see also* col. 5, ll. 41-45) ("[A]uthorized users located *anywhere* can access the Telecommunications Switching System 230 for all of the same purposes as could a user of a dedicated terminal located proximate to the Telecommunications Switching System 230.") (emphasis added). The absence of any geographic limitation is made even more compelling by the fact that the specification expressly states that the remote computer may be "a portable PC such as a laptop." (Ex. 2, col. 5, ll. 61-66). Obviously, the laptop computer may be placed anywhere, including in the same facility as the switching system.

Finally, the specification directly negates any geographical limitation to the term "remote" by stating that the "remote" server can be located within the telecommunications system itself:

> Although Remote Server 14 generally can be located anywhere, as depicted in Fig. 1, Remote Server 14 may for example be configured to be *included within* System Manager 18. . . .

(Ex. 2, col. 5, ll. 50-54) (emphasis added). This specification teaching should alone dispose of the issue. *See Phillips*, 415 F.3d at 1315 ("[T]he specification is always highly relevant to the claim construction analysis. Usually, it is dispositive; it is the single best guide to the meaning of a dispute term."). If the "Remote Server" can be located within the telecommunication system, so too can the "remote" computer.

Telcordia's construction – "a computer located at a location that is remote from the telecommunication switching system being monitored" – is not helpful because it circularly uses the word "remote" in its construction of "remote computer." There is no guidance by Telcordia as to what the word "remote" means, and this is the heart of the disputed claim term. Certainly, the claim does not limit where the remote computer is to be located, which is consistent with the specification's disclosure of "any desired location." All that is required by the claim (and by the specification) is that the computer and the telecommunications switching system that it monitors are separated.

Thus, while the "remote computer" can be located at different geographic locations than the "telecommunications switching system" of the claims, it does not have to be. Indeed, the most authoritative evidence (namely, the specification) teaches that the remote computer can even be in the same room as the telecommunications switching system, much like a television remote control is in the same room as the television. (Ex. 2, col. 5, ll. 41-46).

3. "Accessing a Server with Said Browser"

Proposed Construction: Communicating with a server using a browser.

The term "accessing a server with said browser" is found in claim 17. Alcatel's construction focuses on the term "accessing" and seeks to define this non-technical term in

accordance with its ordinary meaning. A person of ordinary skill in the art would have understood then, as today, that "accessing" a server simply means to communicate with the server. *See, e.g.*, MERRIAM WEBSTER'S COLLEGIATE DICTIONARY 6 (10th ed. 1997) (Ex. 14) (defining "access" as "permission, liberty, or ability to enter, approach, communicate with, or pass to and from"). This definition is consistent with its use in the '052 patent.

Tellingly, Telcordia's proposed "construction" does not actually construe the claim term that is being disputed. Rather, Telcordia's proposed construction – "using the browser to access a server through a first communications link" – uses the same words as the phrase to be construed and unashamedly adds the apparitional limitation of "through a first communications link" to the claim. This litigation-induced construction must fail.

First, it should be clear that while claims 1 and 27 do contain limitations directed to "first" and "second communication links," claim 17 – the only independent claim at issue here – does not. The differences between these claims highlight the different subject matter they cover. *See Phillips*, 415 F.3d at 1323 ("The manner in which the patentee uses a term within the specification and claims usually will make the distinction apparent."). There are legions of Federal Circuit cases rejecting attempts to import limitations where they do not exist in the claims. *See, e.g., Amgen Inc. v. Hoechst Marion Roussel, Inc.*, 314 F.3d 1313, 1326 (Fed. Cir. 2003) ("The plain meaning of the claims controls here and they plainly are not so limited."); *Prima Tek II, L.L.C. v. Polypap, S.A.R.L.*, 318 F.3d 1143, 1151 (Fed. Cir. 2003) ("the claims of a patent are not limited to the preferred embodiment, unless by their own language").

Second, the absence of these limitations from claim 17 is not an accident. Claim 17 encompasses a particular embodiment that under Telcordia's construction would be improperly excluded from coverage under any claim. *See, e.g., Pfizer, Inc. v. Teva Pharms. USA, Inc.*, 429 F.3d 1364, 1374 (Fed. Cir. 2005) ("A claim construction that excludes a preferred embodiment . . . is 'rarely, if ever, correct.'") (quoting *Vitronics Corp. v. Conceptronic, Inc.*, 90 F.3d 1576, 1583 (Fed. Cir. 1996)). Here, the specification details an embodiment that has only a single

communications link, rather than the two links that Telcordia is attempting to add into claim 17 in a desperate and transparent attempt to distance itself from its infringement problems:

> Although Remote Server 14 generally can be located anywhere, as depicted in FIG. 1, Remote Server 14 may for example be configured to be included within System Manager 18. Remote Computer 10 would communicate with System Manager 18, and also with Remote Server 14 contained therein, via communications link 16. *Communications link 12 therefore would not be required.* (Ex. 2, col. 5, ll. 50-60) (emphasis added).

Telcordia's construction would leave the single communication link embodiment uncovered by any claim. To do so would be improper. *Pfizer*, 429 F.3d at 1374.

It is expected that Telcordia will argue that the "first communication link" and the "second communication link" limitations should be included within claim 17 under the doctrine of prosecution history estoppel. In doing so, however, Telcordia would run afoul of Federal Circuit precedent that is directly on point.

Prosecution history estoppel operates to limit the scope of a claim only when the patentee has clearly and unequivocally disavowed subject matter during prosecution. *See Phillips*, 415 F.3d at 1319 (prosecution history estoppel applies "if the inventor has disavowed or disclaimed scope of coverage, *by using words or expressions of manifest exclusion or restriction*, representing a *clear disavowal* of claim scope") (emphasis added); *Teleflex, Inc. v. Ficosa North America Corp.*, 299 F.3d 1313, 1326 (Fed. Cir. 2002) ("the prosecution history may demonstrate that the patentee intended to deviate from a term's ordinary and accustomed meaning, i.e., if it shows the applicant characterized the invention using words or expressions of manifest exclusion or restriction"). There was no such disavowal here. As explained above, during the prosecution of the '052 patent, claims 1 and 27 were amended and distinguished over the applied references based on the two communications links – but claim 17 was not. (*See* Ex. 9).

In the only remarks that include claim 17, the Applicant alluded, in a generalized manner, to an amalgamation of the various features of the three independent claims:

> Independent Claims 1, 17, and 27 recite *in general* the ability to access a telecommunications switching system for monitoring purposes over a second

> communication link from a remote computer independently from a server upon receiving an application program from the server over a first communication link separate from the second communication link. (Ex. 8, p. 9) (emphasis added).

In view of the explicit language of claims 1 and 27 including two communication links (as compared to that of claim 17, which does not), Applicant's generalized statement is not and cannot be a clear, express and unambiguous disavowal of the scope of what claim 17 covers. *See Phillips*, 415 F.3d at 1319.

But even if it were assumed that the Applicant's remarks were specifically directed to claim 17 in the above statement, Telcordia's construction would still be improper. Under this assumption, the attorney's remarks would simply be incorrect, because claim 17 did not – and as issued does not – include the "communication links" limitations. Indeed, in this scenario, the most that might be said is that the prosecuting attorney may have mistakenly thought the limitations were there. However, the Federal Circuit has repeatedly held that the mistaken remarks of an attorney during prosecution cannot and does not control the scope of the claim.

For example, in *Intervet America, Inc. v. Kee-Vet Labs., Inc.*, 887 F.2d 1050, 1054 (Fed. Cir. 1989), the prosecuting attorney had amended three of the claims to recite a "single administration" of a vaccine, but did not so amend the remaining claims. *See id.* However, in his remarks, the attorney inaccurately described *all* the claims as "restricted to a single vaccination scheme." *See id.* Like Telcordia, the defendant in *Intervet* sought to narrow the claim based on the attorney's characterizing remarks. In construing the claim terms, the Federal Circuit made clear that the actual wording of the claims controls and not the attorney's erroneous remarks:

> When it comes to the question of which should control, an erroneous remark by an attorney in the course of prosecution of an application or the claims of the patent as finally worded and issued by the Patent and Trademark Office as an official grant, we think the law allows for no choice. *The claims themselves control.*

Id. (emphasis added). The Federal Circuit has so held each time the issue has arisen. *See Storage Tech. Corp. v. Cisco Sys., Inc.*, 329 F.3d 823, 832 (Fed. Cir. 2003) ("During prosecution, the patent applicants stated that in the invention as recited in claims 1, 11 and 18, the instance of network

policy and the policy identification information are both cached. While on its face this statement appears to limit claim scope, it cannot do so absent some claim language referring to the caching of the instance of network policy."); *Rambus Inc. v. Infineon Tech. AG*, 318 F.3d 1081, 1090 (Fed. Cir. 2003) (finding no justification to read unstated limitations into claim despite attorney's incorrect description of the claims).

For all the forgoing reasons, Telcordia's efforts to improperly read limitations into claim 17 (and its dependent claims) must be rejected.

4. **"Providing a Copy of the Application Program from Said Server to Said Remote Computer"**

Proposed Construction: Plain and ordinary meaning; does not require additional construction.

Alcatel does not believe the phrase "providing a copy of the application program from said server to said remote computer" in claim 17 needs to be construed because there is nothing ambiguous about this claim feature. It plainly states that the server provides a copy of the application program to the remote computer, and rewording it does not and cannot offer any further clarity.

Indeed, Telcordia's construction – "providing an application program from the server to the remote computer through the first communication link" – is simply a restatement of the claim terms and another opportunity for Telcordia to once again improperly import its "communication link" non-infringement theory into claim 17. For the same reasons discussed above in Section E.3 (discussed in connection with the claim 17 feature of "accessing a server with said browser," *supra* pages 10-14), Telcordia's efforts to import these claim limitations should be rejected.

5. **"Accessing Said Telecommunications Switching System with Said Application Program from Said Remote Computer"**

Proposed Construction: Plain and ordinary meaning; does not require additional construction.

Here too, Alcatel believes that this phrase of claim 17 needs no additional construction, as there is nothing ambiguous about this claim element. It plainly states that the remote computer uses the application program to access the telecommunications switching system. Indeed, the

Court has been separately asked to construe the component terms "accessing," "telecommunications switching system" and "remote computer" (*see* Sections B.3, B.1, B.2 at pp. 10-14, 6-9, 9-10, respectively), leaving nothing else to construe.

Even Telcordia's construction – "using the application program at the remote computer to directly and independently access the telecommunication switching system through a separate second communication link" – is simply a restatement of the claim terms. Once again, Telcordia is trying to improperly import its "communication link" limitations into the claim – and even further adding the extraneous "directly and independently" limitations. For the same reasons discussed above in Section E.3 (discussed in connection with the claim 17 feature of "accessing a server with said browser," *supra* pages 10-14), Telcordia's efforts to import these claim limitations should also be rejected.

6. "System Manager Building Block"

Proposed Construction: A message passage and handling system.

The term "system manager building block" is found in claim 17, which recites: "communicating with a *system manager building block* of the telecommunications switching system from said remote computer to provide monitoring of the telecommunications switching system" (emphasis added).

Alcatel's proposed construction simply adopts the definition of the term as it is specifically defined and used by the specification. The specification distinctly defines the "System Manager 18 [as] *any type of message passing and handling system*" (Ex. 2, col. 6, ll. 14-16) (emphasis added). No further restriction is warranted or proper. *See Phillips*, 415 F.3d at 1315 ("[T]he specification is always highly relevant to the claim construction analysis. Usually, it is dispositive; it is the single best guide to the meaning of a dispute term."). While other functionality *may* be included in the System Manager, no further functionality is required by the claim.

Alcatel does not quibble with the fact that the System Manager may be implemented in software. Indeed, that much is clear from the specification, which defines a "building block" in a general sense as "one or more software objects and routines. . . ." (Ex. 2, col. 4, ll. 54-56).

Telcordia's construction, however, does not stop at simply stating that the System Manager is implemented in software. In its efforts to be overly inclusive, Telcordia has rendered its proposed construction unwieldy and unhelpful on its face, since it reads as follows:

> Software resident in the telecommunications switching system used to manage the telecommunications switching system, including establishing communications with between the remote computer and the telecommunications switching system.

This wordy construction is not only confusing, but it is also factually wrong. Literally, Telcordia's construction requires the system manager building block to be resident in the telecommunications switching system it is monitoring. But according to the specification, System Manager 18 is a building block of the "*Telecommunications Switch Management System*" which may or may not be part of the "telecommunications switching system" that it is monitoring. Telcordia's construction is thus improper. *See Dayco Prods.*, 258 F.3d at 1324 ("If an argument offered in support of a particular claim construction is so convoluted and artificial that it would not be apparent to a skilled artisan reading the patent and the prosecution history, the argument is simply unhelpful to the performance of our task.").

Quite simply, Alcatel's construction should be accepted by the Court because it attributes to the system manager building block only the functionality that it needs to implement the "communicating" function of the claim and because it is easily understandable by a lay jury.[4]

7. "Communicating With a System Manager Building Block of the Telecommunications Switching System from Said Remote Computer"

Proposed Construction: The remote computer communicates with a message passage and handling system of the telecommunications switching system.

With one critical exception, Alcatel's and Telcordia's constructions of this phrase in claim 17 are essentially alike insofar as they both restate the claim term in everyday language. However,

[4] Indeed, Telcordia's Final Joint Claim Chart supports Alcatel's construction. For example, Telcordia cites to passages that describe messages being sent and received by and from the system manager building block. *See, e.g.*, Ex. 2, col. 8, ll. 32-34 ("Commands and Messages can be sent and received between Remote Computer 10 and System Manager 18").

Telcordia is unsurprisingly consistent in its narrowing efforts by seeking to add the phantom "second communications link" limitation to claim 17 so as to be consistent with the other "link" limitations it seeks to add throughout the remainder of the claim.

However, claim 17 simply does not recite a "second communications link" and Telcordia's construction should be rejected for all the reasons discussed in Section E.3 (discussed in connection with the claim 17 feature of "accessing a server with said browser," *supra* pages 10-14).

8. **"Monitoring"**

Proposed Construction: Plain and ordinary meaning; does not require additional construction.

The term "monitoring" of claim 17 is not a technical term and nowhere in the claims or specification does the patentee manifest any intent to deviate from the ordinary and customary meaning of "monitoring." As such, it is an everyday term which is understood equally well by those of ordinary skill in the art and laypersons alike. Accordingly, Alcatel believes that the term does not require additional construction.

Telcordia's proposed construction – "obtaining performance status information from elements of the telecommunications system" – is at best misleading. Specifically, Telcordia's construction uses the extraneous word "obtaining" which adds an active element to the claim language that is simply not there. *See, e.g.*, WEBSTER'S THIRD NEW INT'L DICTIONARY 1559 (3d ed. 1993) (Ex. 15) (defining "obtaining" as "to take hold of; to gain or attain possession or disposal of usu. by some planned action or method"). However, the term "monitoring" is not constrained to being active as it can also be a passive process:

- "To scrutinize or check systematically with a view to collecting certain specified categories of data; to keep watch over; supervise." AMERICAN HERITAGE DICTIONARY 810 (2d ed. 1982) (Ex. 16) (emphasis added).
- "The process of *observing* a system to verify that its parameters are within prescribed limits." THE IEEE Standard DICTIONARY OF ELECTRICAL AND ELECTRONICS TERMS 665-666 (6th ed. 1996) (Ex. 11) (emphasis added).

There is no reason to needlessly narrow the term "monitoring" to an active role, and therefore Telcordia's proposed construction should be rejected.

9. **"Hypertext Markup Language (HTML) Server"**

Proposed Construction: A server that handles hypertext markup language.

This term is found in dependent claim 19, which reads: "The method of claim 17, wherein the server comprises a hypertext markup language (HTML) server." The parties' dispute centers on whether an HTML server "handles" HTML (Alcatel's construction) or whether it "provides information" in HTML. The difference is subtle, but meaningful. The specification shows that the claimed server may receive, store and transmit information. (Ex. 2, col. 5, ll. 21-27, ll. 54-58; col. 6, ll. 26-32).

Alcatel's proposed construction – "a server that handles hypertext markup language" – includes each of these functions. However, Telcordia's proposed construction – "a server that provides information in hypertext markup language" – is limited to only the transmission of information. Telcordia cannot and does not point to any portion of the specification that supports such a narrow interpretation. This is because the specification only states, for example, that "the remote server can be a Hypertext Markup Language ("HTML") server." (Ex. 2, col. 2, ll. 28-29); "although Remote Server 14 may be any type of server, it may comprise an "HTML" (Hypertext Markup Language) Server, for example. Additionally, Server Page 20 may for example comprise an HTML Page." (Ex. 2, col. 5, l. 66 to col. 6, l. 2).

Alcatel's construction is consistent with both the claim and the specification and should therefore be accepted by the Court.

10. **"Java Applet"**

Proposed Construction: A computer program, which is written in the Java language.

This term is found in dependent claim 24, which reads: "The method of claim 17, wherein said application program is provided to the remote computer in the form of a Java Applet."

The term "Java Applet" as understood by a person of ordinary skill means: a computer program, which is written in the Java language. Alcatel agrees with Telcordia that a Java Applet

may be run in a web browser. However, Alcatel disagrees with Telcordia's construction to the extent it requires the Java Applet to run within a browser. Alcatel's construction reflects this meaning and is supported by the specification, which states: "[t]he remote server then provides a copy of the application program to the remote computer, typically in the form of a Java Applet." (Ex. 2, col. 2, ll. 4-6).

Alcatel also objects to Telcordia's construction because Telcordia tries, yet again, to introduce another unstated limitation into the claim. Telcordia's construction requires the Java Applet to be "invoked by the web-browser." However, Telcordia does not state what it means by the term "invoke."

TELCORDIA'S '633 PATENT

SUMMARY OF ARGUMENT

The Court should adopt Alcatel's proposed constructions of the disputed terms. Alcatel has offered constructions that comport with the ordinary meaning of the terms and are supported by the intrinsic evidence. However, the patent does not set forth adequate disclosures with respect to certain of the disputed terms and Alcatel urges the Court to find the claims that include those terms invalid as indefinite.

III. STATEMENT OF FACTS – BACKGROUND OF TECHNOLOGY

The Lucent Brief sets forth the background of "circuit switched" and "packet switched" networks. *See* Lucent Brief at 1-3.

When digital transmission systems replaced the old analog backbone of the telephone network in the 1960's, there was a desire to maintain the reliability of the old network by implementing a digital "circuit switch" design where "dedicated" connections are maintained between two nodes in a network. These circuit switched telecommunications systems were designed to set up a virtual connection (instead of an actual physical connection) where specific network resources were reserved for a particular call. That way, the "line" was available for the caller's use throughout the duration of the call, just as it was in the old analog systems (where an actual connection was made between the two callers through the classic "switchboard").

One basic property of these circuit switched systems was that once a "connection" was set up between two nodes in the network, all data between the two nodes was delivered at a constant rate. For example, when a voice call was set up between two callers, data representing the conversation (including the "silence" during the call) was transmitted between the callers' phones at a constant rate of 64,000 bits per second. Other "connections" could be set up in these circuit switched networks at different data rates, but they all shared the property that once they were set up the data was exchanged between the two endpoints at a stable and constant rate.

In contrast, in a packet switched network, such as the Internet, the nodes communicate with one another via small packets of data that may be sent to each other via different paths through the network at widely varying data rates. Packet switched networks send data in bursts, potentially severing the nexus between the data and its timing.

For there to be compatibility between networks, circuit switched traffic must be able to travel over a packet switched network. Essentially, a string of 0s and 1s being transmitted at a constant rate is chopped into a number of packets. Because these packets may be transmitted over a network interspersed with thousands of other packets, each packet contains information directing it to the correct recipient. Once these packets arrive at their destination, the address information is stripped off and the 0s and 1s are reassembled into the original circuit switched transmission.

This process – the "packetizing," transmission, and recreation of circuit transmissions – creates a risk that the continuity of time sensitive data, such as a phone call, will be lost. In other words, if voice information is not reproduced at the same rate as it is sent, phone calls will sound garbled or have unnatural delays. Thus, for this process to work, the timing of the source and destination nodes for a communication must be synchronized.

Techniques for this synchronization have been around for more than a decade. These techniques all require that certain information relating to the constant bit rate of the circuit data from the source node be sent over the packet switched network so that the destination node can recreate the exact rate at which the data was generated. In this way, the destination node can effectively recreate the appearance of a circuit switched network between the source and destination nodes even where a packet switched network was actually used to transmit the data. To recreate the source timing at the destination, the system can rely on the network clock as a starting point, since each node has access to this common reference. The source can compare the rate at which it is generating data with this common network clock and send this timing information along with the data. At the destination, the correct rate of the data can be recreated by comparing the timing information to the network clock.

The claimed invention of the '633 patent, Synchronous Residual Time Stamp ("SRTS"), is one technique for synchronizing the source and destination ends of the network so that a circuit-emulated communication can be properly recreated at the destination. (Ex. 17). The '633 patent explains that SRTS is a combination of two existing prior art methods of accomplishing this same goal, Synchronous Frequency Encoding Technique ("SFET") and Time Stamp ("TS"). SRTS was an attempt to combine the advantages of the SFET and TS approaches and to minimize or eliminate their respective disadvantages. (Ex. 17, col. 3, ll. 21-22; col. 3, ll. 34-37).

The SRTS method is based on the observation that the 16-bit timing information traditionally sent with a circuit-emulated communication conveys redundant information. (Ex. 17, col. 3, ll. 40-65). An analogy is instructive. Assume a car's odometer has 16 digits. Today, it reads 1000000000000001, tomorrow it reads 1000000000000005, the day after it reads 1000000000000010, so on and so forth. If a driver had to communicate the mileage of his car daily to his insurance agent, it would be highly inefficient to give his insurance agent the complete mileage each day ("today the mileage is 1000000000000010"). Rather, the driver and agent would understand that the first 12 or so digits of the odometer are not going to change from day to day, and would only have to communicate the last 4 digits of the odometer to know the car's mileage. This is essentially SRTS. Rather than transmit 16 bits of timing information for a circuit switched communication, the first 12 bits of which are always the same, the SRTS technique requires transmission of only 4 bits representing the variance of the clock within a narrow potential window, which it calls the Residual Time Stamp ("RTS"). (Ex. 17, col. 3, ll. 43-46). SRTS employs a number of mathematical operations to reduce the 16 bit count of the total number of clock cycles within a given period to the 4-bits that represent the narrow potential variance of the number of clock cycles within that period (the residual time aka the RTS), and recreate the full 16-bit timing information required to reconstruct the circuit-emulated transmission.

IV. ARGUMENT

A. Alcatel's Proposed Claim Constructions

1. "transmitting . . . an RTS" [claims 1, 5, 11, 33]

Each asserted claim requires "transmitting . . . an RTS." Alcatel's proposed construction is: "the RTS is transmitted in a portion of the overhead other than the convergence sublayer overhead." Telcordia's proposed construction is: "sending an RTS over the network."

When construing a technical term, an understanding of how a person of ordinary skill in the art would "read the claim term... in the context of the entire patent, including the specification" is critical. *Phillips*, 415 F.3d at 1313. The specification's discussion of a technical term usually is "dispositive" and "is the single best guide to the meaning of a disputed term." *Id.* at 1315. That is particularly true when "the specification may reveal an intentional disclaimer, or disavowal, of claim scope by the inventor. In that instance . . . the inventor has dictated the correct claim scope, and the inventor's intention, as expressed in the specification, is regarded as dispositive." *Id.* at 1316.

Here, the '633 patent expressly disclaims using the convergence sublayer to transmit an RTS by criticizing such transmission as "inefficient" and "disadvantageous[]." This limitation, therefore, is properly construed to mean that "the RTS is transmitted in a portion of the overhead other than the convergence sublayer."

The '633 patent reflects a compromise that incorporates the beneficial aspects of two prior art approaches – the Synchronous Frequency Encoding Technique ("SFET") and the Time Stamp ("TS") technique – while avoiding the alleged drawbacks inherent in those schemes. (Ex. 17, col. 3, ll. 34-38). Specifically, the '633 patent explains that the benefit of SFET is its efficient use of bandwidth because the time stamp "is carried in the ATM adaptation layer" rather than the convergence sublayer. (Ex. 17, col. 2, ll. 55-57). The patent emphasizes that in the SFET technique: "*[a]dvantageously . . . a convergence sublayer is not required to transmit* the [time stamp] and only small overhead bandwidth is required to transmit the necessary information." (Ex. 17, col. 3, ll. 25-28) (emphasis added).

By contrast, in describing the TS approach, the patent praises the technique's flexibility but criticizes its inefficient use of bandwidth to transmit the timing signal: "[d]isadvantageously, [] a rigid convergence sublayer structure is required to transmit the TS, which adds complexity and makes inefficient use of the overhead bandwidth." (Ex. 17, col. 3, ll. 32-34). After noting SFET's "advantage" – that it does not use the convergence sublayer to transmit a time stamp – and criticizing the TS technique as inefficient for doing so, the '633 patent makes clear that "[a]n object of the present invention is to achieve synchronous timing recovery with an approach that has the advantages of both the SFET and TS approaches, specifically, the efficiency of SFET and the flexibility of TS." (Ex. 17, col. 3, ll. 35-38) (emphasis added).

In this way, the '633 patent teaches that the RTS must be transmitted in the adaptation layer and *cannot* be transmitted in the convergence sublayer. One of ordinary skill in the art would understand, based on this disclosure, that "the inventor has dictated the correct claim scope," *Phillips*, 415 F.3d at 1316, by expressly representing that their "invention" employed the "efficiency of SFET," and disclaimed the "inefficient" use of the convergence sublayer overhead taught in the TS method.

Presented with such circumstances, the Federal Circuit consistently has held that patentees cannot later expand their claims to cover products that suffer from the very problem that they allegedly solved: "[w]hile it is true that not every advantage of the invention must appear in every claim . . . it would be peculiar for the claims to cover prior art that suffers from precisely the same problems that the specification focuses on solving." *Lizardtech, Inc. v. Earth Resource Mapping, Inc.*, 424 F.3d 1336, 1343-44 (Fed. Cir. 2005) (emphasis added); *see also SciMed Life Sys., Inc. v. Advanced Cardiovascular Sys., Inc.*, 242 F.3d 1337, 1340 (Fed. Cir. 2001) (construing claims to require coaxial lumens because patent emphasized coaxial lumens as a feature of the invention and criticized other types of lumens).

Not only does the '633 patent eschew the use of the convergence sublayer overhead to transmit the RTS because it is "inefficient," but it specifically states that the RTS is transmitted "via the adaptation layer." (Ex. 17, col. 4, ll. 8-9). In the Summary of the Invention, the patentees state

that in the claimed RTS technique, just as in SFET, the timing signal "is transmitted via the adaptation layer," not the convergence sublayer overhead. (Ex. 17, col. 4, ll. 7-9). "Each successive RTS is *incorporated within the ATM adaptation layer* overhead." (Ex. 17, col. 6, ll. 52-53). This is in direct contrast with the "inefficient" TS method which uses the convergence sublayer overhead to transmit a time stamp. (Ex. 17, col. 3, ll. 6-8; col. 3, ll. 32-34). The specification thus confirms that the '633 patent disclaims using the convergence sublayer to transmit an RTS. *See Curtiss-Wright Flow Control Corp. v. Velan, Inc.*, 2006 U.S. APP. LEXIS 3521, at *10 (Fed. Cir. Feb. 15, 2006) (construing the claims in strict accordance with the specification when the "specification describes the deficiencies of the prior art" and "further extols this invention for overcom[ing] these deficiencies in the prior art."); *Astrazeneca AB v. Mutual Pharm. Co.*, 384 F.3d 1333, 1340 (Fed. Cir. 2004) ("Where the general summary or description of the invention describes a feature of the invention . . . and criticizes other products . . . that lack that same feature, this operates as a clear disavowal of these other products.").

Likewise, the '633 patent describes the prior art approach of using the convergence sublayer to transmit a time stamp as "inefficient" and "disadvantageous[]." The '633 then "extols this invention for overcoming these deficiencies in the prior art" by using the adaptation layer to transmit the RTS. Just as in *Curtiss-Wright*, the patentees' description of the invention and the prior art makes clear that the claimed invention covers "transmitting . . . an RTS" in the adaptation layer and disclaims such transmission in the convergence sublayer overhead. Accordingly, Alcatel's proposed construction should be adopted.

2. "transmitting means," "means for transmitting," and "receiving means"

Claims 5 and 11 require a "transmitting means...for transmitting over the telecommunications network an RTS at the end of each RTS period."[5] The parties agree that this is a means-plus-function limitation to be construed under Section 112, ¶6. The parties also agree that

[5] Claim 11 likewise requires a "means for transmitting."

the recited function is "transmitting over the telecommunications network an RTS at the end of each RTS period that is equal to the modulo 2^P count of network clock cycles at that time."

"[S]tructure disclosed in the specification qualifies as 'corresponding' structure only if the specification or prosecution history clearly links or associates that structure to the function recited in the claim." *Default Proof Credit Card Sys., Inc. v. Home Depot U.S.A., Inc.*, 412 F.3d 1291, 1298 (Fed. Cir. 2005). And, the law is well-settled that "structure supporting a means-plus-function claim under § 112, ¶ 6 must appear in the specification. . . . [T]he inquiry asks first whether structure is described in the specification" *Atmel Corp. v. Information Storage Devices, Inc.*, 198 F.3d 1374, 1381 (Fed. Cir. 1999). The "duty to link or associate structure to function is the quid pro quo for the convenience of employing § 112, P6." *Default Proof*, 412 F.3d at 1298.

Here, the '633 patent specification fails to disclose any structure for performing the claimed function, thereby rendering the claims indefinite. Attempting to fill the gap in the patent's disclosure, Telcordia contends that "[t]he corresponding structure is ATM Assembler 17, including a transmission framer circuit required to insert ATM cells into a transmission stream for transmission over network 18 (Fig. 2)." This argument fails for two reasons.

First, of the structure identified by Telcordia, only the ATM assembler is actually described in the specification and, therefore, is the only structure that can be considered in the means-plus-function construction process. *Atmel*, 198 F.3d. at 1381. Critically, the ATM assembler does not perform any transmission functions. Rather, as the specification explains, the ATM assembler only *prepares* a cell for transmission:

> The associated data to be transmitted (not shown) is also processed by processor 16 to form the payload of the cells, which *are then assembled by an ATM assembler 17, which adds an ATM header for transmission over the network 18.*

(Ex. 17, col. 6, ll. 53-57). Because it performs no actual transmission – serving only to prepare the cell for transmission – the ATM assembler cannot serve as corresponding structure to the claimed "transmitting" function.

Second, even if the ATM assembler could theoretically perform the transmitting function, the '633 patent disclosure is insufficient to satisfy the means-plus-function requirements because "the structure must not only perform the claimed function, but the specification must clearly associate the structure with performance of the function." *JVW Enters. V. Interact Accessories, Inc.*, 424 F.3d 1324, 1330 n.1 (Fed. Cir. 2005). There is no meaningful dispute that the ATM assembler itself is insufficient structure, even Telcordia does not contend that the ATM assembler is corresponding structure for this "transmitting" function. Rather, Telcordia contends that the "corresponding structure is ATM Assembler 17, *including a transmission framer circuit required to insert ATM cells into a transmission stream for transmission over network 18* (Fig. 2)." Through sleight of hand, Telcordia attempts to create from whole cloth an additional structure – the so-called "transmission framer circuit" "include[ed]" within the ATM Assembler – to perform the recited function.

The specification, however, never mentions a "transmission framer circuit" let alone describe such a framer circuit as a part of the ATM Assembler or link it to the claimed function. Section 112, ¶ 6 requires that a patentee "disclose[] specific structure(s) corresponding to that means in the patent specification." *Kemco Sales, Inc. v. Control Papers Co.*, 208 F.3d 1352, 1360 (Fed. Cir. 2000). The patentee has not met that obligation here, and Telcordia cannot concoct a new structure – this "transmission framer circuit" – to remedy that failure.

Indeed, the Federal Circuit recently rejected a patent holder's attempt to associate undescribed parts of a structure to a recited function when "none of [the] parts are described in the specification." *Default Proof*, 412 F.3d at 1300. In doing so, the Court made clear that "[w]hile corresponding structure need not include all things necessary to enable the claimed invention to work, it must include *all structure that actually performs the recited function.*" *Id.* at 1298 (emphasis added).

In sum, Telcordia's attempt to manufacture a corresponding structure for the "transmitting" function must be rejected. "If an applicant fails to set forth an adequate disclosure, the applicant has in effect failed to particularly point out and distinctly claim the invention as required by the

second paragraph of section 112." *Default Proof*, 412 F.3d at 1298; *Med. Instrumentation & Diagnostics Corp. v. Elekta AB*, 344 F.3d 1205, 1211 (Fed. Cir. 2003) Because the specification does not disclose adequate structure corresponding to the claimed "transmitting means," claims 5 and 11 are invalid as indefinite.[6]

3. "residual time stamp (RTS)"

Each asserted claim includes a "residual time stamp (RTS)." Alcatel's proposed construction is: "a contiguous p-bit representation of the number of network clock cycles" in claims 1 and 5 and "a contiguous p-bit representation of the *derived* number of network clock cycles" in claims 11 and 33. Telcordia's proposed construction is: "the value of a P-bit counter sampled at the end of an RTS period." The core dispute between the parties is whether the RTS is a contiguous representation or is a value that is not contiguous, as Telcordia proposes. For the reasons set forth below, Alcatel's construction should be adopted.

Although the wording of the parties' constructions is different, there is no dispute that the RTS is a representation of the number of network (or derived network) clock cycles. Telcordia's construction uses different words to capture the same concept: the "value of the P-Bit counter at the end of the RTS period" is the number of network (or derived network) clock cycles.

The parties' dispute is centered on a different issue: must this representation be a single contiguous P-Bit value, or can the p-bits of the RTS be broken up and transmitted one at a time. Telcordia contends – presumably to capture the accused products – that an RTS can be broken up and transmitted one bit at a time. However, the record does not support this interpretation.

The RTS is the kernel of information that allows the receiving end of a network to reconstruct the timing information of a circuit-emulated communication. There is nothing in the

---

[6] The claimed "receiving means" is indefinite for the same reasons. Telcordia asserts that the corresponding structure is "ATM Disassembler 32, including a receiving framer that receives the transmission signal and extracts the ATM cells, and AAL Overhead Processor 33 that extracts the RTS codes (Fig. 3)." The specification discloses ATM Diassembler 32 and AAL Overhead Processor 33, but associates neither one with the function of receiving an RTS. Rather, the patent explains that the disassembler processes cells that have already been received, and passes the information on to an AAL process which further processes the received data. (Ex. 17, col. 7, ll. 36-42). Critically, Telcordia's "receiving framer" is not disclosed anywhere in the specification.

specification that suggests, let alone teaches, that the p-bit RTS be broken up and transmitted one bit at a time. The only portion of the specification cited by Telcordia in support of its construction teaches that "[a]t every T seconds . . . the current count of counter 12, which *is then the P-bit RTS to be transmitted.*" (Ex. 17, col. 6, ll. 45-48). If anything, this language confirms Alcatel's construction: *the P-bit RTS* is transmitted. In fact, the specification goes on to say "[a]s aforedescribed, *this number* represents the residual part of S_n and *is all that is necessary to be transmitted* to recover the source clock at the destination node of the network." (Ex. 17, col. 6, ll. 48-51). Transmitting the four bits separately would not be transmitting "this number." To use the odometer example above, to divide the 4 bits of the RTS as Telcordia suggests is possible, would be akin to the driver placing 4 separate phone calls over the course of the day and providing his insurance agent one digit of the odometer reading on each call--that would not be transmitting the *number* of miles driven. Simply put, Telcordia has not – and cannot – point to *anything* in the specification that suggests that "this number" can be broken up and transmitted as four separate numbers. The court should adopt Alcatel's proposed constructions for "residual time stamp (RTS)."

4. **"2^P counts uniquely and unambiguously represent the range of possible network clock cycles within an RTS period" (claims 1 and 5)**

Claims 1 and 5 require that network clock cycles and derived network clock cycles, respectively, be counted modulo 2^P, where "2^P counts *uniquely and unambiguously* represent the range of possible network clock cycles within an RTS period." For the reasons set forth below, this limitation is not amenable to construction and is thus invalid as indefinite.

The Summary of the Invention of the '633 patent teaches that "[b]y selecting the number of bits, P, so that all 2^P possible different bit patterns *uniquely and unambiguously* represent the range of possible numbers of network clock cycles within the fixed interval that is defined by N service clock cycles, the destination node can recover the service clock from the common network clock and the received RTS." (Ex. 17, col. 3, ll. 59-65). The specification goes on to teach that "[t]he

dividing factor is chosen so that the P-bits available can *unambiguously* represent the number of derived network clock cycles within an RTS period" and that, in a particular example, "the number of bits necessary to *unambiguously* represent the number of derived network clock cycles within the RTS period is substantially less than the number of bits that would be required to represent the absolute number of clock cycles within the same interval." (Ex. 17, col. 6, ll. 28-31; col. 7, ll. 17-22). There is not, however, any discussion of what a *unique* representation of the range of network clock cycles would be – the word "*unique*" appears nowhere in the specification other than the claims and the initial reference in the Summary of the Invention. Simply put, a person of ordinary skill in the art would not understand what it means to choose 2^p counts to *uniquely* represent the range of network clock cycles or how that representation is different from an *unambiguous* representation of that range.

In construing this limitation, the Court is thus left with only two options: either the Court must find that the word "uniquely" is superfluous and should be read out of the claims, or the Court must find that the claim language is not amenable to construction in view of this disclosure. The former interpretation is disfavored. *See Innova/Pure Water, Inc. v. Safari Water Filtration Sys., Inc.*, 381 F.3d 1111, 1119 (Fed. Cir. 2004); *Merck & Co. v. Teva Pharms USA, Inc.*, 395 F.3d 1364, 1372 (Fed. Cir. 2005). The latter is thus, in this case, unavoidable: "The definiteness requirement of § 112, ¶2 'focuses on whether the claims, as interpreted in view of the written description, adequately perform their function of notifying the public of the [scope of the] patentee's right to exclude.'" *Honeywell Int'l, Inc. v. Int'l Trade Comm'n*, 341 F.3d 1332, 1338 (Fed. Cir. 2003) (citation omitted). "If the court determines that a claim is not 'amenable to construction,' then the claim is invalid as indefinite under 35 U.S.C. § 112, P2." *Id.* Indeed, the indefiniteness of the term is underscored by the fact that Telcordia's proposed construction, rather than clarify the term, makes the term less comprehensible. Moreover, Telcordia's proposed construction fails to explain the meanings of, or the difference between *uniquely* and *unambiguously*.

Thus, the Court should find that the limitation "2^p counts *uniquely and unambiguously* represent the range of possible network clock cycles within an RTS period" is not amenable to construction and the claim is thus invalid as indefinite.

5. **"At the end of each RTS period"**

Alcatel proposes a construction of the claim language "transmitting . . . an RTS *at the end of each* RTS *period*" in claims 1 and 5 to mean exactly what it says: an RTS is transmitted at the end of its RTS period. Telcordia, however, construes this term to mean "after the end" of the RTS period.

As the Federal Circuit explained in *Phillips*, "[i]n some cases, the ordinary meaning of claim language as understood by a person of skill in the art may be readily apparent even to lay judges, and claim construction in such cases involves little more than the application of the widely accepted meaning of commonly understood words." *Phillips*, 415 F.3d at 1314. That is precisely the situation here. The word "at" simply means "[w]ithin the interval or span of: at the dinner hour; at a glance." *See* THE AMERICAN HERITAGE DICTIONARY OF THE ENGLISH LANGUAGE 122 (4th ed. 2000) (Ex. 18). Likewise, the word "end" simply means "[t]he point in time when an action, an event, or a phenomenon ceases or is completed; the conclusion: *the end of the day*." (Ex. 19, p. 589) (emphasis added). The end of the day is still part of the day, and not part of the next. *Applying the plain meaning of those words makes clear that to be at the end of an interval is still within that interval. In this case, the "end of the RTS period" still is within the RTS period – not after the period is completed.*

The intrinsic evidence supports this construction. For example, the Abstract explains that *"[a]t the end of every RTS period* formed by N service clock cycles," the RTS is transmitted in the ATM adaptation layer. Thus, the RTS is transmitted "at the end" of that RTS period, just as the claims state. Telcordia asks the Court to construe "at the end of each RTS period" to mean "*after* each RTS period has ended." Telcordia's attempt to rewrite the clear English phrase "at the end" is inconsistent with the governing case law and is unsupported by the intrinsic evidence. Nowhere

does the '633 patent disclose transmitting an RTS after the RTS period has ended. To the contrary, the patent consistently emphasizes that the very "invention" requires transmitting the RTS "at the end" of its RTS period. (Ex. 17, col. 4, ll. 6-9).

"Because the patentee is required to 'define precisely what his invention is,' the [Supreme] Court explained, it is 'unjust to the public, as well as an evasion of the law, to construe it in a manner different from the plain import of its terms.'" *Phillips*, 415 F.3d at 1312 (emphasis added). Indeed, the Federal Circuit repeatedly has stated that "courts do not rewrite claims, instead we give effect to the terms chosen by the patentee." *K-2 Corp. v. Salomon S.A.*, 191 F.3d 1356, 1364 (Fed. Cir. 1999). Telcordia chose to claim a system where transmission occurs at the end of the RTS period and the public is entitled to rely on that choice. Here, the plain import of "*at* the end" is "at the end." Telcordia's invitation that the Court rewrite the claim to mean "*after* the end" should be rejected.

6. "network clock" and "derived network clock"

The asserted claims of the '633 patent require counting two separate types of clocks: – a network clock and a derived network clock. Claims 1 and 5 require counting the *network clock* cycles and claims 11 and 33 require "counting the *derived network clock* cycles." The parties dispute the meanings of the terms "network clock" and "derived network clock." Alcatel construes "network clock" to mean the timing reference that synchronizes the source and destination nodes, and "derived network clock" to mean the clock derived by dividing the network clock by a rational number.[7] By contrast, Telcordia's construction collapses the distinction between the two clocks, essentially making them one and the same.

First, the language of the claims themselves establishes that the "network clock" is a different clock from the "derived network clock." Claims 1 and 5 expressly recite a "network

[7] Once the Court construes "network clock," the construction of "network clock cycles" and "counting the network clock cycles" is straightforward. The term "network clock cycles" means the actual number of cycles of the network clock (not the cycles of the derived network clock), and "counting the network clock cycles" means counting the actual number of cycles from the network clock (not the derived network clock).

clock" while claims 11 and 33 recite both a "network clock" and a "derived network clock." In construing claims, courts "must give each claim term the respect that it is due." *Pause Tech. LLC v. TiVo Inc.*, 419 F.3d 1326, 1334 (Fed. Cir. 2005); *Merck*, 395 F.3d at 1372 ("A claim construction that gives meaning to all the terms of the claim is preferred over one that does not do so."). Telcordia's attempt to define both clocks to be the same eliminates the word "derived" from the claims.

Second, the '633 patent specification defines the "network clock" and "derived network clock" as two separate clocks throughout. For example, the specification expressly defines the network clock: "[t]he basic *network clock*, C, shown at 10, serves as *the reference for timing of all nodes* of the synchronous network being here considered." (Ex. 17, col. 6, ll. 23-25). The specification then defines the derived network clock by stating that "[the network clock] is divided in frequency by a rational factor x by a divider 11 to produce a derived network clock having a frequency fnx." (Ex. 17, col. 6, ll. 23-28). Thus, the derived network clock is a separate clock from the network clock that is "produce[d]" by dividing the network clock by a "rational factor x."

Third, the network clock and derived network clock each serve a separate purpose. The network clock is necessary to synchronize the source and destination nodes. (Ex. 17, col. 1, ll. 40-45). By having a common network clock at both the source node and the destination node, the speed of sending data at the source node and receiving data at the destination node can be tied to the same clock. (Ex. 17, col. 2, ll. 25-45; col. 6, ll. 23-25). In contrast, the derived network clock is used to implement the SRTS functionality. Specifically, the derived network clock drives the components that create the recovered source clock from the RTSs. (Ex. 17, col. 16, ll. 39-51; col. 7, ll. 42-55; col. 8, ll. 42-47). Moreover, the specification explains that separate circuitry is required to create the derived network clock from the network clock. In Figure 2, for example, the patent illustrates a divider 11 that takes as input the network clock 10 and produces a derived network clock:

FIG. 2

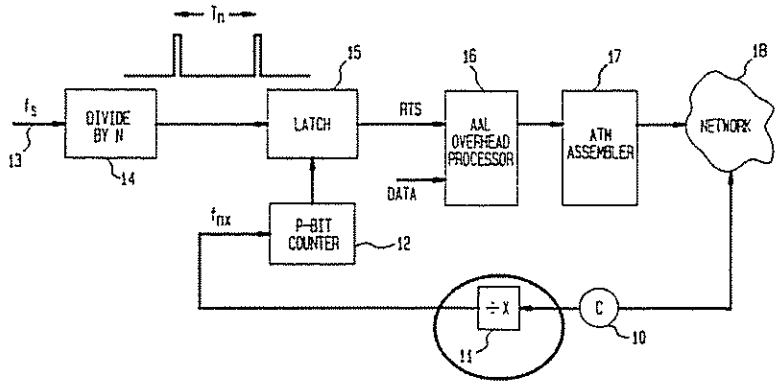

Likewise, at the receiving node, a divider 31 takes as input the network clock 10 and outputs the derived network clock. (Ex. 17, Fig. 3; col. 7, ll. 30-35).

Telcordia attempts to blur the distinction between these two terms, contending that network clock means "the timing reference that synchronizes the SRTS function at the source and destination nodes" and that the derived network clock frequency means "[t]he frequency of the network clock signal f_n expressed as a factor of x (where x may be 1)."[8] Thus, according to Telcordia, the derived network clock is the same as the network clock, and is merely an "express[ion]" of the network clock in terms of a factor "x." This is inconsistent with the claims and the specification and should be rejected.

7. "the period between each pulse" (claim 1) / "the periods between pulses" (claim 5)

The parties agree that the terms "the period between each pulse" and "the periods between pulses" should be given the same meaning in claims 1 and 5 respectively. Alcatel's proposed construction of these terms is "the time interval between two pulses." Telcordia's proposed construction is "the interval between each pair of pulses in the signal produced from the received RTS codes." For the reasons set forth below, Alcatel's proposed construction should be adopted.

---

[8] Tellingly, Telcordia does not offer a construction of "derived network clock." Rather, it construes "derived network clock frequency" and incorporates this construction by reference as its construction of "derived network clock."

As noted above, in some cases, claim construction "involves little more than the application of the widely accepted meaning of commonly understood words." *Phillips*, 415 F.3d at 1314. Alcatel's proposed construction is precisely this widely accepted meaning of commonly understood words: the period between pulses is "the time interval between two pulses." The "period" between two events is commonly understood to be the time interval between those two events. *See, e.g.*, THE AMERICAN HERITAGE DICTIONARY OF THE ENGLISH LANGUAGE 1346 (3d ed. 1992) (Ex. 20) (defining period as "An interval of time characterized by the occurrence of a certain condition, event or phenomenon"). In the same way, the period between pulses is simply the "time interval between two pulses." Here, the specification confirms that the period between pulses should be given its commonly-understood meaning. (Ex. 17, col. 4, ll. 17-21) ("At the destination node, after the AAL is processed, the successive RTSs are converted into a pulse signal which has *periods between pulses* defined by the fixed integral number of derived network clock pulses that correspond to the conveyed RTS periods.").

In contrast, Telcordia argues that the period between pulses should be construed as "the interval between each pair of pulses in the signal produced from the received RTS codes." In offering this construction, Telcordia urges the Court to stray from a commonly understood meaning to adopt an unnecessarily complex construction that is *not* supported by the specification and would *not* be understood by one of ordinary skill in the art. Telcordia's "RTS codes" is unquestionably not a term that a person of ordinary skill in the art would understand absent guidance from the specification. Indeed, the specification of the '633 patent had to define even an "RTS" because that term was not commonly understood in the art. Nor are Telcordia's "RTS codes" or "signal produced from the received RTS codes" described anywhere in the specification or claims of the '633 patent. Indeed, the terms "RTS codes" or even "code" do not appear anywhere in the '633 patent.[9] Despite this, Telcordia urges the Court to ignore the commonly understood meaning of the period between pulses to adopt a construction hinging on these

[9] Interestingly, "RTS codes" *are* described in the subsequent industry standard on which Telcordia has stated it bases its infringement allegations.

undefined and unsupported terms. Telcordia's proposed construction should be rejected, and "the period between pulses" should be given its commonly understood meaning.

8. **"means, at the source node, for defining a derived network clock frequency f_{nx} from a network frequency fn where f_{nx} $=f_n/x$, x is a rational number, and f_{nx} is less than or equal to twice the service clock frequency"**

Claim 11 requires a "means, at the source node, for defining a derived network clock frequency f_{nx} from a network frequency f_n where $f_{nx}=f_{nx}$, x is a rational number, and f_{nx} is less than or equal to twice the service clock frequency." The parties agree that this is a means-plus-function term and that the recited function is "defining a derived network clock frequency f_{nx} from a network frequency f_n." The dispute between the parties is limited to identification of the corresponding structure for performing the claimed function. Specifically, Alcatel identifies the corresponding structure as the "divide by x circuit 11." Telcordia agrees. Telcordia goes on to suggest, however, that the corresponding structure may also be "a direct connection to the network clock when x=1, or a multiplier (PPL) when x is less than 1."[10] This alternative proposed corresponding structure appears nowhere in the '633 patent and would not, in any event, perform the claimed function. This alternative corresponding structure is nothing more than an attempt to broaden the claims to correct two problems with the '633 patent, and presumably capture the accused products. Telcordia's undue expansion of the claims must be rejected.

First, Telcordia would like the Court to construe the structure as being "a direct connection to the network clock when x=1." Telcordia advances this argument to support its contention that the network clock and the derived network clock are in fact the same clock. Telcordia's proposed structure is, however, no structure at all. There is no description of what structure would form this "direct connection." Indeed, the specification does not even describe any embodiments whereby the divide-by-x circuit is removed and a "direct connection" exists. Moreover, there is nothing to suggest that a "direct connection" would perform the recited function, let alone anything in the

[10] Telcordia's construction appears to contemplate the corresponding structure may be any one of these three things: "The corresponding structure is divide by x circuit 11 (Fig. 2), or a direct connection to the network clock when x=1, or a multiplier (PPL) when x is less than 1."

patent that "*clearly links or associates that structure to the function recited in the claim.*" *Default Proof,* 412 F.3d at 1298 (emphasis added).

Second, Telcordia's contention that "a multiplier (PPL) when x is less than 1" is corresponding structure also finds no support in the specification. "[S]tructure supporting a means-plus-function claim under § 112, ¶ 6 *must appear in the specification.*" *Atmel*, 198 F.3d at 1381 (emphasis supplied). The specification nowhere describes, or even mentions, either a "multiplier" or a "PPL." Nor does the specification describe any structure capable of multiplying the network clock.

In this case, the corresponding structure is not ambiguous. The specification describes only a divide by x circuit 11 for performing this function: "[the network clock], having a frequency f_n, is *divided in frequency by a rational factor x by a divider 11* to produce a derived network clock having a frequency f_{nx}." (Ex. 17, col. 6, ll. 25-28). Accordingly, no justification exists for construing the corresponding structure to include "a multiplier (PPL) when x is less than 1."

9. **"counting means" and "converting means"**

The parties agree that the "counting means" and "converting means" limitations are written in means-plus-function format. The parties also agree on the function performed by the "counting means" and "converting means." In particular, the function of the "counting means" is:

> *counting network clock cycles* modulo 2^P, where 2^P is less than the number of network clock cycles within an RTS period and P is chosen so that the 2^P counts uniquely and unambiguously represent the range of possible *network clock cycles* within an RTS period.

Likewise, the function of the "converting means" is:

> converting the received RTSs into a pulse signal in which the periods between pulses are determined from the numbers of *network clock cycles* associated with the counts of *network clock cycles* within said RTS periods.

Both the counting means and the converting means perform functions that depend on the "network clock," but the specification does not describe any structure for performing these functions. Telcordia proposes structures that correspond not to the "network clock," but rather to the "derived network clock." For the Court to find Telcordia's proposed structure to correspond to

the claimed functions in claim 5, the Court would have to read the word "derived" into claim 5. Without this redrafting, there is no corresponding structure in the specification to support the claimed functions. For the reasons set forth below, the Court should reject Telcordia's invitation to read the word "derived" into claim 5, and instead determine that claim 5 is indefinite because the '633 patent describes no corresponding structure to support the "counting means" and "converting means" as actually written.

Telcordia contends that the structure in the specification corresponding to the "counting means" is "P-Bit Counter 12," depicted in Figure 2 of the '633 patent:

FIG. 2

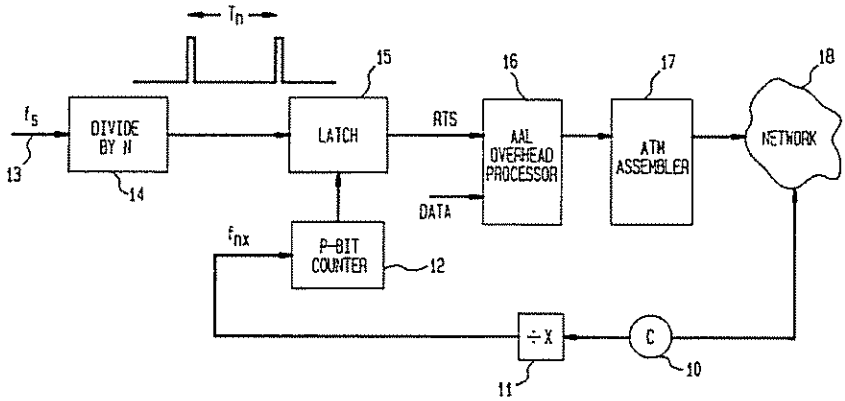

The specification, however, describes the P-Bit Counter 12 as follows: "[t]he *derived network clock*, f_{nx}, drives a P-bit counter, which is continuously counting these *derived network clock pulses*, modulo 2^P." (Ex. 17, col. 6, ll. 39-41). In both Figure 2 and the specification, the patent makes clear that the P-Bit Counter 12 counts *derived* network clock cycles and not the claimed network clock cycles. Thus, rather than clearly link or associate the P-Bit Counter 12 with the claimed function of counting network clock cycles, the specification ties this structure to the different function of counting derived network clock cycles. "In a means-plus-function limitation, court[s] must take great care not to impermissibly limit the function by adopting a function different from that *explicitly recited in the claim*." *JVW Enters.*, 424 F.3d at 1331 (emphasis added).

The "converting means" suffers from the same defect. Telcordia argues that the corresponding structure is "FIFO 34, P-Bit Comparator 35, P-Bit Counter 36 and gating circuitry 37." However, the periods between pulses are not determined from the numbers of network clock cycles, as the claimed function requires, but instead are determined from the numbers of *derived* network clock cycles. (Ex. 17, col. 7, ll. 42-60) ("The earliest received RTS in FIFO 34 is compared by P-bit comparator 35 with the count of a free running P-bit counter 36, driven by the derived network clock. . . ."). Thus, just as with "counting means," to accept Telcordia's identification of corresponding structure for the "converting means" requires the Court to determine that the "network clock" and the "derived network clock" are one and the same. In sum, because the '633 patent does not describe structure for performing the claimed functions of the "counting means" and "converting means," claim 5 is indefinite. *Default Proof*, 412 F.3d at 1298.

10. "means, at the source node, for counting the derived network clock cycles modulo 16 in an RTS period" (claim 11)

The parties agree that this limitation is a means-plus-function limitation pursuant to 35 U.S.C. § 112, ¶ 6. The parties agree that the recited function is "counting the derived network clock cycles modulo 16 in an RTS period." The parties also agree that the corresponding structure for performing this function includes P-Bit Counter 12.[11] The parties dispute, however, whether Latch 15 is also part of the corresponding structure of performing this function. Telcordia contends that Latch 15 is not required for performance of the claimed function. But, as described below, it is.

The '633 patent specification describes that the derived network clock "drives a P-bit counter, which is *continuously counting* these derived network clock pulses, modulo 2^P." (Ex. 17, col. 6, ll. 38-40) (emphasis added). The specification goes on to describe that "*latch 15 samples*

[11] Although Telcordia's proposed construction omits that p must equal 4, there is—and can be—no meaningful dispute that performance of the claimed function requires P-Bit Counter 12 to have a value of p=4. As the specification explains, the P-Bit Counter is "continuously counting these derived network clock pulses, *modulo* 2^p." (Ex. 17, col. 6, ll. 38-41). For the derived network clock cycles to be counted *modulo 16* as the claim requires, they must be counted modulo 2^4 or "modulo 2^p (where p=4)" as Alcatel proposes. *See also* Ex. 17, col. 6, ll. 58-60 (describing use of "four-bit counter (P=4)" to count derived network clock cycles modulo 16).

the current count of counter 12, which is then the P-bit RTS to be transmitted." (Ex. 17, col. 6, ll. 47-49) (emphasis added). Latch 15 samples the count of the p-bit counter "[a]t every T seconds (N source clock cycles)," where N is the "desired RTS period." (Ex. 17, col. 6, ll. 44-48). Put more simply, the p-bit counter is a free-running counter which continuously counts the number of derived network clock pulses, much like a car's odometer, and latch 15 samples the count of that counter every RTS period to transmit the P-bit RTS for that RTS period. It is the combination of p-bit counter 12 and latch 15 which counts the number of derived network clock cycles *in a particular RTS period.*

It is for this reason that Telcordia's proposed corresponding structure, P-Bit Counter 12 alone, is insufficient. Under Telcordia's theory, the p-bit counter would run continuously, and there would be no way to count the number of derived network clock cycles *in a particular RTS period.* Even Telcordia agrees that the claimed function requires something more: it requires "counting the derived network clock cycles modulo 16 *in an RTS period.*" Accordingly, Alcatel's corresponding structure—P-Bit Counter 12 (where p=4) *and* Latch 15—should be adopted.

V. CONCLUSION

For the reasons set forth above, and in the Joint Submission on Claim Construction, the Court should accept Alcatel's proposed claim constructions in all respects and, where appropriate, determine that the claims of the '633 patent containing indefinite terms are invalid under 35 U.S.C. § 112, ¶ 2.

Dated: March 3, 2006

Respectfully submitted:

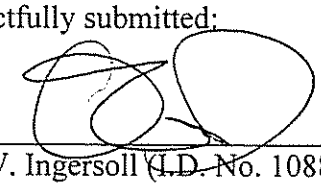

Josy W. Ingersoll (I.D. No. 1088)
Adam W. Poff (I.D. No. 3990)
YOUNG CONAWAY STARGATT & TAYLOR, LLP
The Brandywine Building
1000 West St.
Wilmington, DE 19801
Tel. (302) 571-6672
jingersoll@ycst.com
Attorneys for Defendant / Counterclaim Plaintiff Alcatel USA, Inc.

OF COUNSEL:
Stuart J. Sinder
Michelle Carniaux
Lewis V. Popovski
Mark A. Hannemann
Clement J. Naples
KENYON & KENYON LLP
One Broadway
New York, NY 10004
Tel. (212) 425-7200

CERTIFICATE OF SERVICE

I, Adam W. Poff, Esquire, hereby certify that on March 3, 2006, I caused to be electronically filed a true and correct copy of the foregoing document with the Clerk of the Court using CM/ECF, which will send notification that such filing is available for viewing and downloading to the following counsel of record:

Steven J. Balick, Esquire
Ashby & Geddes
222 Delaware Avenue
Wilmington, DE 19801

I further certify that on March 3, 2006, I caused a copy of the foregoing document to be served by hand delivery on the above-listed counsel of record and on the following non-registered participants in the manner indicated:

BY ELECTRONIC MAIL

Donald R. Dunner, Esquire
Don O. Burley, Esquire
Finnegan, Henderson, Farabow
Garrett & Dunner, L.L.P.
901 New York Avenue, NW
Washington, DC 20001

YOUNG CONAWAY STARGATT & TAYLOR, LLP

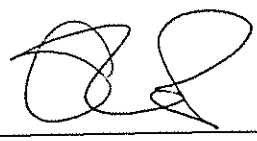

Adam W. Poff (No. 3990)
The Brandywine Building
1000 West Street, 17th Floor
Wilmington, Delaware 19801
(302) 571-6600
apoff@ycst.com

Attorneys for Alcatel USA, Inc.