Comparison of the Bone Filler Patents

- The '054 and '734 disclose systems for filling bone cavities with bone filler material.
- The '054 is a divisional of the '734.
- The '054 and '734 share the same specification and have substantially similar claims.
- The same claim construction and non-infringement analysis should be applied to both the '054 and '734.

Case 1:04-cv-00204-JJF Document 196-18 Filed 04/27/2005 Page 1 of 10

The Claims Must Be Read in View of the Specification

- Claims should be interpreted consistently with the specification because the specification explains the nature of the patentee's invention.[1]
- Claim interpretation should be determined with an understanding of what the inventors actually invented.[2]
- In addition, claims should be interpreted so as to preserve their validity. "[C]laims should be read in a way that avoids ensnaring prior art if it is possible to do so."

1 Medrad, 401 F.3d 1313, 1319 (Fed. Cir. 2005)
2 Renishaw, 158 F.3d 1243, 1250 (Fed. Cir. 1998)
3 Harris, 114 F.3d 1149, 1153 (Fed. Cir. 1997)

Case 1:04-cv-00204-JJF Document 196-18 Filed 04/27/2005 Page 2 of 10

Claims Should be Read to Avoid Ensnaring Prior Art

- If the Bone Filler Patents are read broadly to cover any device that
  - tamps material contacting the inner walls of a hollow tube into bone or
  - tamps material contacting the inner walls of a hollow tube (that is, in turn, inserted into a second hollow tube) into bone
- the Bone Filler Patents would be invalid in light of the prior art.

Case 1:04-cv-00204-JJF Document 196-18 Filed 04/27/2005 Page 3 of 10

Prior art discloses the insertion of a tamping instrument into a hollow tube, so that the tamping instrument clears material contacting the inner walls of a hollow tube into the bone.

See DOT's Appendix, Exs. B-A, B-1 thru B-10.

Case 1:04-cv-00204-JJF Document 196-18 Filed 04/27/2005 Page 4 of 10

Prior Art Discloses a Tamping Instrument Clearing Material From the Inner Walls of an "Inner" Tube (That is Inserted into an "Outer" Tube) into the Bone (e.g. App. Ex. B-4, U.S. Patent No. 4,801,263)

- A delivery device fills the "inner" tube with material

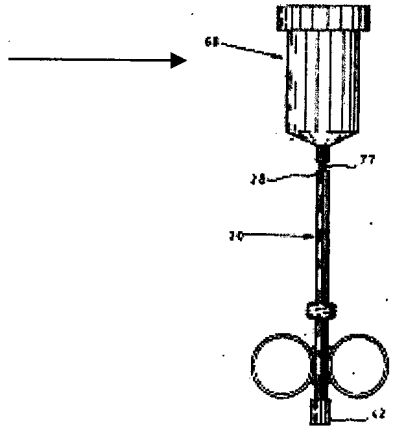

FIG. 9

- The filled "inner" tube is inserted into an "outer" tube

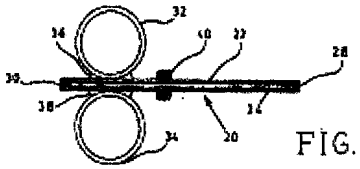

FIG. 2

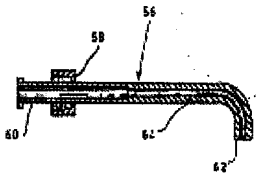

FIG. 6

- A tamping instrument is inserted into and advanced through the "inner" tube

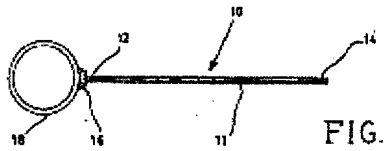

FIG. 1

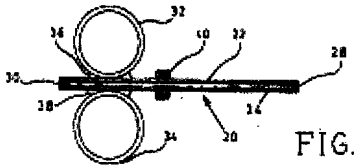

FIG. 2

FIG. 6

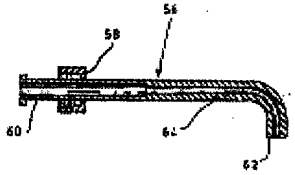

- The tamping instrument clears the material from the inner walls of the "inner" tube into the bone

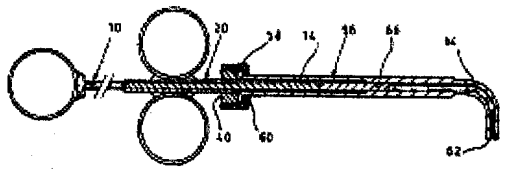

FIG. 7

Case 1:04-cv-00204-JJF Document 196-18 Filed 04/27/2005 Page 5 of 10

The Bone Filler Patents Disclose Five Instruments with Distinct Purposes and Operations

- Delivery Device (e.g. syringe)
- Nozzle Instrument (hollow tube)
- Tamping Instrument
- Cannula (hollow tube)
- Stylet (discussed later)

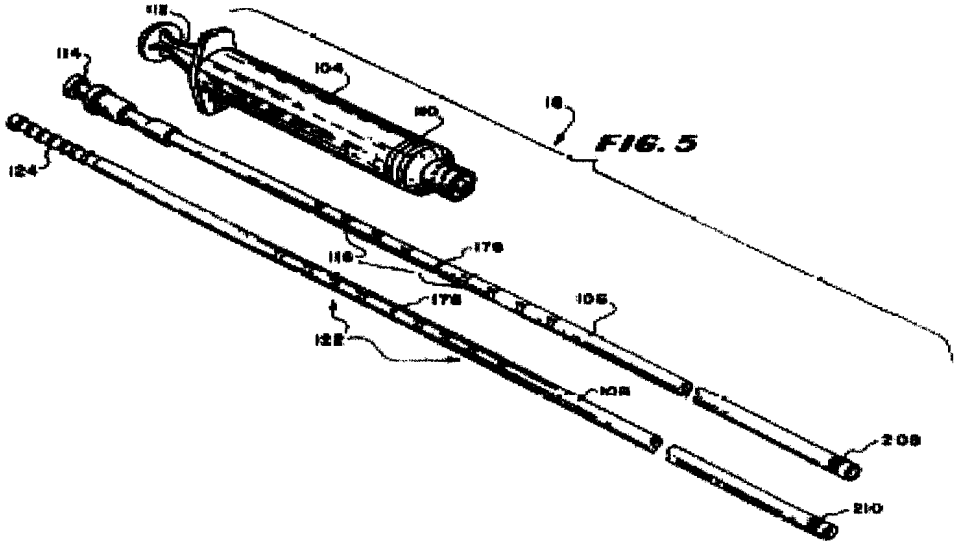

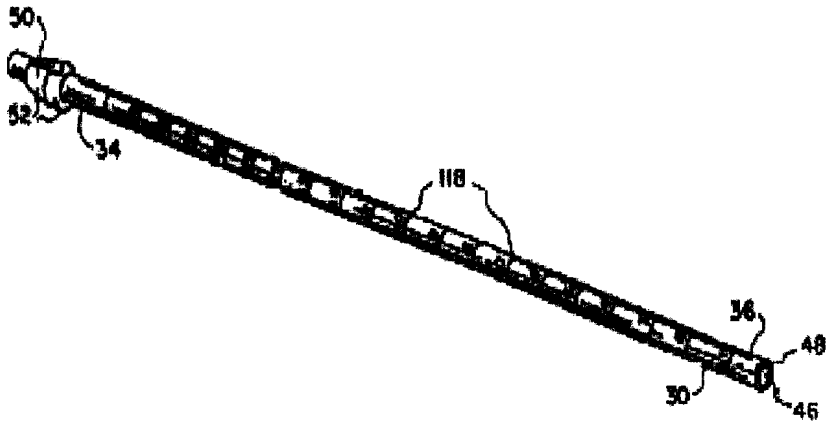

The Delivery Device (e.g. Syringe) is Attached to the Nozzle (a Hollow Tube)

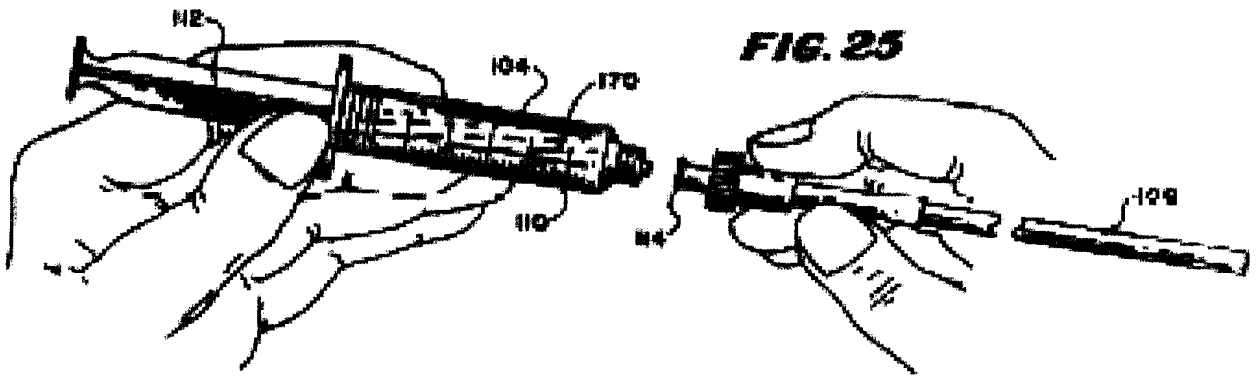

FIG. 25

'734, Col. 16, lines 1-6

Case 1:04-cv-00204-JJF Document 196-18 Filed 04/27/2005 Page 7 of 10

The Nozzle (a Hollow Tube) is Inserted into the Cannula (a Hollow Tube); the Distal End of the Nozzle is Inserted Past the Distal End of the Cannula

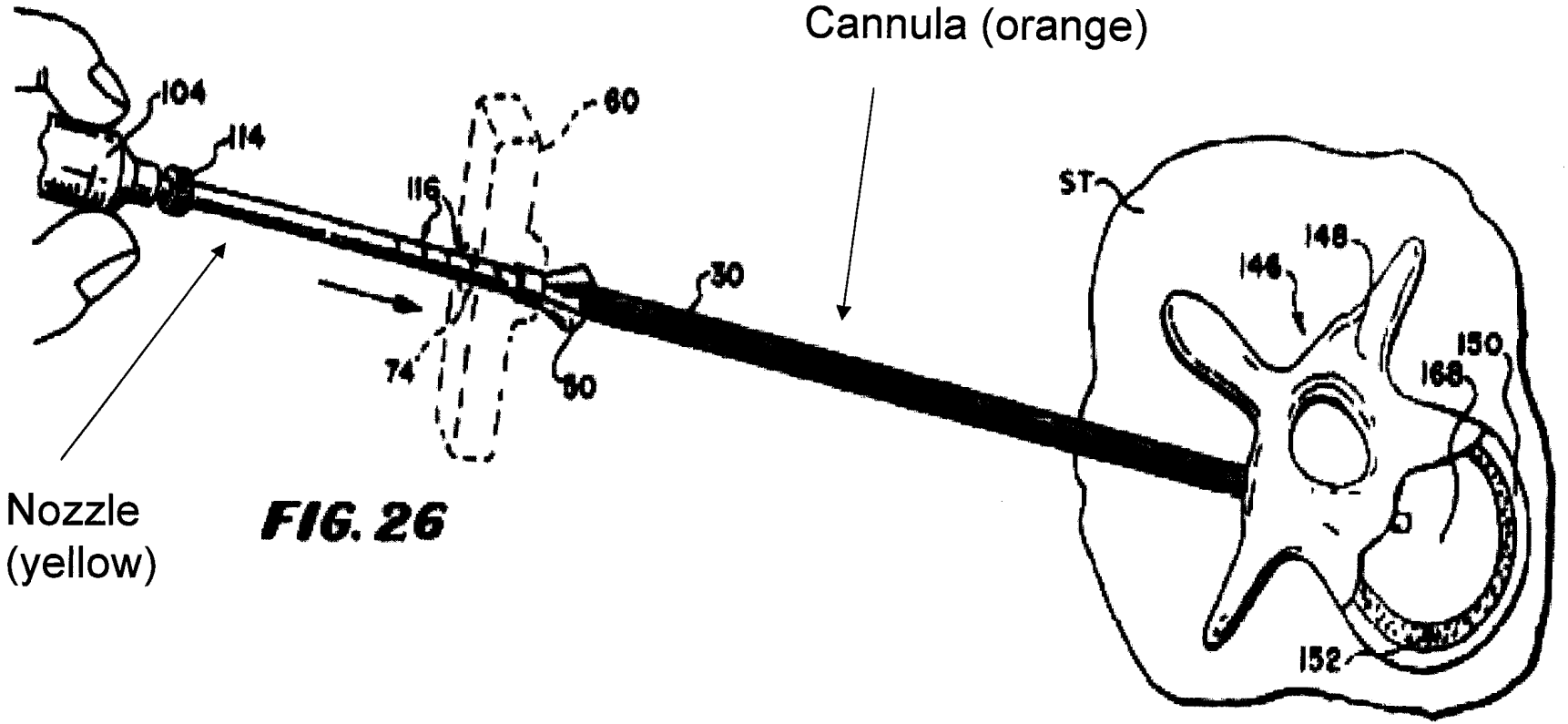

FIG. 26

'734, Col. 11, ll. 3-5; Col. 16, ll. 6-9

Case 1:04-cv-00204-JJF Document 196-18 Filed 04/27/2005 Page 8 of 10

Initially, the Delivery Device (e.g. Syringe) Expels Material into the Nozzle into the Bone Cavity

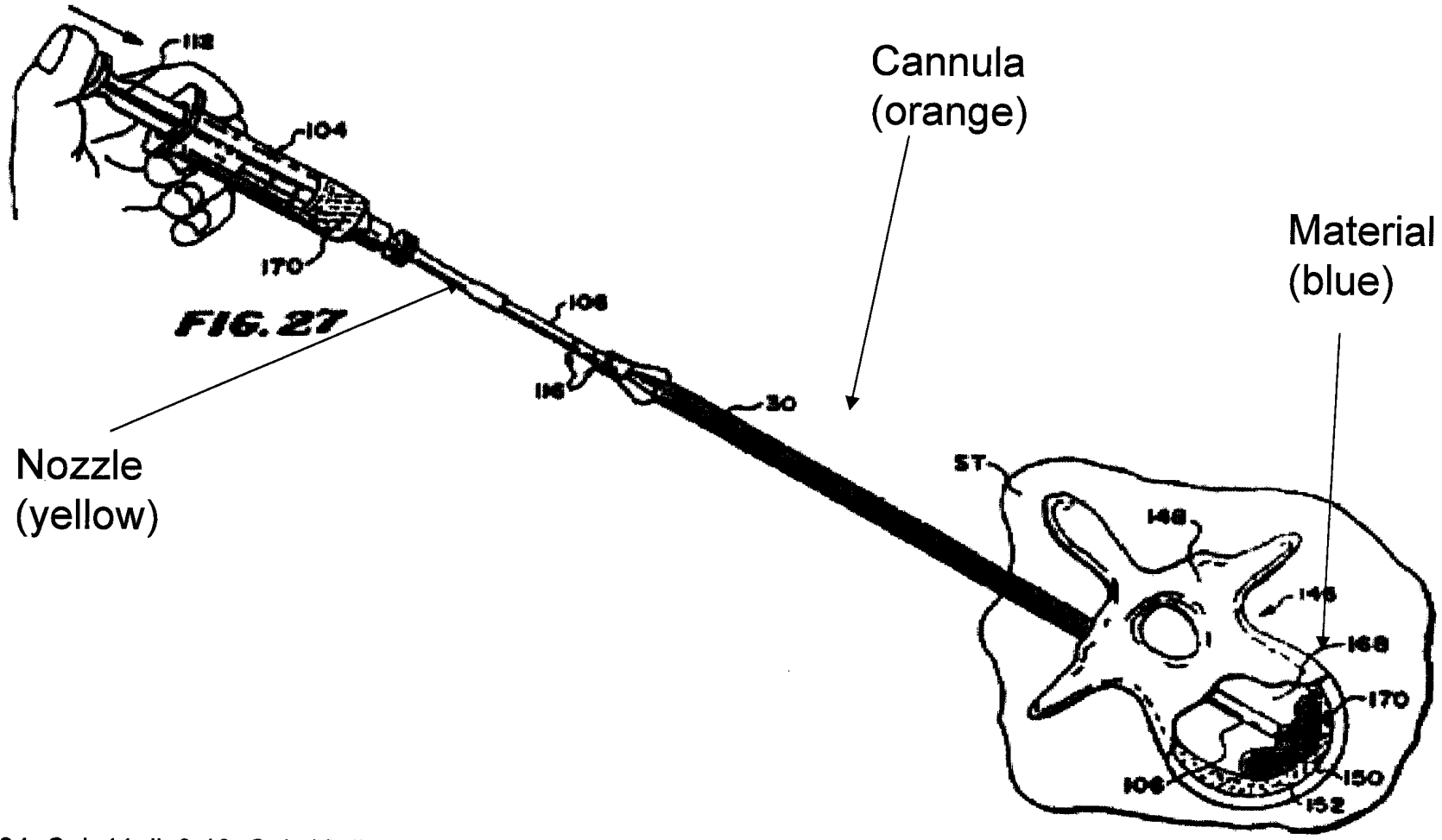

FIG. 27

'734, Col. 11, ll. 9-13; Col. 16, ll. 14-21; Col. 18, ll. 40-42; Col. 16, ll. 30-38

Case 1:04-cv-00204-JJF Document 196-18 Filed 04/27/2005 Page 9 of 10

The Nozzle Instrument is Withdrawn From the Cannula As the Syringe Expels Material

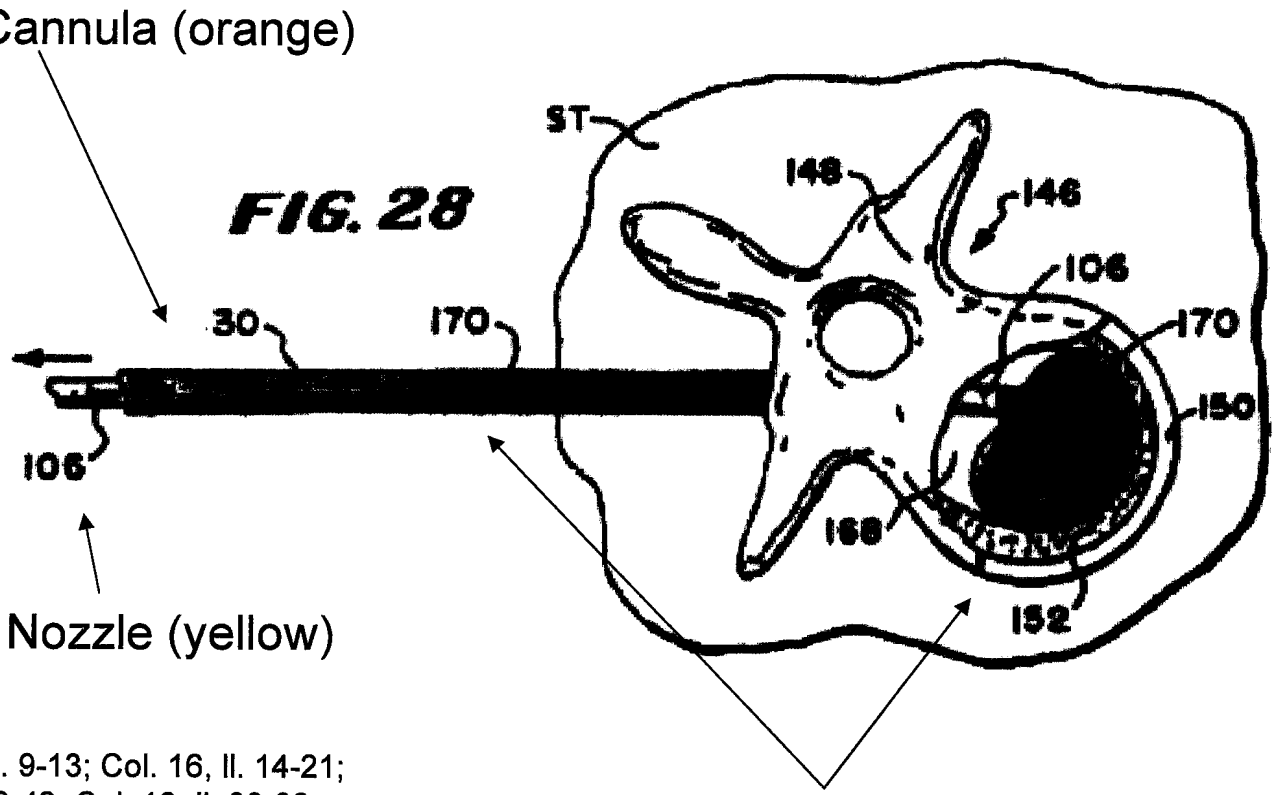

'734, Col. 11, ll. 9-13; Col. 16, ll. 14-21; Col. 18, ll. 40-42; Col. 16, ll. 30-38

The arrow (on the left) indicates the withdrawal of the Nozzle from the Cannula

Case 1:04-cv-00204-JJF Document 196-18 Filed 04/27/2005 Page 10 of 10