IN THE UNITED STATES DISTRICT COURT
FOR THE DISTRICT OF DELAWARE

KYPHON INC. Plaintiff, v. DISC-O-TECH MEDICAL TECHNOLOGIES LTD., and DISC ORTHOPAEDIC TECHNOLOGIES, INC. Defendants.	C.A. 04-204-JJF **PUBLIC VERSION**

DECLARATION OF THOMAS L. HALKOWSKI IN SUPPORT OF KYPHON INC'S OPENING BRIEF REGARDING CONSTRUCTION OF THE DISPUTED CLAIM TERMS FOR THE PATENTS-IN-SUIT

VOLUME 2 OF 2

DATED: April 6, 2005

CERTIFICATE OF SERVICE

I hereby certify that on this 6th day of April 2005, a true and correct copy of the DECLARATION OF THOMAS L. HALKOWSKI IN SUPPORT OF KYPHON INC.'S MOTION FOR A PRELIMINARY INJUNCTION was caused to be served on the attorneys of record at the following addresses as indicated:

VIA HAND DELIVERY
Maryellen Noreika
Morris Nichols Arsht & Tunnell
1201 North Market Street, Suite 2100
P.O. Box 1347
Wilmington, DE 19899-1347

Attorneys for Defendants
Disc-O-Tech Medical Technologies Ltd. and Disc Orthopaedic Technologies, Inc.

VIA FEDERAL EXPRESS
Julie A. Petruzzelli
Eric S. Namrow
Venable LLP
575 7th Street, N.W.
Washington, DC 20004

Attorneys for Defendants
Disc-O-Tech Medical Technologies Ltd. and Disc Orthopaedic Technologies, Inc.

Thomas L. Halkowski

80023869.doc

M

THE ADULT SPINE

PRINCIPLES and PRACTICE

Editor-in-Chief

JOHN W. FRYMOYER

Associate Editors

THOMAS B. DUCKER
NORTIN M. HADLER
JOHN P. KOSTUIK
JAMES N. WEINSTEIN
THOMAS S. WHITECLOUD III

VOLUME ONE

RAVEN PRESS

THE ADULT SPINE

PRINCIPLES and PRACTICE

Volume 1

THE ADULT SPINE

PRINCIPLES and PRACTICE

Volume 1

EDITOR-IN-CHIEF

John W. Frymoyer, M.D.
Professor of Orthopaedics
Director, McClure Musculoskeletal Research Center
Department of Orthopaedics and Rehabilitation
University of Vermont
Burlington, Vermont

ASSOCIATE EDITORS

Thomas B. Ducker, M.D.
Clinical Professor, Division of Neurosurgery
University of Maryland
Associate Professor, Department of Neurosurgery
The Johns Hopkins University
School of Medicine
Baltimore, Maryland

Nortin M. Hadler, M.D.
Professor of Medicine and
Microbiology/Immunology
School of Medicine
University of North Carolina
at Chapel Hill
Chapel Hill, North Carolina

John P. Kostuik, M.D.
Professor of Orthopaedic Surgery
University of Toronto
Director, Spinal Surgery
Director, Biomechanics Laboratory
The Toronto Hospital
Toronto, Ontario

James N. Weinstein, D.O.
Associate Professor
Department of Orthopaedic Surgery
Director
Spine Diagnostic and Treatment Center
University of Iowa Hospital
Iowa City, Iowa

Thomas S. Whitecloud III, M.D.
Professor and Acting Chairman
Department of Orthopaedic Surgery
Tulane University School of Medicine
New Orleans, Louisiana

Raven Press New York

Raven Press, 1185 Avenue of the Americas, New York, New York 10036

© 1991 by Raven Press, Ltd. All rights reserved. This book is protected by copyright. No part of it may be reproduced, stored in a retrieval system, or transmitted, in any form or by any means, electronical, mechanical, photocopying, or recording, or otherwise, without the prior written permission of the publisher.

Made in the United States of America

Library of Congress Cataloging-in-Publication Data

The Adult spine: principles and practice/editor-in-chief, John W. Frymoyer; associate editors, Thomas B. Ducker . . . [et al.].
p. cm.
Includes bibliographical references.
Includes indexes.
ISBN 0-88167-689-6 (set)
1. Spine—Abnormalities. 2. Spine—Wounds and injuries. 3. Spine—Diseases—Treatment. 4. Spine—Surgery. I. Frymoyer, John W. II. Ducker, Thomas B., 1937–
[DNLM: 1. Spinal Diseases. 2. Spine. WE 725 A244]
RD768.A32 1991
617.5'6—dc20
DNLM/DLC
for Library of Congress 90-9101
CIP

The material contained in this volume was submitted as previously unpublished material, except in the instances in which credit has been given to the source from which some of the illustrative material was derived.

Great care has been taken to maintain the accuracy of the information contained in the volume. However, neither Raven Press nor the editors can be held responsible for errors or for any consequences arising from the use of the information contained herein.

Materials appearing in this book prepared by individuals as part of their official duties as U.S. Government employees are not covered by the above-mentioned copyright.

9 8 7 6 5 4 3 2 1

479,481) (Fig. 34). In the evaluation of syringomyelia and hydromyelia, it is possible to quickly determine the extent of the cystic cavity and to evaluate the adjacent spinal structures determining whether spinal malformations are present (88). The sequencing parameters of an MRI examination are important to prevent syrinx-like artifacts (truncation errors) (50,81,241) and may also be helpful in investigating fluid dynamics in cystic lesions (118). Extradural cysts most often occur in the lower thoracic spine and may compress the adjacent spinal cord or nerve roots (154). MRI has been successful in delineating the extent of each of these cystic processes (154,335,411) and in determining the degree of neural compression.

In the evaluation of spinal dysraphism, MRI has quickly become the initial screening examination for evaluating the spinal cord, position of the conus medullaris, morphology of the filum terminale, and for identifying associated lipomatous traction lesions (16,86,305, 352,483) (Fig. 35). Coronal and sagittal T1-weighted images are frequently obtained for a rapid screening exam, but additional multiplanar sequences are necessary for a more complete evaluation of a dysraphic myelopathy (16). Axial T1- and T2-weighted images are needed to diagnose focal syringohydromyelia and myelomalacic abnormalities located near the conus. These abnormalities have been identified in some patients with a tethered cord (352). Axial T2-weighted images are also frequently needed to distinguish between diastematomyelia and small hydromyelic cavities (86). Imaging of pulstatile cord motion may also be clinically useful when evaluating diseases restricting cord motion or changing the status of parenchymal compliance (242).

VERTEBRAL BODY MARROW DISORDERS

The basic microstructure of bone marrow consists of a trabecular bone framework surrounding fat cells, hematopoietic cells, reticulum cells, nerves, and vascular sinusoids. MR imaging of marrow depends upon the chemical components of the two types of marrow: red marrow which contains approximately 40% water, 40% fat, and 20% protein, and yellow marrow which contains approximately 15% water, 80% fat, and 5% protein (470). T1-weighted sequences optimize the signal from fat (99,354) and provide excellent anatomic detail. Any pathologic process which replaces fat in the marrow can be delineated by decreased signal intensity of the marrow on a T1-weighted image, but T2-weighted sequences are needed to characterize the abnormal tissue. A pathologic process with increased free water or unbound intracellular water will demonstrate hyperintensity on T2-weighted images compared to the normal fatty marrow. In addition to the standard T1- and T2-weighted sequences recommended for the evaluation of vertebral marrow (417), inversion recovery, gradient echo (403), and chemical shift imaging (367,489) are being utilized in the evaluation of marrow disorders.

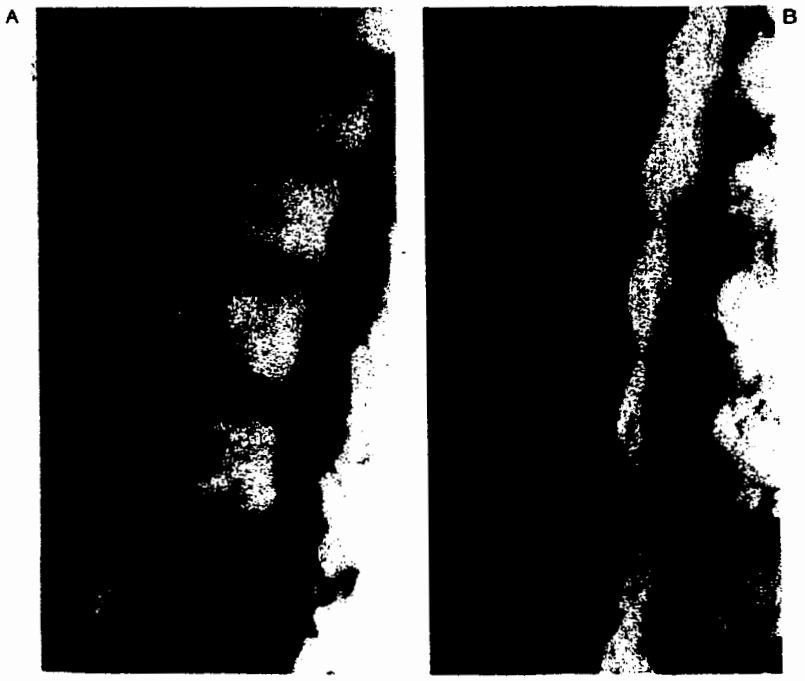

FIG. 36. Benign and malignant vertebral compression fractures. On the sagittal T1-weighted image (A), there is a benign compression fracture of the T12 vertebral body. Except for a small hemispheric region of decreased signal intensity in the superior segment of T12 (black arrow), the signal intensity in the cancellous bone of T12 is isointense with respect to the normal L1 vertebral body marrow. There is a malignant compression fracture of the L4 vertebral body (white arrow), and in contrast to the T12 vertebra the marrow signal intensity of L4 is diffusely hypointense with respect to the normal marrow. On the sagittal T2-weighted image (B), the normal vertebral marrow fat has become less intense compared to its appearance on the T1-weighted image. The metastatic process involving the L4 vertebra (black arrow) has become slightly hyperintense compared to the normal vertebral bodies making it difficult to delineate the abnormal cancellous bone on the T2-weighted image compared to the T1-weighted image. The signal intensity of the T12 vertebra (white arrow) remains isointense with the normal vertebrae.

N

US005192282A

United States Patent [19]

Draenert

[11] Patent Number: 5,192,282

[45] Date of Patent: Mar. 9, 1993

[54] SUCTION DRAINAGE-BONE SCREW

[76] Inventor: Klaus Draenert, Gabriel-Max-Str. 3, DE-8000 München 90, Fed. Rep. of Germany

[21] Appl. No.: 756,835

[22] Filed: Sep. 9, 1991

Related U.S. Application Data

[62] Division of Ser. No. 541,099, Jun. 20, 1990, Pat. No. 5,047,030.

[30] Foreign Application Priority Data

Feb. 20, 1987 [DE] Fed. Rep. of Germany 3705541

[51] Int. Cl.[5] A61B 17/56; A61F 2/32

[52] U.S. Cl. 606/65; 606/92

[58] Field of Search 606/65, 72, 73, 92, 606/93, 94, 60, 62, 64, 68, 77, 80, 104

[56] References Cited

U.S. PATENT DOCUMENTS

2,242,003	5/1941	Lorenzo	606/73
2,243,717	5/1941	De G. Moreira	128/92
2,248,054	7/1941	Becker	145/52
2,267,925	12/1941	Johnston	606/73
2,532,296	12/1950	Giesen	606/73
2,570,465	10/1951	Lundholm	128/92
2,614,559	10/1952	Livingston	128/92
2,631,584	3/1953	Purificato	128/92
3,103,926	9/1963	Cochran et al.	128/92
3,554,193	1/1971	Konstantinou	606/65
3,892,232	7/1975	Neufeld	606/73
4,175,555	11/1979	Herbert	606/73
4,356,572	11/1982	Guillemin et al.	3/1.9
4,463,753	8/1984	Gustilo	606/73
4,494,535	1/1985	Haig	606/92
4,537,185	8/1985	Stednitz	606/73
4,622,959	11/1986	Marcus	128/92
4,653,487	3/1987	Maale	606/94
4,653,489	3/1987	Tronzo	606/93
4,858,603	8/1989	Clemow et al.	128/92

FOREIGN PATENT DOCUMENTS

0172130	6/1985	European Pat. Off. .
2015346	9/1979	United Kingdom .
2157777A	2/1985	United Kingdom .

Primary Examiner—Michael A. Brown
Attorney, Agent, or Firm—Kinney & Lange

[57] ABSTRACT

The invention relates to a bone screw (10) which can be anchored in the bone in a firm and vacuum-tight manner, and to the use of the same in arthroplastic surgery and as a drug delivery system. The interior of the bone screw (10) has a continous longitudinal bore (15) through which the medullary canal can be evacuated during the application of bone cement. The use of the bone screw renders it possible to fill the spongiosa honeycombs with bone cement without endangering the life of the patient.

5 Claims, 2 Drawing Sheets

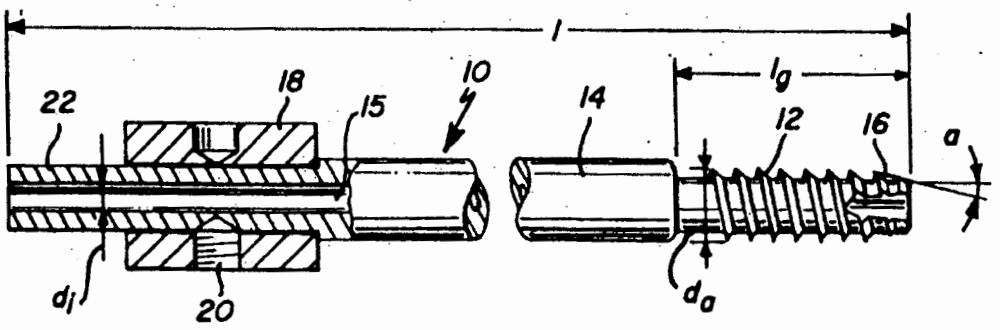

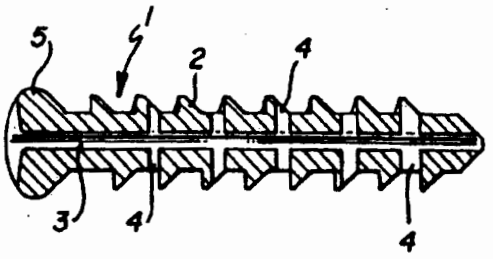

Fig. 1

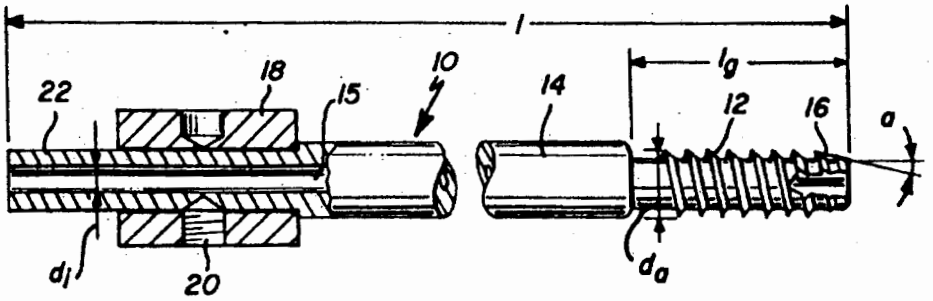

Fig. 2a

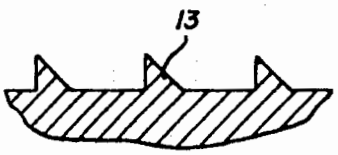

Fig. 2b

Fig. 3

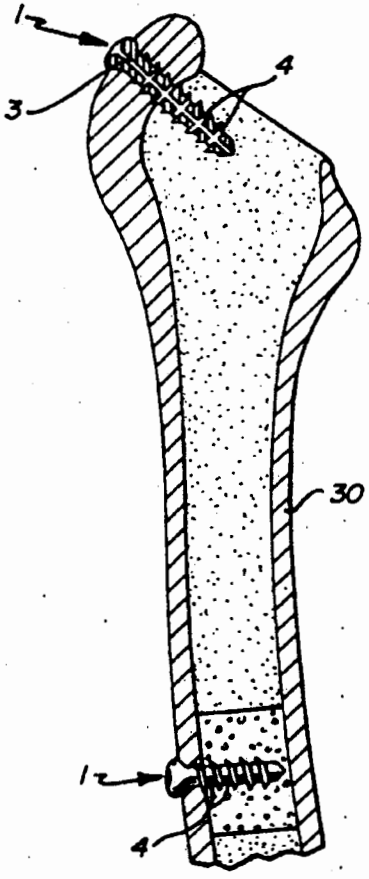

Fig. 4

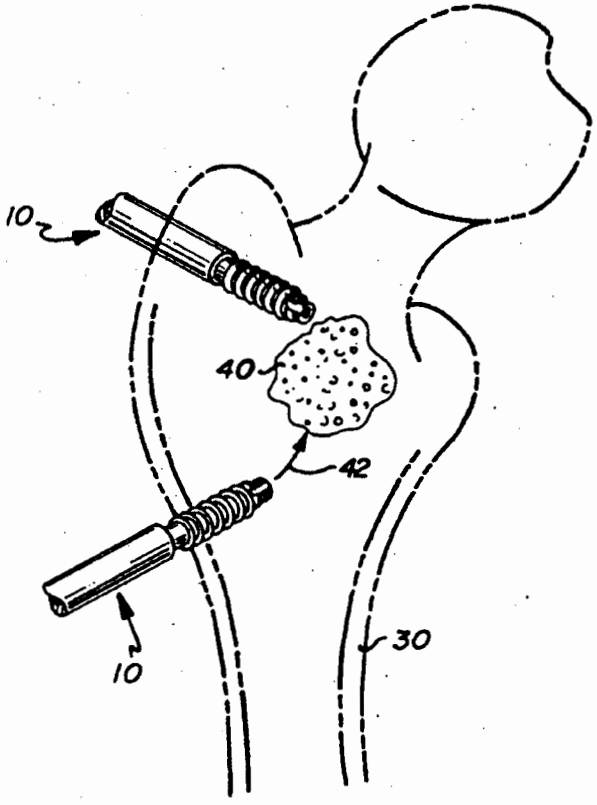

Fig. 5

SUCTION DRAINAGE-BONE SCREW

This is a division of application Ser. No. 07/541,099, filed Jun. 20, 1990, now U.S. Pat. No. 5,047,030.

BACKGROUND OF THE INVENTION

1. Field of the Invention The invention relates to a bone screw which can be anchored in the bone in a firm and vacuum-tight manner, and to the use of the same in a method of applying bone cement and as a drug delivery system.

2. Description of the Prior Art

In arthroplastic surgery, most implants are inserted in the bony bed using so-called bone cement. This bone cement is usually made of polymethylmethacrylate or related compounds. However, the bone cement can only penetrate into the honeycombs of the bone marrow if they are clean and free of fat marrow and cell components.

In the prior art one therefore attempted to wash the bony bed and apply the bone cement under pressure. This technique, also called the "bone lavage and high-pressurizing technique", was usually used when applying bone cement of a low viscosity.

This technique, however, led to a number of incidents which ended fatally. Studies on animals and clinical examinations both showed that an increase in intramedullary pressure can lead to reflex cardiac arrest and that it is also possible for fatal fat and bone marrow emboli to occur. Furthermore, this method did not succeed in keeping the bony bed free of blood. On the contrary, depending on the blood pressure, the blood flowed into the bony bed and mingled with the bone cement, thus greatly impairing its qualities; this happened every time the intramedullary pressure (IMP) dropped below the blood pressure level.

Attempts have also been made to improve the bone cement used in clinics via mechanical stabilization and prepressurization. This improvement can only be completely successful in the technique of cementing if the achieved material stabilization in the bone cement can be transferred to the bony bed of the patient without endangering his life.

SUMMARY OF THE INVENTION

It is the primary object of the invention to provide a method of applying bone cement in which said bone cement is applied deeply and in an artefact-free manner around the prosthesis without endangering the life of the patient.

It is another object of the invention to provide a bone screw which can be firmly anchored in the bone and allows drainage of the medullary canal whilst the bone cement is being applied.

It is a further object of the invention to provide a bone screw which can be used as a drug delivery system.

The invention provides a method for draining the floor and/or roof of the anchorage bed which renders the bed free of blood. As known from the ASIF (Association for Studying Internal Fixation), conventional bone screws, the thread of which has been adapted to the individual load transmission, can achieve a tight sealing of the bone canal. This can be achieved with both pre-cut threads and tapping screws. The bone screw of the invention has an axially continuous longitudinal canal or bore in its interior and is adapted to receive a vacuum line in the appropriate manner in the vicinity of the screw head. Thus it is possible to suck the blood and fat out of the bone canal and the area around it through the longitudinal canal of the bone screw.

The invention also provides a bone screw which can be anchored in the bone in a firm and vacuum-tight manner and has a continuous longitudinal canal in its interior.

According to the invention, said bone screw is used for sucking blood, fat or bone marrow out of the bone canal and the area around it, especially when working with bone cement in arthroplastic surgery. The bone screw of the invention can also be used as a "drug delivery system", the active agent preferably being an antibiotic in a carrier substance or a cytostatic drug. Using two cannulated screws, one for drainage and one for perfusion, it is possible to perform a drug perfusion technique, for example to locally treat a metastasis in the bone.

The bone screw of the invention renders it possible to fill the bone canal with bone cement under vacuum. It is absolutely imperative to fill in the spongiosa with bone cement in the areas in which it is under load in order to reinforce the framework against deformation. The distal draining and drying of the bony bed and the method of sucking the bone cement deep into the femur allows complete and artefact-free filling of the cement around the prosthesis. Once the medullary canal has been filled in, the proximal metaphysal spongiosa is drained separately. Due to its morphology, the spongiosa has to be opened up from the interior via drilling canals so that the spongiosa honeycombs can be filled with cement up to the level of the compact substance and thus almost completely reinforced against deformation. The bone marrow is prevented from being sucked off through the suction syringe of the bone screw by a cortico-spongious plug which acts as a filter. The plug is removed and distally displaced when the medullary canal is opened. By using the bone screw of the invention with its longitudinal canal, it is possible to fill in the proximal spongiosa honeycombs via opening canals and under moderate pressure and complete relief of pressure by means of the applied vacuum. In this case, the absolute pressure applied to the medullary canal is, for instance, 100 to 150 mbar.

Via the vacuum which builds up during draining, the bone cement is sucked deep down into the bone canals and contains no air bubbles. The result is that the obtained bone bed is made of highly compact material.

The bone screw of the invention preferably exhibits one or several transverse canals, preferably two to nine, more preferably four to six, which contact the longitudinal canal, preferably extend in the approximate radial direction of the screw and open up to the outside. This leads to a further increase in the effect of the partial vacuum, especially if the diameter of the partial canals decreases the greater their distance from the tip of the screw.

The thread of the screw is preferably a tapping screw. In the region of the first three thread turns, the screw extends conically towards its tip. The first three turns are designed as thread cutters with chip-removal canals and cut the thread in the bone. This leads to a particularly tight sealing of the bone.

The dimension of the bone screw varies according to its use. When used as a cannulated bone screw in the greater trochanter and the medullary canal of the femur, in particular for applying a vacuum to such a bone

cement in the bone, the screw preferably has an outer diameter of about 5 to 6.5 mm, more preferably 5.8 mm, a core hole diameter of about 4 to 5 mm, more preferably 4.5 mm, a thread length of 15 to 25 mm, more preferably 20 mm, and a pitch (lead) of 1.5 to 2.5 mm, more preferably 2 mm. The thread is preferably a breech block thread or a saw-tooth thread, the saw teeth of the thread being inclined towards the longitudinal axis at an angle of preferably about 45°. The diameter of the inner longitudinal canal or bore is about 2.5 to 3.5 mm, preferably 3 mm.

When the cannulated bone screw is used in infusion, transfusion and perfusion techniques, the diameter of the inner longitudinal canal or bore is preferably about 1 to 3 mm, more preferably between about 1.5 and 2.5 mm. Accordingly, the other dimensions of the screw can be smaller than when the screw is used for applying a vacuum to suck bone cement into the bone.

When the cannulated bone screw is used as a drug delivery system, the diameter of the inner longitudinal canal or bore is preferably about 6 to 10 mm, more preferably about 8 mm. In this technique, the drug preferably exhibits a cylindrical shape, and its diameter is adapted to the diameter of the inner longitudinal canal of the screw with the result that the drug can be pushed through the canal from the outside to the inside where it is applied.

The screw preferably exhibits a tubular piece with a length of about 150 to 250 mm, preferably about 200 mm, attached to the thread portion, through which piece the inner longitudinal canal of the screw extends. A removable handle with which the bone screw can be screwed into the bone is attached to the rear end of the tubular piece by a spring and a set screw. Furthermore, this site also exhibits a connection piece for a vacuum tube which leads to a sterilisable pump.

The screw is preferably made of an extremely pure surgical steel, such as V4A steel, or of titanium or a titanium alloy.

If the bone screw is to remain in the body, at least part of it, preferably the whole screw, should be made of an absorbable material. This material is preferably a plastic material or a completely resorbable material. Such materials are, for instance, described in EP-A-86 90 0132. Examples of such materials are polylactide, polyglycolide or another polyamino acid. The material can be made of a composite of an absorbable matrix and a filler, the filler preferably being a sintered hydroxylapatite or tricalciumphosphate or a finely dispersed Ca-phosphate compound.

When used as a drug delivery system, a plug located at the outer side is preferably used to hermetically seal the longitudinal canal of the screw once the drug has been inserted.

In order to reduce its weight, the handle is preferably made of Al or an Al alloy.

BRIEF DESCRIPTION OF THE DRAWINGS

The following drawings and examples illustrate the invention in greater detail.

FIG. 1 is a cross section of a first embodiment of the bone screw of the invention;

FIG. 2 is a partially cut second embodiment of the bone screw of the invention;

FIG. 3 is the arrangement of a bone screw of the invention for draining the medullary canal of the femur;

FIG. 4 is the arrangement of two bone screws of the invention in the greater trochanter and the medullary canal of the femur; and

FIG. 5 shows a perspective view of the arrangement of two bone screws of the invention used for perfusion purposes.

DETAILED DESCRIPTION OF THE PREFERRED EMBODIMENTS

FIG. 1 is a first simple embodiment of a bone screw 1 of the invention. The screw 1 has an external thread 2 which is designed as a breach block thread, the foremost edge of the saw teeth being inclined towards the longitudinal axis of the screw at an angle of about 45°. The interior of the screw 1 has a continuous longitudinal canal 3 along with several radially extending transverse canals 4 which contact the longitudinal canal 3. It is possible to appropriately connect a vacuum pump via a tube in the area around the screw head 5. In order to be able to apply the vacuum in a uniform manner, the diameter of the transverse canals increases the greater their distance from the head 5 of the screw where the vacuum pump is connected.

The bone screw 10 according to FIG. 2A has a thread portion 12 at its front and a tubular piece 14. The total length 1 is about 120 mm, the length l_G about 20 mm. The external diameter d_a of the threads is about 5.8 mm, whereas the core diameter is about 4.5 mm. Through the complete length of the bone screw 10 extends a continuous inner longitudinal canal 15, the diameter d_f of which is about 3 mm. The tip of the thread is designed as a thread cutter. For this purpose, the tip 16 of the thread portion 12 tapers at an angle α of about 5° to 10°, preferably about 7°, and the first three thread turns of the thread portion are designed as cutters. Furthermore, chip-removal canals are provided. A sleeve 18 with a groove 20 is provided at the rear end of the tubular portion 14. A handle (not shown) is mounted onto the sleeve 18, which handle is secured via a spring with a set screw which engages with the groove 20. Furthermore, a connection piece 22 for a vacuum tube (not shown) is provided at the rear end of the bone screw 10, which tube leads to an evacuatable pump. FIG. 2B shows an enlarged section of the thread portion 12, wherein the threads 13 are designed as saw teeth. The edges of the teeth are inclined at an angle of approximately 45° and 87°, respectively, with regard to the screw axis.

FIG. 3 shows the arrangement of a bone screw 10 of the invention for draining the medullary canal of the femur. This technique will be explained in greater detail in the examples. FIG. 3 shows the handle 24 at the rear end of the screw, through which handle the screw 10 is to be turned. The vacuum tube 26 which leads to the pump is mounted on the connection piece 22 at the rear end of the screw 10. FIG. 3 also shows that the screw 10 is inserted into a cortico-spongious plug 28 in the femur 30 below a prosthesis 32.

FIG. 4 is a systematic illustration of a cannulated bone screw 1' inserted for the distal draining of the medullary canal of the femur 30 and a proximally inserted cannulated bone screw 1 in the greater trochanter. This technique, too, will be explained in greater detail in the examples. FIG. 4 shows a cross section of the proximal bone screw 1 and a side view of the distal bone screw 1' inserted into a cortico-spongious plug 28.

The following examples illustrate the invention.

EXAMPLE 1

In order to demonstrate the manner in which the femur is drained, an experiment is carried out in which the corroded, soft tissue-free femur and its canal system are welded into a film in such a manner that the area surrounding the femur can be evacuated. The femur is then filled with dye, followed by periostally applying a vacuum in the film and noting the time it takes for the dye to pass out of the medullary canal and into a collecting vessel via a tube. It was shown that within three seconds the dye is sucked out of the medullary canal only through the canal systems located along the linea aspera. For the rest of the experiment it suffices to seal the metaphysial region of the femur and the linea aspera with a transparent varnish in order to achieve a high vacuum in the medullary canal. A cannulated bone screw is then anterolaterally inserted into the femur 2 cm beneath the site which corresponds to the tip of the implanted metal prosthesis. The process of evacuation is carried out via the longitudinal canal of the bone screw with the result that a vacuum with an absolute pressure of about 100 to 150 mbar builds up. The femur is then proximally sealed with silicone rubber and the bone cement applied from the proximal direction to the distal direction. This is followed by the insertion of a plastic replica of a Müller standard prosthesis, a damp compress being used to prevent the bone cement from being proximally pressed out. In a second experiment, drainage is carried out in several femora both distally and proximally at the same time. In this case, the proximal, cannulated bone screw is laterally inserted at the greater trochanter in the direction of the lesser trochanter. Evacuation is carried out with the same intensity in both screws. The filling and insertion of the prosthesis is carried out in the same way.

The results of these experiments show that the distal application of vacuum leads to a "water-tight" bone cement filling from the region of the shaft up to the transition of the metaphysis. However, in the region in which deep penetration of the bone cement into the spongiosa framework is aimed at, the bone cement does not penetrate further into the spongiosa framework than it would have done as a result of the pressure exerted by the prosthesis alone without the application of a vacuum.

In the last experimental arrangement with the vacuum in the proximal metaphysis, when the bone cement has been applied, a shunt formation appears in the form of an air canal along the shaft of the prosthesis between the proximal and distal vacuum. The greater suction power is found to be on the distal side. This leads to the conclusion that the proximal, cannulated screw has a substantially smaller suction effect on the medullary canal than the distal screw which extends directly into the medullary canal.

EXAMPLE 2

In an experimental arrangement, the decrease in vacuum in the proximal metaphysis is measured after a vacuum has been distally applied to the medullary canal. Seven surface drilling holes are drilled at each the lesser trochanter, the calcar femoris and the trochanter along the dorsal, medial, foremost and lateral circumference. Measuring probes are pushed through these holes in steps of 5 mm in the direction of the medullary canal. These measurements are carried out independently at all three levels. Once the measurements have been carried out, the drilling holes are refilled with a plastic material.

These measurements yield interesting and surprising findings. They are extremely informative as regards the application of cement under high pressure, but can be explained by the development and growth pattern of the bone.

The proximal metaphysis is characterised by the fact that starting from the medullary canal, the vacuum decreases rapidly up to the metaphysial compacta to a value around atmospheric pressure, i.e. the medullary spaces of the spongiosa are not drained in the direction of the medullary canal, but in the direction of the periosteum.

The effect of the high vacuum on the coronary circulation is examined in animal experiments. To begin with, a vacuum of 100 mbar absolute pressure is applied via an opening canal in the patellar groove of one animal via a cannulated bone screw which has been inserted in a vacuum-tight manner in the bone. The respiratory rate and pulse rate are monitored. The connections between the honeycombs of the medullary space become more and more narrow towards the medullary canal, and broader and broader towards the periosteum. The measurements show a typical increase in pressure from the medullary canal towards the compacta.

EXAMPLE 3

In order to examine the cementing technique in the proximal methaphysis of the femur, in a further series of experiments several femora are opened up from the medullary canal by drilling three medial and three medio-dorsal holes with a 6 mm drill. This is followed by inserting a cannulated bone screw into the greater trochanter, which screw extends towards the lesser trochanter. As in the above examples, a cannulated bone screw is anterolaterally inserted into the cortical bone 2 cm distal of the tip of the prosthesis. The distal screw is placed into a cortico-spongious plug to ensure that the distal and proximal medullary canal remain delimited from the screw by means of a spongiosa filter. A synthetic or manufactured filter or plug may be used instead of the cortico-spongious plug. The bone is filled with Palacos R® bone cement mixed under vacuum. Prior to application, the bone cement and the mixing vessels are cooled to 1° C. The temperature of the mixture when applied to the femur is between 18° and 22° C. The femur is proximally sealed with silicone rubber. After having been precompressed or prepressurized, the bone cement is applied to the femur at the beginning of the fourth minute of the mixing phase. The bone cement is sucked deep down into the femur by the vacuum applied via the distal, cannulated bone screw. Once the prosthesis component has been inserted, the distal vacuum lead is pinched off and the vacuum proximally applied. The silicone rubber prevents the bone cement from being pressed out. The vacuum remains effective in the metaphysis until the bone cement has hardened.

The preparations are sawed open. They reveal that the distal segments of the medullary canal of the proximal half of the femur are completely filled with bone cement and that the peripheral spongiosa honeycombs are totally reinforced by bone cement. Proximally the cement has advanced to the calcar femoris, laterally it has penetrated approximately 4 to 5 mm into the framework of the cancellous bone.

The comparison between filling from the proximal to the distal direction and filling from the distal to the

proximal direction using a nozzle shows that only with distal suction and proximal application of the bone cement can the spongiosa honeycombs be filled and the mingling in of blood be avoided. In the other methods of application, liquid is pushed along the interface from the distal to the proximal direction, and very often, depending on the viscosity of the bone cement, the liquid will be pushed into the cement mass thus causing lamination and the formation of haematocysts. This, in turn, greatly decreases the stability of the bone cement.

EXAMPLE 4

The effect of high vacuum on the coronary circulation is examined in animal experiments. To begin with, a vacuum of 100 mbar absolute pressure is applied via an opening canal in the patellar groove of one animal via a cannulated bone screw which has been inserted in a vacuum-tight manner in the bone. The respiratory rate and pulse frequency are monitored.

It can be seen that no blood is sucked out of the canals once a small amount of the content of the medullary space has been sucked off. The respiratory rate and pulse frequency remain completely unchanged.

EXAMPLE 5

Further experiments show that centripetal application via the cannulated bone screw can be used in the treatment of bone affections. It is shown that over a certain period of time, active agents in a matrix located in the canals of the screw can achieve extremely high concentrations at the site of application. As the bone screw seals the bone in a hermetic manner, the active substance cannot be retrogradely lost. Furthermore, precise insertion of the screw is possible. The bone screw of the invention can thus also be used as a "drug delivery system".

EXAMPLE 6

The bone screw of the invention can also be used in a highly effective local treatment applied, for instance, in osteomyelitis and bone tumors. The first cannulated screw is used to apply a drug at high concentrations directly in or next to the site of focal disease, and the second cannulated screw is used to suck off the perfusion liquid in the vicinity of the focal disease in order to avoid penetration of the drug into the circulation.

FIG. 5 shows a perspective view of such an arrangement. In FIG. 5, two cannulated screws 10 are arranged closely above and below a metastasis 40 in the femur 30. The two screws 10 are preferably inserted in different directions, preferably at an angle of 90° to 180° with respect to one another. The perfusion liquid or drug is applied via the lower bone screw and is sucked through the longitudinal canal of the upper bone screw which is connected to a vacuum line (not shown). The arrow 42 shows the flow of the perfusion liquid. Such a perfusion can be applied for several days. In order to facilitate its insertion, the tip of the bone screw of the invention can additonally comprise a self-cutting drill.

What is claimed is:

1. A method of establishing therapeutic communication with the interior of a bone, the method comprising:

providing at least one bone screw, each bone screw having a first end and a second end and a continuous bore establishing a communication canal between the first and second ends;

inserting at least the first end of each bone screw into the bone such that each bone screw is firmly anchored in the bone in an essentially vacuum-tight manner; and

delivering substances to or from the interior of the bone through the communication canal of each bone screw.

2. The method of claim 1 wherein the step of delivering substances includes the step of removing blood, fat and bone marrow from the interior of the bone through the communication canal of a first bone screw by suction drainage.

3. The method of claim 1 wherein the step of delivering substances includes the step of sucking gas from the interior of the bone through the communication canal of a first bone screw thereby creating a partial vacuum within the bone to thereby suck bone cement into the bone during application of the bone cement.

4. The method of claim 1 wherein the step of delivering substances includes the step of delivering drugs into the interior of the bone through the communication canal of at least one bone screw thereby creating a drug delivery system.

5. The method of claim 1 wherein the step of delivering substances includes the step of delivering drug concentrations in the form of a perfusion liquid into the interior of the bone through the communication canal of a first bone screw at or near the site of a disease for locally treating the disease and the step of draining the perfusion liquid from the interior of the bone through the communication canal of a second bone screw.

* * * * *

United States Patent [19]

Kranz et al.

[11] **Patent Number: 4,981,481**

[45] **Date of Patent: Jan. 1, 1991**

[54] **MARROW NAIL FOR THE TREATMENT OF BONE FRACTURES ACCORDING TO THE MARROW CAVITY NAILING PROCEDURE AND MARROW NAIL TOOL**

[75] Inventors: **Curt Kranz**, Berlin; **Uve Sievers**, Ludwigshafen, both of Fed. Rep. of Germany

[73] Assignee: **Mecron Medizinische Produkte GmbH**, Berlin, Fed. Rep. of Germany

[21] Appl. No.: **254,180**

[22] Filed: **Oct. 6, 1988**

[30] **Foreign Application Priority Data**

Oct. 6, 1987 [DE] Fed. Rep. of Germany 3734111

[51] **Int. Cl.**[5] **A61F 5/04**

[52] **U.S. Cl.** **606/62**

[58] **Field of Search** 623/16, 18, 20, 23; 606/62, 63

[56] **References Cited**

U.S. PATENT DOCUMENTS

3,893,196	7/1975	Hochman	606/62
3,977,398	8/1976	Burstein	606/62
4,446,857	5/1984	Otte et al.	606/62

FOREIGN PATENT DOCUMENTS

913228	6/1954	Fed. Rep. of Germany	606/62
2527460	1/1977	Fed. Rep. of Germany	606/62
3146065	5/1983	Fed. Rep. of Germany	606/62
1034730	8/1983	U.S.S.R.	606/62

Primary Examiner—David J. Isabella
Attorney, Agent, or Firm—Spencer & Frank

[57] **ABSTRACT**

A marrow nail for the treatment of bone fractures, including a marrow nail body having a hollow tubular cross section, the marrow nail body having a constricted marrow nail head, and a marrow nail tool for driving in, extracting and changing the position of the marrow nail during repositioning of a constricted marrow nail head. The marrow nail tool includes two generally parallel gripper jaws which are pivotable relative to one another, each of the two gripper jaws having a respective distal end which extends toward the other one respective distal end, a generally rectangular mandrel disposed between the two gripper jaws, and a securing ring which can be moved into a position encircling the two gripper jaws.

14 Claims, 4 Drawing Sheets

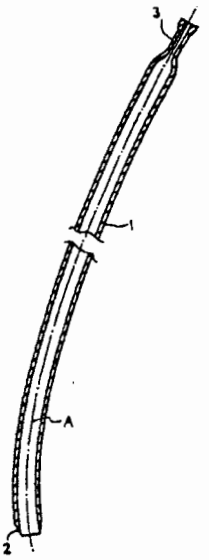

FIG. 1

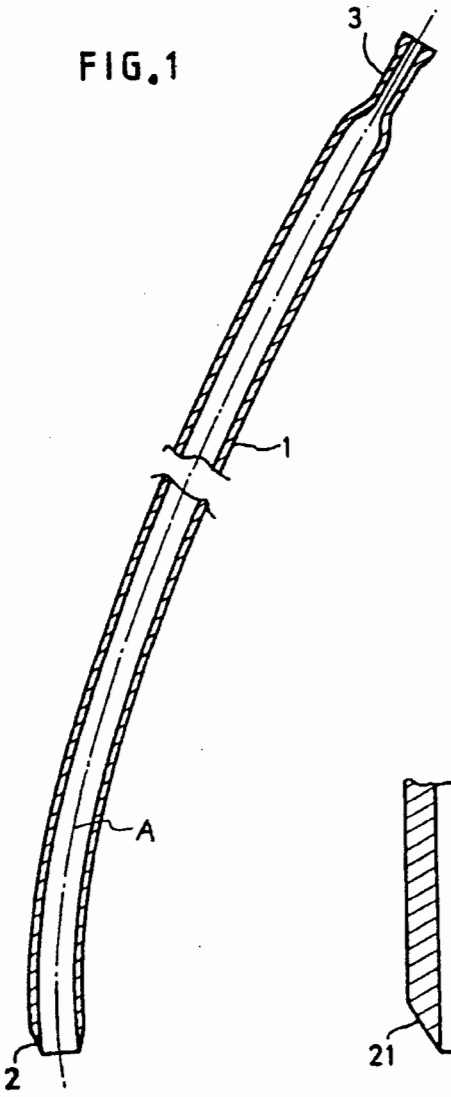

FIG. 2

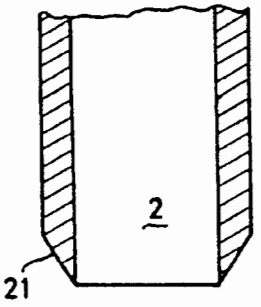

FIG. 3

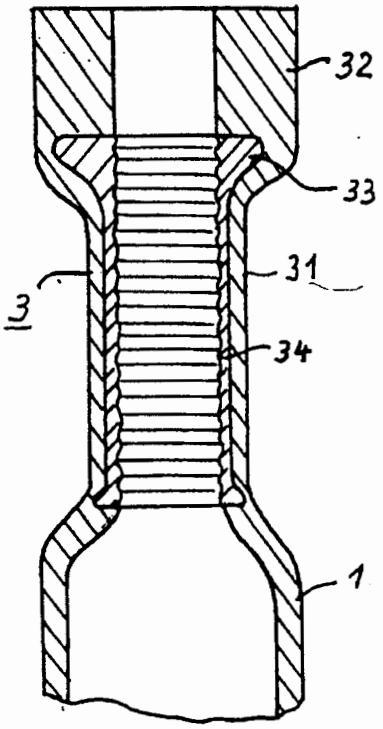

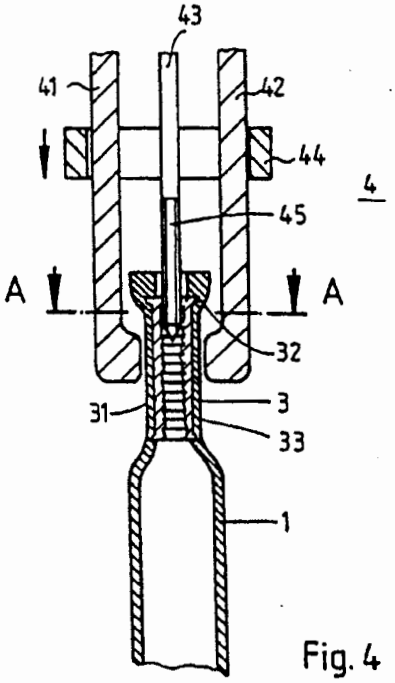

Fig. 4

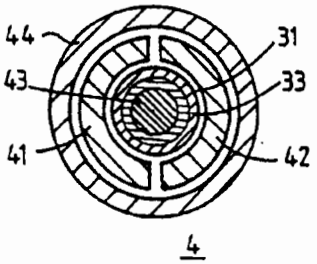

Fig. 5

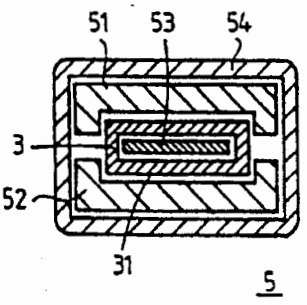

Fig. 6

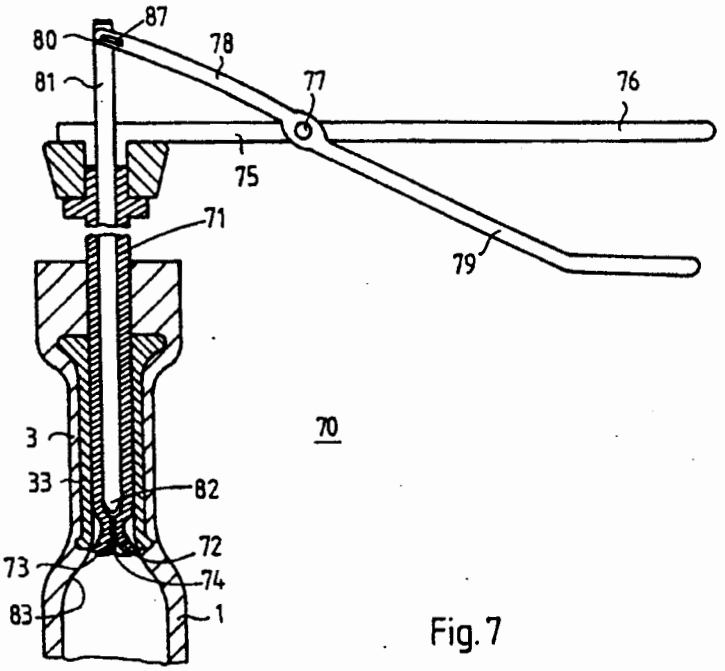
87
80
78
81
77
76
75
71
79
70
3
33
82
72
73
74
83
1

Fig. 7

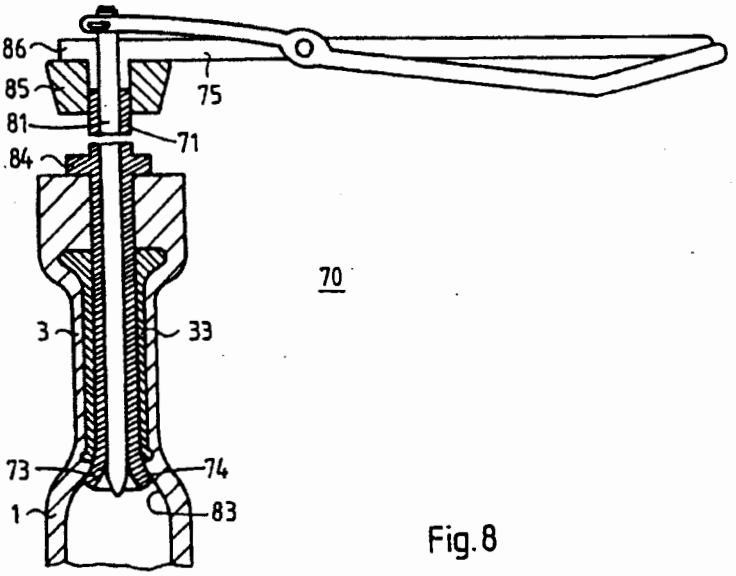
86
85
75
81
71
84
70
3
33
73
74
1
83

Fig. 8

MARROW NAIL FOR THE TREATMENT OF BONE FRACTURES ACCORDING TO THE MARROW CAVITY NAILING PROCEDURE AND MARROW NAIL TOOL

CROSS REFERENCE TO RELATED APPLICATIONS

The subject matter of this application is related to that contained in copending U.S. Pat. application No. 07/254086 to Uve Sievers, entitled "MARROW NAIL FOR THE TREATMENT OF BONE FRACTURES", filed concurrently with the present application.

BACKGROUND OF THE INVENTION

The present invention relates to a marrow nail for the treatment of bone fractures according to a marrow cavity nailing procedure.

For example, the publication entitled "Die Bündel-Nagelung" [Bundle Nailing]published by Springer-Verlag, Berlin, Göttingen, Heidelberg, 1961, pages 3–26 and 56–58, discloses the procedure of marrow nailing and bundle nailing and describes various cross-sectional configurations of the marrow nails employed in this procedure. In addition to lack of bending and rotational stability of the prior art marrow nails, reference is made, in particular, to the numerous difficulties occurring when the marrow nails are removed after the fracture has healed and which, inter alia, lead to joint injuries and infections and frequently require the nail to be chiseled out.

The foregoing considerations apply as well for the use of so-called spring nails whose head ends are bent for future removal of the spring nail, are brought out of the location where they are driven in and must be gripped by a tool in the region of the respective bent head end for manipulation or removal of the spring nail. Due to these bent ends, however, such manipulation of the spring nails may cause movement of the bone which has been stabilized by the spring nail, which may then lead to injury to the bone at the point where the nails are driven in.

SUMMARY OF THE INVENTION

It is an object of the present invention to provide a marrow nail which exhibits high bending strength, rotational stability, low material fatigue, and which is relatively easily driven into bone marrow, so as to provide excellent stabilization of bone fragments, and wherein the marrow nail can be removed without difficulty and without substantial damage to the bone in which the marrow nail is disposed.

The above and other objects are accomplished according to the invention by the provision of a marrow nail for the treatment of bone fractures which includes a marrow nail body having a hollow tubular cross section, the marrow nail body having a constricted marrow nail head, and a marrow nail tool for driving in, extracting and changing the position of the marrow nail during repositioning of the constricted marrow nail head. The marrow nail tool includes two generally parallel gripper jaws which are pivotable relative to one another, each of the two gripper jaws having a respective distal end, each distal end extending toward the other respective distal end, a mandrel disposed between

the two gripper jaws, and a securing ring which can be moved into a position encircling the two gripper jaws.

The invention also relates to a device for locally introducing force to nails which are composed of a plastic material without reducing the advantageous characteristics of the marrow nail or of an implant which is mounted by the marrow nail.

Particularly for nails made of a plastic material which is essentially adapted to be compatible with bone material, there exists the drawback that there is a relatively low limit to the magnitude of local forces introduced to the marrow nail during the driving-in of, and during the extraction of, the marrow nail. Those marrow nails which are composed only of plastic material tend to split or chip off, as does the natural bone material adjacent such a marrow nail which is composed only of plastic material.

In the present invention, the local introduction of force can be effected in an advantageous manner by means of a tool having a mandrel, the mandrel being insertable into the marrow nail to a depth corresponding to that of the position of the distal ends of the gripper jaws which grip and guide the marrow nail on both sides thereof, so that the material composing the marrow nail performs merely the function of a filler material in a sandwich-like composite (which includes the gripper jaws, the material composing the marrow nail, and the mandrel). Due to a constriction in the region of the head of the marrow nail, where the forces are introduced, the cross section of the entire arrangement including the jaws of the tool is not enlarged or is only insignificantly enlarged, in spite of the attached tool so that the freedom of movement remains during the introduction or extraction of the marrow nail.

An advantageous embodiment of the nail according to the present invention includes a thickened portion disposed at the end of the marrow nail head. This thickened portion is followed by a constricted portion which can be gripped by a tool, thereby making possible a secure grip for the extraction of the marrow nail even if only a slight transverse surface pressure can be exerted on the wall of the marrow nail head itself.

In an advantageous modification of the invention, the marrow nail has a cross section which is generally annular and which has generally circular inner and outer perimeters. The marrow nail has an end distal from the marrow nail head, this distal end having a tip which has a sharply ground, annular cutting edge.

In an advantageous embodiment, the marrow nail is composed of a tube formed of knit carbon fibers embedded in a hardenable synthetic resin. The tube may contain carbon fibers which are arranged so as to have crisscross interconnections, and the hardenable synthetic resin may be composed of a biocompatible TEEC matrix material in which the carbon fibers are embedded and which preferably hardens at a relatively high temperature of 380° C. The shape of the marrow nail head and of the distal end of the marrow nail according to the invention can be readily produced during fabrication of such fiber reinforced plastic nails, as discussed hereunder.

In a further advantageous embodiment, the marrow nail is bent in the shape of a C or J. In addition, the marrow nail can be provided with a metal force introduction element which is inserted, before hardening of the hardenable synthetic resin, into the marrow nail head. The metal force introduction element can be composed, for example, of a hollow cylinder whose interior

wall has a rough surface. This element is preferably completely surrounded by the knit fiber fabric, before hardening of the hardenable synthetic resin, so that the metal force introduction element is secured to the marrow nail body in the region of the constricted portion. Since the metal force introduction element is relatively closely disposed to the marrow nail head, it interferes only slightly with the favorable body-compatible characteristics of the nail. If the nail is worked on in the body by means of bone working tools, as may be necessary during subsequent surgical procedures, during insertion of the marrow nail, and during connection thereof with a further prosthesis, the tapered distal end having a sharpened tip permits attachment to and removal of an additional element such as the further prosthesis. This further prosthesis can easily be removed as a whole without performing work on the metal force introduction element itself, so that only the pure plastic body remains in the bone marrow. In this event, another endoprosthesis component can then be connected to the marrow nail.

An advantageous embodiment of a marrow nail tool, for driving in, extracting and changing the position during repositioning of a constricted, hollow cylindrical marrow nail head or a flattened marrow nail head, has at least two circular segment-shaped gripper jaws which are pivotable relative to one another and which have inwardly extending ends to provide an abutment surface or edge which can securely grip an undercut formed beneath the head portion of the marrow nail. Additionally, the tool includes a cylindrical mandrel disposed generally in the center region between the gripper jaws for entering the marrow nail head, and a securing ring which can be pushed over the gripper jaws for securing the gripper jaws together about the marrow nail adjacent the undercut portion of the marrow nail adjacent the marrow nail head.

Another advantageous feature of a marrow nail tool according to the invention for driving in, extracting and changing the position during repositioning of a flattened marrow nail head, has two parallel gripper jaws which are pivotable relative to one another and whose ends extend toward one another the tool further including a rectangular or square mandrel disposed between the gripper jaws and a securing ring which can be pushed over the gripper jaws for securing the gripper jaws and the undercut portion of the marrow nail adjacent the marrow nail head.

In another embodiment, the marrow nail 1 has a hollow interior including a conically-widened portion. In this embodiment, a pin can be inserted into the hollow interior of the nail. The pin has jaws which are deformable outwardly so as to grip an interior constriction formed by the conically-widened portion of the marrow nail. This spreading engagement is preferably effected by driving in of a pin into the open end of the marrow nail. The tool inserts the pin by a gripper arrangement including two gripping ends connected respectively to two levers, the gripping ends and the levers being pivoted on opposed sides of a pivot point.

In another embodiment, the nail has a hollow interior including a conically-widened portion. In this embodiment, a pin can be inserted into the hollow interior of the nail. The pin has jaws which are biased spread outwardly and to grip behind the conically-widened region of the hollow interior of the nail. This spreading engagement is preferably effected by driving in of the pin from the one end of the nail. A tool having a pair of gripper jaws grips a projecting part of the nail. The tool inserts the pin by gripper arrangement including two gripping ends connected respectively to two levers, the gripping ends and the levers being pivoted on opposed sides of a pivot point.

The invention will be described in greater detail below with reference to embodiments which are illustrated in the drawings.

BRIEF DESCRIPTION OF THE DRAWINGS

FIG. 1 is a longitudinal sectional view of a marrow nail according to the invention, composed of a carbon fiber reinforced plastic.

FIG. 2 is an enlarged illustration of the tip of the marrow nail of FIG. 1.

FIG. 3 is an enlarged view of the marrow nail head of FIG. 1.

FIG. 4 is a longitudinal sectional view of the marrow nail head of FIG. 1, together with a marrow nail removal tool.

FIG. 5 is a cross-sectional view of a constricted marrow nail head according to the invention, together with a marrow nail tool, as taken along line 5—5 of FIG. 4.

FIG. 6 is a cross-sectional view of a flattened marrow nail head according to the invention with an attached marrow nail tool, as would be seen if taken along a line similar to line A—A of FIG. 4.

FIG. 7 is a side view in section of a marrow nail, together with a marrow nail tool shown partially in section, according to the invention.

FIG. 8 is a side view in section of a marrow nail, together with a marrow nail tool having an extension shown partially in section, according to the invention.

DETAILED DESCRIPTION OF THE PREFERRED EMBODIMENTS

FIG. 1 is a longitudinal section taken through a tubular marrow nail 1 which is composed of carbon fiber reinforced plastic. As seen in FIG. 1, the marrow nail 1 has a longitudinal axis A which is slightly curved longitudinally generally in the shape of a C. The marrow nail 1 has a tip 2 as well as a constricted head 3. In the region of the tip 2, the diameter of the marrow nail 1 is about 10 mm. Preferably, the tubular marrow nail 1 has the shape of a hollow cylinder.

The carbon fiber reinforced plastic marrow nail 1 is manufactured starting with a tube of carbon fiber which is preferably knit in a crisscross fashion having many interconnections. This tube is then saturated with a hardenable plastic. The hardenable plastic is preferably composed of a biocompatible TEEC matrix material which embeds the carbon fibers and which hardens at a high temperature of preferably 380° C.

Alternatively, other materials can be used for the hardenable plastic, such as, for example, polyamide 6 or polyamide 6,6. Additionally, materials can be used which are customarily referred to as bulk plastics, such as, for example, polyolefins (polyethylene, polypropylene). In conjunction with the carbon fibers according to the invention, this produces a high strength marrow cavity nail 1 which is distinguished by high tensile strength and stiffness as well as high heat resistance. These qualities are ordinarily associated only with metal materials; however, the aforementioned characteristics of the novel nail 1 can even exceed the corresponding characteristics of a similar nail made of a metal material.

The C or J shape of the marrow nail 1 can be obtained by the introduction of a suitable core in the form of, for example, a cylindrical wire having the corresponding outer diameter, and around which the knit tube of carbon fibers is formed or drawn. After application and hardening of a suitable synthetic resin, the core (not shown) can be removed and the marrow nail 1 made of carbon fiber reinforced plastic can be worked further.

To obtain a smooth surface for the marrow nail 1, the hardenable synthetic resin can be applied under high pressure, or alternatively the surface of the marrow nail 1 may subsequently be polished.

The use of a carbon fiber reinforced plastic material for the production of a marrow nail 1, in conjunction with formation of a suitable diameter of the marrow nail 1, ensures that when the marrow nail 1 is driven into the marrow cavity of a bone, it is possible to guide the marrow nail 1 accurately from its point of entry in the bone without bending of the marrow nail 1 and without the marrow nail 1 having uncontrolled movements. The tip 2 of the marrow nail 1 has a sharply ground annular cutting edge which permits driving in of the marrow nail 1 with little force while avoiding crushing of bone marrow during the driving-in process.

When the marrow nail 1 is inserted in the bone, it is distinguished by its high rotational stability and its ability to absorb even the strongest vibrations without material fatigue. A further advantage is its good tissue compatibility and the avoidance of any negative influences on the bone marrow such as may occur, for example, in conjunction with a steel nail due to corrosion. The cylindrical, slightly bent shape of the marrow nail 1, in conjunction with its selected diameter, permits secure contact of the marrow nail 1 in the marrow cavity of the bone and thereby provides the prerequisite characteristics necessary for a marrow nail used for the stabilization of bone fragments, when only a single marrow nail is used.

Extraction of the marrow nail 1 when the fracture is healed can be performed easily by gripping the constricted or flattened head 3 of the marrow nail 1, without the danger of the marrow nail 1 breaking off, since the marrow nail 1 is composed of a fiber material which is bonded together, rather than metal which tends to brea relatively easily.

FIG. 2 shows, at an enlarged scale, the tip 2 of the marrow nail 1 and clearly shows a conically, slightly tapered outer face 21 of the tip 2. This outer face 21 is created preferably by sharp grinding of the tip 2, so as to thereby create an annular cutting edge.

FIG. 3 shows, to an enlarged scale, the marrow head 3 which is composed of a cylindrically constricted or flattened portion 31 and an outwardly thickened, bent or crimped end piece 32, hereinafter referred to as relatively enlarged portion 32. A metal force introducing element 34 in the form of a hollow cylinder of titanium in this embodiment is inserted into the head 3 in the region of the constricted portion 31 before that portion is constricted to form its final shape, namely that of the cylindrically constricted or flattened portion 31. The interior surface of the force introducing element 33 is roughened, preferably in the form of parallel grooves or threaded grooves so that head 3, and with it the entire marrow nail 1, can be pulled out of the marrow cavity in which it has been inserted by the gripping thereof with a suitable tool, for example a forceps, in a force-locking manner for extraction of the marrow nail 1 from the marrow cavity or to change the position of the tip 2 of the nail 1 for repositioning of the marrow nail 1.

Additionally, the constricted or flattened head 3 of the hollow cylindrical marrow nail 1 can also facilitate the attachment of a suitable tool which is to be used for driving the marrow nail 1 into the marrow cavity of a bone.

The metal force introducing element 34 may be inserted, prior to formation of the final marrow nail 1, into the fabric of carbon fibers when the marrow nail 1 is being manufactured. The force introducing element 34 can therefore be bonded to the plastic used to coat the carbon fibers so that, during hardening of the plastic, a firm bond occurs between the plastic-and-carbon-fiber portion of the marrow nail head 3 with the metal force introducing element 34.

As shown in FIG. 4, a marrow nail tool 4 includes two gripper jaws 41 and 42 which are articulated about a common pivot axis (not shown), and which are therefore pivotable relative to one another. The gripper jaws 41 and 42 are shaped to extend inwardly at their lower ends distal from the pivot axis (not shown) and, by engagement with the constricted portion of the marrow nail head 3 adjacent the constricted portion 3, the gripper jaws 41 and 42 also thereby grip an undercut formed between the constricted portion 31 and the relatively enlarged portion 32. This gripping action of the gripper jaws 41 and 42 of the marrow nail tool 4 thereby reliably permits sufficient force to be applied to the marrow nail 1 to cause it to be pulled out of the marrow cavity of the treated bone.

When the mandrel 43 is screwed in, a self-cutting thread 45 disposed thereon cuts into the interior of the constricted region of the nail so that an even better locking engagement can be realized. The thread 45 is partially indicated in FIG. 4 by dashed lines. If such a self-cutting thread is employed, it may be possible to omit a metal sleeve of such as the force introducing element 34. In this case, the thread 45 must have such dimensions that it will not cut through the fibers of the marrow nail 1. This can be realized by reducing the sharpness of the outer thread edges so that this thread portion produces only blunt grooves but does not cut into the nail material in a destructive manner.

To center the marrow nail tool 4 and to improve the force transmission from the tool 4 to the constricted marrow nail head 3, a centrally disposed mandrel 43 is provided. In the attached state of the marrow nail tool 4, the mandrel 43 is engaged in the central, hollow region of the cylindrically constricted portion 31. To change the position of, or to extract the marrow nail 1, the gripper jaws 41, 42 of the tool 4 are placed against the outside surface of the constricted portion 31 on the marrow nail head 3 and then a securing ring 54 is displaced downwardly as seen in FIG. 4 to cause the inwardly extending ends of the gripper jaws 41 and 42 to lie firmly against the outer surface of the constricted marrow nail head 3 at a location which is beneath the aforementioned undercut.

The presence of the metal force introducing element 33 in the constricted marrow nail head 3 serves to increase the friction lock with the mandrel 43 during application of the tool 4 to the marrow nail 1, so that the marrow nail 1 can be reliably extracted.

The marrow nail tool 4 can have different configurations. For example, the tool 4 can have different corresponding elements in dependence on whether marrow nail head 3 is formed to have a constricted shape or a

flattened shape. For example, the FIG. 5 is a cross-sectional view as taken along line A—A of FIG. 4 of a suitable marrow nail tool 4 for use with a marrow nail head 3 which has a constricted, cylindrical shape. FIG. 6 is a cross-sectional view of another embodiment of a suitable marrow nail tool 5 for use with a flattened marrow nail head 3', as would be seen if the nail head 3' were present in FIG. 4 and the section were taken along line A—A of FIG. 4.

In the embodiment shown in FIG. 5, the marrow nail tool 4 is composed of two semicircular gripper jaws 41 and 42 which, in an installed state, grip the region of the tubular marrow nail 1 which is adjacent the constricted portion 31 of the marrow nail head 3. A mandrel 43 is inserted within the constricted portion 31 to center the tool 4 and increase the maximum pressure which can be applied to create a force lock against the constricted marrow nail head 3.

The semicircular gripper jaws 41 and 42 are then firmly enclosed by proper positioning the securing ring 44 so that the gripper jaws lie tightly against the outer surface of the constricted portion 31 of the constricted head 3.

In the embodiment where a flattened marrow nail head 3' is used, as shown in FIG. 6, the pair of gripper jaws 51 and 52 of the marrow nail tool 5 U-shaped and surround the flattened outer surface of the constricted portion 31' of the flattened marrow nail head 3'. In this embodiment, the mandrel 53 has a rectangular cross section and engages in the interior of the flattened marrow nail head 3' which, analogously to the cylindrical embodiment, may be provided with a flat, metal force introducing element (not shown in FIG. 6) to increase the force lock applied by the tool 5.

Around the U-shaped gripper jaws 51 and 52 there is displaceably disposed a hollow rectangular securing ring 54 which secures the gripper jaws 51 and 52 in an installed state of the tool 5.

Other embodiments of the marrow nail tool are also possible. For example, instead of employing two semicircular gripper jaws, a plurality of circular segment-shaped gripper jaws can also be employed. Moreover, it is possible to employ a securing ring that can be screwed on instead of the illustrated slideably displaceable securing ring, in which case the gripper jaws must be provided with a corresponding external thread.

To facilitate rotation of the marrow nail 1 during repositioning, the constricted portion 31 of the marrow nail head 3, as well as the constricted portion 31' of the marrow nail head 3' of the embodiment shown in FIG. 6, may be provided with longitudinally-disposed grooves or the like, in which case the inwardly bent ends of the gripper jaws should be provided with corresponding longitudinal grooves.

In the embodiment shown in FIG. 7, a tool 70 for manipulating the nail includes an elongated hollow element 71 having outwardly oriented jaws 72 and 73 at its ends to be introduced into the marrow nail 1. However, the tubular body of the element 71 is tapered toward the end equipped with the jaws 72 and 73 so that the total diameter including the outwardly oriented jaws 72 and 73 does not exceed the total inner diameter of the marrow nail 1. However, the parts of the element 71 equipped with the jaws 72 and 73 can be spread open, which is made possible by slots provided between the jaws 72 and 73. One slot 74 can be seen in FIG. 7. Element 71 is connected by way of a lever 75 with a gripping end 76, and a pivot pin 77 is provided between the lever 75 and the gripping end 76. Here, another lever 78 is pivotably mounted about the pivot pin 77 and is equipped with a gripping end 79.

The levers 75 and 78 having the respective ends 7 and 79, together with the pivot pin 77, form a forceps-like instrument. At the end of the lever 78 is a spreading pin 81 which is connected to the lever 78 by a pin 80 which is confined to slide within an elongated slot 79. The pin 80 passes through the spreading pin 81 transversely, and is thereby connected with the lever 78 such that, when the gripping ends 76 and 79 are pressed together, the spreading pin 81 is pressed into the element 71.

The spreading pin 81 has a tip 82 which can be pressed into the region of the jaws 72 and 73 to spread them apart once the jaws 72 and 73 have reached a conically widened region 83 of the interior of the marrow nail 1. This position is shown in FIG. 8. Once spread outwardly, the jaws 72 and 73 grip behind the widened region 83 and thereby provide for secure anchorage against pulling out of the pin 81. As a result of this locking engagement of the pin 81 and the marrow nail 1, it is possible for the tool 70 to manipulate the marrow nail 1.

FIG. 8 shows an annular extension 84 which, when the 72 and jaws 73 are spread open into engagement with the marrow nail 1, is disposed on the element 71 adjacent the head end of the marrow nail 1, ensures reliable force transmission in the direction of applied pressure and extraction forces. The shaft of the hollow element 71 can be made substantially longer than indicated in FIG. 8. In this case, a striking member 85 is disposed so as to be slidably displaceable on the hollow element 71 of the tool 70. The striking member 85 can be manipulated along the hollow element 71 on the lever 75 and its extension 86 beyond the spreading pin 81 such that it strikes the extension 86, imparting an impulse force thereto and thereby serving to drive out the marrow nail 1. The force introducing element 34 serves to reinforce the constricted region 3 of the nail. Since the plastic fiber reinforced nail body of the marrow nail 1 is suitable in every way for the transfer of extraction and pressure forces, this element 34 may also be omitted.

The present invention is not limited in its embodiments to the above-described preferred embodiment. For example, an external thickened portion and a constriction of the inner cross section of the marrow nail 1 in its head region need not be present simultaneously. Each one of these features is sufficient for engagement with a corresponding tool. If, however, both features are present at a nail end, this marrow nail 1 can be gripped equally well with different tools.

The present disclosure relates to the subject matter disclosed in German Application No. P 37 34 111.1 of Oct. 6, 1987, the entire specification of which is incorporated herein by reference.

It will be understood that the above description of the present invention is susceptible to various modifications, changes, and adaptations, and the same are intended to be comprehended within the meaning and range of equivalents of the appended claims.

What is claimed is:

1. An elongated intramedullary nail for repair of a bone fracture, said nail comprising a hollow tubular body terminating at opposite ends, and said tubular body adjacent one end thereof having a constricted cross section forming a nail head for engaging a surgical tool.

2. A marrow nail as defined in claim 1, wherein said one end has a thickened end portion.

3. A marrow nail as defined in claim 1, wherein said marrow nail body, including said marrow nail head, is composed of carbon fiber reinforced plastic.

4. A marrow nail as defined in claim 1, wherein said marrow nail body comprises a tubular, carbon fiber reinforced plastic body which is slightly curved along its longitudinal direction; and further comprising a tip having a free end disposed at an end of said marrow nail body distal from said marrow nail head, said tip having an outer surface which is conically tapered toward said free end so as to terminate in an annular cutting edge.

5. A marrow nail as defined in claim 4, wherein said annular cutting edge has a hollow cylindrical crosssection.

6. A marrow nail as defined in claim 4, wherein said tubular, carbon fiber reinforced plastic body includes a tube knit of carbon fibers embedded within a hardenable synthetic resin.

7. A marrow nail as defined in claim 6, wherein said tubular, carbon fiber reinforced plastic body includes carbon fibers which are disposed so as to have a plurality of cross-wise interconnections.

8. A marrow nail as defined in claim 6, wherein said hardenable synthetic resin is a biocompatible TEEC matrix material in which the carbon fibers are embedded and which preferably hardens at a temperature of approximately 380° C.

9. A marrow nail as defined in claim 1, wherein said marrow nail body has a longitudinal axis having a generally C-shaped curvature.

10. A marrow nail as defined in claim 1, further comprising a separate metal force introducing element embedded in said constricted marrow nail head.

11. A marrow nail as defined in claim 10, wherein said metal force introducing element comprises a hollow cylinder having an inner wall which has a rough surface.

12. A marrow nail as defined in claim 11, wherein said rough surface has a plurality of radial grooves therein.

13. A marrow nail as defined in claim 10, wherein said metal force introducing element is composed of titanium.

14. A marrow nail as defined in claim 11, wherein said rough surface has threading therein.

* * * * *

United States Patent [19]

Lee

[11] Patent Number: 4,513,754

[45] Date of Patent: Apr. 30, 1985

[54] **BIOPSY AND ASPIRATION UNIT WITH A REPLACEABLE CANNULA**

[75] Inventor: Peter F. Lee, Edina, Minn.

[73] Assignee: Southland Instruments, Inc., Edina, Minn.

[21] Appl. No.: 622,100

[22] Filed: Jun. 19, 1984

Related U.S. Application Data

[63] Continuation of Ser. No. 306,305, Sep. 28, 1981, abandoned, and a continuation-in-part of Ser. No. 88,818, Oct. 26, 1979, Pat. No. 4,314,565, which is a continuation-in-part of Ser. No. 883,263, Mar. 3, 1978, abandoned, which is a continuation-in-part of Ser. No. 706,130, Jul. 16, 1976, abandoned.

[51] Int. Cl.³ A61B 10/00

[52] U.S. Cl. 128/753; 128/754; 604/240

[58] Field of Search ..... 128/753, 754, 752, 751, 128/310; 604/264, 272, 283, 240, 241, 243; 279/20, 42, 40, 48, 123, 1 J, 1 ME; 433/147

[56] **References Cited**

U.S. PATENT DOCUMENTS

449,246	3/1891	Graham	279/42
1,045,886	12/1912	Reay	279/42
1,585,934	5/1926	Muir .	
2,198,319	4/1940	Silverman .	
2,219,605	10/1940	Turkel	128/753
2,426,535	8/1947	Turkel .	
2,496,111	1/1950	Turkel .	
2,516,492	7/1950	Turkel .	
3,186,408	6/1965	Jacob .	
3,477,423	11/1969	Griffith .	
3,598,108	8/1971	Jamshidi et al. .	
3,628,524	12/1971	Jamshidi .	
3,630,192	12/1971	Jamshidi .	
3,850,158	11/1974	Elias et al. .	
3,893,445	7/1975	Hofsess .	
4,010,737	3/1977	Vilaghy et al. .	
4,099,518	7/1978	Baylis et al. .	
4,142,517	3/1979	Stavropoulos et al. .	
4,177,797	12/1979	Baylis et al. .	
4,256,119	3/1981	Gauthier .	
4,258,722	3/1981	Sessions et al. .	
4,262,676	4/1981	Jamshidi	128/754 X
4,266,555	5/1981	Jamshidi .	

FOREIGN PATENT DOCUMENTS

244467	1/1948	Switzerland	604/166
379267	4/1973	U.S.S.R. .	

Primary Examiner—Michael H. Thaler

Attorney, Agent, or Firm—Merchant, Gould, Smith, Edell, Welter & Schmidt

[57] **ABSTRACT**

A bone marrow biopsy and aspiration needle unit is disclosed. The unit includes a holding device, with a longitudinal bore therethrough, comprising a collect chuck and handle grips, a replaceable cannula to be interlockably mounted in the holding device, with the cannula's lumen in alignment with the longitudinal bore, and an elongated stylet releaseably mounted in the aligned bores. When the needle unit is also to be used for aspiration, a second cannula of a diameter less than the first cannula is inserted through the aligned bores in the holding device and the first cannula.

2 Claims, 15 Drawing Figures

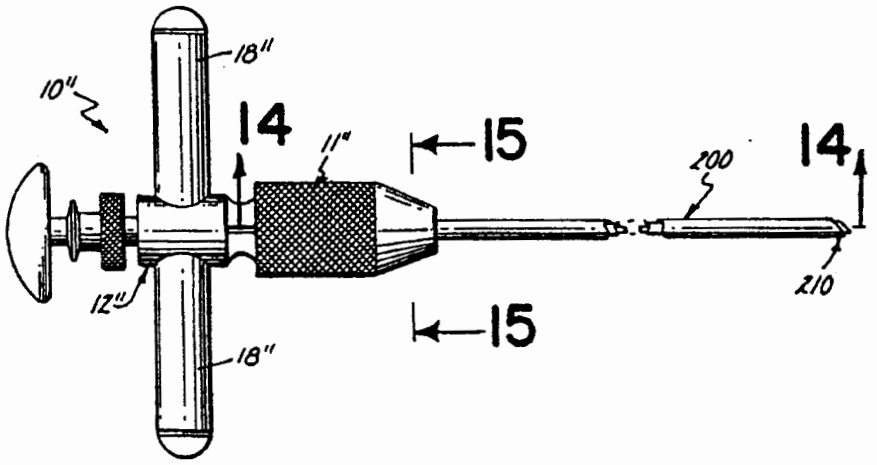

FIG. 1

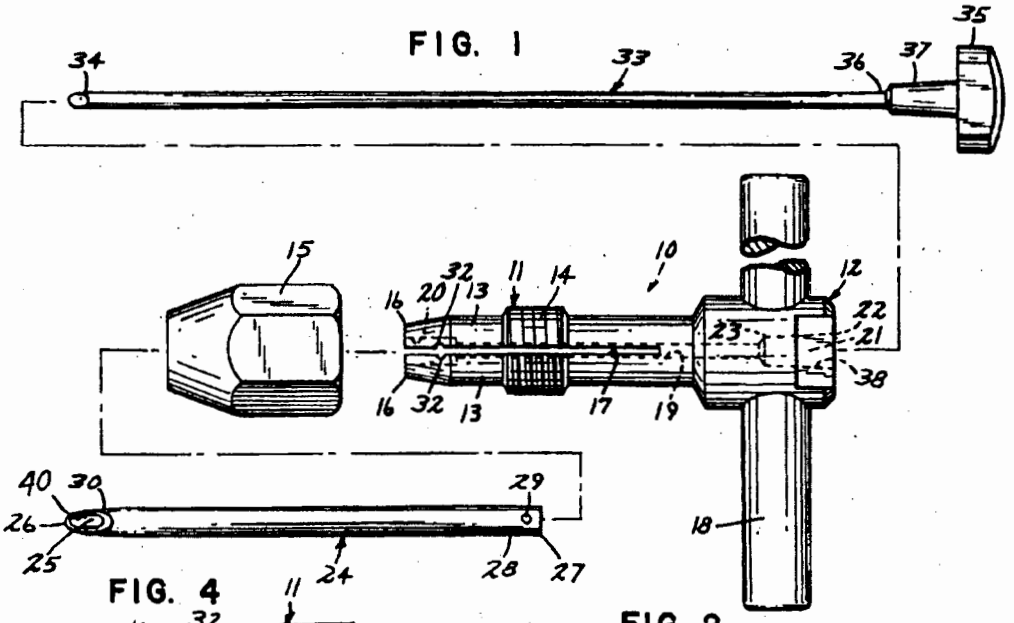

FIG. 4

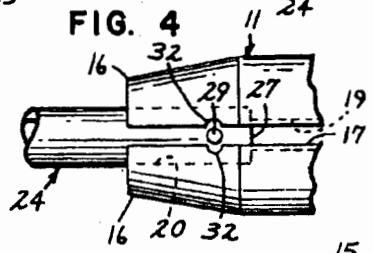

FIG. 2

FIG. 5

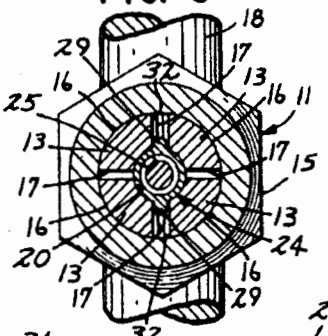

FIG. 3

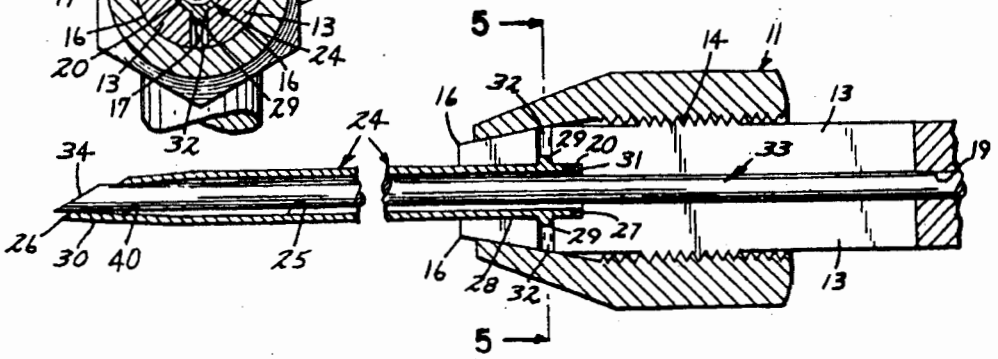

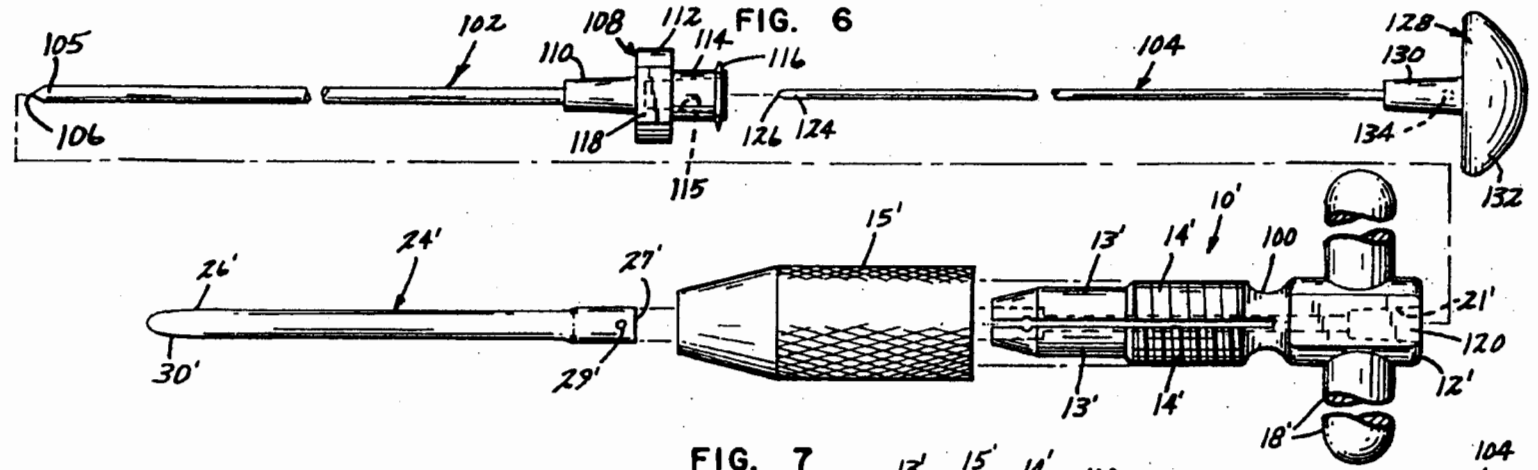

FIG. 6

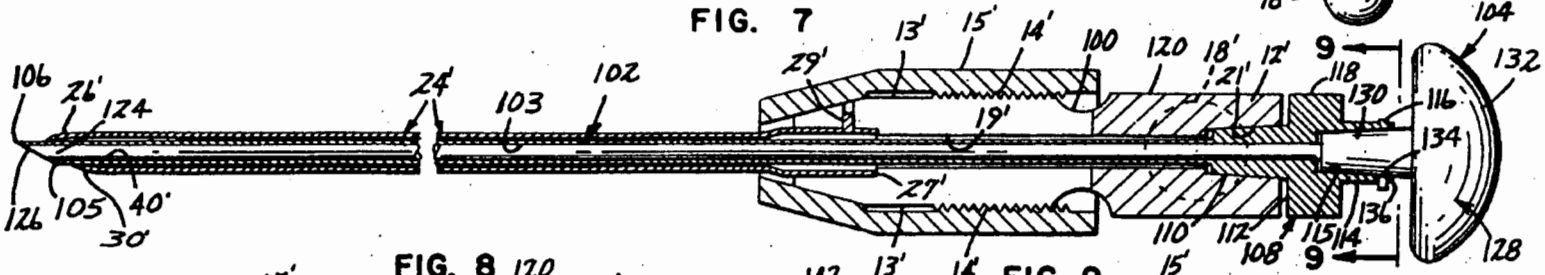

FIG. 7

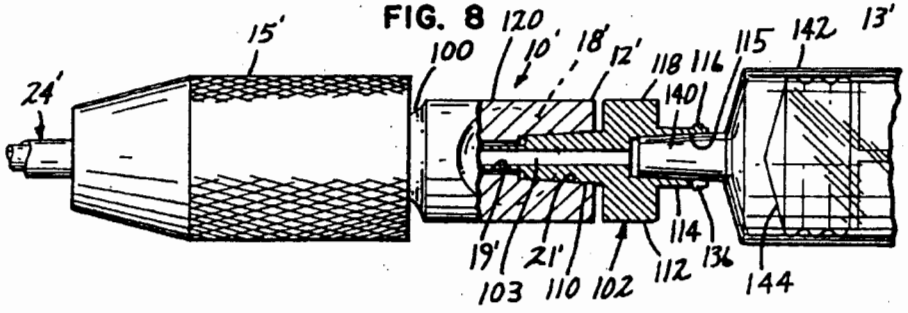

FIG. 8

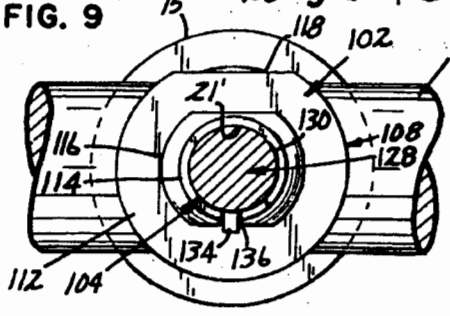

FIG. 9

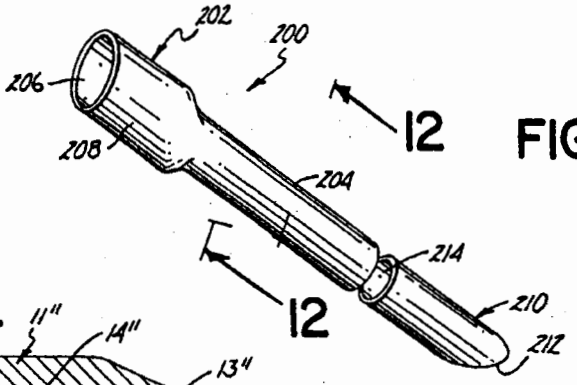

FIG. 10

FIG. 14

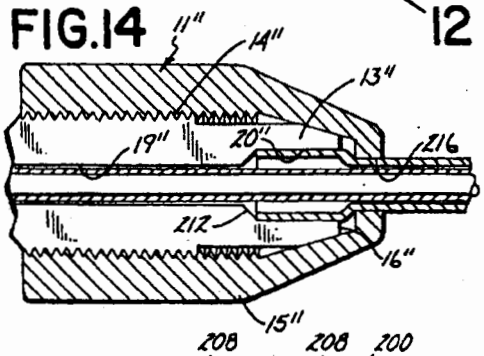

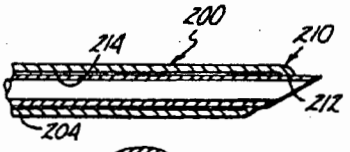

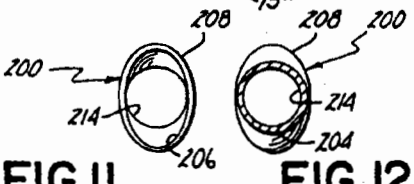

FIG. 11

FIG. 12

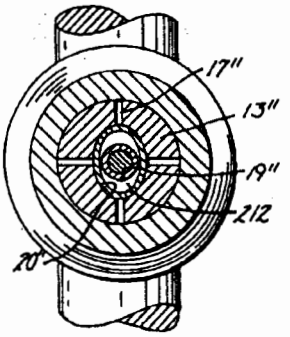

FIG. 15

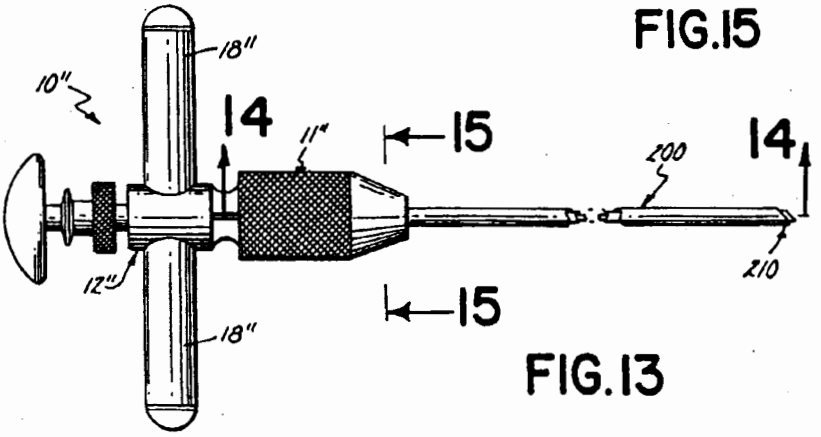

FIG. 13

BIOPSY AND ASPIRATION UNIT WITH A REPLACEABLE CANNULA

CROSS-REFERENCE TO PRIOR APPLICATIONS

This is a continuation of application Ser. No. 306,305, filed Sept. 28, 1981, abandoned, and a continuation-in-part of application Ser. No. 88,818, filed Oct. 26, 1979, now U.S. Pat. No. 4,314,565 which is a continuation-in-part of application Ser. No. 883,263, filed Mar. 3, 1978, now abandoned, which is a continuation-in-part of Ser. No. 706,130, filed July 16, 1976, abandoned.

TECHNICAL FIELD

This invention relates to the field of surgical tools and instruments. More particularly, it relates to the field of devices used to collect bone marrow tissue and fluid specimens for biopsy purposes and the cannulas used in devices of this type.

BACKGROUND OF THE INVENTION

The advantages of examination of a bone marrow specimen undiluted with blood are well-known. Such an examination is essential for the evaluation of many hematologic disorders. A variety of devices have been used for collecting bone marrow specimens. Early bone marrow biopsies were taken from the sternum in operating-room procedures with scoop-like devices. Nonincisional methods utilizing the posterior iliac crest have proven less costly and less dangerous to the patient, and therefore more satisfactory. Such methods involve the introduction of a needle-like collecting device through the skin tissue, and the penetration of the bone cortex with the collecting device to take a small specimen of bone marrow tissue. Because of the pressure needed to bore through the cortex of the bone, and the subsequent cutting through of the trabeculae of the bone marrow, the cutting/collecting needles of prior devices have included integral finger grips of sturdy construction, such as those disclosed in Jamshidi, U.S. Pat. No. 3,628,524. The presence of such sturdy integral grips on the prior art collecting devices has made such devices expensive to use and maintain: the relatively high initial cost of the devices precludes one-time use, and multiple-time use requires resterilization of the device prior to each use and resharpening of the cutting edges. Needle lumens are difficult to clean. Tissue or proteinaceous matter left in the lumen can result in pyrogens that are unaffected by heat sterilization. Resharpening requires time and special skills. Thus, the amount of handling required by the prior art devices leads to high costs and increased chance for human error.

It is often desirable to aspirate fluids from bone tissue in addition to taking bone marrow tissue itself. Numerous devices have been available to aspirate fluids from bone tissue. Such prior art aspiration devices, however, have either been separate from the prior art devices used to take bone marrow tissue samples, or have used a bone marrow biopsy unit for aspiration. However, a bone marrow biopsy unit generally does not have the optimum diameter for aspirating fluids.

SUMMARY OF THE INVENTION

This invention provides a biopsy device that will allow for the interchange of various lengths and gauges of presterilized, pyrogen-free, single-use needles capable of obtaining and retrieving a superior histologic, undistorted bone marrow specimen at an economical cost and with minimum patient discomfort. This is accomplished in the present invention by utilizing a permanent needle-holding means and a replaceable cutting-/collecting needle, or cannula, in conjunction with a stylet. The cannula is a hollow needle with an inner and outer taper at its distal end. The holding means incorporates a collet chuck and handle grips. The holding means has a bore along its longitudinal axis to accommodate the stylet. Since, in use, strong compression, tension, and twisting forces are applied along and around the longitudinal axis of the unit, the cannula must be securely mounted in the holding means to prevent any slippage or dislodging of the cannula during its insertion and removal. This secure mounting is achieved by counterboring the jaw portion of the collet chuck to accommodate a replaceable cannula, which is of a generally larger diameter than the longitudinal bore in the holding means. The interface of the jaw counterbore with the longitudinal bore defines an annular end wall, against which the proximal end of the cannula abuts when mounted, thus preventing the cannula from slipping further into the holding means while being inserted through the bore cortex. One embodiment of the jaw counterbore is the provision of at least one recessed portion, which coincides with at least one raised portion on the external proximal end surface portion of the cannula, so that when the proximal end of the cannula is placed in the jaw counterbore and the jaws are tightened around the cannula by tightening the collar nut of the collet chuck, the raised portion of the cannula interlocks with the recessed portion of the jaw counterbore. This interlock prevents movement of the cannula around the longitudinal axis of the unit when a twisting force is applied thereto, and it also prevents the cannula from slipping out of the holding means when a pulling force is exerted on the holding means to remove the cannula from the bone cavity.

In the present invention, another embodiment of the interlock means for securely mounting the cannula in the holding means is the design and construction of the proximal end portion of the cannula as an elliptical portion extending from the remaining greater length of the cannula which has a circular cross-section. The outer surface of the proximal end portion is left unobstructed, without any raised portions. When the elliptical proximal end portion is placed into the jaw counterbore and the jaws tightened around the cannula by tightening the collar nut of the collet chuck, the elliptical proximal end portion of the cannula is interlocked between the jaws. This interlock prevents movement of the cannula around the longitudinal axis of the unit when a twisting force is applied. The cannula is also prevented from ever being dislodged when the pulling forces are exerted on the holding means during the use of the assembled needle unit as the elliptical portion cannot pass through the circular bore of the collar nut. The single piece construction of the cannula ensures a secure and reliable holding of the proximal end portion within the holding means. Thus, the structural advantages of a one-piece cannula as well as the advantages of an inexpensive, replaceable cannula are achieved in the present invention.

The invention is also an improvement directed to a needle unit capable of both retrieving a bone marrow specimen and aspirating fluids. In order to accomplish this dual function, the needle unit includes a second

cannula which has an outer diameter less than the inner diameter of the cannula and the bore through the holding means. In this manner, the second cannula is inserted through the top of the holding means and passes through the longitudinal bore therein and through the hollow interior of the first cannula. The second cannula has a hollow interior extending throughout its entire length of an inner diameter appropriate for aspirating fluids. The outer end of the second cannula friction fits within a counterbore in the top of the holding means. A second stylet is inserted through the hollow interior of the second cannula during the insertion of the needle unit into a bone. In order to aspirate a fluid sample, the stylet is removed and an empty syringe is friction fit into the top of the second cannula. By withdrawing the plunger of the syringe, a fluid sample is aspirated. After the aspiration procedure has been accomplished, the second cannula can be removed and the first stylet replaced therefor. The needle unit can thereafter be moved further into the bone and the first stylet removed at the appropriate point to collect a bone marrow tissue specimen.

BRIEF DESCRIPTION OF THE DRAWINGS

FIG. 1 is an exploded elevation of the biopsy needle unit;

FIG. 2 is a view in elevation of the assembled biopsy needle unit;

FIG. 3 is a sectional view of a portion of the biopsy needle unit as seen from the line 3—3 of FIG. 2;

FIG. 4 is a fragmentary plane view of a portion of FIG. 2 with parts removed therefrom;

FIG. 5 is a sectional view as seen from the line 5—5 of FIG. 3;

FIG. 6 is an exploded elevation of the needle unit for use in aspirating fluids;

FIG. 7 is a longitudinal sectional view, partially broken away, of the assembled needle unit for aspirating fluids;

FIG. 8 is a partial view in elevation, partially broken away, illustrating a syringe inserted into the second cannula;

FIG. 9 is a view taken generally along line 9—9 of FIG. 7;

FIG. 10 is a perspective view of the replaceable cannula of the present invention;

FIG. 11 is a view in elevation of the replaceable cannula shown in FIG. 10 as viewed from the open proximal end of the cannula;

FIG. 12 is a sectional view of a portion of the replaceable cannula as seen from line 12—12 of FIG. 10;

FIG. 13 is a view in elevation of the assembled needle unit capable of aspirating fluids in which the replaceable cannula of FIG. 10 is used;

FIG. 14 is a sectional view of a portion of the assembled needle unit as seen from line 14—14 of FIG. 13; and

FIG. 15 is a sectional view of a portion of the assembled needle unit as seen from line 15—15 of FIG. 13.

DESCRIPTION OF THE PREFERRED EMBODIMENT

FIG. 1 shows the elements of a bone marrow biopsy unit. Generally T-shaped holding means 10 include a collet chuck 11 and a head portion 12. Collet chuck 11 comprises a plurality of arms 13 with external threading 14 thereon to engage collar nut 15. Each arm 13 terminates in a jaw portion 16, and is separated from each other arm 13 by a compressible, generally planar space, or slot 17, running the length of each arm 13. A handle 18 extends from head portion 12 at generally right angles to the longitudinal axis of holding means 10. A longitudinal bore 19 of circular cross section runs along the longitudinal axis and through head portion 12 and collet chuck 11. A first counterbore 20 of uniform circular cross section runs along the longitudinal axis through jaw portions 16, and a second counterbore 21 runs along the longitudinal axis in head portion 12. Second counterbore 21 tapers uniformly from a first diameter 22 to a smaller, second diameter 23, which is larger than the diameter of longitudinal bore 19.

A replaceable cannula 24 has a bore, or lumen 25, an open distal end 26, which defines a cutting edge outwardly beveled and obliquely disposed to the longitudinal axis of cannula 24, an open proximal end 27, and an external proximal end surface portion 28 with raised portions. In this embodiment two hemispherical beads 29 are annularly disposed 180° apart thereon, as indicated in FIGS. 3 and 5. Cannula 24 has a generally circular cross section of uniform inside and outside diameter along the major portion of its length and internal and external distal end portions 40 and 30 uniformly tapered toward distal end 26.

First counterbore 20 is of a diameter generally equal to the outside diameter of cannula 24 at proximal end 27. Said diameter is larger than the diameter of longitudinal bore 19. An annular end wall 31 is formed at the interface of longitudinal bore 19 and first counterbore 20.

Jaw portions 16 have recesses, grooves 32 in the preferred embodiment, to interlock with beads 29 when cannula 24 is mounted in holding means 10. Grooves 32 are generally in the planes defined by slots 17 and are along an axis transverse to the longitudinal axis of the holding means 10, as depicted in FIGS. 3 and 5. Each groove 32 has a semicircular cross section of radius corresponding to the radii of beads 29.

Beads 29, grooves 32, and end wall 31 comprise a means for interlockingly mounting cannula 24 in holding means 10, which is accomplished by placing proximal end 27 in first counterbore 20, as shown in FIG. 4, and tightening collar nut 15 as shown in FIG. 3. When so mounted, lumen 25 is aligned with longitudinal bore 19.

An elongated stylet 33 has distal end 34 defining a sharpened cutting edge obliquely disposed to the longitudinal axis of stylet 33 at an angle equal to that at which distal end 26 is disposed to the longitudinal axis of cannula 24, as shown in FIG. 3. Stylet 33 has a cap portion 35 at its proximal end 36 having an elongated stem portion 37. Stem portion 37 has a tapered circular cross section corresponding to that of second counterbore 21. When stylet 33 is releasably mounted in the aligned longitudinal bore 19 of holding means 10 and lumen 25 of the mounted cannula 24, as shown in FIG. 3, stem portion 37 frictionally engages the interior surface 38 of second counterbore 21 as shown in FIG. 2, and distal end 34 extends a predetermined distance beyond distal end 26 to prevent bone matter from entering lumen 25 while the unit is boring through the bone cortex to the bone cavity. In the preferred embodiment, the predetermined distance is two millimeters.

In use, replaceable cannula 24 is interlockingly mounted in holding means 10, and stylet 33 is releaseably mounted in the aligned longitudinal bore 19 and lumen 25 with stem portion 37 frictionally engaging

interior surface 38 of second counterbore 21. Cannula 24, with stylet 33 in place, is then inserted through the skin tissue of a patient to the bone cortex.

Longitudinal and twisting forces are applied to holding means 10 until distal ends 26 and 34 enter the bone cavity, at which time stylet 33 is removed from aligned bore 19 and lumen 25. Cannula 24 is then forced several centimeters further into the bone cavity to collect a specimen of marrow tissue in lumen 25, after which cannula 24 is removed from the bone cavity and patient by exerting a pulling force on holding means 10. The specimen is removed from lumen 25 by first removing cannula 24 from holding means 10, and then inserting stylet 33 into lumen 25 by way of distal end 26 and gently probing the specimen to force it out of lumen 25 at proximal end 27.

Cannula 24, being a relatively inexpensive element of the unit, can be disposed of before resterilization and resharpening are required, and replaced by a new, presterilized cannula of the requisite length and gauge for use in subsequent specimen-gathering instances, thus accomplishing the objectives of the invention.

FIGS. 6–9 illustrate an embodiment which can be used to aspirate fluid from bone tissue, in addition to extracting bone marrow tissue. Portions of the needle unit illustrated in the FIGS. 6–9 which are similar portions of the unit illustrated in FIGS. 1–5, will be designated by like primed numerals.

The holding means 10′ and the replaceable cannula 24′ are the same as the holding means 10 and the cannula 24, except in the following minor details. The taper of the distal end 26′ of the cannula 24′ is reduced. The open proximal end 27′ is flared outwardly to a greater diameter than the remaining portion of the cannula 24′; and only a singular bead 29′ is utilized. The collar nut 15′ is slightly longer than the collar nut 15 and has a round knurled outer surface. The external threading 14′ on the arms 13′ extends over a slightly longer longitudinal length. The outer ends of the handle 18′ are rounded. An annular cutout 100 is formed in the holding means 10′ at a location between the threaded portion 14′ of the arms 13′ and the head portion 12′.

So that the needle unit can aspirate fluid in addition to extracting the bone marrow tissue, a second cannula 102 and a second stylet 104 are provided.

The second cannula has an outer diameter less than the inner diameter of the first cannula 24′ and the longitudinal bore 19′ of the holding means 10′. In this manner, the second cannula 102 can be received within the first cannula 24′ and the holding means 10′. The second cannula 102 has a bore or lumen 103 with an inner diameter which is necessarily less than the inner diameter of the first cannula 24′ and is of the proper size for the aspiration of fluids from bone tissue. The second cannula 102 has an open distal end 105 with a sharpened cutting edge 106 obliquely disposed to the longitudinal axis of the cannula 102. The second cannula 102 also has a proximal end or head portion 108. The proximal end 108 includes a tapered engagement section 110, an alignment ring 112, and a cylindrical section 114 with a coupling collar 116. The engagement section 110 has a taper which mates with the taper of the counterbore 21′ so that the engagement section 110 can frictionally engage with the counterbore 21′ of the holding means 10′. The alignment collar 112 has a flat 118 and the head portion 12′ has a flat 120. By aligning the flat 118 with the flat 120, the angle at which the cutting edge 106 is disposed can be aligned with the angle at which the proximal end 26′ is cut. See FIG. 8. The head portion 108 also has a counterbore 115 through it in alignment with the lumen 103. The counterbore 115 has an inner diameter which tapers radially outwardly from a small diameter, which is larger than the diameter of the lumen 103, to a larger diameter.

The stylet 104 has a distal end 124 with a sharpened cutting edge 126 obliquely disposed to the longitudinal axis of the cannula 102. The stylet 104 has a proximal end 128 with a tapered engagement or stem portion 130 and a cap portion 132. The stem portion 130 has a tapered circular cross section corresponding to that of the counterbore 115 of the proximal end 108 of the second cannula 102. A finger or pin 134 extends outwardly from the stem portion 130 and is received within a slot 136 formed through the cylindrical section 114 and the coupling collar 116. In this manner, the stylet 104 is frictionally held by the mating engagement between the outer surface of the stem portion 130 and the inner surface of the counterbore 115, and the angle at which the cutting edge 126 is set is aligned with the angle of the cutting edge 106 by inserting the finger 134 within the slot 136.

The needle unit is used in the following manner to obtain a fluid sample. The cannula 24′, the cannula 102 and the stylet 104 are assembled and inserted into a bone cavity to a point where a fluid sample is to be taken. Thereafter the stylet 104 is removed and a tip 140 of a syringe 142 is inserted into the counterbore 115. A plunger 144 of the syringe 142 is pulled back within a cylinder of the syringe 142 in order to aspirate fluid. The fluid is drawn through the cannula 102 into the cylinder of the syringe 142. The syringe is thereafter removed from the second cannula 102 and the fluid in the syringe can thereafter be removed from the syringe 142 for further testing or treatment. If a bone tissue sample is also required, the cannula 24′ can be further inserted into the bone tissue in the same manner as the cannula 24.

In the present invention, the replaceable cannula and its use in an assembled needle unit is illustrated in FIGS. 10 through 15. In the discussion of the invention which follows, portions of the needle unit which are the same as those in the unit illustrated in FIGS. 6–9 will be designated by like numerals. It is to be understood, however, that the replaceable cannula 200 shown in FIGS. 10–15 can be readily used in a needle unit of the type shown in FIGS. 1–5.

In the generally T-shaped holding means 10″ used with the present invention, a collet chuck 11″ and a head portion 12″ are substantially similar to those shown in FIGS. 1–9. The collet chuck 11″ comprises a plurality of arms 13″ with an external threaded portion 14″ for engaging collar nut 15″. Each arm 13″ terminates in a jaw portion 16″, and is separated from each other by a compressible generally planar space, or slot, 17″ running the length of each arm 13″. The jaw portions 16″ appear as a segmented ellipse as can be seen from FIG. 15. A handle 18″ extends from head portion 12″ at generally right angles to the longitudinal axis of holding means 10″. A longitudinal bore 19 of circular cross-section extends through head portion 12″ and into collet chuck 11″ to just past or up to a point within the collet chuck 11″ corresponding to the distal end edge of the threaded portion 14″. A counterbore 20″ of uniform elliptical cross-section extends along the longitudinal axis through jaw portions 16″ to a point near the end of the first bore 19″. The counterbore 20″ is joined with

the first bore 19" by a sloping surface 212 which forms an end wall or interface between the two bores.

The replaceable cannula 200 of the present invention is shown in prespective in FIG. 10. The replaceable cannula 200 of the present invention has a bore, or lumen, 214, a distal end porton 210, an open distal end 212 which defines a cutting edge outwardly beveled and obliquely disposed to the longitudinal axis of the cannula 200, a proximal end portion 202, an open proximal end 206, and a smooth, unobstructed external proximal end surface 208. The proximal end portion 202 is an ellipticity in contrast to the remaining elongated body portion 204 which has a generally circular cross-section along its length. The ellipticity of the proximal end portion 202 is designed and constructed as a protruding portion formed from the same piece as the remaining cannula portion 204. The proximal end portion thus has an elliptical or oval cross-section. The different cross-sections of the two portions of the cannula 200 can be more clearly understood from a study of FIGS. 11 and 12. FIG. 11 is an elevational view of the cannula 200 as viewed from the proximal end 206.

When the proximal end portion 202 of the cannula 200 is placed in the jaw counterbore 20" it is inserted a sufficient length so that the proximal end 206 abuts the end wall 212. The jaws 16" are tightened around the cannula 200 by tightening the collar nut 15" of the collet chuck 11". The interior jaw surfaces contact the proximal end portion exterior surface 208 and securely grasp the proximal end portion 202 preventing any turning or twisting movement of the cannula. See FIG. 15. Due to the elliptical configuration of the proximal end portion and the circular diameter of the bore 216 which extends through the collet chuck 11" there can be no release or dislodging of the cannula 200 from the holding means 10" as the elliptical proximal end portion cannot pass through the circular bore 216. The stainless steel construction is of sufficient strength to resist deforming from the pulling forces and this will maintain the elliptical cross-section. With the cannula end 206 abutting the end wall 212, longitudinal movement of the cannula 200 within the holding means 10" is also prevented.

The cannula 200 is formed from a single piece of stainless steel. Great strength is achieved in the cannula 200 of the present invention as a result of the one-piece construction. Despite the significant twisting and pulling forces involved in the use of the assembled needle unit, the construction of the replaceable cannula 200 has proven reliable and durable. It is virtually impossible for a human being using either the needle unit shown in FIGS. 1-5 or the needle and aspirating unit shown in FIGS. 6-9 to exert the forces which would be necessary to deform the stainless steel in order to dislodge the cannula of the present invention from the unit while inserting or withdrawing the needle unit from the patient.

Cannula 200 is a relatively inexpensive item and as such it can be used once and then disposed of before resterilization and/or resharpening are necessary. A replacement cannula 200 which is new and presterilized can then be used for subsequent specimen-gathering.

Numerous characteristics and advantages of the invention have been set forth in the foregoing description, together with details of the structure and function of the invention, and the novel features thereof are pointed out in the appended claims. The disclosure, however, is illustrative only, and changes may be made in detail, especially in matters of shape, size, and arrangement of parts, within the principle of the invention, to the full extent extended by the broad general meaning of the terms in which the appended claims are expressed.

What is claimed is:

1. An improved bone marrow biopsy needle unit, comprising:

holding means including a collet chuck and a head portion aligned coaxially so that a line running along the common axis defines a longitudinal axis of said holding means, a bore of circular cross section along said longitudinal axis through said head portion and said collet chuck, and handle means extending from said head portion generally at right angles to said longitudinal axis, said collet chuck comprising a plurality of arms with external threading thereon, adjacent arms being separated by a generally longitudinally extending slot, each arm terminating in a jaw portion, and a collar nut to threadedly engage and radially compress said arms, each arm having an interior surface, said interior surfaces defining a segmented ellipse when said arms are not compressed by said collar nut;

an elongated stylet, of predetermined length and gauge of generally uniform circular cross-section mounted in said aligned bores, said stylet having a distal end, a proximal end, and a cap portion at said proximal end;

engaging means on both said stylet and said head portion cooperating to releasably engage said stylet and said holding means;

and a replaceable cannula, of predetermined length and gauge, of uniform hollow cylindrical configuration throughout the major portion of its length, having an open distal end, defining a cutting edge, an open proximal end, and an external proximal end surface portion;

said replaceable cannula being of single-piece, stainless steel construction;

said proximal end portion having a generally elliptical cross-section and formed as a continuous extension of said cannula major portion, said proximal end portion being adapted to be releasably mounted in said collet chuck with a bore thereof being coaxially aligned with said bore of said holding means,

whereby said cannula is prevented from movement along or around said longitudinal axis by said proximal end portion being securely grasped by said arms of said collet chuck with said proximal end substantially abutting said collar nut and said collar nut compressing said interior surfaces of said arms of said collect chuck against said proximal end as said collar nut is threaded onto said collet chuck.

2. An improved needle unit comprising:

holding means including a collet chuck and a head portion aligned coaxially so that a line running along the common axis defines a longitudinal axis of said holding means, a bore of circular cross-section along said longitudinal axis through said head porton and said collet chuck, and handle means extending from said head portion generally at right angles to said longitudinal axis, said collet chuck comprising a plurality of arms with external threading thereon, adjacent arms being separated by a generally longitudinally extending slot, each arm terminating in a jaw portion, and a collar nut to threadedly engage and radially compress said arms, each arm having an interior surface, said

interior surfaces defining a segmented ellipse when said arms are not compressed by said collar nut;

a replaceable cannula, of predetermined length and gauge, having an open distal end, an elongate body portion of generally circular cross-section, an open proximal end and a proximal end portion;

a second cannula having an outer diameter less than the inner diameter of said first cannula and the bore through said holding means, said second cannula having a distal end for insertion into said first cannula and a proximal end which extends out of said head portion when said second cannula is inserted into said first cannula and holding means in an operative position, said proximal end of said second cannula having a counterbore sized to frictionally engage a tip of a syringe; and

a stylet having an outer diameter less than the inner diameter of said second cannula for insertion into said second cannula, and means for releasably holding said stylet within said second cannula;

said replaceable cannula being made of stainless steel and having a single-piece construction; and

said replaceable cannula proximal end portion being formed continuous with said elongate body portion and having a generally elliptical cross-section, said replaceable cannula being adapted to be releasably mounted in said collet chuck by said collar nut compressing said interior surface of said arms of said collet chuck against said proximal end for preventing movement of said replaceable cannula along or around said longitudinal axis of said holding means when said proximal end of said replaceable cannula is mounted in said collet chuck.

* * * * *

O

REDACTED DOCUMENT

P

IN THE UNITED STATES DISTRICT COURT
FOR THE DISTRICT OF DELAWARE
---o0o---

KYPHON, INC.,	)	
	)	
Plaintiff,	)	
	)	
vs.	)	Case No.
	)	04-0204-JJF
DISC-O-TECH MEDICAL	)	
TECHNOLOGIES, LTD., and DISC	)	
ORTHOPAEDIC TECHNOLOGIES, INC.,	)	
	)	
Defendant.	)	
	)	

---o0o---

WEDNESDAY, NOVEMBER 3, 2004

VIDEOTAPE DEPOSITION OF MARK REILEY, M.D.
---o0o---

REPORTED BY: BALINDA DUNLAP, CSR 10710, RPR, CRR, RMR

BARKLEY COURT REPORTERS (415) 433-5777

A. Yes.

Q. Okay. Dr. Reiley, if you could just pick up what's been marked as Exhibit 2, which is the 404 patent. I'd like to direct your attention specifically to the claims, which is the second-to-last page in the patent.

I'm just going to go ahead and read the preamble, which is the first sentence there, and then the first two limitations on which I'll ask you some questions.

"Claim one is a method of fixation of a fracture or impending fracture of a bone having bone marrow therein comprising: Forming a passage in the bone marrow; compacting the bone marrow to increase the volume of said passage." Do you see that?

A. Yes.

Q. Okay. Can you tell me what your understanding of the phrase "compacting the bone marrow to increase the volume" means?

MS. BOYD: Objection. Calls for a legal conclusion.

Q. BY MR. NAMROW: I am not asking for -- I am not asking you to be a lawyer. I am just asking you as the inventor of the patent, as an orthopaedic surgeon, what your understanding of that is?

A. I think that would be pretty clear to anybody.

Q. Well, let me ask you this: What is bone marrow?

A. Bone marrow is a combination of things. It is both

the cancellous, or trabecular bone, along with the bone-forming elements.

Q. But bone marrow --

MS. BOYD: I think you misspoke. The bone-forming elements?

THE WITNESS: Blood-forming elements. Sorry. Although you would probably refer to the bone marrow in the femur in an adult as bone marrow, even though it only has fat and trabecular bone, it loses its blood-forming elements past the age of 21. Probably still refer to that as bone marrow.

Q. BY MR. NAMROW: But you described it as including cancellous bone?

A. Yes.

Q. Those are not two different structures?

A. No, not in this case.

Q. Why wouldn't they be in this case?

A. Because that's the way we design this. We wanted those -- the blood and the blood-forming elements to be crushed along with the bone to help form a dam.

And that dam, if you leave the inflatable device up for two to five minutes, you get a nice clot around it, and then you are much less likely to have leakage of the cement that you inject.

So we planned on expanding against all the substance within the vertebral body.