

REDACTED DOCUMENT

R

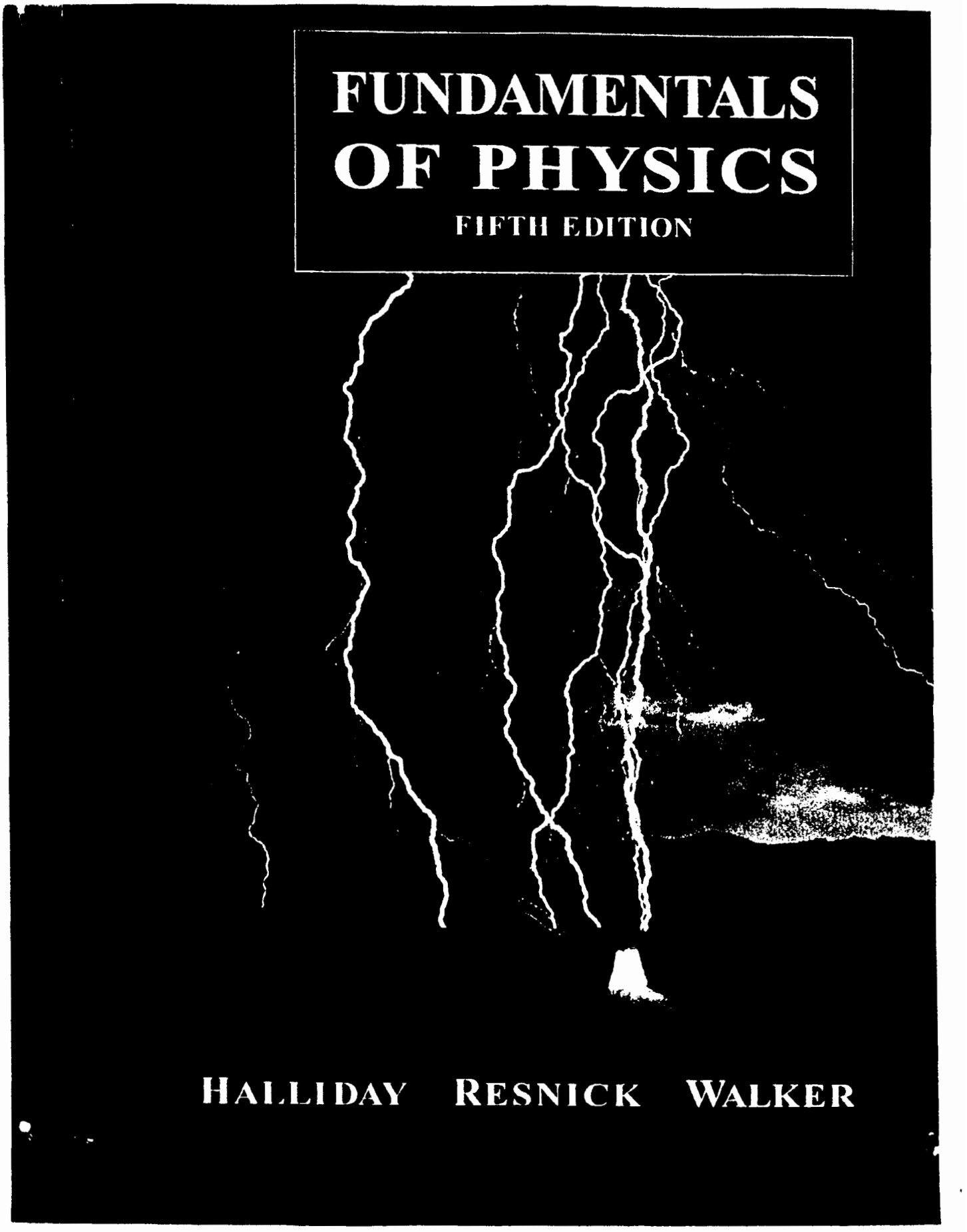
FUNDAMENTALS
OF PHYSICS
FIFTH EDITION
HALLIDAY RESNICK WALKER

FIFTH EDITION

FUNDAMENTALS OF PHYSICS

DAVID HALLIDAY
University of Pittsburgh

ROBERT RESNICK
Rensselaer Polytechnic Institute

JEARL WALKER
Cleveland State University



JOHN WILEY & SONS, INC.
New York • Chichester • Brisbane • Toronto • Singapore

ACQUISITIONS EDITOR Stuart Johnson
DEVELOPMENTAL EDITOR Rachel Nelson
SENIOR PRODUCTION SUPERVISOR Cathy Ronda
PRODUCTION ASSISTANT Raymond Alvarez
MARKETING MANAGER Catherine Faduska
ASSISTANT MARKETING MANAGER Ethan Goodman
DESIGNER Dawn L. Stanley
MANUFACTURING MANAGER Mark Cirillo
PHOTO EDITOR Hilary Newman
COVER PHOTO William Warren/Westlight
ILLUSTRATION EDITOR Edward Starr
ILLUSTRATION Radiant/Precision Graphics

This book was set in Times Roman by Progressive Information Technologies, and printed and bound by Von Hofmann Press. The cover was printed by Phoenix Color Corp.

Recognizing the importance of preserving what has been written, it is a policy of John Wiley & Sons, Inc. to have books of enduring value published in the United States printed on acid-free paper, and we exert our best efforts to that end.

The paper on this book was manufactured by a mill whose forest management programs include sustained yield harvesting of its timberlands. Sustained yield harvesting principles ensure that the number of trees cut each year does not exceed the amount of new growth.

Copyright © 1997, by John Wiley & Sons, Inc.

All rights reserved. Published simultaneously in Canada.

Reproduction or translation of any part of this work beyond that permitted by Sections 107 and 108 of the 1976 United States Copyright Act without the permission of the copyright owner is unlawful. Requests for permission or further information should be addressed to the Permissions Department, John Wiley & Sons, Inc.

ISBN 0-471-10558-9

Printed in the United States of America

10 9 8 7 6 5 4 3 2 1

substances and the average densities of some objects. Note that the density of a gas (see Air in the table) varies considerably with pressure, but the density of a liquid (see Water) does not. That is, gases are readily *compressible* but liquids are not.

Pressure

Let a small pressure-sensing device be suspended inside a fluid-filled vessel, as in Fig. 15-1*a*. The sensor (Fig. 15-1*b*) consists of a piston of area ΔA riding in a close-fitting cylinder and resting against a spring. A readout arrangement allows us to record the amount by which the (calibrated) spring is compressed by the surrounding fluid, thus indicating the magnitude ΔF of the force that acts on the piston. We define the **pressure** exerted by the fluid on the piston as

$$p = \frac{\Delta F}{\Delta A}. \qquad (15\text{-}2)$$

In theory, the pressure at any point in the fluid is the limit of this ratio as the area ΔA of the piston, centered on that point, is made smaller and smaller. However, if the force is uniform over a flat area A, we can write Eq. 15-2 as $p = F/A$. (When we say a force is uniform over an area, we mean that the same force would be measured at every point of the area.)

We find by experiment that at a given point in a fluid at rest, the pressure p defined by Eq. 15-2 has the same value no matter how the pressure sensor is oriented. Pressure is a scalar, having no directional properties. It is true that the force acting on the piston of our pressure sensor is a vector, but Eq. 15-2 involves only the *magnitude* of that force, a scalar quantity.

The SI unit of pressure is the newton per square meter, which is given a special name, the **pascal** (Pa). In metric countries, tire pressure gauges are calibrated in kilopascals. The pascal is related to some other common (non-SI) pressure units as follows:

$$1 \text{ atm} = 1.01 \times 10^5 \text{ Pa} = 760 \text{ torr} = 14.7 \text{ lb/in.}^2.$$

The *atmosphere* (atm) is, as the name suggests, the approximate average pressure of the atmosphere at sea level. The *torr* (named for Evangelista Torricelli, who invented the mercury barometer in 1674) was formerly called the *millimeter of mercury* (mm Hg). The pound per square inch is often abbreviated psi. Table 15-2 shows some pressures.

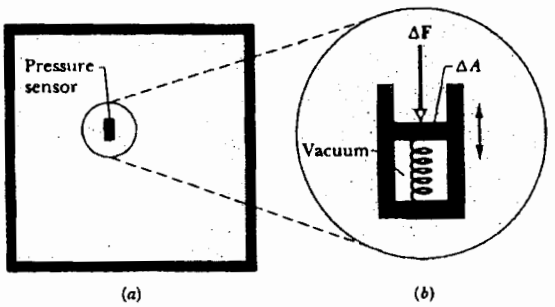

FIGURE 15-1 (*a*) A fluid-filled vessel containing a small pressure sensor, shown in (*b*). The pressure is measured by the relative position of the movable piston in the sensor.

TABLE 15-2 SOME PRESSURES

	PRESSURE (Pa)
Center of the Sun	2×10^{16}
Center of Earth	4×10^{11}
Highest sustained laboratory pressure	1.5×10^{10}
Deepest ocean trench (bottom)	1.1×10^{8}
Spike heels on a dance floor	1×10^{6}
Automobile tire[a]	2×10^{5}
Atmosphere at sea level	1.0×10^{5}
Normal blood pressure[a,b]	1.6×10^{4}
Best laboratory vacuum	10^{-12}

[a] Pressure in excess of atmospheric pressure.

[b] The systolic pressure, corresponding to 120 torr on the physician's pressure gauge.

SAMPLE PROBLEM 15-1

A living room has floor dimensions of 3.5 m and 4.2 m and a height of 2.4 m.

(a) What does the air in the room weigh?

SOLUTION: If V is the volume of the room and ρ is the density of air at 1 atm (see Table 15-1), then the weight W of the air is

$$W = mg = \rho V g$$
$$= (1.21 \text{ kg/m}^3)(3.5 \text{ m} \times 4.2 \text{ m} \times 2.4 \text{ m})(9.8 \text{ m/s}^2)$$
$$= 418 \text{ N} \sim 420 \text{ N}. \qquad \text{(Answer)}$$

This is about 94 lb.

(b) What force does the atmosphere exert on the floor of the room?

SOLUTION: The force is

$$F = pA = (1.0 \text{ atm})\left(\frac{1.01 \times 10^5 \text{ N/m}^2}{1 \text{ atm}}\right)(3.5 \text{ m})(4.2 \text{ m})$$
$$= 1.5 \times 10^6 \text{ N}. \qquad \text{(Answer)}$$

S

IN THE UNITED STATES DISTRICT COURT
FOR THE DISTRICT OF DELAWARE

KYPHON, INC.,
Plaintiff,
vs. Case No. 04-0204-JJF
DISC-O-TECH MEDICAL TECHNOLOGIES, LTD. and DISC ORTHOPAEDIC TECHNOLOGIES, INC.,
Defendants.

VIDEOTAPED DEPOSITION OF WILLIAM S. ROSENBERG, MD, a witness, taken on behalf of the Plaintiff, pursuant to Notice, on the 22nd day of November, 2004, at the offices of Midwest Neurosurgery Associates, P.A., 6420 Prospect, Suite T411, Kansas City, Missouri, before,
TERRI HUSETH, RPR,
of AAA Court Reporting Company, a Registered Professional Reporter, Certified in the states of Missouri and Kansas.

APPEARANCES

For the Plaintiff:
MR. FRANK E. SCHERKENBACH
FISH & RICHARDSON P.C.
225 Franklin Street
Boston, Massachusetts 02110

all human wisdom on that subject.
Q. (By Mr. Scherkenbach) And you personally can't know whether the SKy device is compacting bone marrow to a degree that is less than you would consider to be clinically compacting? I'll put it that way.
A. Based upon my experience in dealing with spinal surgery, and in working in cancellous bone and vertebral bodies in the laboratory, I think it is a very reasonable conclusion that it does not compress bone marrow. I have not done the experiments to verify that.
Q. All right. At the end of paragraph 41, you say -- well, the last sentence, "The SKy device is incapable of achieving substantially the same result as that claimed in Claim 1 of the '404 patent; namely, compacting substantially all of the bone marrow." Do you see that?
A. Yes.
Q. Do you understand Claim 1 of the '404 to require compacting substantially all of the bone marrow?
A. I would need to refer back to Claim 1 of '404. I don't have it memorized.
Q. It's actually right down in paragraph 43 there

if you want to read it to refresh your recollection.
A. It doesn't specify whether it says all or not.
Q. If -- if the claim, in fact, required any amount of compacting of bone marrow to any degree, can you say, as you sit here today, that the SKy device does not compact bone marrow?
MR. VENABLE: Objection.
A. To the best of my clinical knowledge, yes.
Q. (By Mr. Scherkenbach) And again, when you say "clinical knowledge," you're using a definition of compaction that is used by a clinician?
A. No. I am drawing on clinical experience with bone marrow, cancellous bone, spinal surgery and other interventions without having done an experiment to verify that.
Q. Did -- did DOT's lawyers show you any of the pictures of the vertebra after the SKy device has been expanded, deflated and removed?
A. Photographs?
Q. Yes.
A. No.
Q. Do you agree that the SKy device when expanded in a vertebra compacts cancellous bone?

A. No.
Q. At all?
A. I'm not sure about at all but, by and large, I would think not much.
Q. So you think the SKy device doesn't compact any material inside the bone?
A. We are coming up on a definition of compaction, so I'll ask you for yours.
Q. Let me try it this way. You read the '404 patent, right?
A. Yes.
Q. And it uses the word "compact" or "compaction" a number of times, right?
A. Yes.
Q. What's your understanding of the way in which the patent used the word "compact" or "compaction," what definition?
MR. VENABLE: Objection, he's not -- the witness is not a lawyer. You can answer it if you can.
Q. (By Mr. Scherkenbach) If you don't have an opinion, you can tell me, but I'm just asking the question.
A. I frankly don't understand its use in that patent.

Q. You don't understand the patent's use of the word "compaction" or "compact"?
A. That's correct.
Q. Why not?
MR. VENABLE: Objection.
Q. (By Mr. Scherkenbach) I mean, is there something about the way the patent uses those words that strikes you as, I don't know, odd or wrong?
A. Yes. I don't see how bone marrow is compacted in the way that we would use that word for other substances such as cancellous bone.
Q. If the definition of bone marrow included cancellous bone, though, referring to it as being compacted, as the patent does, would make sense, wouldn't it?
MR. VENABLE: Objection, the patent does not refer. Just want to make sure the question is clear here.
MR. SCHERKENBACH: We can read the question back. I'm happy with the question.
MR. VENABLE: Okay.
MR. SCHERKENBACH: Could you read it back, please.
(The requested portion of the record

Page 58

was read by the reporter.)
A. I'm sorry. I need you to rephrase that.
Q. (By Mr. Scherkenbach) The patent refers to compacting bone marrow, right?
A. Yes, it does.
Q. If the definition of bone marrow included cancellous bone, then the patents referring to compacting bone marrow would make sense to you, right?
MR. VENABLE: Objection, it's purely speculative.
Q. (By Mr. Scherkenbach) I understand you don't agree with the definition of bone marrow. I'm asking you to use a different definition which includes cancellous bone. Are you with me?
A. So you want me to use bone marrow as a surrogate for cancellous bone?
Q. Well, not necessarily as a surrogate, as a term that includes maybe among other things cancellous bone. Okay? You don't have to agree with it. I just want you to understand what I'm asking you.
A. Frankly, it seems like word games to me. I don't understand that. Bone marrow cannot be compacted. It's cellular and it flows.

Page 59

Q. This gets back to the liquid point. To the extent it behaves like a liquid, you can't compact it, in your opinion?
A. Correct.
Q. But if the definition of bone marrow were to include cancellous bone, isn't it fair to say that the patent's references to compacting bone marrow would make sense to you as a spine surgeon?
A. I don't know how -- I don't know how to answer that for you because it's so far from what reality is that it's -- it seems so speculative.
Q. Again, I appreciate you don't agree with the definition of bone marrow that includes cancellous bone, right, you don't agree with that?
A. That's correct.
Q. And you make that clear in your declaration, right?
A. Correct.
Q. I'm asking you to assume, because you're an expert, assume the definition of bone marrow does include cancellous bone. Okay? Even though you disagree, I want you to make that

Page 60

assumption. All right?
A. Okay.
Q. If you make that assumption, isn't it fair to say that the patent's references to compacting bone marrow, in fact, would make sense to someone of skill in the art like yourself?
MR. VENABLE: Objection.
A. I suppose that it would make sense for that portion of whatever definition you're using that is really talking about the cancellous bone.
Q. (By Mr. Scherkenbach) All right.
A. But the other portion of this conjectured definition would not make sense.
Q. Namely, the portion of bone marrow that would include liquid, for example?
A. Well, what we in medicine call the bone marrow.
Q. All right. I take it it would surprise you if you saw definitions of bone marrow in -- from medical sources or from colleagues of yours that include cancellous bone?
A. Very little surprises me in medicine.
Q. All right. So it's possible those definitions exist, you're just not aware of them?
A. People can come up with all kinds of personal

Page 61

definitions.
Q. All right. Did you -- you read Dr. Lane's declaration, did you?
A. I skimmed it.
Q. Okay. Did you read his deposition?
A. I do not believe I saw his deposition.
Q. Did you know that he had been deposed in this case?
A. I don't -- I don't think I knew that.
Q. All right. Let's go on to validity, which is toward the end of your report, round about paragraph 48, if you just want to familiarize yourself. Okay.
First of all, is it correct that you are only opining that the patent is invalid if the term "bone marrow" includes cancellous bone?
A. No. I'm not a lawyer and I can't comment on the totality of the patent. I just -- my statement here is that if the term "bone marrow" includes cancellous bone, this patent is invalid. As far as other possible items that might make it invalid, I have no idea.
Q. All right. Well, it's fair to say, isn't it, that if you're right about the definition of bone marrow, you have not offered an opinion in

T

United States Patent [19]

Lee et al.

[11] **Patent Number: 4,488,549**

[45] **Date of Patent: Dec. 18, 1984**

[54] **PRESSURIZATION OF CEMENT IN BONES**

[75] Inventors: **Alan J. C. Lee; Robin S. M. Ling,** both of Exeter, England

[73] Assignee: **University of Exeter,** Devon, England

[21] Appl. No.: **408,815**

[22] Filed: **Aug. 17, 1982**

[51] Int. Cl.³ **A61F 1/00; A61B 17/36**

[52] U.S. Cl. ..... **128/303 R;** 128/92 C; 3/1; 3/1.9

[58] Field of Search ..... 128/92 C, 92 CA, 92 R, 128/92 G, 303 R; 3/1, 1.9, 1.91

[56] **References Cited**

U.S. PATENT DOCUMENTS

4,274,163 6/1981 Malcom et al. 3/1.91
4,338,925 7/1982 Miller ..... 128/92 E
4,399,814 8/1983 Pratt, Jr. et al. ..... 128/92 C

Primary Examiner—Richard J. Apley
Assistant Examiner—David J. Isabella
Attorney, Agent, or Firm—Larson and Taylor

[57] **ABSTRACT**

A seal member for fitting over and sealing the opening of a cavity in a bone to allow pressurization of cement in the cavity has an aperture for sealingly receiving a cement delivery nozzle. The seal member may be a balloon seal, which may be inflatable and expandable, or a solid body of conformable material. In use, the seal member is urged against the opening, e.g. by force applied by the barrel of a cement delivery gun on an abutment means having an apertured pressure piece shaped to urge the seal member against the mouth of the opening.

12 Claims, 11 Drawing Figures

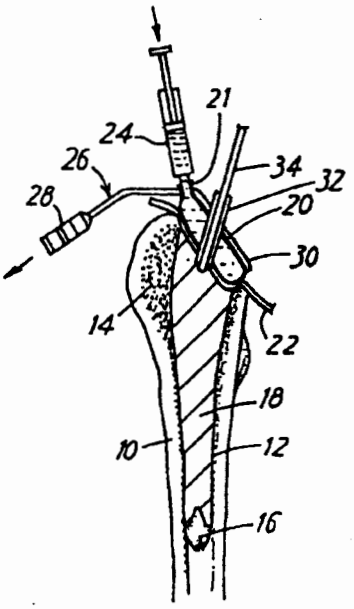

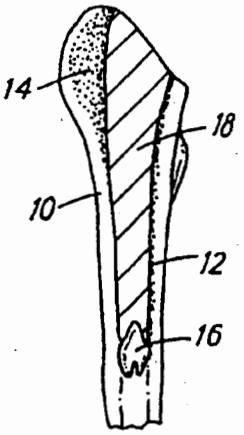

FIG. 1

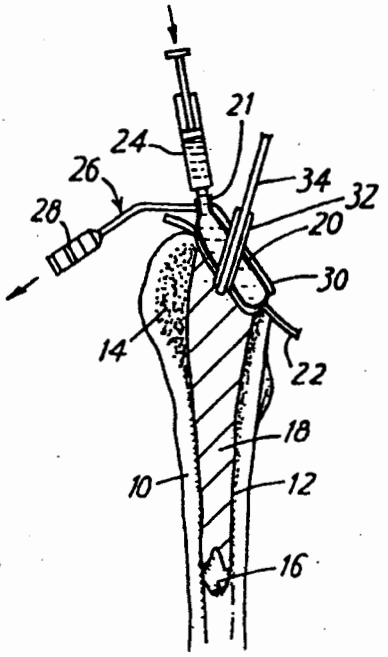

FIG. 2

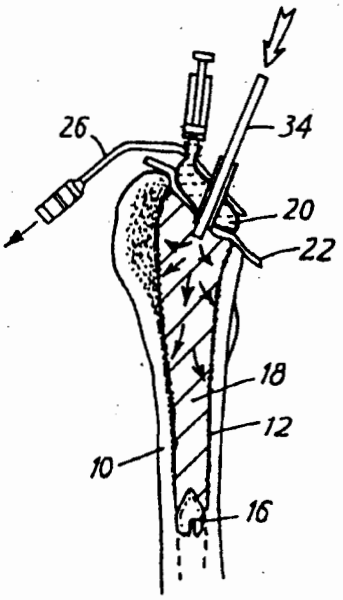

FIG. 3

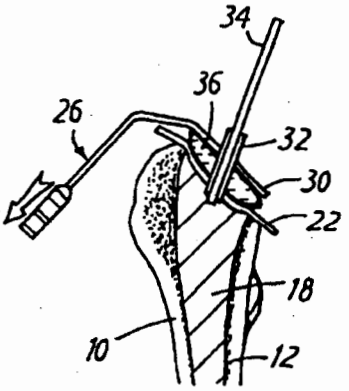

FIG. 4

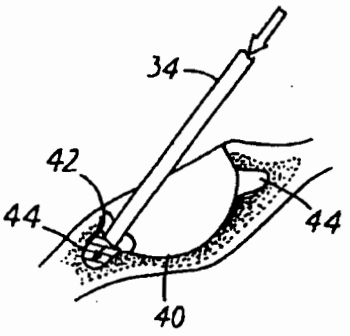

FIG. 5

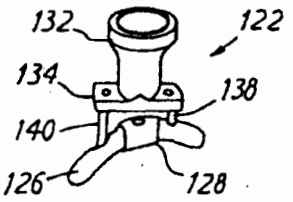

FIG. 7

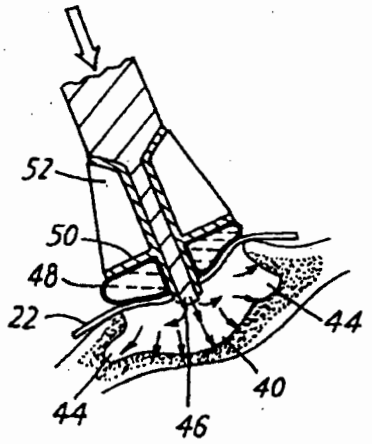

FIG. 6

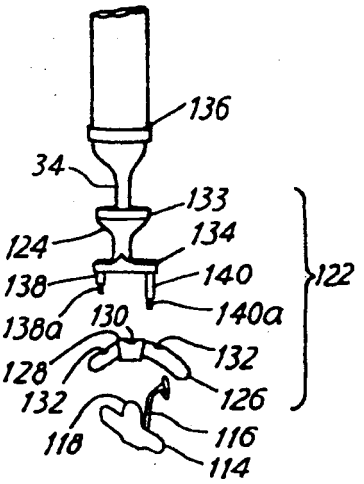

FIG. 8

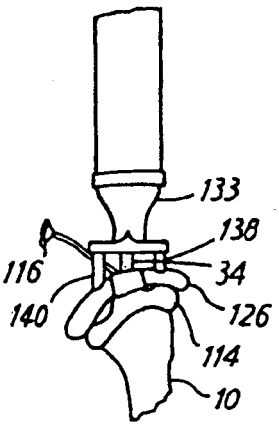

FIG. 9



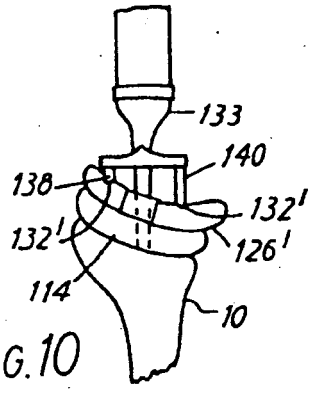

FIG. 10

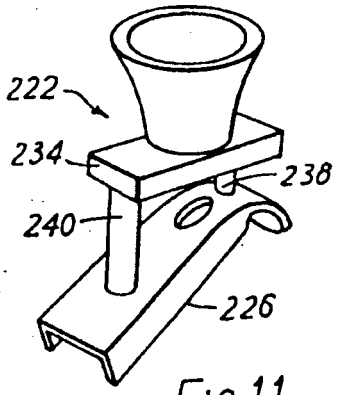

FIG 11

PRESSURIZATION OF CEMENT IN BONES

BACKGROUND OF THE INVENTION

This invention relates to surgery in which an implant is fixed in a bone by the use of bone cement, e.g. polymethylmethacrylate bone cement.

It has been well established by laboratory experiments and clinical experience that the fixation of implants such as the components of replacement joint protheses by selfcuring polymethylmethacrylate bone cement is enhanced if the bone cement is put under pressure before the implant is inserted. The pressurisation has two principal effects: (a) it improves the quality and strength of the bone cement material, and (b) it improves the strength of the interlock between the cement and the bone into which the cement is placed, since the cement is thus encouraged to penetrate into the interstices of the bone structure. Both these effects are desirable.

A number of devices are available which attempt to carry out such cement pressurisation. A typical device is that developed by the present inventors and shown in U.K. Pat. No. 1,430,083. This specification describes an inflatable seal, and its method of use is as follows. Firstly, the cavity in the bone into which the cement is to be placed is formed by the surgeon. The cavity should be open at one part only, and the medullary canal, for example, will need to be sealed at its distal end by a suitable plug before insertion of the cement. Such a plug is the subject of U.K. Patent Specification No. 2,054,383. Once the cavity in the bone is completed, bone cement is introduced into the cavity either by hand or by using a cement syringe or gun similar to that described in U.K. Patent Specification No. 1,603,102. After withdrawal of the syringe or gun, pressurisation may now take place by forming a seal over the bone cement, completely enclosing the opening of the bone cavity, using the inflatable pressuriser device of U.K. Pat. No. 1,430,083. The pressuriser is then forced manually down onto the surface of the cement, causing the total volume of the closed cavity to be descreased. The cement, being virtually incompressible, is put under pressure and forced to flow into the pores of the bone itself. (These bony pores are often the trabecula bone.) Thus, this procedure involves two steps: firstly the bone cavity is filled with cement, and secondly a pressuriser device is applied to decrease the total volume of the closed cavity.

SUMMARY OF THE INVENTION

The present invention seeks to provide a device enabling an improved procedure.

According to the present invention there is provided apparatus for use in pressurisation of cement in a cavity in a bone, comprising a seal member for fitting over and sealing the opening of the cavity, characterised in that the seal member has an aperture therethrough arranged to receive sealingly a nozzle for the delivery of cement. This facilitates a surgical procedure in which pressurisation of cement in the cavity is achieved not so much by a reduction in volume in the cavity, but rather by introduction of further cement through the aperture in the seal while the seal is held in sealing relationship over the opening of the cavity.

The apparatus may further include abutment means comprising a member adapted to overlie the seal member, the abutment member having an aperture therethrough arranged to receive said delivery nozzle, said abutment means being urgeable to urge said seal member to seal the bone cavity opening. Preferably said urging of the abutment means is effectable by a dispensing means such as a gun or syringe which provides said delivery nozzle.

Such abutment means may enable the seal member to be maintained sealingly against the bone cavity opening by force applied to the cement gun or syringe barrel without the need for an additional operator.

In further aspects the invention provides: abutment means; a cement gun (or syringe) assembly including such abutment means; and a cavity-filling assembly comprising such a gun/syringe assembly and a seal member. The seal member and the abutment means may be mutually adapted to each other and to the bone cavity opening (or to an expected range of types of bone cavity opening).

The seal may be a flexible, liquid-containing bag or ballon so as to facilitate achieving a sealing relationship over the irregular surface of the opening of bone cavity. The seal may be inflatable with the liquid, or it may be permanently filled with the liquid. More preferably the seal member comprises a substantially solid body. A suitable material is viscoelastic, conformable polymeric material. Of course, whatever form the seal member member takes, it must be (at least externally) of surgically acceptable material(s).

BRIEF DESCRIPTION OF THE DRAWINGS

Preferred embodiments of the invention will now be described in connection with two surgical procedures, with reference to the accompanying drawings, wherein:

FIGS. 1 to 3 are diagrammatic cross-sections through the upper end of a human femur, showing successive stages of pressurisation of bone cement within a medullary cavity,

FIG. 4 is a view corresponding to FIG. 2 but showing a second embodiment of the invention;

FIGS. 5 and 6 are diagrammatic cross-sections of a human acetabulum showing successive stages of pressurisation of bone cement in a cavity formed therein;

FIG. 7 is a perspective view of abutment means for use in a further embodiment of the invention;

FIGS. 8 and 9 show a filling assembly including the abutment means shown in FIG. 7, FIG. 2 being an exploded view and FIG. 3 showing the parts assembled for use; and

FIGS. 10 and 11 are similar to FIG. 9 but showing further forms of abutment means.

DESCRIPTION OF THE PREFERRED EMBODIMENTS

Referring to the first procedure for pressurising cement in a medullary cavity in a femur, FIG. 1 shows the upper end of a femur 10, the medullary canal 12 of which has been reamed out to receive the stem of an implant such as a prosthetic hip device. It will be appreciated that the cavity thus formed is lined by cancellous bone 14. A plug 16 is inserted to seal the distal end of the medullary cavity. This plug is suitably as described in our U.K. Specification No. 2054383. The cavity is then filled with polymethylmethacrylate bone cement 18, using the syringe or gun described in our British Pat. No. 1603102.

In order to increase the cement's strength and cause its intrusion into the pores of the cancellous bone, the

cement 18 is now pressurised as follows. Referring to FIG. 2, a flexible ballon seal 20 is placed over the open end of the medullary cavity 12, with an intermediate rubber sheet 22. The purpose of the rubber sheet is to facilitate subsequent removal of the seal, since the rubber sheet will have less tendency to stick to the cement 18. The balloon 20 is made from an extensible material such as rubber, and is generally in the form of a flat cylinder. It is provided with an opening 21, and it is now filled with water or another medically inert liquid through this opening, by means of a syringe 24. This causes the seal 20 to inflate, and it can be pulled onto the bone around the opening of the medullary cavity by an assistant surgeon who pulls it down using an instrument 26. The instrument 26 has a pulling handle 28 and a flat plate 30 which bears on the seal 20, This gives a certain amount of pressure to the liquid inside the seal 20, causing it to seat firmly (through the rubber sheet 22) onto the bone all the way round the opening to the medullary cavity 12. It will also give a degree of pressurisation to the cement 18.

The balloon seal 20 is annular in form, having an aperture defined by a sleeve 32 passing through a central region thereof. This sleeve can be at an angle with respect to the seal, as shown in FIG. 2, in order to conform to the preferred direction of working. However, since the seal is flexible this is not too critical. The sleeve 32 receives the delivery nozzle 34 of the cement gun, and is flexible, so that when the seal 20 is inflated with liquid and pressure is applied to it by means of the instrument 26, a seal is also formed around the nozzle 34. The cement gun may be the same cement gun as used above. The rubber sheet 22 and the plate 30 of the instrument 26 are also provided with suitable central apertures to accommodate the nozzle 34.

Now that the inflated seal 20 is forming a seal both around the cut bone around the top of the medullary cavity 12, and around the nozzle of the gun 34, further cement is injected into the cavity 12 as indicated by the arrows in FIG. 3. Because of the seal formed at the end of the medullary cavity 12, this causes pressurisation of the cement 18, causing further intrusion into the pores of the cancellous bone, and giving the necessary strength to the cement when it cures. The nozzle 34 of the cement gun, the instrument 26, the balloon seal 20 and the rubber sheet 22 can now be removed, the desired implant can be placed in the cement in the medullary canal, and the cement allowed to cure.

FIG. 4 shows an alternative kind of seal 36. In place of the inflatable balloon seal 20, the seal 36 is a floppy, closed bag containing a fixed amount of a liquid such as water. Thus, instead of being made from an expandable rubber like material which is inflated by injecting liquid into it, the material from which the bag is made is not extensible. As before, the bag is flexible so that it can form itself over non-uniform shapes such as the cut bone at the open end of the medullary cavity 12, and it has the same general shape as before, but its total volume is constant. Its method of use is exactly the same as previously, and so will not be described further.

As a further alternative, the seal could be a substantially solid member of conformable polymer. This is at present preferred.

FIGS. 5 and 6 show a method of pressurizing cement in a cavity surgically formed in the human acetabulum. This is the other half of an operation to give a total replacement hip joint to a patient, since into such a cavity in the acetabulum is placed an artificial acetabular cup with which a ball on the implant placed in the femur co-operates to form a ball and socket joint.

The method uses the same principle as that described above, namely (a) the formation of a closed cavity in a bone by the surgeon, (b) the introduction of cement into the cavity, (c) closing the cavity with a sealing instrument, and (d) injecting more cement into the closed space.

In detail, the procedure is as follows. Referring to FIG. 5, the cavity 40 in the acetabulum is prepared together with three fixation pits 44 extending therefrom, in the illium, the ischium and in the pubic ramus. Each of these pits is cleaned and separately injected with bone cement from a cement gun through a nozzle 34 thereof, the end of which is fitted with a small annular seal 42. Some pressurisation to the cement in the fixation pits 44 is possible at this stage by forcing cement through the nozzle 34 while pressing down to hold the flexible seal 42 against the opening of the fixation pit. The main bolus of cement is now introduced into the cleaned acetabular cavity 40. Referring to FIG. 6, a rubber sheet 22 is now applied as previously over the end of the filled cavity, the sheet 22 having an opening in the central region thereof to accommodate a nozzle 46 of a cement gun. The nozzle 46 is fitted with an annular floppy bag seal 48 similar to that described in FIG. 4, and with a pressure flange 50 (of course one of the other types of seal could be used.) As seen in FIG. 6, the seal 48 is sandwiched between the pressure flange 50 and the rubber sheet over the opening of the cavity 40. The nozzle of the cement gun is also provided with an annular distance piece 52 of metal or plastics material, and this serves to transmit the manual pressure applied by the surgeon through the cement gun, onto the floppy bag seal 48 to cause it to give a good seal around the edges of the cavity 40. Cement is then injected by the cement gun through the nozzle 46, to pressurise the cement already in the cavity 40 and the fixation pits 44, causing intrusion of cement into the cancellous bone and giving strength in the cement when cured, as previously. The nozzle 46, the seal 48 and the rubber sheet 42 are now removed, and the prosthetic acetabular cup can be inserted in the cement in the usual manner.

FIGS. 7 to 10 deal with a slightly modified procedure which does away with the need for a separate pressurising instrument 26 to be operated by an assistant. It is shown in its application to pressurising cement into the medullary canal of a femur 10. The opening of the canal 12 is elongate, and so the seal member 114 is elongate and, sausage-shaped. The illustrated seal member is a balloon seal, i.e. a liquid-containing flexible bag, with means 116 for charging or discharging liquid. It has a central aperture defined by a sleeve 118 for receiving sealingly the nozzle 34 of a cement gun. (It is generally as described above in connection with FIGS. 1 to 3.)

An abutment means 122 of FIGS. 7 to 9 consists of a distance piece 124 and an abutment member or pressure piece 126. The pressure piece 126 has an asymmetrical banana shape. It is generally of constant round cross-section. In this embodiment there is a wider, collar portion 128 at an intermediate region. This is penetrated by an aperture 130 for receiving the nozzle 34. Each of the two arms of the banana shape has a blind bore 132 facing upward and parallel with the aperture 130.

The distance piece 124 has an upper funnel portion 133 and a lower bridge portion 134. The funnel portion fits over the end of the barrel 136 of a cement gun. The

nozzle 34 passes through the funnel portion 132 and through an aperture in the bridge portion 134. The bridge portion 134 is laterally elongate, and has a downwardly extending leg 138, 140 at each side portion. The two legs are of unequal length. Each has a lower portion 138a, 140a of reduced diameter, adapted to be received snugly in a respective blind bore 132 in the pressure piece.

In use, as shown in FIG. 9 the cement gun is pressed with its barrel end 136 abutting within the funnel portion 132 of the distance piece. The thrust is transmitted, via the legs 138, 140 engaging in the bores 132, to the pressure piece 126. This is shaped so as to urge the seal member 114 against the canal opening 12. (Note how the combination of the unequal legs 138, 140 and the unsymmetrical banana shape of the pressure piece matches the member 114 to the canal opening 12.) The nozzle 34 of the cement gun extends into the medullary cavity, so that cement can be pumped in.

If the illustrated type of fillable seal member 114 is used, it is filled with liquid (e.g. sterilised water) before the cement is pressurised, as described above with reference to FIGS. 1 to 3. If on the other hand a solid seal is used, it is forced down onto the femur by the pressure piece 126, and deforms to the shape of the bone. (Its intrinsic shape may be subtantially identical to that of the member 114 as seen in FIG. 8.)

The person skilled in the art will be able to select a suitable material for making a solid seal on the basis of the information already given. By way of example, we would mention the plastics materials known by the trade names of Sorbothane and Sarathon, both produced by Professor M. Hiles, University of Akron, U.S.A. The former has been suggested for lining shoes, to take shock loads, but the latter is perhaps preferable for present purposes. A solid seal (with an aperture defined by a sleeve 118) can be made in such a material. It may be re-usable, but on grounds of hygiene it is preferable to use a new seal for each operation. This is of course much more practicable (in terms of cost) than when using a balloon seal.

Both materials are viscoelastically conformable. That is, they are resiliently deformable rather like rubber, but the deformation properties vary with the nature of the deforming force.

It may be convenient to use the pressure piece either as shown in FIGS. 7 to 9, or the other way round as shown in FIG. 10. The apparatus shown here differs only in that the pressure piece 126' has through-holes 132' and not blind bores. These holes 132' serve to seat the legs 138, 140 in either orientation of the pressure piece 126'.

FIG. 11 shows a modified abutment means 222, which differs from that of FIGS. 7 to 9 primarily in the form of the pressure piece 226. This is a shaped piece of sheet metal, rigidly attached to the legs 238, 240 of the bridge portion 234. It has a substantially straight channel-section portion, and a downwardly curving portion at one side. It is for use with a femoral seal of solid conformable polymer.

The preceding description and FIGS. 7 to 10 refer to the medullary canal of a femur. Of course the apparatus is applicable to many other situations, e.g. in filling an acetabular cavity. Different types of cavity may call for differently shaped seal members 114, and these in turn may call for differently shaped pressure pieces 126.

For example, in filling an acetabular cavity we may use a thick disc or doughnut-shaped seal member 114 made of a solid viscoelastic conformable material as described above. An appropriately configured pressure piece will be used.

Even when considering a single type of bone, e.g. the femur, there is considerable variation in form. It may be possibe to produce a pressure piece whose curvature and form make it usable with (e.g.) virtually all human femurs. Alternatively, the availability of a range of pressure pieces, and/or the reversibility described with reference to FIG. 10, may be desirable.

While the invention has been illustrated above with reference to the preferred embodiments, it will be understood by those skilled in the art that various changes may be made without departing from the spirit and scope of the invention, and it is intended to cover all such changes and modifications by the appended claims.

We claim:

1. Apparatus for use in pressurization of cement in a cavity in a bone, said apparatus comprising a seal member for fitting over and sealing the opening of the cavity, said seal member being deformable and having an upper and lower substantially planar surfaces and further including a transverse aperture for sealingly receiving a cement delivery nozzle extending through a central region thereof, said seal member being dimensioned and arranged so as to be urgeable transversely, with a said nozzle extending through said aperture in sealing relationship with the portions of said seal member defining the aperture, with deformation of the seal member, said lower planar surface disposed in substantially coplanar relationship with the surfaces of the bone defining the opening of the cavity so as not to invade the cavity and to extend beyond the edges the opening of the cavity to contact the surfaces of the bone defining the cavity to provide sealing around the cavity, said seal member further providing sealing directly around the delivery nozzle, whereby cement under pressure can be passed through the nozzle into the sealed cavity and provide complete filling of the cavity.

2. Apparatus according to claim 1 wherein the seal member comprises a flexible, liquid-containing bag deformable to facilitate sealing at an irregularly-shaped cavity opening.

3. Apparatus according to claim 2 wherein the bag has means for inflation with liquid.

4. Apparatus according to claim 3 wherein the bag is resiliently extendible by inflation.

5. Apparatus according to claim 1 wherein the seal member comprises a substantially solid body.

6. Apparatus according to claim 1 further including abutment means adapted to overlie the seal member and having an aperture therethrough arranged to receive said delivery nozzle; said abutment means having means for urging it to urge said seal member against said bone cavity opening.

7. Apparatus according to claim 6 wherein in use, said delivery nozzle is provided by a dispensing means and wherein said urging means is an abutment surface of the abutment means arranged to be abuttable against by a said dispensing means.

8. Apparatus according to claim 7 wherein said abutment means comprises an apertured pressure piece shaped to urge the seal member against the cavity opening.

9. Apparatus according to claim 8 wherein said pressure piece is substantially banana-shaped.

10. Apparatus according to claim 8 wherein the abutment surface is provided by an abutment assembly comprising an apertured bridge piece arranged to contact the pressure piece on either side of its aperture, and a receiving portion adapted to receive an end portion of said dispensing means.

11. Apparatus according to claim 5 wherein said substantially solid body is of a viscoelastically conformable material.

12. A method of pressurizing cement in a cavity in a bone in a surgical procedure, said method comprising the steps of:

placing a seal member over the bone around the open end of the cavity in substantially co-planar relationship with the surfaces of the bone defining the cavity opening so as not to invade the cavity, said seal member having an aperture therethrough and being of a size such that the seal member extends beyond the edges of cavity and contacts the surfaces of the bone defining the cavity;

causing a cement delivering nozzle to extend sealingly through said aperture; and

passing cement through said nozzle into the cavity while urging said seal member to seal said cavity, so as to completely fill said cavity including the uppermost portion of the cavity adjacent to the cavity opening.

* * * * *

U

UNITED STATES DISTRICT COURT
FOR THE DISTRICT OF DELAWARE

KYPHON, INC.,

Plaintiff,

DISC-O-TECH MEDICAL TECHNOLOGIES LTD., and DISC ORTHOPAEDIC TECHNOLOGIES, INC.,

Defendants.

CA 04-0204-JJF

DEPOSITION OF JOHN C. EISENHART
New York, New York
Thursday, March 17, 2005

Reported by:
MERCEDES MARNEY, RPR
JOB NO. 171222

are different opinions on different patents. They say what they say. If you would like to talk about specific language.

BY MR. SCHERKENBACH:

Q Well, we already looked at specific language in the 404 where you talked about the definitions of cancellous bone and bone marrow, right?

A We did talk about that.

Q Okay. And you conclude that the, for the 404, that the SKy bone expander does not compact or compress bone marrow, right?

MS. CHOW: Objection to form. Lack of foundation. Please identify precisely where you are referring to in the opinion.

BY MR. SCHERKENBACH:

Q We can look at it again. We already did, but feel free.

A The claim construction, I'm working from the 404 patent, which is Exhibit 188, the paragraph bridging pages 10 and 11 is the ultimate conclusion, thus the claim of compacting the bone marrow to increase the volume of said passage, read in light of the

specification, does not refer to literally compressing or compacting the bone marrow. Instead, it appears to refer to a process of moving the bone marrow away from the center of the interior bone volume and towards the side walls of the bone.

That was my claim construction. Do you have a question about that?

Q Yes. The question is the same, which is why, when you are talking about cancellous bone, in this opinion, not right where you quoted, but in this opinion, you talked about cancellous bone versus bone marrow, why you wouldn't discuss the effect of the SKy bone expander on cancellous bone?

MS. CHOW: Objection to form. Lack of foundation.

THE WITNESS: In reviewing the -- I'm sorry. Did you --

MS. CHOW: I was asking for the specific part of the opinion which he's referring to, but please answer.

THE WITNESS: In reviewing the prosecution history of these two patents, it becomes pretty clear that both the

attorney who wrote these claims and the examiner at the patent office who was reviewing the patent application, were using the claim term, bone marrow, to refer to both cancellous bone and bone marrow, and that's, in my opinion, an error on both their parts, but you do have to construe the claim terms in light of that prosecution history. And in so doing, this was my ultimate claim construction conclusion for that portion of the claim.

BY MR. SCHERKENBACH:

Q So you think the examiner made a mistake in considering bone marrow to include cancellous bone?

MS. CHOW: Objection to form.

THE WITNESS: I don't believe that I said that the examiner made a mistake, but I do believe that they probably were using these terms in a sloppy manner.

BY MR. SCHERKENBACH:

Q So if the attorney that wrote the patent and the examiner both thought that bone marrow could include cancellous bone, why does

that not suggest that the claim construction of bone marrow should include cancellous bone?

MS. CHOW: Objection to form. Lack of foundation. Can you reread the question?

(Testimony read back.)

MS. CHOW: Objection to the form to the extent it mischaracterizes.

THE WITNESS: I honestly have no idea what you are asking me. Perhaps you can break it down.

BY MR. SCHERKENBACH:

Q Well, the prosecution history is an important part of claim construction, right?

A Yes, it is.

Q And you seem to agree that the examiner, during the prosecution history and the prosecuting attorney, both, included cancellous bone within the sort of broad definition of bone marrow, right?

MS. CHOW: Objection to the form.

THE WITNESS: I don't know what they did, but I was doing my best to construe this claim term.

BY MR. SCHERKENBACH:

V

Second College Edition

The American Heritage Dictionary

Words that are believed to be registered trademarks have been checked with authoritative sources. No investigation has been made of common-law trademark rights in any word, because such investigation is impracticable. Words that are known to have current registrations are shown with an initial capital and are also identified as trademarks. The inclusion of any word in this Dictionary is not, however, an expression of the Publisher's opinion as to whether or not it is subject to proprietary rights. Indeed, no definition in this Dictionary is to be regarded as affecting the validity of any trademark.

Copyright © 1982, 1985 by Houghton Mifflin Company. All rights reserved.

No part of this work may be reproduced or transmitted in any form or by any means, electronic or mechanical, including photocopying and recording, or by any information storage or retrieval system without the prior written permission of Houghton Mifflin Company unless such copying is expressly permitted by federal copyright law. Address inquiries to Permissions, Houghton Mifflin Company, 2 Park Street, Boston, MA 02108.

Library of Congress Cataloging in Publication Data
Main entry under title:
American Heritage dictionary.
Rev. ed. of: American Heritage dictionary of the English language. New college ed. c1976.
1. English language—Dictionaries. I. Morris, William, 1913–
PE1625.A54 1982 423 82-9346
ISBN 0-395-32943-4
ISBN 0-395-32944-2 (thumb index)
ISBN 0-395-33959-6 (deluxe edition)

Manufactured in the United States of America

Case 1:04-cv-00204-JJF Document 169-2 Filed 04/14/2005 Page 27 of 50

[bolē, ray + -METER.]

slogna.
consisting of a piece of
ıar or clasp. [Alteration

l. -viks or -vi-ki (-vē'kē).
Revolution belonging to
Union. b. A member of
Russian Social Demo-
s on party organization
me radical. [R. Bol'she-
e.]
bŏl'shə-viz'əm, bōl'-) n.
olsheviks between 1903
power and establishing
2. Soviet Communism.
hə-vist, bōl'-) n. A Bol-

ow pillow or cushion.
To support or prop up
buoy up: visitors that
ol'ster-er n.
od or metal that slides
doors and gates. 2. A
of a lock that is thrown
A fastener consisting of
one end, designed to be
parts and secured by a
ation of torque. 4. a. A
e cartridge in breech-
d ejects the spent car-
reech mechanism. 5. A
used esp. with a cross-
erbolt. 7. A sudden or
ement toward or away
oth of a definite length,
bolt-ed, bolt-ing, bolts.
s if with a bolt. 2. Ar-
row or other missile).
oth, for example) on a
le chewing; gulp. 5. To
political party). 6. To
1. To move or spring
control and run away.
run away: bolted from
political party or its
e seeds prematurely.
en, often shocking sur-

ite. To pass through a
er, of Germanic orig.]
to bolting. 2. One who
support from a politi-

ed for sifting, esp. for
bolter.
veral North American
daisylike flowers with
at., genus name after

ato the outer edge of a

small round mass.
soft mass of chewed
< Gk. bōlos, lump of

upon detonated by im-
mechanism, or other
bomb. 2. Any of var-
structive material such
long forward pass de-
single play. 4. a. A
igh internal pressure
l gas. c. A portable,
cts a spray, foam, or
al failure or complete
ge amount of money.
ed, bomb-ing, bombs.
y with or as if with
Slang. To fail miser-
Ital. bomba, prob. <
bombos.]
n of cannon that fired
ed, -bard-ing, -bards.
missiles. 2. To attack
irradiate (an atom)
)Fr. bombarde < Med
booming sound < Gk.
d'ment n.
member of an aircraft
pment. 2. A noncom-
soldier who operated
mbard.]
beetles of the genus

ī pit / ī ple / îr pier /
o͝o / ō͞o took / ō͞o boot /

Brachinus and related genera that expel an acrid secretion from the posterior end of the abdomen.

bom·bar·don (bŏm'bär-dŏn', bŏm-bär'dn) *n.* **1.** A brass musical instrument resembling a tuba but with a lower pitch; a bass or contrabass tuba. **2.** A 16-foot reed stop on the organ. [Fr. < Ital. *bombardone*, aug. of *bombardo*, alteration of *bombarda*, bombard < Med. Lat.]

bom·bast (bŏm'băst') *n.* Grandiloquent and pompous speech or writing. [OFr. *bombace*, cotton padding < LLat. *bombax*, cotton < Lat. *bombyx*, silk < Gk. *bombux*, silkworm.] —**bom'bast'er** *n.* —**bom·bas'tic** (-băs'tĭk) *adj.* —**bom·bas'ti·cal·ly** *adv.*

Synonyms: *bombast, declamation, rant, fustian, claptrap, rodomontade.* All these terms designate speech or writing that emphasizes extravagance of style or delivery, usually at the expense of content. *Bombast*, applicable to speech and writing, stresses inflation of style without ruling out the possibility of substantial content. *Declamation* applies principally to formal oratory and the speaking of verse drama but may imply clamorous, empty display. *Rant*, said chiefly of speech, emphasizes turgidity and style of writing or speech and absurd or commonplace content. *Claptrap* is insincere, worthless speech or writing, calculated to win applause. *Rodomontade* is boastful speech and bluster.

Bom·bay duck (bŏm-bā') *n.* **1.** A food fish, *Harpodon nehereus*, of India. **2.** The dried flesh of the Bombay duck or a dish prepared from it.

bom·ba·zine (bŏm'bə-zēn') *n.* A fine twilled fabric of silk and worsted or cotton, often dyed black and used for mourning clothes. [Fr. *bombasin* < LLat. *bombacinum*, silken texture < Lat. *bombycinum* < *bombyx*, silk < Gk. *bombux*, silkworm.]

bomb bay *n.* The compartment in the fuselage of a military aircraft from which bombs are dropped.

bombe (bŏm, bŏnb) *n.* A dessert consisting of two or more layers of ice cream of different flavors frozen in a round or melon-shaped mold. [Fr.]

bombed (bŏmd) *adj. Slang.* Drunk.

bomb·er (bŏm'ər) *n.* **1.** A military aircraft designed to carry and drop bombs. **2.** One that bombs.

bomb-proof (bŏm'prōōf') *adj.* Designed and constructed to resist destruction by bombs.

bomb-shell (bŏm'shĕl') *n.* **1.** A bomb. **2.** A shocking surprise.

bomb-sight (bŏm'sīt') *n.* A device in aircraft for aiming bombs.

bom·by·cid (bŏm'bĭ-sĭd) *n.* A moth of the family Bombycidae, which includes the silkworms. [< NLat. *Bombycidae*, family name < Lat. *bombyx*, silkworm < Gk. *bombux*.]

bo·na fide (bō'nə fīd', fī'dē, bō'nə) *adj.* **1.** Done or made in good faith; sincere: *a bona fide offer.* **2.** Authentic; genuine: *a bona fide Rembrandt.* [Lat., in good faith.]

bo·nan·za (bə-năn'zə) *n.* **1.** A rich mine, vein, or pocket of ore. **2.** A source of great wealth or prosperity. [Sp., exaggerated good, aug. of *bueno*, good < Lat. *bonus*.]

Bo·na·part·ist (bō'nə-pär'tĭst) *n.* A follower or supporter of Napoleon Bonaparte and his policies and dynastic claims or of the Bonaparte family. —**Bo'na·part'ism** *n.*

bon·bon (bŏn'bŏn') *n.* A candy that often has a center of fondant, fruit, or nuts and is coated with chocolate or fondant. [Fr., redup. of *bon*, good < Lat. *bonus*.]

bon·bon·nière (bŏn'bŏn-yâr') *n.* **1.** A small ornate box or dish for candy. **2.** A confectioner's store. [Fr. < *bonbon*, bonbon.]

bond (bŏnd) *n.* **1.** Something that binds, ties, or fastens together, as a fetter, cord, or band. **2.** Often **bonds.** *Archaic.* Captivity; confinement. **3.** A uniting force or tie; link: *bonds of friendship.* **4.** A binding agreement; covenant. **5.** A duty, promise, or obligation by which one is bound. **6.** a. A substance or an agent that causes two or more objects or parts to cohere. b. The union or cohesion brought about by such a substance or agent. **7.** A chemical bond. **8.** *Law.* a. A written and sealed obligation, esp. one requiring payment of a stipulated amount of money on or before a given day. b. A sum of money paid as bail or surety. c. One who acts as bail; bondsman. **9.** A certificate of debt issued by a government or corporation guaranteeing payment of the original investment plus interest by a specified future date. **10.** The condition of storing taxable goods in a warehouse until the taxes or duties due on them are paid. **11.** An insurance contract in which an agency guarantees payment to an employer in the event of unforeseen financial loss through the actions of an employee. **12.** An overlapping arrangement of bricks or other masonry components in a wall. **13.** Bond paper. —*v.* **bond·ed, bond·ing, bonds.** —*tr.* **1.** To mortgage or place a guaranteed bond on. **2.** To furnish bond or surety for. **3.** To place (an employee, for example) under bond or guarantee. **4.** To join securely, as with glue or cement. **5.** To lay (bricks, for example) in an overlapping pattern for solidity. —*intr.* To secure or hold together with or as if with a bond. [ME < ON *band.*] —**bond'a·ble** *adj.* —**bond'er** *n.*

bond·age (bŏn'dĭj) *n.* **1.** The condition of a slave or serf; servitude. **2.** A state of subjection to a force, power, or influence. **3.** Villeinage. [ME < AN < ME *bonde*, serf < OE *bōnda*, husbandman < ON *bondi*.]

bond·hold·er (bŏnd'hōl'dər) *n.* The owner of a bond or bonds.

bond·ing (bŏn'dĭng) *n. Anthropol.* The formation of close, specialized human relationships, such as those that link parent and child.

bond·maid (bŏnd'mād') *n.* A female bondservant.

bond·man (bŏnd'mən) *n.* A male bondservant.

bond paper *n.* A superior grade of strong white paper made wholly or in part from rag pulp.

bond·ser·vant (bŏnd'sûr'vənt) *n.* **1.** A person obligated to service without wages. **2.** A slave or serf.

bonds·man (bŏndz'mən) *n.* **1.** A male bondservant. **2.** A person who provides bond or surety for another.

bond·wom·an (bŏnd'wo͝om'ən) *n.* A female bondservant.

bone (bōn) *n.* **1.** a. The dense, semirigid, porous, calcified connective tissue of the skeleton of most vertebrates. b. Any of numerous anatomically distinct skeletal structures made of bone. c. A piece of bone. **2. bones.** a. The skeleton. b. The body. c. Mortal remains. **3.** An animal structure or material, such as ivory, resembling bone. **4.** Something made of bone or of material resembling bone, esp.: a. A piece of whalebone or similar material used as a corset stay. b. **bones.** *Informal.* Dice. **5. bones.** The fundamental plan or design, as of the plot of a book. **6.** a. **bones.** Flat clappers made of bone or wood used by the end man in a minstrel show. b. **Bones** *(used with a sing. verb).* The end man in a minstrel show. —*v.* **boned, bon·ing, bones.** —*tr.* **1.** To remove the bones from. **2.** To stiffen (a piece of clothing) with stays, as of whalebone. —*intr. Slang.* To study intensely, usually at the last minute. —*Idioms.* **bone of contention.** The subject of a dispute. **feel in (one's) bones.** To have an intuition of. **have a bone to pick.** To have grounds for a complaint or dispute. **make no bones about.** To be frank and candid about. [ME *bon* < OE *bān.*]

bone ash *n.* The white, powdery calcium phosphate ash of burned bones, used as a fertilizer, in making ceramics, and in cleaning and polishing compounds.

bone-black also **bone black** (bōn'blăk') *n.* A black pigment containing about 10 per cent charcoal, made by roasting bones in an airtight container and used in polishes, as a filtering medium, and in decolorizing sugar.

bone charcoal *n.* Boneblack.

bone china *n.* Porcelain made of clay mixed with bone ash.

bone conduction *n.* The transmission of sound by bone, esp. to the inner ear by the bones of the skull.

bone-dry (bōn'drī') *adj.* Without a trace of moisture; very dry.

bone·fish (bōn'fĭsh') *n., pl.* **bonefish** or **-fish·es.** A marine game fish, *Albula vulpes*, of warm waters, having silvery scales.

bone·head (bōn'hĕd') *n. Slang.* A stupid person; dunce. —**bone'head'ed** *adj.* —**bone'head'ed·ness** *n.*

bone meal *n.* Bones crushed and ground to a coarse powder and used as plant fertilizer and animal feed.

bon·er (bō'nər) *n. Slang.* A blunder.

bone·set (bōn'sĕt') *n.* Any of various plants of the genus *Eupatorium*, esp. *E. perfoliatum*, of eastern North America, having broad clusters of small white flowers. [From its use as a folk medicine.]

bon·fire (bŏn'fīr') *n.* A large outdoor fire. [ME *bonfir* : *bon*, bone + *fir*, fire.]

bong (bŏng, bông) *n.* A deep ringing sound, as of a bell. —*tr. & intr.v.* **bonged, bong·ing, bongs.** To sound with a bong; ring. [Imit.]

bon·go[1] (bŏng'gō, bŏng'-) *n., pl.* **-gos** also **-goes.** One of a pair of connected tuned drums that are played by beating with the hands. [Am. Sp. (West Indies) *bongá.*]

bon·ho·mie (bŏn'ə-mē') *n.* A pleasant and affable disposition; geniality. [Fr. < *bonhomme*, good-natured man : *bon*, good (< Lat. *bonus*) + *homme*, man < Lat. *homo.*]

bon·i·face (bŏn'ə-fās, -fəs') *n.* An innkeeper. [After *Boniface*, an innkeeper in *The Beaux' Strategem* by George Farquhar (1678–1707).]

boning knife *n.* A knife with a narrow blade and a sharp point for boning poultry, meat, and fish.

bo·ni·to (bə-nē'tō) *n., pl.* **bonito** or **-tos.** **1.** Any of several marine food and game fishes of the genus *Sarda*, related to and resembling the tuna. **2.** Any of several fishes similar to the bonito. [Sp. < *bonito*, pretty < Lat. *bonus*, good.]

bon·kers (bŏng'kərz) *adj. Slang.* Crazy. [Orig. unknown.]

bon mot (bŏN mō') *n., pl.* **bons mots** (bŏN mō', mōz'). A clever saying; witticism. [Fr. : *bon*, good + *mot*, word.]

bonne (bŏn) *n.* A French female servant or maid. [Fr., fem. of *bon*, good < Lat. *bonus.*]

bon·net (bŏn'ĭt) *n.* **1.** a. A hat that is held in place by ribbons tied under the chin, worn by women and girls. b. *Scot.* A brimless cap worn by men. c. A feather headdress worn by some American Indians. **2.** A removable metal plate over a valve or other machinery part. **3.** *Chiefly Brit.* The hood of an automobile. **4.** A wind screen for a chimney. **5.** A strip of canvas laced to a fore-and-aft sail to increase sail area.

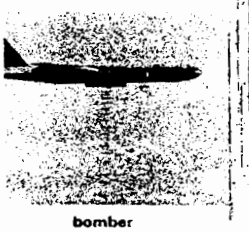

bomber
U.S. B-52 bomber plane



boneset



bongo[2]
Bongo drums



bonnet

p pop / r roar / s sauce / sh ship, dish / t tight / th thin, path / *th* this, bathe / ū cut / ûr urge / v valve / w with / y yes / z zebra, size / zh vision / ə about, item, edible, gallop, circus / œ *Fr.* feu, *Ger.* schön / ü *Fr.* tu, *Ger.* über / KH *Ger.* ich, *Scot.* loch / N *Fr.* bon.

Case 1:04-cv-00204-JJF Document 169-2 Filed 04/14/2005 Page 28 of 50

preserve. **2.** *Slang.* To make a recording of: *can the audience's applause.* **3.** *Slang.* **a.** To dismiss from employment or school. **b.** To quit or dispense with: *can the chatter.* [ME *canne,* a water container < OE.] —**can'ner** *n.*

Can·a·da balsam (kăn'ə-də) *n.* **1.** The balsam fir. **2.** A viscous, yellowish, transparent resin obtained from the balsam fir and used as a mounting cement for microscopic specimens.

Canada goose *n.* A common wild goose, *Branta canadensis,* of North America, having grayish plumage, a black neck and head, and a white face patch.

Canada jay *n.* A bird, *Perisoreus canadensis,* of North American conifer forests, having gray plumage and a black-capped head.

Canada thistle *n.* A weedy plant, *Cirsium arvense,* native to Eurasia, having prickly leaves and clusters of purplish flowers.

Ca·na·di·an bacon (kə-nā'dē-ən) *n.* Cured rolled bacon from the loin of a pig.

Canadian French *n.* The language of the French-Canadians.

ca·naille (kə-nī', -nāl') *n.* The masses of common people; rabble; riffraff. [Fr. < Ital. *canaglia* < *cane,* dog < Lat. *canis.*]

ca·nal (kə-năl') *n.* **1.** A manmade waterway or artificially improved river used for irrigation, shipping, or travel. **2.** *Anat.* A tube or duct. **3.** *Astron.* One of the faint, hazy markings resembling straight lines on the surface of Mars. —*tr.v.* **-naled, -nel·ing, -nals** or **-naled, -nal·ing, -nals.** **1.** To dig an artificial waterway through. **2.** To provide with a canal or canals. [Partly < Fr., channel, and partly < ME, tube, both < Lat. *canalis,* tube, channel.]

can·a·lic·u·late (kăn'ə-lĭk'yə-lĭt, -lāt') *adj.* Having grooves or channels. [Lat. *canaliculatus* < *canaliculus,* dim. of *canalis,* channel.]

can·a·lic·u·lus (kăn'ə-lĭk'yə-ləs) *n., pl.* **-li** (-lī'). A small bodily channel, as a tear duct. [Lat., dim. of *canalis,* conduit.] —**can'a·lic'u·lar** (-lər) *adj.*

can·a·li·za·tion (kăn'ə-lĭ-zā'shən) *n.* **1.** The act or an instance of canalizing. **2.** A system of canals.

can·a·lize (kăn'ə-līz') *tr.v.* **-lized, -liz·ing, -liz·es. 1.** To furnish with, build, or convert into a canal or canals. **2.** To channel into a particular direction; provide an outlet for.

canal rays *pl.n.* Positively charged ions formed in a gas by electrical discharge and attracted to the cathode of the discharge tube. Not in current technical use. [Transl. of G. *Kanalstrahl* (from the fissures in the cathode, through which the ions pass).]

can·a·pé (kăn'ə-pā', -pē') *n.* A cracker or small, thin piece of bread or toast spread with cheese, meat, or relish and served as an appetizer. [Fr. < *canapé,* couch < Med. Lat. *canapeum,* mosquito net. —see CANOPY.]

ca·nard (kə-närd') *n.* An unfounded or false, deliberately misleading story. [Fr., prob. < the phrase *vendre un canard à moitié,* to half-sell a duck, to swindle.]

ca·nar·y (kə-nâr'ē) *n., pl.* **-ies. 1.** A songbird, *Serinus canaria,* native to the Canary Islands, that is greenish to yellow and has long been bred as a cage bird. **2.** *Slang.* An informer; stool pigeon. **3.** A sweet white wine, similar to Madeira, from the Canary Islands. **4.** A lively 16th-century court dance. **5.** A light to moderate or vivid yellow. [Fr. *canari* < OSp. *canario* < (*Islas*) *Canarias,* Canary (Islands) < LLat. *Canariae* (*Insulae*), (islands) of dogs < Lat. *canis,* dog.]

canary grass *n.* A grass, *Phalaris canariensis,* native to Europe, having straw-colored seeds used to feed birds.

ca·nas·ta (kə-năs'tə) *n.* A card game for two to six players, related to rummy and requiring two decks of cards. [Sp. < *canasto,* basket < Lat. *canistrum.* —see CANISTER.]

can-can (kăn'kăn') *n.* An exuberant dance, originating in France, performed by women and marked by high kicking. [Fr.]

can·cel (kăn'səl) *v.* **-celed, -cel·ing, -cels** also **-celled, -cel·ling, -cels.** —*tr.* **1.** To cross out with lines or other markings. **2.** To annul or invalidate: *cancel an invitation.* **3.** To mark or perforate (a postage stamp, for example) to indicate that it may not be used again. **4.** To equalize or make up for; offset. **5.** *Math.* **a.** To remove a common factor from the numerator and denominator of a fractional expression. **b.** To remove a common factor or term from both members of an equation or inequality. **6.** *Printing.* To omit or delete. —*intr.* To balance or neutralize one another: *two forces that canceled out.* —*n.* **1. a.** The omission or deletion of typed or printed matter. **b.** The matter omitted or deleted or its replacement. **2.** A part of a book used as a substitute for an original part of the book. [ME < Norman Fr. *canceler* < Lat. *cancellare,* to cross out < *cancelli,* lattice, dim. of *cancer,* lattice.] —**can'cel·a·ble** *adj.* —**can'cel·er** *n.*

can·cel·a·tion (kăn'sə-lā'shən) *n.* Variant of **cancellation.**

can·cel·late (kăn'səl'ĭt, kăn'sə-lāt') also **can·cel·lat·ed** (-lā'tĭd). *adj. Anat.* Cancellous. [Lat. *cancellatus,* p.part. of *cancellare,* to make like a lattice. —see CANCEL.]

can·cel·la·tion also **can·ce·la·tion** (kăn'sə-lā'shən) *n.* **1.** The act of canceling. **2.** Marks or perforations indicating canceling. **3.** Something that has been canceled.

can·cel·lous (kăn-sĕl'əs, kăn'sə-ləs) *adj. Anat.* Having a coarse netlike or spongy structure. Used of bone.

can·cer (kăn'sər) *n.* **1. a.** Any of various malignant neoplasms that manifest invasiveness and a tendency to metastasize to new sites. **b.** The pathological condition characterized by such growths. **2.** A pernicious, spreading evil: *A cancer of bigotry spread through the community.* **3. Cancer. a.** A constellation in the Northern Hemisphere near Leo and Gemini. **4. Cancer. a.** The fourth sign of the zodiac. **b.** One born under the astrological sign of Cancer. [Lat. *cancer, cancr-.*] —**can'cer·ous** (-sər-əs) *adj.*

can·croid (kăng'kroid') *adj.* **1.** Resembling a cancer. **2.** Similar to a crab. —*n.* A skin cancer.

can·del·a (kăn-dĕl'ə) *n.* A unit of luminous intensity equal to $^{1}/_{60}$ of the luminous intensity per square centimeter of a blackbody radiating at the temperature of solidification of platinum (2,046°K). [Lat. *candela,* candle.]

can·de·la·bra (kăn'dl-ä'brə, -äb'rə, -ā'brə) *n.* A candelabrum.

can·de·la·brum (kăn'dl-ä'brəm, -äb'rəm, -ā'brəm) *n., pl.* **-bra** (-brə) or **-brums.** A large decorative candlestick having several arms or branches. [Lat. < *candela,* candle.]

can·dent (kăn'dənt) *adj.* Having a white-hot glow; incandescent. [Lat. *candens, candent-,* pr.part. of *candēre,* to shine.]

can·des·cence (kăn-dĕs'əns) *n.* The state of being white hot; incandescence. [< Lat. *candescens,* pr.part. of *candescere,* inceptive of *candēre,* to shine.] —**can·des'cent** (-ənt) *adj.* —**can·des'cent·ly** *adv.*

can·did (kăn'dĭd) *adj.* **1.** Free from prejudice; impartial. **2.** Without pretense or reserve; straightforward: *candid opinions.* **3.** Not posed or rehearsed: *a candid picture.* —*n.* An unposed informal photograph. [Fr. *candide* < Lat. *candidus* < *candēre,* to shine.] —**can'did·ly** *adv.* —**can'did·ness** *n.*

can·di·da (kăn'dĭ-də) *n.* Any of the pathogenic yeastlike imperfect fungi of the genus *Candida.* [NLat. *Candida,* genus name < Lat., fem. of *candidus,* white.]

can·di·date (kăn'dĭ-dāt', -dĭt) *n.* **1.** A person who seeks or is nominated for an office, prize or honor. **2.** A person who seems likely to gain a certain position or come to a certain fate. [Lat. *candidatus,* clothed in white (from the white togas worn by Romans seeking office) < *candidus,* white. —see CANDID.] —**can'di·da·cy** (-də-sē), **can'di·da·ture** (-də-chŏor', -chər) *n.*

candid camera *n.* A small, easily operated camera with a fast lens for taking unposed or informal photographs.

can·di·di·a·sis (kăn'dĭ-dī'ə-sĭs) *n.* A fungous infection caused by a member of the genus *Candida.*

can·died (kăn'dēd) *adj.* Permeated, covered, encrusted, or cooked with sugar: *candied sweet potatoes.*

can·dle (kăn'dl) *n.* **1.** A solid, usually cylindrical mass of tallow, wax, or other fatty substance with an axially embedded wick that is burned to provide light. **2.** Something resembling a candle in shape or use. **3.** *Physics.* **a.** An obsolete unit of luminous intensity, originally defined in terms of a wax candle with standard composition and equal to 1.02 candelas. **b.** A candela. —*tr.v.* **-dled, -dling, -dles.** To examine (an egg) for freshness in front of a light. —**idioms. burn (one's) candle at both ends.** To expend too much of one's energy in too many directions. **not hold a candle to.** To be not nearly as good as. [ME *candel* < OE < Lat. *candela* < *candēre,* to shine.] —**can'dler** *n.*

can·dle·ber·ry (kăn'dl-bĕr'ē) *n.* The wax myrtle or its fruit.

can·dle·fish (kăn'dl-fĭsh') *n., pl.* **candlefish** or **-fish·es.** An oily, edible fish, *Thaleichthys pacificus,* of northern Pacific waters, formerly dried and used as a torch by Indians.

can·dle·foot (kăn'dl-fo͝ot') *n.* A foot-candle.

can·dle·hold·er (kăn'dl-hōl'dər) *n.* A candlestick.

can·dle·light (kăn'dl-līt') *n.* **1.** Illumination from a candle or candles. **2.** Dusk; twilight.

Can·dle·mas (kăn'dl-məs) *n.* A church festival celebrated on February 2 as the feast of the purification of the Virgin Mary and the presentation of the infant Christ in the temple. [ME *candelmasse* < OE *candelmæsse* : *candel,* candle + *mæsse,* mass; (from the blessing of candles at the feast).]

can·dle·nut (kăn'dl-nŭt') *n.* **1.** A tree, *Aleurites moluccana,* of tropical Asia and Polynesia, bearing nuts that yield an oil used in paints and varnishes. **2.** The nut of the candlenut.

can·dle·pin (kăn'dl-pĭn') *n.* **1.** A slender bowling pin used in a variation of the game of tenpins. **2. candlepins** *(used with a sing. verb).* A bowling game using a ball smaller than that used in tenpins.

can·dle·pow·er (kăn'dl-pou'ər) *n.* Luminous intensity expressed in standard candles.

can·dle·stick (kăn'dl-stĭk') *n.* A holder, often ornamental, with cups or spikes for a candle or candles. [ME *candelstikke* < OE *candelsticca.*]

can·dle·wick (kăn'dl-wĭk') *n.* The wick of a candle.

can·dle·wick·ing (kăn'dl-wĭk'ĭng) *n.* **1.** Soft, heavy cotton thread similar to that used to make wicks for candles. **2.** Embroidery made of tufts of candlewicking.

can·dle·wood (kăn'dl-wo͝od') *n.* **1.** The ocotillo. **2.** The resinous wood of the ocotillo or similar plants.

can·dor (kăn'dər) *n.* **1.** Frankness of expression; straightforwardness. **2.** Freedom from prejudice; impartiality. [Lat. < *candēre,* to shine.]

can·dour (kăn'dər) *n. Chiefly Brit.* Variant of **candor.**



canal



canary

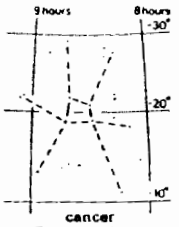

cancer
The constellation Cancer



candelabrum

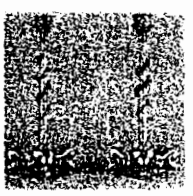

candlestick
19th-century English candlesticks

Case 1:04-cv-00204-JJF Document 169-2 Filed 04/14/2005 Page 29 of 50

dri·er¹ also **dry·er** (drī'ər) *n.* 1. One that dries. 2. A substance added to paint, varnish, or ink to speed drying.
dri·er² (drī'ər) *adj.* A comparative of **dry**.
dri·est (drī'ĭst) *adj.* A superlative of **dry**.
drift (drĭft) *v.* **drift·ed, drift·ing, drifts.** —*intr.* 1. To be carried along by or as by currents of air or water. 2. To proceed or move unhurriedly and smoothly. 3. To move leisurely or sporadically from place to place, esp. without regular employment and with no particular goal. 4. **a.** To wander from a set course or point of attention; stray. **b.** To vary from or oscillate randomly about a fixed setting, position, or mode of operation. 5. To be piled up in banks or heaps by the force of a current. —*tr.* 1. To cause to drift. 2. To cover with drifts. 3. *Western U.S.* To drive (livestock) slowly or far afield, esp. for grazing. —*n.* 1. The act or condition of drifting. 2. Something moving along on a current of air or water. 3. A bank or pile, as of sand or snow, heaped up by currents of air or water. 4. *Geol.* Rock debris transported and deposited by or from ice, esp. by or from a glacier. 5. **a.** A trend or general bearing; direction. **b.** General meaning or purport; tenor. 6. **a.** A gradual change in position or opinion. **b.** A deviation from an original model, method, or intention. 7. **a.** Lateral displacement or deviation of an object or vehicle from a planned course, esp. as a result of wind, ocean current, or other disturbance in the medium of travel. **b.** Variation or random oscillation about a fixed setting, position, or mode of behavior. 8. A change in the output of a circuit or amplifier that takes place slowly. 9. The rate of flow of a water current. 10. **a.** A tool for ramming or driving something down. **b.** A tapered steel pin for enlarging and aligning holes. 11. **a.** A horizontal or nearly horizontal passageway in a mine running through or parallel to a vein. **b.** A secondary mine passageway between two main shafts or tunnels. 12. A drove or herd, esp. of swine. [< ME, drove, herd, act of driving.] —**drift'er** *n.* —**drift'y** *adj.*
drift·age (drĭf'ĭj) *n.* 1. Deviation from a set course caused by drifting. 2. Something that has been carried along or deposited by air or water currents.
drift·wood (drĭft'wŏŏd') *n.* 1. Wood floating in or washed up by the water. 2. A collection of worthless or trivial elements.
drill¹ (drĭl) *n.* 1. **a.** An implement with cutting edges or a pointed end for boring holes in hard materials, usually by a rotating abrasion or by repeated blows. **b.** The hand-operated or hand-powered holder for this tool. 2. Disciplined, repetitious exercise as a means of teaching and perfecting a skill or procedure, esp. as part of military training. 3. Any of several marine gastropod mollusks, chiefly of the genus *Urosalpinx*, that drill holes into the shells of bivalve mollusks. —*v.* **drilled, drill·ing, drills.** —*tr.* 1. To make a hole in (a hard material) with a drill. 2. To strike or hit with a hard jabbing blow. 3. **a.** To instruct thoroughly by repetition in a skill or procedure. **b.** To infuse knowledge of or skill in by repetitious instruction. —*intr.* 1. To make a hole with a drill. 2. To perform an exercise. [Du. *dril* < *drillen*, to drill.]
drill² (drĭl) *n.* 1. A trench or furrow in which seeds are planted. 2. A row of planted seeds. 3. A machine or implement for planting seeds in holes or furrows. —*tr.v.* **drilled, drill·ing, drills.** 1. To sow (seeds) in rows. 2. To plant (a field) in drills. [Perh. < DRILL¹, rill (obs.).]
drill³ (drĭl) *n.* Durable cotton or linen twill of varying weights, generally used for work clothes. [Short for *drilling* < G. *Drillich* < OHG *drilich* < Lat. *trilix*, triple-twilled : *tri-*, three + *licum*, thread.]
drill⁴ (drĭl) *n.* A monkey, *Mandrillus leucophaeus*, of western Africa, related to and resembling the mandrill. [Native word in West Africa.]
drill instructor *n.* A noncommissioned officer who instructs recruits in military drill and discipline.
drill·mas·ter (drĭl'măs'tər) *n.* 1. A drill instructor. 2. An instructor given to severely rigorous training.
drill press *n.* A powered vertical drilling machine in which the drill is pressed to the work automatically or by a hand lever.
drill·ship (drĭl'shĭp') *n.* A ship equipped for ocean floor drilling.
drill·stock (drĭl'stŏk') *n.* The part of a drilling tool or machine that holds the shank of a drill or bit.
drink (dringk) *v.* **drank** (drăngk), **drunk, drink·ing, drinks.** —*tr.* 1. To take into the mouth and swallow (a liquid). 2. To soak up (liquid or moisture): *drank the fresh air.* 3. To take in eagerly through the senses or intellect: *drank in her every word.* 4. To swallow the liquid contents of (a vessel). 5. **a.** To give or make (a toast). **b.** To toast (a person or occasion, for example). 6. To bring to a specific state by drinking alcoholic liquors: *drank himself into a stupor.* —*intr.* 1. To swallow liquid. 2. To imbibe alcoholic liquors. 3. To salute a person or occasion with a toast. —*n.* 1. A liquid that is fit for drinking; beverage. 2. An alcoholic beverage. 3. An amount of liquid swallowed. 4. Excessive or habitual indulgence in alcoholic liquor. 5. *Slang.* A body of water; the sea: *slipped off the cliff and into the drink.* [ME *drinken* < OE *drincan.*]
drink·a·ble (drĭng'kə-bəl) *adj.* Suitable for drinking; potable. —*n.* A beverage.
drink·er (drĭng'kər) *n.* 1. One who drinks. 2. One who drinks alcoholic liquors excessively or habitually.
drip (drĭp) *v.* **dripped, drip·ping, drips.** —*intr.* 1. To fall in drops. 2. To shed drops. 3. To ooze or be saturated with or as if with liquid: *a pompous fool dripping with hypocrisy.* —*tr.* To let fall in or as if in drops: *a dagger dripping blood.* —*n.* 1. The process of forming and falling in drops. 2. Liquid or moisture that falls in drops. 3. The sound made by dripping liquid. 4. A projection on a cornice or sill that protects the area below from rainwater. 5. *Slang.* A tiresomely dull person. [ME *drippen* < OE *dryppan.*]
drip-dry (drĭp'drī') *adj.* Made of a fabric that will not wrinkle when hung dripping wet for drying. —*intr.v.* **-dried, -dry·ing, -dries.** To dry with no wrinkles when hung dripping wet.
drip pan *n.* A pan for catching the drippings from roasting meat.
drip·ping (drĭp'ĭng) *n.* 1. The act or sound of something that drips. 2. Often **drippings.** The fat and juice exuded from roasting meat. —*adv.* Completely; thoroughly: *dripping wet.*
drip·py (drĭp'ē) *adj.* **-pi·er, -pi·est.** 1. Very wet; drizzly. 2. *Slang.* Mawkishly sentimental. —**drip'pi·ness** *n.*
drip·stone (drĭp'stōn') *n.* 1. A drip made of stone, as on a cornice over a door or window. 2. Calcium carbonate in the form of stalactites or stalagmites.
drive (drīv) *v.* **drove** (drōv), **driv·en** (drĭv'ən), **driv·ing, drives.** —*tr.* 1. To push, propel, or press onward forcibly. 2. To repulse by authority or force: *drove the attackers away.* 3. To force to work, usually excessively. 4. To force into or from a particular act or state: *She drives me crazy.* 5. *Sports.* **a.** To throw, strike, or cast (a ball, for example) hard or rapidly. **b.** *Basketball.* To move with the ball directly through: *drove the lane.* 6. *Baseball.* To cause (a baserunner or run) to be scored. 7. To force to go through or penetrate. 8. To create or produce by penetrating forcibly. 9. To guide, control, or direct (a vehicle). 10. To convey or transport in a vehicle. 11. To supply the motive force to and cause to function: *Steam drives the engine.* 12. To carry through vigorously to a conclusion: *drove home his point.* 13. **a.** To chase (game) into the open or into traps or nets. **b.** To search (an area) for game in this manner. —*intr.* 1. To move along or advance quickly as if pushed by an impelling force. 2. To rush, dash, or advance violently against an obstruction: *The wind drove into my face.* 3. To hit, throw, or impel a ball or other missile forcibly. 4. *Basketball.* To move directly to the basket with the ball. 5. To operate a car or other vehicle. 6. To go or be transported in a car or other vehicle. 7. To make an effort to reach or achieve a particular objective; aim. —*phrasal verb.* **drive at.** To mean to do or say. —*n.* 1. The act of driving. 2. A road for automobiles and other vehicles. 3. A trip or journey in a vehicle. 4. **a.** The means or apparatus for transmitting motion to a machine or machine part. **b.** The means by which automotive power is applied to a roadway: *four-wheel drive.* **c.** The means or apparatus for controlling and directing an automobile: *right-hand drive.* 5. An organized effort to accomplish a purpose, such as raising money. 6. Energy, push, or aggressiveness. 7. *Psychoanal.* A strong motivating tendency or instinct, esp. of sexual or aggressive origin, that prompts activity toward a particular end. 8. A massive and sustained military offensive. 9. *Sports.* **a.** The act of hitting, knocking, or thrusting the ball very swiftly. **b.** The stroke or thrust by which the ball is driven. **c.** *Basketball.* The act of moving with the ball directly to the basket. 10. **a.** A rounding-up and driving of cattle to new pastures or to market. **b.** A gathering and driving of logs down a river. **c.** The cattle or logs thus driven. [ME *driven* < OE *drīfan.*]
drive-in (drīv'ĭn') *n.* A retail establishment designed to permit customers to remain in their automobiles while being accommodated. —*adj.* Designating or pertaining to a drive-in.
driv·el (drĭv'əl) *v.* **-eled, -el·ing, -els** or **-elled, -el·ling, -els.** —*intr.* 1. To slobber; drool. 2. To flow like spittle or saliva. 3. To talk stupidly or childishly. —*tr.* 1. To allow to flow from the mouth. 2. To say (something) stupidly. —*n.* 1. Saliva flowing from the mouth. 2. Stupid or senseless talk. [ME *drivelen* < OE *dreflian.*] —**driv'el·er** *n.*
drive-line (drīv'līn') *n.* The components of an automotive vehicle that connect the transmission with the driving axles and include the universal joint and drive shaft.
driv·en (drĭv'ən) *v.* Past participle of **drive.** —*adj.* 1. Piled up or carried along by a current: *driven snow.* 2. Having or motivated by a compulsive quality or need: *a driven man.*
driv·er (drī'vər) *n.* 1. One that drives, esp. a chauffeur. 2. A tool or device used for driving, as a hammer. 3. A machine part that transmits motion or force to another part. 4. A wooden-headed golf club with a long shaft, used for making long shots from the tee.
driver ant *n.* Any of various rapacious tropical Old World ants of the subfamily Dorylinae, that move in huge groups.
driver's seat *n.* A position of control or authority.
drive shaft *n.* A rotating shaft that transmits mechanical power to a point or region of application.
drive-up (drīv'ŭp') *adj.* Enabling customers to remain in their automobiles while being served: *a drive-up window at the bank.*


driftwood


drill¹
Drilling for oil

trics. —**ex'o-gam'ic** (ĕk'sə-găm'ĭk), **ex-og'a-mous** (ĕk-sŏg'ə-məs) *adj.*

ex-og-e-nous (ĕk-sŏj'ə-nəs) *adj.* **1.** *Biol.* Derived or developed from external causes. **2.** *Bot.* Characterized by the addition of layers of woody tissue. **3.** Having a cause external to the body. Used of diseases. [Fr. *exogène* : *exo-*, exo- + *gène*, born < Gk. *-genēs*.] —**ex-og'e-nous-ly** *adv.*

ex-on-er-ate (ig-zŏn'ə-rāt') *tr.v.* **-at-ed, -at-ing, -ates.** **1.** To free from blame. **2.** To free from a responsibility, obligation, or task. [ME *exoneraten* < Lat. *exonerare, exonerat-*, to free from a burden : *ex-*, off + *onus*, burden.] —**ex-on'er-a'tion** *n.* —**ex-on'er-a-tive** *adj.*

ex-o-nu-cle-ase (ĕk'sō-nōō'klē-ās', -āz', -nyōō'-) *n.* Any of a group of enzymes that remove nucleotides sequentially from the end of a DNA chain.

ex-oph-thal-mic goiter (ĕk'sŏf-thăl'mĭc) *n.* A disease caused by the excessive production of thyroid hormone and characterized by an enlarged thyroid gland, protrusion of the eyeballs, tachycardia, and nervous excitability.

ex-oph-thal-mos also **ex-oph-thal-mus** (ĕk'sŏf-thăl'məs) *n.* Abnormal protrusion of the eyeball. [Gk., with prominent eyes : *ex-*, out + *ophthalmos*, eye.] —**ex'oph-thal'mic** *adj.*

ex-or-bi-tance (ig-zôr'bĭ-təns) *n.* **1.** Excessiveness, as of price, demand, or need; extravagance. **2.** An exorbitant act, esp. one that deviates from what is right or proper.

ex-or-bi-tant (ig-zôr'bĭ-tənt) *adj.* **1.** Exceeding the appropriate limits or bounds; immoderate. **2.** *Law.* Exceeding the established limits of right or propriety. [ME, aberrant < OFr. < Med. Lat. *exorbitans*, pr.part. *exorbitare*, to deviate : *ex*, out of + *orbita*, path < *orbis*, ring.] —**ex-or'bi-tant-ly** *adv.*

ex-or-cise (ĕk'sôr-sīz', -sər-) *tr.v.* **-cised, -cis-ing, -cis-es.** **1.** To expel (an evil spirit) by or as if by incantation or adjuration. **2.** To free from evil spirits. [ME *exorcisen* < Med. Lat. *exorcizare* < Gk. *exorkizien* : *ex-*, out + *horkos*, oath.] —**ex'or-cis'er** *n.*

ex-or-cism (ĕk'sôr-sīz'əm, -sər-) *n.* **1.** The act of exorcising. **2.** A formula used in exorcising. —**ex'or-cist** *n.*

ex-or-di-um (ĕg-zôr'dē-əm, ĭk-sôr'-) *n., pl.* **-di-ums** or **-di-a** (-dē-ə). A beginning or introductory part, esp. of a speech or treatise. [Lat. < *exordiri*, to begin : *ex-* (intensive) + *ordiri*, to begin.] —**ex-or'di-al** *adj.*

ex-o-skel-e-ton (ĕk'sō-skĕl'ĭ-tən) *n.* An external protective or supporting structure of many invertebrates, such as insects and crustaceans. —**ex'o-skel'e-tal** *adj.*

ex-os-mo-sis (ĕk'sŏz-mō'sĭs, -sŏs-) *n.* The flow of a fluid through a permeable membrane into a less dense fluid. [EX(O)- + OSMOSIS.] —**ex'os-mot'ic** (-mŏt'ĭk) *adj.*

ex-o-sphere (ĕk'sō-sfĭr') *n.* The outermost portion of the atmosphere, estimated to begin 300 to 600 miles above the earth, characterized by the ability of constituent molecules with appropriate velocities to escape from the earth without colliding with other molecules. —**ex'o-spher'ic** *adj.*

ex-o-spore (ĕk'sō-spôr', -spōr') *n.* *Bot.* The outermost layer of a spore in some algae and fungi.

ex-o-spo-ri-um (ĕk'sō-spôr'ē-əm, -spōr'-) *n., pl.* **-i-a** (-ē-ə). *Bot.* Exine. [NLat. : EXO- + *spora*, spore.]

ex-os-to-sis (ĕk'sŏs-tō'sĭs) *n., pl.* **-ses** (-sēz'). A bony tumor on the surface of a bone. [Gk. *exostōsis* : *ex-*, out of + *osteon*, bone.]

ex-o-ter-ic (ĕk'sə-tĕr'ĭk) *adj.* **1.** Not confined to an inner circle of disciples or initiates. **2.** Comprehensible to or suited to the public; popular. **3.** Pertaining to the outside; external. [Lat. *exotericus*, external < Gk. *exōterikos* < *exōterō*, comp. of *exō*, outside < *ex*, out.] —**ex'o-ter'i-cal-ly** *adv.*

ex-o-ther-mic (ĕk'sō-thûr'mĭk) also **ex-o-ther-mal** (-məl) *adj.* Releasing, as opposed to absorbing, heat. —**ex'o-ther'mi-cal-ly** *adv.*

ex-ot-ic (ig-zŏt'ĭk) *adj.* **1.** From another part of the world; foreign. **2.** Having the charm of the unfamiliar; strikingly and intriguingly unusual or different. **3.** Of or relating to striptease. —*n.* **1.** One that is exotic. **2.** A striptease performer. [Lat. *exoticus* < Gk. *exōtikos* < *exō*, outside < *ex*, out.] —**ex-ot'i-cal-ly** *adv.* —**ex-ot'ic-ness** *n.*

ex-ot-i-cism (ig-zŏt'ĭ-sĭz'əm) *n.* The quality or condition of being exotic.

ex-o-tox-in (ĕk'sō-tŏk'sĭn) *n.* A toxin excreted by a microorganism into a surrounding medium and recoverable from a culture without destruction of the producing agent.

ex-pand (ĭk-spănd') *v.* **-pand-ed, -pand-ing, -pands.** —*tr.* **1.** To increase the size, volume, quantity, or scope of. **2.** To express at length or in detail; enlarge upon. **3.** *Math.* To write (a quantity) as a sum of terms, as a continued product, or as another extended form. —*intr.* **1.** To open up or out. **2.** To become greater in size, volume, or scope. **3.** To speak or write at length or in detail. **4.** To feel expansive. [ME *expanden*, to spread out < Lat. *expandere* : *ex-*, out + *pandere*, to spread.] —**ex-pand'a-ble** *adj.* —**ex-pand'er** *n.*

expanding universe theory *n.* **1.** The interpretation of the shifts of the lines in the spectra of galaxies as resulting from a Doppler effect, with the experimental results that all galaxies are retreating from each other at speeds proportional to the distance separating them and that the universe is expanding. **2.** The cosmological theory in which violent eruption from a point source leads to the formation of elementary particles, the subsequent formation of hydrogen and helium, and the dispersion of the galaxies that develop from this matter.

ex-pan-dor (ĭk-spăn'dər) *n.* A transducer designed for a given range of input voltages which produces a larger range of output voltages.

ex-panse (ĭk-spăns') *n.* **1.** A wide and open extent, as of land, sky, or water. **2. a.** Expansion. **b.** The distance or amount of expansion. [Lat. *expansum* < *expandere*, to spread out. —see EXPAND.]

ex-pan-si-ble (ĭk-spăn'sə-bəl) *adj.* Capable of expanding or of being expanded. —**ex-pan'si-bil'i-ty** *n.*

ex-pan-sile (ĭk-spăn'səl, -sīl') *adj.* Of, pertaining to, or capable of expansion.

ex-pan-sion (ĭk-spăn'shən) *n.* **1.** The act or process of expanding. **2.** The state of being expanded. **3. a.** An expanded part. **b.** A product of expanding. **4.** The extent or amount by which something has expanded. **5.** Increase in the dimensions of a body. **6.** *Math.* **a.** A quantity written in an extended form, as a sum of terms or as a continued product. **b.** The process of obtaining this form. **7.** An expanse.

ex-pan-sion-ar-y (ĭk-spăn'shə-nĕr'ē) *adj.* Tending toward expansion.

expansion bolt *n.* A bolt having an attachment that expands as the bolt is driven into a surface.

ex-pan-sion-ism (ĭk-spăn'shə-nīz'əm) *n.* The practice or policy of esp. territorial or economic expansion by a nation. —**ex-pan'sion-ist** *n.*

ex-pan-sive (ĭk-spăn'sĭv) *adj.* **1.** Capable of expanding or tending to expand. **2.** Broad or comprehensive in extent. **3.** Disposed to be open and generous; outgoing. **4.** Marked by euphoria and delusions of grandeur. **5.** Grand in scale. —**ex-pan'sive-ly** *adv.* —**ex-pan'sive-ness** *n.* —**ex'pan-siv'i-ty** (ĕk'spăn-sĭv'ĭ-tē) *n.*

ex par-te (ĕks pär'tē) *adj. & adv.* **1.** *Law.* From or on one side only. **2.** One-sided; partisan.

ex-pa-ti-ate (ĭk-spā'shē-āt') *intr.v.* **-at-ed, -at-ing, -ates.** **1.** To speak or write at length: *expatiated on the subject until everyone was bored.* **2.** *Archaic.* To wander freely. [Lat. *expatiari, expatiat-* : *ex-*, out + *spatiari*, to spread < *spatium*, space.] —**ex-pa'ti-a'tion** *n.*

ex-pa-tri-ate (ĕk-spā'trē-āt') *v.* **-at-ed, -at-ing, -ates.** —*tr.* **1.** To send into exile. **2.** To remove (oneself) from residence in one's native land. —*intr.* **1.** To give up residence in one's homeland. **2.** To renounce one's allegiance to one's homeland. —*n.* (-ĭt, -āt'). **1.** A person who has taken up residence in a foreign country. **2.** A person who has renounced his native land. —*adj.* Residing in a foreign country; expatriated. [Med. Lat. *expatriare, expatriat-* : Lat. *ex-*, out of + Lat. *patria*, native land < *pater*, father.] —**ex-pa'tri-a'tion** (ĕks-pā'trē-ā'shən) *n.*

ex-pect (ĭk-spĕkt') *tr.v.* **-pect-ed, -pect-ing, -pects.** **1.** To look forward to the probable occurrence or appearance of. **2.** To consider likely or certain: *expect to see him soon.* **3.** To consider reasonable or due: *I expect an apology.* **4.** To consider obligatory; require. **5.** *Informal.* To presume; suppose. —See Usage note at **anticipate.** [Lat. *expectare* : *ex-*, out + *spectare*, look at, freq. of *specere*, to see.] —**ex-pect'a-ble** *adj.* —**ex-pect'a-bly** *adv.* —**ex-pect'ed-ly** *adv.* —**ex-pect'ed-ness** *n.*

Synonyms: *expect, anticipate, hope, await, foresee.* These verbs are related in various ways to the idea of looking ahead to something in the future. To *expect* is to look forward to the occurrence of something with little reservation as to its likelihood. To *anticipate* usually involves something more than expectation. In some contexts it refers to taking appropriate action in advance of something expected, so as to forestall or prevent its occurrence, or so as to meet an order or request: *anticipate trouble; anticipate one's wishes.* The term can also refer to looking forward to something and experiencing it beforehand: *anticipate pleasure.* To *hope* is to desire, usually with confidence in the likelihood of gaining what is desired. To *await*, in this comparison, is to look forward to without doubt as to occurrence. To *foresee* is to know of an occurrence in advance of its coming into existence, by means of insight, intuition, study, or inference.

ex-pec-tan-cy (ĭk-spĕk'tən-sē) *n., pl.* **-cies.** **1.** The act or state of expecting; expectation. **2.** The state of being expected. **3. a.** Something expected. **b.** An expected amount calculated on the basis of statistical probability: *a life expectancy of 70 years.* —**ex-pec'tance** *n.*

ex-pec-tant (ĭk-spĕk'tənt) *adj.* **1.** Having or marked by expectation: *expectant of praise.* **2.** Expecting the birth of a child. —**ex-pec'tant** *n.* —**ex-pec'tant-ly** *adv.*

ex-pec-ta-tion (ĕk'spĕk-tā'shən) *n.* **1. a.** The act or state of expecting. **b.** Eager anticipation: *eyes shining with expectation.* **2.** The state of being expected. **3. a. expectations.** Prospects, esp. of inheritance. **b.** Something expected. **4.** The expected value of a random variable, esp. the mean. **5.** Expectancy (sense 3.b.).

ex-pec-ta-tive (ĭk-spĕk'tə-tĭv) *adj.* Of, relating to, or characterized by expectation.

ex-pect-ing (ĭk-spĕk'tĭng) *adj.* Pregnant.

ex-pec-to-rant (ĭk-spĕk'tər-ənt) *adj.* Promoting or facilitating secretion or expulsion from the mucous membrane of the air passages. —*n.* An expectorant medicine.

Case 1:04-cv-00204-JJF Document 169-2 Filed 04/14/2005 Page 31 of 50

accelerator of a motor vehicle) to the floor. **4.** To stun; overwhelm. [ME *flor* < OE *flōr.*] —**floor'er** *n.*

floor·age (flôr'ĭj, flōr'-) *n.* Floor space.

floor·board (flôr'bôrd', flōr'bōrd') *n.* **1.** A board in a floor. **2.** The floor of a motor vehicle.

floor exercise *n. Sports.* An event in competitive gymnastics that consists of various tumbling maneuvers performed on a mat.

floor·ing (flôr'ĭng, flōr'-) *n.* **1.** A floor. **2.** Material, such as lumber or tile, used in making floors.

floor lamp *n.* A tall lamp with a base that stands on the floor.

floor leader *n.* The member of a legislature chosen by fellow party members to be in charge of the party's activities on the floor.

floor manager *n.* **1.** A floorwalker. **2.** A person who is in charge of directing something, as activities at a political convention, from the floor.

floor plan *n.* A scale diagram of a room or building drawn as if seen from above.

floor sample *n.* Merchandise sold at a reduced price because it has been a display or demonstration model.

floor show *n.* A series of entertainments presented in a nightclub.

floor·walk·er (flôr'wô'kər, flōr'-) *n.* An employee of a department store who supervises sales personnel and assists customers.

floo·zy also **floo·zie** (flōō'zē) *n., pl.* **-zies.** *Slang.* A slovenly or vulgar woman, esp. a prostitute. [Orig. unknown.]

flop (flŏp) *v.* **flopped, flop·ping, flops.** —*intr.* **1.** To fall down heavily and noisily. **2.** To move about in a clumsy or relaxed way. **3.** *Informal.* To fail utterly. **4.** *Slang.* To go to bed. —*tr.* To cause to fall down heavily and noisily. —*n.* **1.** The action of flopping. **2.** The sound of flopping. **3.** *Informal.* An utter failure. [Alteration of FLAP.] —**flop'per** *n.*

flop·house (flŏp'hous') *n.* A cheap hotel or boarding house.

flop·py (flŏp'ē) *adj.* **-pi·er, -pi·est.** Tending to flop; loose and flexible. —**flop'pi·ly** *adv.* —**flop'pi·ness** *n.*

floppy disk *n. Computer Sci.* A flexible plastic disk coated with magnetic material used to store computer data.

flo·ra (flôr'ə, flōr'ə) *n., pl.* **-ras** or **flo·rae** (flôr'ē', flōr'ē'). **1.** Plants collectively, esp. the plants of a particular region or time. **2.** A treatise describing the plants of a region or time. [< FLORA.]

Flo·ra (flôr'ə, flōr'ə) *n. Rom. Myth.* The goddess of flowers. [Lat. *Flora* < *flos,* flower.]

flo·rae (flôr'ē', flōr'ē') *n.* A plural of **flora.**

flo·ral (flôr'əl, flōr'-) *adj.* Of, pertaining to, or suggestive of a flower or flora. —**flo'ral·ly** *adv.*

floral envelope *n.* The perianth of a flower.

floral tube *n.* A tube in some plants that is formed by the basal fusion of the sepals, petals, and stamens.

flo·re·at·ed (flôr'ē·ā'tĭd, flōr'-) *adj.* Variant of **floriated.**

Flor·en·tine (flôr'ən·tēn', -tĭn', flōr'-) *adj.* **1.** Of or pertaining to the style of art and architecture that flourished in Florence, Italy, during the Renaissance. **2.** Often **florentine.** Having or characterizing a dull chased or rubbed finish. Used of gold. **3.** Prepared or served with spinach. [Lat. *Florentinus* < *Florentia,* Florence, Italy.]

flo·res·cence (flō·rĕs'əns, flə-) *n.* The condition, time, or period of blossoming. [NLat. *florescentia* < Lat. *florescens,* pr.part. of *florescere,* inchoative of *florere,* to bloom < *flos,* flower.] —**flo·res'cent** *adj.*

flo·ret (flôr'ĭt, flōr'-) *n.* A small flower, esp. one of the disk or ray flowers of a composite plant, such as a daisy. [ME *floret* < OFr. *florete,* dim. of *flor,* flower. —see FLOWER.]

flo·ri·at·ed also **flo·re·at·ed** (flôr'ē·ā'tĭd, flōr'-) *adj.* Decorated with floral designs. [< Lat. *flos, flor-,* flower.]

flo·ri·bun·da (flôr'ə·bŭn'də, flōr'-) *n.* Any of several hybrid roses bearing numerous single or double flowers. [NLat., fem. of *floribundus,* blossoming freely < Lat. *flos,* flower.]

flo·ri·cul·ture (flôr'ĭ·kŭl'chər, flōr'-) *n.* The cultivation of flowering plants. [Lat. *flos, flor-,* flower + CULTURE.] —**flo'ri·cul'tur·al** *adj.* —**flo'ri·cul'tur·al·ly** *adv.* —**flo'ri·cul'tur·ist** *n.*

flo·rid (flôr'ĭd, flōr'-) *adj.* **1.** Flushed with rosy color; ruddy. **2.** Heavily decorated or embellished; ornate: *a florid prose style.* **3.** *Archaic.* Healthy; blooming. **4.** *Obs.* Abounding in or covered with flowers. [Fr. *floride* < Lat. *floridus* < *florere,* to bloom < *flos,* flower.] —**flo·rid'i·ty** (flə·rĭd'ĭ·tē, flō-), **flor'id·ness** *n.* —**flor'id·ly** *adv.*

flo·rif·er·ous (flō·rĭf'ər·əs) *adj.* Bearing flowers, esp. in abundance. [Lat. *florifer,* bearing flowers : *flos,* flowes + *ferre,* to bear + -OUS.] —**flo·rif'er·ous·ly** *adv.* —**flo·rif'er·ous·ness** *n.*

flo·ri·gen (flôr'ə·jən, flōr'-) *n.* A plant hormone that stimulates the flowering of buds. [Lat. *flos, flor-,* flower + -GEN.] —**flor'i·gen'ic** (-jĕn'ĭk) *adj.*

flo·rin (flôr'ĭn, flōr'-) *n.* **1.** A former British coin worth two shillings. **2.** A guilder. **3. a.** A gold coin first issued at Florence, Italy, in 1252. **b.** Any of several former European gold coins similar to the Florentine florin. [ME < OFr. < Oltal. *fiorino* < *fiore,* flower < Lat. *flos,* flower.]

flo·rist (flôr'ĭst, flōr'-, flŏr'-) *n.* A person whose business is the raising or selling of flowers and ornamental plants. [Lat. *flos, flor-,* flower + -IST.]

flo·ris·tics (flō·rĭs'tĭks, flō-) *n.* The study of the numerical distribution of plants. —**flo·ris'tic** *adj.* —**flo·ris'ti·cal·ly** *adv.*

-florous *suff* Having a specified kind or number of flowers: *tubuliflorous.* [LLat. *-florus* < Lat. *flos,* flower.]

flos·cu·lus (flŏs'kyə·ləs) *n.* A floret. [Lat., dim. of *flos,* flower.]

floss (flôs, flŏs) *n.* **1.** Short or waste silk fibers. **2.** A soft, loosely twisted thread used in embroidery. **3.** A soft, silky fibrous substance, such as corn silk. —*v.* **flossed, floss·ing, floss·es.** —*tr.* To clean between (teeth) with dental floss. —*intr.* To use dental floss. [Perh. < Fr. *floche,* down < OFr. *flasche.*]

floss·y (flô'sē, flŏs'ē) *adj.* **-i·er, -i·est. 1.** Made of or resembling floss. **2.** *Slang.* Ostentatiously stylish; flashy.

flo·tage also **float·age** (flō'tĭj) *n.* **1.** Flotation (sense 1). **2.** Floating objects or material.

flo·ta·tion also **float·a·tion** (flō·tā'shən) *n.* **1.** The act or condition of floating. **2.** An act or instance of launching or financing a business venture by selling an issue of stocks or bonds. **3.** Any of several processes in which different materials, notably minerals, are separated by agitation of a pulverized mixture of the materials with water, oil, and chemicals that cause differential wetting of the suspended particles, the unwetted particles being carried by air bubbles to the surface for collection.

flo·til·la (flō·tĭl'ə) *n.* **1. a.** A fleet of small ships. **b.** A small fleet of ships. **2.** A group resembling a small fleet: *a flotilla of taxis.* [Sp., dim. of *flota,* fleet < OFr. *flote* < ON *floti.*]

flot·sam (flŏt'səm) *n.* **1.** Wreckage or cargo that remains afloat after a ship has sunk. **2. a.** Discarded odds and ends. **b.** Unemployed and vagrant people; drifters. [AN *floteson* < OFr. *floter,* to float, of Germanic orig.]

Usage: *Flotsam,* in maritime law, applies to wreckage or cargo left floating on the sea after a shipwreck. *Jetsam* applies to cargo or equipment thrown overboard (jettisoned) from a ship in distress and either sunk or washed ashore. The common phrase *flotsam and jetsam* is now used loosely to describe any objects found floating or washed ashore.

flounce[1] (flouns) *n.* A strip of gathered or pleated material attached along its upper edge to another surface, as on a garment or curtain. —*tr.v.* **flounced, flounc·ing, flounc·es.** To trim with a flounce. [Alteration of *frounce* < ME, pleat < OFr. *fronce.*]

flounce[2] (flouns) *intr.v.* **flounced, flounc·ing, flounc·es. 1.** To move with exaggerated motions: *flounced out of the house.* **2.** To flounder or struggle. —*n.* The act or motion of flouncing. [Poss. of Scand. orig.]

floun·der[1] (floun'dər) *intr.v.* **-dered, -der·ing, -ders. 1.** To make clumsy attempts to move or to regain one's balance. **2.** To proceed clumsily and in confusion. —*n.* The act of floundering. —See Usage note at **founder.** [Prob. alteration of FOUNDER.]

floun·der[2] (floun'dər) *n.* Any of various marine flatfishes of the families Bothidae and Pleuronectidae, which include important food fishes. [ME, of Scand. orig.]

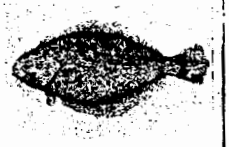

flounder[2]

flour (flour) *n.* **1.** A soft, fine, powdery substance obtained by grinding and sifting the meal of a grain, esp. wheat. **2.** A soft, fine powder. —*tr.v.* **floured, flour·ing, flours. 1.** To cover or coat with flour. **2.** To make into flour. [ME. —see FLOWER.] —**flour'y** *adj.*

flour·ish (flûr'ĭsh, flŭr'-) *v.* **-ished, -ish·ing, -ish·es.** —*intr.* **1.** To grow well or luxuriantly; thrive. **2.** To fare well; prosper: *"No village on the railroad failed to flourish"* (John Kenneth Galbraith). **3.** To be in one's prime. **4.** To make bold, sweeping movements. —*tr.* To wield, wave, or exhibit dramatically: *flourish a baton.* —*n.* **1.** An act or instance of waving or brandishing. **2.** An embellishment or ornamentation, esp. in writing. **3.** A dramatic action or gesture. **4.** A musical fanfare or similar passage. [ME *florishen* < OFr. *florir, floriss-,* to bloom < VLat. **florire* < Lat. *florere* < *flos,* flower.] —**flour'ish·er** *n.*

flout (flout) *v.* **flout·ed, flout·ing, flouts.** —*tr.* To show contempt for; scorn. —*intr.* To be scornful. —*n.* A contemptuous action or remark; insult. —See Usage note at **flaunt.** [Prob. < ME *flouten,* to play the flute < OFr. *flauter* < *flaute,* flute.] —**flout'er** *n.* —**flout'ing·ly** *adv.*

flow (flō) *v.* **flowed, flow·ing, flows.** —*intr.* **1.** To move or run freely in the manner characteristic of a fluid. **2.** To circulate, as the blood in the body. **3.** To discharge a stream; pour forth. **4.** To move with a continual shifting of the component particles: *Wheat flowed into the bin.* **5.** To proceed steadily and easily: *The preparations flowed smoothly.* **6.** To appear smooth, harmonious, or graceful. **7.** To rise. Used of the tide. **8.** To arise; derive: *Several conclusions flow from this hypothesis.* **9. a.** To abound or be plentiful. **b.** To overflow or flood. **10.** To hang loosely and gracefully: *The cape flowed from his shoulders.* **11.** To undergo plastic deformation without cracking or breaking. —*tr.* **1.** To release as a flow. **2.** To cause to flow. —*n.* **1. a.** The smooth motion characteristic of fluids. **b.** The act of flowing. **2.** A stream. **3. a.** A continuous output or outpouring: *a flow of ideas.* **b.** A continuous movement or circulation: *the flow of traffic.* **4.** The amount that flows in a given period of time. **5.** A rising and overflowing, esp. of dry land, of a body of water. **6.** Continuity and smoothness of appearance. **7.** Menstrual

Case 1:04-cv-00204-JJF Document 169-2 Filed 04/14/2005 Page 32 of 50

discharge. **8.** The rising of the tide. [ME *flouen* < OE *flōwan*.] —**flow'ing-ly** *adv.*

flow·age (flō'ij) *n.* **1.** The act of flowing or overflowing. **2.** The state of being flooded. **3.** A liquid that flows or overflows. **4.** The gradual plastic deformation of a solid body, as by heat.

flow chart *n.* A schematic representation of a sequence of operations.

flow diagram *n.* A flow chart.

flow·er (flou'ər) *n.* **1. a.** The reproductive structure of a seed-bearing plant, characteristically having specialized male and female organs, such as stamens and a pistil, enclosed in an outer envelope of petals and sepals. **b.** Such a structure having showy or colorful parts; blossom. **c.** A reproductive organ of other plants such as mosses. **2.** A plant cultivated or conspicuous for its blossoms. **3.** The period of highest development; peak. **4.** The highest example or best representative of something: *the flower of our generation.* **5.** An embellishment. **6. flowers.** *Chem.* A fine powder produced by condensation or sublimation. —*v.* **-ered, -er·ing, -ers.** —*intr.* **1.** To produce a flower; blossom. **2.** To develop fully; peak. —*tr.* To decorate with flowers or with a floral pattern. [ME *flour* < OFr. *flor* < Lat. *flos.*] —**flow'er·er** *n.* —**flow'er·less** *adj.*

flow·er·age (flou'ər-ij) *n.* **1.** Flowers collectively. **2.** The process or state of flowering.

flower bug *n.* Any of a group of bugs from the family Anthocoridae that feed on insects that infest flowers.

flow·er·et (flou'ər-it) *n.* A small flower.

flower girl *n.* A very young girl who carries flowers in a procession, esp. at a wedding.

flowering dogwood *n.* The dogwood.

flowering maple *n.* Any of several tropical shrubs of the genus *Abutilon*, esp. *A. hybridum*, having lobed leaves resembling those of the maple and variously colored flowers.

flowering plant *n.* An angiosperm.

flowering quince *n.* Any of several shrubs of the genus *Chaenomeles*, native to Asia, having spiny branches and red or pink flowers.

flow·er-pot (flou'ər-pŏt') *n.* A pot in which plants are grown.

flow·er·y (flou'ə-rē) *adj.* **-i·er, -i·est. 1.** Abounding in or bedecked with flowers. **2.** Suggestive of flowers. **3.** Full of figurative and ornate expressions: *a flowery speech.* —**flow'er·i·ness** *n.*

flow meter *n.* An apparatus for monitoring, measuring, or recording fluid flow, as of a gaseous fuel.

flown[1] (flōn) *adj. Archaic.* Filled to excess. [Obs. p.part. of FLOW.]

flown[2] (flōn) *v.* Past participle of **fly**[1].

flow sheet *n.* A flow chart.

flu (flōō) *n. Informal.* Influenza.

flub (flŭb) *tr.v.* **flubbed, flub·bing, flubs.** To botch or bungle. —*n.* An act or instance of flubbing. —**flub'ber** *n.*

flub-dub (flŭb'dŭb') *n. Slang.* Pretentious nonsense; bunkum. [Orig. unknown.]

fluc·tu·ant (flŭk'chōō-ənt) *adj.* Variable or unstable. [Lat. *fluctuans, fluctuant-*, pr.part. of *fluctuare*, to fluctuate.]

fluc·tu·ate (flŭk'chōō-āt') *v.* **-at·ed, -at·ing, -ates.** —*intr.* **1.** To vary irregularly: *prices fluctuating dramatically.* **2.** To rise and fall like waves; undulate. —*tr.* To cause to fluctuate. [Lat. *fluctuare, fluctuat-* < *fluctus*, a flowing < p.part. of *fluere*, to flow.] —**fluc'tu·a'tion** *n.*

flue[1] (flōō) *n.* **1.** A pipe, tube, or channel through which hot air, gas, steam, or smoke may pass. **2. a.** A flue pipe. **b.** The air passage in such a pipe. [Orig. unknown.]

flue[2] (flōō) *n.* One of several kinds of fishing net. [ME < MDu. *vlūwe.*]

flu·ent (flōō'ənt) *adj.* **1.** Having facility in the use of language: *fluent in three languages.* **2. a.** Flowing effortlessly; polished. **b.** Flowing smoothly; graceful: *fluent curves.* **3.** Flowing or capable of flowing; fluid. [Lat. *fluens, fluent-*, pr.part. of *fluere*, to flow.] —**flu'en·cy** *n.* —**flu'ent·ly** *adv.*

flue pipe *n.* An organ pipe sounded by means of a current of air striking a lip in the side of the pipe and causing the air within to vibrate.

flu·er·ic (flōō-ĕr'ĭk) *adj.* Fluidic. [Lat. *fluere*, to flow + -IC.]

flu·er·ics (flōō-ĕr'ĭks) *n.* Fluidics.

fluff (flŭf) *n.* **1.** Light down or nap. **2.** Something having a light, soft, or frothy consistency or appearance. **3.** Something of little consequence. **4.** *Informal.* An error, esp. in the delivery of lines, as by an actor or announcer. —*v.* **fluffed, fluff·ing, fluffs.** —*tr.* **1.** To make light and puffy by shaking or patting into a soft, loose mass: *fluff a pillow.* **2.** *Informal.* **a.** To ruin or mar by an error. **b.** To misread or forget (one's lines). —*intr.* **1.** To become soft and puffy or feathery. **2.** *Informal.* To make an error, esp. to forget or botch one's lines. [Orig. unknown.]

fluff·y (flŭf'ē) *adj.* **-i·er, -i·est. 1.** Of, like, or covered with fluff or down. **2.** Light and airy; soft: *fluffy curls.* —**fluff'i·ly** *adv.* —**fluff'i·ness** *n.*

flü·gel·horn (flōō'gəl-hôrn', flŭ'-) *n.* A bugle with valves, similar to the cornet but having a wider bore. [G. : *Flügel*, flank (from its use to summon flanks during a battle) + *Horn.*]

flu·id (flōō'ĭd) *n.* A substance that exists or is regarded as existing as a continuum characterized by low resistance to flow and the tendency to assume the shape of its container. —*adj.* **1.** Characteristic of a fluid, esp. flowing easily. **2.** Used in the measurement of fluids. **3.** Readily deformed; pliable. **4.** Smooth and effortless. **5.** Easily changed or tending to change: *a fluid situation fraught with uncertainty.* **6.** Convertible into cash: *fluid assets.* [Fr. *fluide* < Lat. *fluidus*, flowing < *fluere*, to flow.] —**flu·id'i·ty** (-id'ĭ-tē), **flu'id·ness** *n.* —**flu'id·ly** *adv.*

fluid dram *n.* One-eighth of a fluid ounce.

flu·id-ex·tract (flōō'ĭd-ĕk'străkt') *n.* A concentrated alcohol solution of a vegetable drug containing the equivalent of one gram in powdered form of the active principle in each milliliter.

flu·id·ic (flōō-ĭd'ĭk) *adj.* Of, pertaining to, or being a device operated by fluids. —**flu·id'ĭc** *n.*

flu·id·ics (flōō-ĭd'ĭks) *n. (used with a sing. verb).* The technology of fluids used as nonmoving, nonelectrical components of control and sensing systems.

fluid ounce *n.* **1.** A unit of volume or capacity in the U.S. Customary System, used in liquid measure, equal to 1.804 cubic inches. **2.** A unit of volume or capacity in the British Imperial System, used in liquid and dry measure, equal to 1.734 cubic inches.

fluke[1] (flōōk) *n.* **1.** *pl.* **fluke.** Any of various flatfishes, esp. a flounder of the genus *Paralichthys.* **2.** A trematode. [ME < OE *flōc.*]

fluke[2] (flōōk) *n.* **1.** The triangular blade at the end of either arm of an anchor, designed to catch in the ground. **2.** A barbed head, as on an arrow. **3.** One of the two horizontally flattened divisions of the tail of a whale or related animal. [Poss. < FLUKE[1].]

fluke[3] (flōōk) *n.* **1.** An accidentally good or successful stroke in billiards or pool. **2.** A stroke of good luck. [Orig. unknown.]

fluk·y also **fluk·ey** (flōō'kē) *adj.* **-i·er, -i·est. 1.** Resulting from mere chance. **2.** Constantly shifting; uncertain: *a fluky wind.* [< FLUKE[3].]

flume (flōōm) *n.* **1.** A narrow defile or gorge, usually with a stream flowing through it. **2.** An artificial channel or chute for a stream of water. [ME *flum*, river < OFr. < Lat. *flumen* < *fluere*, to flow.]

flum·mery (flŭm'ə-rē) *n., pl.* **-ies. 1. a.** Any of several soft, light, bland foods, such as a custard. **b.** A soft jelly made by straining boiled, slightly fermented oatmeal or flour. **2.** Meaningless flattery or nonsense; humbug. [Welsh *llymru.*]

flum·mox (flŭm'əks) *tr.v.* **-moxed, -mox·ing, -mox·es.** *Slang.* To confuse; perplex. [Orig. unknown.]

flung (flŭng) *v.* Past tense and past participle of **fling.**

flunk (flŭngk) *Informal.* —*v.* **flunked, flunk·ing, flunks.** —*intr.* To fail esp. in an examination or course. —*tr.* **1.** To fail (an examination or course). **2.** To give a failing grade to. —*phrasal verb.* **flunk out.** To expel or be expelled from a school or course because of work that does not meet required standards. —*n.* A failing grade. [Orig. unknown.]

flun·ky also **flun·key** (flŭng'kē) *n., pl.* **-kies** also **-keys. 1.** A liveried manservant. **2.** An obsequious or fawning person; toady. **3.** A person who does menial or trivial work. [Sc.] —**flun'ky·ism** *n.*

flu·or (flōō'ôr', -ər) *n.* Fluorite. [NLat., mineral belonging to a group used as fluxes < Lat., a flowing < *fluere*, to flow.]

fluor- *pref.* Variant of **fluoro-.**

flu·o·resce (flōō'ə-rĕs', flō-rĕs') *intr.v.* **-resced, -resc·ing, -resc·es.** To undergo, produce, or show fluorescence. [Back-formation < FLUORESCENCE.]

flu·o·res·ce·in (flōō'ə-rĕs'ē-ĭn, flō-rĕs'-) *n.* An orange-red compound, $C_{20}H_{12}O_5$, that exhibits intense fluorescence in alkaline solution and is used to dye sea water for spotting or tracing operations.

flu·o·res·cence (flōō'ə-rĕs'əns, flō-rĕs'-) *n.* **1.** The emission of electromagnetic radiation, esp. of visible light, resulting from the absorption of incident radiation and persisting only as long as the stimulating radiation is continued. **2.** The radiation emitted by fluorescence. [FLUOR + -ESCENCE.]

fluorescence microscopy *n.* Microscopy in which the specimens are stained with a fluorescent dye and viewed by illumination with ultraviolet light.

flu·o·res·cent (flōō'ə-rĕs'ənt, flō-rĕs'-) *adj.* Exhibiting or capable of exhibiting fluorescence.

fluorescent lamp *n.* A lamp that produces visible light by fluorescence, esp. a glass tube whose inner wall is coated with a material that fluoresces when bombarded with secondary radiation generated by a gaseous discharge within the tube.

fluor·i·date (flôr'ĭ-dāt', flōr'-, flōr'-) *tr.v.* **-dat·ed, -dat·ing, -dates.** To add a fluorine compound to (a water supply, for example) for the purpose of preventing tooth decay. —**fluor'i·da'tion** *n.*

flu·o·rids (flōō'ə-rĭd', flōōr'ĭd', flō-rĭd'-, flōr'-) *n.* A binary compound of fluorine with another element.

fluor·i·na·tion (flôr'ĭ-nā'shən, flōr'-, flōr'-) *n.* The chemical introduction of fluorine into a compound.

flu·o·rine (flōō'ə-rēn', -rĭn, flōōr'ēn', -ĭn, flôr'-, flōr'-) *n. Symbol* **F** A pale-yellow, highly corrosive, poisonous, gaseous halogen element, the most electronegative and most

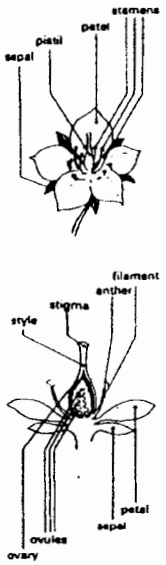

flower
Flower (*above*) and cross section showing details

reactive of all t
trially importa
weight 18.998
–188.14°C; sp
[FLUOR + -INE
fluor·ite (flōōr'
green, blue, vi
scentially CaF_2.
[Ital.]
fluoro- or **flu**
cence: *fluoresc*
flu·o·ro·car·bo
ious inert orga
drogen, used
and lubricants
fluor·o·chrom
fluorescent dy
be examined b
flu·o·rom·e·ter
ment for dete
rom'e·try *n.*
fluor·o·scope
fluorescent scr
tically opaque
tinuously view
object. —*tr.v.*
interior of wit
adj. —**fluor'o·s**
flu·o·ros·co·py
with the use of
flu·o·ro·sis (flō
tion caused by
chiefly by mot
flu·o·ro·u·ra·cil
dine, $C_4H_3FN_2$
flu·or·spar (flō
flur·ry (flûr'ē, fl
2. A light snow
ment, or bustli
active trading.
-ries. —*tr.* To
—*intr.* To mov
flurr, to scatter
flush[1] (flŭsh)
flow and sprea
red in the face;
4. a. To be cle
function by me
1. To cause to
a feeling of pr
3. To wash, en
water. —*n.* **1.**
water. **2.** A blu
fever. **4.** A feeli
freshness or vi
1. Having a h
dance; plentifu
affluent. **4.** Liv
in the same pl
surfaces, or ed
wall. **c.** With n
rect, straightfor
be even, in one
or solidly: *The*
dart out.]
flush[2] (flŭsh) *n*
same suit, ratec
game such as p
flush[3] (flŭsh) *v.*
(a game bird, f
or fly from cov
taking flight. [I
flus·ter (flŭs'tər
or become ner
fusion, or excit
flute (flōōt) *n.*
wind family, t
keys on the sid
as in the recor
2. An organ st
3. *Archit.* One
the shaft of a
cloth, as in a p
1. To play (a t
tone. **3.** To ma
sing or whistle
—**flut'er** *n.*
flut·ing (flōō'tĭ
series of long,
cised in the su
narrow pleats
or making groo
flut·ist (flōō'tĭst
flut·ter (flŭt'ər)
flap rapidly in
breeze. **2. a.** T

p pop / r roar / s
th vision / ə abo

Case 1:04-cv-00204-JJF Document 169-2 Filed 04/14/2005 Page 33 of 50

quality or condition of being improbable. **2.** Something improbable.

im·prob·a·ble (ĭm-prŏb'ə-bəl) *adj.* Unlikely to take place or to be true; doubtful. [Lat. *improbabilis* : *in-*, not + *probabilis*, probable.] —**im·prob'a·ble·ness** *n.* —**im·prob'a·bly** *adv.*

im·pro·bi·ty (ĭm-prō'bĭ-tē) *n.* Lack of probity; dishonesty. [ME *improbite* < Lat. *improbitas* < *improbus*, dishonest : *in-*, not + *probus*, honest, good.]

im·promp·tu (ĭm-prŏmp'to͞o, -tyo͞o) *adj.* Performed or conceived without rehearsal or preparation: *an impromptu speech.* —*adv.* Spontaneously. —*n.* **1.** Something made or done impromptu, as a speech. **2.** *Mus.* A short lyrical composition esp. for the piano. [Fr. < Lat. *in promptu*, at hand : *in*, in + *promptus*, ready. —see PROMPT.]

im·prop·er (ĭm-prŏp'ər) *adj.* **1.** Not suited to circumstances or needs; unsuitable: *received improper care.* **2.** Not in keeping with conventional mores; indecorous. **3.** Not consistent with truth, fact, or rule; incorrect. **4.** Irregular or abnormal, as in form. [OFr. *impropre* < Lat. *improprius* : *in-*, not + *proprius*, proper.] —**im·prop'er·ly** *adv.* —**im·prop'er·ness** *n.*

Synonyms: *improper, unbecoming, unseemly, indelicate, indecent, indecorous.* These adjectives mean in violation of accepted standards of what is right or proper. *Improper* can apply to any act or statement contrary to such standards, but often refers to unethical conduct, violation of etiquette, or morally offensive behavior. *Unbecoming* suggests what is beneath the standard implied by one's character or position. What is *unseemly* or *indelicate* violates good taste; *indelicate* suggests immodesty, coarseness, or tactlessness. *Indecorous*, the weakest of these terms, implies violation of the manners of polite society.

improper fraction *n.* A fraction in which the numerator is larger than or equal to the denominator.

improper integral *n.* An integral having at least one nonfinite limit or having an integrand that becomes infinite between the limits of integration.

im·pro·pri·e·ty (ĭm'prə-prī'ĭ-tē) *n., pl.* **-ties. 1.** The quality or condition of being improper. **2.** An improper act. **3.** An improper or unacceptable usage in speech or writing.

im·prove (ĭm-pro͞v') *v.* **-proved, -prov·ing, -proves.** —*tr.* **1.** To advance to a better state or quality; make better. **2.** To increase the productivity or value of (land). —*intr.* **1.** To become or get better. **2.** To make beneficial additions or changes: *improve on the translation.* [ME *improven*, to enclose land for cultivation < AN *emprouwer* : OFr. *en-* (causative) + *prou*, profit < LLat. *prode*, advantageous. —see PROUD.]

Synonyms: *improve, better, help, ameliorate, enhance.* These verbs mean to make more attractive or desirable in some respect. *Improve*, the most general term, refers to an act of raising in quality or value or of relieving an undesirable situation. *Better* is often interchangeable with *improve* in the preceding senses; used reflexively, *better* implies worldly gain: *better himself by changing jobs. Help* usually implies limited relief or change for the better: *medicine that helped her. Ameliorate* refers to improving or bettering conditions that cry out for change. *Enhance*, in contrast, suggests adding to something already attractive or worthy and thus increasing its value.

im·prove·ment (ĭm-pro͞v'mənt) *n.* **1.** The act or procedure of improving. **2.** The state of being improved. **3.** A change or addition that improves.

im·prov·i·dent (ĭm-prŏv'ĭ-dənt) *adj.* **1.** Not providing for the future; thriftless. **2.** Rash; incautious. —**im·prov'i·dence** *n.* —**im·prov'i·dent·ly** *adv.*

im·pro·vi·sa·tion (ĭm-prŏv'ĭ-zā'shən, ĭm'prə-vī-) *n.* **1.** The act of improvising. **2.** Something improvised, esp. a dramatic skit.

im·prov·i·sa·tor (ĭm-prŏv'ĭ-zā'tər) *n.* One who improvises.

im·prov·i·sa·to·ry (ĭm-prŏv'ĭ-zə-tôr'ē, ĭm'prə-vī'zə-tôr'ē, -tōr'ē) also **im·prov·i·sa·to·ri·al** (ĭm-prŏv'ĭ-zə-tôr'ē-əl, -tōr'ē-əl) *adj.* **1.** Of or pertaining to improvisation. **2.** Of or pertaining to an improviser.

im·pro·vise (ĭm'prə-vīz') *v.* **-vised, -vis·ing, -vis·es.** —*tr.* **1.** To invent, compose, or recite without preparation. **2.** To make or provide from available materials. —*intr.* To invent, compose, recite, or execute something offhand. [Fr. *improviser* < Ital. *improvvisare* < *improvviso*, unforeseen < Lat. *improvisus* : *in-*, not + *provisus*, p.part. of *providere*, to foresee. —see PROVIDE.] —**im'pro·vis'er** *n.*

im·pru·dence (ĭm-pro͞od'ns) *n.* **1.** The quality or condition of being imprudent. **2.** An imprudent act.

im·pru·dent (ĭm-pro͞od'ənt) *adj.* Not prudent; unwise or indiscreet. [ME < Lat. *imprudens* : *in-*, not+ *prudens*, prudent.]

im·pu·dence (ĭm'pyə-dəns) also **im·pu·den·cy** (-dən-sē) *n.* **1.** The quality of being impudent. **2.** Impudent behavior.

im·pu·dent (ĭm'pyə-dənt) *adj.* **1.** Characterized by brash behavior or impertinent disrespect. **2.** *Obs.* Immodest. [ME < Lat. *impudens* : *in-*, not + *pudens*, pr.part. of *pudēre*, to be ashamed.] —**im'pu·dent·ly** *adv.*

im·pu·dic·i·ty (ĭm'pyo͞o-dĭs'ĭ-tē) *n.* Immodesty; shamelessness. [OFr. *impudicite* < Lat. *impudicus*, immodest : *in-*, not + *pudicus*, modest < *pudēre*, to be ashamed.]

im·pugn (ĭm-pyo͞n') *tr.v.* **-pugned, -pugn·ing, -pugns.** To oppose or attack as false, esp. to criticize or refute by argumentation. [ME *impugnen* < OFr. *impugner* < Lat. *impugnare*, to fight against : *in-*, against + *pugnare*, to fight.] —**im·pugn'a·ble** *adj.* —**im·pugn'er** *n.*

im·pu·is·sance (ĭm-pyo͞o'ĭ-səns, ĭm-pwĭs'əns) *n.* Lack of power or effectiveness; weakness. —**im·pu'is·sant** *adj.*

im·pulse (ĭm'pŭls') *n.* **1. a.** An impelling force. **b.** The motion produced by such a force. **2. a.** A sudden spontaneous inclination or urge: *had an impulse to tell him off.* **b.** A motivating force; incentive: *questioned the impulse behind the reorganization plan.* **3. a.** An inherent propensity, usually of a nonrational nature: *"Respect for the liberty of others is not a natural impulse in most men"* (Bertrand Russell). **b.** A general tendency or spirit; current: *can hear the romantic impulse in all his music.* **4.** *Electronics.* A short-term change in the intensity of a medium. **5.** *Physics.* The product of the average value of a force with the time during which it acts, equal in general to the change in momentum produced by the force in this time interval. **6.** *Physiol.* An instance of the transmission of energy from one neuron to another. [Lat. *impulsus* < p.part. of *impellere*, to impel. —see IMPEL.]

im·pul·sion (ĭm-pŭl'shən) *n.* **1.** The act of impelling or the condition of being impelled. **2.** An impelling force; thrust. **3.** Motion produced by an impelling force; momentum. **4.** An urging; compulsion: *"I do not move . . . unless it be under the impulsion of a third party"* (Samuel Beckett).

im·pul·sive (ĭm-pŭl'sĭv) *adj.* **1.** Inclined to act on impulse rather than thought. **2.** Produced as a result of impulse; precipitate: *an impulsive act.* **3.** Having force or power to impel or incite; forceful. **4.** *Physics.* Acting within brief time intervals. Used esp. of a force. —**im·pul'sive·ly** *adv.* —**im·pul'sive·ness** *n.*

im·pu·ni·ty (ĭm-pyo͞o'nĭ-tē) *n., pl.* **-ties.** Exemption from punishment, penalty, or harm. [Lat. *impunitas* < *impunis*, not punished : *in-*, not + *poena*, penalty < Gk. *poinē*.]

im·pure (ĭm-pyo͝or') *adj.* **1.** Not pure or clean; contaminated. **2.** Not purified by religious rite; defiled. **3.** Immoral or obscene. **4.** Mixed with another and usually inferior substance; adulterated. **5.** Being a composite of more than one color or mixed with black or white. Used of color. **6.** Deriving from more than one source, style, or convention; bastardized. Used esp. of the arts. **7.** Not proper or consistent in grammar, vocabulary, idiom, or other usage. —**im·pure'ly** *adv.* —**im·pure'ness** *n.*

im·pu·ri·ty (ĭm-pyo͝or'ĭ-tē) *n., pl.* **-ties. 1.** The quality or condition of being impure, esp.: **a.** Contamination or pollution. **b.** Lack of consistency or homogeneity; adulteration. **c.** A state of immorality; sin. **2.** Something that renders something else impure; contaminant.

im·put·a·ble (ĭm-pyo͞o'tə-bəl) *adj.* Capable of being ascribed or imputed; attributable. —**im·put'a·bly** *adv.*

im·pu·ta·tion (ĭm'pyo͞o-tā'shən) *n.* **1.** The act of imputing **2.** Something imputed or ascribed. —**im·pu'ta·tive** (ĭm-pyo͞o'tə-tĭv) *adj.* —**im·pu'ta·tive·ly** *adv.*

im·pute (ĭm-pyo͞ot') *tr.v.* **-put·ed, -put·ing, -putes. 1.** To ascribe (a crime or fault) to another. **2.** To attribute to a cause or source. **3.** To attribute (wickedness or merit) to a person as transmitted by another. [ME *imputen* < OFr. *emputer* < Lat. *imputare*, to charge : *in-*, in + *putare*, to reckon, compute.]

in (ĭn) *prep.* **1. a.** Within the limits, bounds, or area of: *was hit in the face, in the spring, in the garden.* **b.** From the outside to a point within; into: *threw the letter in the garbage can.* **2.** To or at a situation or condition of: *was split in two; in debt; in love.* **3. a.** Having the activity, occupation, or function of: *in politics; in command.* **b.** During the act or process of: *tripped in racing for the bus.* **4. a.** With the arrangement or order of: *fell in luxuriant folds, in equal payments.* **b.** After the style or form of: *in iambic pentameter.* **5. a.** With the characteristic, attribute, or property of: *a tall man in an afro.* **b.** Used to indicate a material or element from which something is made: *a statue in bronze.* **6.** With the aim or purpose of: *went in search of a dictionary.* **7.** By the instrumentality or means of: *paneled the library in walnut.* **8.** With reference to: *six inches in depth.* **9.** Used to indicate the second and larger term of a ratio or proportion: *saved only one in ten.* —*adv.* **1.** To or toward the inside: *He stepped in.* **2.** To or toward a destination or goal: *The group closed in.* **3.** Into a usual place, as of business or residence: *He's not in.* **4. a.** In a position of success or favor. **b.** In a particular relationship: *in bad with her supervisor.* **5. a.** In fashion. **b.** In season. —*adj.* **1.** Very fashionable: *the in thing to wear.* **2.** Extremely concerned with or aware of the latest fashion: *a member of the in crowd.* **3.** Incoming; entering. **4.** Having power; incumbent. —*n.* **1.** One that has position, influence, or power. **2.** *Informal.* Influence; power. —***Idioms.*** **in for.** Guaranteed to get or have: *in for a shock.* **ins and outs.** **1.** The twists and turns, as of a roadway. **2.** The characteristic features and difficulties. **in that.** For the reason that. [ME < OE.]

In The symbol for the element indium.

in–[1] or **il–** or **im–** or **ir–** *pref.* Not: *inarticulate.* [ME < OFr. < Lat.]

in–[2] or **il–** or **im–** or **ir–** *pref.* **1.** In, into, within: *intubation.* **2.** En-[1]. [ME < OFr. < Lat. < *in*, in, within.]

–in *suff.* **1.** or **–ine.** A neutral chemical compound: *globulin.* **2.** Enzyme: *pancreatin.* **3. a.** A pharmaceutical: *niacin.*

Case 1:04-cv-00204-JJF Document 169-2 Filed 04/14/2005 Page 34 of 50

to break off : *inter-*, between + *rumpere*, to break.] —**in'ter-rup'tion** *n.* —**in'ter-rup'tive** *adj.*

in-ter-rupt-er (ĭn'tə-rŭp'tər) *n.* 1. One that interrupts. 2. *Elect.* A device for periodically and automatically opening or closing an electric circuit.

in-ter-scho-las-tic (ĭn'tər-skə-lăs'tĭk) *adj.* Existing or conducted between or among schools.

in-ter se (ĭn'tər sē', sā') *adv. & adj.* Between or among themselves. [Lat.]

in-ter-sect (ĭn'tər-sĕkt') *v.* **-sect-ed, -sect-ing, -sects.** —*tr.* 1. To cut across or through. 2. To form an intersection with. —*intr.* 1. To cut across or overlap each other. 2. To form an intersection. [Lat. *intersecare, intersect-* : *inter-*, between + *secare*, to cut.]

in-ter-sec-tion (ĭn'tər-sĕk'shən) *n.* 1. **a.** The act or process of intersecting. **b.** (*also* ĭn'tər-sĕk'-). A place where things intersect, esp. a place where two or more roads cross. 2. *Math.* **a.** The point or locus of points common to two or more geometric figures. **b.** A set every member of which is an element of each of two or more given sets.

in-ter-ses-sion (ĭn'tər-sĕsh'ən) *n.* The time between two academic sessions or semesters. —**in'ter-ses'sion-al** *adj.*

in-ter-sex (ĭn'tər-sĕks') *n.* An intersexual individual.

in-ter-sex-u-al (ĭn'tər-sĕk'shōō-əl) *adj.* 1. Existing or occurring between the sexes. 2. Having sexual characteristics intermediate between those of a typical male and a typical female. —**in'ter-sex'u-al'i-ty** (-ăl'ĭ-tē) *n.* —**in'ter-sex'u-al-ly** *adv.*

in-ter-space (ĭn'tər-spās') *tr.v.* **-spaced, -spac-ing, -spac-es.** To make or occupy a space between. —*n.* (ĭn'tər-spās'). A space between two things; interval. —**in'ter-spa'tial** (-spā'shəl) *adj.*

in-ter-spe-cif-ic (ĭn'tər-spĭ-sĭf'ĭk) *adj.* Arising between species.

in-ter-sperse (ĭn'tər-spûrs') *tr.v.* **-spersed, -spers-ing, -spers-es.** 1. To distribute among other things at intervals. 2. To supply or diversify with things distributed at intervals. [< Lat. *interspersus*, interspersed : *inter-*, between + *sparsus*, p.part. of *spargere*, to scatter.] —**in'ter-spers'ed-ly** (-spûr'sĭd-lē) *adv.* —**in'ter-sper'sion** (-spûr'zhən, -shən) *n.*

in-ter-state (ĭn'tər-stāt') *adj.* Pertaining to, existing between, or connecting two or more states. —*n.* One of a system of highways extending between or connecting U.S. cities or states.

in-ter-stel-lar (ĭn'tər-stĕl'ər) *adj.* Between or among the stars.

in-ter-stice (ĭn-tûr'stĭs) *n., pl.* **-sti-ces** (-stĭ-sēz', -sĭz). A space, esp. a small or narrow one, between things or parts. [Fr. < LLat. *interstitium* < Lat. *interstitus*, p.part. of *interstare*, to stand in the middle : *inter-*, between + *sistere*, to stand.]

in-ter-sti-tial (ĭn'tər-stĭsh'əl) *adj.* 1. Of, pertaining to, or occurring in interstices. 2. Affecting or based on interstices. —**in'ter-sti'tial-ly** *adv.*

in-ter-tex-ture (ĭn'tər-tĕks'chər) *n.* 1. **a.** The act of interweaving. **b.** The state of being interwoven. 2. Something that is interwoven.

in-ter-tid-al (ĭn'tər-tīd'l) *adj.* Of, pertaining to, or being the region between the extremes of high and low tide. —**in'ter-tid'al-ly** *adv.*

in-ter-tri-bal (ĭn'tər-trī'bəl) *adj.* Existing between tribes.

in-ter-trop-i-cal (ĭn'tər-trŏp'ĭ-kəl) *adj.* 1. Between or within the tropics. 2. Of or pertaining to the tropics.

in-ter-twine (ĭn'tər-twīn') *tr. & intr.v.* **-twined, -twin-ing, -twines.** To join by twining together. —**in'ter-twine'ment** *n.*

in-ter-twist (ĭn'tər-twĭst') *tr. & intr.v.* **-twist-ed, -twist-ing, -twists.** To intertwine.

in-ter-ur-ban (ĭn'tər-ûr'bən) *adj.* Pertaining to or connecting urban areas: *an interurban railroad.*

in-ter-val (ĭn'tər-vəl) *n.* 1. A space between two objects, points, or units. 2. The temporal duration between two specified instants, events, or states. 3. *Math.* **a.** A set consisting of all the numbers between a pair of given numbers. **b.** Such a set including the endpoints. **c.** Such a set not including the endpoints. **d.** A line segment representing such a set. **e.** A set of numbers greater than or less than a given number and including or excluding the given number. 4. *Chiefly Brit.* An intermission, as between acts of a play. 5. The difference in pitch between two musical tones. [ME *intervalle* < OFr. < Lat. *intervallum* : *inter-*, between + *vallum*, rampart.]

in-ter-vale (ĭn'tər-vāl') *n. Regional.* A tract of low-lying land, esp. along a river. [Obs. *intervale*, alteration of INTERVAL.]

in-ter-vene (ĭn'tər-vēn') *intr.v.* **-vened, -ven-ing, -venes.** 1. To enter or occur as an extraneous condition or characteristic. 2. To come, appear, or lie between two things. 3. To occur or come between periods or points of time. 4. To come in or between so as to hinder or modify: *intervened to prevent a fight.* 5. To interfere, usually through force or threat of force, in the affairs of another nation. 6. *Law.* To enter into a suit as a third party for the protection of an alleged interest. [Lat. *intervenire* : *inter-*, between + *venire*, to come.] —**in'ter-ven'er** *n.* —**in'ter-ven'tion** (-vĕn'shən) *n.*

in-ter-ven-tion-ism (ĭn'tər-vĕn'shə-nĭz'əm) *n.* The policy or practice of intervening in the affairs of another sovereign state. —**in'ter-ven'tion-ist** *n.*

in-ter-ver-te-bral (ĭn'tər-vûr'tə-brəl, -vûr-tē'-) *adj.* Located between vertebrae. —**in'ter-ver'te-bral-ly** *adv.*

intervertebral disk *n.* A broad disk of fibrocartilage situated between adjoining vertebrae of the spinal column.

in-ter-view (ĭn'tər-vyōō') *n.* 1. A formal face-to-face meeting, esp. one arranged for the assessment of the qualifications of an applicant, as for employment or admission. 2. **a.** A conversation, as one conducted by a reporter, in which facts or statements are elicited from another. **b.** An account or reproduction of such a conversation. —*v.* **-viewed, -view-ing, -views.** —*tr.* To obtain an interview from. —*intr.* To have an interview: *interviewed with a publishing company.* [Fr. *entrevue* < *entrevu*, p.part. of *entrevoir*, to see : *entre-*, between (< Lat. *inter-*) + *voir*, to see < Lat. *vidēre*.] —**in'ter-view-ee'** *n.* —**in'ter-view'er** *n.*

in-ter vi-vos (ĭn'tər vē'vōs', vī'-) *adj.* Between living persons: *an inter vivos gift.* [Lat.]

in-ter-vo-cal-ic (ĭn'tər-vō-kăl'ĭk) *adj.* Immediately followed and immediately preceded by a vowel.

in-ter-volve (ĭn'tər-vŏlv') *tr. & intr.v.* **-volved, -volv-ing, -volves.** To intertwine.

in-ter-weave (ĭn'tər-wēv') *v.* **-wove** (-wōv'), **-wo-ven** (-wō'vən), **-weav-ing, -weaves.** —*tr.* 1. To weave together. 2. To blend together; intermix. —*intr.* To intertwine.

in-tes-tate (ĭn-tĕs'tāt', -tĭt) *adj.* 1. Having made no legal will. 2. Not disposed of by a legal will. —*n.* One who dies without a legal will. [ME < OFr. *intestat* < Lat. *intestatus* : *in-*, not + *testatus*, testate.] —**in-tes'ta-cy** (-tə-sē) *n.*

in-tes-ti-nal (ĭn-tĕs'tə-nəl) *adj.* Of, pertaining to, or constituting the intestine. —**in-tes'ti-nal-ly** *adv.*

intestinal fortitude *n.* Courage; endurance.

in-tes-tine (ĭn-tĕs'tĭn) *n.* The portion of the alimentary canal extending from the stomach to the anus. [Lat. *intestinum* < *intestinus*, internal < *intus*, within.]

in-thrall (ĭn-thrôl') *v.* Variant of **enthrall.**

in-throne (ĭn-thrōn') *v.* Variant of **enthrone.**

in-ti-ma (ĭn'tə-mə) *n., pl.* **-mae** (-mē') or **-mas.** *Anat.* The innermost layer of an organ or part, esp. the wall of a lymphatic vessel, artery, or vein. [NLat. < Lat., fem. of *intimus*, innermost.] —**in'ti-mal** *adj.*

in-ti-ma-cy (ĭn'tə-mə-sē) *n., pl.* **-cies.** The condition of being intimate.

in-ti-mate[1] (ĭn'tə-mĭt) *adj.* 1. Marked by close acquaintance, association, or familiarity: *an intimate understanding of the rules.* 2. Pertaining to or indicative of one's deepest nature. 3. Essential; innermost. 4. Characterized by informality and privacy: *an intimate nightclub.* 5. **a.** Very personal; private. **b.** Of or having sexual relations. —*n.* A close friend or confidant. [LLat. *intimatus*, p.part. of *intimare*, to intimate.] —**in'ti-mate-ly** *adv.* —**in'ti-mate-ness** *n.*

in-ti-mate[2] (ĭn'tə-māt') *tr.v.* **-mat-ed, -mat-ing, -mates.** 1. To communicate with a hint or other indirect sign; imply subtly. 2. To announce; proclaim. [LLat. *intimare, intimate-*, to make known < Lat. *intimus*, innermost.] —**in'ti-mat'er** *n.* —**in'ti-ma'tion** *n.*

in-tim-i-date (ĭn-tĭm'ĭ-dāt') *tr.v.* **-dat-ed, -dat-ing, -dates.** 1. To make timid; threaten. 2. To discourage or inhibit by or as if by threats. [Med. Lat. *intimidare, intimidat-* : Lat. *in-* (intensive) + *timidus*, timid.] —**in-tim'i-da'tion** *n.* —**in-tim'i-da'tor** *n.*

in-tinc-tion (ĭn-tĭngk'shən) *n. Eccles.* The administration of the Eucharist by dipping the host into the wine and offering both simultaneously to the communicant. [LLat. *intinctio*, a dipping in < Lat. *intingere*, to dip in : *in-*, in + *tingere*, to moisten.]

in-tine (ĭn'tēn') *n.* The inner wall layer of a spore or pollen grain. [G. < Lat. *intus*, within.]

in-ti-tule (ĭn-tĭch'ōōl) *tr.v.* **-uled, -ul-ing, -ules.** *Chiefly Brit.* To give a designation or title to (a legislative act, for example). [OFr. *intituler* < LLat. *intitulare* : Lat. *in-*, in + Lat. *titulus*, title.]

in-to (ĭn'tōō) *prep.* 1. To the inside or interior of. 2. To the activity or occupation of: *go into banking.* 3. To the condition or form of: *break into pieces.* 4. So as to be in or be included in: *enter into an agreement.* 5. To a point within the limits of a period of time or extent of space: *well into the week.* 6. Against: *ram into a tree.* 7. Toward; in the direction of: *look into the distance.* 8. *Informal.* Interested in or involved with: *They are into vegetarianism.* [ME < OE : *in*, in + *to*, to.]

in-tol-er-a-ble (ĭn-tŏl'ər-ə-bəl) *adj.* 1. Incapable of being tolerated; unbearable: *intolerable agony.* 2. Inordinate; extravagant. —**in-tol'er-a-bil'i-ty, in-tol'er-a-ble-ness** *n.* —**in-tol'er-a-bly** *adv.*

in-tol-er-ance (ĭn-tŏl'ər-əns) *n.* 1. The quality or condition of being intolerant. 2. Inability to tolerate.

in-tol-er-ant (ĭn-tŏl'ər-ənt) *adj.* Not tolerant, esp.: **a.** Unwilling to tolerate differences in opinions or beliefs, esp. religious beliefs. **b.** Unable or unwilling to endure: *intolerant of interruptions.* —**in-tol'er-ant-ly** *adv.*

in-to-nate (ĭn'tə-nāt') *tr.v.* **-nat-ed, -nat-ing, -nates.** 1. To intone. 2. To utter with a particular tone of voice.

in-to-na-tion (ĭn'tə-nā'shən, -tō-) *n.* 1. **a.** The act of intoning. **b.** An intoned utterance. 2. A manner of producing or uttering tones, esp. with regard to accuracy of pitch. 3. **a.** The use of pitch as an element of meaning in language.

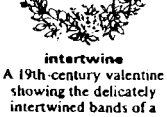

intertwine
A 19th-century valentine showing the delicately intertwined bands of a love knot

Case 1:04-cv-00204-JJF Document 169-2 Filed 04/14/2005 Page 35 of 50



marquetry

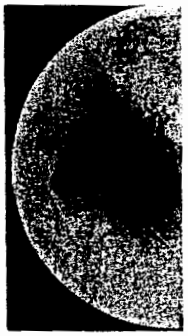



Mars
Above: View of the planet from the *Viking I* satellite
Below: 18th-century English statuette of the god

whose interference compromises the success of an undertaking. [After *Marplot*, a character in *The Busy Body*, a play by Susanna Centlivre (1667?–1723).]

mar·quee (mär-kē') *n.* **1.** A large tent with open sides, used chiefly for outdoor entertainment. **2.** A rooflike structure, often bearing a signboard, projecting over an entrance to a theater or other building. [Fr. *marquise*, marquee, marquise.]

Mar·que·san (mär-kā'zən, -sən) *n.* **1.** An inhabitant of the Marquesas Islands. **2.** The Austronesian language of the Marquesans. —*adj.* Of or pertaining to the Marquesas Islands, their inhabitants, or their language.

mar·quess (mär'kwis) *n. Chiefly Brit.* Variant of **marquis**.

mar·que·try also **mar·que·terie** (mär'kĭ-trē) *n., pl.* **-tries.** An inlay, as of wood or ivory, used chiefly for decorating furniture. [OFr. *marqueterie* < *marqueter*, to checker < *marque*, mark, of Germanic orig.]

mar·quis (mär'kwis, mär-kē') *n., pl.* **mar·quis·es** (mär'kwĭ-siz) or **mar·quis** (mär-kēz'). The title of a nobleman ranking below a duke and above an earl or count. [ME < OFr. < *marche*, boundary, of Germanic orig.]

mar·quis·ate (mär'kwĭ-zĭt, -sĭt) *n.* The rank or territory of a marquis.

mar·quise (mär-kēz') *n.* **1.** A marchioness. **2.** A marquee. **3. a.** A finger ring set with a pointed oval stone or cluster of pointed oval stones. **b.** A pointed oval shape of a gem. [Fr., fem. of *marquis*, marquis.]

mar·qui·sette (mär'kĭ-zĕt', -kwĭ-) *n.* A sheer fabric of cotton, rayon, silk, or nylon, used for clothing, curtains, and mosquito nets. [MARQUISE + -ETTE.]

mar·ram (mär'əm) *n.* A beach grass, *Ammophila arenaria*, much planted to stabilize shifting dunes. [Of Scand. orig.]

mar·riage (mär'ĭj) *n.* **1. a.** The state of being married; wedlock. **b.** The legal union of a man and woman as husband and wife. **2.** The act of marrying or the ceremony of being married; wedding. **3.** A close union: *a true marriage of minds.* **4.** The combination of the king and queen of the same suit, as in pinochle. [ME *mariage* < OFr. < *marier*, to marry. —see MARRY.]

mar·riage·a·ble (mär'ĭ-jə-bəl) *adj.* Suitable for marriage: *of marriageable age.* —**mar'riage·a·bil'i·ty, mar'riage·a·ble·ness** *n.*

marriage of convenience *n.* A marriage or joint undertaking arranged for political, economic, or social benefit rather than from personal attachment.

mar·ried (mär'ēd) *adj.* **1. a.** Having a spouse: *a married man.* **b.** United in matrimony: *a married couple.* **2.** Of or pertaining to the state of marriage: *married bliss.* —*n.* A married person: *young marrieds.*

mar·ron (mă-rôN') *n.* The Spanish chestnut (sense 2). [Fr. — see MAROON².]

mar·rons gla·cés (mă-rôN' glă-sā') *pl.n.* Chestnuts glazed with sugar or syrup. [Fr.]

mar·row (mär'ō) *n.* **1.** The soft material that fills bone cavities, consisting, in varying proportions, of fat cells and maturing blood cells together with supporting connective tissue and numerous blood vessels. **2.** Spinal marrow: the spinal cord. **3. a.** The inmost, choicest, or essential part; pith. **b.** Strength or vigor; vitality. **4.** *Chiefly Brit.* The vegetable marrow. [ME *marow* < OE *mearg*.]

marrow·bone (mär'ō-bōn') *n.* A bone for flavoring soup.

mar·row·fat (mär'ō-făt') *n.* One of several varieties of pea that produces large seeds.

marrow pea *n.* The marrowfat.

marrow squash *n.* The vegetable marrow.

mar·ry¹ (mär'ē) *v.* **-ried, -ry·ing, -ries.** —*tr.* **1. a.** To become united with in matrimony: *They married each other in June.* **b.** To take as a husband or wife: *He married his sweetheart.* **c.** To give in marriage. **2.** To perform a marriage ceremony for. **3.** To obtain by marriage: *marry wealth.* **4.** *Naut.* To join (two ropes) end to end by interweaving their strands. **5.** To unite in a close, usually permanent way. —*intr.* **1.** To take a husband or wife; wed: *They married in their twenties.* **2.** To enter into a close relationship; unite. [ME *marien* < OFr. *marier* < Lat. *maritare* < *maritus*, married.]

mar·ry² (mär'ē) *interj. Archaic.* Used as an exclamation of surprise or emphasis. [ME *Marie*, Mary, the mother of Jesus.]

Mars (märz) *n.* **1.** *Rom. Myth.* The god of war. **2.** The fourth planet from the sun, having a sidereal period of revolution about the sun of 687 days at a mean distance of 227.8 million kilometers, or 141.6 million miles, a mean radius of approximately 3,363 kilometers, or 2,090 miles, and a mass approximately 0.15 that of Earth. [ME < Lat.]

mar·seille (mär-sāl') also **mar·seilles** (-sālz') *n.* A heavy cotton fabric with a raised pattern of stripes or figures. [After *Marseilles*, France.]

marsh (märsh) *n.* An area of low-lying wet land; fen, swamp, or bog. [ME < OE *mersc*.]

mar·shal (mär'shəl) *n.* **1.** In some countries, a military officer of the highest rank. **2.** In the United States: **a.** A Federal officer who carries out court orders. **b.** A city officer who carries out court orders. **c.** The head of a police or fire department. **3.** A person in charge of a parade or ceremony. **4.** A high official in a royal court, esp. one aiding the sovereign in military affairs. —*v.* **-shaled, -shal·ing, -shals** also **-shalled, -shal·ling, -shals.** —*tr.* **1.** To arrange or place (soldiers, for example) in line for a parade, maneuver, or review. **2.** To arrange, place, or set in methodical order: *marshal facts in preparation for an exam.* **3.** To enlist and organize: *"our interests in marshalling the French colonies against Germany"* (Winston Churchill). **4.** To guide (a person) ceremoniously; conduct or usher. —*intr.* To take up positions in or as if in a military formation. [ME < OFr. *mareschal*, of Germanic orig.] —**mar'shal·cy, mar'shal·ship'** *n.*

marsh elder *n.* Any of several shrubs of the genus *Iva*, of eastern and central North America, often growing in salt marshes.

marsh gas *n.* Methane.

marsh hawk *n.* A hawk, *Circus cyaneus*, found in marshy areas of North America and Eurasia.

marsh hen *n.* Any of various marsh birds of the family Rallidae, which includes the gallinules, coots, and rails.

marsh·land (märsh'lănd') *n.* A marshy tract of land.

marsh·mal·low (märsh'mĕl'ō, -măl'ō) *n.* **1.** A confection of sweetened paste, formerly made from the root of the marsh mallow. **2.** A confection made of corn syrup, gelatin, sugar, and starch, and dusted with powdered sugar. **3.** *Slang.* A timid or cowardly person.

marsh mallow *n.* A plant, *Althaea officinalis*, native to Europe and naturalized in marshes of eastern North America, having showy pink flowers and a mucilaginous root used as a demulcent and in confectionery. [ME *mersshmalwe* < OE *merscmealwe* : *mersc*, marsh + *mealwe*, mallow.]

marsh marigold *n.* A plant of the genus *Caltha*, esp. *C. palustris*, growing in swampy places and having bright yellow flowers.

marsh·y (mär'shē) *adj.* **-i·er, -i·est.** Of, like, or characterized by a marsh or marshes; boggy. —**marsh'i·ness** *n.*

mar·su·pi·a (mär-sōō'pē-ə) *n.* Plural of **marsupium.**

mar·su·pi·al (mär-sōō'pē-əl) *n.* A mammal of the order Marsupialia, including kangaroos, opossums, bandicoots, and wombats, found principally in Australia and South and Central America. [NLat. *marsupialis* < *marsupium*, marsupium. —see MARSUPIUM.] —**mar·su'pi·al** *adj.*

mar·su·pi·um (mär-sōō'pē-əm) *n., pl.* **-pi·a** (-pē-ə). **1.** An external abdominal pouch in female marsupials that contains mammary glands and that shelters the young until fully developed. **2.** A temporary egg pouch in various animals. [NLat., pouch < Gk. *marsupion*, *marsipion*, dim. of *marsupos*, purse.]

mart (märt) *n.* **1.** A market; trading center. **2.** *Archaic.* A fair. [ME < MDu. < ONFr. *market*, market. —see MARKET.]

mar·ta·gon (mär'tə-gən) *n.* A lily, *Lilium martagon*, having pinkish-purple, spotted flowers. [ME < OFr. < OSp. < Turk. *martagān*, a kind of turban.]

Mar·tel·lo tower (mär-tĕl'ō) *n.* A small circular fort, formerly used in Europe for coastal defense. [After Cape *Mortella*, Corsica.]

mar·ten (mär'tn) *n., pl.* **marten** or **-tens.** **1.** Any of various carnivores of the genus *Martes*, found in northern wooded areas. **2.** The fur of the marten. [ME < OFr. *martrine* < Med. Lat. *martrina*, of Germanic orig.]

mar·ten·site (mär'tn-zīt') *n.* A solid solution of iron and up to one per cent of carbon, the chief constituent of hardened carbon tool steels. [After Adolf *Martens* (1850–1914).] —**mar·ten·sit'ic** (-zĭt'ĭk) *adj.*

Mar·tha (mär'thə) *n.* In the New Testament, a sister of Lazarus and Mary, and friend of Jesus.

mar·tial (mär'shəl) *adj.* **1.** Of, pertaining to, or suggesting war. **2.** Pertaining to or connected with the armed forces of the military profession. **3.** Characteristic of or befitting a warrior: *"a bull-necked, martial-looking man"* (Dickens). [ME < Lat. *martialis* < *Mars*, Mars.] —**mar'tial·ism** *n.* —**mar'tial·ist** *n.* —**mar'tial·ly** *adv.*

martial art *n.* Any of several Oriental arts of combat or self-defense, as karate, judo, or tae kwon do, usually practiced as sport.

martial law *n.* Temporary rule by military authorities imposed upon a civilian population esp. in time of war or when civil authority is unable to maintain public safety.

Mar·tian (mär'shən) *adj.* Of or pertaining to the planet Mars. —*n.* A hypothetical inhabitant of the planet Mars, esp. as a stock fictional character. [ME < Lat. *martius* < *Mars*, Mars.]

mar·tin (mär'tn) *n.* Any of several birds resembling and closely related to the swallows, as the house martin and the purple martin. [OFr., prob. < the name *Martin*, Martin.]

mar·ti·net (mär'tn-ĕt') *n.* **1.** A rigid military disciplinarian. **2.** A person who demands absolute adherence to rules: *a martinet about his children's schooling.* [After Jean *Martinet* (d. 1672), a French army officer.]

mar·tin·gale (mär'tn-gāl') also **mar·tin·gal** (-gəl) *n.* **1.** The strap of a horse's harness that connects the girth to the nose band and is designed to prevent a horse from throwing back its head. **2.** *Naut.* Any of several parts of standing rigging strengthening the bowsprit and jib boom against the force of the head stays. **3.** A method of gambling in which one doubles the stakes after each loss. **4.** A loose half belt or strap placed on the back of a garment, as a coat or jacket. [OFr.]

mar·ti·ni (mär-tē'nē) *n., pl.* **-nis.** A cocktail made of gin or vodka and dry vermouth. [Orig. unknown.]

Martin Luther King Day *n.* January 15. Martin Luther

King's b
states.
Martin-n
annually
messe : *
mart-let
sentatio
indicate
martinet,
mar-tyr
rather th
makes g
belief, c
suffering
great sh
-tyred, -
2. To inf
Gk. *mar*.
mar-tyr-d
tyr; the s
mar-tyr-i
mar-tyr-o
catalogu
martyrs,
account
mar-vel
miration.
-veled, -
become
child's ge
that he c
Lat. *mar*.
mar-vel-o
wonder
supernat
(Psalm
first-rate.
vel-ous-n
Marx-i-an
makes us
concepts
political
—Marx'i-
Marx-ism
of Karl M
tem of t
leading s
to a socia
Marx-ism
pansion
ism as th
of struggl
tries.
Marx-ist
ideas of
Mary (m
Jesus. 2.
Jesus.
Mary Jan
MARIJUAN
Mary Ma
Mary Ma
woman w
near his
Mary-pol-
mar-zi-pa
made of
into deco
medieval
Ma-sai (m
ple of Ke
of the M
mas-ca-lo
mas-car-a
eyelashes
mas-cot
lieved to
athletic
mascot
mas-cu-li
boys; ma
nish. 3. O
or gramn
males: *a*
nal syllab
joy." 5. A
cadence.
form of t
culin < L.
adv. —m
mas-cu-li
1. To giv
cause to
ma-ser (n
dent elec
quencies

pasque-flow·er (pāsk'flou'ər) *n.* Any of several plants of the genus *Anemone*, having large blue, purple, or white flowers and conspicuously plumed fruit. [Blend of OFr. *pasque*, Easter and E. *passeflower*, pasqueflower < OFr. *passefleur* : *passer*, to pass + *fleur*, flower.]

pas·qui·nade (pās'kwə-nād') *n.* 1. A lampoon posted in a public place. 2. Satire. —*tr.v.* **-nad·ed, -nad·ing, -nades.** To ridicule with a pasquinade. [Fr. < Ital. *pasquinata*, after *Pasquino*, the nickname given to a statue in Rome, Italy on which lampoons were posted.] —**pas'qui·nad'er** *n.*

pass (pās) *v.* **passed, pass·ing, pass·es.** —*intr.* 1. To move on or ahead; proceed. 2. To run; extend: *The river passes through our land.* 3. To gain passage despite obstacles: *pass through difficult years.* 4. To catch up with and move past another vehicle: *The sports car passed on the right.* 5. To move past in time; elapse: *The days passed quickly.* 6. To be transferred from one to another; circulate: *The wine passed around the table.* 7. To be communicated or exchanged between persons: *Loud words passed.* 8. To be transferred or conveyed to another by will, deed, or the like: *The title passed to the older son.* 9. To undergo transition from one condition, form, quality, or characteristic to another: *Daylight passed into darkness.* 10. To come to an end; be terminated: *His anger passed suddenly.* 11. To cease to exist; die: *passed on in his sleep.* 12. To happen; take place: *What passed during the morning?* 13. To be allowed to happen without notice or challenge: *Let their rude remarks pass.* 14. To undergo an examination or trial with favorable results. 15. To be approved or adopted: *The motion to adjourn passed.* 16. *Law.* **a.** To sit in judicial or legal investigation. **b.** To pronounce an opinion, judgment, or sentence. **c.** To sit in adjudication. 17. *Sports.* To transfer a ball or puck to a teammate. 18. To thrust or lunge in fencing. 19. *Games.* To let one's turn to play or bid go by. —*tr.* 1. To go by without stopping; leave behind. 2. **a.** To go by without paying attention to; let go unmentioned. **b.** To fail to pay (a dividend). 3. To go beyond; exceed: *The returns passed all expectations.* 4. To go across; go through: *pass enemy lines.* 5. **a.** To undergo (a trial or examination) with favorable results: *He passed every test.* **b.** To cause or allow to go through a trial, test, or examination successfully: *The instructor passed all the candidates.* 6. **a.** To cause to move: *He passed his hand over the fabric.* **b.** To cause to move into a certain position: *pass a cable around a cylinder.* **c.** To cause to move as part of a process: *pass liquid through a filter.* 7. To cause to go by: *pass foot soldiers in review.* 8. To allow to go by or elapse; spend: *He passed his winter in Vermont.* 9. **a.** To cause to be transferred from one to another; circulate: *They passed the news quickly.* **b.** To hand over to someone else: *pass the bread.* **c.** To circulate fraudulently: *pass counterfeit money.* **d.** *Law.* To transfer title or ownership of. 10. *Sports.* **a.** To throw (a ball) to a teammate. **b.** *Baseball.* To walk (a batter). 11. To cross over; issue from: *No secrets pass her lips.* 12. To discharge (bodily waste); void. 13. **a.** To approve; adopt: *The legislature passed the bill.* **b.** To be sanctioned, ratified, or approved by: *The bill passed the House of Representatives.* 14. To pronounce; utter: *pass judgment.* 15. To go past without noticing: *He passed them by without even a nod.* —**phrasal verbs. pass away.** 1. To go away in time; end. 2. To die. 3. To spend or while away (time). **pass for.** To be accepted as being something one is not: *pass for a doctor.* **pass off.** To offer, sell, or put into circulation (an imitation of something) as genuine. **pass out.** 1. To lose consciousness. 2. To die. **pass over.** To leave out; disregard. **pass up.** *Informal.* To reject; let go by: *pass up an opportunity.* —*n.* 1. The act of passing; passage. 2. A way through or on which one can move or travel, esp. a narrow gap between mountain peaks. 3. **a.** A permit, ticket, or authorization to come and go at will. **b.** A free ticket entitling one to transportation or admission. **c.** Written leave of absence from military duty. 4. A sweep or run by an aircraft over an area or target. 5. A condition or situation, often critical in nature; predicament. 6. A sexual invitation or overture. 7. A motion of the hand or the waving of a wand for magic. 8. **a.** *Sports.* A transfer of a ball or puck between teammates. **b.** *Sports.* A lunge or thrust in fencing. **c.** *Baseball.* A walk. 9. *Games.* A refusal to bid, draw, bet, or play. 10. A winning throw of the dice in the game of craps. 11. A pase. —*idioms.* **bring to pass.** To cause to happen. **come to pass.** To happen. **in passing.** By the way; parenthetically. **pass muster.** To pass an examination or an inspection; measure up to a given standard. **pass the buck.** To shift responsibility or blame to another. **pass the hat.** To take up a collection. **pretty pass.** A bad or difficult situation. [ME *passen* < OFr. *passer* < VLat. **passare* < Lat. *passus*, step. —see PACE¹.] —**pass'er** *n.*

Usage: The past tense and past participle of *pass* is *passed*: *They passed* (or *have passed*) *our home. Time had passed slowly. Past* is the corresponding adjective (*in centuries past*), adverb (*drove past*), and preposition (*past midnight; past the crisis*).

pass·a·ble (pās'ə-bəl) *adj.* 1. Able to be passed, traversed, or crossed, as a road or stream. 2. Acceptable for general circulation: *passable currency.* 3. Satisfactory but not outstanding. —**pass'a·ble·ness** *n.* —**pass'a·bly** *adv.*

pas·sa·ca·glia (pä'sə-käl'yə, pás'ə-käl'yə) *n. Mus.* A 17th- and 18th-century musical form consisting of continuous variations on a ground bass in slow triple meter. [Ital. < Sp. *pasacalle* : *pasar*, to pass + *calle*, street < Lat. *callis*, path.]

pas·sage (pás'ij) *n.* 1. The act or process of passing, esp.: **a.** A movement from one place to another; transit. **b.** The process of elapsing. **c.** The process of passing from one condition or stage to another; transition. **d.** *Obs.* Death. **e.** The enactment into law of a legislative measure. 2. A journey, esp. one by air or water. 3. **a.** The right to travel on something, esp. a ship: *book a passage.* **b.** The price paid for this. 4. The right, permission, or power to come and go freely. 5. **a.** A path, channel, or duct through, over, or along which something may pass: *the nasal passages.* **b.** A corridor. 6. An occurrence between two persons, esp.: **a.** An exchange of words, arguments, or vows. **b.** An exchange of blows: *passage at arms.* 7. A segment of a literary work: *a celebrated passage from Shakespeare.* 8. *Mus.* A segment of a composition. 9. *Med.* An emptying of the bowels. [ME < OFr. < *passer*, to pass.]

pas·sage·way (pás'ij-wā') *n.* A corridor.

Pas·sa·ma·quod·dy (pás'ə-mə-kwŏd'ē) *n., pl.* **Passamaquoddy** or **-dies.** 1. A tribe of Algonquian-speaking North American Indians, formerly inhabiting Maine and New Brunswick, Canada. 2. A member of the Passamaquoddy. 3. The Algonquian language of the Passamaquoddy.

pas·sant (pás'ənt) *adj. Heraldry.* Designating a beast facing and walking toward the viewer's right with one front leg raised. [ME < OFr. < pr.part. of *passer*, to pass.]

pass·book (pás'bŏŏk') *n.* 1. A bankbook. 2. A book in which a merchant records credit sales.

pas·sé (pă-sā') *adj.* 1. Out-of-date; no longer current or in fashion. 2. Past the prime; aged. [Fr. p.part. of *passer*, to pass < OFr.]

passed ball *n. Baseball.* A pitch missed by the catcher that he should have been able to field and that allows a base runner to advance a base.

pas·sel (pás'əl) *n. Informal.* A large quantity or number: *They had a whole passel of children.* [Alteration of PARCEL.]

pas·se·men·terie (pás-mĕn'trē) *n.* Ornamental trimming for a garment, such as braid, lace, or metallic beads. [Fr. < *passement*, ornamental braid < *passer*, to pass < OFr.]

pas·sen·ger (pás'ən-jər) *n.* 1. A person who travels in a train, airplane, ship, bus, or other conveyance without participating in its operation. 2. A wayfarer or traveler. [ME *passager* < OFr. < *passage*, passing < *passage*, passage < *passer*, to pass.]

passenger pigeon *n.* An extinct migratory bird, *Ectopistes migratorius*, abundant in North America until the latter part of the 19th century.

passe par-tout (pás pär-tōō') *n.* 1. Something enabling one to pass or go everywhere, esp. a master key. 2. **a.** A mounting for a picture in which colored tape forms the frame. **b.** The tape so used. 3. A mat used in mounting a picture. [Fr. : *passe*, imper. of *passer*, to pass + *partout*, everywhere.]

pas·ser-by also **pas·ser·by** (pás'ər-bī') *n., pl.* **pas·sers-by** also **pas·sers-by** A person who passes by, often by chance.

pas·se·rine (pás'ə-rĭn') *adj.* Pertaining to or designating birds of the order Passeriformes, which includes perching birds and songbirds such as the jays, blackbirds, finches, warblers, and sparrows. —*n.* A bird of the order Passeriformes. [Lat. *passerinus*, of sparrows < *passer*, sparrow.]

pas seul (pä sœl') *n.* A dance or ballet figure performed by one person. [Fr.]

pass-fail (pás'fāl') *n.* A system of grading in which traditional letter grades are not used and the student either passes or fails. —*modifier:* *a pass-fail course.*

pas·si·ble (pás'ə-bəl) *adj.* Capable of suffering; sensitive. [ME < OFr. < Med. Lat. *passibilis* < LLat. < Lat. *pati*, to suffer.] —**pas'si·bil'i·ty** *n.*

pas·sim (pás'ĭm) *adv.* Throughout; frequently. Used in textual annotation to indicate that the word or passage occurs frequently in the work cited. [Lat. < *passus*, scattered < *pandere*, to scatter.]

pass·ing (pás'ĭng) *adj.* 1. Of brief duration; transitory: *a passing fancy.* 2. Cursory; superficial; casual: *a passing glance.* 3. Allowing one to pass a test, course of study, or other examination; satisfactory: *a passing grade.* 4. *Obs.* Very; great; surpassing: " *'Tis a passing shame*" (Shakespeare). —*adv.* Very; surpassingly: *a girl who was passing fair.* —*n.* 1. The act of one that passes or the fact of having passed. 2. A place where or a means by which one can pass. 3. Death.

passing note *n. Mus.* A note that is not part of a particular chord but is placed between two chords to provide a smooth transition from one to the other.

pas·sion (pásh'ən) *n.* 1. A powerful emotion or appetite, such as love, joy, hatred, anger, or greed. 2. **a.** Ardent, adoring love. **b.** Strong sexual desire; lust. **c.** The object of such love or desire. 3. **a.** Boundless enthusiasm: *has a passion for literature.* **b.** The object of such enthusiasm: *literature is his passion.* 4. An abandoned display of emotion, esp. of anger. 5. **Passion. a.** The sufferings of Christ in the period following the Last Supper and including the Crucifixion. **b.** A narrative of this, as in one of the Gospels, or a musical setting or serial pictorial representation of it. [ME < OFr. < LLat.

three-piece (thrē'pēs') *adj.* Made in or consisting of three parts or pieces: *a three-piece suit.*
three-ply (thrē'plī') *adj.* Consisting of three layers or strands.
three-point landing (thrē'point') *n.* An airplane landing in which the tailskid or tail wheel and the two forward wheels all touch the ground simultaneously.
three-quar·ter (thrē'kwôr'tər) *adj.* Pertaining to, consisting of, or extending to three-fourths of the usual full length of something.
three-quarter binding *n.* A type of bookbinding in which the leather or fabric covering the spine extends onto the covers for one third of their width.
three-ring circus (thrē'ring') *n.* **1.** A circus having simultaneous performances in three separate rings. **2.** A situation characterized by confusing, engrossing, or amusing activity.
three R's *pl.n.* Reading, writing, and arithmetic, considered as the fundamentals of elementary education. [From the phrase *reading, 'riting,* and *'rithmetic,* alteration of *reading, writing,* and *arithmetic.*]
three-score (thrē'skôr', -skōr') *adj.* Three times twenty; sixty. —**three'score'** *n.*
three-some (thrē'səm) *adj.* Consisting of or performed by three. —*n.* **1.** A group of three persons. **2.** An activity involving three persons, esp. a golf match in which one player competes against two others who alternate their play.
three-square (thrē'skwâr') *adj.* Having an equilateral triangular cross section: *a three-square file.*
three wood *n.* A wooden golf club with more loft than a brassie.
threm·ma·tol·o·gy (thrĕm'ə-tŏl'ə-jē) *n.* The scientific breeding of domestic plants and animals. [Gk. *thremma, threm-mat-,* nursling + -LOGY.]
thren·o·dy (thrĕn'ə-dē) *n., pl.* **-dies.** A poem or song of lamentation. [Gk. *thrēnōidia* : *thrēnos,* lament + *ōidē,* song.] —**thre·no'di·al** (thrə-nō'dē-əl), **thre·nod'ic** (-nŏd'ĭk) *adj.* —**thren'o·dist** *n.*
thre·o·nine (thrē'ə-nēn') *n.* A colorless crystalline amino acid, $C_4H_9NO_3$, that is derived from the hydrolysis of protein and is an essential component of human nutrition. [Orig. unknown.]
thresh (thrĕsh) *v.* **threshed, thresh·ing, thresh·es.** —*tr.* **1. a.** To beat the stems and husks of (grain or cereal plants) with a machine or flail to separate the grain or seeds from the straw. **b.** To separate (grain or seed) in this manner. **2.** To discuss or go over (an issue, for example) repeatedly. **3.** To beat severely; thrash. —*intr.* **1.** To thresh grain. **2.** To thrash about; toss. [ME *thresshen* < OE *ðerscan.*]
thresh·er (thrĕsh'ər) *n.* **1.** One that threshes. **2.** A threshing machine. **3.** Any of various sharks of the genus *Alopias,* having a tail with a long, whiplike upper lobe.



thresh
Early 19th-century woodcut

threshing machine *n.* A farm machine used in threshing grain or seed plants.
thresh·old (thrĕsh'ōld', -hōld') *n.* **1.** The piece of wood or stone placed beneath a door; doorsill. **2.** An entrance or doorway. **3.** The place or point of beginning; outset. **4.** The intensity below which a mental or physical stimulus cannot be perceived and can produce no response: *a low threshold of pain.* [ME *thresshold* < OE *ðerscold.*]
threw (thrōō) *v.* Past tense of **throw.**
thrice (thrīs) *adv.* **1.** Three times. **2.** In a threefold quantity or degree. **3.** *Archaic.* Extremely; greatly. [ME *thries,* adv. genitive of *thrie* < OE *ðriga.*]
thrift (thrĭft) *n.* **1.** Wise economy in the management of money and other resources; frugality. **2.** Vigorous growth of living things such as plants. **3.** Any of several densely tufted, chiefly European plants of the genus *Armeria,* esp. *A. maritima,* having rounded clusters of pink flowers. [ME, prosperity < ON *ðrift* < *ðrifask,* to thrive.]
thrift·less (thrĭft'lĭs) *adj.* **1.** Lacking usefulness or value. **2.** Careless in handling money; wasteful.
thrift shop *n.* A shop that sells used articles and esp. clothing, often to benefit a charitable organization.
thrift·y (thrĭf'tē) *adj.* **-i·er, -i·est. 1.** Practicing thrift; economical and frugal. **2.** Industrious and thriving; prosperous. **3.** Growing vigorously; thriving, as a plant. —**thrift'i·ly** *adv.* —**thrift'i·ness** *n.*
thrill (thrĭl) *v.* **thrilled, thrill·ing, thrills.** —*tr.* **1.** To cause to feel a sudden intense sensation; excite greatly. **2.** To give great pleasure to; delight. **3.** To cause to quiver, tremble, or vibrate. —*intr.* **1.** To feel a sudden quiver of emotion. **2.** To quiver, tremble, or vibrate. —*n.* **1. a.** A quivering or trembling caused by sudden emotion. **b.** Something that produces such excitement. **2.** *Pathol.* A slight vibration that accompanies a cardiac or vascular murmur. [ME *thrillen,* var. of *thirlen,* to pierce < OE *ðyrlian* < *ðyrel,* hole < *ðurh,* through.] —**thrill'ing·ly** *adv.*
thrill·er (thrĭl'ər) *n.* **1.** One that thrills. **2.** *Informal.* A sensational or suspenseful book, story, or motion picture.
thrips (thrips) *n., pl.* **thrips.** Any of various small, often wingless insects of the order Thysanoptera, many of which are destructive to plants. [Lat., woodworm < Gk.]
thrive (thrīv) *intr.v.* **throve** (thrōv) or **thrived, thrived** or **thriv·en** (thrĭv'ən), **thriv·ing, thrives. 1.** To make steady progress; prosper. **2.** To grow vigorously; flourish. [ME *thriven* < ON *ðrīfask,* reflexive of *ðrīfa,* to seize.] —**thriv'er** *n.*



throne
Of Isabella of Spain

throat (thrōt) *n.* **1.** *Anat.* **a.** The portion of the digestive tract that lies between the rear of the mouth and the esophagus and includes the fauces and the pharynx. **b.** The anterior portion of the neck. **2.** *Bot.* The outer, expanded part of a tubular corolla. **3.** A narrow passage or part suggestive of the human throat: *the throat of a horn.* —*tr.v.* **throat·ed, throat·ing, throats.** To pronounce with a harsh or guttural voice. [ME *throte* < OE *ðrote.*]
throat·latch (thrōt'lăch') *n.* A strap passing under the neck of a horse for holding a bridle or halter in place.
throat·y (thrō'tē) *adj.* **-i·er, -i·est.** Uttered or sounding as if uttered deep in the throat; guttural, hoarse, or husky. —**throat'i·ly** *adv.* —**throat'i·ness** *n.*
throb (thrŏb) *intr.v.* **throbbed, throb·bing, throbs. 1.** To beat rapidly or violently; pound. **2.** To vibrate, pulsate, or sound with a steady, pronounced rhythm: *boat engines throbbing.* —*n.* The act of throbbing; a beat, palpitation, or vibration. [ME *throbben.*] —**throb'bing·ly** *adv.*
throe (thrō) *n.* **1.** A severe pang or spasm of pain, as in childbirth. **2. throes.** A condition of agonizing struggle or effort: *a country in the throes of economic collapse.* [ME *throwe* < OE *ðrawe.*]
thromb- *pref.* Variant of **thrombo-.**
throm·bi (thrŏm'bī') *n.* Plural of **thrombus.**
throm·bin (thrŏm'bĭn) *n.* An enzyme in blood that facilitates blood clotting by reacting with fibrinogen to form fibrin.
thrombo- or **thromb-** *pref.* Blood clot; blood clotting: *thromboplastic.* [< Gk. *thrombos,* clot.]
throm·bo·cyte (thrŏm'bə-sīt') *n.* A blood platelet. —**throm'bo·cyt'ic** (-sĭt'ĭk) *adj.*
throm·bo·cy·to·pe·ni·a (thrŏm'bə-sī'tə-pē'nē-ə) *n.* A condition characterized by an abnormal decrease in the number of blood platelets. —**throm'bo·cy'to·pe'nic** *adj.*
throm·bo·em·bo·lism (thrŏm'bō-ĕm'bə-lĭz'əm) *n.* The blocking of a blood vessel by a thrombus dislodged from a vein.
throm·bo·phle·bi·tis (thrŏm'bō-flĭ-bī'tĭs) *n.* Inflammation of a vein with the formation of a thrombus.
throm·bo·plas·tic (thrŏm'bō-plăs'tĭk) *adj.* **1.** Causing or promoting blood clotting. **2.** Of or pertaining to thromboplastin. —**throm'bo·plas'ti·cal·ly** *adv.*
throm·bo·plas·tin (thrŏm'bō-plăs'tĭn) *n.* A protein complex essential for thrombin formation and blood clotting.
throm·bo·sis (thrŏm-bō'sĭs) *n., pl.* **-ses** (-sēz'). The formation, presence, or development of a thrombus. [NLat. < Gk. *thrombōsis,* a clotting < *thrombousthai,* to clot < *thrombos,* clot.]
throm·bus (thrŏm'bəs) *n., pl.* **-bi** (-bī'). A blood clot occluding a blood vessel or formed in a heart cavity. [NLat. < Gk. *thrombos,* clot.]
throne (thrōn) *n.* **1.** The chair occupied by an exalted personage such as a sovereign or bishop on state or ceremonial occasions. **2. a.** A personage who occupies a throne. **b.** The power, dignity, or rank of such a personage; sovereignty. **3. thrones.** *Theol.* The third of the nine orders of angels. —*tr. & intr. v.* **throned, thron·ing, thrones.** To enthrone or occupy a throne. [ME *thron* < OFr. *trone* < Lat. *thronus* < Gk. *thronos.*]
throng (thrông, thrŏng) *n.* **1.** A large group of people gathered or crowded closely together; multitude. **2.** A large group of things; host. —*v.* **thronged, throng·ing, throngs.** —*tr.* **1.** To crowd into; fill: *commuters thronging the subway platform.* **2.** To press in on. —*intr.* To gather, press, or move in a throng. [ME < OE *ðrang.*]
thros·tle (thrŏs'əl) *n.* **1.** Any of various Old World thrushes. **2.** A machine formerly used for spinning fibers such as cotton or wool. [ME < OE *ðrostle.*]
throt·tle[1] (thrŏt'l) *n.* **1. a.** A valve in an internal-combustion engine that regulates the amount of vaporized fuel entering the cylinders. **b.** A similar valve in a steam engine regulating the amount of steam. **c.** A lever or pedal controlling either of these valves. **2. a.** The throat. **b.** The windpipe. [Perh. dim. of obs. *throte,* throat < ME.]
throt·tle[2] (thrŏt'l) *tr.v.* **-tled, -tling, -tles. 1. a.** To regulate the flow of (fuel) in an engine. **b.** To regulate the speed of (an engine) with a throttle. **2.** To strangle; choke. **3.** To suppress: *tried to throttle the press.* [ME *throttlen,* to strangle, perh. < *throte,* throat.] —**throt'tler** *n.*
throt·tle-hold (thrŏt'l-hōld') *n.* A strangle hold (sense 2).
through (thrōō) *prep.* **1.** In one side and out the opposite or another side of: *went through the tunnel.* **2.** Among or between; in the midst of: *a walk through the flowers.* **3.** By way of: *climbed in through the window.* **4.** By the means or agency of: *got an antique through a dealer.* **5.** Here and there in; around: *a tour through France.* **6.** From the beginning to the end of: *stayed up through the night.* **7.** At or to the end of; done or finished with, esp. successfully: *We are through the initial testing period.* **8.** Without stopping for: *drove through a red light.* **9.** Because of: *succeeded through hard work.* —*adv.* **1.** From one end or side to another or opposite end or side. **2.** From beginning to end; completely; thoroughly. **3.** To a conclusion or accomplishment: *see the matter through.* **4.** Out into the open. —*adj.* **1.** Passing or extending from one end, side, or surface to another: *a through beam.* **2.** Allowing continuous passage; unobstructed: *a through street.* **3.** Affording transportation to a destination with few

or no stops and no transfers: *a through bus.* **4.** Finished; washed up: *Because of the scandal, he was through politically.* **5.** At completion: *He was through with the project.* —**idiom. through and through. 1.** In every part of; throughout. **2.** In every aspect; completely. [ME < OE *ðurh.*]

through-ly (thro͞o′lē) *adv. Archaic.* Thoroughly.

through-out (thro͞o-out′) *prep.* In, to, through, or during every part of; all through. —*adv.* **1.** In or through all parts; everywhere. **2.** During the entire time or extent.

through-put (thro͞o′po͝ot′) *n.* Output or production, as of a computer program, over a period of time.

through street *n.* A street on which traffic is permitted to move without having to stop, as for traffic entering from intersecting streets.

through-way (thro͞o′wā′) *n.* Variant of **thruway.**

throve (thrōv) *v.* A past tense of **thrive.**

throw (thrō) *v.* **threw** (thro͞o), **thrown** (thrōn), **throw·ing, throws.** —*tr.* **1.** To propel through the air with a swift motion of the arm; hurl: *threw a rock.* **2.** To discharge into the air by any means: *a cannon that throws a shell ten miles.* **3.** To hurl with great force, as in anger: *He threw himself at his opponent.* **4.** To hurl to the ground or floor: *The horse threw its rider.* **5.** To perplex or mislead: *All his excuses couldn't throw her.* **6.** To put on or off hastily or carelessly: *throw on a jacket.* **7.** To put abruptly or forcibly into a specified condition: *threw him into a fit of laughter.* **8.** To form on a potter's wheel: *throw a vase.* **9.** To twist (fibers) into thread. **10. a.** To roll (dice). **b.** To roll (a particular combination) with dice. **c.** To discard or play (a card). **11.** To cast: *The rising sun threw shadows across the lawn.* **12.** To bear (young), as cows or horses. **13.** *Slang.* To arrange or give (a party, for example). **14.** To move (a controlling lever or switch). **15.** *Informal.* To lose (a contest) purposely. **16.** To abandon oneself to: *heard the news and threw a fit.* **17.** To commit (oneself) esp. for leniency or support: *threw himself on the mercy of the court.* **18.** To deliver (a punch), as in boxing: *threw a left hook.* —*intr.* To cast, fling, or hurl something. —**phrasal verbs. throw away. 1. a.** To get rid of as useless. **b.** To discard: *threw away two aces.* **2. a.** To fail to take advantage of: *threw away a chance to make big money.* **b.** To waste or use in a foolish manner: *threw away the family fortune.* **throw back. 1.** To hinder or check the progress of. **2.** To revert to an earlier type or stage in one's past. **3.** To cause to depend; make reliant. **throw in. 1.** To engage (a clutch, for example). **2.** To add (an extra amount) with no additional charge. **3.** To insert or introduce into a course of something: *threw in a few snide comments.* **throw off. 1.** To cast out; reject. **2.** To give off; emit: *exhaust pipes throwing off fumes.* **3.** To rid oneself of: *threw off all unpleasant memories.* **throw out. 1.** To give off; emit: *searchlights throwing out powerful beams.* **2.** To reject or discard: *The committee threw out her proposal.* **3.** To get rid of as useless: *threw out the garbage.* **4.** To offer, as a suggestion or plan. **5.** To disengage (a clutch or gears). **6.** *Baseball.* To put out (a base runner) by throwing the ball to the player guarding the base to which he is running. **7.** To eject from a place, esp. in an abrupt or unexpected manner: *The drunk was thrown out of the restaurant.* **throw over. 1.** To overturn. **2.** To abandon. **throw up. 1.** To abandon; relinquish. **2.** To vomit. **3.** To construct hurriedly. **4.** To refer to something repeatedly and often reproachfully: *She threw up his past to him whenever they argued.* —*n.* **1.** The act of throwing; cast. **2.** The distance, height, or direction of something thrown: *a low throw.* **3. a.** A roll or cast of dice. **b.** The combination of numbers so obtained. **4.** A chance; venture. **5.** The technique used to throw an opponent in wrestling. **6. a.** A light coverlet, such as an afghan. **b.** A scarf or shawl. **7. a.** The length of the radius of a circle described by a crank, cam, or similar machine part. **b.** The maximum displacement of a machine part moved by a crank, cam, or similar machine part. **8.** *Geol.* **a.** The amount of vertical displacement of a fault. **b.** The vertical component of the net slip. —**idioms. throw in the sponge** (or **towel**). To give up in a contest or undertaking; admit defeat: *finally threw in the sponge after 15 years of teaching.* **throw (one's) weight around.** To use power or authority, esp. in an excessive or heavy-handed way. **throw up (one's) hands.** To give up; admit defeat: *threw up his hands and walked out.* [ME *thrown* < OE *ðrāwan,* to twist.] —**throw′er** *n.*

Synonyms: *throw, cast, hurl, fling, pitch, toss, sling, heave.* These verbs mean to propel an object, usually with a movement of the arm. *Throw* is the general, nonspecific term. Especially in earlier usage, *cast* was often interchangeable with *throw. Cast* now usually refers to propelling with great force or to propelling something light with a quick, skillful movement of the arm that culminates in sudden release. In the latter sense it implies careful aim. *Hurl* and *fling* mean to throw with great force. Both terms, like *pitch,* can imply impetuous or even haphazard action; but *pitch* more often means to propel something with a set aim or purpose in mind. *Toss,* in contrast, usually means to throw a light object in a leisurely or offhand manner. *Sling* stresses force of propulsion. *Heave* generally refers to lifting and throwing a ponderous object.

throw-a-way (thrō′ə-wā′) *n.* A free handbill distributed on the street. —*adj.* **1.** Designed or intended to be discarded after use. **2.** Written or delivered in a low-key or offhand manner: *throwaway lines of dialogue.*

throw-back (thrō′bak′) *n.* **1.** A reversion to a former type or ancestral characteristic. **2.** An atavism (sense 2).

thrown (thrōn) *v.* Past participle of **throw.**

throw rug *n.* A scatter rug.

thru (thro͞o) *prep., adv., & adj. Informal.* Through.

thrum[1] (thrŭm) *v.* **thrummed, thrum·ming, thrums.** —*tr.* **1.** To play (a stringed instrument) idly or monotonously. **2.** To repeat or recite in a monotonous tone of voice. —*intr.* **1.** To strum idly on a stringed instrument. **2.** To speak in a monotonous tone of voice; drone. —*n.* A thrumming sound. [Imit.]

thrum[2] (thrŭm) *n.* **1. a.** The fringe of warp threads left on a loom after the cloth has been cut off. **b.** One of these threads. **2.** A loose end, fringe, or tuft of thread. **3. thrums.** *Naut.* Short bits of rope yarn inserted into canvas for the purpose of roughening the surface. —*tr.v.* **thrummed, thrum·ming, thrums. 1.** To cover or trim with thrums; fringe. **2.** *Naut.* To sew thrums in (canvas). [ME < OE (*tunge*) *ðrum,* ligament (of the tongue).]

thrush[1] (thrŭsh) *n.* **1.** Any of various songbirds of the family Turdidae, characteristically having brownish upper plumage and a spotted breast. **2.** Any of various birds similar or related to the thrush. [ME *thrushe* < OE *ðryšce.*]

thrush[2] (thrŭsh) *n.* **1.** An oral infection with a fungus, *Candida albicans,* characterized by white eruptions in the mouth. **2.** A suppurative infection of a horse's foot caused by standing in a wet, unhygienic stall. [Prob. of Scand. orig.]

thrust (thrŭst) *v.* **thrust, thrust·ing, thrusts.** —*tr.* **1. a.** To push or drive quickly and forcibly: *thrust the ax into the tree.* **b.** To stab; pierce: *thrust a dagger into her heart.* **2.** To force (oneself or another) into a specified condition or situation: *thrust himself through the crowd; was thrust into a position of awesome responsibility.* **3.** To put in; interject. —*intr.* **1.** To shove into something; push. **2.** To pierce or stab with or as if with a pointed weapon. **3.** To force one's way. —*n.* **1.** A forceful shove or push; lunge. **2. a.** A driving force or pressure. **b.** The forward-directed force developed in a jet or rocket engine as a reaction to the rearward ejection of fuel gases at high velocities. **3.** A stab. **4.** General direction or tendency: *The whole thrust of the project was to make money.* **5.** *Archit.* Outward or lateral stress in a structure, such as an arch. [ME *thrusten* < ON *ðrȳsta.*] —**thrust′er** *n.*

thrust fault *n. Geol.* A reverse fault having a low angle of inclination in relation to the horizontal plane.

thru-way also **through-way** (thro͞o′wā′) *n.* An expressway.

thud (thŭd) *n.* **1.** A dull sound, as that of a heavy object striking a solid surface. **2.** A blow or fall causing a thud. —*intr.v.* **thud·ded, thud·ding, thuds.** To make a thud. [Perh. < ME *thudden,* to strike with a weapon < OE *ðyddan.*]

thug (thŭg) *n.* **1.** A cutthroat or ruffian; hoodlum. **2.** One of a band of professional assassins formerly active in northern India. [Hindi *thag* < Skt. *sthagah,* a cheat < *sthagati,* he conceals.] —**thug′ger·y** *n.* —**thug′gish** *adj.*

thu·ja (thō͞o′jə, thyō͞o′-) *n.* Arborvitae (sense 1). [NLat. *Thuja,* arborvitae genus < Med. Lat. *thuja,* cedar < Gk. *thuia.*]

Thu·le (thō͞o′lē, thyō͞o′-) *n.* The most northerly region of the ancient habitable world, conceived as an island north of Britain by Ptolemy and other ancient geographers. [Lat. < Gk. *Thoulē.*]

thu·li·um (thō͞o′lē-əm, thyō͞o′-) *n. Symbol* **Tm** A bright silvery rare-earth element having 16 known isotopes with mass numbers ranging from 161 to 176. The x-ray emitting isotope **Tm** 170 is used in small portable medical x-ray units. Atomic number 69; atomic weight 168.934; melting point 1,545°C; boiling point 1,727°C; specific gravity 9.332; valences 2, 3. [< THULE.]

thumb (thŭm) *n.* **1. a.** The short first digit of the human hand, opposable to each of the other four digits. **b.** A corresponding digit in other animals, esp. primates. **c.** The part of a glove or mitten that covers the thumb. **2.** *Archit.* An ovolo. —*v.* **thumbed, thumb·ing, thumbs.** —*tr.* **1.** To disarrange, soil, or wear by careless or frequent handling. **2.** *Informal.* To solicit (a ride) from a passing vehicle by signaling with the thumb. —*intr.* To hitchhike. —**idioms. all thumbs.** Clumsy; awkward. **thumb (one's) nose.** To express scorn or derision by or as if by placing the thumb on the nose and wiggling the fingers. **thumbs down.** An expression of rejection, refusal, or disapproval. **thumbs up.** An expression of hope or success. **thumb through.** To browse rapidly through (the pages of a publication). [ME < OE *ðūma.*]

thumb-hole (thŭm′hōl′) *n.* The hole on a wind instrument that is opened or closed with the thumb.

thumb index *n.* A series of rounded indentations cut into the front edge of a book, each labeled, as with a letter, to indicate a section of the book.

thumb-in·dex (thŭm′ĭn′dĕks) *tr.v.* **-dexed, -dex·ing, -dex·es.** To furnish with a thumb index.

thumb-nail (thŭm′nāl′) *n.* The nail of the thumb. —*adj.* **1.** Of the size of a thumbnail. **2.** Brief: *a thumbnail sketch.*

thumb-nut (thŭm′nŭt′) *n.* A wing nut.

thumb-print (thŭm′prĭnt′) *n.* A print made by the thumb and esp. by the inside of the first joint of the thumb.

thumb-screw (thŭm′skro͞o′) *n.* **1.** A screw so designed that it



US005312333A

United States Patent [19]

Churinetz et al.

[11] Patent Number: 5,312,333

[45] Date of Patent: May 17, 1994

[54] ENDOSCOPIC MATERIAL DELIVERY DEVICE

[75] Inventors: Robert Churinetz, West Haven; Jeffrey S. White, Ridgefield, both of Conn.

[73] Assignee: United States Surgical Corporation, Norwalk, Conn.

[21] Appl. No.: 863,195

[22] Filed: Apr. 3, 1992

[51] Int. Cl.[5] A61M 5/00

[52] U.S. Cl. 604/57; 604/58; 604/140; 604/148

[58] Field of Search 604/57-61, 604/64, 140, 141, 143, 145-148

[56] References Cited

U.S. PATENT DOCUMENTS

1,642,950	9/1927	Haas	604/58
2,554,352	5/1951	Ward et al.	604/148
2,623,519	12/1952	Cohen	604/141
2,647,512	8/1953	Johnson	604/64
3,088,207	5/1963	Borsuk	604/61
3,561,433	2/1971	Kovach .	
3,744,493	7/1973	Booher et al.	604/60
3,934,584	1/1976	Corio	604/59
4,154,239	5/1979	Turley	604/61
4,237,871	12/1980	Bonnet .	
4,349,028	9/1982	Green .	
4,426,024	1/1984	Hogan et al.	604/141
4,522,621	6/1985	Cassou	604/140
4,597,753	7/1986	Turley	604/61
4,790,819	12/1988	Li et al.	604/59
4,944,726	7/1990	Hilal et al.	604/143
4,977,900	12/1990	Fehling et al. .	
5,015,233	5/1991	McGough et al.	604/146
5,024,656	6/1991	Gasaway et al.	604/141
5,046,486	9/1991	Grulke et al. .	
5,125,836	6/1992	Dragan et al. .	
5,129,882	7/1992	Weldon et al.	604/96
5,133,701	7/1992	Han	604/289
5,200,170	4/1993	McDow	604/289
5,221,259	6/1993	Weldon et al. .	
5,222,939	6/1993	Tiefenbrun et al. .	
5,224,931	7/1993	Kumar .	

FOREIGN PATENT DOCUMENTS

81392	6/1983	European Pat. Off.	604/61
0436353A1	10/1991	European Pat. Off. .	
3909999	3/1989	Fed. Rep. of Germany .	
84117	8/1935	Switzerland	604/148
26666	of 1903	United Kingdom	604/289

OTHER PUBLICATIONS

"Toy-Smoot Laparoscopic Hernioplasty", Toy et al., Surgical Laparoscopy & Endoscopy, vol. 1, No. 3, pp. 151-155, 1991.

"Use of an Oxidized, Regenerated Cellulose Absorbable Adhesion Barrier at Laparoscopy", Ricardo Azziz, M.D. et al., Journal of Reproduction Medicine, vol. 36, No. 7, Jul. 1991.

"Laparoscopic Application of Interceed (TC7) in the Pig", Michael P. Diamond et al. Journal of Gynecologic Surgery, vol. 5, No. 2, 1989.

"Cellulose Barrier cuts Adhesion Risk After Infertility Procedures", OB/GYN News, May 1-14, 1990.

Linksy et al., Journal of Reproductive Medicine, vol. 32, No. 1, Jan. 1987.

Diamond et al, Microsurgery 8: 198-200, 1987.

Fertility and Sterility, vol. 51, No. 6, Jun. 1989.

Intercede Product Literature, 1989.

Primary Examiner—Ralph Lewis

[57] ABSTRACT

A device for delivering a quantity of material endoscopically to an intended site of application within a body through an incision or entrance wound includes a handle portion with movable trigger means, and an endoscopic portion. A reservoir or cartridge containing material for delivery may be disposed in the handle or endoscopic portion of the delivery device. In operation, the trigger means may be operated in such a manner so as to cause a discharge of a metered quantity of material from the proximal end of the endoscopic tube.

18 Claims, 3 Drawing Sheets

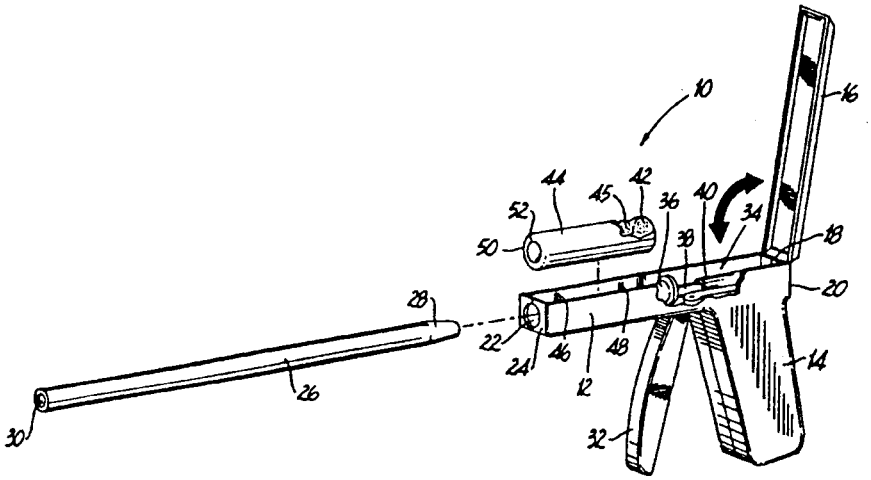

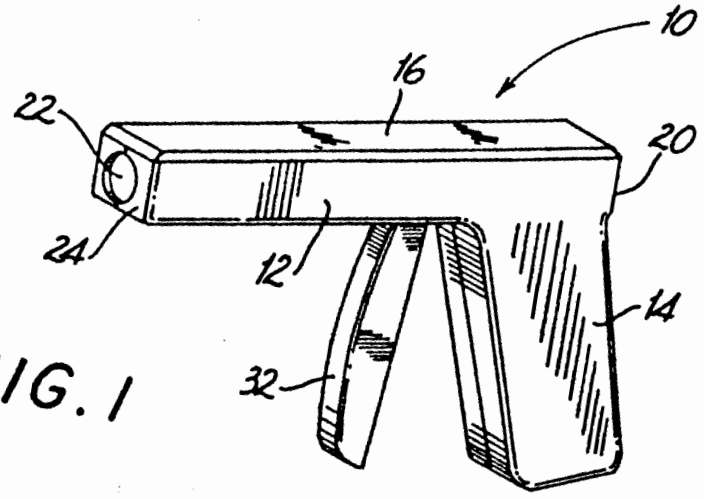
10
16
22
20
24
12
14
32

FIG. 1

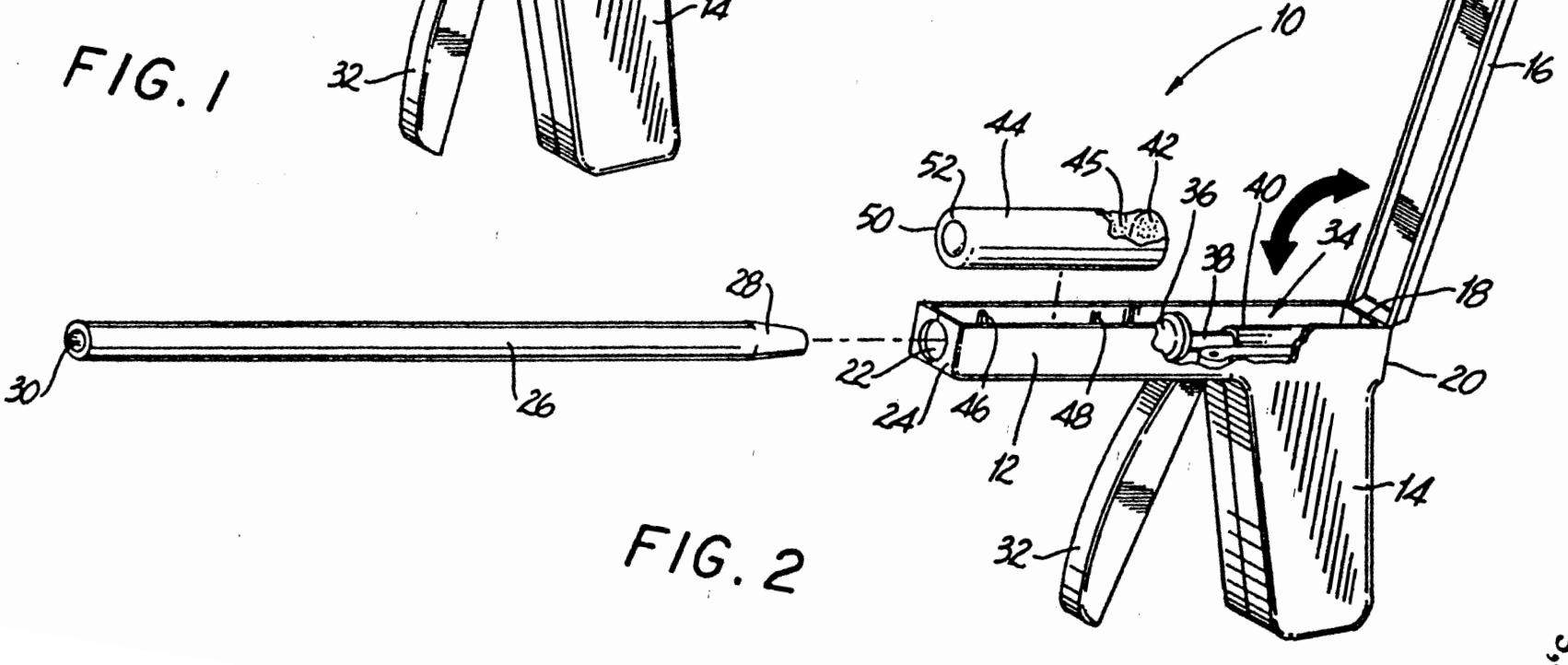
10
16
44
52
45
42
36
40
50
38
34
18
28
22
20
24
46
48
12
14
32
30
26

FIG. 2

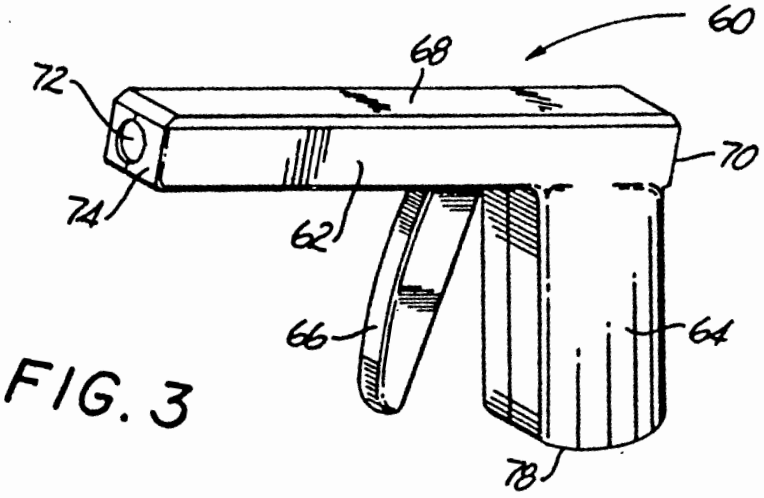
60
68
72
70
74
62
66
64
78

FIG. 3

60
68
52
44
42
50
54
84
82
70
30
26
28
72
74
62
66
64
78
80
85
76

FIG. 4

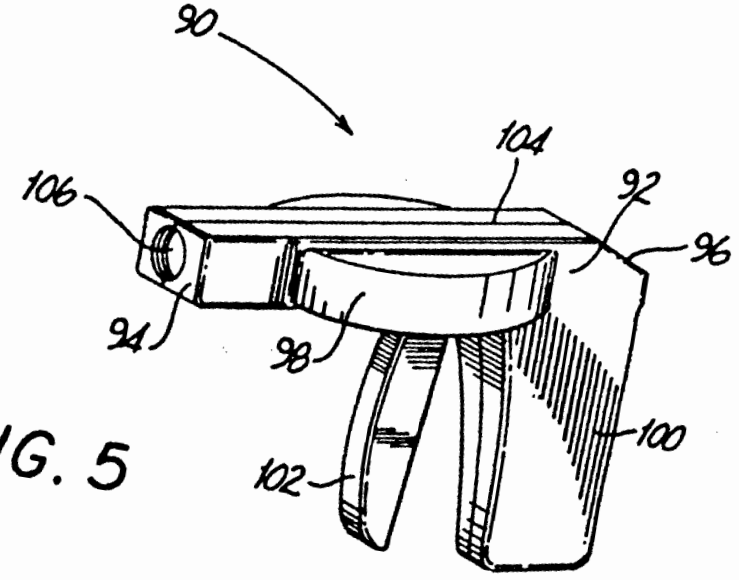

FIG. 5

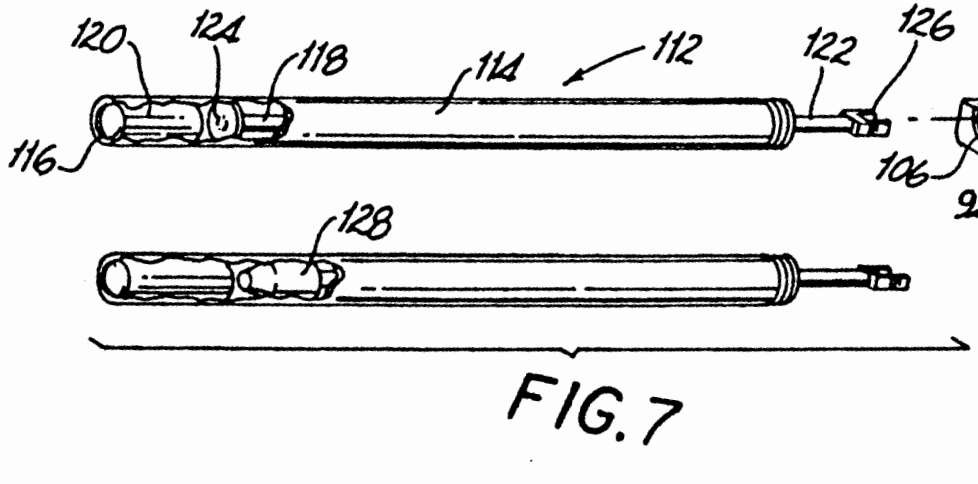

FIG. 7

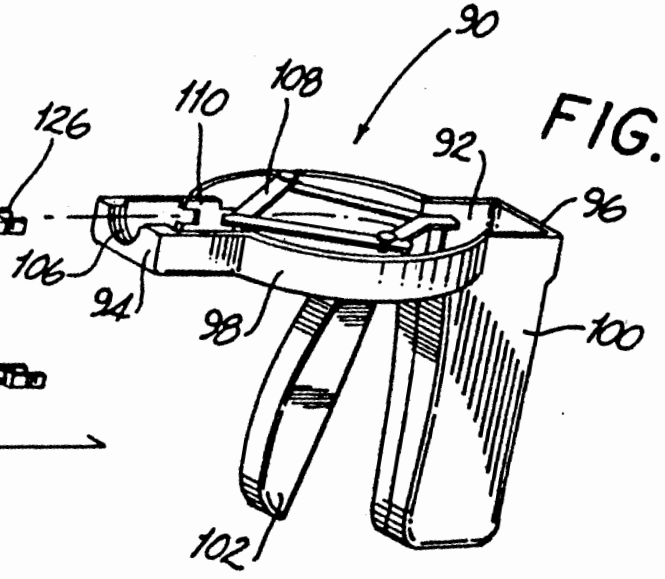

FIG. 6

ENDOSCOPIC MATERIAL DELIVERY DEVICE

BACKGROUND OF THE INVENTION

1. Field of the Invention

This invention relates to a device for delivering material to a remote location and more particularly, to an instrument for endoscopic delivery of a quantity of medicament or material to a remote location within the body.

2. Description of the Related Art

In laparoscopic procedures, surgery is performed through a small incision or entrance wound in the skin with the abdominal cavity expanded by gas insufflation. Laparoscopic procedures generally require that any instrumentation inserted into the body be sealed so that gases do not enter or exit the body through the incision. Further, laparoscopic procedures often require the surgeon to operate on organs or tissues which are far removed from the incision, thereby requiring that any instruments to be used in such procedures be both elongated and narrow.

In open surgery, hemostasis is achieved by using agents such as collagen and cellulose in either a preformed pad or a loose powdered form. These hemostatic agents are applied to sites of hemorrhage or bleeding intraoperatively and, due to their thromboplastic nature, cause cessation or reduction of bleeding. A hemostatic collagen paste which may be used in this manner is disclosed in U.S. Pat. No. 4,891,359 to Saferstein et al. These materials are easily applied by hand during open surgery because the site of intended application is readily accessible.

The use of hemostatic agents and other medicaments in laparoscopic surgery poses unique problems due to the limited access to the site of application and the difficulty of passing material to the site via a cannula or trocar. During laparoscopic procedures, materials, such as adhesion barriers, have been delivered to an intended site of application by grasping the material with a micrograsper or other similar instrument, and extending the instrument through a cannula placed in an incision or entrance wound. However, it would be difficult to repetitively deliver a metered quantity of fluid or powdered material in such a manner. Once the material has been introduced into the abdominal cavity, post-insertion manipulation of the material is also extremely difficult.

In addition, because of the difficulty and expense of cleaning and sterilizing surgical instruments between uses, there is an increasing demand for instruments which are disposable after use in a single surgical procedure rather than permanent and reusable. Additionally, instrumentation which requires the use of external power supplies is less efficient for clinical applications.

SUMMARY OF THE INVENTION

An endoscopic device is disclosed for delivering a quantity of material to an organ or tissue area within a body. The device includes an endoscopic portion having a passageway formed therein, material containment means communicating with said passageway and actuating means for causing the delivery of a quantity of material from the material containment means. The device may further include separate propellant containment means for dispensing powder or particulate medicaments. Alternatively, the material containment means may also contain a propellant. The material containment means may comprise a reservoir integrally formed in the endoscopic portion or in a handle portion. Preferably, the containment means comprises a removable cartridge.

The actuating means may be pivotal and may include a trigger. A plunger means operatively connected to the trigger may also be included for advancing distally against the containment means in such a manner as to cause a predetermined quantity of medicament to be expelled from the containment means such as, for example by a propellant.

In another aspect the present invention, the material for delivery to the intended site of application is disposed in the axial passageway of the endoscopic portion of the delivery device. In this instance, the material may comprise a preformed hemostatic treatment pad or in the alternative the material may comprise a fluid or powdered medicament. Actuating means are operatively connected to the endoscopic portion for causing a predetermined quantity of the material to be delivered from the endoscopic portion.

In yet another aspect of the present invention, the delivery device is provided with tamping means for manipulating the material delivered.

Further features of the invention will become more apparent from the accompanying drawings and the following detailed description of the invention.

BRIEF DESCRIPTION OF THE DRAWINGS

Preferred embodiments of the invention will be described hereinbelow with reference to the drawings. In the drawings and the description which follows, "proximal" means the end closest to the operator and "distal" means the end farthest from the operator.

FIG. **1** is a perspective view of the handle portion of an endoscopic material delivery device of the subject invention;

FIG. **2** is a perspective view, with parts broken away, of a loaded endoscopic material delivery device;

FIG. **3** is a perspective view of an alternate embodiment of the handle portion of an endoscopic material delivery device of the subject invention;

FIG. **4** is a perspective view, with parts broken way, of a loaded endoscopic material delivery device;

FIG. **5** is a perspective view of a third embodiment of the handle portion of the endoscopic material delivery device of the subject invention;

FIG. **6** is a perspective view, with portions removed, of a loaded endoscopic material delivery device; and

FIG. **7** is a perspective view in partial cutaway of an alternative cartridge means adapted for use in the device of FIG. **6**.

DETAILED DESCRIPTION OF THE PREFERRED EMBODIMENTS

A preferred embodiment of the endoscopic material delivery device of the subject invention is illustrated in FIGS. **1** and **2** and is designated generally by reference numeral **10**. The delivery device **10** includes a pistol-like handle portion having a longitudinal barrel portion **12** with a grip portion **14** depending transversely from the barrel portion **12**. Portion **14** may be generally rectangular in cross-section as shown or may have any configuration which may be easily and comfortably gripped during operations. Barrel portion **12** includes a cover **16** which is attached thereto by an integral hinge **18** located at the proximal end **20** of the barrel portion **12**. A

port 22 is formed in the distal end 24 of barrel portion 12 for receiving an elongated disposable endoscopic shaft 26. More particularly, a tapered proximal end 28 of endoscopic shaft 26 may be inserted through the port 22 formed in barrel portion 12 so as to be frictionally or mechanically engaged therein for operations. The endoscopic shaft 26 is formed with an axial passageway 30 through which a metered quantity of material may be delivered to the intended site of application, for example, within the abdominal cavity.

The delivery device 10 further includes a movable trigger 32 which depends transversely from barrel portion 12 adjacent portion 14. In particular, trigger 32 is mechanically linked to a piston mechanism 34 disposed in the barrel portion 12. Piston mechanism 34 includes a circular plunger 36 depending from a shaft 38 which is slidably maintained in a sleeve 40. The trigger 32 is operative to cause shaft 38 to slide within sleeve 40 so that plunger 36 may be moved into contact with the rear end 42 of containment means 44, here shown as a replaceable cylindrical containment cartridge. It should be understood that the containment means 44 may alternatively be a reservoir integrally formed within the barrel 12.

Cartridge 44 which may contain a propellent 45 and/or a powdered or fluid medicament, is maintained in barrel portion 12 on a pair of spaced apart support flanges 46 and 48 disposed adjacent the distal end 24 of barrel portion 12. Furthermore, cartridge 44 may be formed with a penetrable membrane 50 disposed at the front end 52 thereof. The membrane 50 is easily pierced by the tapered end 28 of the endoscopic shaft 26 which extends through the port 22 as the cartridge 44 is urged in a distal direction by the plunger 36.

While described in terms of delivering a medicament, the device of the present invention can be used to deliver a wide variety of fluid, powdered or solid materials. Such materials include, but are not limited to pharmaceuticals, materials having anti-adhesion properties, anti-coagulants, growth factors, osteogenic factors, antibiotics, anti-fungals, immunosuppressive agents, anti-inflammatory agents, irrigating fluids, disinfectants, preservatives, diagnostic agents (dyes, etc.) antihistamines, hormones, enzymes, peptides and/or steroids. Solid materials which may be delivered include woven materials, gels, capsules, molded materials and any other solid form which fits within or may be made to fit within the endoscopic portion of the device.

In operation, a cartridge 44 is placed in support flanges 46 and 48 in the barrel portion 12 of the delivery device 10 and the cover 16 is closed. Thereupon, the endoscopic shaft 26 is inserted into port 22 at end 24 of barrel portion 12. At such a time, the tapered end 28 of endoscopic shaft 26 is disposed proximate the membrane 50 at the front end 52 of cartridge 44. Thereafter, the end 54 of endoscopic shaft 26 is inserted through a cannula (not shown) previously inserted in an incision or entrance wound. When trigger 32 is depressed, the piston mechanism 34 slides forward and plunger 36 is urged against the rear end 42 of cartridge 44 driving the cartridge distally until membrane 50 is pierced by the tapered end 28 of endoscopic portion 26 causing the propellent therein to propel a metered quantity of medicament through the passageway 30 in endoscopic shaft 26 to be delivered into the abdominal cavity.

When cartridge 44 contains a fluid medicament, a first squeeze of the trigger 32 will cause plunger 36 to contact the rear end 42 of cartridge 44. Upon release of the trigger spring means (not shown) urge the trigger back to its original position. Subsequent squeezes of the trigger 32 will move the plunger 36 a predetermined distance into cartridge 44, thus forcing a metered amount of medicament out of cartridge 44 and into the endoscopic portion of the instrument. If the fluid medicament has a high viscosity, a series of squeezes may be required to prime the instrument before the metered amount of medicament is delivered out the distal end of the endoscopic portion.

In a variation of this embodiment, the passageway 30 of endoscopic portion 26 serves as the containment means and is pre-loaded with the medicament to be delivered. Actuating means may directly cause the material to be expelled from the endoscopic portion or, as shown in the figures, the actuating means may act upon container 44 which contains a non-toxic, inert delivery substance which merely acts to force a metered quantity of the medicament out of the endoscopic portion. That is, as plunger 36 advances within cartridge 44, a metered amount of the delivery substance is forced out of cartridge 44 and into endoscopic portion 26, which in turn forces a metered quantity of the medicament out of the distal end of passageway 30. A series of endoscopic portions each loaded with a different medicament may be provided in a kit thus allowing the same handle portion to deliver each medicament as needed without mixing or contamination of the individual medicaments.

Referring to FIGS. 3 and 4, another embodiment of the endoscopic material delivery device of the subject invention is illustrated and is designated generally by reference numeral 60. Delivery device 60 includes a handle portion having a longitudinal barrel portion 62 and a hollow grip portion 64 having a generally circular cross-section projecting transversely from barrel portion 62. A movable trigger 66 depends transversely from barrel portion 62 adjacent portion 64. Barrel portion 64 includes a cover 68 integrally attached at the proximal end 70 thereof and a port 72 formed in the proximal end 74 thereof for receiving the tapered end 28 of an endoscopic shaft 26. As stated previously, the tapered end 28 of the endoscopic shaft 26 is provided for piercing the penetrable membrane 50 at the front end of cartridge 44. The delivery device 60 is further provided with a cap member 76 which is threadably engaged in the bottom 78 of handle portion 64 and which may be readily removed to insert a canister of compressed gas 80.

Trigger 66 is mechanically linked to the canister of compressed gas 85 80 in a known manner known, such as that described in U.S. Pat. No. 4,349,028, the entire disclosure of which is incorporated herein by reference. In addition, a conduit element 82 in barrel portion 62 is connected to the compressed gas canister 80. Conduit element 82 conducts compressed gas from the canister 80 to the rear end 42 of replaceable cartridge 44 which preferably contains a medicament in a powdered form.

In operation, the trigger 66 may be depressed in such a manner as to cause compressed gas to exit canister 80. Thereupon, compressed gas from canister 80 is conducted through conduit element 82 in such a manner as to exert a force upon the rear end 42 of cartridge 44, thereby causing a metered quantity of medicament to be delivered from cartridge 44 through the endoscopic shaft 26 to the intended site of application.

FIGS. 5 and 6 depict another embodiment of the endoscopic material delivery device of the subject invention designated generally by reference numeral 90.

The delivery device **90** includes a longitudinal barrel portion **92** having a proximal end **94**, a distal end **96** and a substantially circular midsection **98**. A grip portion **100** and a trigger **102** project transversely from barrel portion **92**. Barrel portion **92** is provided with a cover member **104** and a threaded port **106** formed in the proximal end **94** thereof. A four bar linkage **108** is operatively disposed in the circular midsection **98** of barrel portion **92**. Linkage **108** includes a generally U-shaped key **110** arranged adjacent the proximal end **94** of barrel portion **92**. Linkage **108** is operably connected to trigger **102** which when depressed causes linkage **108** to compress in such a manner that the U-shaped key **110** advances distally in barrel portion **92**.

An endoscopic member **112** is threadably engageable in port **106** formed in the barrel portion **92**. Endoscopic member **112** comprises an elongated tube portion **114** having an axial passageway **116** in which is disposed plunger member **118**. A pre-formed treatment pad **120** or a reservoir of medicament is located in the tube **114** distal to the plunger member **118**. More particularly, plunger member **118** includes a shaft portion **122** having a circular portion **124** at the proximal end thereof disposed internal of the tube portion **114** and a generally U-shaped key **126** formed at the proximal end thereof disposed external of the tube portion **114**. Key **126** on plunger member **118** is engageable with key **110** on linkage **108**.

In operation, the endoscopic member **112** may be engaged in the threaded port **106** formed in barrel portion **92** in such a manner so that keys **126** and plunger member **118** are interlocked. Thereupon, trigger **102** may be depressed so as to cause the four bar linkage **108** to compress. At such a time, plunger member **118** is caused to advance proximally in the endoscopic member **112** and force the pre-formed treatment pad **120** from the axial passageway **116** to the intended area of treatment within the abdominal cavity. Thereafter, the portion **124** follows the pre-formed treatment pad **120** out of the proximal end of the endoscopic member **112** and protrudes therefrom. The portion **124** may serve as tamping means. Once extended distally from the endoscopic portion the tamping means may then be manipulated to maneuver the pre-formed treatment pad **120** in a desired position or to manipulate any material delivered from the device.

When the tube portion **114** includes a reservoir of medicament rather than a preformed pad, depressing the trigger **102** advances the plunger member **118** distally to urge a metered quantity of the material from the endoscopic member **112** to the intended site of application.

In an alternate embodiment shown in FIG. **7**, the tamping portion of the plunger member **118** may be a frusto-conical shaped portion **128** rather than circular portion **124**. Alternatively, portion **124** may be formed with an axial aperture through which medicament stored behind the portion **124** may, upon squeezing the trigger **102**, be delivered under pressure.

In an alternative embodiment (not shown) tamping means are disposed in a second passageway formed in the endoscopic portion, and actuating means similar to that described above for delivering material, may be used to deploy the tamping means. The tamping means itself may advantageously be fabricated from an elastic material, such as a synthetic or natural rubber or a shape memory alloy, such as for example the alloys described in U.S. Pat. No. 4,665,906 the disclosure of which is incorporated herein by reference. In a particularly useful embodiment the elastic tamping means is disposed in the second passageway in a deformed state and assumes a substantially undeformed state when deployed out of the passageway to facilitate manipulation of the material just delivered.

Although the invention has been described with reference to preferred embodiments it is apparent that several changes may be made without departing from the spirit and scope of the subject invention.

For example, it may be readily appreciated that the endoscopic portion may be formed integrally with the barrel portion of the device. In this instance the entire device may be disposable. Furthermore, the trigger portion may be disposed substantially parallel to the longitudinal axis of the barrel portion for providing a palm-grip arrangement.

In addition, a separate propellant containment means and medicament containment means may be provided rather than having a combined propellant and medicament cartridge element. In this instance, the barrel portion of the device may be provided with means for supporting and/or interconnecting both cartridges.

Furthermore, it may be readily appreciated that the barrel portion of the device may be formed with an integral reservoir within which medicament is stored for delivery. When the medicament is in a powdered form, it may be propelled from the reservoir by a compressed gas supply stored in the handle portion of the device.

What is claimed is:

1. An endoscopic device for delivering a quantity of material comprising:

a handle portion;

an elongated endoscopic portion having a proximal end extending from said handle portion and a distal end, said endoscopic portion having a passageway extending therethrough configured to emit material only from said distal end;

material containment means disposed within said handle portion for storing at least a particulate material to be delivered and a pressurized propellant for propelling said particulate material from said material containment means, said material containment means including seal means communicating with a proximal end of said passageway for permitting the propulsion of said particulate material therefrom; and

actuation means operably connected to said material containment means for causing said seal means to open and permit a quantity of said particulate material to be propelled from said material containment means, through said passageway, out of said distal end of said endoscopic portion.

2. An endoscopic device as recited in claim **1** wherein said handle portion is dimensioned and configured for housing said actuation means.

3. An endoscopic device as recited in claim **2** wherein port means is formed in said handle portion for operatively receiving said proximal end of said endoscopic portion.

4. An endoscopic device as recited in claim **2** wherein said handle portion comprises a barrel portion defining a longitudinal axis and a grip portion which depends from said barrel portion, said barrel portion configured for housing said material containment means.

5. An endoscopic device as recited in claim 4 wherein said material containment means comprises a cartridge configured for removal from said barrel portion.

6. An endoscopic device as recited in claim 5 wherein said barrel portion further comprises flange means for supporting said removable cartridge.

7. An endoscopic device as recited in claim 5 wherein said cartridge is formed integral with said material containment means.

8. An endoscopic device as recited in claim 5 wherein said material contained within said cartridge is medicament.

9. An endoscopic device as recited in claim 1 wherein said actuation means includes trigger means movably connected to plunger means for urging said plunger means against said material containment means to cause said seal means to permit pressurized propellent to exit therefrom propelling therewith a quantity of particulate material from said material containment means.

10. A device for endoscopic delivery of a material comprising:

a handle portion;

an endoscopic delivery portion extending distally from said handle portion and having a passageway extending therethrough;

material containment means disposed within said handle portion and communicating with said passageway for storing at least a material to be delivered and a pressurized propellant for propelling said material through said endoscopic delivery portion, said material containment means including seal means for permitting the propulsion of said material therefrom; and

pivotal actuating means operatively connected to said material containment means for causing said seal means to open and permit a quantity of said material to be delivered from said material containment means.

11. A device as in claim 10 wherein said endoscopic delivery means comprises an elongated endoscopic portion having opposed proximal and distal ends.

12. A device as in claim 11 wherein said passageway is an axial passageway extending from said proximal to said distal end of said endoscopic portion.

13. A device as in claim 12 wherein said handle portion defines a barrel section for housing said material containment means, said proximal end of said endoscopic portion being connected to said barrel section.

14. A device as in claim 13 further comprising port means defined in said barrel section for operatively receiving said proximal end of said endoscopic portion.

15. A device as in claim 13 wherein said material containment means comprises a cartridge configured for removal from said barrel section.

16. An endoscopic device for delivering a quantity of material comprising:

a handle portion;

an endoscopic portion having opposed proximal and distal ends, said proximal end connected to said handle portion and having a passageway extending therethrough from said proximal end to said distal end thereof;

material containment means disposed within said handle portion for storing at least a material to be delivered under pressure, said material containment means including seal means in communication with a proximal end of said passageway for permitting the propulsion of said material therefrom;

a trigger movably connected to said handle portion; and

a plunger operatively connected to said trigger for urging said plunger distally against said material containment means to cause said seal means to open and permit at least a portion of the material contained therein to be expelled therefrom so as to be delivered out of said distal end of said endoscopic portion.

17. An endoscopic device for delivering a metered quantity of material comprising:

a handle portion having a longitudinally extending barrel portion and having opposed proximal and distal ends;

a port formed in said distal end of said barrel portion;

a trigger movably connected to said handle portion;

an elongated endoscopic member having a proximal end portion engageable in said port and having a passageway extending from said proximal end portion to a distal end thereof;

a removable cartridge disposed in said handle portion and communicating with said passageway, said cartridge containing a pressurized propellent and material for delivery through said passageway in said endoscopic member, said cartridge including a frangible seal member for permitting the pressurized propulsion of said material therefrom; and

plunger means operatively connected to said trigger for urging said cartridge in a distal direction causing said frangible seal member to be pierced and permit a metered quantity of said material to be expelled therefrom and delivered out of said distal end of said endoscopic member.

18. An endoscopic device as in claim 17 further comprising a grip portion depending from said barrel portion and wherein said trigger is movable between a first position spaced from said grip portion and a second position adjacent said grip portion.

* * * * *

X

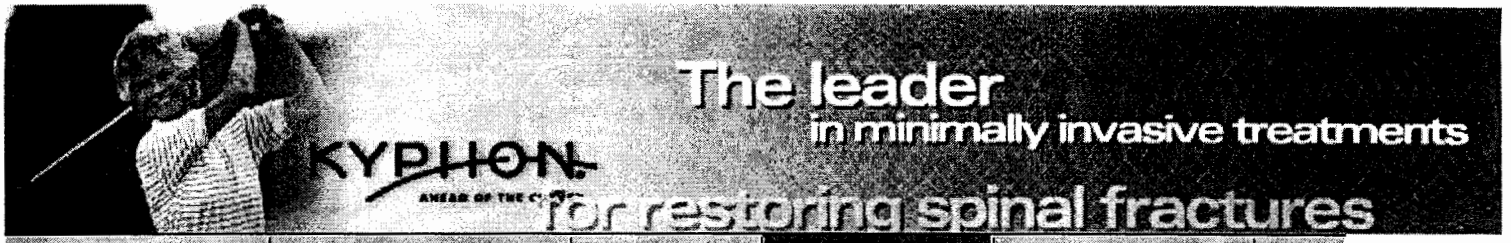

©2004-2005 Kyphon All Rights Reserved
Legal Notice

Releases

Kyphon Receives FDA Clearance to Market KyphX® HV-R™ Bone Cement for Use in Kyphoplasty

Kyphon to Promote Clinical Outcomes of Kyphoplasty to the Medical Community

SUNNYVALE, Calif., April 5, 2004 - Kyphon Inc. (Nasdaq: KYPH) announced today that it has received 510(k) clearance from the Food and Drug Administration (FDA) to market KyphX® HV-R™ Bone Cement for the fixation of osteoporosis-related pathological fractures of the vertebral body during kyphoplasty. The finding of substantial equivalence was based on clinical data supporting certain short and long term outcomes of kyphoplasty.

"This clearance is a significant event in the evolution of balloon kyphoplasty as a treatment option for patients with spinal fractures related to osteoporosis," commented Richard Mott, President and Chief Executive Officer of Kyphon. "By launching our KyphX HV-R Bone Cement in the United States, we will be able to provide and promote a complete procedural solution for surgeons who treat patients with these fractures. In addition, we can now train spine specialists on appropriate techniques for delivering bone cement during balloon kyphoplasty.

Further, we believe clearance to promote the cleared clinical outcomes of kyphoplasty to the referring physician community and among patients and caregivers will enhance our ability to penetrate our core market over the long term."

Kyphon's proprietary KyphX HV-R (High Viscosity - Radiopaque) polymethylmethacrylate (PMMA) Bone Cement is designed to have the desired handling and visualization characteristics for minimally invasive surgery in the spine. The cleared indication for use is for the treatment of pathological fractures of the vertebral body due to osteoporosis using a kyphoplasty procedure. The Company is initiating launch activities in preparation of an anticipated second quarter full U.S. market release.

"Our KyphX HV-R Bone Cement is the first material specifically indicated for the treatment of osteoporotic fractures, and will further Kyphon's position as a leading innovator in minimally invasive spinal fracture therapies," concluded Mott.

Balloon kyphoplasty is a minimally invasive spinal surgery that has been demonstrated to achieve sustained vertebral body height restoration and angular deformity correction in patients with vertebral body compression fractures caused by osteoporosis. Substantial equivalence was determined based on clinical data provided in the 510(k) demonstrating that the procedure is associated with significant and maintained reduction in back pain, improvement in quality of life, and increase in ability to perform activities of daily living and patient mobility. As with most surgical procedures, there are risks associated with kyphoplasty, including serious complications, although the complication rate with kyphoplasty has been demonstrated to be low.

Kyphon intends to discuss further the impact on its business of the clearance of KyphX HV-R during the Company's first quarter earnings conference call.

About Kyphon Inc.

Kyphon develops and markets medical devices designed to restore spinal function using minimally invasive technology. The Company's initial products are used in balloon kyphoplasty, a minimally invasive procedure to treat spinal fractures caused by osteoporosis. For more information, visit the company's web site at http://www.kyphon.com.

Kyphon and KyphX are registered trademarks of Kyphon Inc.

This press release contains forward-looking statements within the meaning of the U.S. Private Securities Litigation Reform Act of 1995. Forward-looking statements include, but are not limited to, those that use words such as "believes," "expects," "anticipates," "hopes," "plans," "projects," and words of similar effect, and specifically include the Company's future financial projections and anticipated business direction and performance. Forward-looking statements are based on management's current, preliminary, expectations and are subject to risks and uncertainties, which may cause the Company's actual results to differ materially from the statements contained herein. Further information on potential risk factors that could affect Kyphon, its business and its financial results are detailed in the Company's periodic filings with the Securities and Exchange Commission, including, but not limited to, those risks and uncertainties listed in the section entitled "Management's Discussion and Analysis of Financial Condition and Results of Operations - Factors Affecting Future Operating Results," commencing on page 32 of Kyphon's quarterly report on Form 10-K for the year ended December 31, 2003, filed with the Securities and Exchange Commission on March 10, 2004. Kyphon undertakes no obligation to release publicly any revisions to any forward-looking statements contained herein to reflect events or circumstances after the date hereof or to reflect the occurrence of unanticipated events.