IN THE UNITED STATES DISTRICT COURT
FOR THE DISTRICT OF DELAWARE

KYPHON INC. Plaintiff, v. DISC-O-TECH MEDICAL TECHNOLOGIES LTD., and DISC ORTHOPAEDIC TECHNOLOGIES, INC. Defendants.	C.A. 04-204-JJF **PUBLIC VERSION**

DECLARATION OF THOMAS L. HALKOWSKI IN SUPPORT OF KYPHON INC'S OPENING BRIEF REGARDING CONSTRUCTION OF THE DISPUTED CLAIM TERMS FOR THE PATENTS-IN-SUIT

VOLUME 1 OF 2

DATED: April 6, 2005

IN THE UNITED STATES DISTRICT COURT
FOR THE DISTRICT OF DELAWARE

KYPHON INC., Plaintiff, v. DISC-O-TECH MEDICAL TECHNOLOGIES LTD., and DISC ORTHOPAEDIC TECHNOLOGIES, INC., Defendants.	C.A. 04-204-JJF **PUBLIC VERSION**

DECLARATION OF THOMAS L. HALKOWSKI IN SUPPORT OF KYPHON INC.'S OPENING BRIEF REGARDING CLAIM CONSTRUCTION OF THE DISPUTED CLAIM TERMS FOR THE PATENTS-IN-SUIT

I, Thomas L. Halkowski, declare as follows:

1. I am a Principal of Fish & Richardson P.C., counsel of record in this action for Kyphon Inc. I am a member of the Bar of the State of Delaware and of this Court. I have personal knowledge of the matters stated in this declaration and would testify truthfully to them if called upon to do so.

2. Exhibit A is confidential under the protective order and filed under seal.

3. Attached hereto as Exhibit B is a true and correct copy of United States Patent No. 5,108,404.

4. Attached hereto as Exhibit C is a true and correct copy of Forbes article "The Inflatable Spine", dated June 7, 2004.

5. Attached hereto as Exhibit D is a true and correct copy of Orthopedics Today article "Kyphoplasty employs bone balloon to correct kyphosis due to fractures", dated November 1999.

6. Attached hereto as Exhibit E is a true and correct copy of a "News Channel 12 Connecticut" CD bates numbered KY375745, dated July 2001.

7. Attached hereto as Exhibit F is a true and correct copy of United States Patent No. 4,969,888.

8. Attached hereto as Exhibit G is a true and correct copy of United States Patent No. 6,235,043 B1.

9. Attached hereto as Exhibit H is a true and correct copy of United States Patent No. 6,241,734 B1.

10. Attached hereto as Exhibit I is a true and correct copy of United States Patent No. 6,613,054 B2.

11. Attached hereto as Exhibit J is a true and correct copy of *A Patient's Guide to Osteoporosis*, at http://www.spineuniversity.com/public/spinesub.asp?id=65 (last visited November 23, 2004).

12. Attached hereto as Exhibit K is a true and correct copy of *Osteoporosis, Making the Diagnosis of Osteoporosis*, at http://www.endocrineweb.com/osteoporosis/diagnosis.html (last visited November 10, 2004).

13. Attached hereto as Exhibit L is a true and correct copy of *What Everyone Should Know About Osteoporosis*, THE DAILY CAMPUS, November 2, 2004, at http://www.dailycampus.com/global_user_elements/printpage.cfm?storyid=789865 (last visited November 10, 2004).

14. Attached hereto as Exhibit M is a true and correct copy of 1 The Adult Spine, Principles and Practice, Vol. 1, p. 491 (1991).

15. Attached hereto as Exhibit N is a true and correct copy of United States Patent Nos. 5,192,282; 4,981,481; and 4,513,754.

16. Exhibit O is confidential under the protective order and filed under seal.

17. Attached hereto as Exhibit P is a true and correct copy of excerpts of the Deposition of Mark Reiley, M.D., dated November 3, 2004.

18. Exhibit Q is confidential under the protective order and filed under seal.

19. Attached hereto as Exhibit R is a true and correct copy of David Halliday et al., *Fundamentals of Physics*, page 351 (5th ed. 1997).

20. Attached hereto as Exhibit S is a true and correct copy of excerpts the deposition of William S. Rosenberg, dated November 22, 2004.

21. Attached hereto as Exhibit T is a true and correct copy of United States Patent No. 4,488,549.

22. Attached hereto as Exhibit U is a true and correct copy of excerpts of the Deposition of John C. Eisenhart, dated March 17, 2005.

23. Attached hereto as Exhibit V is a true and correct copy of excerpted definitions from The American Heritage Dictionary, Second College Edition © 1982.

24. Attached hereto as Exhibit W is a true and correct copy of United States Patent No. 5,312,333.

25. Attached hereto as Exhibit X is a true and correct copy of Kyphon Press Release, *Kyphon Receives FDA Clearance to Market KyphX® HV-R ™ Bone Cement for Use in Kyphoplasty*, dated April 5, 2004 at http://kyph.client.shareholder.com/ReleaseDetail.cfm?ReleaseID=132205 (last visited April 6, 2005).

I declare under penalty of perjury that the foregoing is true and correct.

Dated: April 6, 2005

s/ Thomas L. Halkowski
Thomas L. Halkowski

CERTIFICATE OF SERVICE

I hereby certify that on this 6th day of April 2005, a true and correct copy of the DECLARATION OF THOMAS L. HALKOWSKI IN SUPPORT OF KYPHON INC.'S MOTION FOR A PRELIMINARY INJUNCTION was caused to be served on the attorneys of record at the following addresses as indicated:

VIA HAND DELIVERY
Maryellen Noreika
Morris Nichols Arsht & Tunnell
1201 North Market Street, Suite 2100
P.O. Box 1347
Wilmington, DE 19899-1347

Attorneys for Defendants
Disc-O-Tech Medical Technologies Ltd. and Disc Orthopaedic Technologies, Inc.

VIA FEDERAL EXPRESS
Julie A. Petruzzelli
Eric S. Namrow
Venable LLP
575 7th Street, N.W.
Washington, DC 20004

Attorneys for Defendants
Disc-O-Tech Medical Technologies Ltd. and Disc Orthopaedic Technologies, Inc.

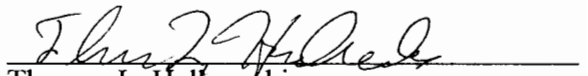

Thomas L. Halkowski

80023869.doc

A

REDACTED DOCUMENT

B

US005108404A

United States Patent [19]

Scholten et al.

[11] Patent Number: 5,108,404

[45] Date of Patent: * Apr. 28, 1992

[54] **SURGICAL PROTOCOL FOR FIXATION OF BONE USING INFLATABLE DEVICE**

[76] Inventors: **Arie Scholten**, 4175 Tamayo St., Fremont, Calif. 94536; **Mark A. Reiley**, 333 63rd St., Oakland, Calif. 94618

[*] Notice: The portion of the term of this patent subsequent to Nov. 13, 2007 has been disclaimed.

[21] Appl. No.: **567,862**

[22] Filed: **Aug. 15, 1990**

Related U.S. Application Data

[63] Continuation-in-part of Ser. No. 308,724, Feb. 9, 1989, Pat. No. 4,969,888.

[51] **Int. Cl.**[5] **A61B 17/56**

[52] **U.S. Cl.** **606/94**; 606/60; 606/95

[58] **Field of Search** 606/60, 94, 95, 191, 606/192, 193, 194

[56] **References Cited**

U.S. PATENT DOCUMENTS

1,965,653	7/1934	Kennedy	606/192
3,112,743	12/1963	Cochran et al.	128/92 VP
3,889,665	6/1975	Ling et al.	128/92 VP X
4,462,394	7/1984	Jacobs	128/92 VP
4,488,549	12/1984	Lee et al.	128/92 VP
4,627,434	12/1986	Murray	128/92 VP
4,714,478	12/1987	Fischer	623/23

FOREIGN PATENT DOCUMENTS

15864	10/1912	France	606/192 X
512456	9/1939	United Kingdom	606/192

OTHER PUBLICATIONS

Howmedica Exeter Pressurizer, 1979, 2 pages.
Journal of B & J Surgery, pp. 1665-1676, vol. 54A, #8, Dec. 1972.

Primary Examiner—Robert A. Hafer
Assistant Examiner—Kevin G. Rooney
Attorney, Agent, or Firm—Townsend and Townsend

[57] **ABSTRACT**

A method and apparatus for the fixation of osteoporotic and non-osteoporotic bones and especially vertebral body compression fractures, Colles' fractures and fractures of the proximal humerus. The method of the present invention includes a series of steps including penetrating the bone having the fracture with a guide pin, drilling the bone marrow of the bone to enlarge the cavity to be treated, following which a bone specific inflatable device is inserted in the cavity and inflated. The expansion of the device causes a compacting of the bone marrow against the inner surface of the outer wall of the bone to be treated to further enlarge the cavity. When this occurs, a flowable synthetic bone material or methyl methacrylate cement is directed into the cavity and allowed to set to a hardened condition. Following this, the instruments are removed. In the fixation of vertebral body fractures, an elliptical inflatable device is first used to initiate the compacting of the bone marrow, following which a substantially cylindrical inflatable device is inserted into the cavity to further compact the bone marrow in all directions. In the fixation of Colles' fractures and proximal humerus fractures, a gourd-shaped inflatable device is used to compact the bone marrow.

29 Claims, 11 Drawing Sheets

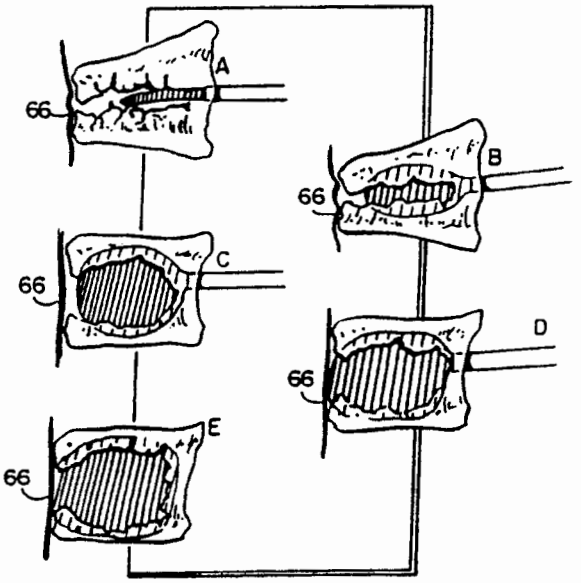

FIG.1

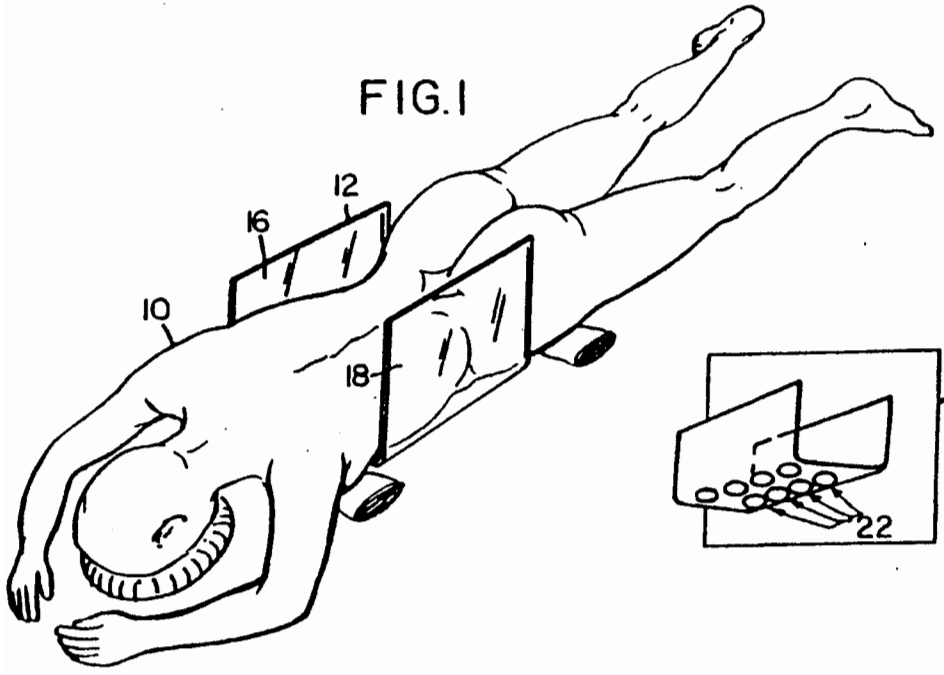

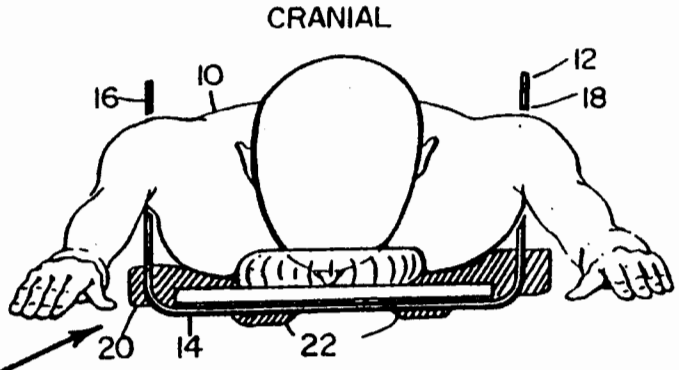

FIG.2

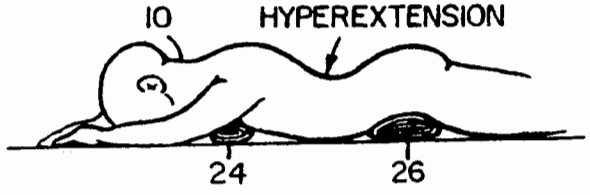

FIG.3

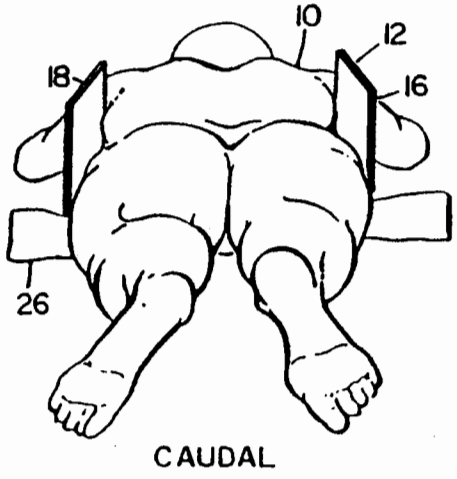

FIG.4

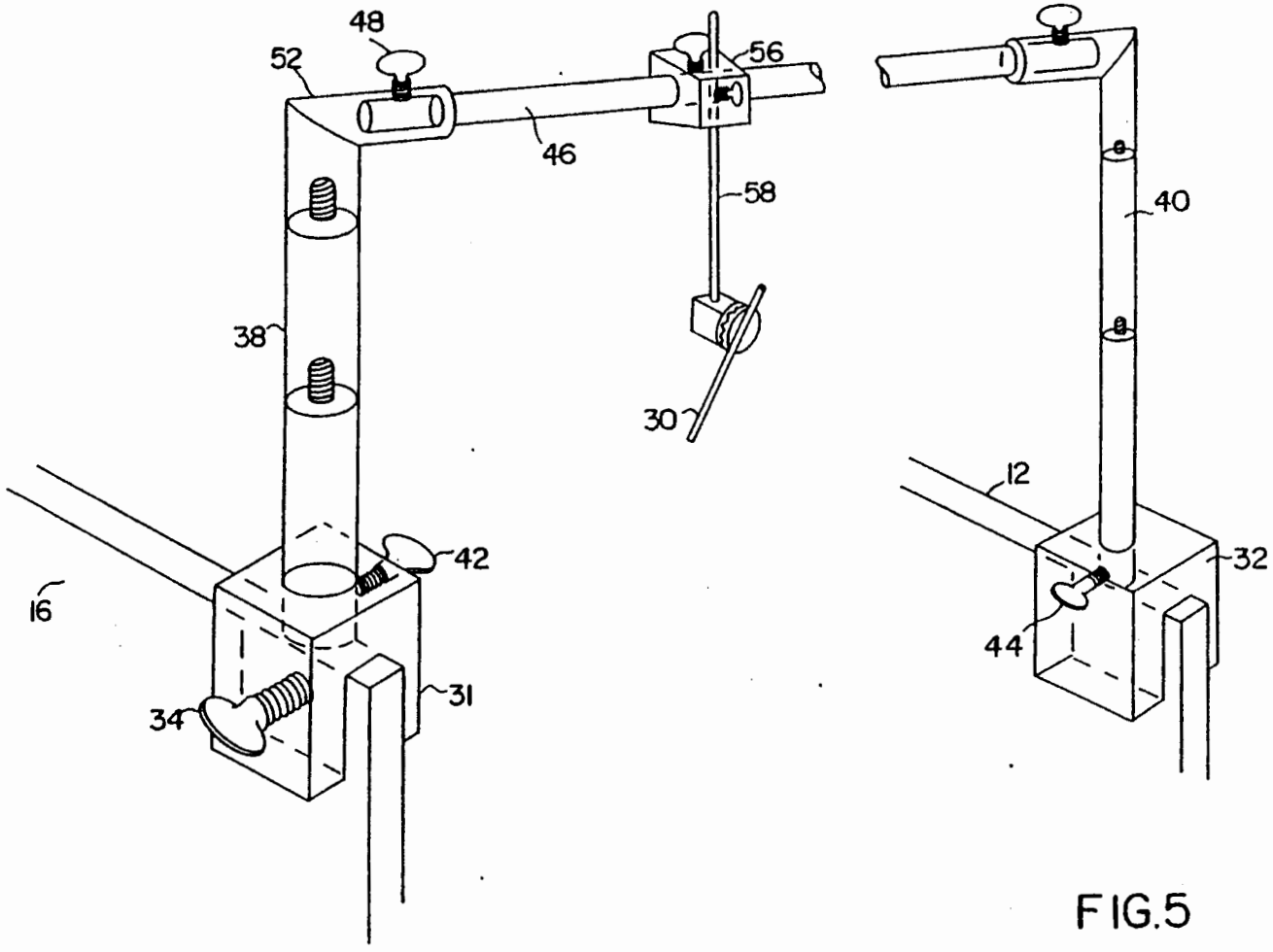

FIG.5

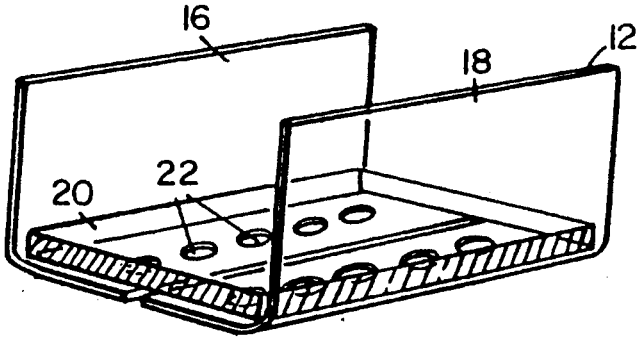

FIG.6

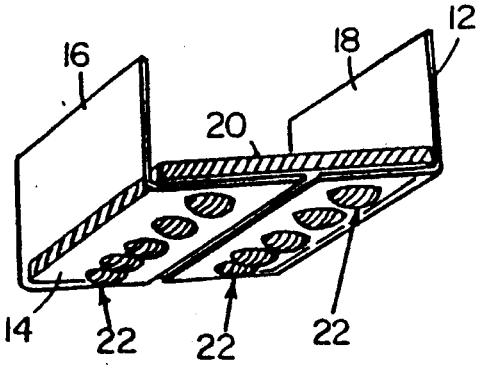

FIG.7

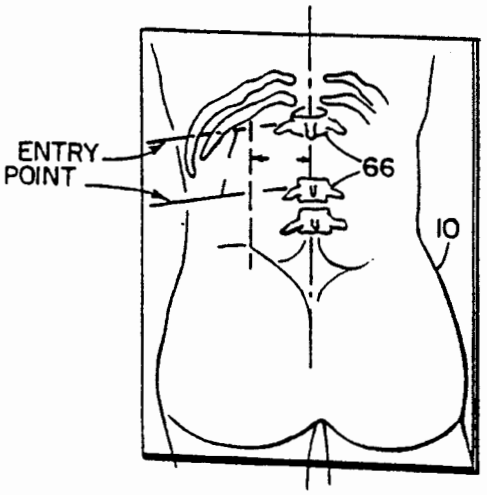

FIG.8

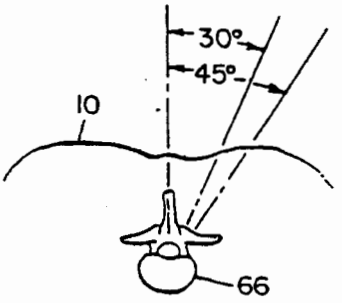

FIG.9

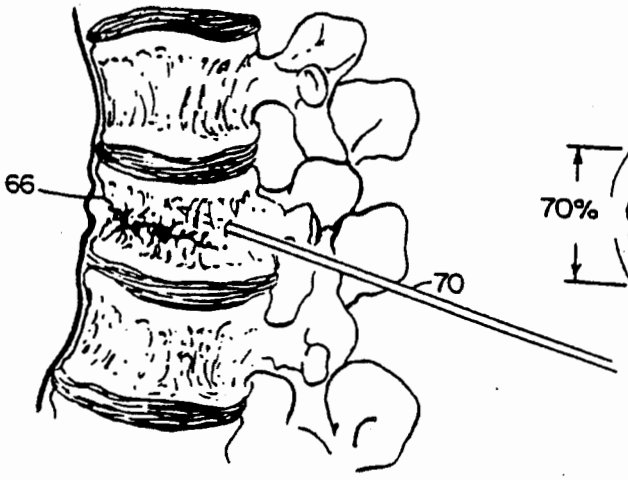

FIG.10

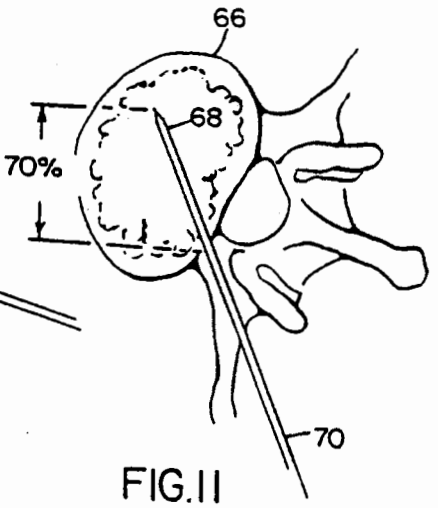

FIG.11

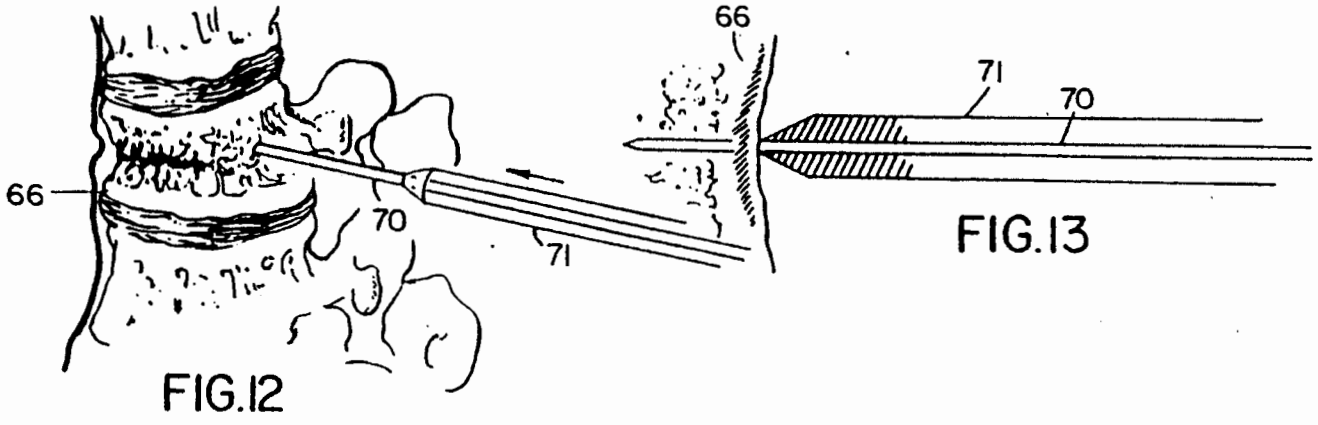

FIG.12

FIG.13

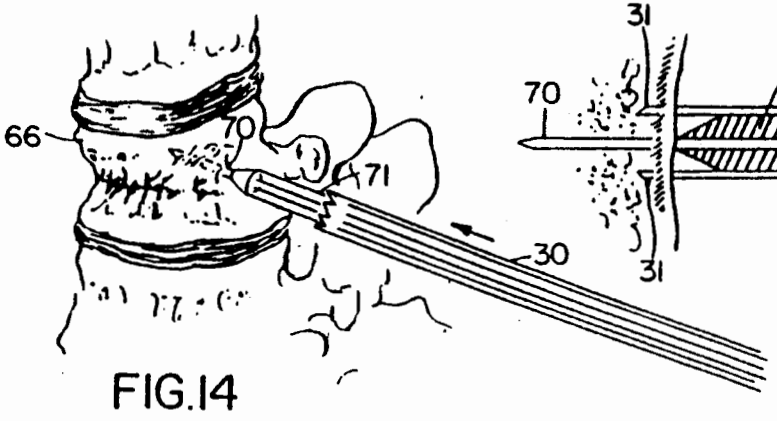

FIG.14

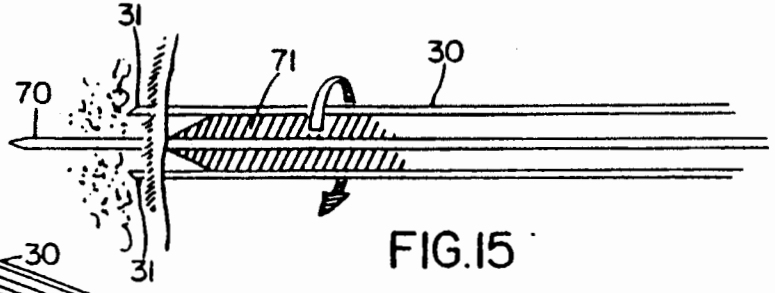

FIG.15

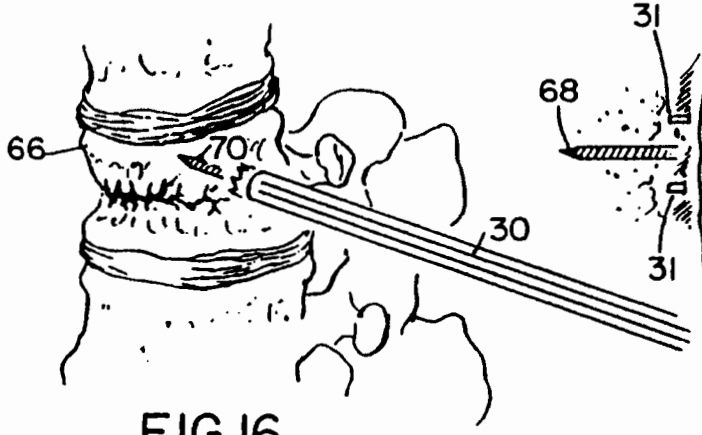

FIG.16

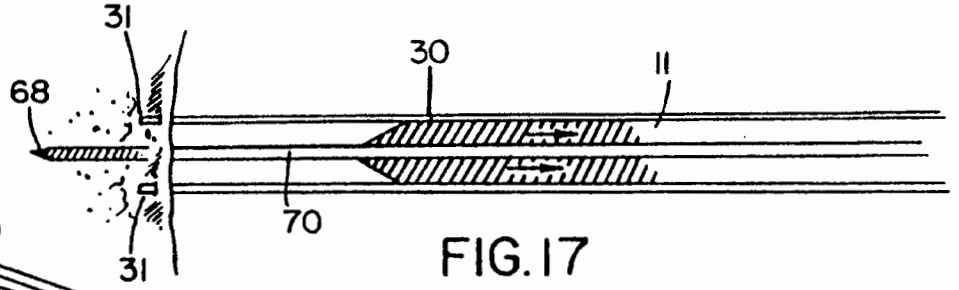

FIG.17

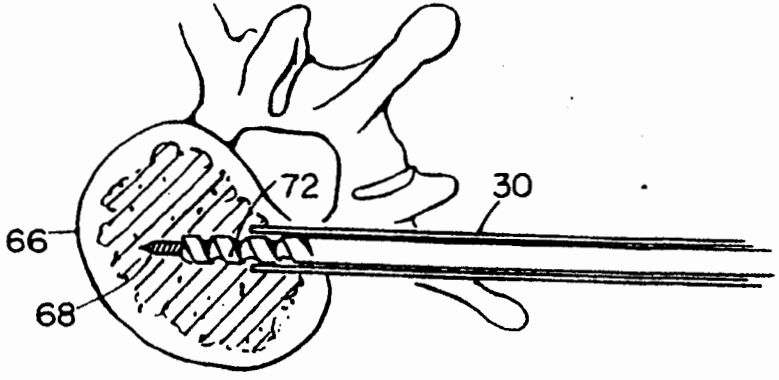

FIG.18

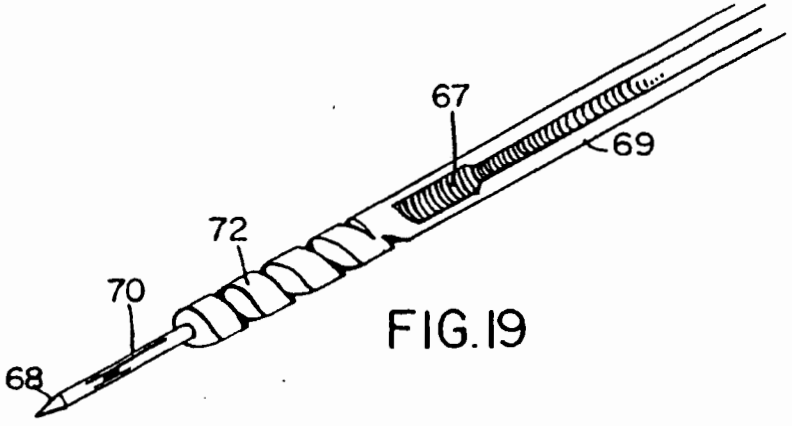

FIG.19

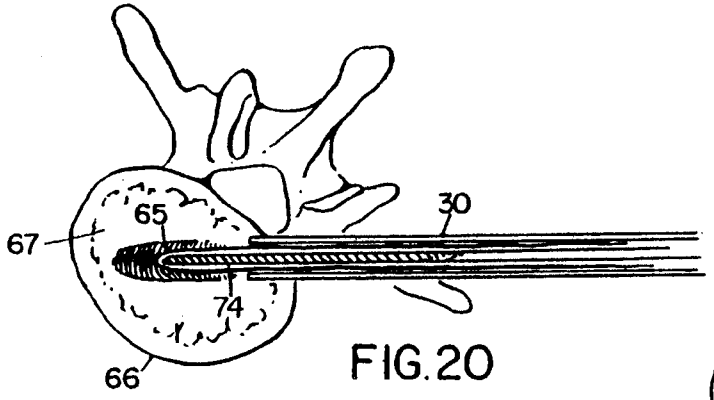

FIG.20

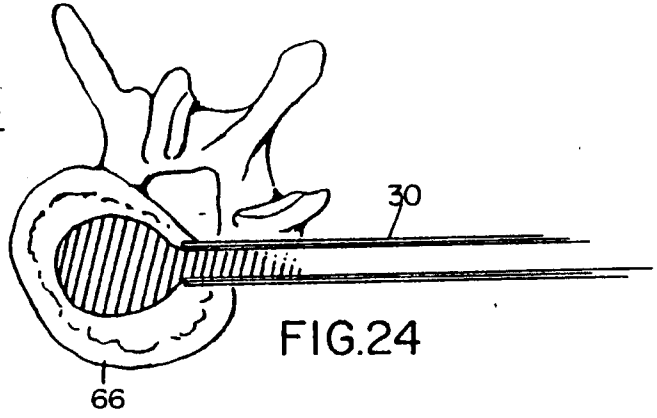

FIG.24

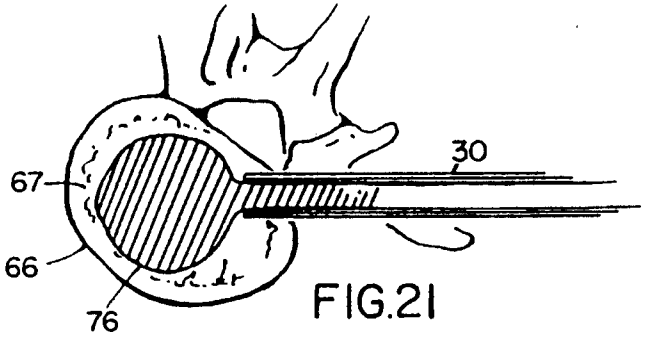

FIG.21

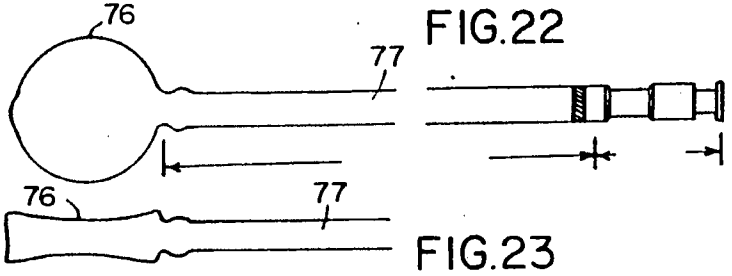

FIG.22

FIG.23

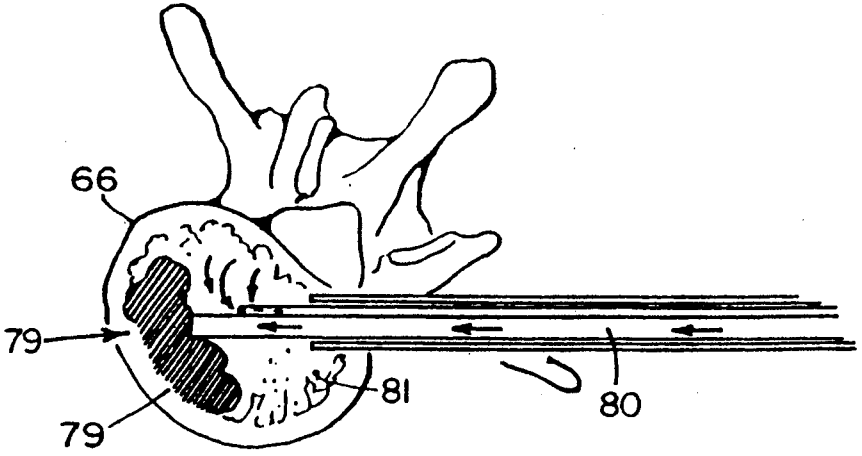

FIG.25

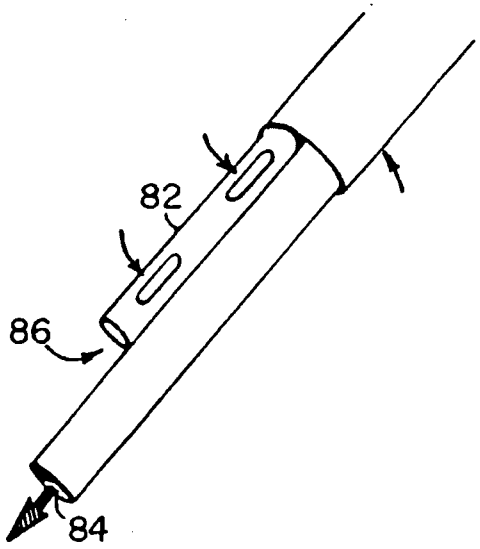

FIG.26

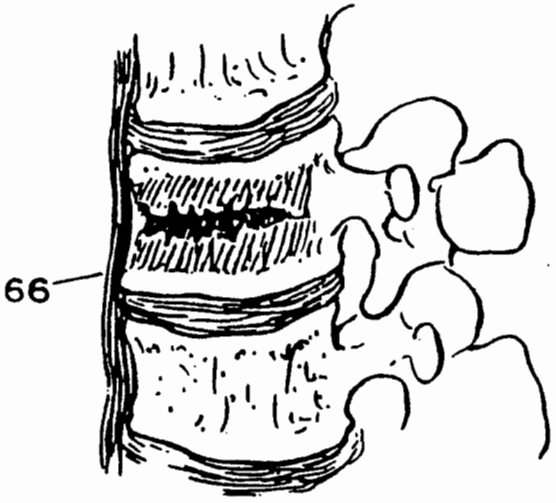

FIG.27

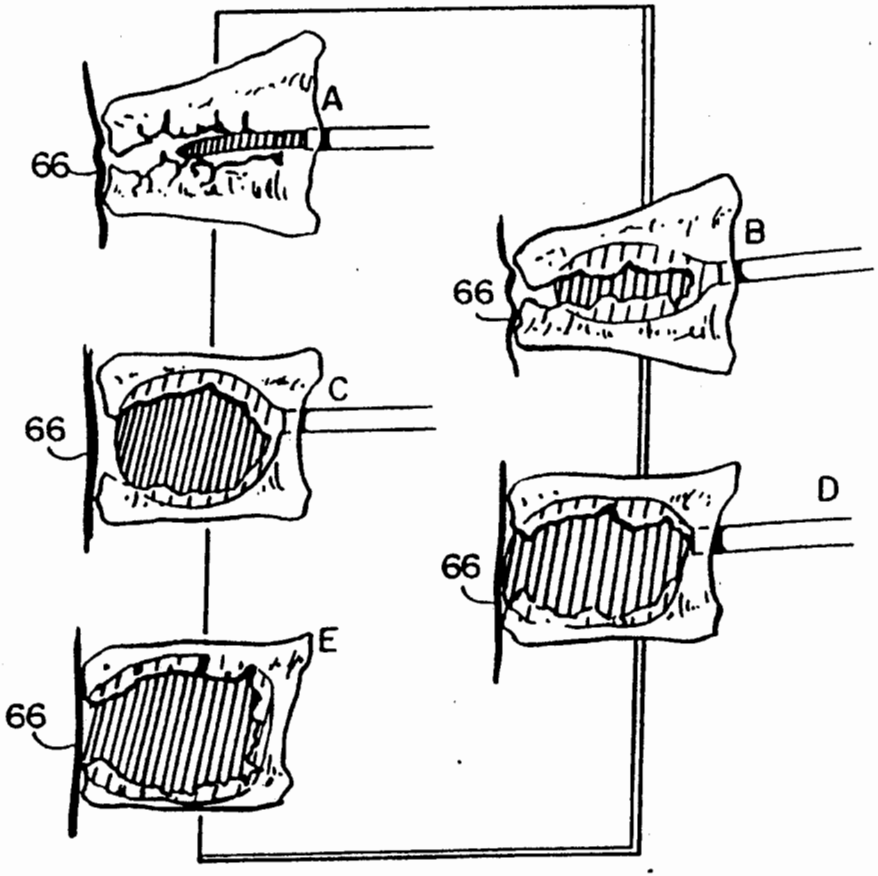

FIG.28

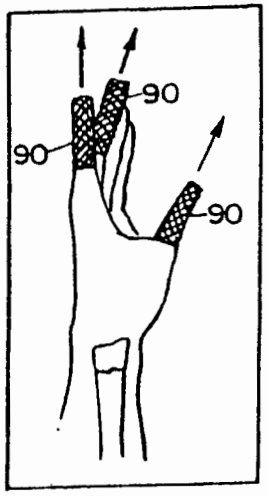

FIG.29

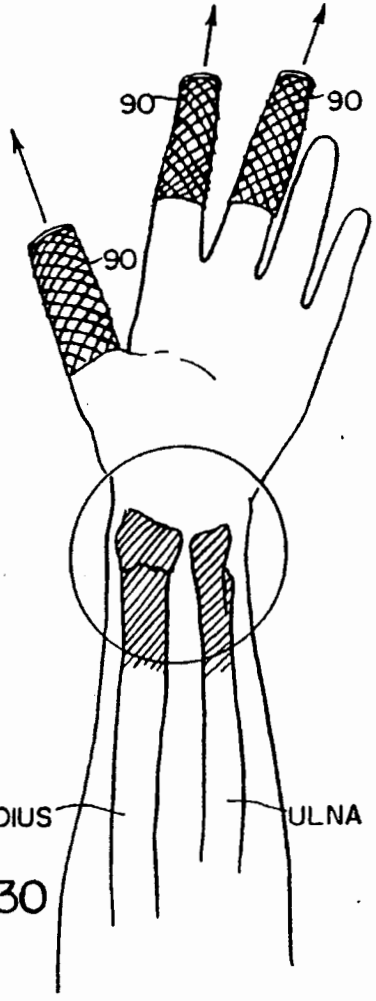

FIG.30

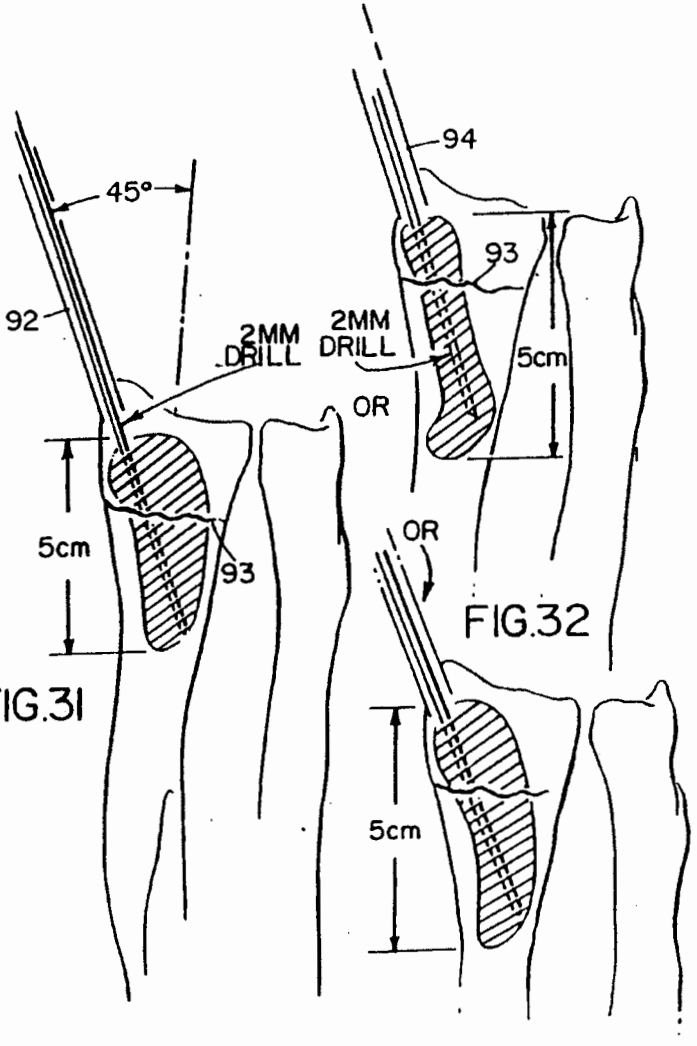

FIG.31

FIG.32

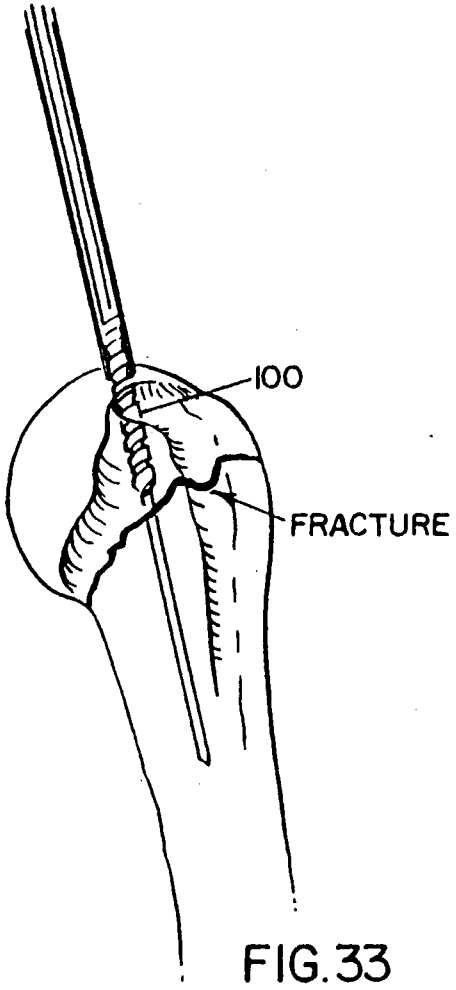

FIG.33

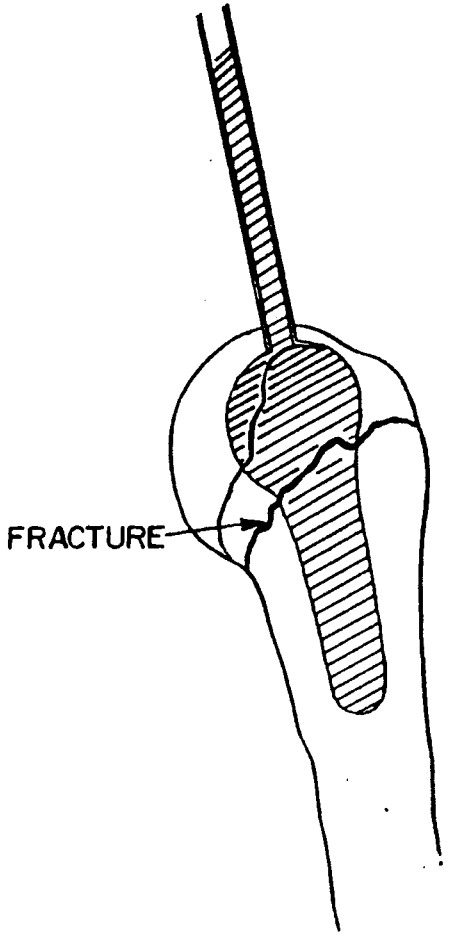

FIG.34

SURGICAL PROTOCOL FOR FIXATION OF BONE USING INFLATABLE DEVICE

This is a continuation-in-part application of application Ser. No. 07/308,724, filed Feb. 9, 1989, entitled "Surgical Protocol for Fixation of Osteoporotic Bone Using Inflatable Device," now U.S. Pat. No. 4,969,888.

This invention relates to improvements in the surgical treatment of bone conditions of the human and other animal body systems and, more particularly, to a method and apparatus for use in correcting such conditions.

BACKGROUND OF THE INVENTION

Every year in the United States there occurs over 1.2 million bone fractures of osteoporotic bone. Over nine hundred thousand (900,000) of those fractures occur in bones which can be treated with the percutaneous balloon technology of the present invention which includes instant fixation by methyl methacrylate cement or with liquid artificial bone substitutes. Those fractures which can be treated by the method and apparatus of the present invention are distal radius fractures, the proximal humerus fractures, the vertebral body compression fractures, and fractures of other long bones.

Osteoporotic and non-osteoporotic vertebral body compression fractures are currently treated with bed rest, analgesics, and intravenous hydration during the first week after onset of the problem. These steps are followed by the prescription of a soft or firm spinal corset, depending upon the physician's preference. In most cases, the corset is not worn because the patient suffers much discomfort and oftentimes greater discomfort than that due to the fracture of the vertebral body. The fracture pain lasts from two to eight months. In many cases, patients with vertebral body collapse fractures require about one week in an acute care hospital and two to three weeks in an extended care facility until they are able to move about independently and with only moderate pain. Current treatment does not substantially alter the conditions of the vertebral body.

The current management of shoulder fractures includes either long term immobilization in a sling, followed by lengthy physical therapy. If the fracture is in three or four parts, the fracture is treated with a shoulder hemiarthroplasty. Long term stiffness is the rule, following either treatment due to long term immobilization and/or extensive wound healing.

Colles' fractures of the wrist in the elderly are currently treated in three different ways: 1) they are treated with closed reduction and application of a short arm cast for one or more weeks; 2) they can be treated with a short arm cast without reduction; and 3) they may be treated with closed reduction and pins and plaster immobilization for eight weeks. All treatment modalities result in considerable stiffness and have frequent malunions of the fractures.

Because of the problems associated with the treatment of vertebral body fractures, Colles' fractures, shoulder fractures and other bone conditions similar thereto, a need has existed for a method and apparatus to improve on the protocol for treating such fractures such as shortening the time in which a patient suffers pain due to such fracture. The present invention provides apparatus and a method of percutaneous fracture fixation which satisfies this need.

SUMMARY OF THE INVENTION

This invention relates to a method and apparatus for the fixation of fractures of osteoporotic and non-osteoporotic bones. The invention is especially suitable for use in the fixation of osteoporotic vertebral body compression fractures, Colles' fractures and fractures of the proximal humerus. The method of the present invention includes a series of steps including forming an incision in the body and penetrating the bone having the fracture with instruments including a guide pin and a cannula, drilling the bone marrow of the bone to enlarge the cavity or passage to be treated, following which an inflatable device, such as an expandable balloon, is inserted in the cavity and inflated. The expansion of the balloon causes a compacting of the bone marrow against the inner surface of the outer cortical wall of the bone to be treated to further enlarge the cavity. Then, a flowable synthetic bone material or methyl methacrylate cement is directed into the cavity and allowed to set to a hardened condition. Following this, the instruments are removed and the incision in the skin is covered with a bandage.

In the fixation of vertebral body fractures, an elliptical inflatable device is first used, if needed, to initiate the compacting of the bone marrow and to commence the formation of a cavity or passage in the bone marrow, following which a larger inflatable device is inserted into the cavity to further compact the bone marrow in all directions. In the fixation of Colles' fractures and proximal humerus fractures, a gourd-shaped inflatable device is used to compact the bone marrow.

It is the intention of the present invention to provide, in each case of a fracture of osteoporotic or non-osteoporotic bone, an inflatable device that has a shape of or the ability to conform to the internal surface configuration of the cortical bone in which the device is used. Thus, the inner surface configuration of the cortical bone of a vertebral body is disk-shaped or checker-shaped, the cortical bone of distal radius is gourd-shaped and the cortical bone of the proximal humerus is also gourd-shaped.

BRIEF DESCRIPTION OF THE DRAWINGS

FIG. **1** is a perspective view of a patient about to undergo the surgical treatment of vertebral body fixation in accordance with the method of the present invention, the patient lying prone on a U-shaped holder;

FIG. **2** is a front elevational view of the patient on the holder;

FIG. **3** is a side elevational view of the patient, showing hyperextension of the spine of the patient;

FIG. **4** is a perspective view of the rear portion of the patient showing the patient lying between the sides of the holder;

FIG. **5** is a stabilizer bracket for a guide pin and a cannula forming parts of the apparatus for carrying out the method of the present invention;

FIG. **6** is a perspective view of the patient holder shown in FIGS. **1**, **2** and **4**;

FIG. **7** is another perspective view of the holder of FIG. **6** looking upwardly from the bottom thereof;

FIG. **8** is a top plan view of the portion of the patient showing several vertebral bodies of the patient and the way in which the a guide pin enters a patient for carrying out the method of the present invention;

FIG. **9** is a schematic front elevational view of the patient and a vertebral body of the patient showing the

entry angles of the guide pin of the apparatus of the present invention;

FIG. 10 is a side elevational view of the vertebrae, showing a guide pin inserted into one of the vertebral bodies;

FIG. 11 is a top plan view of the guide pin inserted into the vertebral body;

FIG. 12 is a perspective view of the guide pin placed within the vertebral body and a tissue expander sliding on the guide pin to the vertebral body;

FIG. 13 is a side elevational view of the tissue expander over the guide pin;

FIG. 14 is a view similar to FIG. 12 but showing a cannula carried by the tissue expander toward the vertebral body;

FIG. 15 is a view similar to FIG. 13 but showing teeth of the cannula embedded in the outer wall of the vertebral body;

FIG. 16 is a view similar to FIG. 14 but showing another view of the cannula embedded in the cortical wall of the vertebral body;

FIG. 17 is a view similar to FIG. 15 but showing the withdrawal of the tissue expander through the cannula;

FIG. 18 is a view similar to FIG. 11 but showing a drill guided into the vertebral body by the guide pin through the cannula;

FIG. 19 is an enlarged perspective view of the drill of FIG. 18;

FIG. 20 is a view similar to FIG. 18 but showing an elliptical inflatable device inserted into the vertebral body to expand the bone marrow in the vertebral body;

FIG. 21 is a checker-shaped inflatable device in the vertebral body to complete the expansion of the bone marrow in the vertebral body;

FIG. 22 is a top plan view of the checker-shaped inflatable device of FIG. 21;

FIG. 23 is a side elevational view of the checker-shaped inflatable device of FIG. 22;

FIG. 24 is a view similar to FIGS. 20 and 21 but showing the insertion of the inflatable device of FIG. 22 into a vertebral body;

FIG. 25 is a view similar to FIG. 24 but showing the insertion of a liquid artificial bone or methyl methacrylate cement into the vertebral body to replace the bone marrow;

FIG. 26 is an enlarged, fragmentary perspective view for directing liquid bone or methyl methacrylate cement into the vertebral body;

FIG. 27 is a side elevational view of the vertebral body after the liquid bone has been injected into the interior thereof;

FIG. 28A is a schematic side view of a vertebral body showing the initial insertion of an elliptical inflatable device in the vertebral body and before inflation of the device;

FIG. 28B is a view similar to FIG. 28A but showing partial inflation of the inflatable device of FIG. 28A to initiate a cavity or passage in the bone marrow of the vertebral body;

FIG. 28C is a view similar to FIG. 28B but showing a checker-shaped inflatable device in the vertebral body to further compact the bone marrow in the vertebral body;

FIG. 28D is a view similar to FIG. 28C but showing the initial injection stage in which liquid bone or methyl methacrylate cement is injected into the vertebral body;

FIG. 28E is a view similar to FIG. 28D but showing the vertebral body after the liquid bone or methyl methacrylate cement has set to a hardened condition;

FIG. 29 is a schematic top plan view of a distal radius fracture of the wrist, the fracture at the end of the radius being aligned with Chinese finger traps;

FIG. 30 is a view similar to FIG. 29 but looking in a different direction at the hand but illustrating the fracture;

FIG. 31 is a view of the fracture with the guide pin being inserted through the interface of the fracture;

FIG. 32 is a view similar to FIG. 31 but showing a drill in the radius, and the area to be filled with liquid bone or methyl methacrylate cement;

FIG. 33 is a side elevational view of a shoulder showing a fracture therein; and

FIG. 34 is a view similar to FIG. 33 but showing the bone fracture and cavity to be filled with liquid bone or methyl methacrylate cement.

DETAILED DESCRIPTION OF THE DRAWINGS

Percutaneous vertebral body fixation is indicated for all causes of spontaneous osteoporotic or non-osteoporotic vertebral body collapse fractures except those due to infection or neoplasia. The etiology of the bone marrow should be diagnosed prior to fixation. Concomitant endocrine therapy, chemotherapy or radiation is not contraindicated with percutaneous vertebral fracture fixation.

Impending vertebral body collapse as determined by the presence of previous collapse fractures and increased uptake on technetium-99 bone scan in a non-collapsed vertebral body. Various CT density values may eventually correlate with impending vertebral body collapse and be utilized to predict impending vertebral body fractures.

Contradictions of such fixation are as follows:

Presence of pyogenic infection;

Presence of tuberculous infection;

Presence of neoplasia;

Presence of sepsis;

High velocity spinal fractures;

Fractures above the level of T-6; and

Fractures which demonstrated widened pedicles on AP spine x-rays.

To illustrate the teachings of the present invention, the following specification will be described with respect to treatment of fractures relating to osteoporotic bone, but it is to be understood that the invention applies also to treatment of fractures relating to non-osteoporotic bone.

In carrying out the teachings of the method of the present invention as to osteoporotic vertebral fixation, a patient 10 is placed on a generally U-shaped holder 12 so that the patient lies above the central part 14 of holder 12 and between a pair of spaced sides 16 and 18 as shown in FIGS. 1, 2 and 4. Holder 12 can be of any suitable construction, such as metal or plastic and is constructed to render the patient generally immovable when the patient is prone as shown in FIGS. 1-4. The length of sides 16 and 18 is preferably sufficient to achieve the aim of rendering the patient generally immovable.

Typically, the length of sides 16 and 18 is approximately 12 to 15 inches. For the comfort of the patient, a cushion 20 is provided above central part 14 as shown in FIG. 2. The central part 14 has holes 22 therethrough

(FIGS. 6 and 7) and the holes are for the purpose of receiving circular portions of the cushion 20 formed due to the weight of the patients to anchor the cushion in place and to prevent it from moving relative to holder 12 when the patient's body is on the cushion as shown in FIG. 2. This assures that the cushion will not contribute to the movement of the patient relative to the holder. Pads 24 and 26 are placed at the chest and hip regions of the patient for the comfort of the patient and to extend the spine.

FIG. 5 shows a support bracket 28 adjustably mounted on the sides 16 and 18 of holder 12. The purpose of bracket 28 is to support a cannula 30 and guide pin 70 forming part of the apparatus of the present invention. Cannula 30 will be described hereinafter in more detail.

Bracket 28 includes a pair of clamps 31 and 32 for releasably connecting the bracket to respective sides 16 and 18 of holder 12 by means of thumb screws 34. Bracket 28 further includes a pair of legs 38 and 40 which are made up of connectable extensions as shown in FIG. 5. Legs 38 and 40 are releasably connected to respective clamps 31 and 32 by thumb screws 42 and 44. A rod 46 is connected by thumb screws 48 and 50 to end sleeves 52 and 54 on the upper ends of respective legs 38 and 40. Rod 46 can be rotated in the sleeves 52 and 54 to thereby rotate a clamp 56 coupled to the rod 46 and having a leg 58 on which cannula 30 and guide pin 70 are adjustably mounted. Thus, the cannula can be moved toward or away from legs 38 and 40 and can rotate about the longitudinal axis of rod 46. In this way, the cannula can be adjusted as to the distance from the patient to rod 46 as well adjust the position of the bracket 28 by means of shifting clamps 31 and 32 along the sides of holder 12.

The teachings of the method of the present invention will be hereinafter described with respect to treatment of a person with osteoporotic spine disease. The presence of such disease is evidenced by a plain film spinal x-rays and either CAT-scan evidence of impending fracture or plain film x-ray evidence of vertebral body collapse. In obtaining such evidence, both sagittal and coronal CAT-scans should be obtained before the performance of the method of the present invention. The coronal scan is also needed to determine the width of the vertebral body which is to be treated and also to rule out the presence of posterior displacement of the colon which can interfere with the posterolateral approach which generally occurs in four percent of the patients. If the colon is noted, the approach must be altered to the other side of the body.

The sagittal CAT-scan is needed to determine the height of the vertebral body to be treated. If an acute compression fracture is present, then the appropriate height is determined by the height of the vertebral body located superior to the fracture. If the patient has an acute fracture of a vertebral body, the patient is to be placed prone in the manner shown in FIGS. 1–4.

Attempts to reconstitute the height of the vertebral body should be made by hyperextending the patient's spine as shown in FIG. 3. If the patient has an impending fracture of a vertebral body, then the patient can be positioned either prone as shown in FIGS. 1–4 or on his side depending upon the surgeon's preference. If on the side, the patient is rendered immovable by suitable structure for holding the patient in one position during the time that the method of the present invention is being performed.

The posterolateral approach is used whether the patient is prone (FIGS. 1–4) or in the lateral position. Then the entry point on the skin is determined radiologically and is located approximately 10 cm from the midline and just inferior to a rib if present at that level as shown in FIG. 8.

FIG. 8 shows the entry points of the instruments for carrying out the method of the present invention for two vertebral bodies spaced from each other. The instrument shown in FIG. 8 is a guide pin 70 which enters the patient at an incision 62 (FIG. 8). A choice of angle of entry of the guide pin 70 can be 30° to 45° as shown in FIG. 9. The vertebral body to be injected is located fluoroscopically. The skin, underlying soft tissue and lateral cortex of the vertebral body are injected with a long spinal needle. General anesthesia is not advisable.

The surgical procedure for treating a vertebral body is as follows:

The vertebral body 66 to be treated (FIGS. 10 and 11) is penetrated by the pointed end 68 of quide pin 70 which enters the vertebral body between the inferior and superior end plates of the body 66 and into the posterior quarter of the vertebral body. Pedioles are to be ignored. The quide pin penetrates to a depth in the range of 60 to 80% across vertebral body 66 as shown in FIG. 11. Placement of the pin is fluoroscopically monitored. Any further penetration beyond 70% runs the risk of perforation of the vertebral body and an adjacent major vessel or lung.

With the guide pin penetrating the vertebral body 66 as shown in FIGS. 10 and 11, a soft tissue expander 71, which is a tubular member as shown in FIGS. 12 and 13, is inserted over the guide pin until the end of the expander makes contact with the vertebral body as shown in FIG. 13. Expander 71 then forms a guide for cannula 30 to guide the cannula toward the vertebral body to be treated.

When the cannula makes contact with the wall of the vertebral body, the cannula is rotated clockwise under pressure to force the teeth 31 of the cannula into the wall of the vertebral body 66 as shown in FIG. 15. This locks the cannula into the wall as shown in FIG. 16 so that the cannula can be coupled to bracket 28 (FIG. 5) for stabilization thereby. Then, the expander 71 can be removed from the interior of cannula 30 as shown in FIG. 17.

Once the cannula is stabilized, a drill stop is formed to prevent penetration of the far cortex of the vertebral body by drill 72 (FIGS. 18 and 19). The drill stop is formed by a shoulder 67 on pin 70 (FIG. 19) which is engageable with shoulder 69 on drill 72 and holding pin 70 with bracket 28.

Vertebral body 66 is drilled by a 4 mm drill 72. The drilling depth is monitored by fluoroscopy to the end of the guide 10. The drill is tubular and is guided by the guide pin 70 as shown in FIG. 19.

The next step to be performed in carrying out the method of the present invention is to withdraw the pointed guide pin 70 and replace it with a deflated elliptical or chambered bladder device 65. The elliptical balloon 65 is monitored fluoroscopically. This is achieved by inflating the elliptical balloon 65 to a pressure in the range of 50 to 300 psi with a radio-opaque contrast medium by an injector as shown in FIG. 24. The purpose of the elliptical balloon 65 is to center a second, checker-shaped inflatable device or balloon 76 (FIGS. 21–23) in the interior of vertebral body 66. After the elliptical balloon 65 is deflated and removed, check-

er-shaped or cylindrically shaped device or balloon **76** is inserted into the cannula and directed into the interior of vertebral body **66** as shown in FIG. **21**.

The diameter of balloon **76** is determined by the pre-operative CAT-scan results. The diameter is in the range of 1.0 cm to 3.5 cm. The axial height of the balloon (FIG. **23**) is determined by the intra-operative reduction height of the vertebral body fracture. The height is in the range of 0.5 cm to 4.0 cm. If the balloon placement is somewhat eccentric, a smaller balloon may be needed. The balloon **76** has a neck **77**, and the outer configuration of the balloon **76** is substantially the same as that of the inner surface of the cortical wall of the vertebral body **66**.

The progress of balloon inflation is monitored fluoroscopically to ensure proper insertion of the balloon **76**. The balloon is injected, gradually, with contrast as in the case of the elliptical balloon to a maximum height. This may require pressure as great as 300 psi to accomplish. The balloon's inflation should be monitored on the lateral fluoroscopic view of the spine. Posterior displacement of the bone into the spinal canal or full expansion of balloon **76** signals the termination of the chamber preparation. Further expansion of the balloon at this point could result in spinal cord or root injury.

As balloon **76** is inflated, it forces the osteoporotic bone marrow **67** laterally and outwardly of the wall of the vertebral body **66**. This compacts the bone marrow and leaves a void in the interior of the vertebral body to be treated. The compacted bone marrow forms a dam to block any fracture of the vertebral body. Thus, when liquid synthetic bone or methyl methacrylate cement is forced into the void, the compacted bone marrow will substantially prevent flow through the fracture.

After the balloon **76** has been deflated it is removed from the cannula **30**. An irrigation nozzle (not shown) is then inserted into the vertebral body **66**. Irrigation is performed with normal saline solution. Irrigation should be performed until the effluent is reasonably clear.

After the vertebral body has been irrigated, the artificial bone substitute, which may include a synthetic bone or methyl methacrylate cement, is injected into the void left by the inflation of balloon **76**. A double barrel injection gun nozzle aspirates constantly through the short barrel. Such injection gun nozzle is shown in FIGS. **25** and **26** and includes a material delivery tube **80** and an aspirating tube **82**, both of which have open ends **84** and **86**, respectively. Injection of synthetic bone material is monitored using lateral fluoroscopy. Leakage posteriorly into the canal of tube **82** requires an abrupt stopping of the injection. Leakage anteriorly is exceedingly rare since the anterior longitudinal ligament is intact with these fractures.

The volume of injection ranges between 3 and 5 cc's. A larger volume is injected than one would predict from the size of the chamber formed with balloon **76** even in those patients injected prophylactically.

The injection gun nozzle shown in FIG. **26** is slowly removed as the vertebral body is injected with artificial bone or cement. At the entry hole into the vertebral body the tip of the injection nozzle is twisted as the cement sets up. At that time, the injection gun nozzle should be removed. FIGS. **28A** and **28B** show the sequence of the expansion of elliptical balloon **65**. FIGS. **28C** and **28D** show checker-shaped balloon **76** in the vertebral body **66**. FIG. **28E** shows the vertebral body after the mass **81** of artificial bone or methyl methacrylate cement has set to a hardened condition.

After the proper volume of artificial bone or cement has been inserted into the void of the vertebral body, cannula **30** is removed and the skin is dressed with a bandage.

Surgical protocol for Colles' fractures are described as follows with reference to FIGS. **29–32**.

The current treatment for distal radius fractures of the wrist in osteoporotic patients includes: (1) closed reduction and application of a short arm cast with the wrist in a flexed position for six weeks; (2) application of a short arm cast without reduction of the fracture; and (3) closed reductions of the fracture with Chinese finger traps and application of pins and plaster. All three techniques require cast immobilization for 6 to 8 weeks and result in considerable stiffness for many months. In the case of the second treatment described, the wrist is also malpositioned.

The treatment of the present invention involves the reduction of the fracture with Chinese finger traps and the subsequent use of a balloon to create a chamber followed by the injection of either methyl methacrylate cement or a flowable bone substitute into the chamber to fix the fracture. Immobilization would only be a removable splint for two to four weeks. The wrist would be exercised daily to prevent the subsequent stiffness which usually follows wrist fracture.

The steps involved in this procedure are the same as those listed for the percutaneous fixation of vertebral body fractures. The Colles' fracture is positioned this time using finger traps **90** as shown in FIGS. **29** and **30**. Local anesthesia is injected. The hand and forearm are prepped in the usually sterile fashion. A smooth guide pin **92** (FIG. **31**) is inserted from the tip of the styloid at a 45° angle across the fracture **93**. This is followed by a soft tissue expander and then a 2 mm cannula **91**. A 2 mm drill **94** (FIG. **32**) is then used to drill a canal or passage across the fracture using fluoroscopic control. The drill and guide pin are removed and a gourd-shaped distal radius balloon **95** is introduced into the fracture region through the cannula. The balloon **95** has a configuration substantially the same as that of the inner surface of the cortical bone. The deflated diameter of a globe-shaped part **95***a* of balloon **95** is in the range of 7 to 10 mm, the overall length L is in the range of 4 to 7 cm, and cylindrical part **95***b* has a length in the range of 5 to 8 mm.

The balloon **95** is expanded with contrast liquid using x-ray control. Expansion of the balloon **95** causes compacting of the osteoporotic bone marrow against the inner surface of the cortical wall. The balloon is then deflated and the cavity is then injected with a mass **97** of either methyl methacrylate cement or liquid bone substitute. A splint is used for two to four weeks.

Surgical protocol for the percutaneous fixation of proximal humerus fractures is as follows, with reference to FIGS. **33** and **34**:

Percutaneous intra-osseous balloon fixation is indicated for all one-part shoulder fractures (i.e. non-displaced shoulder fractures), all two-part shoulder fractures except greater tuberosity fractures, and all three-part fractures that do not include a prominent elevation of the greater tuberosity or could be better treated with a hemiarthroplasty. It is not now indicated for four-part fractures.

The fracture is reduced with the patient sitting upright. The fracture is injected with local anesthesia as is

the area just posterior to the greater tuberosity where a guide pin will be introduced. The fracture is reduced with traction and held by an assistant. A guide pin is introduced through the head of the humerus just posteriorly to the greater tuberosity and followed fluoroscopically across the fracture to approximately 8 cm below the fracture. The soft tissue expander is introduced followed by the 3 mm cannula. A canal is drilled over the guide pin with a 3 mm drill **100** and the drill and guide pin are removed.

A gourd-shaped proximal humerus inflatable device or balloon is introduced into the cavity and inflated using contrast and fluoroscopic control. The balloon is then removed and then the cavity is injected with a mass **101** of either methyl methacrylate cement or a liquid artificial bone substitute as shown in FIG. **34**. The fracture is held until the injected substance hardens. The entry site on the top of the shoulder is dressed with a steri-strip and the patient is given a sling for 2 to 4 weeks. During those weeks, the patient should remove the sling several hours a day but perform no heavy lifting.

The gourd-shaped proximal humerus balloon has a configuration substantially the same as that of balloon **95** (FIGS. **31** and **32**). The diameter of the globe-shaped part of the proximal humerus balloon is in the range of 14 to 20 mm. The diameter of the cylindrical part is in the range of 6 to 8 mm, and its length is in the range of 8 to 14 cm.

We claim:

1. A method of fixation of a fracture or impending fracture of a bone having bone marrow therein comprising:

forming a passage in the bone marrow;

compacting the bone marrow to increase the volume of said passage; and

filling the passage with a flowable material capable of setting to a hardened condition.

2. A method as set forth in claim **1**, wherein said compacting step includes forcing the bone marrow outwardly and against the site of the fracture or impending fracture.

3. A method as set forth in claim **1**, wherein said compacting step includes forcing the bone marrow outwardly of the central portion of the bone.

4. A method as set forth in claim **3**, wherein said forcing step includes directing the bone marrow against an inner surface of the bone within the fracture or impending fracture.

5. A method as set forth in claim **1**, wherein said compacting step includes inflating an inflatable device in said passage to urge the bone marrow therein.

6. A method as set forth in claim **5**, wherein is included the step of inserting the device in the passage before the inflating step.

7. A method as set forth in claim **1**, wherein is included the step of inserting an inflatable device in said passage, said increasing step including inflating the device to force the bone marrow outwardly of said passage.

8. A method as set forth in claim **1**, wherein said forming step includes drilling said bone marrow to form said passage.

9. A method as set forth in claim **8**, wherein said drilling step includes guiding a drill through and into the proximate cortical bone marrow.

10. A method as set forth in claim **8**, wherein said forming step includes drilling the bone marrow to a predetermined depth.

11. A method as set forth in claim **10**, wherein said depth is in the range of approximately 60 to 80% of the maximum oblique dimension of the bone containing the bone marrow.

12. A method as set forth in claim **1**, wherein the fracture is a fracture of a vertebral body of the human spine.

13. A method as set forth in claim **1**, wherein said fracture is a Colles' fracture of the distal radius.

14. A method as set forth in claim **1**, wherein said fracture is a fracture of the proximal humerus.

15. A method as set forth in claim **1**, wherein said flowable material is selected from the group consisting of liquid synthetic bone and methyl methacrylate cement.

16. A method of fixation of a fracture of a bone containing bone marrow therein comprising:

drilling said bone to form a recess therein;

inserting an inflatable device in said recess;

inflating the device in the recess to increase the volume thereof and to force the bone marrow outwardly of the recess to form a void in the bone; and

filling the void in the bone with a flowable material capable of setting to a hardened condition.

17. A method as set forth in claim **16**, wherein said inflating step includes inflating a chambered bladder device having an elliptical configuration.

18. A method as set forth in claim **16**, wherein said inflating step includes inflating a chambered bladder device having generally cylindrical configuration.

19. A method as set forth in claim **16**, wherein is included the step of guiding a drill into the bone.

20. A method as set forth in claim **16**, wherein said inflating step includes inflating the device with a radiopaque material.

21. A method as set forth in claim **16**, wherein said inflating step includes compacting the bone marrow in the bone.

22. A method as set forth in claim **16**, wherein said inflating step includes forcing the bone marrow outwardly of the central portion of the bone.

23. A method as set forth in claim **22**, wherein said inflating step includes compacting the bone marrow against an inner surface of the bone.

24. A method as set forth in claim **16**, wherein said drilling step includes guiding a drill into the bone, and rotating the drill about its longitudinal axis.

25. A method as set forth in claim **24**, wherein said drilling step includes drilling the bone marrow to a predetermined depth.

26. A method as set forth in claim **25**, wherein said depth is in the range of approximately 60 to 80% of the maximum oblique dimension of the bone.

27. A method as set forth in claim **16**, wherein the fracture is a fracture of a vertebral body of the human spine.

28. A method as set forth in claim **16**, wherein said fracture is a Colles' fracture of the distal radius.

29. A method as set forth in claim **16**, wherein said fracture is a fracture of the proximal humerus.

* * * * *

C

The Inflatable Spine

Doctors are realigning broken backs with an injection of a small balloon. BY MATTHEW HERPER

ISADOR (IZZY) LIEBERMAN WAS DUMBFOUNDED when, in 1997, an energetic inventor named Mark Reiley showed him a new procedure for restoring the shape of broken and bent spine bones. "You're going to take a balloon where?" said the Cleveland Clinic orthopedist. "And do what with it?"

Once Lieberman tried the procedure, known as kyphoplasty, he became a convert. Reiley's idea of using a thumb-size balloon as a bellows to prop up compressed vertebrae has become one of the fastest-growing back procedures in the U.S.—33,000 a year.

Some 800,000 spinal fractures afflict Americans each year as a result of osteoporosis or bone cancer. If not treated by braces or surgery, fractures can leave the back painfully hunched, crushing the lungs and digestive system so that breathing and eating become difficult.

Kyphoplasty, says Lieberman, who now directs the Cleveland Clinic's center for minimally invasive surgery, is the only way to restore a fractured spine to its normal shape. In the older surgery, vertebroplasty, a doctor injects cement to solidify brittle bone mass. That alleviates pain but leaves the bone deformed, something Lieberman detests. "The premise of orthopedics is to restore alignment so you can retain function," says Lieberman. "I trained for six years as an orthopedic resident to learn to put bones back where they belong."

Kyphon, the Sunnyvale, Calif. company that Reiley founded in 1994, saw its sales rise 72% to $131 million last year, even though the Food & Drug Administration cleared Kyphon's premixed cement recipe only two months ago, allowing the company to market the full procedure, where before it could not mention cement injection or the name kyphoplasty. Kyphon's market value is up 120% in a year to $940 million, or 34 times last year's net earnings.



A weakened or injured vertebra can fracture and collapse



To restore shape, a surgeon inserts two balloons into the fracture.



The balloons are inflated, lifting the bone mass and creating a cavity.



The balloons are removed one at a time and the cavity is filled with cement, fixing the spine in place.

Reiley was an orthopedic surgeon in Berkeley, Calif. in 1984 when he began working on techniques to restore shape to spines. He figured it would be possible to restore shape to a collapsed bone if he could first hollow out a space inside it before injecting bone cement. He dove into spines of cadavers with tiny jacks, scrapers, expandable rotors, lasers and ultrasound when he happened upon a stack of balloons used to clear small kidney stones. He brought them into the anatomy lab and tried them, first drilling a hole in the bone for the balloon to go in, then inflating it, deflating it and injecting cement into the cavity created. The balloons were a success, strong enough to move bone. In an October 2003 study 29 patients had their painfully hunched backs unbent by 8.8 degrees. Eventually Reiley created even hardier versions. Kyphon began marketing the device in 1999, after being cleared by the FDA. A kyphoplasty kit for a single vertebra costs $3,500, six times more than some vertebroplasty kits, according to Shawn Fitz, an analyst at Stephens Inc. Eeric Truumees, an orthopedist at Detroit's William Beaumont Hospital, says that his hospital gets the same payment from insurers or Medicare of about $5,000 for each procedure.

Critics of the procedure say it's too early to call it a success. "I am certainly not going to say that it doesn't work, because it may be the greatest thing since sliced bread," says Richard Deyo, a professor of medicine at the University of Washington. "I just don't think we know that yet." Jeffrey Goldstein, an assistant professor of orthopedic surgery at New York University's Hospital for Joint Diseases, has been impressed with the results of his kyphoplasties, but he worries about performing the surgery too broadly, especially on elderly patients under general anesthesia. "I think this is an excellent procedure in the proper patient," says Goldstein. "I just wonder how many properly indicated patients there will be after all the dust has settled."

Who's the patient to believe? "Find a doctor who does both procedures," says John Mathis of the Virginia College of Osteopathic Medicine. "Then let him decide which is in your best interest."

"Sure," says Reiley, "but if it's your mother, get the balloon." He and other kyphoplasty proponents say that their procedure is safer than vertebroplasty. Using the balloon to create a space in the bone supposedly allows doctors to inject cement under less pressure, potentially preventing harmful leaks of this toxic substance. Reiley, now a consultant at Kyphon, would like to see studies comparing postoperative lung function after the two procedures to prove his theory that kyphoplasty patients will breathe better. "I think more people would use it anyway," he says. "Because it is safer." F

D

ORTHOPEDICS today®

November 1999 CURRENT NEWS IN MUSCULOSKELETAL HEALTH & DISEASE Volume 19 Number 11

Kyphoplasty employs bone balloon to correct kyphosis due to fractures

Balloon restores bone height lost due to osteoporotic compression fractures before they are stabilized with PMMA

by Patrick McGee
ORTHOPEDICS TODAY staff writer

BERKELEY, Calif. – While vertebroplasty – a method of setting osteoporotic compression fractures through the injection of bone cement – has grown in popularity as a minimally invasive tool for a prevalent medical problem, spine surgeons are now analyzing the efficacy and, in some cases, advantages of kyphoplasty over vertebroplasty.

Like vertebroplasty, this technique uses polymethylmethacrylate (PMMA) bone cement to stabilize such fractures. However, it differs because it uses a balloon to approximate the vertebra's natural shape and height before stabilizing it.

Researchers say that in patients treated to date, kyphoplasty restored, on average, at least 50% of the lost vertebral body height and improved kyphosis by 50%. That is key, because the kyphosis that often accompanies vertebral compression fractures (VCF) has been linked to an increased incidence of death due to pulmonary disease.

While the study has only just begun, early results have been dramatic, said **Steven R. Garfin, MD**, the study's principal investigator.

"I'm being cautious with my words until the study's done. I don't want to sound like an evangelist, but I've never done a technique that is so immediately satisfying and gratifying to the patient and the physician," said Garfin, professor and chair of the department of orthopedics at the University of California, San Diego.

Study will involve 25 centers

The study, which will be conducted at 25 centers across the United States, is set to enroll 200 patients. It will compare kyphoplasty with nonoperative treatments like bed rest, narcotic analgesics and bracing, said **Mark A. Reiley, MD**, the general orthopedic surgeon who developed the technique and the tools used to perform it.

However, if the results continue to be as impressive as they have been early on, the study may be halted after 100 patients, said Reiley, who is on staff at Alta Bates Hospital, located here. To be included in the study, the subjects must be at least 40 years old, the vertebra has to be collapsed at least 20%, and the fracture must be less than eight weeks old, Reiley said.

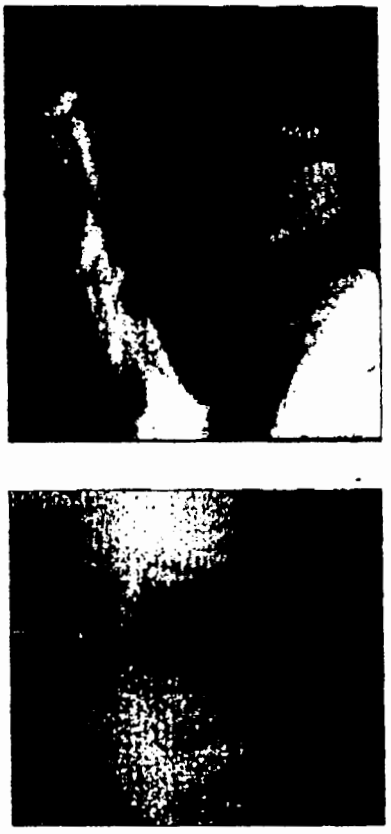

COURTESY OF MARK A. REILEY

The preop radiograph (top) shows a post-collapse view of the anterior cortex at T11 in an 89-year-old osteoporotic woman. The postop view (bottom) shows the anterior height raised to 22 mm. Prior to the kyphoplasty, the anterior height was 13 mm.

Reprinted from ORTHOPEDICS TODAY, *November 1999.*
Copyright ©1999, SLACK Incorporated. *All rights reserved.*

Prior to the outcomes study, 150 fractures were treated in 80 patients, 70% of whom were female. The longest follow-up was 10 months and there were no failures. In addition, 95% of patients experienced pain relief, and there was a 2% complication rate that was not device-related.

In that same group of patients, in six cases where the technique was used to treat kyphosis at T5-L1, patients with an average pretreatment kyphosis of 33° experienced a 17° reduction in kyphosis after treatment.

Reiley said he came up with the idea

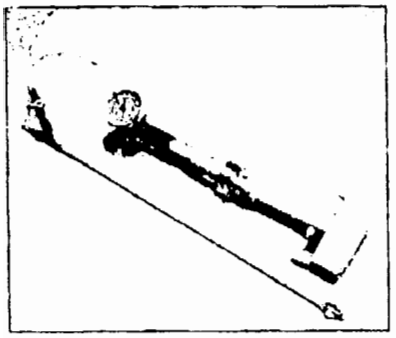

COURTESY OF KYPHON

The KyphX inflatable bone tamp is used in kyphoplasty, which uses bone cement to repair osteoporotic compression fractures and restore vertebral body height.

for the technique in 1985. It grew out of the three years he spent in the bone tumor clinic at the University of California, San Francisco, using bone cements to fill voids left by benign tumors.

"As far as we can tell from our own cases and from the giant-cell literature with 21 years of follow-up, there's no fatigue, there are no fractures, there's no time limit, and the cement that's inside the bone seems to last forever," he said. Reiley and an engineer spent several years developing the technique. Food and Drug Administration approval for the bone tamp was granted via a 510(k) clearance last July.

Inflatable bone tamp

Key to the technique is the Inflatable Bone Tamp system, which is produced by Kyphon Inc. of Santa Clara, Calif., the company Reiley founded with **Karen Talmadge**, PhD, the company's executive vice president. The device is called the KyphX inflatable bone tamp and is used via either a posterolateral or transpedicular approach.

The surgeon percutaneously creates a drill channel into the damaged vertebra that allows for the introduction of the bone tamp through a cannula. The bone tamp is then inflated with radiopaque contrast medium while being visualized fluoroscopically.

After a cavity has been created and the fracture reduced, the tamp is withdrawn to allow for injection of PMMA bone cement under low pressure. Depending on the approach used, the technique can take anywhere from 30 to 60 minutes, said Garfin, who has performed the procedure about 10 times. The last time he did it, the patient arrived in a wheelchair due to back pain and walked out to go home 1½ hours later, he said.

Kyphoplasty is similar to vertebroplasty, which originated in France in the mid-1980s. Since then, published studies involving 300 to 500 cases report "very, very good" results with vertebroplasty, Garfin stated.

Vertebroplasty, which is most often performed by interventional radiologists, uses PMMA bone cement for VCF. However, it differs from kyphoplasty because it does not restore vertebral body height before stabilizing the fractures, Reiley said. If a patient's fractures are treated early enough – preferably six to eight weeks after being sustained – kyphoplasty can restore a good deal of the vertebral body height, he said.

In addition, the PMMA is extremely wet and is injected under high pressure during vertebroplasty. That, Reiley said, can cause the cement to leak out of the vertebral body.

Because a cavity is created in the vertebral body during kyphoplasty, the PMMA can be injected under much lower pressure. In addition, because lower pressure is needed, the PMMA can be cured for about four minutes until it has a doughy consistency. Injecting the cement in that

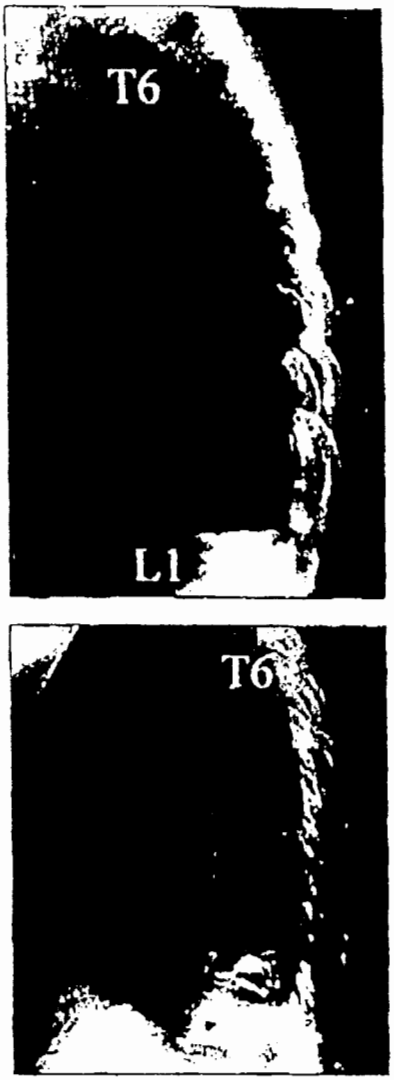

COURTESY OF MARK A. REILEY

A preoperative radiograph shows 38° kyphosis between T6 and L1 caused by a fracture at T12 (top). After the fracture was set using kyphoplasty, the kyphosis was reduced to 18° (bottom).

state makes it unlikely it will leak out of the vertebral body, Reiley said.

Perhaps the key reason orthopedic spine surgeons are drawn to the kyphoplasty technique is that it can be done relatively quickly and yields almost immediate results, Reiley pointed out. "It's a very quick fix and the patients do well, so the surgeons really like doing them," he said. ■

Dr. Garfin has a financial interest in the product discussed in this article.

E

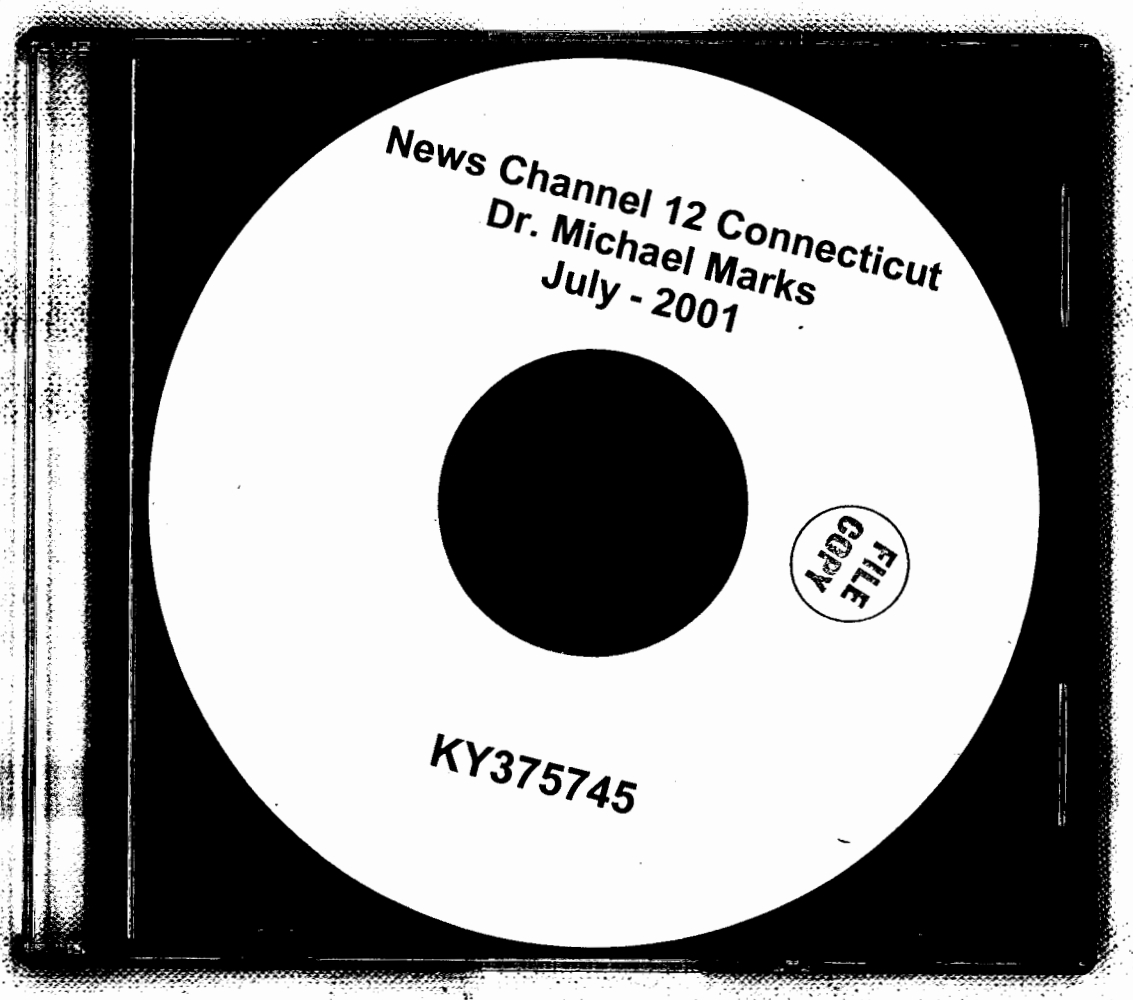
News Channel 12 Connecticut
Dr. Michael Marks
July - 2001
FILE COPY
KY375745

F

United States Patent [19]

Scholten et al.

[11] **Patent Number: 4,969,888**

[45] **Date of Patent: Nov. 13, 1990**

[54] **SURGICAL PROTOCOL FOR FIXATION OF OSTEOPOROTIC BONE USING INFLATABLE DEVICE**

[76] Inventors: **Arie Scholten**, 4175 Tamayo St., Fremont, Calif. 94536; **Mark A. Reiley**, 333 63rd St., Oakland, Calif. 94618

[21] Appl. No.: **308,724**

[22] Filed: **Feb. 9, 1989**

[51] **Int. Cl.**[5] **A61B 17/56**

[52] **U.S. Cl.** **606/94**; 606/60; 606/95

[58] **Field of Search** ..... 128/92 VP, 92 VQ; 606/94, 95, 60

[56] **References Cited**

U.S. PATENT DOCUMENTS

3,091,237	5/1963	Skinner	128/60
3,112,743	12/1963	Cochran et al.	128/92 VP
3,648,294	3/1972	Shahrestani	128/92
3,875,595	4/1975	Froning	128/92
3,889,665	6/1975	Ling et al.	128/92 VP X
4,274,163	6/1981	Malcom et al.	128/92
4,462,394	7/1984	Jacobs	128/92 VP
4,466,435	8/1984	Murray	128/303
4,488,549	12/1984	Lee et al.	128/303
4,562,598	1/1986	Kranz	128/92
4,625,722	12/1986	Murray	128/92
4,627,434	12/1986	Murray	128/92 VP
4,627,434	12/1986	Murray	128/303
4,628,945	12/1986	Johnson, Jr.	128/80
4,714,478	12/1987	Fischer	623/23
4,772,287	9/1988	Ray et al.	623/17

OTHER PUBLICATIONS

Howmedica Exeter Pressurizer 1979, 2 pages.

Journal of B & J Surgery, pp. 1665-1676, vol. 54A #8, 12/1972.

Primary Examiner—Robert A. Hafer

Assistant Examiner—Kevin G. Rooney

Attorney, Agent, or Firm—Townsend and Townsend

[57] **ABSTRACT**

A method and apparatus for the fixation of osteoporotic bones and especially vertebral body compression fractures, Colles' fractures and fractures of the proximal humerus. The method of the present invention includes a series of steps including penetrating the bone having the fracture with a guide pin, drilling the osteoporotic bone marrow of the bone to enlarge the cavity to be treated, following which a bone specific inflatable device is inserted in the cavity and inflated. The expansion of the device causes a compacting of the osteoporotic bone marrow against the inner surface of the outer wall of the bone to be treated to further enlarge the cavity. When this occurs, a flowable synthetic bone material or methyl methacrylate cement is directed into the cavity and allowed to set to a hardened condition. Following this, the instruments are removed. In the fixation of vertebral body fractures, an elliptical inflatable device is first used to initiate the compacting of the osteoporotic bone marrow, following which a checker-shaped inflatable device is inserted into the cavity to further compact the osteoporotic bone marrow in all directions. In the fixation of Colles' fractures and proximal humerus fractures, a gourd-shaped inflatable device is used to compact the osteoporotic bone marrow.

28 Claims, 11 Drawing Sheets

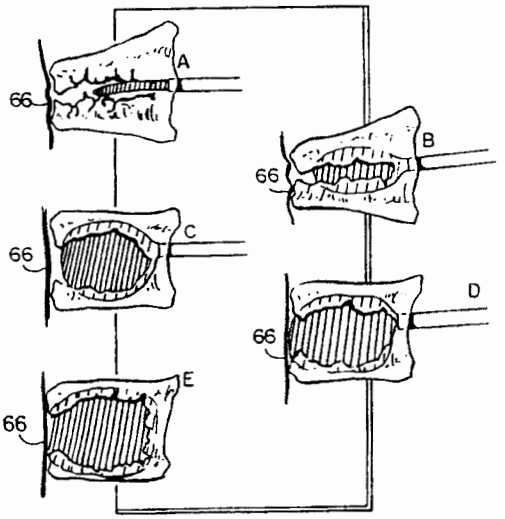

FIG.1

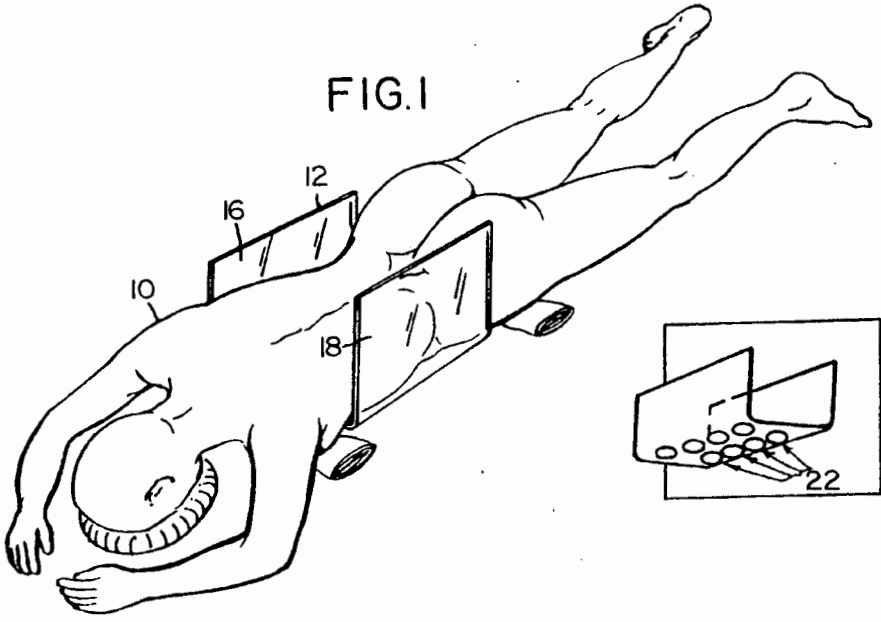

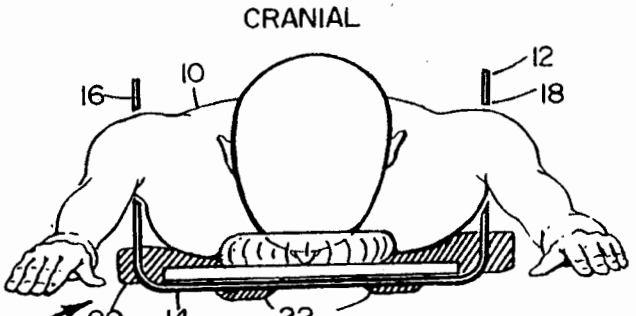

FIG.2

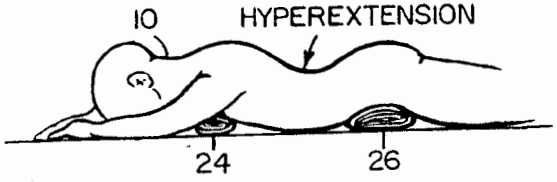

FIG.3

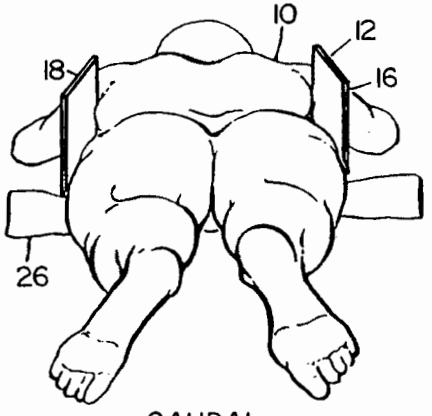

FIG.4

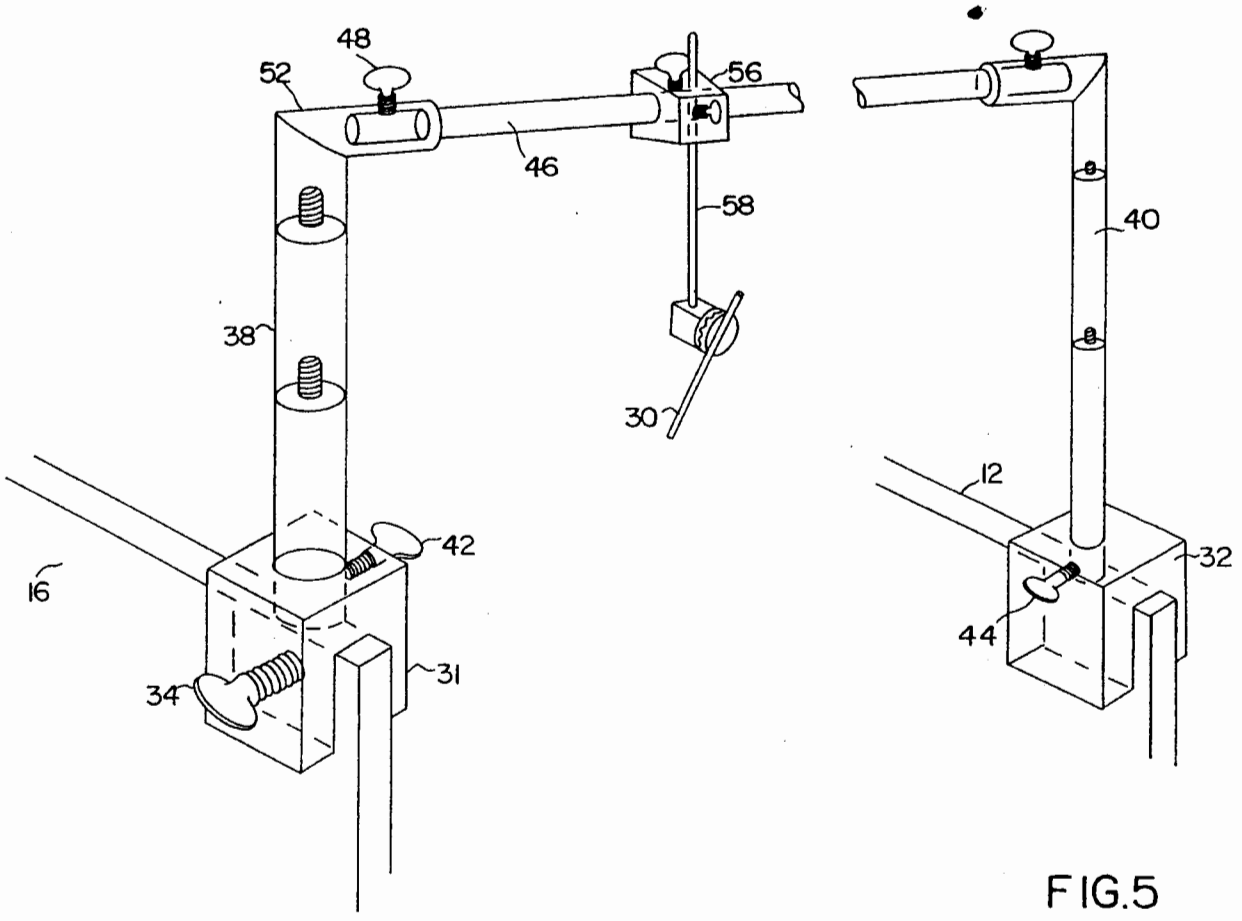

FIG.5

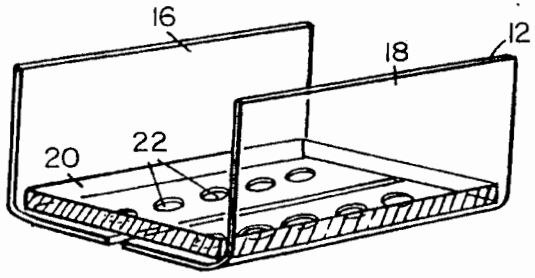

FIG.6

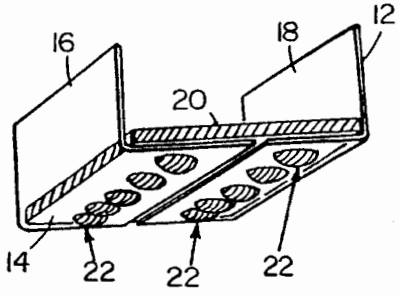

FIG. 7

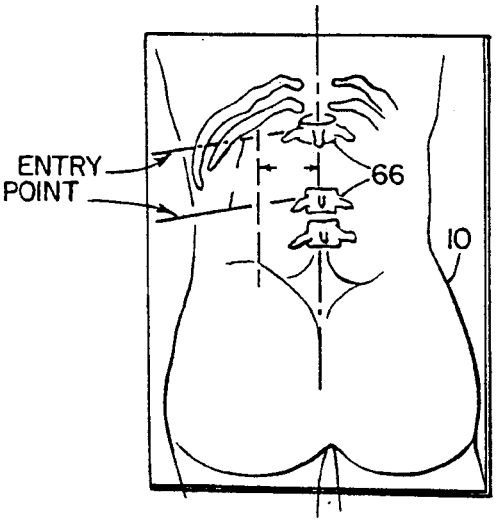

FIG.8

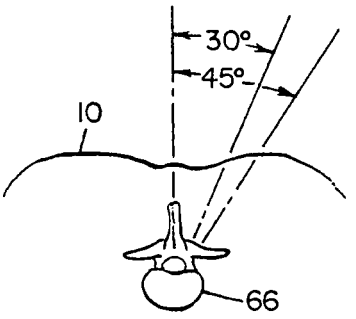

FIG.9

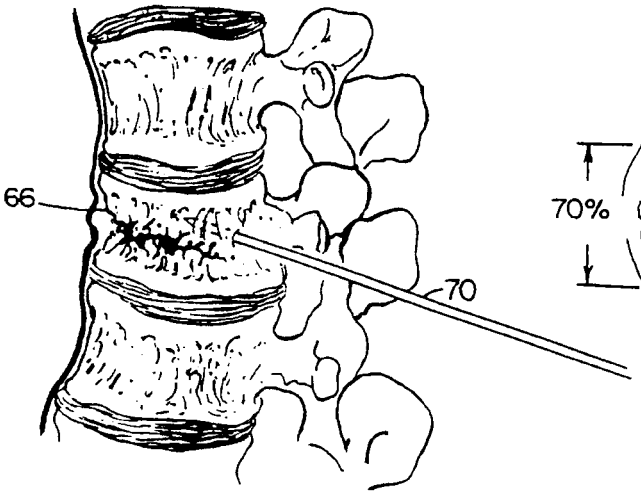

FIG.10

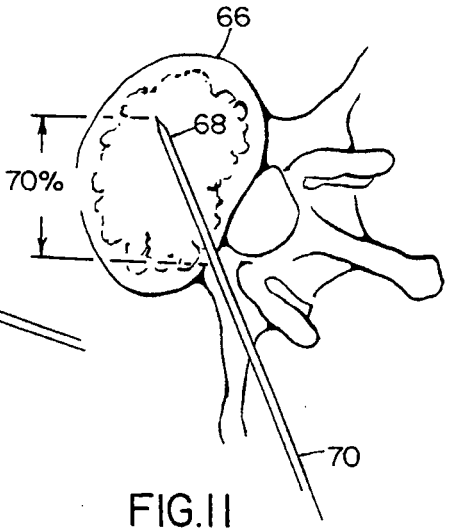

FIG.11

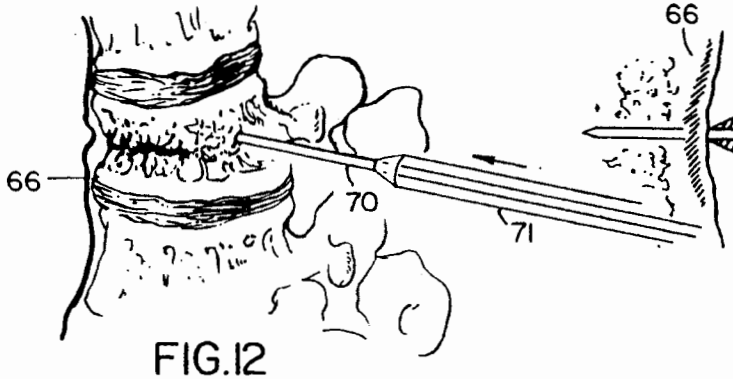

FIG.12

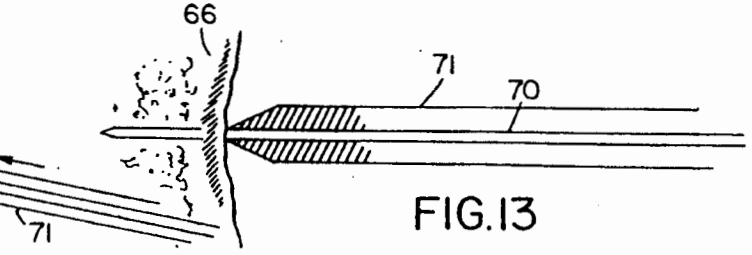

FIG.13

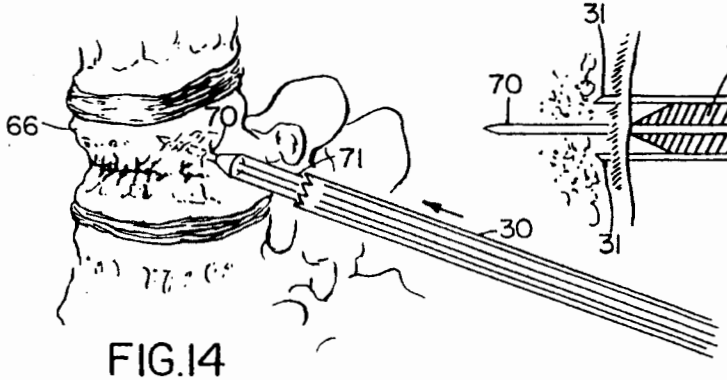

FIG.14

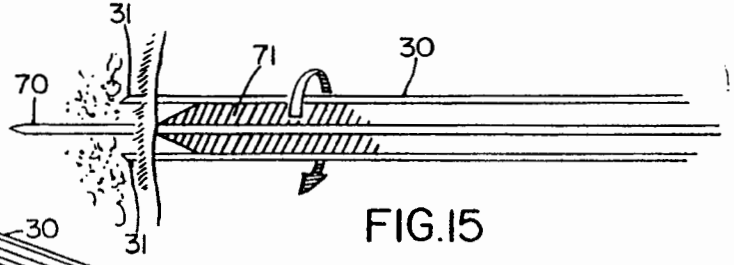

FIG.15

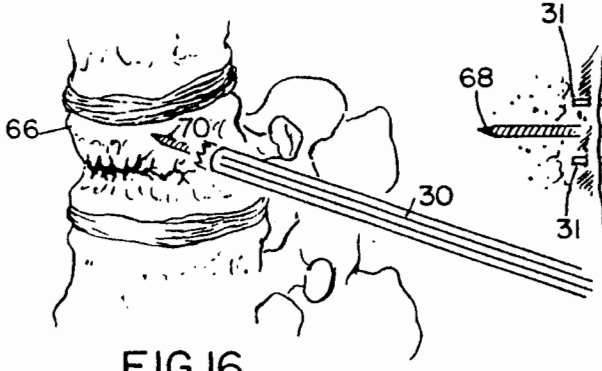

FIG.16

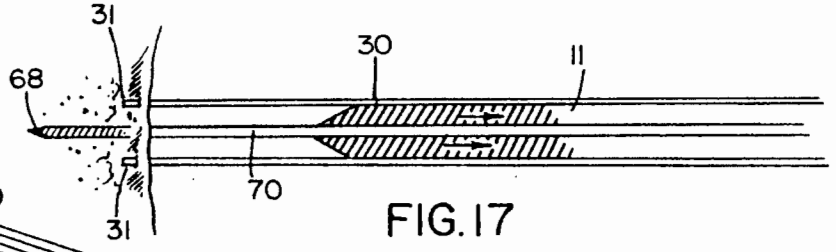

FIG.17

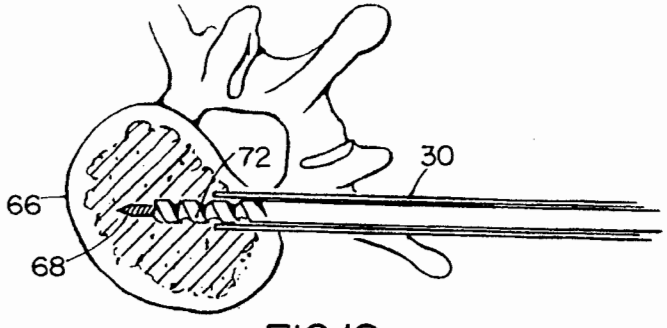

FIG.18

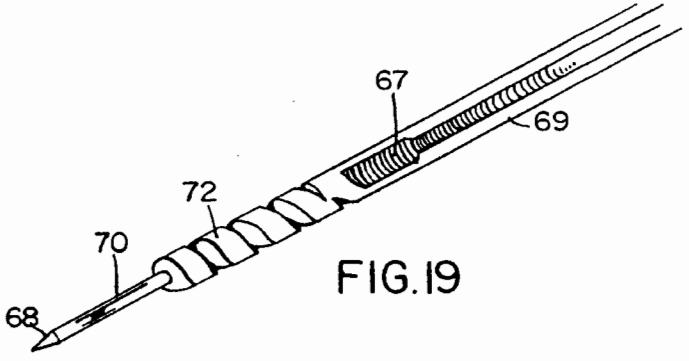

FIG.19

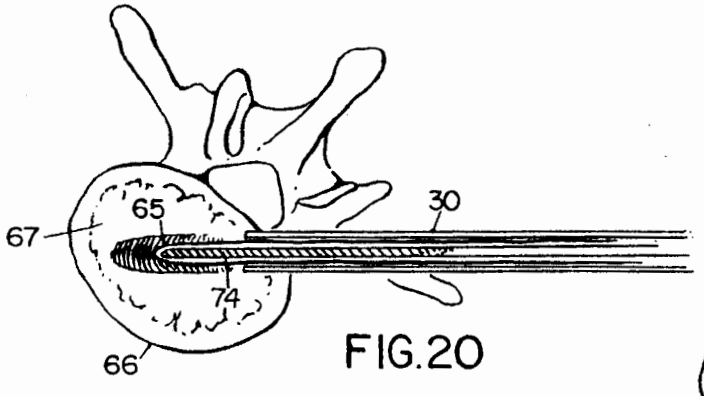

FIG.20

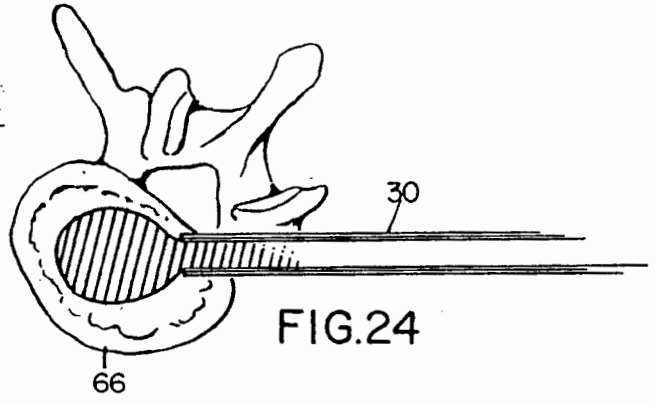

FIG.24

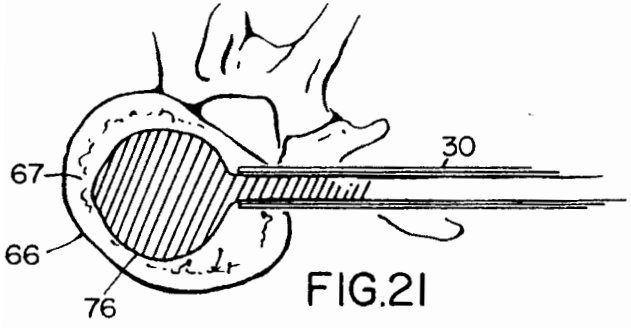

FIG.21

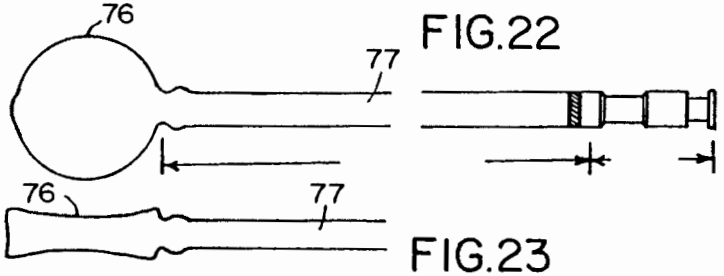

FIG.22

FIG.23

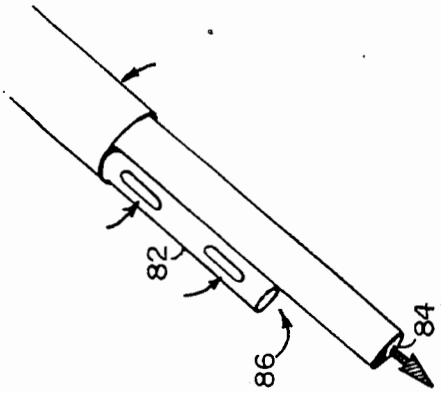

FIG.26

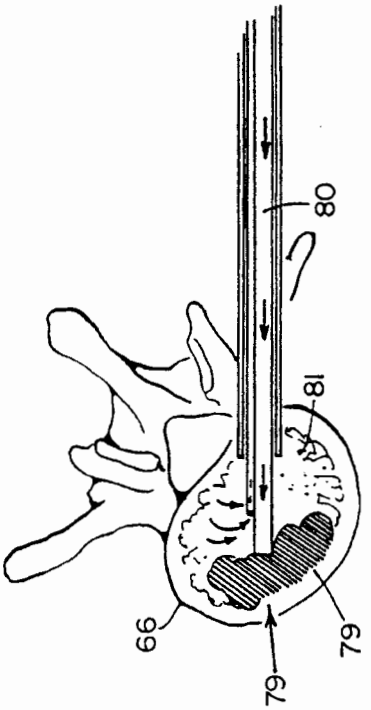

FIG.25

Case 1:04-cv-00204-JJF Document 168 Filed 04/14/2005 Page 42 of 108

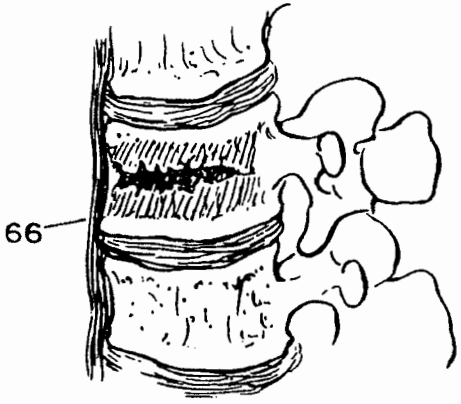

FIG.27

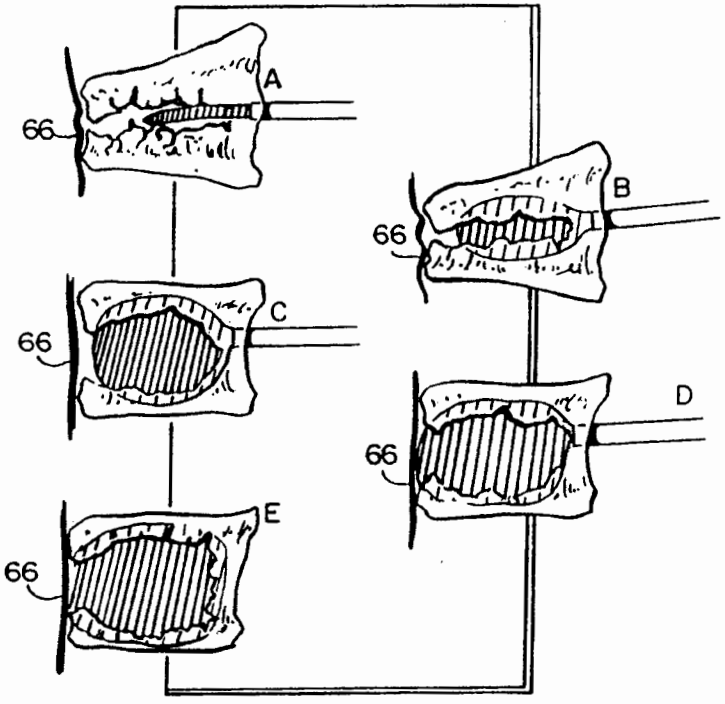

FIG.28

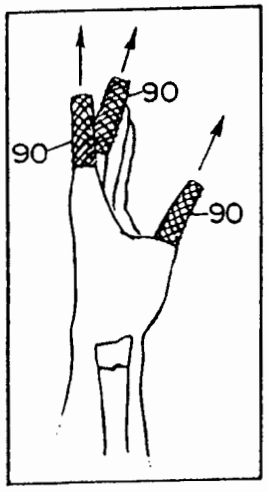

FIG.29

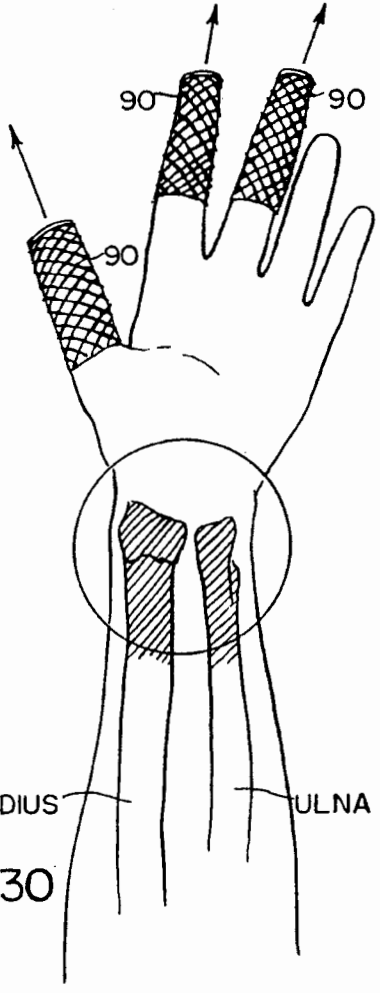

FIG.30

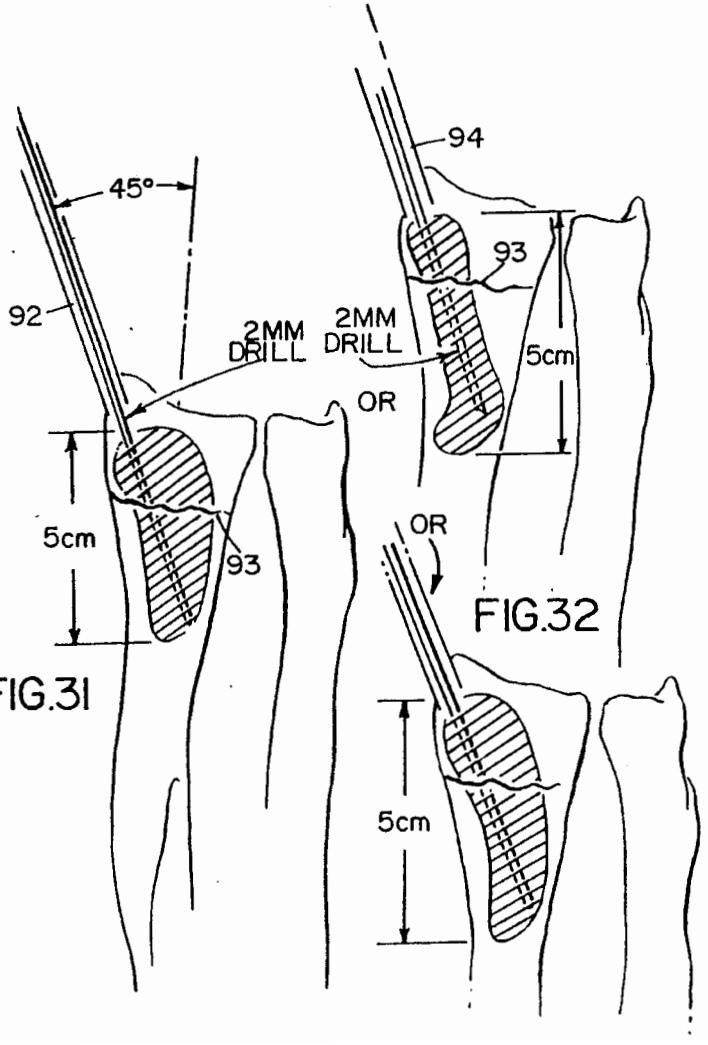

FIG.31

FIG.32

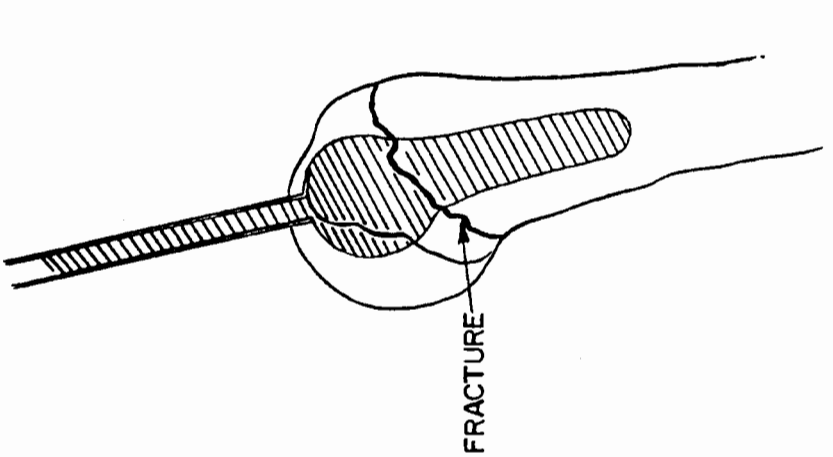

FIG.34

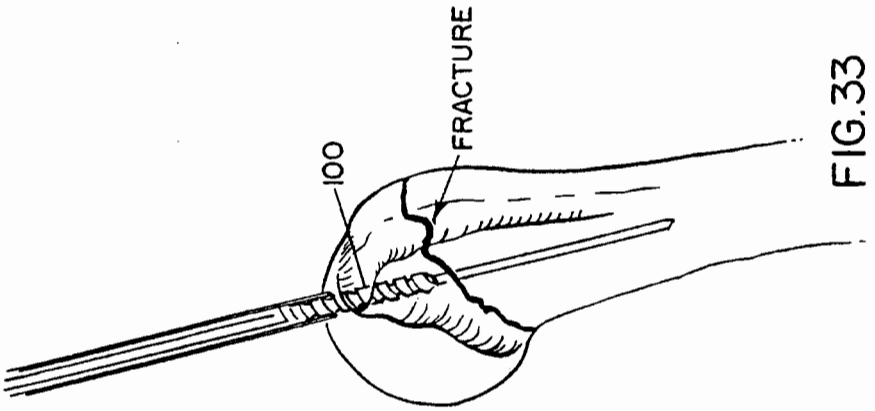

FIG.33

:04-cv-00204-JJF Document 168 Filed 04/14/2005 Page 45 of 108

SURGICAL PROTOCOL FOR FIXATION OF OSTEOPOROTIC BONE USING INFLATABLE DEVICE

This invention relates to improvements in the surgical treatment of bone conditions of the human and other animal body systems due to osteoporosis and, more particularly, to a method and apparatus for use in correcting such conditions.

BACKGROUND OF THE INVENTION

Every year in the United States there occurs approximately 1.2 million fractures due to osteoporosis. Nine hundred thousand (900,000) of those fractures occur in bones which can be treated with the percutaneous balloon technology of the present invention which includes instant fixation by methyl methacrylate cement or with liquid artificial bone substitutes. Those fractures which can be treated by the method and apparatus of the present invention are the Colles' fracture, the proximal humerus fracture, and the vertebral body compressions fracture.

Osteoporotic vertebral body compression fractures are currently treated with bed rest, analgesics, and intravenous hydration during the first week after onset of the problem. These steps are followed by the prescription of a soft or firm spinal corset, depending upon the physician's preference. In most cases, the corset is not worn because the patient suffers much discomfort and oftentimes greater discomfort than that due to the fracture of the vertebral body. The fracture pain lasts from two to eight months. In many cases, patients with osteoporotic vertebral body collapse fractures require about one week in an acute care hospital and two to three weeks in an extended care facility until they are able to move about independently and with only moderate pain. Current treatment does not substantially alter the conditions of the vertebral body.

The current management of osteoporotic shoulder fractures includes either long term immobilization in a sling, followed by lengthy physical therapy. If the fracture is in three or four parts, the fracture is treated with a shoulder hemiarthroplasty. Long term stiffness is the rule, following either treatment due to long term immobilization and/or extensive wound healing.

Osteoporotic Colles' fractures of the wrist in the elderly are currently treated in three different ways: (1) they are treated with closed reduction and application of a short arm cast for one or more weeks; (2) they can be treated with a short arm cast without reduction; and (3) they may be treated with closed reduction and pins and plaster immobilization for eight weeks. All treatment modalities result in considerable stiffness and have frequent malunions of the fractures.

Because of the problems associated with the treatment of vertebral body fractures, Colles' fractures, shoulder fractures and other osteoporotic conditions similar thereto, a need has existed for a method and apparatus to improve on the protocol for treating such fractures such as shortening the time in which a patient suffers pain due to such fracture. The present invention provides apparatus and a method of percutaneous fracture fixation which satisfies this need.

SUMMARY OF THE INVENTION

This invention relates to a method and apparatus for the fixation of fractures of osteoporotic bones. The

invention is especially suitable for use in the fixation of vertebral body compression fractures, Colles' fractures and fractures of the proximal humerus. The method of the present invention includes a series of steps including forming an incision in the body and penetrating the bone having the fracture with instruments including a guide pin and a cannula, drilling the osteoporotic bone marrow of the bone to enlarge the cavity or passage to be treated, following which an inflatable device, such as an expandable balloon, is inserted in the cavity and inflated. The expansion of the balloon causes a compacting of the osteoporotic bone marrow against the inner surface of the outer cortical wall of the bone to be treated to further enlarge the cavity. Then, a flowable synthetic bone material or methyl methacrylate cement is directed into the cavity and allowed to set to a hardened condition. Following this, the instruments are removed and the incision in the skin is covered with a bandage.

In the fixation of vertebral body fractures, an elliptical inflatable device is first used, if needed, to initiate the compacting of the osteoporotic bone marrow and to commence the formation of a cavity or passage in the osteoporotic bone marrow, following which a checker-shaped inflatable device is inserted into the cavity to further compact the osteoporotic bone marrow in all directions. In the fixation of Colles' fractures and proximal humerus fractures, a gourd-shaped inflatable device is used to compact the osteoporotic bone marrow.

It is the intention of the present invention to provide, in each case of a fracture of osteoporotic bone, an inflatable device that has a shape preferably approximating the internal surface configuration of the cortical bone in which the device is used. Thus, the inner surface configuration of the cortical bone of a vertebral body is disk-shaped or checker-shaped, the cortical bone of distal radius is gourd-shaped and the cortical bone of the proximal humerus is also gourd-shaped.

BRIEF DESCRIPTION OF THE DRAWINGS

FIG. **1** is a perspective view of a patient about to undergo the surgical treatment of vertebral body fixation in accordance with the method of the present invention, the patient lying prone on a U-shaped holder;

FIG. **2** is a front elevational view of the patient on the holder;

FIG. **3** is a side elevational view of the patient, showing hyperextension of the spine of the patient;

FIG. **4** is a perspective view of the rear portion of the patient showing the patient lying between the sides of the holder;

FIG. **5** is a stabilizer bracket for a guide pin and a cannula forming parts of the apparatus for carrying out the method of the present invention;

FIG. **6** is a perspective view of the patient holder shown in FIGS. **1**, **2** and **4**;

FIG. **7** is another perspective view of the holder of FIG. **6** looking upwardly from the bottom thereof;

FIG. **8** is a top plan view of the portion of the patient showing several vertebral bodies of the patient and the way in which the a guide pin enters a patient for carrying out the method of the present invention;

FIG. **9** is a schematic front elevational view of the patient and a vertebral body of the patient showing the entry angles of the guide pin of the apparatus of the present invention;

FIG. 10 is a side elevational view of the vertebrae, showing a guide pin inserted into one of the vertebral bodies;

FIG. 11 is a top plan view of the guide pin inserted into the vertebral body:

FIG. 12 is a perspective view of the guide pin placed within the vertebral body and a tissue expander sliding on the guide pin to the vertebral body;

FIG. 13 is a side elevational view of the tissue expander over the guide pin;

FIG. 14 is a view similar to FIG. 12 but showing a cannula carried by the tissue expander toward the vertebral body;

FIG. 15 is a view similar to FIG. 13 but showing teeth of the cannula embedded in the outer wall of the vertebral body;

FIG. 16 is a view similar to FIG. 14 but showing another view of the cannula embedded in the cortical wall of the vertebral body;

FIG. 17 is a view similar to FIG. 15 but showing the withdrawal of the tissue expander through the cannula;

FIG. 18 is a view similar to FIG. 11 but showing a drill guided into the vertebral body by the guide pin through the cannula;

FIG. 19 is an enlarged perspective view of the drill of FIG. 18;

FIG. 20 is a view similar to FIG. 18 but showing an elliptical inflatable device inserted into the vertebral body to expand the osteoporotic bone marrow in the vertebral body;

FIG. 21 is a checker-shaped inflatable device in the vertebral body to complete the expansion of the osteoporotic bone marrow in the vertebral body;

FIG. 22 is a top plan view of the checker-shaped inflatable device of FIG. 21;

FIG. 23 is a side elevational view of the checker-shaped inflatable device of FIG. 22;

FIG. 24 is a view similar to FIGS. 20 and 21 but showing the insertion of the inflatable device of FIG. 22 into a vertebral body;

FIG. 25 is a view similar to FIG. 24 but showing the insertion of a liquid artificial bone or methyl methacrylate cement into the vertebral body to replace the osteoporotic bone marrow;

FIG. 26 is an enlarged, fragmentary perspective view for directing liquid bone or methyl methacrylate cement into the vertebral body;

FIG. 27 is a side elevational view of the vertebral body after the liquid bone has been injected into the interior thereof;

FIG. 28A is a schematic side view of a vertebral body showing the initial insertion of an elliptical inflatable device in the vertebral body and before inflation of the device;

FIG. 28B is a view similar to FIG. 28A but showing partial inflation of the inflatable device of FIG. 28A to initiate a cavity or passage in the bone marrow of the vertebral body;

FIG. 28C is a view similar to FIG. 28B but showing a checker-shaped inflatable device in the vertebral body to further compact the osteoporotic bone marrow in the vertebral body;

FIG. 28D is a view similar to FIG. 28C but showing the initial injection stage in which liquid bone or methyl methacrylate cement is injected into the vertebral body;

FIG. 28E is a view similar to FIG. 28D but showing the vertebral body after the liquid bone or methyl methacrylate cement has set to a hardened condition;

FIG. 29 is a schematic top plan view of a distal radius fracture of the wrist, the fracture at the end of the radius being aligned with Chinese finger traps;

FIG. 30 is a view similar to FIG. 29 but looking in a different direction at the hand but illustrating the fracture;

FIG. 31 is a view of the fracture with the guide pin being inserted through the interface of the fracture;

FIG. 32 is a view similar to FIG. 31 but showing a drill in the radius, and the area to be filled with liquid bone or methyl methacrylate cement;

FIG. 33 is a side elevational view of a shoulder showing a fracture therein; and

FIG. 34 is a view similar to FIG. 33 but showing the bone fracture and cavity to be filled with liquid bone or methyl methacrylate cement.

DETAILED DESCRIPTION OF THE DRAWINGS

Percutaneous vertebral body fixation is indicated for all causes of spontaneous osteoporotic vertebral body collapse fractures except those due to infection or neoplasia. The etiology of the osteoporosis should be diagnosed prior to fixation. Concomitant endocrine therapy, chemotherapy or radiation is not contraindicated with percutaneous vertebral fracture fixation.

Impending vertebral body collapse due to osteoporosis as determined by the presence of previous collapse fractures and increased uptake on technetium-99 bone scan in a non-collapsed vertebral body. Various CT density values may eventually correlate with impending vertebral body collapse and be utilized to predict impending vertebral body fractures.

Contradictions of such fixation are as follows:

Presence of pyogenic infection;

Presence of tuberculous infection;

Presence of neoplasia;

Presence of sepsis;

High velocity spinal fractures;

Fractures above the level of T-6; and

Fractures which demonstrated widened pedicles on AP spine x-rays.

In carrying out the teachings of the method of the present invention as to osteoporotic vertebral fixation, a patient **10** is placed on a generally U-shaped holder **12** so that the patient lies above the central part **14** of holder **12** and between a pair of spaced sides **16** and **18** as shown in FIGS. **1, 2** and **4**. Holder **12** can be of any suitable construction, such as metal or plastic and is constructed to render the patient generally immovable when the patient is prone as shown in FIGS. **1–4**. The length of sides **16** and **18** is preferably sufficient to achieve the aim of rendering the patient generally immovable.

Typically, the length of sides **16** and **18** is approximately 12 to 15 inches. For the comfort of the patient, a cushion **20** is provided above central part **14** as shown in FIG. **2**. The central part **14** has holes **22** therethrough (FIGS. **6** and **7**) and the holes are for the purpose of receiving circular portions of the cushion **20** formed due to the weight of the patients to anchor the cushion in place and to prevent it from moving relative to holder **12** when the patient's body is on the cushion as shown in FIG. **2**. This assures that the cushion will not contribute to the movement of the patient relative to the holder. Pads **24** and **26** are placed at the chest and hip regions of the patient for the comfort of the patient and to extend the spine.

FIG. 5 shows a support bracket 28 adjustably mounted on the sides 16 and 18 of holder 12. The purpose of bracket 28 is to support a cannula 30 and guide pin 70 forming part of the apparatus of the present invention. Cannula 30 will be described hereinafter in more detail.

Bracket 28 includes a pair of clamps 31 and 32 for releasably connecting the bracket to respective sides 16 and 18 of holder 12 by means of thumb screws 34. Bracket 28 further includes a pair of legs 38 and 40 which are made up of connectable extensions as shown in FIG. 5. Legs 38 and 40 are releasably connected to respective clamps 31 and 32 by thumb screws 42 and 44. A rod 46 is connected by thumb screws 48 and 50 to end sleeves 52 and 54 on the upper ends of respective legs 38 and 40. Rod 46 can be rotated in the sleeves 52 and 54 to thereby rotate a clamp 56 coupled to the rod 46 and having a leg 58 on which cannula 30 and guide pin 70 are adjustably mounted. Thus, the cannula can be moved toward or away from legs 38 and 40 and can rotate about the longitudinal axis of rod 46. In this way, the cannula can be adjusted as to the distance from the patient to rod 46 as well adjust the position of the bracket 28 by means of shifting clamps 31 and 32 along the sides of holder 12.

The teachings of the method of the present invention will be hereinafter described with respect to treatment of a person with osteoporotic spine disease. The presence of such disease is evidenced by a plain film spinal x-rays and either CAT-scan evidence of impending fracture or plain film x-ray evidence of vertebral body collapse. In obtaining such evidence, both sagittal and coronal CAT-scans should be obtained before the performance of the method of the present invention. The coronal scan is also needed to determine the width of the vertebral body which is to be treated and also to rule out the presence of posterior displacement of the colon which can interfere with the posterolateral approach which generally occurs in four percent of the patients. If the colon is noted, the approach must be altered to the other side of the body.

The sagittal CAT-scan is needed to determine the height of the vertebral body to be treated. If an acute compression fracture is present, then the appropriate height is determined by the height of the vertebral body located superior to the fracture. If the patient has an acute fracture of a vertebral body, the patient is to be placed prone in the manner shown in FIGS. 1–4.

Attempts to reconstitute the height of the vertebral body should be made by hyperextending the patient's spine as shown in FIG. 3. If the patient has an impending fracture of a vertebral body, then the patient can be positioned either prone as shown in FIGS. 1–4 or on his side depending upon the surgeon's preference. If on the side, the patient is rendered immovable by suitable structure for holding the patient in one position during the time that the method of the present invention is being performed.

The posterolateral approach is used whether the patient is prone (FIGS. 1–4) or in the lateral position. Then the entry point on the skin is determined radiologically and is located approximately 10 cm from the midline and just inferior to a rib if present at that level as shown in FIG. 8.

FIG. 8 shows the entry points of the instruments for carrying out the method of the present invention for two vertebral bodies spaced from each other. The instrument shown in FIG. 8 is a guide pin 70 which enters the patient at an inoision 62 (FIG. 8). A choice of angle of entry of the guide pin 70 can be 30° to 45° as shown in FIG. 9. The vertebral body to be injected is located fluoroscopically. The skin, underlying soft tissue and lateral cortex of the vertebral body are injected with a long spinal needle. General anesthesia is not advisable.

The surgical procedure for treating a vertebral body is as follows:

The vertebral body 66 to be treated (FIGS. 10 and 11) is penetrated by the pointed end 68 of guide pin 70 which enters the vertebral body between the inferior and superior end plates of the body 66 and into the posterior quarter of the vertebral body. Pedicles are to be ignored. The guide pin penetrates to a depth in the range of 60 to 80% across vertebral body 66 as shown in FIG. 11. Placement of the pin is fluoroscopically monitored. Any further penetration beyond 70% runs the risk of perforation of the vertebral body and an adjacent major vessel or lung.

With the guide pin penetrating the vertebral body 66 as shown in FIGS. 10 and 11, a soft tissue expander 71, which is a tubular member as shown in FIGS. 12 and 13, is inserted over the guide pin until the end of the expander makes contact with the vertebral body as shown in FIG. 13. Expander 71 then forms a guide for cannula 30 to guide the cannula toward the vertebral body to be treated.

When the cannula makes contact with the wall of the vertebral body, the cannula is rotated clockwise under pressure to force the teeth 31 of the cannula into the wall of the vertebral body 66 as shown in FIG. 15. This locks the cannula into the wall as shown in FIG. 16 so that the cannula can be coupled to bracket 28 (FIG. 5) for stabilization thereby. Then, the expander 71 can be removed from the interior of cannula 30 as shown in FIG. 17.

Once the cannula is stabilized, a drill stop is formed to prevent penetration of the far cortex of the vertebral body by drill 72 (FIGS. 18 and 19). The drill stop is formed by a shoulder 67 on pin 70 (FIG. 19) which is engageable with shoulder 69 on drill 72 and holding pin 70 with bracket 28.

Vertebral body 66 is drilled by a 4 mm drill 72. The drilling depth is monitored by fluoroscopy to the end of the guide 10. The drill is tubular and is guided by the guide pin 70 as shown in FIG. 19.

The next step to be performed in carrying out the method of the present invention is to withdraw the pointed guide pin 70 and replace it with a deflated elliptical device or chambered bladder or balloon 65. The elliptical balloon 65 is monitored fluoroscopically. This is achieved by inflating the elliptical balloon 65 to a pressure in the range of 50 to 300 psi with a radio-opaque contrast medium by an injector as shown in FIG. 24. The purpose of the elliptical balloon 65 is to center a second, checker-shaped inflatable device or balloon 76 (FIGS. 21–23) in the interior of vertebral body 66. After the elliptical balloon is deflated and removed, checker-shaped or cylindrically shaped device of balloon 76 is inserted into the cannula and directed into the interior of vertebral body 66 as shown in FIG. 21.

The diameter of balloon 76 is determined by the pre-operative CAT-scan results. The diameter is in the range of 1.0 cm to 3.5 cm. The axial height of the balloon (FIG. 23) is determined by the intra-operative reduction height of the vertebral body fracture. The height is in the range of 0.5 cm to 4.0 cm. If the balloon

placement is somewhat eccentric, a smaller balloon may be needed. The balloon **76** has a neck **77**, and the outer configuration of the balloon **76** is substantially the same as that of the inner surface of the cortical wall of the vertebral body **66**.

The progress of balloon inflation is monitored fluoroscopically to ensure proper insertion of the balloon **76**. The balloon is injected, gradually, with contrast as in the case of the elliptical balloon to a maximum height. This may require pressure as great as 300 psi to accomplish. The balloon's inflation should be monitored on the lateral fluoroscopic view of the spine. Posterior displacement of the bone into the spinal canal or full expansion of balloon **76** signals the termination of the chamber preparation. Further expansion of the balloon at this point could result in spinal cord or root injury.

As balloon **76** is inflated, it forces the osteoporotic bone marrow **67** laterally and outwardly of the wall of the vertebral body **66**. This compacts the bone marrow and leaves a void in the interior of the vertebral body to be treated. The compacted bone marrow forms a dam to block any fracture of the vertebral body. Thus, when liquid synthetic bone or methyl methacrylate cement is forced into the void, the compacted bone marrow will substantially prevent flow through the fracture.

After the balloon **76** has been deflated it is removed from the cannula **30**. An irrigation nozzle (not shown) is then inserted into the vertebral body **66**. Irrigation is performed with normal saline solution. Irrigation should be performed until the effluent is reasonably clear.

After the vertebral body has been irrigated, the artificial bone substitute, which may include a synthetic bone or methyl methacrylate cement, is injected into the void left by the inflation of balloon **76**. A double barrel injection gun nozzle aspirates constantly through the short barrel. Such injection gun nozzle is shown in FIGS. **25** and **26** and includes a material delivery tube **80** and an aspirating tube **82**, both of which have open ends **84** and **86**, respectively. Injection of synthetic bone material is monitored using lateral fluoroscopy. Leakage posteriorly into the canal of tube **82** requires an abrupt stopping of the injection. Leakage anteriorly is exceedingly rare since the anterior longitudinal ligament is intact with these fractures.

The volume of injection ranges between 3 and 5 cc's. A larger volume is injected than one would predict from the size of the chamber formed with balloon **76** even in those patients injected prophylactically.

The injection gun nozzle shown in FIG. **26** is slowly removed as the vertebral body is injected with artificial bone or cement. At the entry hole into the vertebral body the tip of the injection nozzle is twisted as the cement sets up. At that time, the injection gun nozzle should be removed. FIGS. **28**A and **28**B show the sequence of the expansion of elliptical balloon **65**. FIGS. **28**C and **28**D show checker-shaped balloon **76** in the vertebral body **66**. FIG. **28**E shows the vertebral body after the mass **81** of artificial bone or methyl methacrylate cement has set to a hardened condition.

After the proper volume of artificial bone or cement has been inserted into the void of the vertebral body, cannula **30** is removed and the skin is dressed with a bandage.

Surgical protocol for Colles' fractures are described as follows with reference to FIGS. **29-32**.

The current treatment for distal radius fractures of the wrist in osteoporotic patients includes: (1) closed reduction and application of a short arm cast with the wrist in a flexed position for six weeks; (2) application of a short arm cast without reduction of the fracture; and (3) closed reductions of the fracture with Chinese finger traps and application of pins and plaster. All three techniques require cast immobilization for 6 to 8 weeks and result in considerable stiffness for many months. In the case of the second treatment described, the wrist is also malpositioned.

The treatment of the present invention involves the reduction of the fracture with Chinese finger traps and the subsequent use of a balloon to create a chamber followed by the injection of either methyl methacrylate cement or a flowable bone substitute into the chamber to fix the fracture. Immobilization would only be a removable splint for two to four weeks. The wrist would be exercised daily to prevent the subsequent stiffness which usually follows wrist fracture.

The steps involved in this procedure are the same as those listed for the percutaneous fixation of vertebral body fractures. The Colles' fracture is positioned this time using finger traps **90** as shown in FIGS. **29** and **30**. Local anesthesia is injected. The hand and forearm are prepped in the usually sterile fashion. A smooth guide pin **92** (FIG. **31**) is inserted from the tip of the styloid at a 45° angle across the fracture **93**. This is followed by a soft tissue expander and then a 2 mm cannula **91**. A 2 mm drill **94** (FIG. **32**) is then used to drill a canal or passage across the fracture using fluoroscopic control. The drill and guide pin are removed and a gourd-shaped distal radius balloon **95** is introduced into the fracture region through the cannula. The balloon **95** has a configuration substantially the same as that of the inner surface of the cortical bone. The deflated diameter of a globe-shaped part **95***a* of balloon **95** is in the range of 7 to 10 mm, the overall length L is in the range of 4 to 7 cm, and cylindrical part **95***b* has a length in the range of 5 to 8 mm.

The balloon **95** is expanded with contrast liquid using x-ray control. Expansion of the balloon **95** causes compacting of the osteoporotic bone marrow against the inner surface of the cortical wall. The balloon is then deflated and the cavity is then injected with a mass **97** of either methyl methacrylate cement or liquid bone substitute. A splint is used for two to four weeks.

Surgical protocol for the percutaneous fixation of proximal humerus fractures is as follows, with reference to FIGS. **33** and **34**:

Percutaneous intra-osseous balloon fixation is indicated for all one-part shoulder fractures (i.e. non-displaced shoulder fractures), all two-part shoulder fractures except greater tuberosity fractures, and all three-part fractures that do not include a prominent elevation of the greater tuberosity or could be better treated with a hemiarthroplasty. It is not now indicated for four-part fractures.

The fracture is reduced with the patient sitting upright. The fracture is injected with local anesthesia as is the area just posterior to the greater tuberosity where a guide pin will be introduced. The fracture is reduced with traction and held by an assistant. A guide pin is introduced through the head of the humerus just posteriorly to the greater tuberosity and followed fluoroscopically across the fracture to approximately 8 cm below the fracture. The soft tissue expander is introduced followed by the 3 mm cannula. A canal is drilled over the guide pin with a 3 mm drill **100** and the drill and guide pin are removed.

A gourd-shaped proximal humerus inflatable device or balloon is introduced into the cavity and inflated using contrast and fluoroscopic control. The balloon is then removed and then the cavity is injected with a mass **101** of either methyl methacrylate cement or a liquid artificial bone substitute as shown in FIG. **34**. The fracture is held until the injected substance hardens. The entry site on the top of the shoulder is dressed with a steri-strip and the patient is given a sling for 2 to 4 weeks. During those weeks, the patient should remove the sling several hours a day but perform no heavy lifting.

The gourd-shaped proximal humerus balloon has a configuration substantially the same as that of balloon **95** (FIGS. **31** and **32**). The diameter of the globe-shaped part of the proximal humerus balloon is in the range of 14 to 20 mm. The diameter of the cylindrical part is in the range of 6 to 8 mm, and its length is in the range of 8 to 14 cm.

We claim:

1. A method of fixation of a fracture or impending fracture of an osteoporotic bone having osteoporotic bone marrow therein comprising:

forming a passage in the bone marrow;

compacting the bone marrow to increase the volume of said passage and

filling the passage with a flowable material capable of setting to a hardened condition.

2. A method as set forth in claim **1**, wherein said compacting step includes forcing the osteoporotic bone marrow outwardly and against the site of the fracture or impending fracture.

3. A method as set forth in claim **1**, wherein said compacting step includes forcing the osteoporotic bone marrow outwardly of the central portion of the bone.

4. A method as set forth in claim **3**, wherein said forcing step includes direction the osteoporotic bone marrow against an inner surface of the bone within the fracture or impending fracture.

5. A method as set forth in claim **1**, wherein said compacting step includes inflating an inflatable device in said passage to urge the osteoporotic bone marrow therein.

6. A method as set forth in claim **5**, wherein is included the step of inserting the device in the passage before the inflating step.

7. A method as set forth in claim **1**, wherein said forming step includes drilling said osteoporotic bone marrow to form said passage.

8. A method as set forth in claim **7**, wherein said drilling step includes guiding a drill through into the proximate corticol bone marrow.

9. A method as set forth in claim **7**, wherein said forming step includes drilling the osteoporotic bone marrow to a predetermined depth.

10. A method as set forth in claim **9**, wherein said depth is in the range of approximately 60 to 80% of the maximum oblique dimension of the bone containing the osteoporotic bone marrow.

11. A method as set forth in claim **1**, wherein the fracture is a fracture of a vertebral body of the human spine.

12. A method as set forth in claim **1**, wherein said fracture is a Colles' fracture of the distal radius.

13. A method as set forth in claim **1**, wherein said fracture is a fracture of the proximal humerus.

14. A method as set forth in claim **1**, wherein said flowable material is selected from the group consisting of liquid synthetic bone and methyl methacrylate cement.

15. A method of fixation of an osteoporotic fracture of a bone containing osteoporotic bone marrow therein comprising:

drilling said bone to form a passage therein;

inserting an inflatable device in said recess;

inflating the device in the passage to increase the volume thereof and to force the osteoporotic bone marrow outwardly of the passage and against the bone to form a void in the bone; and

filling the void in the bone with a flowable material capable of setting to a hardened condition.

16. A method as set forth in claim **15**, wherein said inflating step includes inflating a chambered bladder device having an elliptical configuration.

17. A method as set forth in claim **15**, wherein said inflating step includes inflating a chambered bladder device having generally cylindrical configuration.

18. A method as set forth in claim **15**, wherein is included the step of guiding a drill into the bone.

19. A method as set forth in claim **15**, wherein said inflating step includes inflating the device with a radio-opaque material.

20. A method as set forth in claim **16**, wherein said inflating step includes compacting the osteoporotic bone marrow against the bone at the fracture site thereof.

21. A method as set forth in claim **15**, wherein said inflating step includes forcing the osteoporotic bone marrow outwardly of the central portion of the bone.

22. A method as set forth in claim **21**, wherein said inflating step includes compacting the osteoporotic bone marrow against an inner surface of the bone.

23. A method as set forth in claim **15**, wherein said drilling step includes guiding a drill into the bone, and rotating the drill about its longitudinal axis.

24. A method as set forth in claim **23**, wherein said drilling step includes drilling the osteoporotic bone marrow to a predetermined depth.

25. A method as set forth in claim **24**, wherein said depth is in the range of approximately 60 to 80% of the maximum oblique dimension of the bone.

26. A method as set forth in claim **15**, wherein the fracture is a fracture of a vertebral body of the human spine.

27. A method as set forth in claim **15**, wherein said fracture is a Colles' fracture of the distal radius.

28. A method as set forth in claim **15**, wherein said fracture is a fracture of the proximal humerus.

* * * * *

G

US006235043B1

(12) **United States Patent**
Reiley et al.

(10) **Patent No.: US 6,235,043 B1**
(45) **Date of Patent: May 22, 2001**

(54) **INFLATABLE DEVICE FOR USE IN SURGICAL PROTOCOL RELATING TO FIXATION OF BONE**

(75) Inventors: **Mark A. Reiley**, Piedmont; **Arie Scholten**, Fremont; **Karen Talmadge**, Palo Alto, all of CA (US)

(73) Assignee: **Kyphon, Inc.**, Sunnyvale, CA (US)

(*) Notice: Subject to any disclaimer, the term of this patent is extended or adjusted under 35 U.S.C. 154(b) by 0 days.

(21) Appl. No.: **08/788,786**

(22) Filed: **Jan. 23, 1997**

Related U.S. Application Data

(63) Continuation of application No. 08/188,224, filed on Jan. 26, 1994, now abandoned.

(51) **Int. Cl.**[7] **A61M 29/00**

(52) **U.S. Cl.** **606/192**; 604/96

(58) **Field of Search** 606/191, 192, 606/95; 604/96, 916; 128/898

(56) **References Cited**

U.S. PATENT DOCUMENTS

1,965,653	7/1934	Kennedy .
3,091,237	5/1963	Skinner .

(List continued on next page.)

FOREIGN PATENT DOCUMENTS

3736604	11/1989	(DE) .
512456	9/1939	(GB) .
9001858	3/1992	(NL) .
906530	2/1982	(RU) .
1148610	4/1985	(RU) .

OTHER PUBLICATIONS

S.L. Silverman, "The Clinical Consequences of Vertebral Compression Fracture", *Bone*, 13, S27–S31 (1992).

Melton, III, L. Joseph et al., "Perspective: How Many Women Have Osteoporosis", *Journal of Bone and Mineral Research*, vol. 7, No. 9, 1992, pp. 1005–1010.

Harrington, Kevin D., The Use of Methylmethacrylate as an Adjunct in the Internal Fixation of Malignant Neoplastic Fractures, *The Journal of Bone and Joint Surgery*, vol. 54A, No. 8, Dec. 1972, pp. 1665–1676.

Instructions entitled "Exeter Pressurizer System", by Howmedica Inc., Orthopaedics Division, 1979, 2 pages.

B. Lawrence Riggs, M.D. and Joseph Melton III, M.D., "Medical Progress, Involutional Osteoporosis", *The New England Journal of Medicine*, Jun. 26, 1986, pp. 1676–1686.

Lawrence D. Cohen, M.D., "Fractures of the Osteoporotic Spine", Pathologic Fractures in Betabolic Bone Disease, *The Orthopedic Clinics of North America*, vol. 21:1, Jan. 1990, pp. 143–152.

* cited by examiner

Primary Examiner—Michael H. Thaler
Assistant Examiner—Julian W. Woo
(74) *Attorney, Agent, or Firm*—Ryan Kromholz & Manion

(57) **ABSTRACT**

A balloon for use in compressing cancellous bone and marrow (also known as medullary bone or trabecular bone) against the inner cortex of bones whether the bones are fractured or not. The balloon comprises an inflatable, non-expandable balloon body for insertion into said bone. The body has a shape and size to compress at least a portion of the cancellous bone to form a cavity in the cancellous bone and to restore the original position of the outer cortical bone, if fractured or collapsed. The balloon is prevented from applying excessive pressure to the outer cortical bone. The wall or walls of the balloon are such that proper inflation the balloon body is achieved to provide for optimum compression of all the bone marrow. The balloon is able to be folded so that it can be inserted quickly into a bone. The balloon can be made to have a suction catheter. The main purpose of the balloon is the forming or enlarging of a cavity or passage in a bone, especially in, but not limited to, vertebral bodies.

28 Claims, 10 Drawing Sheets

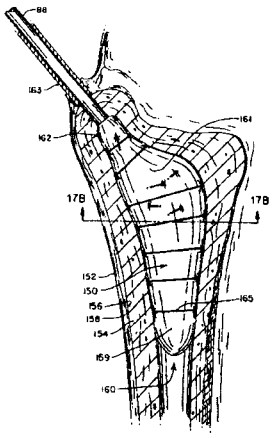

U.S. PATENT DOCUMENTS

3,112,743		12/1963	Cochran et al. .		
3,648,294		3/1972	Shahrestani .		
3,766,924		10/1973	Pidgeon .		
3,800,788		4/1974	White .		
3,850,176		11/1974	Gottschalk .		
3,875,595		4/1975	Froning .		
3,889,665		6/1975	Ling et al. .		
4,274,163		6/1981	Malcom et al. .		
4,313,434		2/1982	Segal .		
4,399,814		8/1983	Pratt, Jr. et al. .		
4,462,394		7/1984	Jacobs .		
4,466,435		8/1984	Murray .		
4,467,479		8/1984	Brody .		
4,488,549		12/1984	Lee et al. .		
4,562,598		1/1986	Kranz .		
4,595,006		6/1986	Burke et al. .		
4,625,722		12/1986	Murray .		
4,627,434		12/1986	Murray .		
4,628,945		12/1986	Johnson, Jr. .		
4,697,584		10/1987	Haynes .		
4,706,670		11/1987	Andersen et al. .		
4,714,478		12/1987	Fischer .		
4,772,287		9/1988	Ray et al. .		
4,888,022		12/1989	Huebsch .		
4,888,024		12/1989	Powlan .		
4,892,550		1/1990	Huebsch .		
4,896,662		1/1990	Noble .		
4,932,975		6/1990	Main et al. .		
4,969,888		11/1990	Scholten et al. .		
5,002,576		3/1991	Fuhrmann et al. .		
5,053,035		10/1991	McLaren .		
5,071,435		12/1991	Fuchs et al. .		
5,102,413		4/1992	Poddar .		
5,108,404		4/1992	Scholten et al. .		
5,147,366		9/1992	Arroyo et al. .		
5,163,989		11/1992	Campbell et al. .		
5,176,683		1/1993	Kimsey et al. .		
5,176,692	*	1/1993	Wilk et al.	606/151	
5,290,306	*	3/1994	Trotta et al.	606/194	
5,295,994	*	3/1994	Bonutti	606/192	
5,303,718		4/1994	Krajicek .		
5,330,429	*	7/1994	Noguchi et al.	604/96	
5,331,975	*	7/1994	Bonotti	606/192	
5,361,752	*	11/1994	Moll et al.	128/20	
5,383,932		1/1995	Wison et al. .		
5,423,850		6/1995	Berger .		
5,441,538		8/1995	Bonutti .		
5,454,365		10/1995	Bonutti .		
5,468,245		11/1995	Vargas, III .		
5,480,400		1/1996	Berger .		
5,514,143		5/1996	Bonutti et al. .		
5,514,153		5/1996	Bonutti .		
5,522,790		6/1996	Moll et al. .		
5,522,846		6/1996	Bonutti .		
5,527,343		6/1996	Bonutti .		
5,527,624		6/1996	Higgins et al. .		
5,531,856		7/1996	Moll et al. .		
5,540,711		7/1996	Kieturakis et al. .		
5,545,222		8/1996	Bonutti .		
5,549,679		8/1996	Kuslich .		
5,562,736		10/1996	Ray et al. .		
5,571,109		11/1996	Bertagnoli .		
5,571,189		11/1996	Kuslich .		
5,772,681	*	6/1998	Leoni	606/192	

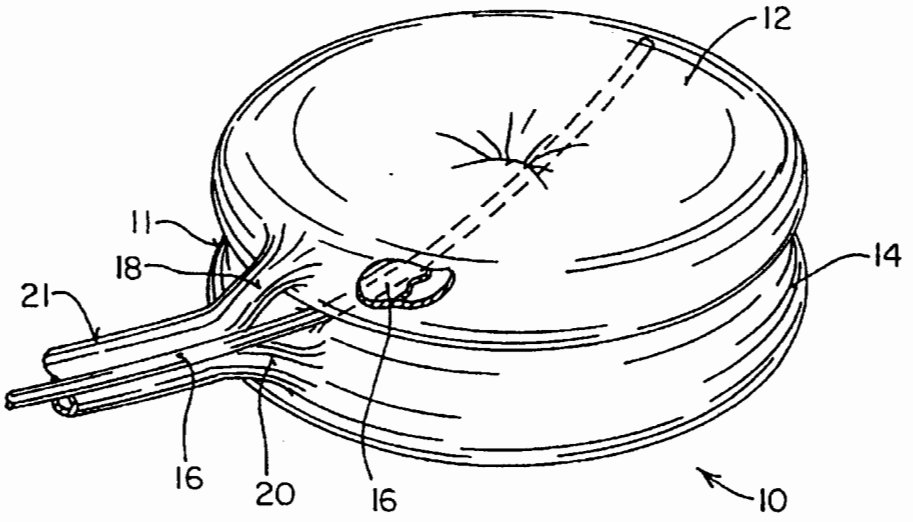

FIG. 1

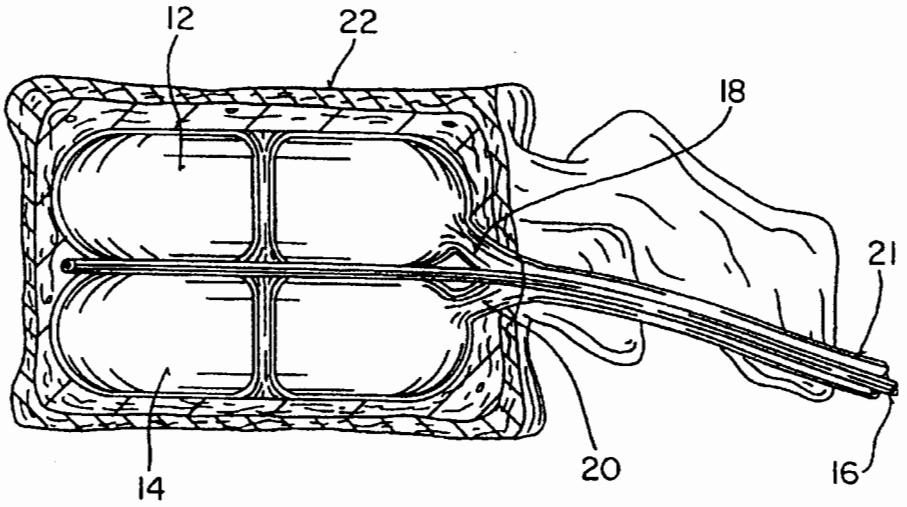

FIG. 2

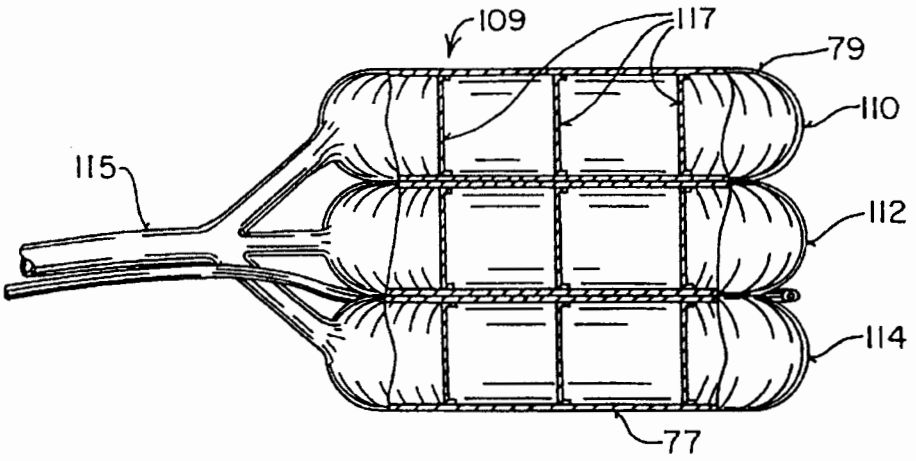

FIG. 3

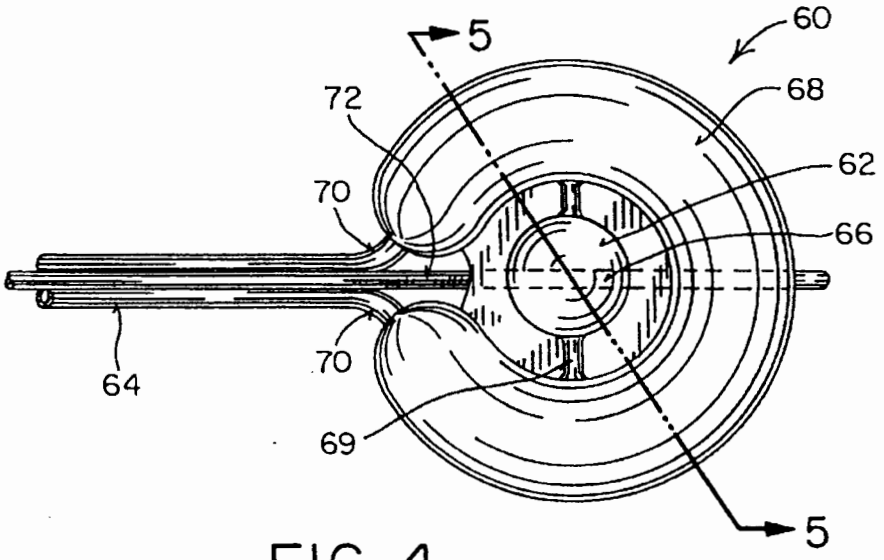

FIG. 4

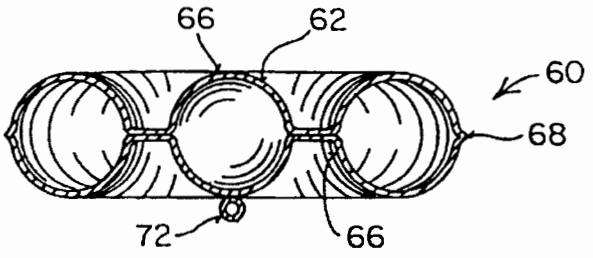

FIG. 5

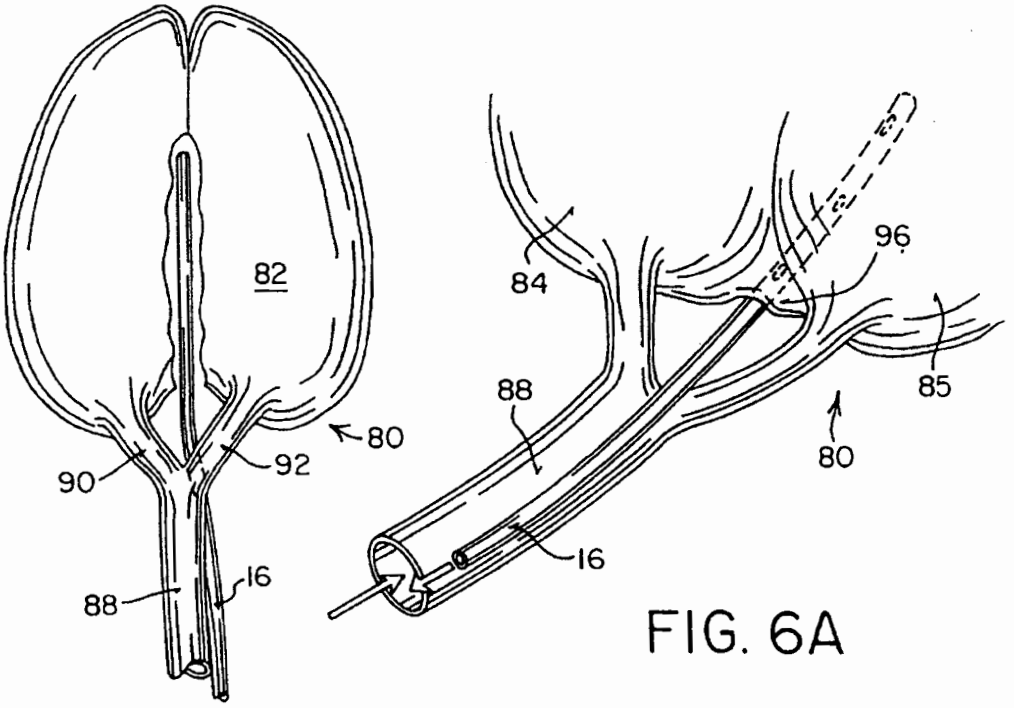

FIG. 6A

FIG. 6

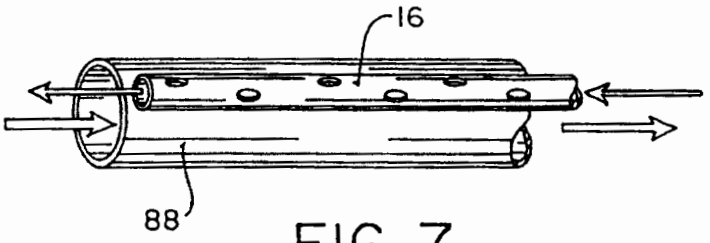

FIG. 7

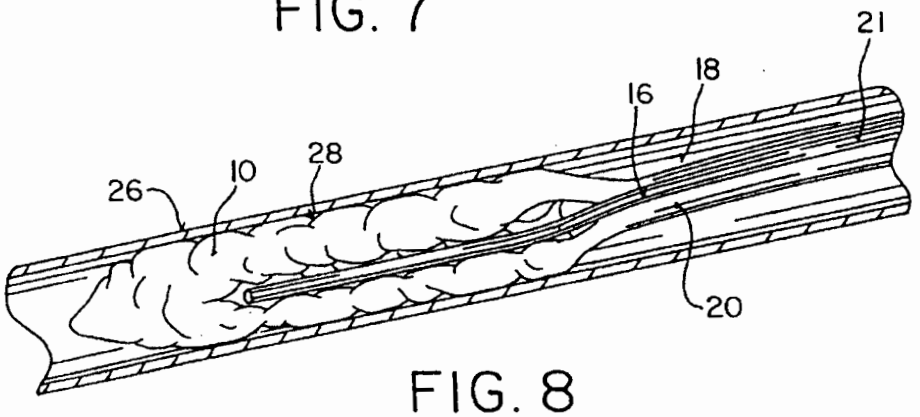

FIG. 8

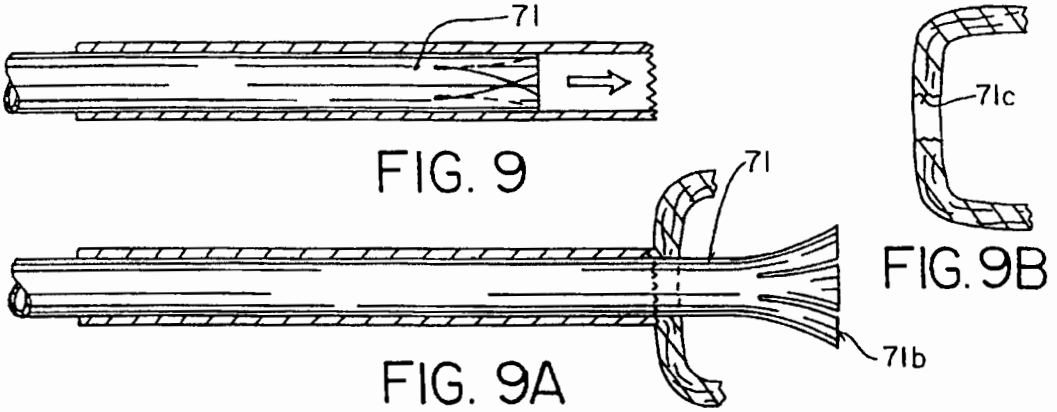

FIG. 9

FIG. 9B

FIG. 9A

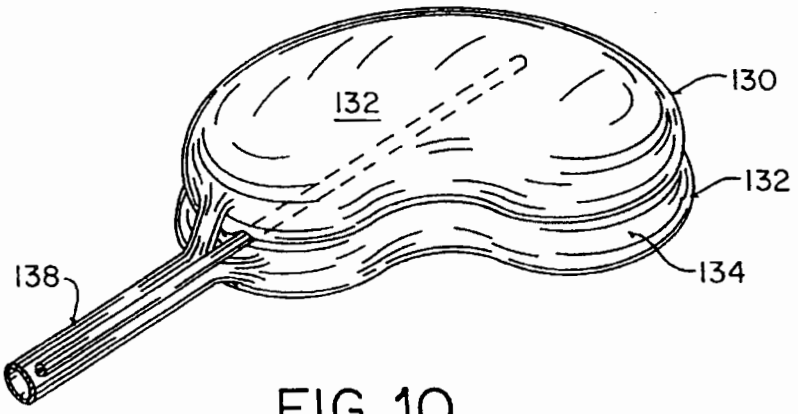

FIG. 10

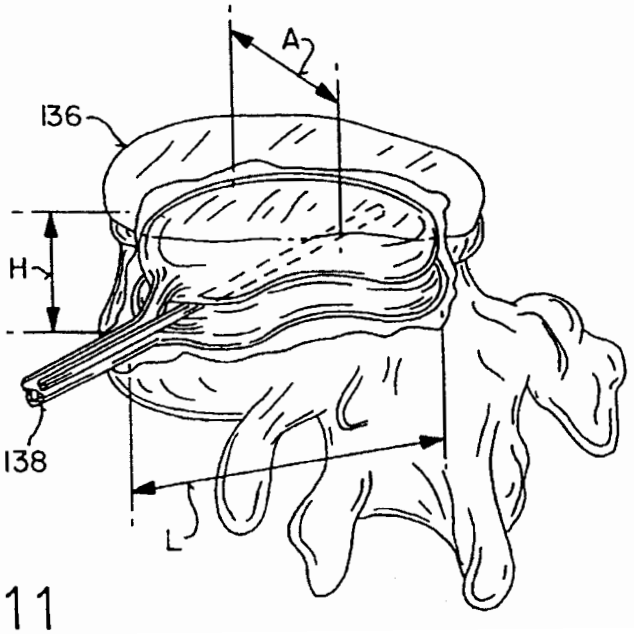

FIG. 11

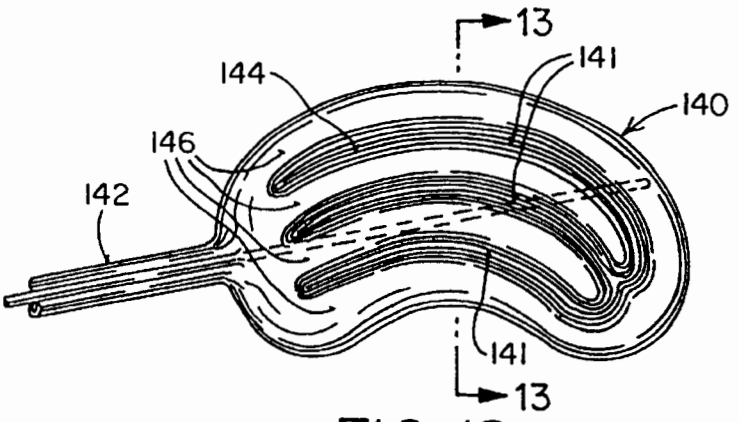

FIG. 12

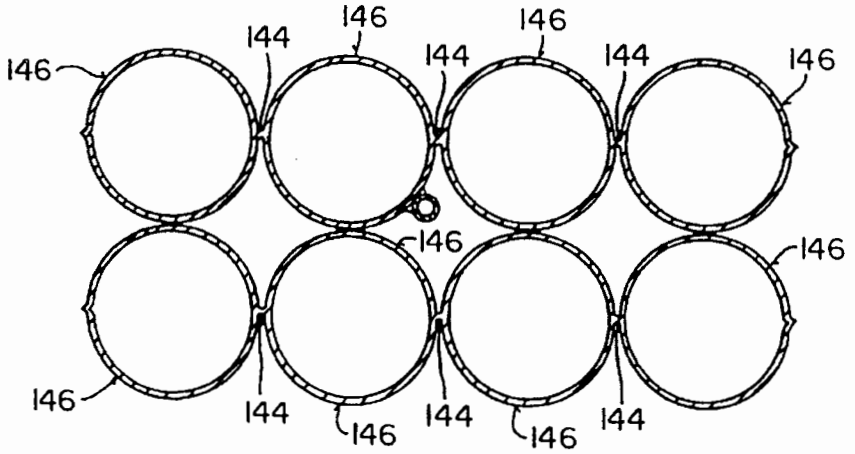

FIG. 13

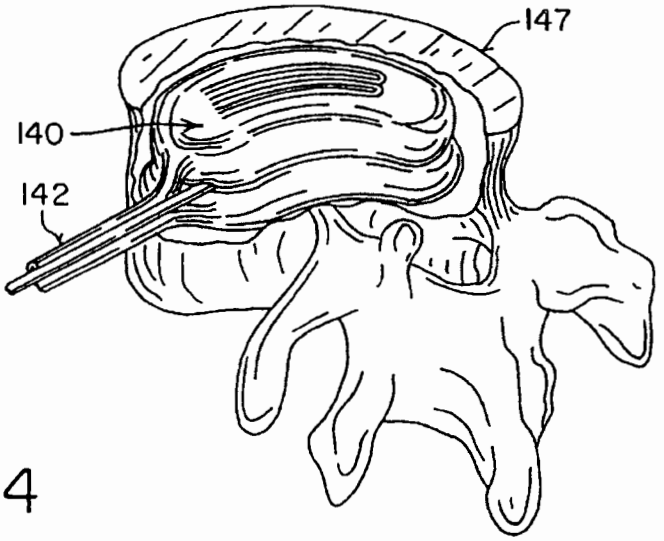

FIG. 14

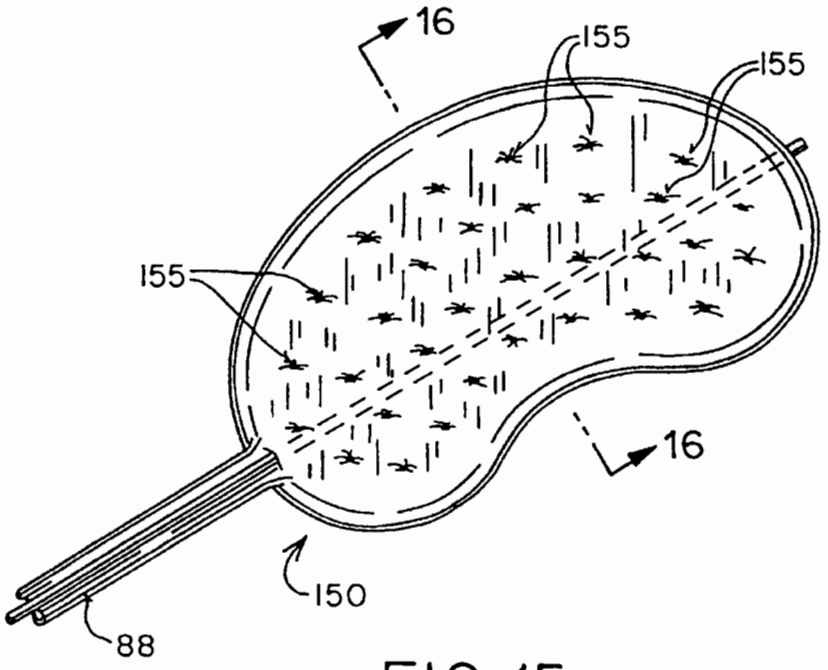

FIG. 15

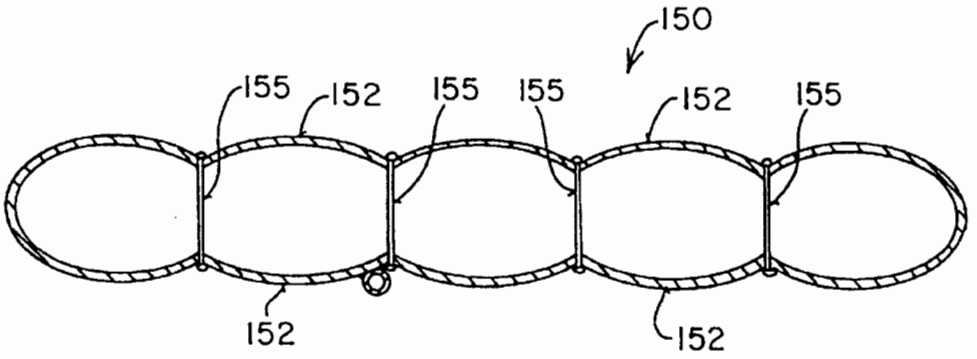

FIG. 16

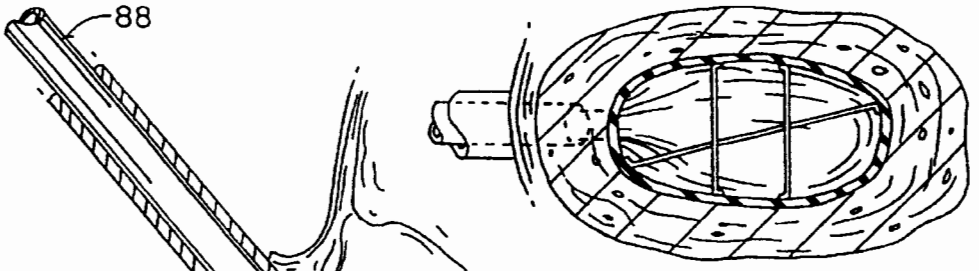

FIG. 17B

FIG. 17A

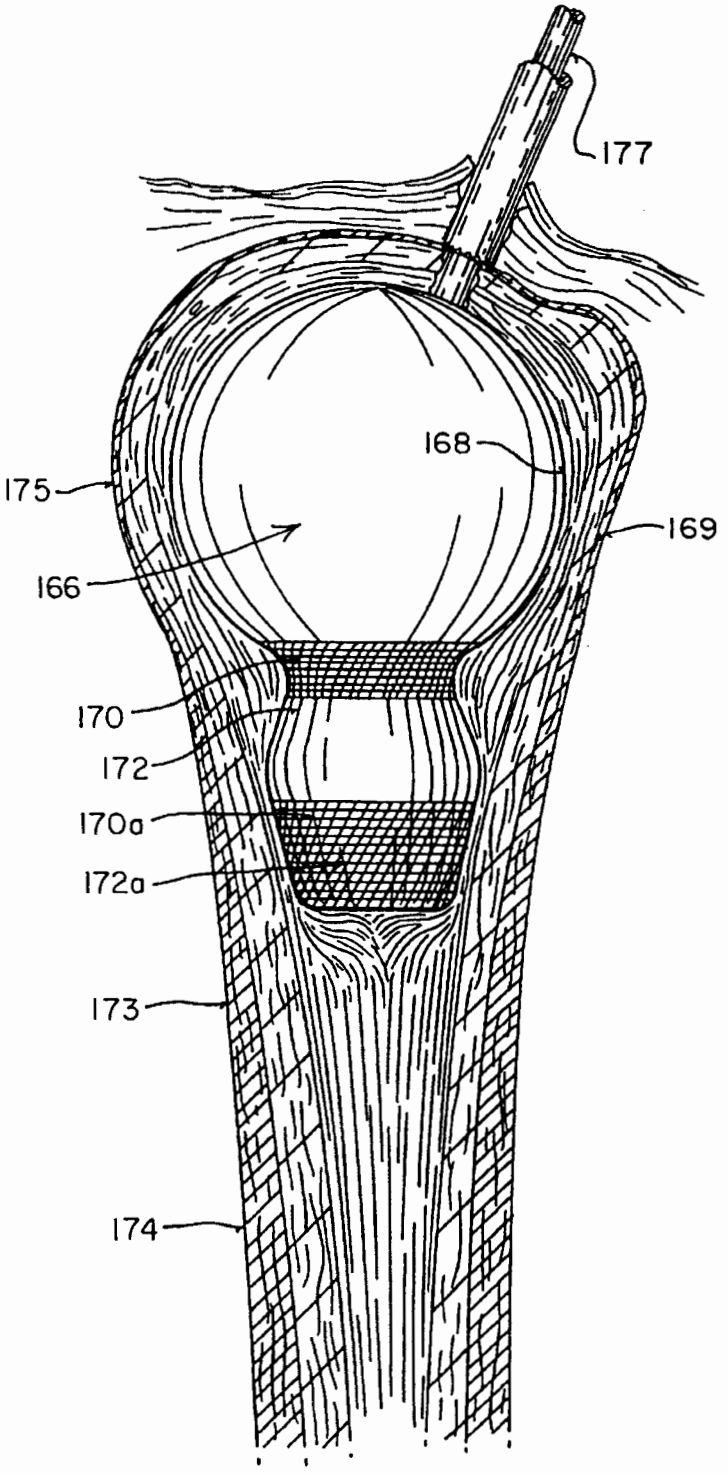

FIG. 18

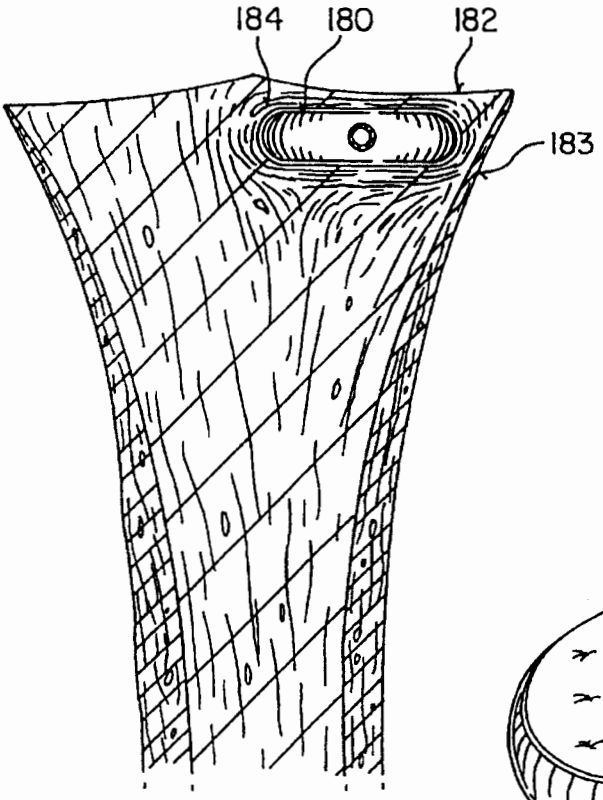

FIG. 19A

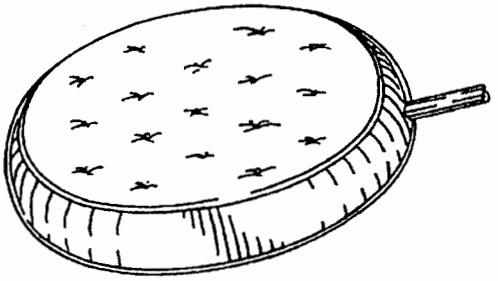

FIG. 19B

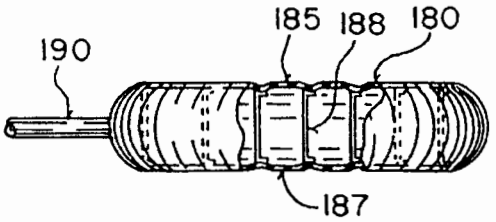

FIG. 19C

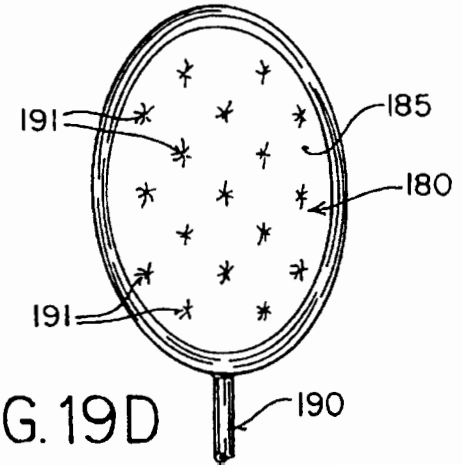

FIG. 19D

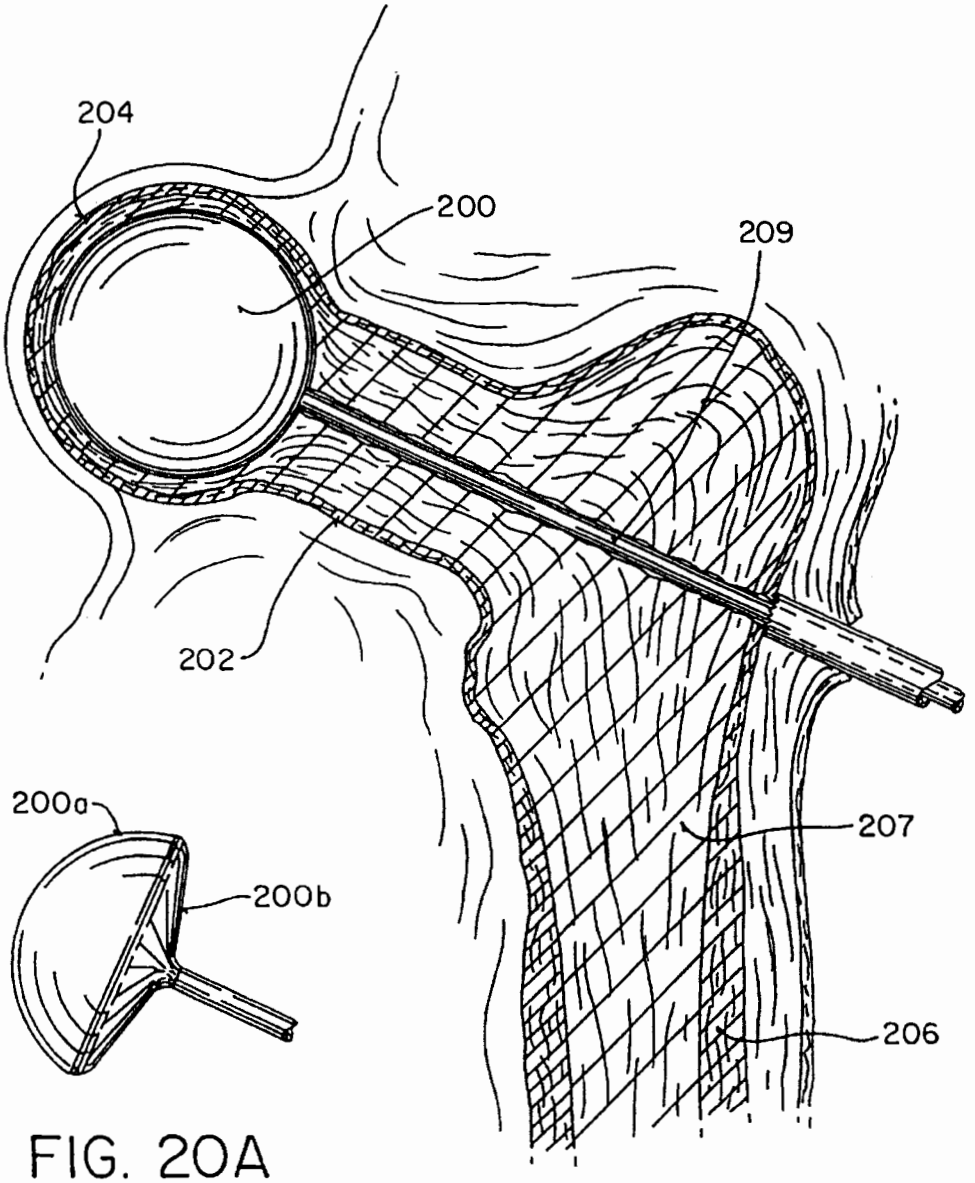

FIG. 20

FIG. 20A

INFLATABLE DEVICE FOR USE IN SURGICAL PROTOCOL RELATING TO FIXATION OF BONE

This is a continuation of application Ser. No. 08/188,224 filed on Jan. 26, 1994, now abandoned.

This invention relates to improvements in the surgical treatment of bone conditions of the human and other animal bone systems and, more particularly, to an inflatable balloon-like device for use in treating such bone conditions. Osteoporosis, avascular necrosis and bone cancer are diseases of bone that predispose the bone to fracture or collapse. There are 2 million fractures each year in the United States, of which about 1.3 million are caused by osteoporosis. Avascular necrosis and bone cancers are more rare but can cause bone problems that are currently poorly addressed.

BACKGROUND OF THE INVENTION

In U.S. Pat. Nos. 4,969,888 and 5,108,404, an apparatus and method are disclosed for the fixation of fractures or other conditions of human and other animal bone systems, both osteoporotic and non-osteoporotic. The apparatus and method are especially suitable for use in the fixation of, but not limited to, vertebral body compression fractures, Colles fractures and fractures of the proximal humerus.

The method disclosed in these two patents includes a series of steps which a surgeon or health care provider can perform to form a cavity in pathological bone (including but not limited to osteoporotic bone, osteoporotic fractured metaphyseal and epiphyseal bone, osteoporotic vertebral bodies, fractured osteoporotic vertebral bodies, fractures of vertebral bodies due to tumors especially round cell tumors, avascular necrosis of the epiphyses of long bones, especially avascular necrosis of the proximal femur, distal femur and proximal humerus and defects arising from endocrine conditions).

The method further includes an incision in the skin (usually one incision, but a second small incision may also be required if a suction egress is used) followed by the placement of a guide pin which is passed through the soft tissue down to and into the bone.

The method further includes drilling the bone to be treated to form a cavity or passage in the bone, following which an inflatable balloon-like device is inserted into the cavity or passage and inflated. The inflation of the inflatable device causes a compacting of the cancellous bone and bone marrow against the inner surface of the cortical wall of the bone to further enlarge the cavity or passage. The inflatable device is then deflated and then is completely removed from the bone. A smaller inflatable device (a starter balloon) can be used initially, if needed, to initiate the compacting of the bone marrow and to commence the formation of the cavity or passage in the cancellous bone and marrow. After this has occurred, a larger, inflatable device is inserted into the cavity or passage to further compact the bone marrow in all directions.

A flowable biocompatible filling material, such as methylmethacrylate cement or a synthetic bone substitute, is then directed into the cavity or passage and allowed to set to a hardened condition to provide structural support for the bone. Following this latter step, the insertion instruments are removed from the body and the incision in the skin is covered with a bandage.

While the apparatus and method of the above patents provide an adequate protocol for the fixation of bone, it has been found that the compacting of the bone marrow and/or the trabecular bone and/or cancellous bone against the inner surface of the cortical wall of the bone to be treated can be significantly improved with the use of inflatable devices that incorporate additional engineering features not heretofore described and not properly controlled with prior inflatable devices in such patents. A need has therefore arisen for improvements in the shape, construction and size of inflatable devices for use with the foregoing apparatus and method, and the present invention satisfies such need.

Prior Techniques for the Manufacture of Balloons for In-Patient Use

A review of the prior art relating to the manufacture of balloons shows that a fair amount of background information has been amassed in the formation of guiding catheters which are introduced into cardiovascular systems of patients through the brachial or femoral arteries. However, there is a scarcity of disclosures relating to inflatable devices used in bone, and none for compacting bone marrow in vertebral bodies and long bones.

In a dilatation catheter, the catheter is advanced into a patient until a balloon is properly positioned across a lesion to be treated. The balloon is inflated with a radiopaque liquid at pressures above four atmospheres to compress the plaque of the lesion to thereby dilate the lumen of the artery. The balloon can then be deflated, then removed from the artery so that the blood flow can be restored through the dilated artery.

A discussion of such catheter usage technique is found and clearly disclosed in U.S. Pat. No. 5,163,989. Other details of angioplasty catheter procedures, and details of balloons used in such procedures can be found in U.S. Pat. Nos. 4,323,071, 4,332,254, 4,439,185, 4,168,224, 4,516,672, 4,538,622, 4,554,929, and 4,616,652.

Extrusions have also been made to form prism shaped balloons using molds which require very accurate machining of the interior surface thereof to form acceptable balloons for angioplastic catheters. However, this technique of extrusion forms parting lines in the balloon product which parting lines are limiting in the sense of providing a weak wall for the balloon itself.

U.S. Pat. No. 5,163,989 discloses a mold and technique for molding dilatation catheters in which the balloon of the catheter is free of parting lines. The technique involves inflating a plastic member of tubular shape so as to press it against the inner molding surface which is heated. Inflatable devices are molded into the desired size and shape, then cooled and deflated to remove it from the mold. The patent states that, while the balloon of the present invention is especially suitable for forming prism-like balloons, it can also be used for forming balloons of a wide variety of sizes and shapes.

A particular improvement in the catheter art with respect to this patent, namely U.S. Pat. No. 4,706,670, is the use of a coaxial catheter with inner and outer tubing formed and reinforced by continuous helical filaments. Such filaments cross each other causing the shaft of the balloon to become shorter in length while the moving portion of the shank becomes longer in length. By suitably balancing the lengths and the angle of the weave of the balloon and moving portions of the filaments, changes in length can be made to offset each other. Thus, the position of the inner and outer tubing can be adjusted as needed to keep the balloon in a desired position in the blood vessel.

Other disclosures relating to the insertion of inflatable devices for treating the skeleton of patients include the following:

U.S. Pat. No. 4,313,434 relates to the fixation of a long bone by inserting a deflated flexible bladder into a medullary

cavity, inflating the balloon bladder, sealing the interior of the long bone until healing has occurred, then removing the bladder and filling the opening through which the bladder emerges from the long bone.

U.S. Pat. No. 5,102,413 discloses the way in which an inflatable bladder is used to anchor a metal rod for the fixation of a fractured long bone.

Other references which disclose the use of balloons and cement for anchoring of a prosthesis include U.S. Pat. Nos. 5,147,366, 4,892,550, 4,697,584, 4,562,598, and 4,399,814.

A Dutch patent, NL 901858, discloses a means for fracture repair with a cement-impregnated bag which is inflated into a preformed cavity and allowed to harden.

It can be concluded from the foregoing review of the prior art that there is little or no substantive information on inflatable devices used to create cavities in bone. It does not teach the shape of the balloon which creates a cavity that best supports the bone when appropriately filled. It does not teach how to prevent balloons from being spherical when inflated, when this is desired. Current medical balloons can compress bone but are too small and generally have the wrong configuration and are generally not strong enough to accomplish adequate cavity formation in either the vertebral bodies or long bones of the body.

U.S. Pat. Nos. 4,969,888 and 5,108,404 disclose a checker-shaped balloon for compressing cancellous bone, but does not provide information on how this balloon remains in its shape when inflated.

Thus, the need continues for an improved inflatable device for use with pathological bones and the treatment thereof.

SUMMARY OF THE INVENTION

The present invention is directed to a balloon-like inflatable device or balloon for use in carrying out the apparatus and method of the above-mentioned U.S. Pat. Nos. 4,969,888 and 5,108,404. Such inflatable devices, hereinafter sometimes referred to as balloons, have shapes for compressing cancellous bone and marrow (also known as medullary bone or trabecular bone) against the inner cortex of bones whether the bones are fractured or not.

In particular, the present invention is directed to a balloon for use in treating a bone predisposed to fracture or to collapse. The balloon comprises an inflatable, non-expandable balloon body for insertion into said bone. The body has a predetermined shape and size when substantially inflated sufficient to compress at least a portion of the inner cancellous bone to create a cavity in the cancellous bone and to restore the original position of the outer cortical bone, if fractured or collapsed. The balloon body is restrained to create said predetermined shape and size so that the fully inflated balloon body is prevented from applying substantial pressure to the inner surface of the outer cortical bone if said bone is unfractured or uncollapsed.

In addition to the shape of the inflatable device itself, another aspect of importance is the construction of the wall or walls of the balloon such that proper inflation the balloon body is achieved to provide for optimum compression of all the bone marrow. The material of the balloon is also desirably chosen so as to be able to fold the balloon so that it can be inserted quickly and easily into a bone using a guide pin and a cannula, yet can also withstand high pressures when inflated. The balloon can also include optional ridges or indentations which are left in the cavity after the balloon has been removed, to enhance the stability of the filler. Also, the inflatable device can be made to have an optional, built-in suction catheter. This is used to remove any fat or fluid extruded from the bone during balloon inflation in the bone. Also, the balloon body can be protected from puncture by the cortical bone or canula by being covered while inside the canula with an optional protective sleeve of suitable material, such as Kevlar or PET or other polymer or substance that can protect the balloon. The main purpose of the inflatable device, therefore, is the forming or enlarging of a cavity or passage in a bone, especially in, but not limited to, vertebral bodies.

The primary object of the present invention is to provide an improved balloon-like inflatable device for use in carrying out a surgical protocol of cavity formation in bones to enhance the efficiency of the protocol, to minimize the time prior to performing the surgery for which the protocol is designed and to improve the clinical outcome. These balloons approximate the inner shape of the bone they are inside of in order to maximally compress cancellous bone. They have additional design elements to achieve specific clinical goals. Preferably, they are made of inelastic material and kept in their defined configurations when inflated, by various restraints, including (but not limited to) use of inelastic materials in the balloon body, seams in the balloon body created by bonding or fusing separate pieces of material together, or by fusing or bonding together opposing sides of the balloon body, woven material bonded inside or outside the balloon body, strings or bands placed at selected points in the balloon body, and stacking balloons of similar or different sizes or shapes on top of each other by gluing or by heat fusing them together. Optional ridges or indentations created by the foregoing structures, or added on by bonding additional material, increases stability of the filler. Optional suction devices, preferably placed so that if at least one hole is in the lowest point of the cavity being formed, will allow the cavity to be cleaned before filling.

Among the various embodiments of the present invention are the following:

1. A doughnut (or torus) shaped balloon with an optional built-in suction catheter to remove fat and other products extruded during balloon expansion.

2. A balloon with a spherical outer shape surrounded by a ring-shaped balloon segment for body cavity formation.

3. A balloon which is kidney bean shaped in configuration. Such a balloon can be constructed in a single layer, or several layers stacked on top of each other.

4. A spherically shaped balloon approximating the size of the head of the femur (i.e. the proximal femoral epiphysis). Such a balloon can also be a hemisphere.

5. A balloon in the shape of a humpbacked banana or a modified pyramid shape approximating the configuration of the distal end of the radius (i.e. the distal radial epiphysis and metaphysis).

6. A balloon in the shape of a cylindrical ellipse to approximate the configuration of either the medial half or the lateral half of the proximal tibial epiphysis. Such a balloon can also be constructed to approximate the configuration of both halves of the proximal tibial epiphysis.

7. A balloon in the shape of sphere on a base to approximate the shape of the proximal humeral epiphysis and metaphysis with a plug to compress cancellous bone into the diaphysis, sealing it off.

8. A balloon device with optional suction device.

9. Protective sheaths to act as puncture guard members optionally covering each balloon inside its catheter.

The present invention, therefore, provides improved, inflatable devices for creating or enlarging a cavity or

passage in a bone wherein the devices are inserted into the bone. The configuration of each device is defined by the surrounding cortical bone and adjacent internal structures, and is designed to occupy about 70–90% of the volume of the inside of the bone, although balloons that are as small as about 40% and as large as about 99% are workable for fractures. In certain cases, usually avascular necrosis, the balloon size may be as small as 10% of the cancellous bone volume of the area of bone being treated, due to the localized nature of the fracture or collapse. The fully expanded size and shape of the balloon is limited by additional material in selected portions of the balloon body whose extra thickness creates a restraint as well as by either internal or external restraints formed in the device including, but not limited to, mesh work, a winding or spooling of material laminated to portions of the balloon body, continuous or non-continuous strings across the inside held in place at specific locations by glue inside or by threading them through to the outside and seams in the balloon body created by bonding two pieces of body together or by bonding opposing sides of a body through glue or heat. Spherical portions of balloons may be restrained by using inelastic materials in the construction of the balloon body, or may be additionally restrained as just described. The material of the balloon is preferably a non-elastic material, such as polyethylene tetraphthalate (PET), Kevlar or other patented medical balloon materials. It can also be made of semi-elastic materials, such as silicone or elastic material such as latex, if appropriate restraints are incorporated. The restraints can be made of a flexible, inelastic high tensile strength material including, but not limited, to those described in U.S. Pat. No. 4,706,670. The thickness of the balloon wall is typically in the range of $^{3}/_{1000}$ths to $^{25}/_{1000}$ths of an inch, or other thicknesses that can withstand pressures of up to 250–400 psi.

A primary goal of percutaneous vertebral body augmentation of the present invention is to provide a balloon which can create a cavity inside the vertebral body whose configuration is optimal for supporting the bone. Another important goal is to move the top of the vertebral body back into place to retain height where possible, however, both of these objectives must be achieved without fracturing the cortical wall of the vertebral body. This feature could push vertebral bone toward the spinal cord, a condition which is not to be desired.

The present invention satisfies these goals through the design of inflatable devices to be described. Inflating such a device compresses the calcium-containing soft cancellous bone into a thin shell that lines the inside of the hard cortical bone creating a large cavity.

At the same time, the biological components (red blood cells, bone progenitor cells) within the soft bone are pressed out and removed by rinsing during the procedure. The body recreates the shape of the inside of an unfractured vertebral body, but optimally stops at approximately 70 to 90% of the inner volume. The balloons of the present invention are inelastic, so maximally inflating them can only recreate the predetermined shape and size. However, conventional balloons become spherical when inflated. Spherical shapes will not allow the hardened bone cement to support the spine adequately, because they make single points of contact on each vertebral body surface (the equivalent of a circle inside a square, or a sphere inside a cylinder). The balloons of the present invention recreate the flat surfaces of the vertebral body by including restraints that keep the balloon in the desired shape. This maximizes the contacts between the vertebral body surfaces and the bone cement, which strengthens the spine. In addition, the volume of bone cement that fills these cavities creates a thick mantle of cement (4 mm or greater), which is required for appropriate compressive strength. Another useful feature, although not required, are ridges in the balloons which leave their imprint in the lining of compressed cancellous bone. The resulting bone cement "fingers" provide enhanced stability.

The balloons which optimally compress cancellous bone in vertebral bodies are the balloons listed as balloon types 1, 2 and 3 above. These balloons are configured to approximate the shape of the vertebral body. Since the balloon is chosen to occupy 70 to 90% of the inner volume, it will not exert undue pressure on the sides of the vertebral body, thus the vertebral body will not expand beyond its normal size (fractured or unfractured). However, since the balloon has the height of an unfractured vertebral body, it can move the top, which has collapsed, back to its original position.

A primary goal of percutaneous proximal humeral augmentation is to create a cavity inside the proximal humerus whose configuration is optimal for supporting the proximal humerus. Another important goal is to help realign the humeral head with the shaft of the humerus when they are separated by a fracture. Both of these goals must be achieved by exerting pressure primarily on the cancellous bone, and not the cortical bone. Undue pressure against the cortical bone could conceivably cause a worsening of a shoulder fracture by causing cortical bone fractures.

The present invention satisfies these goals through the design of the inflatable devices to be described. Inflating such a device compresses the cancellous bone against the cortical walls of the epiphysis and metaphysis of the proximal humerus thereby creating a cavity. In some cases, depending on the fracture location, the balloon or inflatable device may be used to extend the cavity into the proximal part of the humeral diaphysis.

Due to the design of the "sphere on a stand " balloon (described as number 7 above), the cavity made by this balloon recreates or approximates the shape of the inside cortical wall of the proximal humerus. The approximate volume of the cavity made by the "spherical on a stand balloon" is 70 to 90% that of the proximal humeral epiphysis and metaphysis, primarily, but not necessarily exclusive of, part of the diaphysis. The shape approximates the shape of the humeral head. The "base" is designed to compress the trabecular bone into a "plug" of bone in the distal metaphysis or proximal diaphysis. This plug of bone will prevent the flow of injectable material into the shaft of the humerus, improving the clinical outcome. The sphere can also be used without a base.

A primary goal of percutaneous distal radius augmentation is to create a cavity inside the distal radius whose configuration is optimal for supporting the distal radius. Another important goal is to help fine tune fracture realignment after the fracture has been partially realigned by finger traps. Both of these goals must be achieved by exerting pressure primarily on the cancellous bone and not on the cortical bone. Excessive pressure against the cortical bone could conceivably cause cortical bone fractures, thus worsening the condition.

The present invention satisfies these goals through the design of inflatable devices either already described or to be described.

The design of the "humpbacked banana", or modified pyramid design (as described as number 5 above), approximates the shape of the distal radius and therefore, the cavity made by this balloon approximates the shape of the distal radius as well. The approximate volume of the cavity to be

made by this humpbacked banana shaped balloon is 70 to 90% that of the distal radial epiphysis and metaphysis primarily of, but not necessarily exclusive of, some part of the distal radial diaphysis. Inflating such a device compresses the cancellous bone against the cortical walls of the epiphysis and metaphysis of the distal radius in order to create a cavity. In some cases, depending on the fracture location, the osseous balloon or inflatable device may be used to extend the cavity into the distal part of the radial diaphysis.

A primary goal of percutaneous femoral head (or humeral head) augmentation is to create a cavity inside the femoral head (or humeral head) whose configuration is optimal for supporting the femoral head. Another important goal is to help compress avascular (or aseptic) necrotic bone or support avascular necrotic bone is the femoral head. This goal may include the realignment of avascular bone back into the position it previously occupied in the femoral head in order to improve the spherical shape of the femoral head. These goals must be achieved by exerting pressure primarily on the cancellous bone inside the femoral head.

The present invention satisfied these goals through the design of inflatable devices either already described or to be described.

The design of the spherical osseous balloon (described as balloon type 4 above) approximates the shape of the femoral head and therefore creates a cavity which approximates the shape of the femoral head as well. (It should be noted that the spherical shape of this inflatable device also approximates the shape of the humeral head and would, in fact, be appropriate for cavity formation in this osseous location as well.) Inflating such a device compresses the cancellous bone of the femoral head against its inner cortical walls in order to create a cavity. In some cases, depending upon the extent of the avascular necrosis, a smaller or larger cavity inside the femoral head will be formed. In some cases, if the area of avascular necrosis is small, a small balloon will be utilized which might create a cavity only 10 to 15% of the total volume of the femoral head. If larger areas of the femoral head are involved with the avascular necrosis, then a larger balloon would be utilized which might create a much larger cavity, approaching 80 to 90% of the volume of the femoral head.

The hemispherical balloon approximates the shape of the top half of the femoral (and humeral) head, and provides a means for compacting cancellous bone in an area of avascular necrosis or small fracture without disturbing the rest of the head. This makes it easier to do a future total joint replacement if required.

A primary goal of percutaneous proximal tibial augmentation is to create a cavity inside the proximal tibia whose configuration is optimal for supporting either the medial or lateral tibial plateaus. Another important goal is to help realign the fracture fragments of tibial plateau fractures, particularly those features with fragments depressed below (or inferior to) their usual location. Both of these objectives must be achieved by exerting pressure on primarily the cancellous bone and not the cortical bone. Pressure on the cortical bone could conceivably cause worsening of the tibial plateau fracture.

The present invention satisfies these goals through the design of the inflatable devices to be described. Inflating such a device compresses the cancellous bone against the cortical walls of the medial or lateral tibial plateau in order to create a cavity.

Due to the design of the "elliptical cylinder" balloon (described as balloon type 6 above) the cavity made by this balloon recreates or approximates the shape of the cortical walls of either the medial or lateral tibial plateaus. The approximate volume of the cavity to be made by the appropriate elliptical cylindrical balloon is 50 to 90% of the proximal epiphyseal bone of either the medial half or the lateral half of the tibial.

Other objects of the present invention will become apparent as the following specification progresses, reference being had to the accompanying drawings for an illustration of the invention.

BRIEF DESCRIPTION OF THE DRAWINGS

FIG. **1** is a perspective view of a first embodiment of the balloon of the present invention, the embodiment being in the shape of a stacked doughnut assembly;

FIG. **2** is a vertical section through the balloon of FIG. **1** showing the way in which the doughnut portions of the balloon of FIG. **1**, fit into a cavity of a vertebral body;

FIG. **3** is a schematic view of another embodiment of the balloon of the present invention showing three stacked balloons and string-like restraints for limiting the expansion of the balloon in directions of inflation;

FIG. **4** is a top plan view of a spherical balloon having a cylindrical ring surrounding the balloon;

FIG. **5** is a vertical section through the spherical balloon and ring of FIG. **4**;

FIG. **6** shows an oblong-shaped balloon with a catheter extending into the central portion of the balloon;

FIG. **6A** is a perspective view of the way in which a catheter is arranged relative to the inner tubes for inflating the balloon of FIG. **6**;

FIG. **7** is a suction tube and a contrast injection tube for carrying out the inflation of the balloon and removal of debris caused by expansion from the balloon itself;

FIG. **8** is a vertical section through a balloon after it has been deflated and as it is being inserted into the vertebral body of a human;

FIGS. **9** and **9A** are side elevational views of a cannula showing how the protective sleeve or guard member expands when leaving the cannula;

FIG. **9B** is a vertical section through a vertebral bone into which an access hole has been drilled;

FIG. **10** is a perspective view of another embodiment of the balloon of the present invention formed in the shape of a kidney bean;

FIG. **11** is a perspective view of the vertebral bone showing the kidney shaped balloon of FIG. **10** inserted in the bone and expanded;

FIG. **12** is a top view of a kidney shaped balloon formed of several compartments by a heating element or branding tool;

FIG. **13** is a cross-sectional view taken along line **13—13** of FIG. **12** but with two kidney shaped balloons that have been stacked.

FIG. **14** is a view similar to FIG. **11** but showing the stacked kidney shaped balloon of FIG. **13** in the vertebral bone;

FIG. **15** is a top view of a kidney balloon showing outer tufts holding inner strings in place interconnecting the top and bottom walls of the balloon;

FIG. **16** is a cross sectional view taken along lines **16—16** of FIG. **15**;

FIG. **17A** is a dorsal view of a humpback banana balloon in a right distal radius;

FIG. **17B** is a cross sectional view of FIG. **17A** taken along line **17B—17B** of FIG. **17A**;

FIG. **18** is a spherical balloon with a base in a proximal humerus viewed from the front (anterior) of the left proximal humerus;

FIG. **19A** is the front (anterior) view of the proximal tibia with the elliptical cylinder balloon introduced beneath the medial tibial plateau;

FIG. **19B** is a three quarter view of the balloon of FIG. **19A**;

FIG. **19C** is a side elevational view of the balloon of FIG. **19A**;

FIG. **19D** is a top plan view of the balloon of FIG. **19A**;

FIG. **20** is a spherically shaped balloon for treating avascular necrosis of the head of the femur (or humerus) as seen from the front (anterior) of the left hip; and

FIG. **20A** is a side view of a hemispherically shaped balloon for treating avascular necrosis of the head of the femur (or humerus).

DETAILED DESCRIPTION OF THE PREFERRED EMBODIMENT

Balloons for Vertebral Bodies

A first embodiment of the balloon (FIG. **1**) of the present invention is broadly denoted by the numeral **10** and includes a balloon body **11** having a pair of hollow, inflatable, non-expandable parts **12** and **14** of flexible material, such as PET or Kevlar. Parts **12** and **14** have a suction tube **16** therebetween for drawing fats and other debris by suction into tube **16** for transfer to a remote disposal location. Catheter **16** has one or more suction holes so that suction may be applied to the open end of tube **16** from a suction source (not shown).

The parts **12** and **14** are connected together by an adhesive which can be of any suitable type. Parts **12** and **14** are doughnut-shaped as shown in FIG. **1** and have tubes **18** and **20** which communicate with and extend away from the parts **12** and **14**, respectively, to a source of inflating liquid under pressure (not shown). The liquid can be any sterile biocompatible solution. The liquid inflates the balloon **10**, particularly parts **12** and **14** thereof after the balloon has been inserted in a collapsed condition (FIG. **8**) into a bone to be treated, such as a vertebral bone **22** in FIG. **2**. The above-mentioned U.S. Pat. Nos. 4,969,888 and 5,108,404 disclose the use of a guide pin and cannula for inserting the balloon into bone to be treated when the balloon is deflated and has been inserted into a tube and driven by the catheter into the cortical bone where the balloon is inflated.

FIG. **8** shows a deflated balloon **10** being inserted through a cannula **26** into bone. The balloon in cannula **26** is deflated and is forced through the cannula by exerting manual force on the catheter **21** which extends into a passage **28** extending into the interior of the bone. The catheter is slightly flexible but is sufficiently rigid to allow the balloon to be forced into the interior of the bone where the balloon is then inflated by directing fluid into tube **88** whose outlet ends are coupled to respective parts **12** and **14**.

In use, balloon **10** is initially deflated and, after the bone to be filled with the balloon has been prepared to receive the balloon with drilling, the deflated balloon is forced into the bone in a collapsed condition through cannula **26**. The bone is shown in FIG. **2**. The balloon is oriented preferably in the bone such that it allows minimum pressure to be exerted on the bone marrow and/or cancellous bone if there is no fracture or collapse of the bone. Such pressure will compress the bone marrow and/or cancellous bone against the inner wall of the cortical bone, thereby compacting the bone marrow of the bone to be treated and to further enlarge the cavity in which the bone marrow is to be replaced by a biocompatible, flowable bone material.

The balloon is then inflated to compact the bone marrow and/or cancellous bone in the cavity and, after compaction of the bone marrow and/or cancellous bone, the balloon is deflated and removed from the cavity. While inflation of the balloon and compaction occurs, fats and other debris are sucked out of the space between and around parts **12** and **14** by applying a suction force to catheter tube **16**. Following this, and following the compaction of the bone marrow, the balloon is deflated and pulled out of the cavity by applying a manual pulling force to the catheter tube **21**.

The second embodiment of the inflatable device of the present invention is broadly denoted by the numeral **60** and is shown in FIGS. **4** and **5**. Balloon **60** includes a central spherical part **62** which is hollow and which receives an inflating liquid under pressure through a tube **64**. The spherical part is provided with a spherical outer surface **66** and has an outer periphery which is surrounded substantially by a ring shaped part **68** having tube segments **70** for inflation of part **68**. A pair of passages **69** interconnect parts **62** and **68**. A suction tube segment **72** draws liquid and debris from the bone cavity being formed by the balloon **60**.

Provision can be made for a balloon sleeve **71** for balloon **60** and for all balloons disclosed herein. A balloon sleeve **71** (FIG. **9**) is shiftably mounted in an outer tube **71***a* and can be used to insert the balloon **60** when deflated into a cortical bone. The sleeve **71** has resilient fingers **71***b* which bear against the interior of the entrance opening **71***c* of the vertebral bone **22** (FIG. **9A**) to prevent tearing of the balloon. Upon removal of the balloon sleeve, liquid under pressure will be directed into tube **64** which will inflate parts **62** and **68** so as to compact the bone marrow within the cortical bone. Following this, balloon **60** is deflated and removed from the bone cavity.

FIGS. **6** and **6A** show several views of a modified doughnut shape balloon **80** of the type shown in FIGS. **1** and **2**, except the doughnut shapes of balloon **80** are not stitched onto one another. In FIG. **6**, balloon **80** has a pear-shaped outer convex surface **82** which is made up of a first hollow part **84** and a second hollow part **85**. A tube **88** is provided for directing liquid into the two parts along branches **90** and **92** to inflate the parts after the parts have been inserted into the medullary cavity of a bone. A catheter tube **16** is inserted into the space **96** between two parts of the balloon **80**. An adhesive bonds the two parts **84** and **85** together at the interface thereof.

FIG. **6A** shows the way in which the catheter tube **16** is inserted into the space or opening **96** between the two parts of the balloon **80**.

FIG. **7** shows tube **88** of which, after directing inflating liquid into the balloon **80**, can inject contrast material into the balloon **80** so that x-rays can be taken of the balloon with the inflating material therewithin to determine the proper placement of the balloon. Tube **16** is also shown in FIG. **6**, it being attached in some suitable manner to the outer side wall surface of tube **88**.

Still another embodiment of the invention is shown in FIG. **3** which is similar to FIG. **1** except that it is round and not a doughnut and includes an inflatable device **109** having three balloon units **110**, **112** and **114** which are inflatable and which have string-like restraints **117** which limit the expansion of the balloon units in a direction transverse to the longitudinal axes of the balloon units. The restraints are made of the same or similar material as that of the balloon

so that they have some resilience but substantially no expansion capability.

A tube system **115** is provided to direct liquid under pressure into balloon units **110**, **112** and **114** so that liquid can be used to inflate the balloon units when placed inside the bone in a deflated state. Following the proper inflation and compaction of the bone marrow, the balloon can be removed by deflating it and pulling it outwardly of the bone being treated. The restraints keep the opposed sides **77** and **79** substantially flat and parallel with each other.

In FIG. **10**, another embodiment of the inflatable balloon is shown. The device is a kidney shaped balloon body **130** having a pair of opposed kidney shaped side walls **132** which are adapted to be collapsed and to cooperate with a continuous end wall **134** so that the balloon **130** can be forced into a bone **136** shown in FIG. **11**. A tube **138** is used to direct inflating liquid into the balloon to inflate the balloon and cause it to assume the dimensions and location shown vertebral body **136** in FIG. **11**. Device **130** will compress the cancellous bone if there is no fracture or collapse of the cancellous bone. The restraints for this action are due to the side and end walls of the balloon.

FIG. **12** shows a balloon **140** which is also kidney shaped and has a tube **142** for directing an inflatable liquid into the tube for inflating the balloon. The balloon is initially a single chamber bladder but the bladder can be branded along curved lines or strips **141** to form attachment lines **144** which take the shape of side-by-side compartments **146** which are kidney shaped as shown in FIG. **13**. The branding causes a welding of the two sides of the bladder to occur since the material is standard medical balloon material, which is similar to plastic and can be formed by heat.

FIG. **14** is a perspective view of a vertebral body **147** containing the balloon of FIG. **12**, showing a double stacked balloon **140** when it is inserted in vertebral bone **147**.

FIG. **15** is a view similar to FIG. **10** except that tufts **155**, which are string-like restraints, extend between and are connected to the side walls **152** of inflatable device **150** and limit the expansion of the side walls with respect to each other, thus rendering the side walls generally parallel with each other. Tube **88** is used to fill the kidney shaped balloon with an inflating liquid in the manner described above.

The dimensions for the vertebral body balloon will vary across a broad range. The heights (H, FIG. **11**) of the vertebral body balloon for both lumbar and thoracic vertebral bodies typically range from 0.5 cm to 3.5 cm. The anterior to posterior (A, FIG. **11**) vertebral body balloon dimensions for both lumbar and thoracic vertebral bodies range from 0.5 cm to 3.5 cm. The side to side (L, FIG. **11**) vertebral body dimensions for thoracic vertebral bodies will range from 0.5 cm to 3.5 cm. The side to side vertebral body dimensions for lumbar vertebral bodies will range from 0.5 cm to 5.0 cm.

The eventual selection of the appropriate balloon for, for instance, a given vertebral body is based upon several factors. The anterior-posterior (A-P) balloon dimension for a given vertebral body is selected from the CT scan or plain film x-ray views of the vertebral body. The A-P dimension is measured from the internal cortical wall of the anterior cortex to the internal cortical wall of the posterior cortex of the vertebral body. In general, the appropriate A-P balloon dimension is 5 to 7 millimeters less than this measurement.

The appropriate side to side balloon dimensions for a given vertebral body is selected from the CT scan or from a plain film x-ray view of the vertebral body to be treated. The side to side distance is measured from the internal cortical walls of the side of the vertebral bone. In general, the appropriate side to side balloon dimension is 5 to 7 millimeters less than this measurement by the addition of the lumbar vertebral body tends to be much wider than side to side dimension then their A-P dimension. In thoracic vertebral bodies, the side to side dimension and their A-P dimensions are almost equal.

The height dimensions of the appropriate vertebral body balloon for a given vertebral body is chosen by the CT scan or x-ray views of the vertebral bodies above and below the vertebral body to be treated. The height of the vertebral bodies above and below the vertebral body to be treated are measured and averaged. This average is used to determine the appropriate height dimension of the chosen vertebral body balloon.

Balloons for Long Bones

Long bones which can be treated with the use of balloons of the present invention include distal radius (larger arm bone at the wrist), proximal tibial plateau (leg bone just below the knee), proximal humerus (upper end of the arm at the shoulder), and proximal femoral head (leg bone in the hip).

Distal Radius Balloon

For the distal radius, a balloon **160** is shown in the distal radius **152** and the balloon has a shape which approximates a pyramid but more closely can be considered the shape of a humpbacked banana in that it substantially fills the interior of the space of the distal radius to force cancellous bone **154** lightly against the inner surface **156** of cortical bone **158**.

The balloon **160** has a lower, conical portion **159** which extends downwardly into the hollow space of the distal radius **152**, and this conical portion **159** increases in cross section as a central distal portion **161** is approached. The cross section of the balloon **160** is shown at a central location (FIG. **17**B) and this location is near the widest location of the balloon. The upper end of the balloon, denoted by the numeral **162**, converges to the catheter **88** for directing a liquid into the balloon for inflating the same to force the cancellous bone against the inner surface of the cortical bone. The shape of the balloon **160** is determined and restrained by tufts formed by string restraints **165**. These restraints are optional and provide additional strength to the balloon body **160**, but are not required to achieve the desired configuration. The balloon is placed into and taken out of the distal radius in the same manner as that described above with respect to the vertebral bone.

The dimensions of the distal radius balloon vary as follows:

- The proximal end of the balloon (i.e. the part nearest the elbow) is cylindrical in shape and will vary from 0.5×0.5 cm to 1.8×1.8 cm.
- The length of the distal radius balloon will vary from 1.0 cm to 12.0 cm.
- The widest medial to lateral dimension of the distal radius balloon, which occurs at or near the distal radio-ulnar joint, will measure from 1.0 cm to 2.5 cm.
- The distal anterior-posterior dimension of the distal radius balloon will vary from 0.5 to 3.0 cm.

Proximal Humerus Fracture Balloon

The selection of the appropriate balloon size to treat a given fracture of the distal radius will depend on the radiological size of the distal radius and the location of the fracture.

In the case of the proximal humerus **169**, a balloon **166** shown in FIG. **18** is spherical and has a base design. It compacts the cancellous bone **168** in a proximal humerus **169**. A mesh **170**, embedded or laminated and/or winding, may be used to form a neck **172** on the balloon **166**, and

second mesh **170***a* may be used to conform the bottom of the base **172***a* to the shape of the inner cortical wall at the start of the shaft. These restraints provide additional strength to the balloon body, but the configuration can be achieved through molding of the balloon body. This is so that the cancellous bone will be as shown in the compacted region surrounding the balloon **166** as shown in FIG. **18**. The cortical bone **173** is relatively wide at the base **174** and is thin-walled at the upper end **175**. The balloon **166** has a feed tube **177** into which liquid under pressure is forced into the balloon to inflate it to lightly compact the cancellous bone in the proximal humerus. The balloon is inserted into and taken out of the proximal humerus in the same manner as that described above with respect to the vertebral bone.

The dimensions of the proximal humerus fracture balloon vary as follows:

- The spherical end of the balloon will vary from 1.0×1.0 cm to 3.0×3.0 cm.
- The neck of the proximal humeral fracture balloon will vary from 0.8×0.8 cm to 3.0×3.0 cm.
- The width of the base portion or distal portion of the proximal numeral fracture balloon will vary from 0.5×0.5 cm to 2.5×2.5 cm.
- The length of the balloon will vary from 4.0 cm to 14.0 cm.
- The selection of the appropriate balloon to treat a given proximal humeral fracture depends on the radiologic size of the proximal humerus and the location of the fracture.

Proximal Tibial Plateau Fracture Balloon

The tibial fracture is shown in FIG. **19**A in which a balloon **180** is placed in one side **182** of a tibia **183**. The balloon, when inflated, compacts the cancellous bone in the layer **184** surrounding the balloon **180**. A cross section of the balloon is shown in FIG. **19**C wherein the balloon has a pair of opposed sides **185** and **187** which are interconnected by restraints **188** which can be in the form of strings or flexible members of any suitable construction. The main purpose of the restraints is to make the sides **185** and **187** substantially parallel with each other and non-spherical. A tube **190** is coupled to the balloon **180** to direct liquid into and out of the balloon. The ends of the restraints are shown in FIGS. **19**B and **19**D and denoted by the numeral **191**. The balloon is inserted into and taken out of the tibia in the same manner as that described above with respect to the vertebral bone. FIG. **19**B shows a substantially circular configuration for the balloon; whereas, FIG. **19**D shows a substantially elliptical version of the balloon.

The dimensions of the proximal tibial plateau fracture balloon vary as follows:

- The thickness or height of the balloon will vary from 0.5 cm to 5.0 cm.
- The anterior/posterior (front to back) dimension will vary from 1.0 cm to 6.0 cm.
- The side to side (medial to lateral) dimension will vary from 1.0 cm to 6.0 cm.
- The selection of the appropriate balloon to treat a given tibial plateau fracture will depend on the radiological size of the proximal tibial and the location of the fracture.

Femoral Head Balloon

In the case of the femoral head, a balloon **200** is shown as having been inserted inside the cortical bone **202** of the femoral head which is thin at the outer end **204** of the femur and which can increase in thickness at the lower end **206** of the femur. The cortical bone surrounds the cancellous bone **207** and this bone is compacted by the inflation of balloon **200**. The tube for directing liquid for inflation purposes into the balloon is denoted by the numeral **209**. It extends along the femoral neck and is directed into the femoral head which is generally spherical in configuration. FIG. **20**A shows that the balloon, denoted by the numeral **200***a*, can be hemispherical as well as spherical, as shown in FIG. **20**. The balloon **200** is inserted into and taken out of the femoral head in the same manner as that described with respect to the vertebral bone. The hemispherical shape is maintained in this example by bonding overlapping portions of the bottom, creating pleats **200***b* as shown in FIG. **20**A.

The dimensions of the femoral head balloon vary as follows:

- The diameter of the femoral head balloon will vary from 1.0 cm to up to 4.5 cm. The appropriate size of the femoral head balloon to be chosen depends on the radiological or CT scan size of the head of the femur and the location and size of the avascular necrotic bone. The dimensions of the hemispherical balloon are the same as the those of the spherical balloon, except that approximately one half is provided.

What is claimed is:

1. A method for treating bone comprising the steps of

inserting inside bone a device comprising a body adapted to be inserted into bone and undergo expansion in cancellous bone to compact cancellous bone, the body including material that, during the expansion in cancellous bone, applies a force capable of moving fractured cortical bone, and further includes changes in thickness of the body to constrain the expansion in cancellous bone,

causing constrained expansion of the body in cancellous bone, and

compacting cancellous bone by the constrained expansion.

2. A method for treating bone comprising the steps of

inserting inside bone a device comprising a body adapted to be inserted into bone and undergo expansion in cancellous bone to compact cancellous bone, including the body includes material that, during the expansion in cancellous bone, applies a force capable of moving fractured cortical bone, and further includes an internal restraint coupled to an interior of the body to constrain the expansion in cancellous bone,

causing constrained expansion of the body in cancellous bone, and compacting cancellous bone by the constrained expansion.

3. A method according to claim **2**

wherein the internal restraint includes mesh material.

4. A method according to claim **2**

wherein the internal restraint includes string material.

5. A method according to claim **2**

wherein the internal restraint includes a woven material.

6. A method according to claim **2**

wherein the internal restraint includes a seam.

7. A method according to claim **2**

wherein the internal restraint includes an essentially non-elastic material.

8. A method for treating bone comprising the steps of

inserting inside bone a device comprising a body adapted to be inserted into bone and undergo expansion in cancellous bone to compact cancellous bone, the body including material that, during the expansion in cancellous bone, applies a force capable of moving frac-

tured cortical bone, and further includes an external restraint coupled to an exterior of the body to constrain the expansion in cancellous bone,

causing constrained expansion of the body in cancellous bone, and

compacting cancellous bone by the constrained expansion.

9. A method according to claim **8**

wherein the external restraint includes mesh material.

10. A method according to claim **8**

wherein the external restraint includes string material.

11. A device according to claim **8**

wherein the external restraint includes a woven material.

12. A method according to claim **8**

wherein the external restraint includes a seam.

13. A device according to claim **8**

wherein the external restraint includes an essentially non-elastic material.

14. A method according to claim **1** or **2** or **8**

wherein the material includes an essentially non-elastic material.

15. A method according to claim **1** or **2** or **8**

wherein the material includes an essentially semi-elastic material.

16. A method according to claim **1** or **2** or **8**

wherein the material includes an essentially elastic material.

17. A method for treating bone comprising the steps of

inserting inside bone a device comprising a body adapted to be inserted into bone and undergo expansion in cancellous bone to compact cancellous bone, the body including at least two materials that, during the expansion in cancellous bone, apply a force capable of moving fractured cortical bone and constrain the expansion in cancellous bone,

causing constrained expansion of the body in cancellous bone, and

compacting cancellous bone by the constrained expansion.

18. A device according to claim **17**

wherein the at least two materials possess essentially similar elastic properties.

19. A device according to claim **17**

wherein the at least two materials possess essentially different elastic properties.

20. A method according to claim **1** or **2** or **8** or **17**

wherein the constrained expansion lifts vertebral end plates.

21. A method according to claim **1** or **2** or **8** or **17**

wherein the constrained expansion lifts tibial plateau depressions.

22. A method according to claim **1** or **2** or **8** or **17**

wherein the constrained expansion lifts proximal humerus depressions.

23. A method according to claim **1** or **2** or **8** or **17**

wherein the constrained expansion lifts cortical bone.

24. A method according to claim **1** or **2** or **8** or **17**

wherein the step of compacting forms a cavity.

25. A method according to claim **24**

further including the step of filling the cavity with a material.

26. A method according to claim **25**

wherein the material comprises bone cement.

27. A method according to claim **25**

wherein the material comprises synthetic bone substitute.

28. A method according to claim **25**

wherein the material comprises a flowable material that sets to a hardened condition.

* * * * *

U.S. District Court
District of Delaware (Wilmington)
CIVIL DOCKET FOR CASE #: 1:00-cv-00564-JJF

Chase Manhattan v. Iridium Africa Corp., et al
Assigned to: Honorable Joseph J. Farnan, Jr.
Demand: $0
Cause: 28:1332 Diversity-Contract Default

Date Filed: 06/09/2000
Jury Demand: Defendant
Nature of Suit: 190 Contract: Other
Jurisdiction: Diversity

Plaintiff

Chase Manhattan Bank
as Collateral Agent

represented by **Stephen E. Jenkins**
Ashby & Geddes
222 Delaware Avenue
P.O. Box 1150
Wilmington, DE 19899
(302) 654-1888
Email: sjenkins@ashby-geddes.com
LEAD ATTORNEY
ATTORNEY TO BE NOTICED

V.

Defendant

Iridium Africa Corporation

represented by **William J. Marsden, Jr.**
Fish & Richardson, P.C.
919 N. Market Street, Suite 1100
P.O. Box 1114
Wilmington, DE 19899-1114
(302) 652-5070
Email: marsden@fr.com
LEAD ATTORNEY
ATTORNEY TO BE NOTICED

Defendant

Iridium Canada Inc.
TERMINATED: 11/06/2003

represented by **David C. McBride**
Young, Conaway, Stargatt & Taylor
The Brandywine Building
1000 West Street, 17th Floor
P.O. Box 391
Wilmington, DE 19899-0391

(302) 571-6600
Email: dmcbride@ycst.com
TERMINATED: 11/06/2003
LEAD ATTORNEY
ATTORNEY TO BE NOTICED

Defendant

Iridium China (Hong Kong) Ltd.

represented by **Barry M. Klayman**
Wolf, Block, Schorr and Solis-Cohen LLP
Wilmington Trust Center
1100 North Market Street, Suite 1001
Wilmington, DE 19801
(302) 777-0313
Fax: (302) 778-7813
Email: bklayman@wolfblock.com
LEAD ATTORNEY
ATTORNEY TO BE NOTICED

Jesse A. Finkelstein
Richards, Layton & Finger
One Rodney Square
P.O. Box 551
Wilmington, DE 19899
(302) 658-6541
TERMINATED: 04/06/2001
LEAD ATTORNEY
ATTORNEY TO BE NOTICED

Defendant

Iridium India Telecom Limited
TERMINATED: 11/14/2000

Defendant

Iridium Middle East Corporation

represented by **William J. Marsden, Jr.**
(See above for address)
LEAD ATTORNEY
ATTORNEY TO BE NOTICED

Defendant

Iridium SudAmerica

represented by **Francis G.X. Pileggi**

Corporation *TERMINATED: 03/10/2004*		Fox Rothschild LLP 919 North Market Street, Suite 1300 P.O. Box 2323 Wilmington, DE 19899-2323 (302) 654-7444 Email: fpileggi@foxrothschild.com *TERMINATED: 11/27/2001* *LEAD ATTORNEY* *ATTORNEY TO BE NOTICED*

Defendant

Khrunichev State Research and Production Space Center	represented by	**William J. Marsden, Jr.** (See above for address) *LEAD ATTORNEY* *ATTORNEY TO BE NOTICED*

Defendant

Korea Mobile Telecommunications Corporation *TERMINATED: 09/19/2002*	represented by	**Samuel A. Nolen** Richards, Layton & Finger One Rodney Square P.O. Box 551 Wilmington, DE 19899 (302) 658-6541 Email: nolen@rlf.com *TERMINATED: 09/19/2002* *LEAD ATTORNEY* *ATTORNEY TO BE NOTICED*

Defendant

Lockheed Martin Corporation *TERMINATED: 05/02/2002*	represented by	**Samuel A. Nolen** (See above for address) *TERMINATED: 05/02/2002* *LEAD ATTORNEY* *ATTORNEY TO BE NOTICED*

Defendant

Motorola Inc. *TERMINATED: 03/07/2003*	represented by	**Richard K. Herrmann** Morris, James, Hitchens & Williams 222 Delaware Avenue, 10th Floor

		P.O. Box 2306 Wilmington, DE 19899-2306 (302) 888-6800 Email: rherrmann@morrisjames.com *TERMINATED: 03/07/2003* *LEAD ATTORNEY* *ATTORNEY TO BE NOTICED*
Defendant		
Nippon Iridium (Bermuda) Limited	represented by	**Joseph R. Slights, III** Morris, James, Hitchens & Williams 222 Delaware Ave. P.O. Box 2306 Wilmington, DE 19899 (302) 888-6800 *TERMINATED: 10/03/2000* *LEAD ATTORNEY* *ATTORNEY TO BE NOTICED* **P. Clarkson Collins, Jr.** Morris, James, Hitchens & Williams 222 Delaware Ave. P.O. Box 2306 Wilmington, DE 19899 (302) 888-6800 *LEAD ATTORNEY* *ATTORNEY TO BE NOTICED*
Defendant		
Pacific Electric Wire & Cable Co., Ltd.	represented by	**John S. Spadaro** Murphy, Spadaro & Landon 1011 Centre Road Suite 210 Wilmington, DE 19805 (302) 472-8100 Email: jspadaro@msllaw.com *TERMINATED: 09/20/2004* *LEAD ATTORNEY* *ATTORNEY TO BE NOTICED* **Jonathan L. Parshall**

Murphy, Spadaro & Landon
1011 Centre Road
Suite 210
Wilmington, DE 19805
(302) 472-8100
Email: jonp@msllaw.com
LEAD ATTORNEY
ATTORNEY TO BE NOTICED

Defendant

Raytheon Company
TERMINATED: 05/02/2002

represented by **Samuel A. Nolen**
(See above for address)
TERMINATED: 05/02/2002
LEAD ATTORNEY
ATTORNEY TO BE NOTICED

Defendant

Sprint Iridium Inc.

represented by **Victor F. Battaglia, Sr.**
Biggs & Battaglia
921 North Orange Street
P.O. Box 1489
Wilmington, DE 19899
(302) 655-9677
Email: victorsr@batlaw.com
LEAD ATTORNEY
ATTORNEY TO BE NOTICED

Defendant

STET-Societa Finanziaria Telefonica per Azioni
TERMINATED: 03/01/2005

represented by **Samuel A. Nolen**
(See above for address)
LEAD ATTORNEY
ATTORNEY TO BE NOTICED

Defendant

Thai Satellite Telecommunications Co., Ltd.
TERMINATED: 11/14/2000

Defendant

Vebacom Holdings Inc

represented by **Joseph R. Slights, III**

H

US006241734B1

(12) **United States Patent**
Scribner et al.

(10) **Patent No.: US 6,241,734 B1**
(45) **Date of Patent: Jun. 5, 2001**

(54) **SYSTEMS AND METHODS FOR PLACING MATERIALS INTO BONE**

(75) Inventors: **Robert M. Scribner**, Los Altos; **Michael L. Reo**, Redwood City; **Mark A. Reiley**, Piedmont; **Ryan Boucher**, San Francisco, all of CA (US)

(73) Assignee: **Kyphon, Inc.**, Sunnyvale, CA (US)

(*) Notice: Subject to any disclaimer, the term of this patent is extended or adjusted under 35 U.S.C. 154(b) by 0 days.

(21) Appl. No.: **09/134,323**

(22) Filed: **Aug. 14, 1998**

(51) **Int. Cl.**[7] **A61B 17/58**
(52) **U.S. Cl.** **606/93**; 606/94
(58) **Field of Search** 606/93, 92, 94, 606/95, 96, 100, 102, 105, 192, 193.7, 194

(56) **References Cited**

U.S. PATENT DOCUMENTS

4,005,527	*	2/1977	Wilson et al.	33/111
4,919,153		4/1990	Chin .	
5,013,318		5/1991	Spranza, III .	
5,171,248		12/1992	Ellis .	
5,468,245		11/1995	Vargas, III .	
5,514,137	*	5/1996	Coutts	606/62
5,658,310	*	8/1997	Berger	606/192
5,989,260	*	11/1999	Yao	606/102
5,997,581	*	12/1999	Khalili	623/23

* cited by examiner

Primary Examiner—Henry J. Recia
Assistant Examiner—Lien Ngo
(74) *Attorney, Agent, or Firm*—Ryan Kromholz & Manjon, S.C.

(57) **ABSTRACT**

Systems and methods for delivering material into bone deploy a cannula through soft tissue to establish a subcutaneous path into bone. A material is introduced into bone through the cannula. The systems and methods advance a tamping instrument through the cannula to urge material residing in the cannula into bone. The introducing step delivers material at a pressure no greater than about 360 psi.

21 Claims, 19 Drawing Sheets

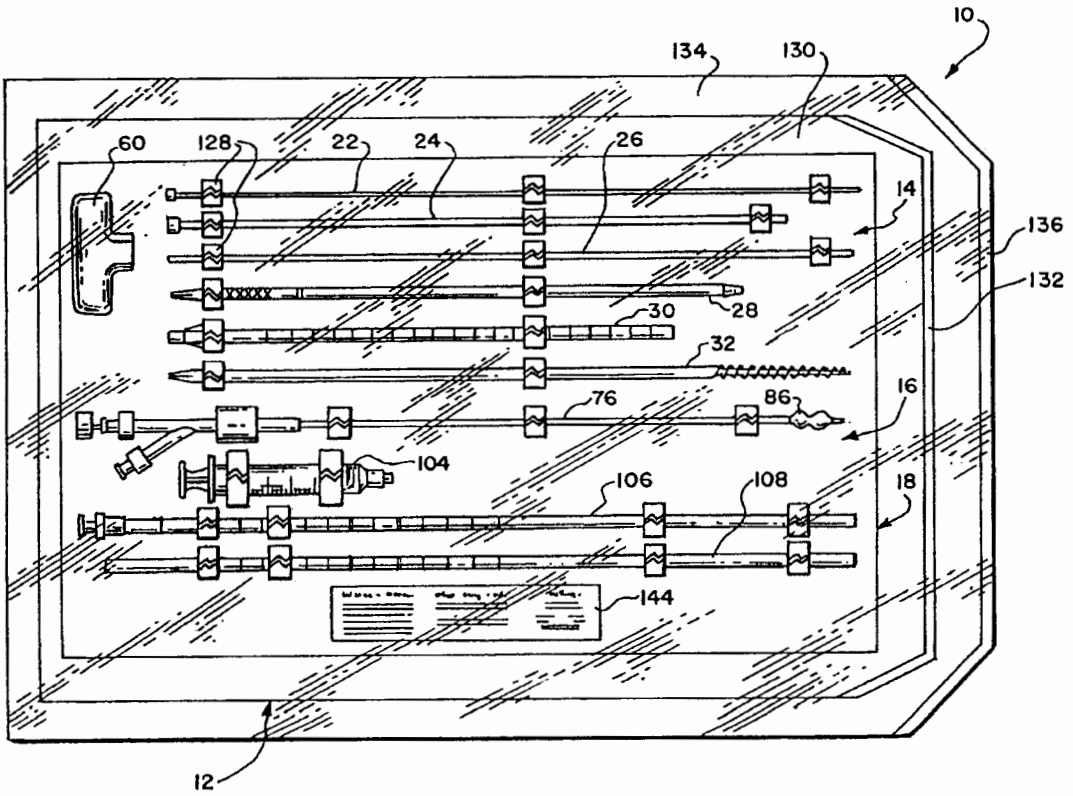

FIG. 1

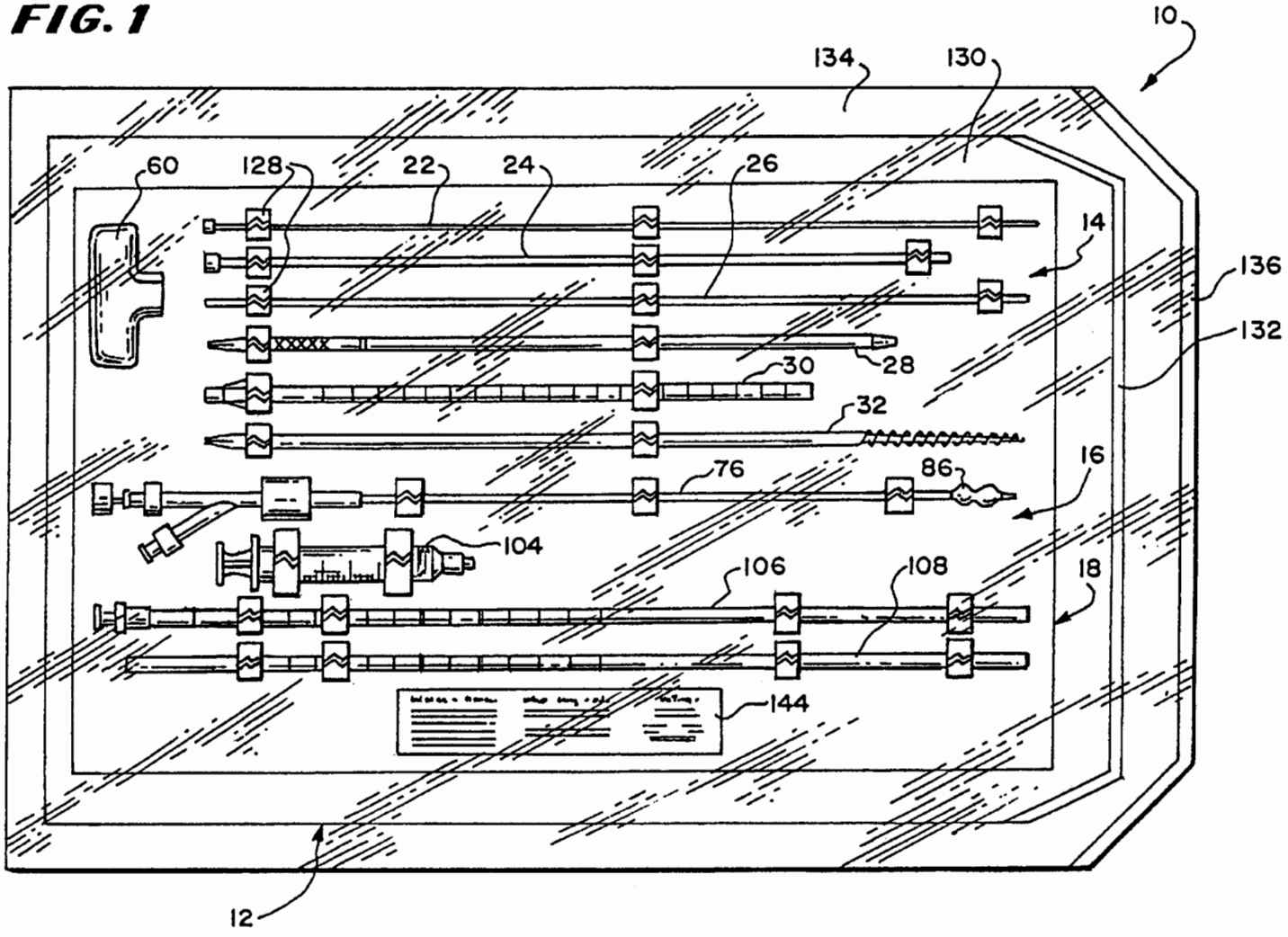
10
134
130
60
128
22
24
26
14
136
132
30
28
32
16
76
86
104
106
108
18
144
12

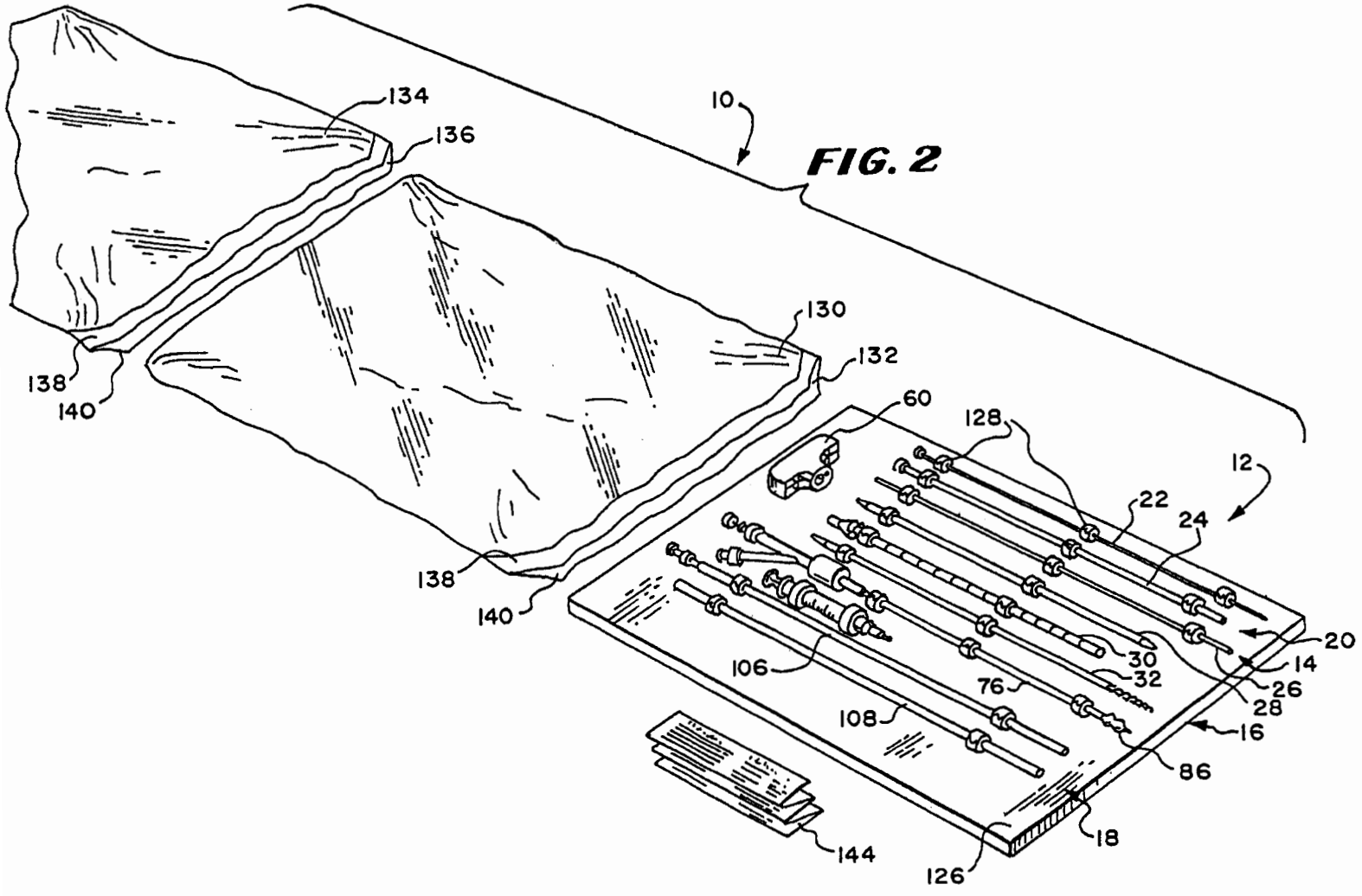
10
134
136
130
132
138
140
60
128
12
22
24
20
14
26
28
16
30
32
76
106
108
86
18
144
126

FIG. 2

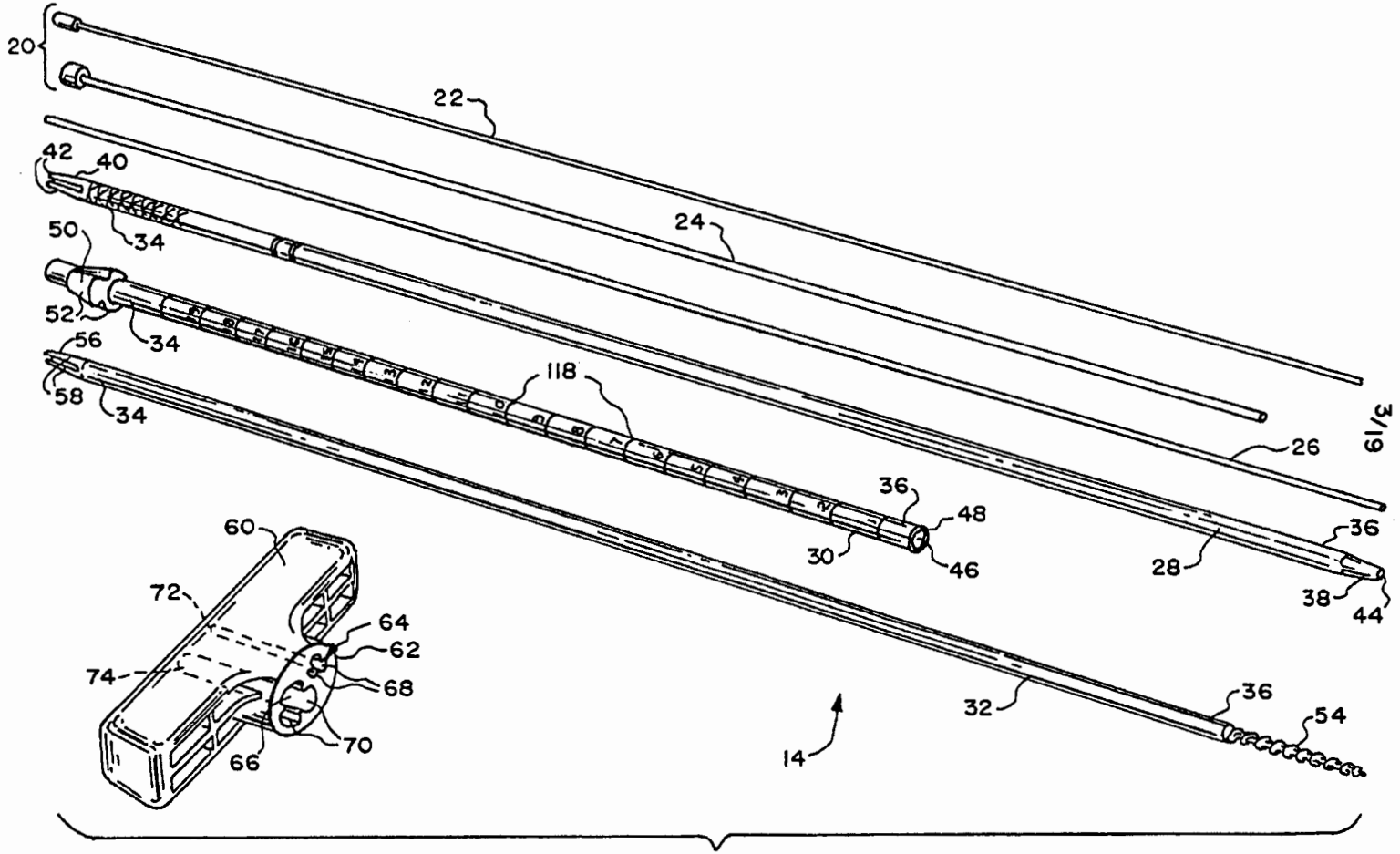
20
22
42
40
34
24
50
52
34
56
58
34
118
26
36
48
30
46
28
36
38
44
60
72
64
62
74
68
70
66
32
36
54
14

FIG. 3

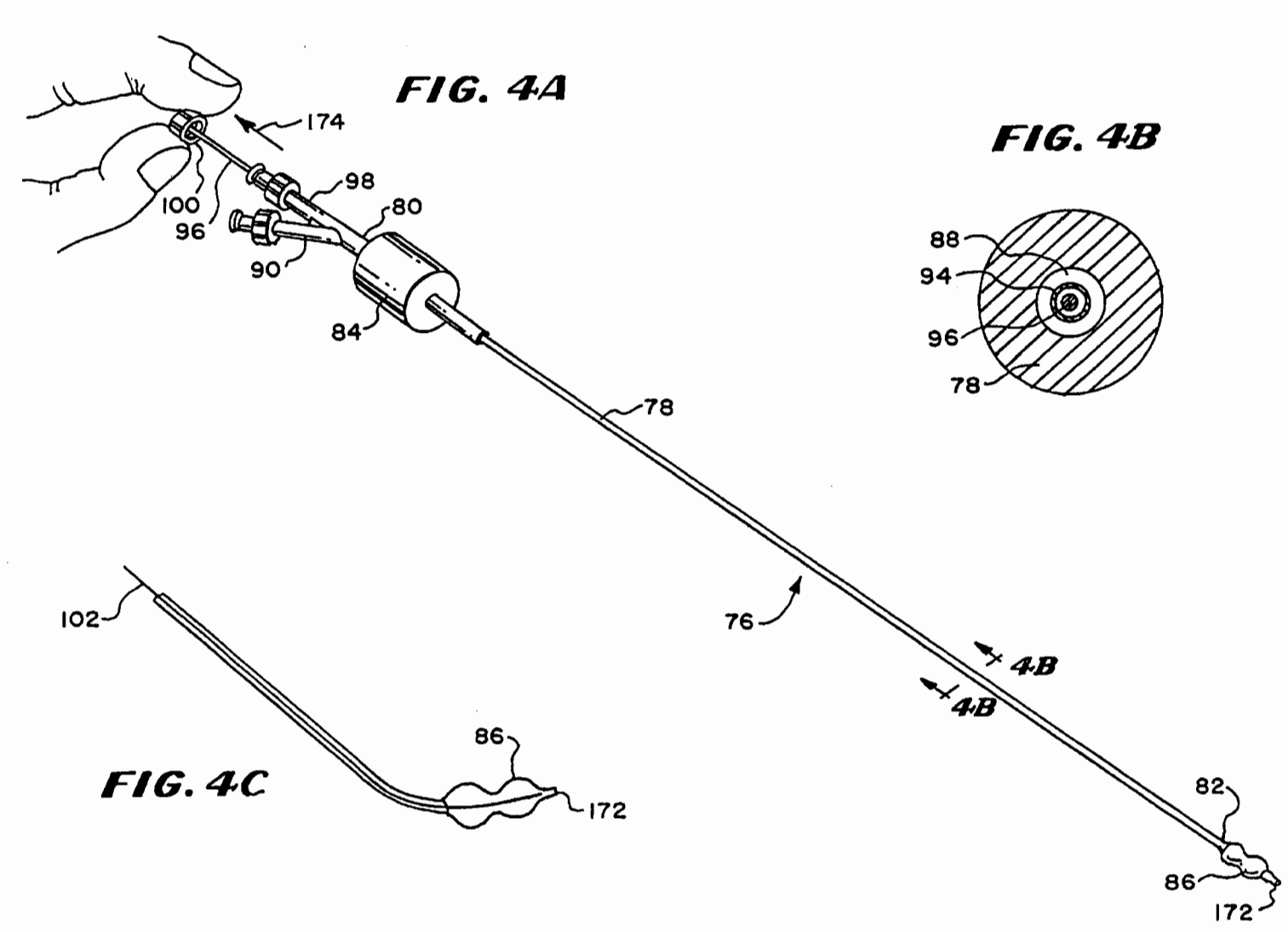

FIG. 4A

FIG. 4B

FIG. 4C

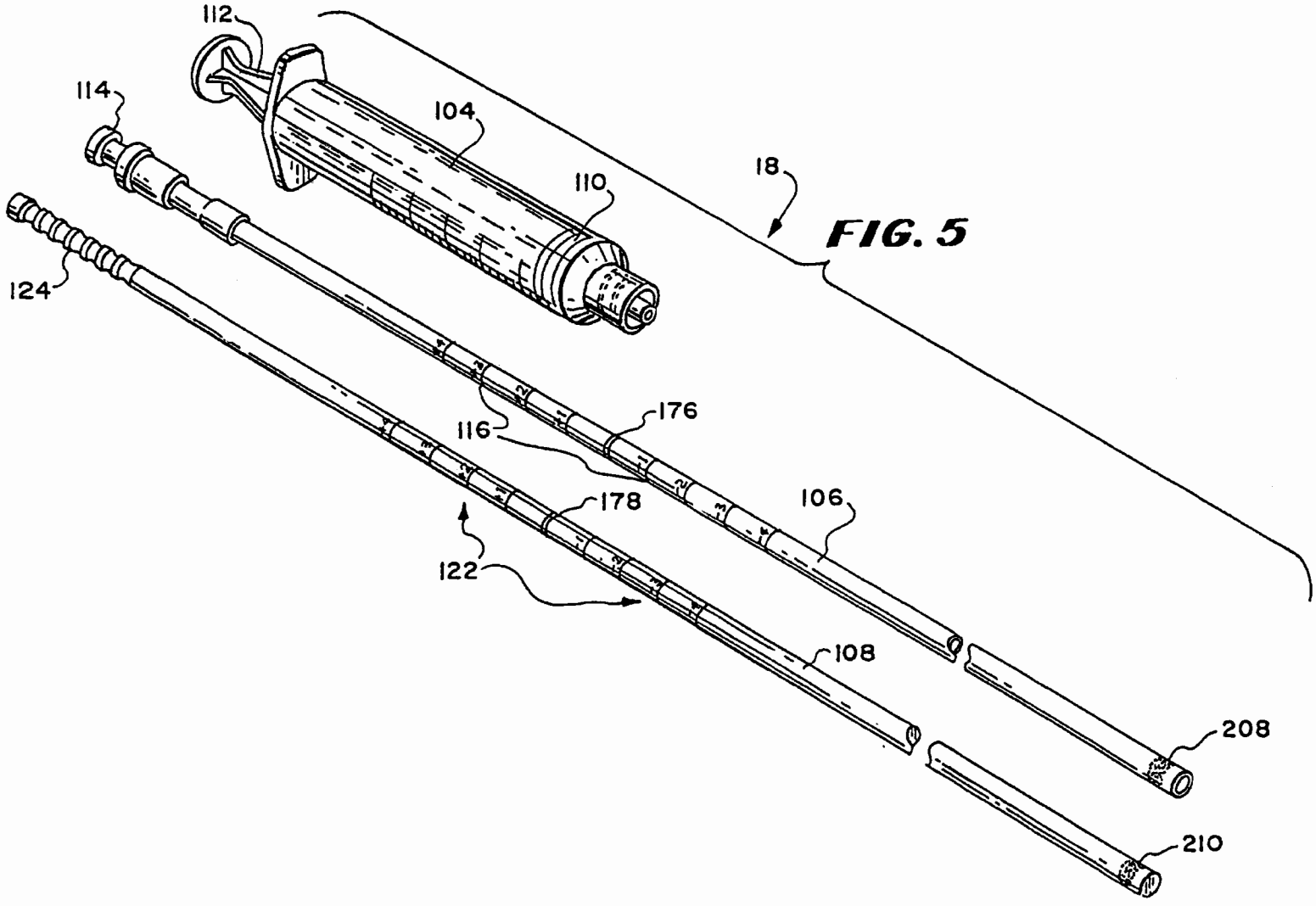

FIG. 5

FIG. 6

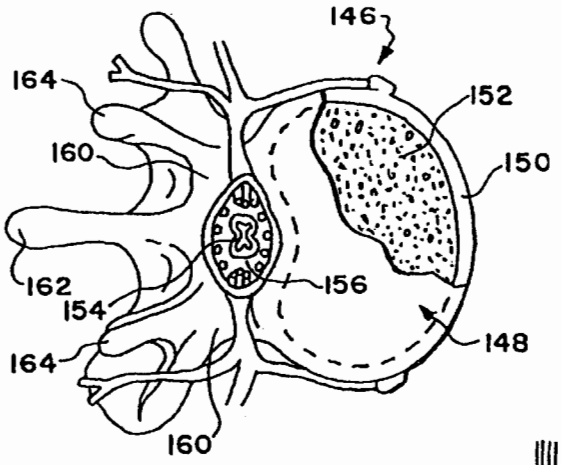

FIG. 7

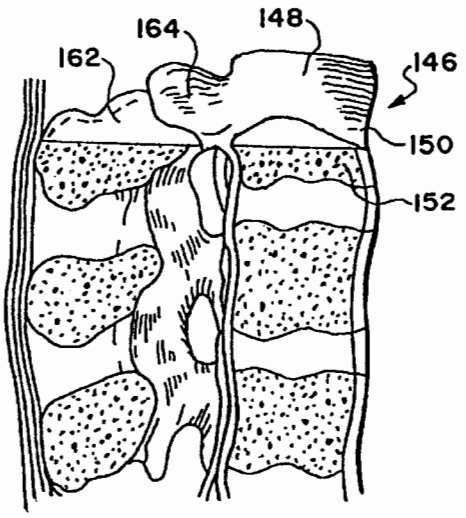

FIG. 8

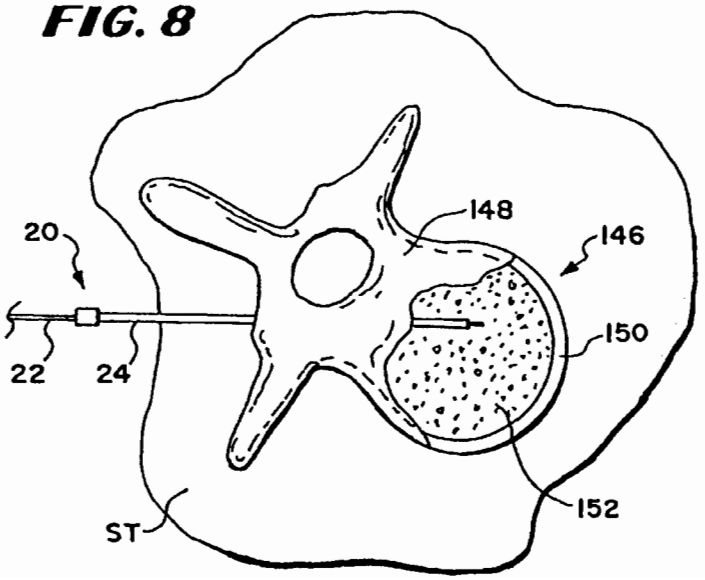

FIG. 9

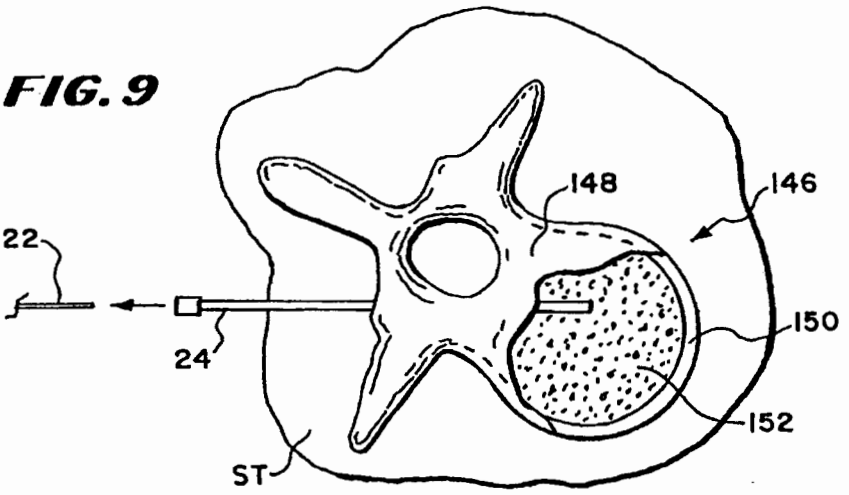

FIG. 10

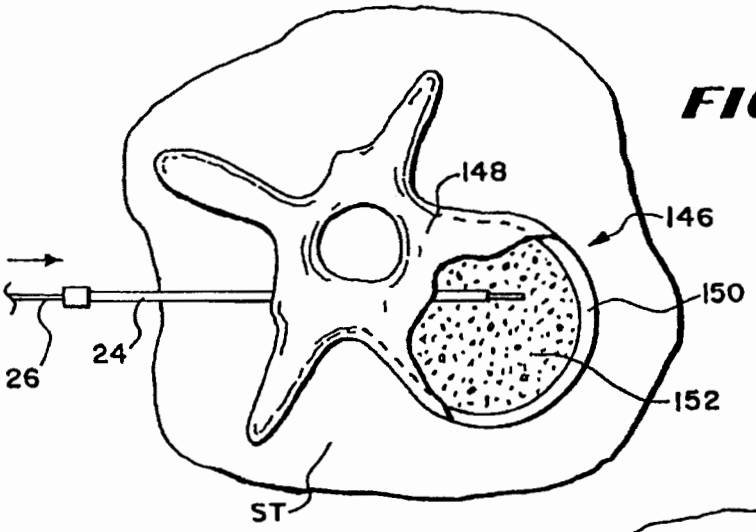

FIG. 11

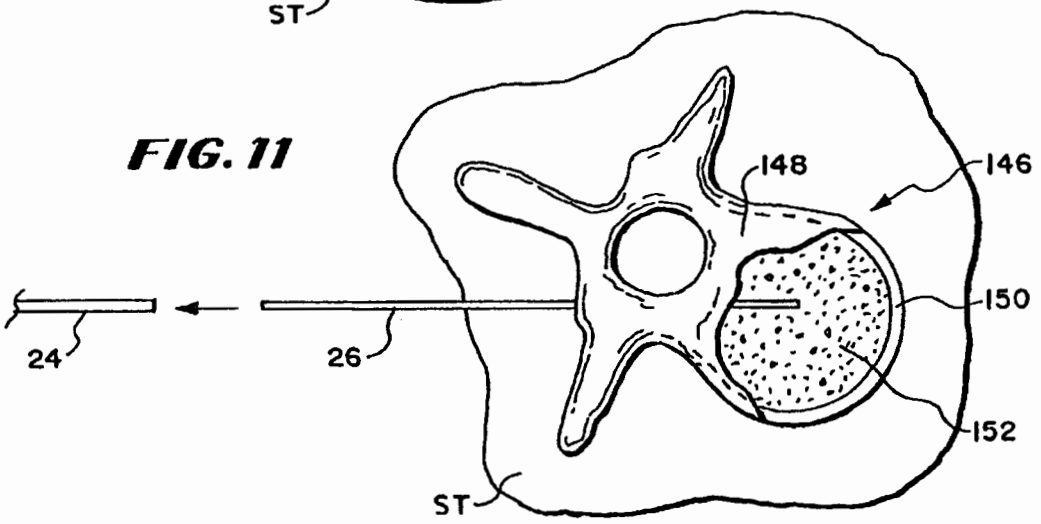

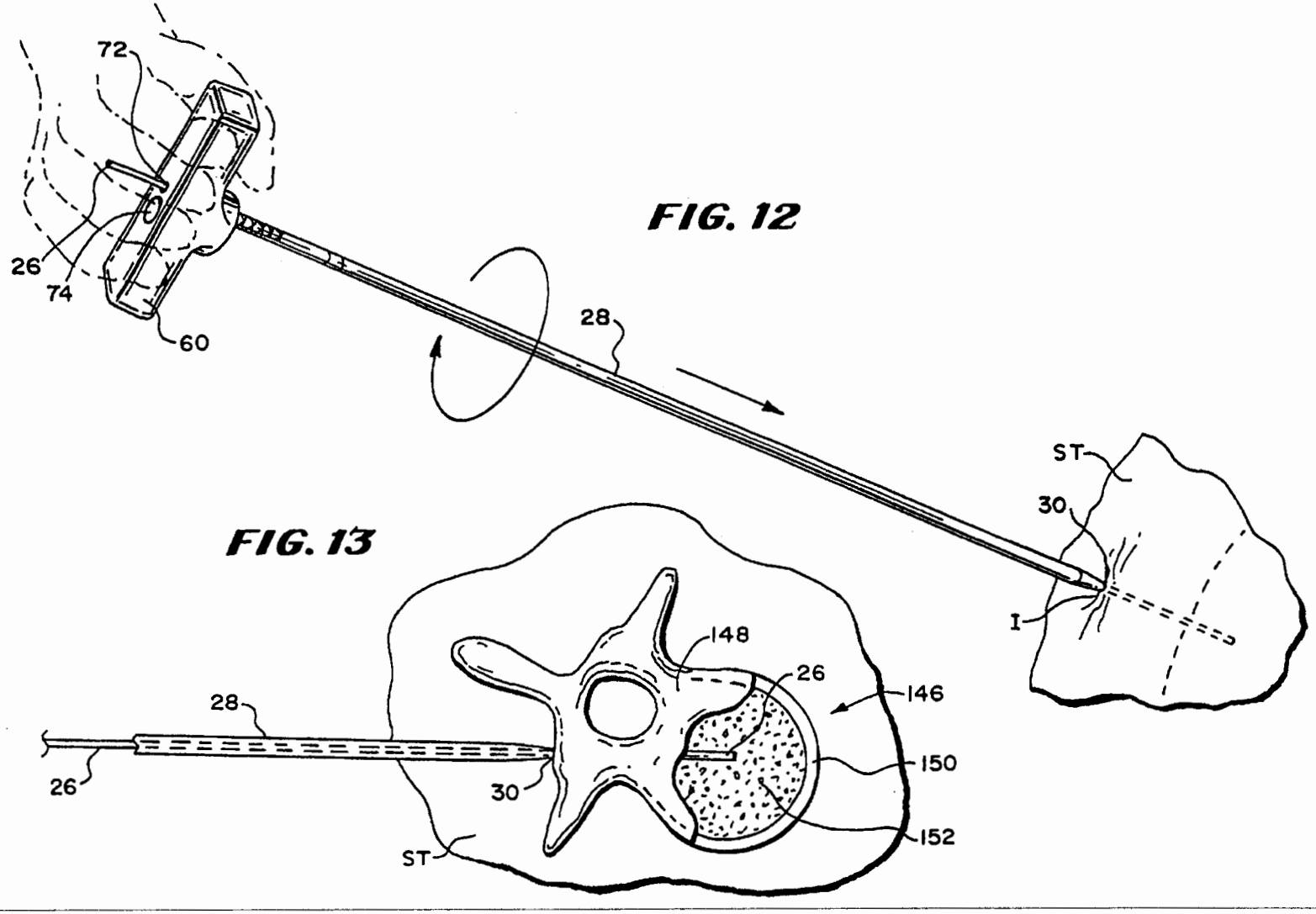

FIG. 12

FIG. 13

FIG. 14

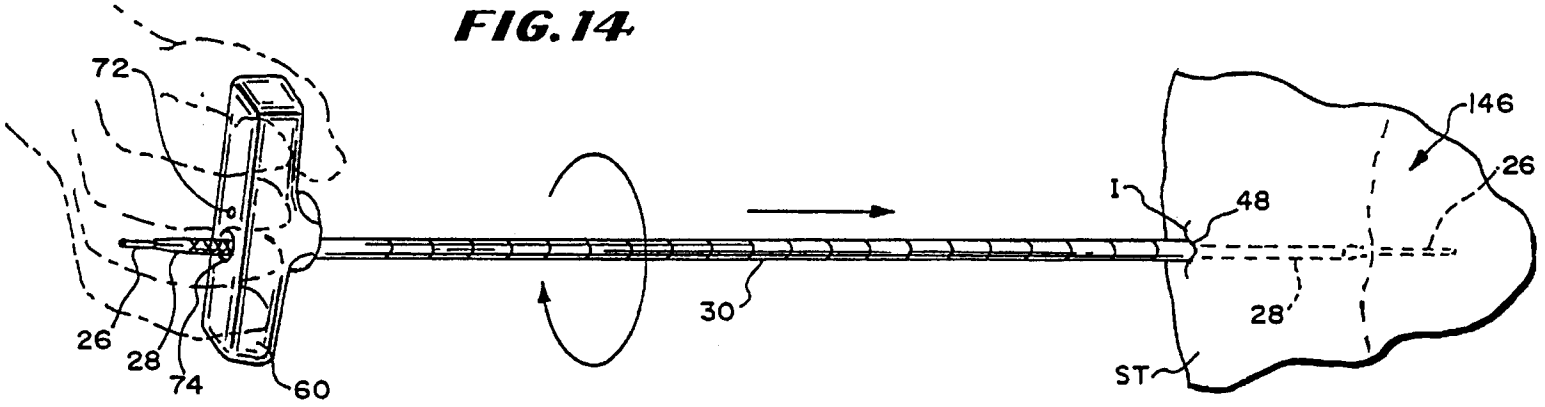

FIG. 15

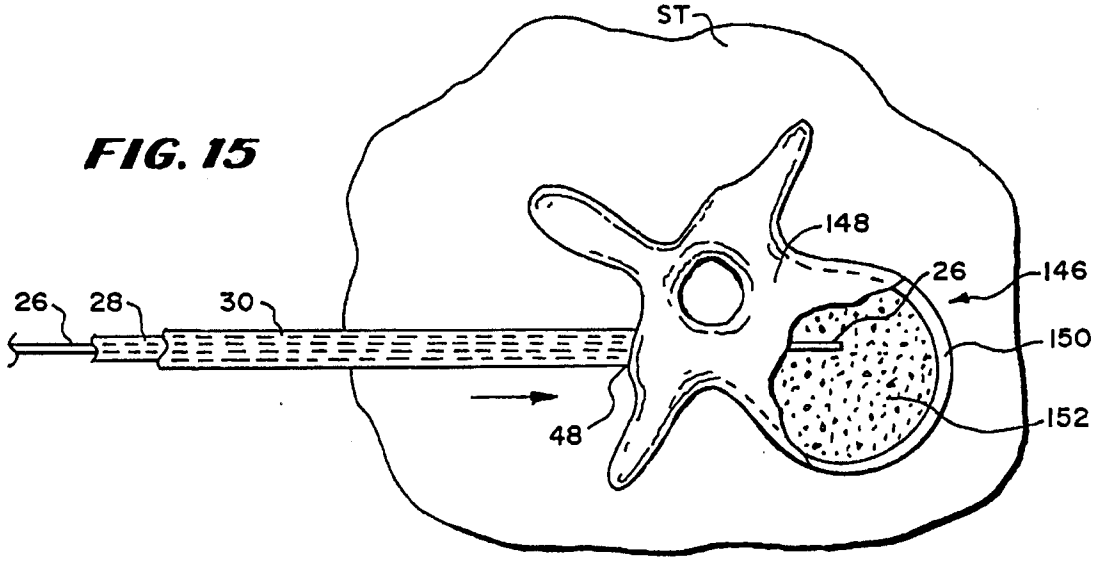

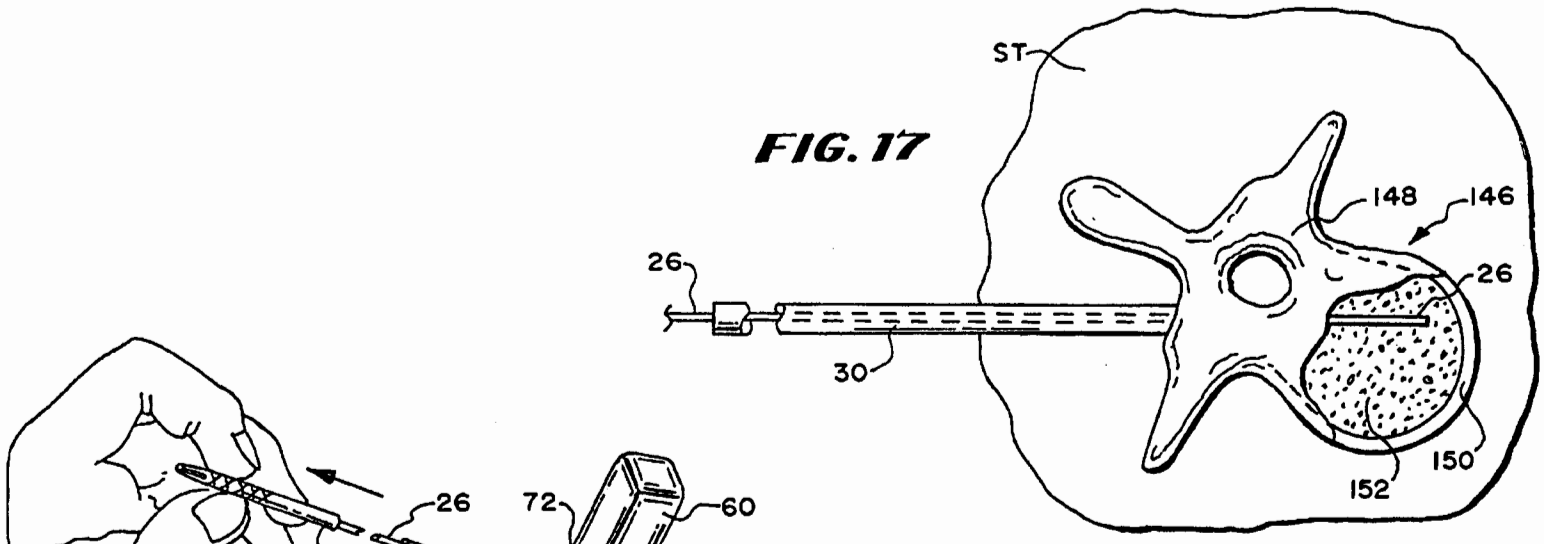

FIG. 17

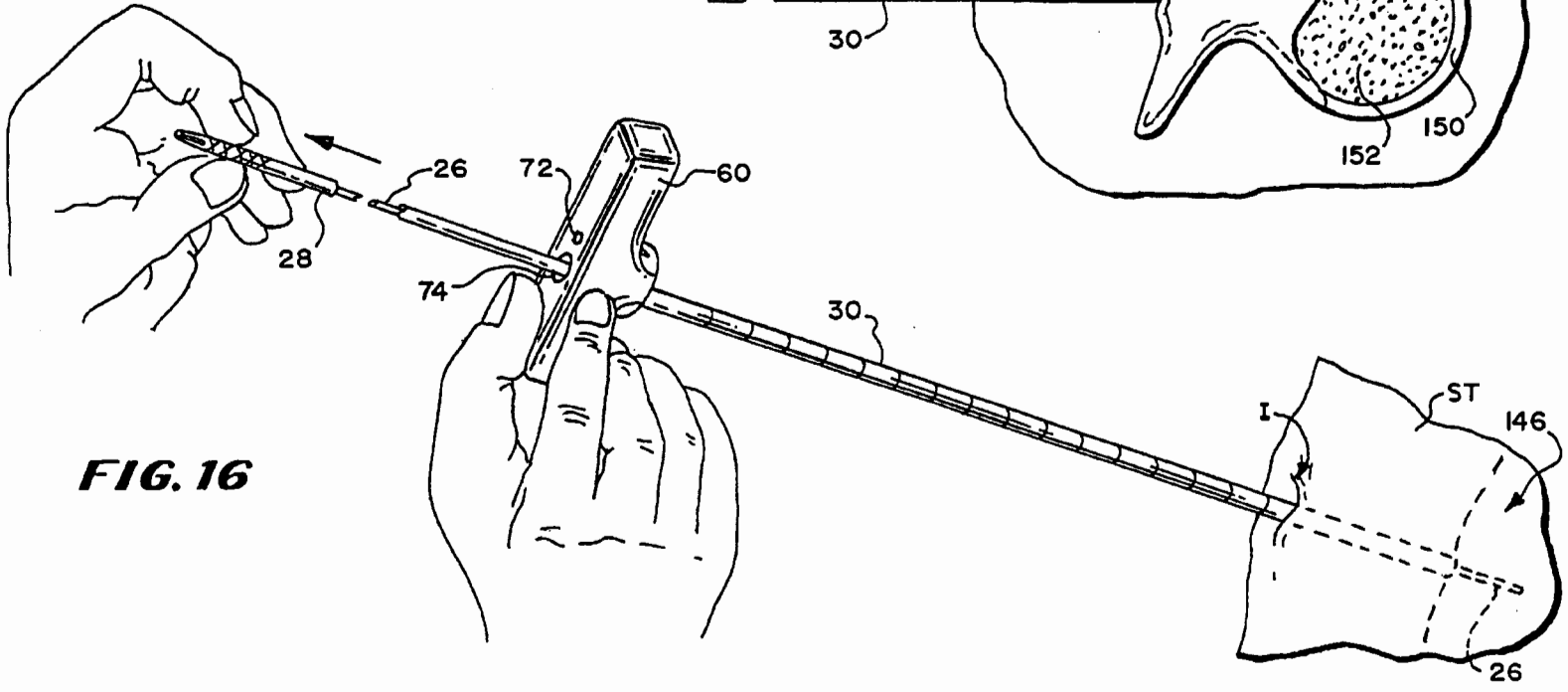

FIG. 16

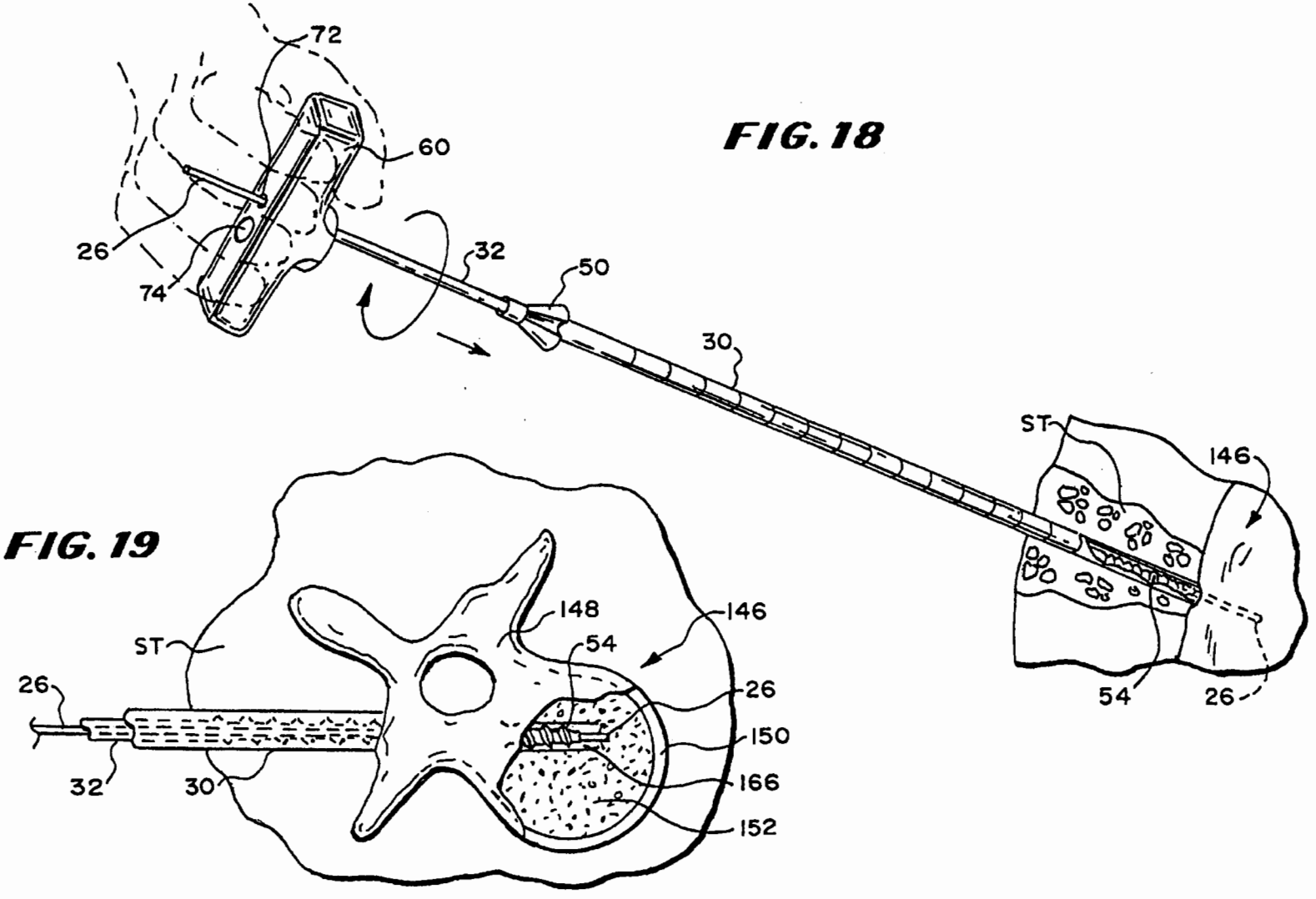
72
60
26
74
32
50
30
ST
146
54
26
FIG. 18
FIG. 19
ST
148
146
54
26
150
166
152
26
32
30

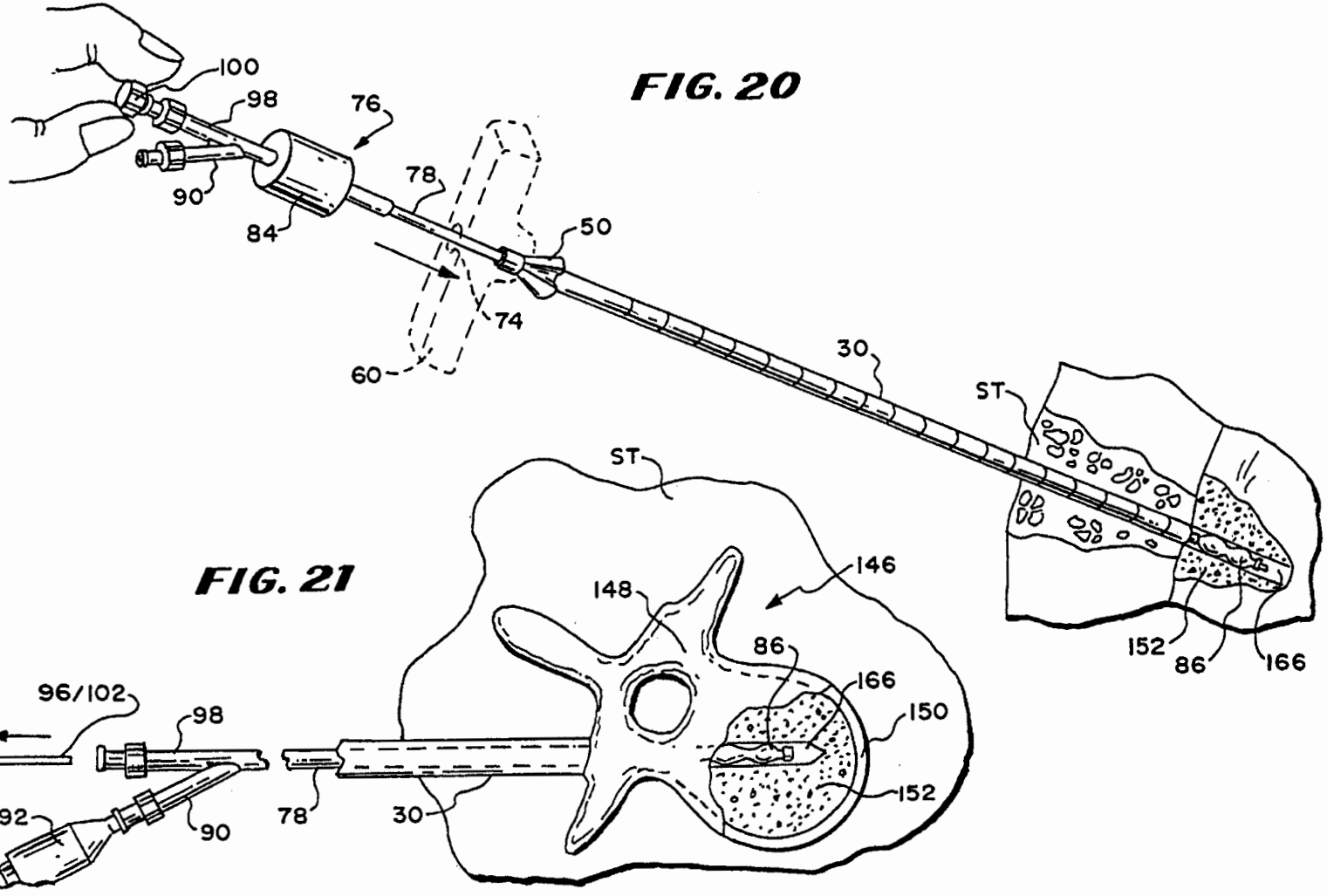
100
98
76
78
90
84
50
74
60
30
ST
152
86
166
ST
146
148
86
166
150
152
96/102
98
92
90
78
30

FIG. 20

FIG. 21

FIG. 22

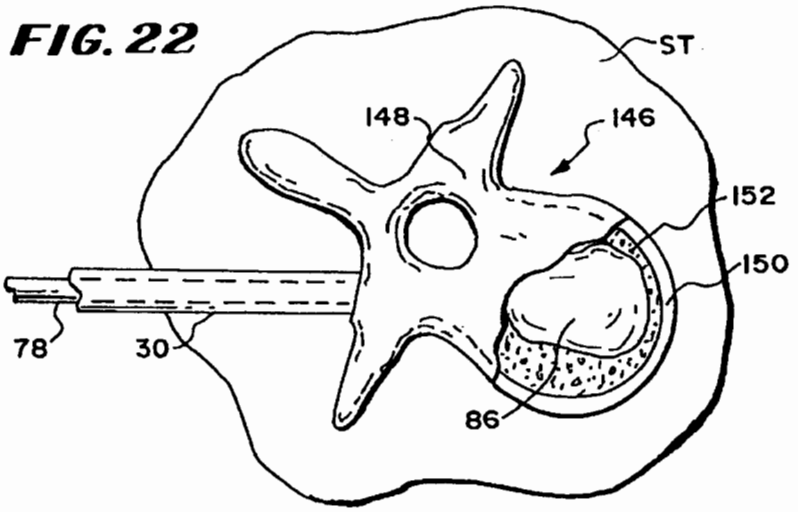

FIG. 23

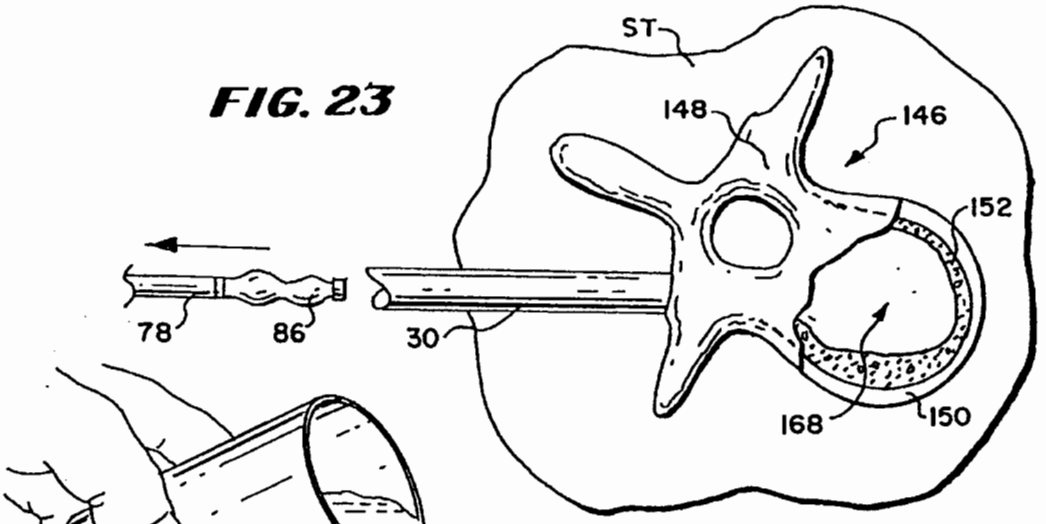

FIG. 24

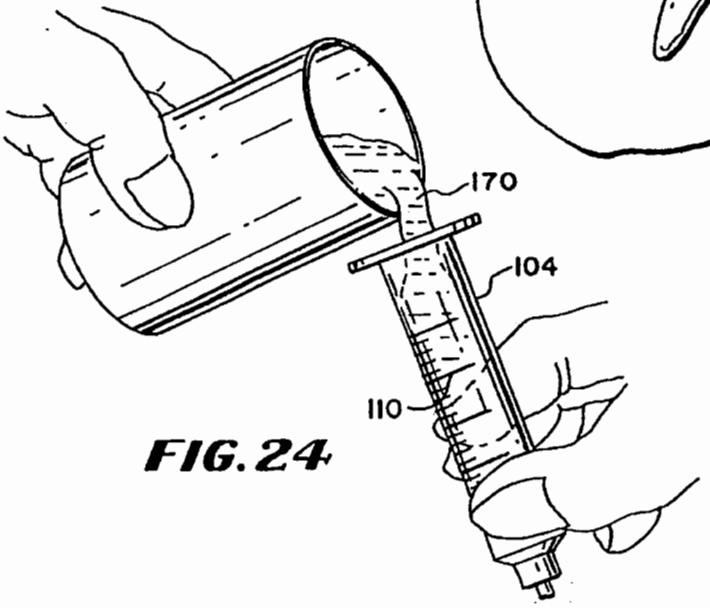

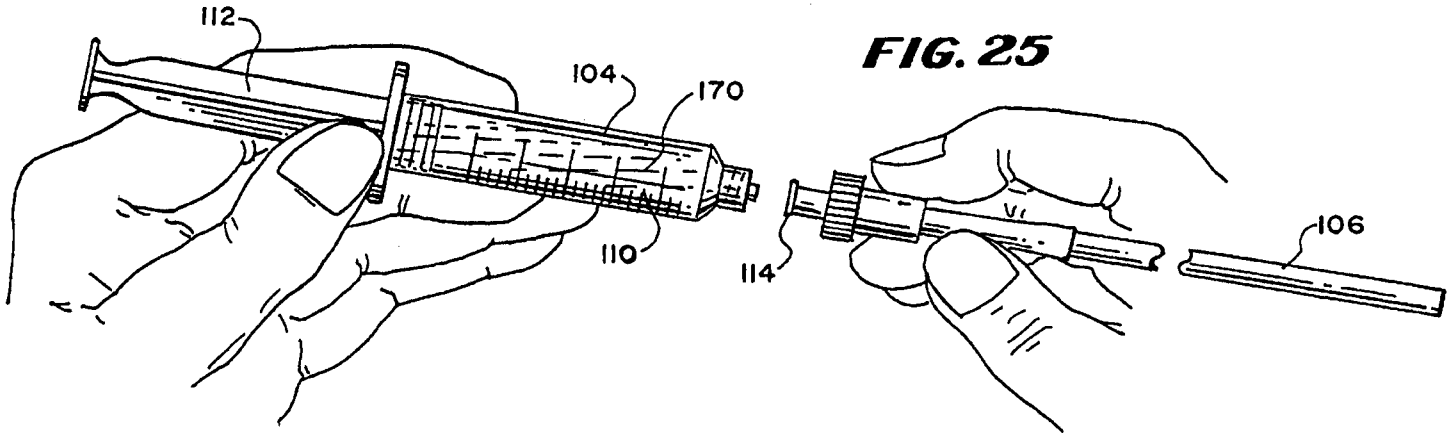
112
104
170
110
114
106

FIG. 25

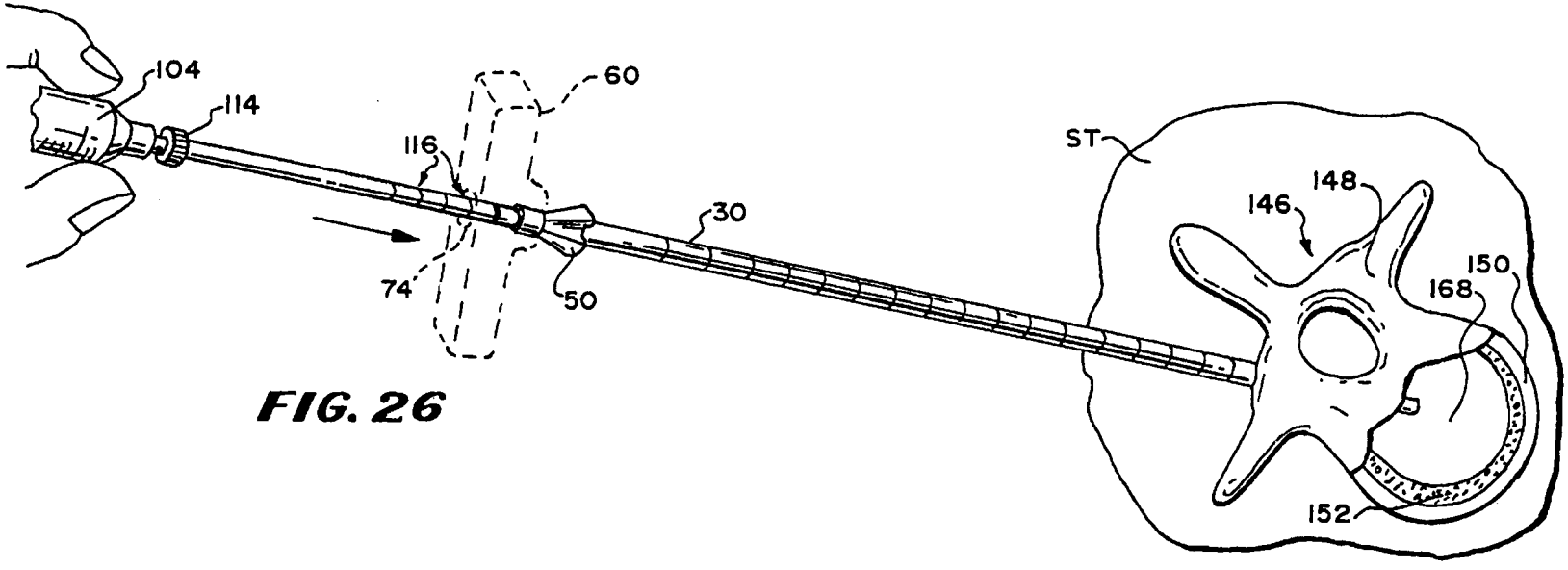
104
114
116
60
74
50
30
ST
148
146
150
168
152

FIG. 26

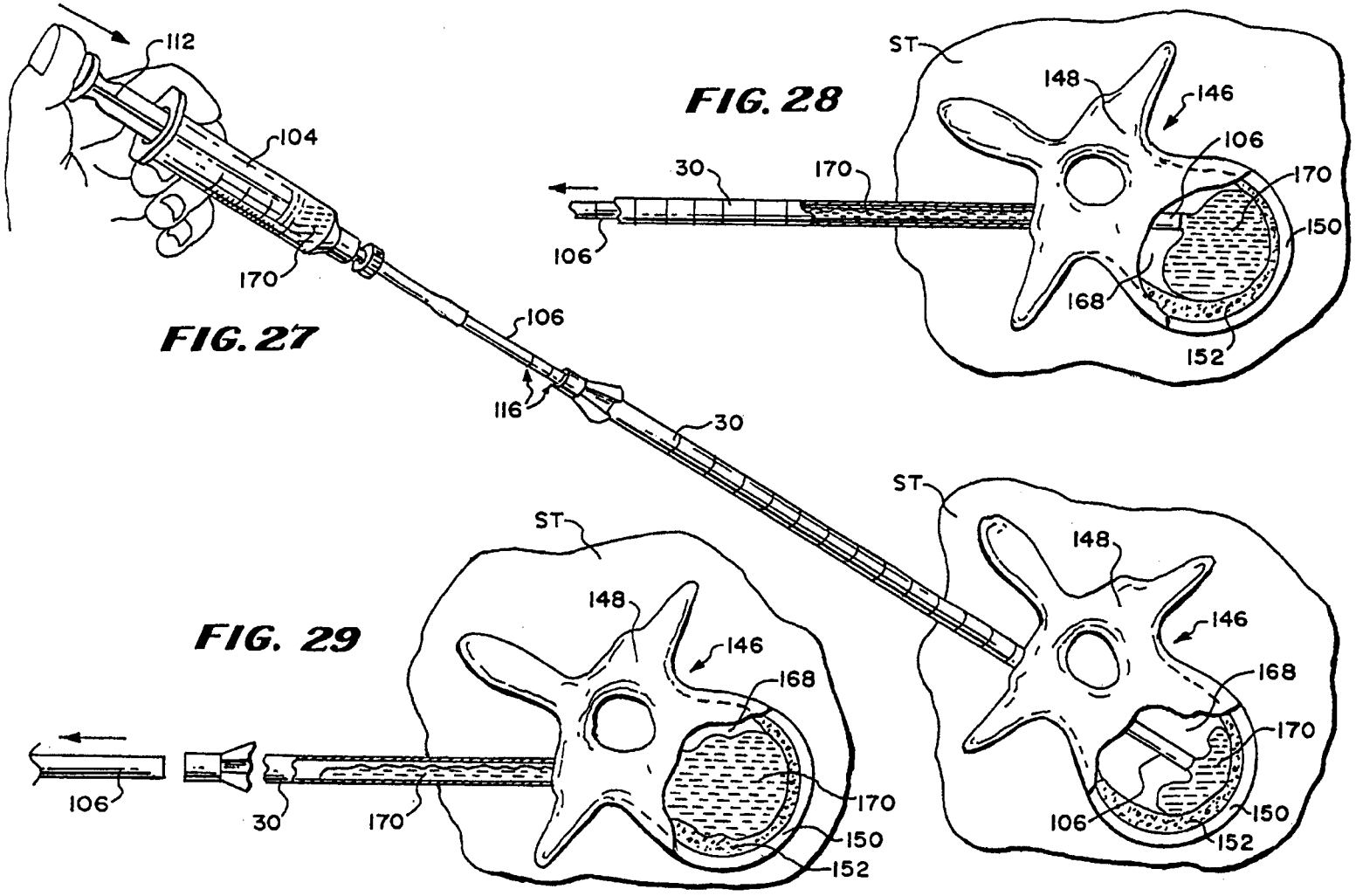

FIG. 27

FIG. 28

FIG. 29

FIG. 30

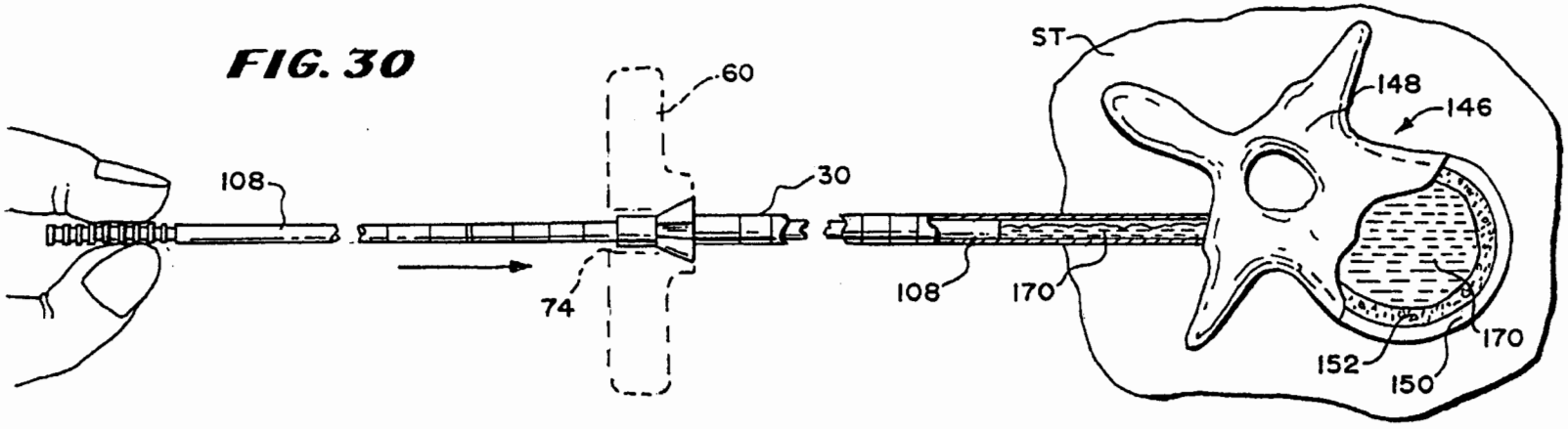

FIG. 31

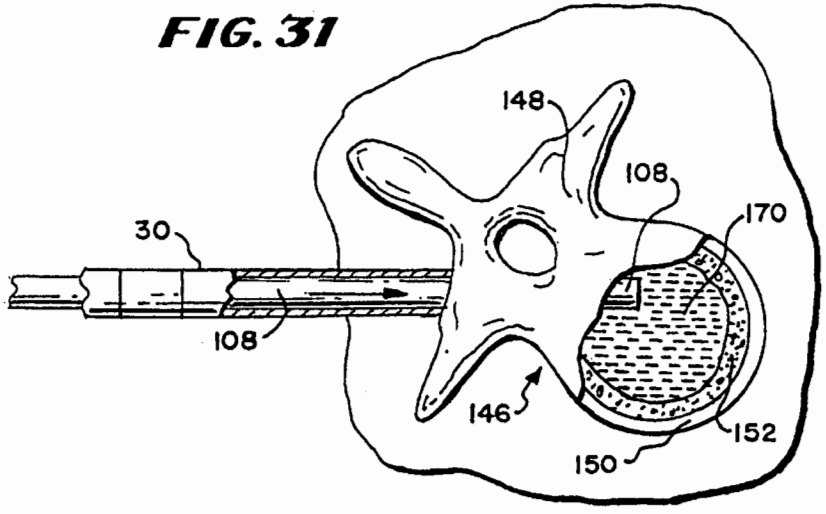

FIG. 32

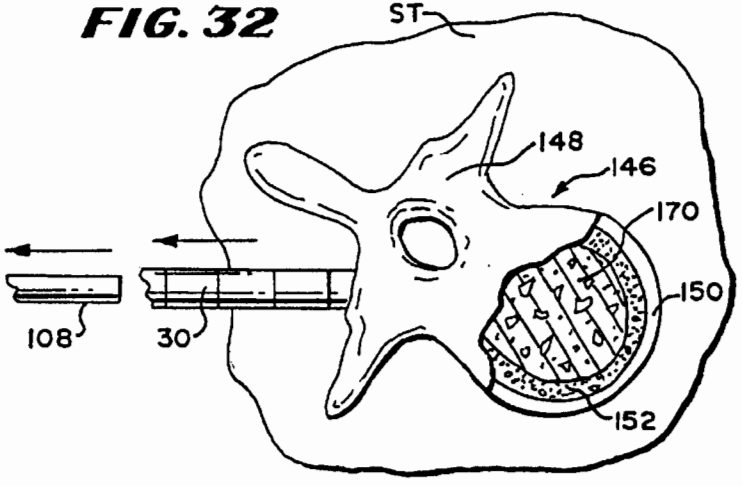

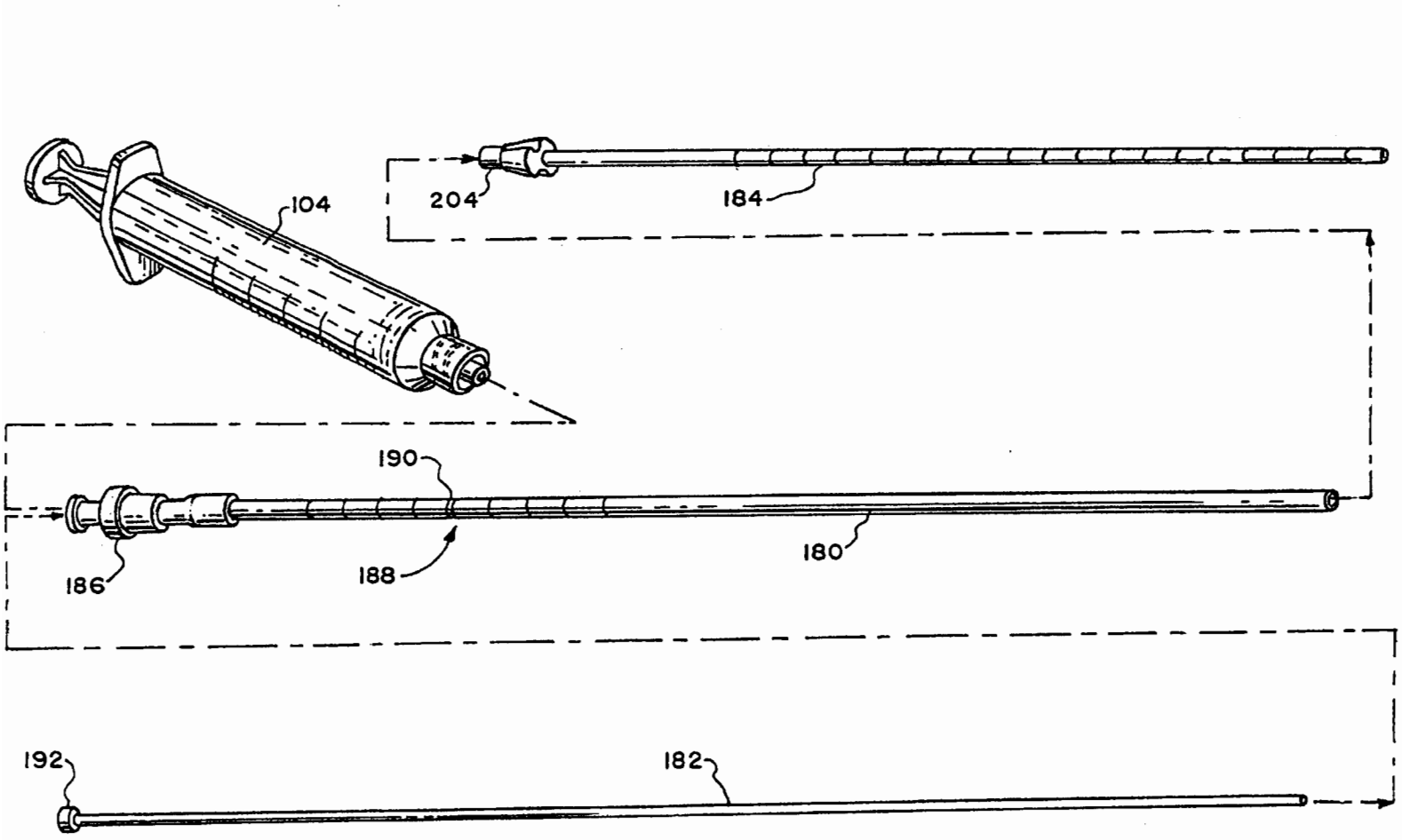

FIG. 33

FIG 34

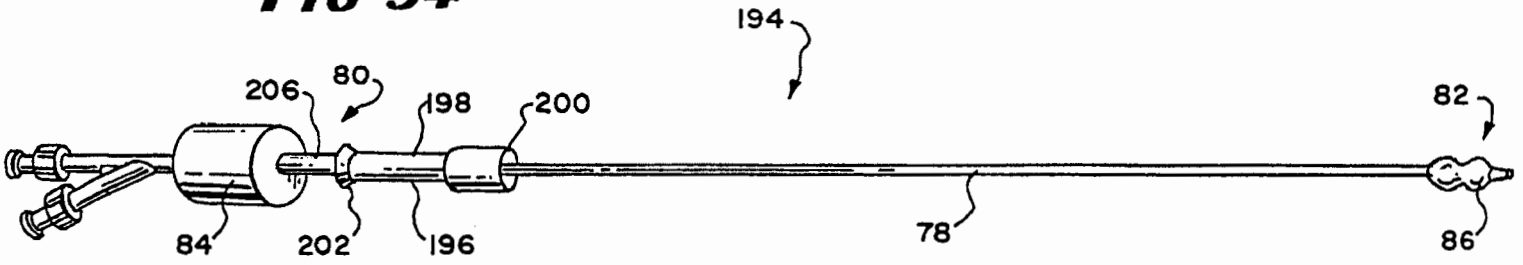
194
206
80
198
200
82
84
202
196
78
86

FIG. 35

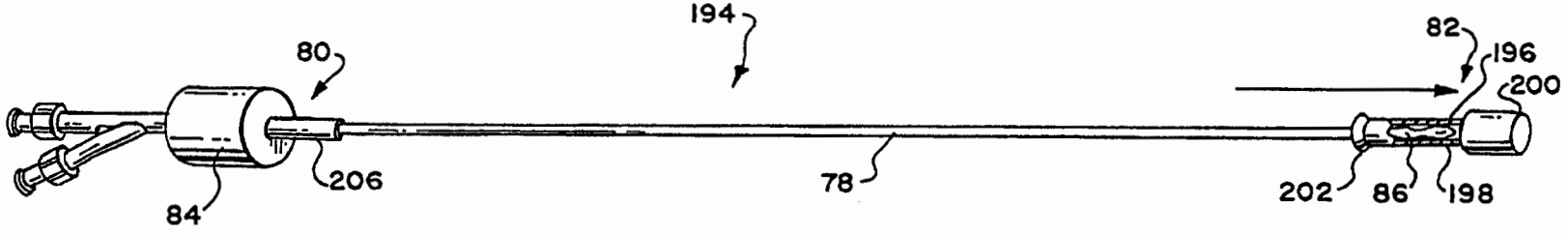
194
82
196
200
80
206
78
84
202
86
198

FIG. 36

FIG. 37

SYSTEMS AND METHODS FOR PLACING MATERIALS INTO BONE

FIELD OF THE INVENTION

The invention generally relates to the treatment of bone conditions in humans and other animals.

BACKGROUND OF THE INVENTION

Injection devices similar to a household caulking gun are used to inject bone cement into bone. A typical bone cement injection device has a pistol-shaped body, which supports a cartridge containing bone cement. A trigger actuates a spring-loaded ram, which forces a volume of bone cement in a viscous condition through a suitable nozzle and into the interior of a bone targeted for treatment. According to the teachings of U.S. Patent Nos. 4,969,888 and 5,108,404, a cavity can be first formed by compacting cancellous bone inside the bone, into which the bone cement is injected. Conventional cement injection devices provide no opportunity to override the spring action and quickly terminate the flow of cement, should the cavity fill before the spring-actuated load cycle is completed. Furthermore, once the spring-actuated mechanism is triggered, conventional cement injection devices do not permit the injection volume or inject rate to be adjusted or controlled in real time, in reaction to cancellous bone volume and density conditions encountered inside bone.

In a clinical procedure called vertebroplasty, bone cement is injected at high pressure (typically, about 700 psi) into the interior of a vertebral body, without the prior formation of a cavity. Because high pressure is used, there is little opportunity to quickly and accurately adjust cement flow in reaction to bone volume and density conditions encountered. Momentum generated by high pressure-induced cement flow continues to propel cement into the targeted bone site even after termination of the high pressure.

As a result of the relatively high pressure that conventional procedures rely upon, coupled with the effective lack of a short response time, the targeted bone interior can suddenly overfill. Excess filling material can be forced outside the bone interior, and into adjoining tissue regions, where the presence of filling material is not required or desired.

For these and other reasons, there is a need for new systems and methods for placing material into bones, with greater rate and volume control, a faster response time, and without requiring the use of high pressure.

SUMMARY OF THE INVENTION

The invention provides instruments, systems, and methods, which, in use, enable greater control over the placement of materials into bone.

One aspect of the invention provides an instrument for tamping material into bone through a subcutaneous path. The instrument comprises a body having a length and a terminus. The body includes markings located along the length at increments from the terminus. The markings allow the physician to gauge the position of the instrument in the subcutaneous path, as material is being tamped into bone. In particular, the markers allow the physician to tell at a glance the location of the terminus, in terms of how far beyond or short of the end of the subcutaneous path it is.

In one embodiment, the instrument is used by deploying a cannula to establish a subcutaneous path into bone. A material is introduced into bone through the cannula. The terminus of the instrument is advanced through the cannula to urge material residing in the cannula into bone.

Another aspect of the invention provides an apparatus for introducing material into bone through a subcutaneous cannula. The apparatus includes a delivery device to convey the material at a low delivery pressure. As used herein, a "low delivery pressure" is equivalent to the pressure at which liquid is expressed from 1 cc syringe by the application of moderate force to the syringe piston, which amounts to a pressure that is no greater than about 360 psi.

According to this aspect of the invention, the apparatus also includes a nozzle instrument capable of advancement through the subcutaneous cannula into bone. The nozzle comprises a proximal fitting to couple the nozzle instrument to the delivery device. The nozzle further comprises a nozzle terminus through which the material conveyed by the delivery device enters bone at the delivery pressure.

In one embodiment, the delivery device comprises a syringe.

In one embodiment, the apparatus further includes a tamping instrument, which is capable of advancement through the subcutaneous cannula. The tamping instrument has a tamping terminus which, during the advancement, urges material residing in the subcutaneous cannula into bone.

In one embodiment, the tamping instrument includes markings to visually gauge the advancement of the tamping terminus through the subcutaneous cannula.

In one embodiment, the apparatus is used by deploying a cannula to establish a subcutaneous path into bone. The delivery device is actuated to convey material at the delivery pressure through the nozzle terminus into bone.

Another aspect of the invention provides a tool for deployment into bone. The tool comprises a catheter tube having a distal region and an expandable structure carried by the distal region for compacting cancellous bone. The tool also includes an introducer sleeve slidably carried by the catheter tube for movement between a retracted position spaced from the expandable structure and an advanced position overlying the expandable structure. The introducer sleeve includes a tubular main body dimensioned to compress the expandable structure when the introducer sleeve is in the advanced position. A collar extends beyond the distal region of the catheter tube when the introducer sleeve is in the advanced position. The collar is dimensioned larger than the tubular main body to releasably engage an end of a cannula. Thus, the introducer sleeve both sizes and aligns the expandable structure for passage into the cannula through the end of the cannula.

Another aspect of the invention provides apparatus for introducing material into bone through a subcutaneous cannula. The apparatus includes a delivery device to convey the material at a low delivery pressure, i.e., a pressure no greater than about 360 psi. The apparatus also includes a nozzle instrument capable of advancement through the subcutaneous cannula into bone and comprising a proximal fitting to couple the nozzle instrument to the delivery device. The nozzle also includes a nozzle bore, through which the material conveyed by the delivery device enters bone at the delivery pressure. The apparatus further includes a stylet capable of advancement into the nozzle bore through the proximal fitting to close the nozzle bore and, with the nozzle instrument. Together, the nozzle and the stylet form a tamping instrument capable of advancement through the subcutaneous cannula to urge residual material from the subcutaneous cannula.

Another aspect of the invention provides a method for delivering material into bone. The method deploys a cannula through soft tissue to establish a subcutaneous path into bone. The method introduces a material into bone through the cannula. The method advances a tamping instrument through the cannula to urge material residing in the cannula into bone.

In one embodiment, the method delivers material at a low delivery pressure, i.e., a pressure no greater than about 360 psi.

In one embodiment, the introducing step uses a manual syringe.

The material can comprise medication or a material that sets to a hardened condition e.g., bone cement, or autograft tissue, or allograft tissue, or synthetic bone substitute, or combinations thereof.

In one embodiment, the method further includes the step of deploying a cavity forming instrument through the cannula to compress cancellous bone and form a cavity. In this embodiment, the introducing and advancing steps convey material into the cavity.

Features and advantages of the inventions are set forth in the following Description and Drawings, as well as in the appended Claims.

BRIEF DESCRIPTION OF THE DRAWINGS

FIG. **1** is a plane view of a kit housing a system of functional instruments, which, in use, gain subcutaneous access to the inside of a bone to compact cancellous bone and form a cavity for therapeutic purposes;

FIG. **2** is an exploded perspective view of the kit shown in FIG. **1**;

FIG. **3** is a perspective view of the subcutaneous access instrument group that forms a part of the system shown in FIG. **1**;

FIG. **4A** is a perspective view of the cavity forming instrument that forms a part of the system shown in FIG. **1**;

FIG. **4B** is a section view of the catheter tube of the cavity forming instrument, taken generally along line **4B—4B** in FIG. **1**;

FIG. **4C** is an end view of an alternative embodiment of the cavity forming instrument shown in FIG. **4A**, having a prebent stylet;

FIG. **5** is a perspective view of the material introducing instrument group that forms a part of the system shown in FIG. **1**;

FIGS. **6** and **7** are, respectively, top and side views of a human vertebral body;

FIG. **8** is a top view of a vertebral body during insertion of a spinal needle instrument to begin a bone access procedure;

FIGS. **9** to **11** are top views showing subsequent steps, after insertion of the spinal needle instrument shown in FIG. **8**, of inserting a guide pin instrument into the vertebral body;

FIG. **12** is a perspective view showing a subsequent step, after insertion of the guide pin instrument shown in FIGS. **9** to **11**, which deploys an obturator instrument deployed over the guide pin instrument with aid of a handle;

FIG. **13** is a top view of the vertebral body, with the obturator instrument shown in FIG. **12** deployed;

FIG. **14** is a perspective view showing a subsequent step, after insertion of the obturator instrument shown in FIG. **12**, which uses the handle shown in FIG. **12** to aid in the deployment of a cannula instrument over the obturator instrument;

FIG. **15** is a top view of the vertebral body, with the cannula instrument shown in FIG. **14** deployed;

FIG. **16** is a perspective view showing a subsequent step, after insertion of the cannula instrument shown in FIG. **14**, which removes the obturator instrument from the cannula instrument, to leave the cannula instrument and guide pin instrument in place;

FIG. **17** is a top view of the vertebral body, after the obturator removal step shown in FIG. **16**, leaving the cannula instrument and guide pin instrument in place;

FIG. **18** is a perspective view showing a subsequent step, after removal of the obturator instrument shown in FIG. **16**, which uses the handle shown in FIG. **14** to aid in the deployment of a drill bit instrument through the cannula instrument along the guide pin instrument;

FIG. **19** is a top view of the vertebral body, as the drill bit instrument shown in FIG. **18** is deployed with aid of the handle to open a passage into the interior volume of the vertebral body;

FIG. **20** is a perspective view showing a subsequent step, after removal of the drill bit instrument and guide pin instrument shown in FIG. **18**, of deploying the cavity forming instrument into the vertebral body;

FIG. **21** is a top view of the vertebral body, as the expandable structure carried by the cavity forming instrument shown in FIG. **20** is deployed into the interior volume of the vertebral body;

FIG. **22** is a top view of the vertebral body, as the expandable structure shown in a collapsed condition in FIG. **21** is expanded to compact cancellous bone and form a cavity;

FIG. **23** is a top view of the vertebral body, after removal of the expandable structure, showing the cavity formed by compacting cancellous bone;

FIG. **24** is a perspective view of the syringe of the material introducing instrument group, shown in FIG. **5**, being filled with a material selected for introduction into the cavity shown in FIG. **23**;

FIG. **25** is a perspective view of the syringe shown in FIG. **24** being joined to a nozzle, which also forms a part of the material introducing instrument group shown in FIG. **5**;

FIG. **26** is a perspective view showing the syringe and attached nozzle shown in FIG. **25** being deployed through the cannula instrument in preparation of introducing material into the cavity;

FIGS. **27** and **28** are perspective and top views, respectively, showing the syringe and attached nozzle shown in FIG. **26** in use to inject material into the cannula instrument for passage into the cavity;

FIG. **29** is a top view of the vertebral body after a measured volume of material has been injected and the syringe and attached nozzle withdrawn from the cannula instrument;

FIG. **30** is a top view showing the deployment of a tamping instrument, which forms a part of the material introducing instrument group shown in FIG. **5**, being deployed in the cannula instrument;

FIG. **31** is a top view showing advancement of the tamping instrument in the cannula instrument to displace and distribute material from the cannula instrument into the cavity;

FIG. **32** is a top view of the vertebral body after removal of the tamping instrument and cannula instrument, showing the cavity, now filled with the material;

FIG. **33** is a perspective view of a reduced diameter cannula instrument and associated reduced diameter material introducing instruments, which embody features of the invention;

FIG. **34** is a perspective view of a cavity forming instrument having an expandable cavity forming structure, which, in use, is deployed using the reduced diameter cannula instrument shown in FIG. **33**, the cavity forming instrument having a sliding introducer sleeve shown in its rearward position;

FIG. **35** is a perspective view of the cavity forming instrument shown in FIG. **34**, with the introducer sleeve moved forward to overlie and compress the expandable cavity forming structure;

FIG. **36** is a perspective view of the cavity forming structure shown in FIG. **35**, with the introducer sleeve (shown partially in section) coupled to the proximal end of the cannula instrument, to guide the expandable structure compressed within the sleeve into the reduced diameter cannula instrument without damage; and

FIG. **37** is a perspective view of the cavity forming structure shown in FIG. **36**, after the expandable structure has been guided by the introducer sleeve into the cannula instrument and is being advanced through the cannula instrument for deployment in bone.

The invention may be embodied in several forms without departing from its spirit or essential characteristics. The scope of the invention is defined in the appended claims, rather than in the specific description preceding them. All embodiments that fall within the meaning and range of equivalency of the claims are therefore intended to be embraced by the claims.

DETAILED DESCRIPTION OF THE PREFERRED EMBODIMENTS

FIGS. **1** and **2** show a system **10** of functional instruments. In use, certain instruments of the system **10** are deployed in a purposeful manner to penetrate tissue and gain subcutaneous access to the inside of a bone. Inside bone, other instruments of the system **10** are deployed to form a cavity in cancellous bone, into which a material is placed for therapeutic purposes.

In the illustrated embodiment, the system **10** is arranged as a prepackage kit **12** in three functional instrument groups **14**, **16**, and **18**. The first group **14** (which FIG. **3** shows outside the kit **12**) comprises instruments whose purpose is to gain subcutaneous access to a bone interior. The second group **16** (which FIG. **4** shows outside the kit **12**) comprises an instrument whose function is to create a cavity in cancellous bone. The third group **18** (which FIG. **5** shows outside the kit **12**) comprises instruments whose function is to introduce a material into the cavity.

The kit **12** can take various forms. In the illustrated embodiment, the kit **12** comprises a sterile, wrapped assembly.

Further details of each functional instrument group **14**, **16**, and **18** and the kit **12** follow.

I. The Subcutaneous Access Instrument Group

The number and type of instruments in the group **14** can vary. FIG. **3** shows five representative instruments, each having a different size and function.

A. The Spinal Needle and Guide Pin

As FIG. **3** shows, one instrument comprises a conventional spinal needle assembly **20** and a guide pin instrument **26**.

In use, the spinal needle assembly **20** establishes the initial subcutaneous path leading to the targeted treatment site. The guide pin instrument **26** is deployed through this path, followed by progressively larger instruments, as will be described later.

The spinal needle assembly **20** comprises a stylet **22**, which is slidably deployed within a stylus **24**. The stylus **24** typically has, for example, about an eleven gauge diameter. Other gauge diameters can be used, according to the gauge of the guide pin instrument **26** used.

In use, the guide pin instrument **26** is deployed through the subcutaneous path established by the spinal needle assembly **20**, by exchange with the needle stylet **22**. The guide pin instrument **26** serves to guide the establishment of the main operative pathway to the targeted treatment site.

The remaining instruments **28**, **30**, and **32** in the group **14** share some common features, although they are intended, in use, to perform different functions. These instruments **28**, **30**, and **32** are each made of a rigid, surgical grade plastic or metal material. These instruments **28**, **30**, and **32** each comprises an elongated, cylindrical body having a proximal end **34** and a distal end **36**.

B. The Obturator Instrument

The instrument **28** functions as an obturator. Its distal end **36** is tapered to present a penetrating surface **38**. In use, the surface **38** is intended to penetrate soft tissue in response to pushing or twisting forces applied by the physician at the proximal end **34**.

The proximal end **34** of the obturator instrument **28** presents a flanged surface **40**, which tapers from a larger outer diameter to a smaller outer diameter in the direction of the proximal end **34**. The flanged surface **40** includes an array of circumferentially spaced teeth **42**.

An interior lumen **44** extends through the obturator instrument **28** from the distal end **36** to the proximal end **34**. The interior lumen **44** is sized to accommodate the guide pin instrument **26**, as will be described in greater detail later.

C. The Cannula Instrument

The instrument **30** functions as a cannula or guide sheath. The cannula instrument **30** is somewhat larger in diameter than and not as long as the obturator instrument **28**. The cannula instrument **30** includes an interior lumen **46** that extends from its distal end **36** to its proximal end **34**. The interior lumen **46** is sized to accept the obturator instrument **28**. The size of the interior lumen **46** permits a physician to slide and rotate the cannula instrument **30** relative to the obturator instrument **28**, and vice versa, as will be described in greater detail later.

The distal end **36** of the cannula instrument **30** presents an end surface **48**. In use, the end surface **48** of the cannula instrument **30** is intended to penetrate soft tissue surrounding the obturator instrument **28** in response to pushing or twisting forces applied at the proximal end **34**.

The proximal end **34** carries an enlarged fitting **50**. The fitting **50** tapers from a larger diameter to a smaller diameter in the direction of the proximal end **34**. Like the tapered flange **40** on the obturator instrument **28**, the tapered fitting **50** has an array of circumferentially spaced teeth **52**. The tapered fitting **50** of the cannula instrument **30** possesses a larger maximum outer diameter than the maximum outer diameter of the tapered flange **40** of the obturator instrument **28**.

The cannula instrument **30** includes measured markings **118** along its length (see FIG. **3**). The measured markings **118** gauge the depth of insertion. The markings **118** can be

placed, for example, at one centimeter intervals. As FIG. **3** shows, the markings **118** can be consecutively numbered, beginning at the distal end **36**, so that the physician can ascertain the insertion depth at a glance.

D. The Drill Bit Instrument

The instrument **32** functions as a drill bit. The drill bit instrument **32** has generally the same physical dimensions as the obturator instrument **28**. Like the obturator instrument **28**, the drill bit instrument **32** is intended, in use, to fit for sliding and rotational movement within the interior lumen **46** of the cannula instrument **30**.

The distal end **36** of the drill bit instrument **32** includes machined cutting edges **54**. In use, the cutting edges **54** are intended to penetrate hard tissue in response to rotation and longitudinal load forces applied at the proximal end **34** of the drill bit instrument **32**.

The proximal end **34** presents a tapered flange **56**, which is substantially identical to the flange **40** on the obturator instrument **28**. Like the obturator instrument **28**, the tapered flange **56** changes from a larger diameter to a smaller diameter in the direction of the proximal end **34**. The tapered flange **56** of the drill bit instrument **32** also includes an array of circumferentially spaced teeth **58**. The form and orientation of the teeth **58** on the drill bit instrument **32** correspond to the form and orientation of the teeth **42** on the obturator instrument **28**.

E. The Handle

The group includes a handle **60**. The handle **60** engages the functional instruments **28**, **30**, and **32** in a removable, slip fit fashion to aid a physician in manipulating the instruments during use.

The handle **60** is made from a molded or cast rigid plastic or metal material. The handle **60** is shaped to be comfortably and securely grasped by a normal human hand. The shape and size to accommodate this function can, of course, vary. In the illustrated embodiment, the handle **60** is elongated along a main axis to fit comfortably across the palm of the hand.

The handle **60** includes a center post **62**, which is integrally molded to the handle **60** about its geometric center. The center post **62** extends downward to give the handle **60** a general T-shape.

The handle **60** includes two interior cavities or sockets **64** and **66** in the center post **62**. The sockets guide the attachment between the handle **60** and the instruments **28**, **30**, and **32**. The first and second sockets **64** and **66** are sized to present unique attachment sites for different functional instruments.

The first socket **64** includes an array of circumferentially spaced grooves **68**, which, in form and orientation, match the teeth **42** and **58** at the proximal ends **34** of the obturator instrument **28** and the drill bit instrument **32**. The first socket **64** accepts the tapered flange **40** or **56** of either the obturator instrument **28** or the drill bit instrument **32**. The teeth **42** and **58** of either tapered flange **40** or **56** mesh in a slip-fit with the grooves **68** of the first socket **64**. The running slip-fit allows longitudinal force to be applied to either instrument **28** or **32** through the handle **60**. The running slip-fit also prevents relative rotation between either instrument **28** or **32** and the first socket **64**, thereby permitting torsional or twisting forces to be applied to either instrument **28** or **32** by the handle **60**, with an increased mechanical advantage.

The second socket **66** is larger than the first socket **64** and is sized to accept the larger tapered fitting **50** of the cannula instrument **30**. The second socket **66** includes an array of circumferentially spaced grooves **70**, which, in form and orientation, match the teeth **52** on the tapered fitting **50**. The teeth **52** of the tapered fitting **50** mesh in a slip-fit with the grooves **70** of the second socket **66**. The running slip-fit allows both longitudinal and torsional forces to be applied to the cannula instrument **30** through the handle **60**, with increased mechanical advantage.

As shown in phantom lines in FIG. **3**, a first passage **72** extends through the top of the handle **60**, through the center post **62**, and into the first socket **64**. The passage **72** is generally aligned with the center of the first socket **64** and is sized to pass the guide pin instrument **26** (see FIG. **12**).

Likewise, as also shown in phantom lines in FIG. **3**) a second passage **74** extends through the top of the handle **60**, through the center post **62**, and into the second socket **66**. The passage **74** is generally aligned with the center of the second socket **66** and is sized to pass the either obturator instrument **28** or the drill bit instrument **32** (see FIG. **14**).

Further details of the handle **60** can be found in copending U.S. patent application Ser. No. 09/014,229, filed Jan. 27, 1998, and entitled "A Slip-Fit Handle for Hand-Held Instruments that Access Interior Body Regions."

Further details regarding the use of the handle **60** and the associated instruments **26**, **28**, and **30** will be provided later.

II. The Cavity Forming Instrument

As FIG. **4A** shows, the group **16** includes an instrument **76**, which is deployed through the cannula instrument **30** to a location inside bone (see FIG. **20**). When so deployed, the instrument **76** serves to form a cavity in cancellous bone.

The instrument **76** can be constructed in various ways. In the illustrated embodiment, the instrument **76** includes a flexible catheter tube **78** having a proximal end **80** and a distal end **82**. The proximal end **80** carries a handle grip **84** to facilitate gripping and maneuvering the catheter tube **78**. The materials for the catheter tube **78** are selected to facilitate its advancement through the cannula instrument **30**. The catheter tube **78** can be constructed, for example, using standard flexible, medical grade plastic materials, like vinyl, nylon, polyethylenes, ionomer, polyurethane, and polyethylene tetraphthalate (PET). The catheter tube **78** can also include more rigid materials to impart greater stiffness and thereby aid in its manipulation. More rigid materials that can be used for this purpose include stainless steel, nickel-titanium alloys (Nitinol™ material), and other metal alloys.

The distal end **82** of the instrument **76** carries an expandable structure **86**. In the illustrated embodiment, the expandable structure **86** is made from a polyurethane or an elastomer (e.g., silicone or nylon) material. The structure **86** has been preformed to possess a desired shape by exposure to heat and pressure, e.g., through the use of conventional thermoforming techniques.

As FIG. **4B** shows, the catheter body **78** includes an interior lumen **88**, which communicates with the interior of the structure **86**. A fitting **90** on the proximal end **80** of the catheter tube **78** (see FIG. **4B**) communicates with the lumen **88**. The fitting **90** couples the lumen **88** to a source **92** of fluid, e.g., sterile saline (see FIG. **21**), or a radiopaque contrast medium.

The fluid is introduced from the source **92** into the structure **86** under positive pressure, causing the structure **86** to expand. During expansion inside bone, the material selected for the structure **86** preferably resists deformation, so that the expanded shape inside bone essentially corresponds to its expanded shape outside bone, i.e., when in an open air environment. This allows the physician to select in

an open air environment a structure **86** having an expanded shape desired to meet the targeted therapeutic result, with the confidence that the expanded shape inside bone will be similar in important respects. In addition to being able to expand its volume while resisting deformation inside bone, the material of the structure **86** preferable withstands abrasion, tearing, and puncture when in contact with cancellous bone.

The shape of the structure **86**, when expanded inside bone, is selected by the physician, taking into account the morphology and geometry of the site to be treated. The shape of the cancellous bone to be compressed, and the local structures that could be harmed if bone were moved inappropriately, are generally understood by medical professionals using textbooks of human skeletal anatomy along with their knowledge of the site and its disease or injury. The physician is also able to select the expanded shape inside bone based upon prior analysis of the morphology of the targeted bone using, for example, plain film x-ray, fluroscopic x-ray, or MRI or CT scanning. The expanded shape inside bone is selected to optimize the formation of a cavity that, e.g., when filled with a suitable material, provides support across the region of the bone being treated.

As one general guideline, in cases where the bone disease causing fracture (or the risk of fracture) is the loss of cancellous bone mass (as in osteoporosis), the selection of the expanded shape of the structure **86** inside bone should take into account that from 30% to 90% of the cancellous bone volume should be compacted. Another general guideline is the amount that the targeted fractured bone region has been displaced or depressed. The expansion of the structure **86** within the cancellous bone region inside a bone can elevate or push the fractured cortical wall back to or near its anatomic position occupied before fracture occurred.

In the illustrated embodiment (see FIG. 4A), the structure **86** possesses a preformed hour-glass or peanut shape. This shape is selected in contemplation of deploying the structure **86** in a vertebral body, as will be described in greater detail later.

To facilitate deployment of the structure **86** through the cannula instrument **30**, the catheter tube **78** includes a second interior lumen **94**. The lumen **94** extends from a second fitting **98** on the proximal end **80** of the catheter tube **78**, through the body of the cannula tube **78**, and through the interior of the structure **86** to the tip end **172** of the structure **86**. The lumen **94** receives a generally stiff stylet **96**, which can be made from a molded plastic or stainless steel material. The stylet **96** is inserted through the fitting **98** into the lumen **94**, and includes a threaded coupling **100** to secure the stylet **96** against movement. The presence of the stylet **96** serves to keep the structure **86** in the desired distally straightened condition during passage through the cannula instrument **30** into the targeted tissue region. Once the structure **86** is free of the cannula instrument **30** and inside bone, the stylet **96** can be withdrawn (shown by arrow **174** in FIG. 4A). This returns normal flexibility to the catheter tube **78** and facilitates manipulation of the structure **86** inside bone. With the stylet **96** withdrawn, the lumen **94** can also serve as a pathway for introducing rinsing liquid or to aspirate debris from the bone.

In the illustrated embodiment, the stylet **96** is biased toward a generally straight condition. In an alternative embodiment (see FIG. 4C), a stylet **102** can have a preformed memory, to normally bend its distal region. The memory is overcome to straighten the stylet **102** when confined within the cannula instrument **30**. However, as the structure **86** and distal region of the preformed stylet **102** advance free of the cannula instrument **30**, to pass into the targeted region, the preformed memory bends the distal region of the stylet **102** and thereby shifts the main axis of the expandable structure **86**. The prebent stylet **102**, positioned within the interior of the structure **86**, aids in altering the orientation of the structure **86**, bringing it into better anatomic alignment with the targeted region.

Other types of instruments that can form cavities in cancellous bone and other interior body regions are described in copending U.S. patent application Ser. No. 09/055,805, entitled "Structures and Methods for Creating Cavities in Interior Body Regions," filed Apr. 6, 1998.

III. The Material Introducing Instrument Group

The group **18** includes instruments **104**, **106**, and **108** which serve to convey and compact a selected material inside the cavity formed by the structure **86**. The material in the cavity provides a desired therapeutic result, e.g., replacement of tissue mass, or renewed interior support for the bone, or the delivery of medication, or combinations thereof. Accordingly, the material to perform this function can be selected from among, e.g., a material that sets to a hardened condition, including bone cement, autograft tissue, allograft tissue, synthetic bone substitute, as well as a medication, or combinations thereof.

In the illustrated embodiment, the group **18** comprises material injection instruments **104** and **106** and a material tamping instrument **108**, which deliver material at a low delivery pressure, i.e., a pressure no greater than about 360 psi.

A. Low Pressure Material Injection Instruments

In the illustrated embodiment, the material is injected by use of a conventional syringe **104**, to which a specially designed injection nozzle **106** is coupled. A manual actuated syringe with a push plunger can be used. Alternatively, a LeVeen Inflation Syringe with threaded plunger can be used, which can be actuated manually or by use of a mechanical actuator.

In the illustrated embodiment, the syringe **104** is made from a clear plastic material. The syringe **104** includes a chamber **110**, which receives the material to be injected. The material is expressed from the chamber **100** by a manually advanced syringe piston **112** (see also FIG. **25**).

The injection nozzle **106** connects by a threaded connector **114** to the end of the syringe **104 9** (see also FIG. **25**). In the illustrated embodiment, the nozzle **106** is made from a generally flexible, inert plastic material, such as such as polyethylene or an other suitable polymer. Alternatively, the nozzle **106** can be made from a generally rigid plastic or metal material.

The injection nozzle **106** is sized to be advanced through the cannula instrument **30** (see FIG. **26**). The nozzle **106** includes measured markings **116** along its length. The markings **116** can be placed, for example, at one centimeter intervals, to correspond with the markings **118** on the cannula instrument **30**, so that the relative position of the nozzle **106** within the cannula instrument **30** can be gauged. The markings **118** can, e.g., include a set point **176**. Alignment of the set point **176** at the proximal end **34** of the cannula instrument **30**, indicates that the distal end of the nozzle **106** is located in an aligned relationship with the distal end **36** of the cannula instrument **30**. In this arrangement, the markings **118** are consecutively numbered with positive numbers proximally of the set point **176** and with negative numbers distally of the set point **176**. The physician is thereby able to tell at a glance the location of the

distal end of the nozzle **106**, in terms of how far beyond or short of the distal end **36** of the cannula instrument **30** it is.

In use, the distal end of the nozzle **106** is located beyond the distal end **36** of the cannula instrument **30** within the cavity formed in the targeted tissue region. As FIG. **5** shows, the distal end of the nozzle **106**, when made from a plastic material, can carry at least one radiopaque marker **208**, to enable remote visualization of the nozzle position within the body. The syringe **104** ejects a predetermined volume of material into the nozzle **106** in a low pressure stream into the cavity. As the material fills the cavity, the nozzle (still ejecting material) is retracted from the cavity and into the cannula instrument **30** itself. Further details of this function and result will be provided later.

B. The Material Tamping Instrument

The group **18** also includes a material tamping instrument **108**. The tamping instrument **108** is made from generally rigid, inert plastic or metal material. The tamping instrument **108** is also sized to be advanced into the cannula instrument **30** (see FIG. **30**). The free end **124** of the tamping instrument **108** is ribbed or contoured to facilitate gripping the instrument **108** during use.

The tamping instrument **108** includes measured markings **122** along its length. The markings **116** can be placed, for example, at one centimeter intervals, to correspond with the markings **118** on the cannula instrument **30**, so that the relative position of the tamping instrument **108** within the cannula instrument **30** can be gauged. Like the nozzle **106**, the markings **122** on the tamping instrument **108** includes a set point **178**, which indicates when the distal end of the tamping instrument **108** aligns with the distal end **36** of the cannula instrument **30**. Also like the nozzle **106**, the markings **122** on the tamping instrument **108** are consecutively numbered with positive numbers proximally of the set point **178** and with negative numbers distally of the set point **178**. The physician is thereby able to tell at a glance the location of the end of the tamping instrument **108**, in terms of how far beyond or short of the distal end **36** of the cannula instrument **30** it is. As FIG. **5** also shows, the end of the tamping instrument **108**, when made from a plastic material, can carry at least one radiopaque marker **210**, so that its position can be visualized from outside the body.

After withdrawal of the nozzle **106** from the cannula instrument **30**, residual material is left in the cannula instrument **30**. The purpose of the tamping instrument **108** is to displace the residual material out the distal end **36** of the cannula instrument **30** and into the cavity, to thereby fill the cavity without exerting undue pressure within the bone. The tamping instrument **108** thereby serves to clear residual material from the cannula instrument **30**, to assure that the desired volume of material is delivered into the cavity. The removal of residual material from the cannula instrument **30** by the tamping instrument **108** also prevents seepage of material into surrounding tissue regions upon removal of the cannula instrument **30**. The tamping instrument **108** also compacts the material uniformly within the cavity, again without undue pressure. Further details of these functions and results will be discussed later.

IV. The Kit

As FIGS. **1** and **2** show, in the illustrated embodiment, the kit **12** includes an interior tray **126** made, e.g., from die cut cardboard, plastic sheet, or thermo-formed plastic material. The tray **126** includes spaced apart tabs **128**, which hold the various instruments in a secure position during sterilization and storage prior to use.

When packaged as a sterile assembly, the kit **12** includes an inner wrap **130**, which is peripherally sealed by heat or the like, to enclose the tray **126** from contact with the outside environment. One end of the inner wrap includes a conventional peal-away seal **132**, to provide quick access to the tray **126** at the instant of use, which preferably occurs in a sterile environment, such as within an operating room.

When packaged as a sterile assembly, the kit **12** also includes an outer wrap **134**, which is also peripherally sealed by heat or the like, to enclosed the inner wrap **130**. One end of the outer wrap includes a conventional peal-away seal **136**, to provide access to the inner wrap **130** and its contents. The outer wrap **134** can be removed from the inner wrap in anticipation of imminent use, without compromising sterility of the contents of the kit **12**.

As FIG. **2** shows, each inner and outer wrap **130** and **134** includes a peripherally sealed top sheet **138** and bottom sheet **140**. In the illustrated embodiment, the top sheet **138** is made of transparent plastic film, like polyethylene or MYLAR™ material, to allow visual identification of the contents of the kit **12**. The bottom sheet **140** is made from a material that is permeable to ETO sterilization gas, e.g., TYVEK™ plastic material (available from DuPont).

In the illustrated embodiment, the tray **126** presents the instruments groups **14**, **16**, and **18** in an ordered, organized layout, which is arranged to aid the physician in carrying out the intended procedure. For example, the layout of the tray **126** can present the instruments groups **14**, **16**, and **18** in top-to-bottom order, according to sequence of intended use. For example, in a typical bone access procedure (as will be demonstrated in greater detail later), the stylet **22** and stylus **24** of the spinal needle assembly **20** are deployed first, followed by the guide pin instrument **26**, followed by the obturator instrument **28**, then the cannula instrument **30**, then the drill bit instrument **32**, then the cavity forming instrument **76**, then the syringe **104** and nozzle **106** instruments, and lastly the tamping instrument **108**. Accordingly, the tray **126** packages these instruments and components in a top-to-bottom order, with the spinal needle assembly **20** topmost, the guide pin instrument **26** next, the obturator instrument **28** next, and so on, with the tamping instrument **108** lowermost on the tray **126**.

In this layout, the handle **60** is packaged to the side of the access instrument group **14**. The tray **126** can include written labels (not shown) identifying the components contained in the kit **12**.

The kit **12** also preferably includes in the tray **126** directions **144** for using the contents of the kit **12** to carry out a desired procedure. An exemplary procedure which the directions **144** can describe will be explained later.

When packaged as a sterile assembly, the directions **144** can also include the statement "For Single Patient Use Only" (or comparable language) to affirmatively caution against reuse of the contents of the kit **12** whose performance characteristics and efficacy degrade after a single use. The spinal needle assembly **20**, the cavity forming instrument **76**, and the material introducing instruments **104**, **106**, and **108** should, for these reasons, be used but a single time and then discarded. The directions **144** also preferably affirmatively instruct against resterilization of at least these contents of kit **12**, and also instructs the physician to dispose of at least these contents of the kit **12** upon use in accordance with applicable biological waste procedures.

The presence of the instrument groups **14**, **16**, and **18** packaged in the sterile kit **12** verifies to the physician that the contents are sterile and have not been subjected to prior use. The physician is thereby assured that the instrument groups meet established performance and sterility specifications.

It should be appreciated that the various instruments contained in the kit **12** can be packaged into several, smaller functional kits. For example, a first kit can package the access instrument group **14**, a second kit can package the cavity forming instrument group **16**, and a third kit can package the material introduction instrument group **18**. FIGS. **1** and **2** illustrate one of many different possible embodiments.

V. Illustrative Use of the System

The following describes use of the instrument groups **14**, **16**, and **18** packaged in the kit **12** in the context of treating bones. This is because the instruments of the groups **14**, **16**, and **18** can be advantageously used for this purpose. Still, it should be appreciated that one or more of the instrument groups, used alone or in association with other instruments, can perform other diagnostic or therapeutic functions in other interior regions of the body.

In particular, the instrument groups **14**, **16**, and **18** will described with regard to the treatment of human vertebra. It should be appreciated, however, their use is not limited to human vertebrae. The instrument groups **14**, **16**, and **18** can be used in association with hand-held instruments in the treatment of diverse human or animal bone types.

A. The Vertebral Body

As FIGS. **6** and **7** show, a typical vertebra **146** includes a vertebral body **148**, which extends on the anterior (i.e., front or chest) side of the vertebra **146**. The vertebral body **148** has the shape of an oval disk. The vertebral body **148** includes an exterior formed from compact cortical bone **150**. The cortical bone **150** encloses an interior volume of reticulated cancellous, or spongy, bone **152** (also called medullary bone or trabecular bone).

The spinal cord **154** passes through the spinal canal **156** of the vertebra **146**. The vertebral arch **158** surrounds the spinal canal **156**. The pedicles **160** of the vertebral arch **158** adjoin the vertebral body **148**. The spinous process **162** extends from the posterior of the vertebral arch **158**, as do the left and right transverse processes **164**.

B. Treatment of a Vertebral Body

During a typical procedure, a patient lies on an operating table. The patient can lie face down on the table, or on either side, or at an oblique angle, depending upon the physician's preference.

The physician or surgical assistant removes the outer and inner wraps **130** and **134** of the kit **12**, exposing the tray **126** for use. The physician acquires the spinal needle assembly **20** from the tray **126**. As FIG. **8** shows, the physician introduces the spinal needle assembly **20** into soft tissue ST in the patient's back. Under radiologic or CT monitoring, the physician advances the spinal needle assembly **20** through soft tissue down to and into the targeted vertebra **146**. The physician will typically administer a local anesthetic, for example, lidocaine, through assembly **20**. In some cases, the physician may prefer other forms of anesthesia.

The physician directs the spinal needle assembly **20** to penetrate the cortical bone **150** and the cancellous bone **152** of the targeted vertebral body **148**. Preferably the depth of penetration is about 60% to 95% of the vertebral body **148**.

FIG. **8** shows gaining access to cancellous bone through the side of the vertebral body **148**, which is called postero-lateral access. However, access may be indicated through a pedicle **160**, which is called transpedicular access. The type of access is based upon the objectives of the treatment or for other reasons, based upon the preference of the physician.

As FIG. **9** shows, after positioning the spinal needle assembly **20** in cancellous bone **152**, the physician holds the stylus **24** and withdraws the stylet **22**. The physician acquires the guide pin instrument **26** from the tray **126**. As FIG. **10** shows, while still holding the stylus **24**, the physician slides the guide pin instrument **26** through the stylus **24** and into the cancellous bone **152**. The physician now removes the stylus **24** (see FIG. **11**), leaving the guide pin instrument **26** deployed within the cancellous bone **152**.

The physician next acquires the obturator instrument **28** and the handle **60** from the tray **126**. The physician slides the obturator instrument **28** over the guide pin instrument **26**, distal end first. The physician slides the guide pin instrument **26** through the first passage **72** and the first socket **64** of the handle **60**. As FIG. **12** shows, the physician slides the handle **60** along the guide pin instrument **26** toward the tapered flange **40** of the obturator instrument **28**, until achieving a running slip-fit between the first socket **64** and the tapered flange **40**, in the manner previously described. The obturator instrument **28** is now ready for use.

FIG. **12** shows, the physician makes a small incision I in the patient's back. The physician twists the handle **60** while applying longitudinal force to the handle **60**. In response, the surface **38** of the obturator instrument **28** rotates and penetrates soft tissue ST through the incision I. The physician may also gently tap the handle **60**, or otherwise apply appropriate additional longitudinal force to the handle **60**, to advance the obturator instrument **28** through the soft tissue along the guide pin instrument **26** down to the entry site (see FIG. **13**). The physician can also tap the handle **60** with an appropriate striking tool to advance the surface **30** of the obturator instrument **28** into the side of the vertebral body **148** to secure its position (as FIG. **13** shows).

The physician next slides the handle **60** along the guide pin instrument **26** away from the obturator instrument **28** to disengage the tapered flange **40** from the first socket **64**. The physician then proceeds to slide the handle **60** completely off the guide pin instrument **26**.

The physician acquires the cannula instrument **30** from the tray **126**. As FIG. **14** shows, the physician slides the cannula instrument **30** over the guide pin instrument **26**, distal end first, and, further, over the obturator instrument **28**, until contact between the end surface **48** and soft tissue tissue ST. The physician now slides the guide pin instrument **26** and obturator instrument **26** through the second passage **74** and second socket **66** of the handle **60**. The physician slides the handle **60** toward the tapered fitting **50** of the cannula instrument **30** until a running slip-fit occurs between the second socket **66** and the tapered fitting **50**, as previously described. The cannula instrument **30** is now ready for use.

As FIG. **14** shows, the physician applies appropriate twisting and longitudinal forces to the handle **60**, to rotate and advance the cannula instrument **30** through soft tissue ST along the obturator instrument **28**. As FIG. **15** shows, when the end surface **48** of the cannula instrument **30** contacts cortical bone, the physician can appropriately tap the handle **60** with a striking tool to advance the end surface into the side of the vertebral body **148** to secure its position.

As FIG. **16** shows, the physician now withdraws the obturator instrument **28**, sliding it off the guide pin instrument **26**. This leaves the guide pin instrument **26** and the cannula instrument **30** in place, as FIG. **17** shows. The physician next slides the handle **60** along the guide pin instrument **26** away from the cannula instrument **30** to disengage the tapered fitting **50** from the second socket **66**. The physician then slides the handle **60** completely off the guide pin instrument **26**.

The physician now acquires the drill bit instrument **32** from the tray **126**. As FIG. **18** shows, the physician slides the

drill bit instrument **32** over the guide pin instrument **26**, distal end first, through the cannula instrument **30** until contact between the machined surface **54** and bone tissue occurs. As FIG. **18** also shows, the physician next leads the guide pin instrument **26** through the first passage **72** and first socket **64** of the handle **60**. The physician slides the handle **60** along the guide pin instrument **26** toward the tapered flange **56** of the drill bit instrument **32**, until a running slip-fit occurs between the first socket **64** and the tapered flange **56**, as previously described. The drill bit instrument **32** is now ready for use.

As shown by FIG. **18**, guided by X-ray (or another external visualizing system), the physician applies appropriate twisting and longitudinal forces to the handle **60**, to rotate and advance the cutting edge **54** of the drill bit instrument **32** to open a passage **166** (see FIG. **19**) through the bone tissue and completely into the cancellous bone **152**. The drilled passage **166** preferable extends no more than 95% across the vertebral body **148**.

The physician now slides the handle **60** along the guide pin instrument **26** away from the drill bit instrument **32** to disengage the tapered flange **56** from the first socket **64**. The physician, further, slides the handle **60** completely off the guide pin instrument **26**.

The physician can now remove the drill bit instrument **32** and the guide pin instrument **26**, leaving only the cannula instrument **30** in place. The passage **166** made by the drill bit instrument **32** remains. Subcutaneous access to the cancellous bone **152** has been accomplished.

The physician can now acquire the cavity forming instrument from the tray **126**. As FIG. **20** shows, the physician can advance the expandable structure **86** through the cannula instrument **30** and passage **166** into the interior volume of the vertebral body **148**, as FIG. **21** also shows. The structure **86** is in its normally collapsed and not expanded condition during deployment. The stylet **96** or **102** is inserted in the lumen **94** of the catheter tube **78** to provide added stiffness to the structure **86** while being passed through the cannula instrument **30**.

As shown in phantom lines in FIG. **20**, the physician can, if desired, reconnect the handle **60** to the cannula instrument **30**, to help stabilize the cannula instrument **30** while deploying the structure **86**. The second passage **74** of the handle accommodates the catheter tube **78** and the structure **86**, when collapsed.

As FIG. **21** shows, the structure **86** is oriented in the desired way in the passage **166**. As before explained, the bent stylet **102** can aid in this task. Before, during, or after the orientation process, the stylet **96** or **102** can be withdrawn (as FIG. **21** shows), to open the lumen **94** for use to pass a rinsing liquid or negative aspiration pressure.

Sterile liquid is conveyed under pressure from the source **92** through the lumen **88** into the structure **86**. As FIG. **22** shows, the structure **86** expands inside bone. Expansion of the structure **86** compresses cancellous bone **152** in the vertebral body **148**.

The compression forms an interior cavity **168** in the cancellous bone **152**. As FIG. **23** shows, subsequent collapse and removal of the structure **86** leaves the cavity **168** in a condition to receive a filling material.

The compaction of cancellous bone **152** can also exert interior force upon cortical bone, making it possible to elevate or push broken and compressed bone back to or near its original prefracture, or other desired, condition.

Upon formation of the cavity **168**, the physician acquires the syringe **104** and injection nozzle **106** from the kit **12**. As FIG. **24** shows, the physician fills the syringe chamber **110** with the desired volume of filling material **170**. As FIG. **25** shows, the physician attaches the nozzle **106** to the filled syringe **104**. As FIG. **26** shows, the physician inserts the nozzle **106** a selected distance beyond the distal end **36** of the cannula instrument **30** and into the cavity, guided by the markings **116**.

As shown in phantom lines in FIG. **26**, the handle **60** can remain attached to the cannula instrument **30** to provide stability, as the second passage **74** of the handle accommodates the nozzle **106**.

As FIG. **27** shows, the physician manually advances the piston **112** to cause the material **170** to flow through and out of the nozzle **106** and into the cavity. As material **170** fills the cavity, the physician withdraws the nozzle from the cavity and into the cannula instrument **30**. The cannula instrument **30** channels the material **170** flow toward the cavity **168**. As FIG. **28** shows, the cement material **170** flows in a stream into the cavity **168**.

If the selected material **170** is bone cement, the cement material **170** is placed into the syringe chamber **110** shortly after it is mixed from two materials (e.g., in an external mixing device), while it is in a low viscosity, relatively free flowing liquid state, like a thin pancake batter. In time (e.g., about two minutes after mixing), the consistency of the cement material **170** will change to a substantially putty-like character.

The physician operates the syringe **104** to expel the cement material **170** from the chamber, through the nozzle **106**, first into the cavity and then into the cannula instrument **30**. Typically, at the end of the syringe injection process, material **170** should extend from the cavity and occupy about 40% to 50% of the cannula instrument **30**.

When a desired volume of cement is expelled from the syringe **104**, the physician withdraws the nozzle **106** from the cannula instrument **30**, as FIG. **29** shows. The physician may first rotate the syringe **104** and nozzle **106**, to break loose the material **170** in the nozzle **106** from the ejected bolus of material **170** occupying the cannula instrument **30**.

The physician acquires the tamping instrument **108** from the kit **12**. As FIG. **30** shows, the physician advances the tamping instrument **108** through the cannula instrument **30**. As phantom lines in FIG. **30** show, the handle **60** can remain attached to the cannula instrument **30** to provide stability, as the second passage **74** of the handle accommodates the tamping instrument **108**.

The distal end of the tamping instrument **108** contacts the residual volume of cement material **170** in the cannula instrument **30**. As FIGS. **30** and **31** show, advancement of the tamping instrument **108** displaces progressively more of the residual material **170** from the cannula instrument **30**, forcing it into the cavity **168**. The flow of material **170** into the cavity **168**, propelled by the advancement of the tamping instrument **108** in the cannula instrument **30**, serves to uniformly distribute and compact the material **170** inside the cavity **168**, without the application of undue pressure.

The use of the syringe **104**, nozzle **106**, and the tamping instrument **108** allows the physician to exert precise control when filling the cavity with material **170**. The physician can immediately adjust the volume and rate of delivery according to the particular local physiological conditions encountered. The application of low pressure (i.e., no greater than 360 psi), which is uniformly applied by the syringe **104** and the tamping instrument **108**, allows the physician to respond

to fill volume and flow resistance conditions in a virtually instantaneous fashion. The chance of overfilling and leakage of material **170** outside the cavity is significantly reduced.

When the physician is satisfied that the material **170** has been amply distributed inside the cavity **168**, the physician withdraws the tamping instrument **108** from the cannula instrument **30**. The physician preferably first twists the tamping instrument **108** to cleanly break contact with the material **170**. The handle **60** can now be removed and the cannula instrument **30** withdrawn, as FIG. **32** shows. The incision site is sutured closed. The bone treatment procedure is concluded.

Eventually the material **170**, if cement, will harden a rigid state within the cavity **168**. The capability of the vertebral body **148** to withstand loads is thereby improved.

The selected material **170** can be an autograft or allograft bone graft tissue collected in conventional ways. For example, the graft material can be in paste form, as described by Dick, "Use of the Acetabular Reamer to Harvest Autogenic Bone Graft Material: A Simple Method for Producing Bone Paste," *Archives of Orthopaedic and Traumatic Surgery* (1986), 105: 235–238, or in pellet form, as described by Bhan et al, "Percutaneous Bone Grafting for Nonunion and Delayed Union of Fractures of the Tibial Shaft, " *International Orthopaedics* (*SICOT*) (1993) 17: 310–312, both of which are incorporated herein by reference. Alternatively, the bone graft tissue can be obtained using a Bone Graft Harvester, which is commercially available from SpineTech. Using a funnel, the paste or pellet graft tissue material is loaded into the cannula instrument **30**. The tamping instrument **108** is then advanced into the cannula instrument **30** in the manner previously described, to displace the paste or pellet graft tissue material out of the cannula instrument **30** and into the cavity.

The selected material **170** can also comprise a granular bone material harvested from coral, e.g., ProOsteon™ calcium carbonate granules, available from Interpore. The granules are loaded into the cannula instrument **30** using a funnel and advanced into the cavity using the tamping instrument **108**.

The selected material **170** can also comprise demineralized bone matrix suspended in glycerol (e.g., Grafton™ allograft material available from Osteotech), or SRS™ calcium phosphate cement available from Novian. These viscous materials, like the bone cement previously described, can be loaded into the syringe **104** and injected into the cavity using the nozzle **106**, which is inserted through the cannula instrument **30** into the cavity. The tamping instrument **108** is used to displace residual material from the cannula instrument **30** into the cavity, as before described.

The selected material **170** can also be in sheet form, e.g. Collagraft™ material made from calcium carbonate powder and collagen from bovine bone. The sheet can be rolled into a tube and loaded by hand into the cannula instrument **30**. The tamping instrument **108** is then advanced through the cannula instrument, to push and compact the material in the cavity.

VI. Alternative Embodiments

The use of low pressure delivery of material **170** frees the system **10** from the need to accommodate relatively large diameter, high pressure delivery devices. The interior diameter of the cannula instrument **30** can be downsized accordingly, thereby minimizing the dimensions of the subcutaneous pathway to gain access to the targeted bone region.

Typically, when low pressure material injection instruments are used, the largest tool that the reduced-diameter cannula instrument must accommodate is the expandable cavity-forming structure **82**. The structure **82** presents a minimal profile during deployment, as it can be collapsed and, if desired, a lubricous coating may also be applied to the exterior of the structure **82** to facilitate its passage through the reduced-diameter cannula instrument.

A. Low Pressure Material Injection Instruments

FIG. **33** exemplifies low pressure material injection instruments **180** and **182** that function in association with a cannula instrument **184** having a reduced interior diameter, e.g. only about 3.4 mm or less.

One instrument **180** comprises a reduced-diameter nozzle. As FIG. **33** shows, the nozzle **180** is sized to pass through the reduced-diameter cannula instrument **184**, to thereby pass into bone in the manner previously shown in FIG. **26**. The reduced-diameter nozzle **180** connects by a threaded connector **186** to the syringe **104**. For material strength, despite its reduced dimension, the nozzle **180** is preferably formed from a rigid metal material, e.g., stainless steel.

As FIG. **33** shows, the reduced-diameter nozzle **180** also includes measured markings **188** along its length, as previously described. The markings **188** include a set point **190**, as previously described, which aligns with the proximal end of the cannula instrument **184** when the distal ends of the cannula instrument **184** and the nozzle **180** align.

The other reduced diameter instrument **182** comprises a stylet, which is sized to pass through the interior bore of the nozzle **180**. The stylet **182** includes a handle **192**, which rests on the proximal connector **186** of the nozzle **180** when the stylet **182** is fully inserted into the nozzle **180**. When the handle **192** is rested, the distal ends of the stylet **182** and nozzle **180** align. The presence of the stylet **182** inside the nozzle **180** closes the interior nozzle bore.

In use, the nozzle **180** is coupled to the syringe **104** and inserted through the cannula instrument **184** into the material-receiving cavity **168** formed in cancellous bone, in the same manner shown in FIG. **26**. Material in the syringe **104** is injected at low pressure through the nozzle **180** into the cavity **168**. As before explained, as the cavity **168** progressively fills with material, the nozzle **180** is withdrawn back into the cannula instrument **184**. Typically, when the injection of material is completed, material extends from the cavity **168** and occupies about 40% to 50% of the cannula instrument **184**.

At this point, the nozzle **180** can be fully withdrawn from the cannula instrument **184** and unthreaded from the syringe **104**. The stylet **182** can be advanced into the nozzle **180**, to bring the handle **192** at rest against the connector **186**, thereby clearing residual material from the nozzle **180**. The nozzle **180** and stylet can then be inserted as a nested unit into the cannula instrument **184**. Nested together, the nozzle **180** and stylet **182** form a tamping instrument. Upon advancement through the cannula instrument **184**, the nested nozzle **180** and stylet **182** displace residual material from the cannula instrument **184** into the cavity **168**, in generally the same manner as previously shown in FIGS. **30** and **31**, thereby uniformly compacting material within the cavity **168** in a controlled fashion and without undue pressure.

Alternatively, a single-piece tamping instrument, separate from the nozzle **180**, can be provided, downsized to fit through the reduced-diameter cannula instrument **184**. In this embodiment, the stylet **182** is not necessary, unless it is desired to reclaim material from the nozzle.

B. Cavity Forming Instrument

FIG. **34** shows a cavity forming instrument **194** intended to be deployed through the reduced-diameter cannula instru-

ment **184**, shown in FIG. **33**. In many respects, the instrument **194** is like the instrument **76**, previously described and shown in FIG. **4A**, and common reference numerals will be assigned to common structural elements. The instrument **184** includes a flexible catheter tube **78** having a proximal end **80** and a distal end **82**. The proximal end **80** carries a handle grip **84**, and the distal end **82** carries an expandable structure **86**, which, when deployed in bone, compacts cancellous bone and forms the cavity **168**.

Unlike the previously-described instrument **76**, the instrument **194** carries an introducer sleeve **196**. The introducer sleeve **196** slides along the catheter tube **78** between the handle grip **84** and the expandable structure **86**. The introducer sleeve **196** includes a tubular main body **198** with a forward collar **200** and a rear collar **202**.

The introducer sleeve **196** normally occupies an advanced position on the instrument **194**, as shown in FIG. **35**. In this position, the main body **198** overlies and surrounds the expandable structure **86**. The main body **198** is sized to compress the structure **86** to an outside diameter that is slightly less than the interior diameter of the reduced-diameter cannula instrument **184**.

As FIG. **35** shows, when the introducer sleeve **196** occupies the advanced position, the forward collar **200** extends beyond the distal end of the compressed expandable structure **82**. As FIG. **36** shows, in this position, the forward collar **200** presents itself for engagement with the proximal end **204** of the cannula instrument **184**. The forward collar **200** is sized to have an interior diameter that makes friction-fit engagement about the proximal end **204** of the cannula instrument **184**.

As FIG. **36** shows, when it is time to deploy the expandable structure **86** through the cannula instrument **184**, the physician engages the forward collar **200** of the introducer sleeve **196** in a friction fit about the proximal end **204** of the cannula instrument **184**. As FIG. **37** shows, advancing the catheter tube **78** moves the compressed structure **86** through the main body **198** of the sleeve **196** and into the bore of the cannula instrument **184**. The engagement of the forward collar **200** about the proximal cannula end **204** aligns the axis of the structure **86** with the axis of the cannula instrument **184**, while compressing the structure **86** to a diameter smaller than the interior of the cannula instrument **184**. Upon advancement of the catheter tube **78**, the introducer sleeve **196** guides the structure **86** into the cannula instrument **194** without tearing or other damage.

Once the expandable structure **86** is advanced through the cannula instrument **184** and into bone, the physician can slide the introducer sleeve **196** rearward away from the proximal cannula end **204**, to break the friction fit between the end **204** and the forward sleeve. As FIG. **34** shows, the rear collar **202** of the sleeve **196** is sized to make a snap fit engagement about a stem **206**, which surrounds the catheter tube **78** near the handle **84**. The snap fit engagement stabilizes the position of the sleeve **196** during subsequent use and manipulation of the cavity-forming instrument **194**.

The features of the invention are set forth in the following claims.

We claim:

1. Apparatus for introducing material into bone through a subcutaneous cannula, the apparatus including a subcutaneous cannula, a delivery device to convey the material at a delivery pressure of no greater than about 360 psi, a nozzle instrument capable of advancement into the subcutaneous cannula and comprising a proximal fitting to couple the nozzle instrument to the delivery device and a nozzle terminus through which the material conveyed by the delivery device enters bone at the delivery pressure, and a tamping instrument capable of advancement into the subcutaneous cannula and having a tamping terminus which, during the advancement, urges material residing in the subcutaneous cannula into bone.

2. Apparatus according to claim **1**

wherein the nozzle instrument is made of a generally flexible material.

3. Apparatus according to claim **1**

wherein the nozzle instrument is made of a generally rigid material.

4. Apparatus according to claim **1**

wherein the delivery device comprises a syringe.

5. Apparatus according to claim **1**

wherein the tamping instrument includes markings to visually gauge the advancement of the tamping terminus through the subcutaneous cannula.

6. Apparatus according to claim **1**

wherein the tamping instrument includes at least one radiopaque marker.

7. Apparatus according to claim **1**

wherein the tamping instrument is made of a generally rigid material.

8. Apparatus according to claim **1**

wherein the nozzle instrument includes markings to visually gauge the advancement of the nozzle terminus through the subcutaneous cannula.

9. Apparatus according to claim **1**

wherein the nozzle instrument includes at least one radiopaque marker.

10. Apparatus according to claim **1** and further including a cavity forming instrument capable of advancement through the subcutaneous cannula to compress cancellous bone.

11. Apparatus according to claim **10**

wherein the cavity forming instrument includes an expandable structure.

12. Apparatus for introducing material into bone through a subcutaneous cannula, the apparatus including a subcutaneous cannula, a delivery device to convey the material at a delivery pressure of no greater than about 360 psi, a nozzle instrument capable of advancement into the subcutaneous cannula and comprising a proximal fitting to couple the nozzle instrument to the delivery device and a nozzle bore through which the material conveyed by the delivery device enters bone at the delivery pressure, and a stylet capable of advancement into the nozzle bore through the proximal fitting to close the nozzle bore and, with the nozzle instrument, forming a tamping instrument capable of advancement into the subcutaneous cannula to urge residual material from the subcutaneous cannula.

13. Apparatus according to claim **12**

wherein the nozzle instrument includes markings to visually gauge the advancement of the nozzle instrument through the cannula.

14. Apparatus according to claim **12**

wherein the delivery device comprises a syringe.

15. Apparatus for introducing material into bone through a subcutaneous cannula, the apparatus comprising a subcutaneous cannula, a delivery device to convey the material into the subcutaneous cannula at a delivery pressure of no greater than about 360 psi, and a tamping instrument having

a tamping terminus which, during advancement of the tamping instrument in the subcutaneous cannula, urges material residing in the subcutaneous cannula into bone.

16. Apparatus according to claim **15**

wherein the delivery device comprises a syringe.

17. Apparatus according to claim **15**

wherein the tamping instrument includes markings to visually gauge the advancement of the tamping terminus through the subcutaneous cannula.

18. Apparatus according to claim **15**

wherein the tamping instrument includes at least one radiopaque marker.

19. Apparatus according to claim **15**

wherein the tamping instrument is made of a generally rigid material.

20. Apparatus according to claim **15** and further including a cavity forming instrument capable of advancement through the subcutaneous cannula to compress cancellous bone.

21. Apparatus according to claim **15**

wherein the cavity forming instrument includes an expandable structure.

* * * * *