D-2

US006613054B2

(12) **United States Patent**
Scribner et al.

(10) **Patent No.: US 6,613,054 B2**
(45) **Date of Patent: *Sep. 2, 2003**

(54) **SYSTEMS AND METHODS FOR PLACING MATERIALS INTO BONE**

(75) Inventors: **Robert M Scribner**, Los Altos, CA (US); **Michael L Reo**, Redwood City, CA (US); **Mark A Reiley**, Piedmont, CA (US); **Ryan Boucher**, San Francisco, CA (US)

(73) Assignee: **Kyphon Inc.**, Sunnyvale, CA (US)

(*) Notice: Subject to any disclaimer, the term of this patent is extended or adjusted under 35 U.S.C. 154(b) by 0 days.

This patent is subject to a terminal disclaimer.

(21) Appl. No.: **09/804,107**

(22) Filed: **Mar. 12, 2001**

(65) **Prior Publication Data**

US 2001/0034527 A1 Oct. 25, 2001

Related U.S. Application Data

(62) Division of application No. 09/134,323, filed on Aug. 14, 1998, now Pat. No. 6,241,734.

(51) **Int. Cl.**[7] **A61B 17/58**
(52) **U.S. Cl.** **606/93**; 606/94
(58) **Field of Search** 606/88, 92–96, 606/100, 102, 105, 192, 193.7, 194; 206/219; 604/57, 58, 87

(56) **References Cited**

U.S. PATENT DOCUMENTS

4,005,527	A	2/1977	Wilson et al.	
4,919,153	A	4/1990	Chin	
5,013,318	A	5/1991	Spranza, III	
5,108,404	A	4/1992	Scholten et al.	
5,171,248	A	12/1992	Ellis	
5,312,333	A *	5/1994	Churinetz et al.	604/57
5,415,631	A *	5/1995	Churinetz et al.	604/57
5,468,245	A	11/1995	Vargas, III	
5,484,442	A	1/1996	Melker et al.	
5,514,137	A	5/1996	Coutts	
5,601,559	A	2/1997	Melker et al.	
5,658,310	A	8/1997	Berger	
5,741,261	A *	4/1998	Moskovitz et al.	606/61
5,824,087	A	10/1998	Aspden et al.	
5,919,196	A *	7/1999	Bobic et al.	606/96
5,972,015	A *	10/1999	Scribner et al.	604/20
5,989,260	A	11/1999	Yao	
5,997,581	A	12/1999	Khalili	
6,083,229	A *	7/2000	Constantz et al.	606/92
6,149,655	A *	11/2000	Constantz et al.	606/94
6,241,734	B1 *	6/2001	Scribner et al.	606/93

FOREIGN PATENT DOCUMENTS

DE	88 00197		6/1988
WO	WO 90/04364		5/1990
WO	WO 00/54705	*	9/2000

* cited by examiner

Primary Examiner—Pedro Philogene
(74) *Attorney, Agent, or Firm*—Ryan Kromholz & Manion, S.C.

(57) **ABSTRACT**

Systems and methods for delivering material into bone deploy a cannula through soft tissue to establish a subcutaneous path into bone. A material is introduced into bone through the cannula. The systems and methods advance a tamping instrument through the cannula to urge material residing in the cannula into bone. The introducing step delivers material at a pressure no greater than about 360 psi.

100 Claims, 19 Drawing Sheets

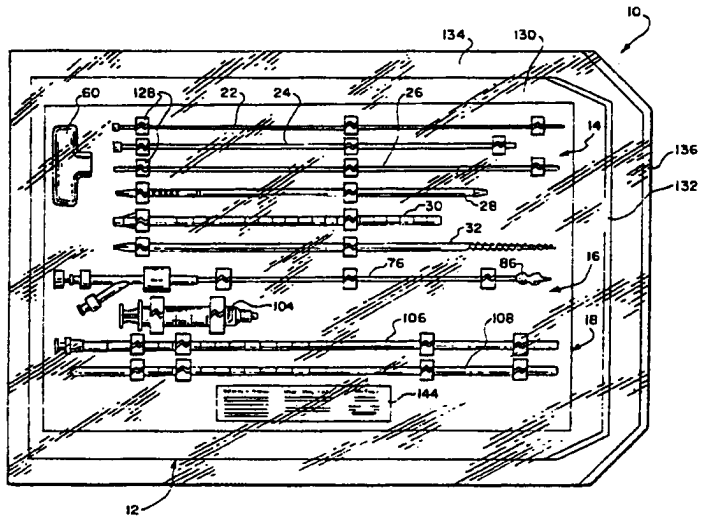

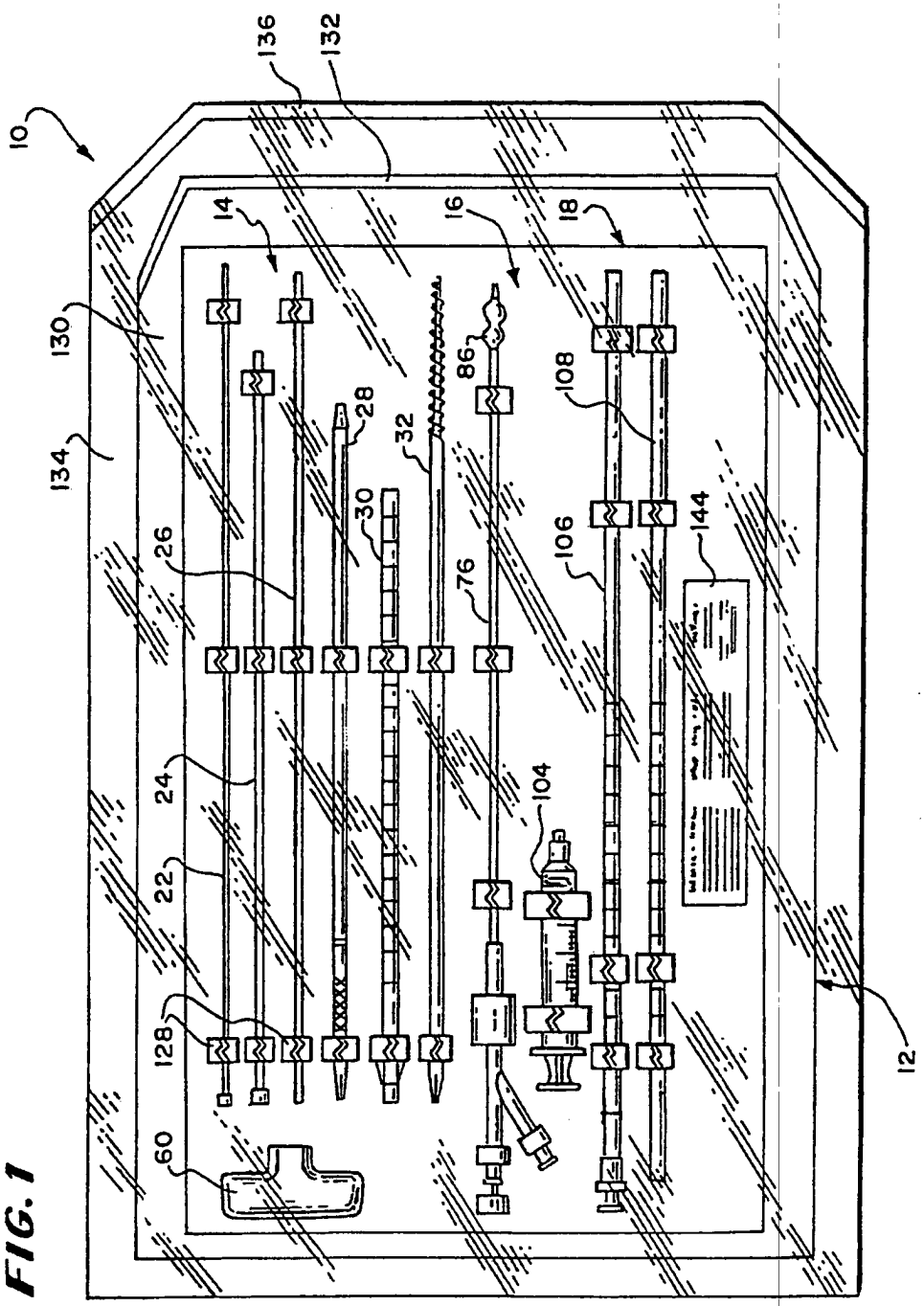
136
132
10
14
16
18
130
86
108
28
32
134
30
144
26
106
76
24
104
22
128
12
60

FIG. 1

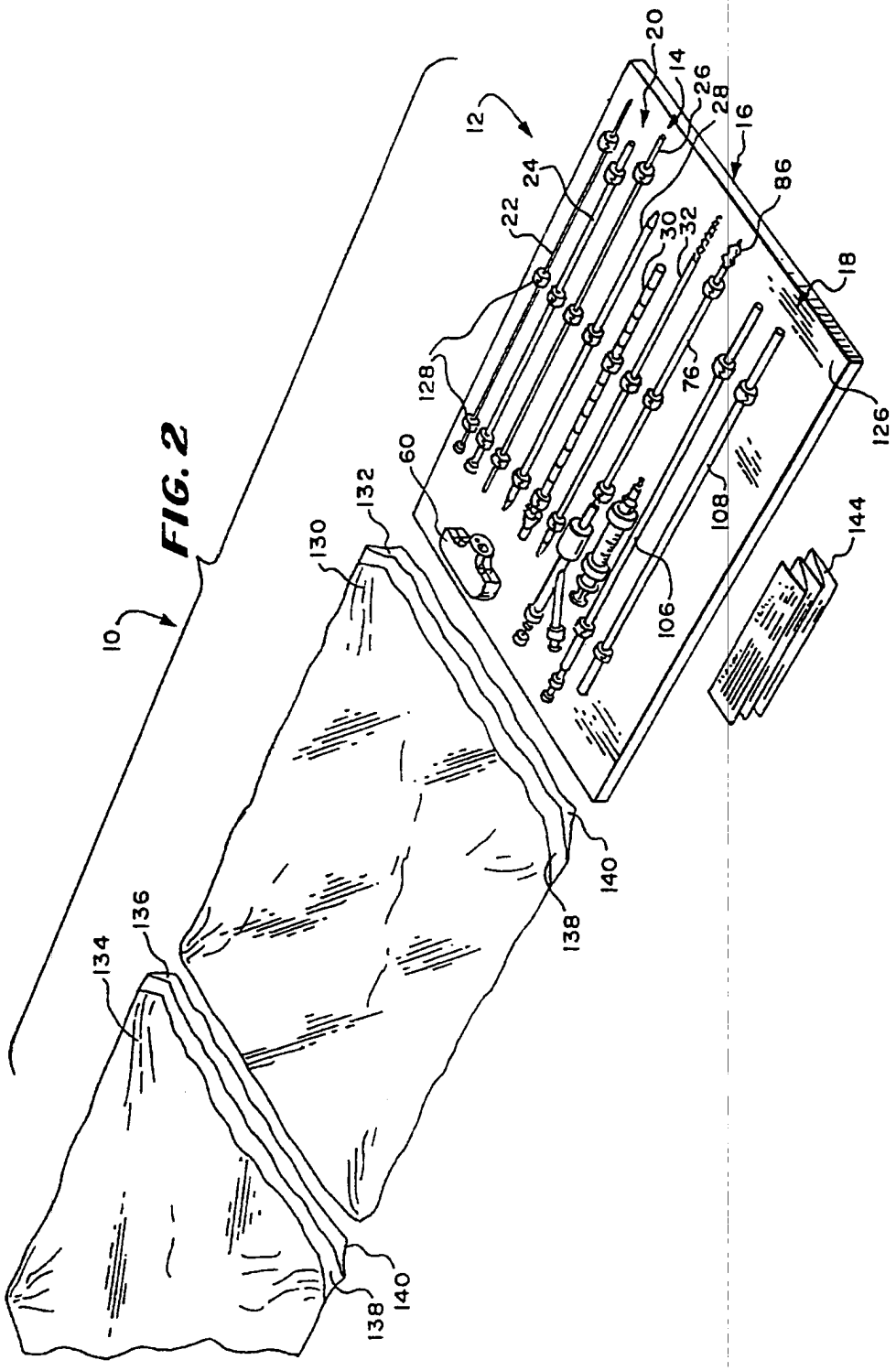
10
12
14
16
18
20
22
24
26
28
30
32
60
76
86
106
108
126
128
130
132
134
136
138
140
144

FIG. 2

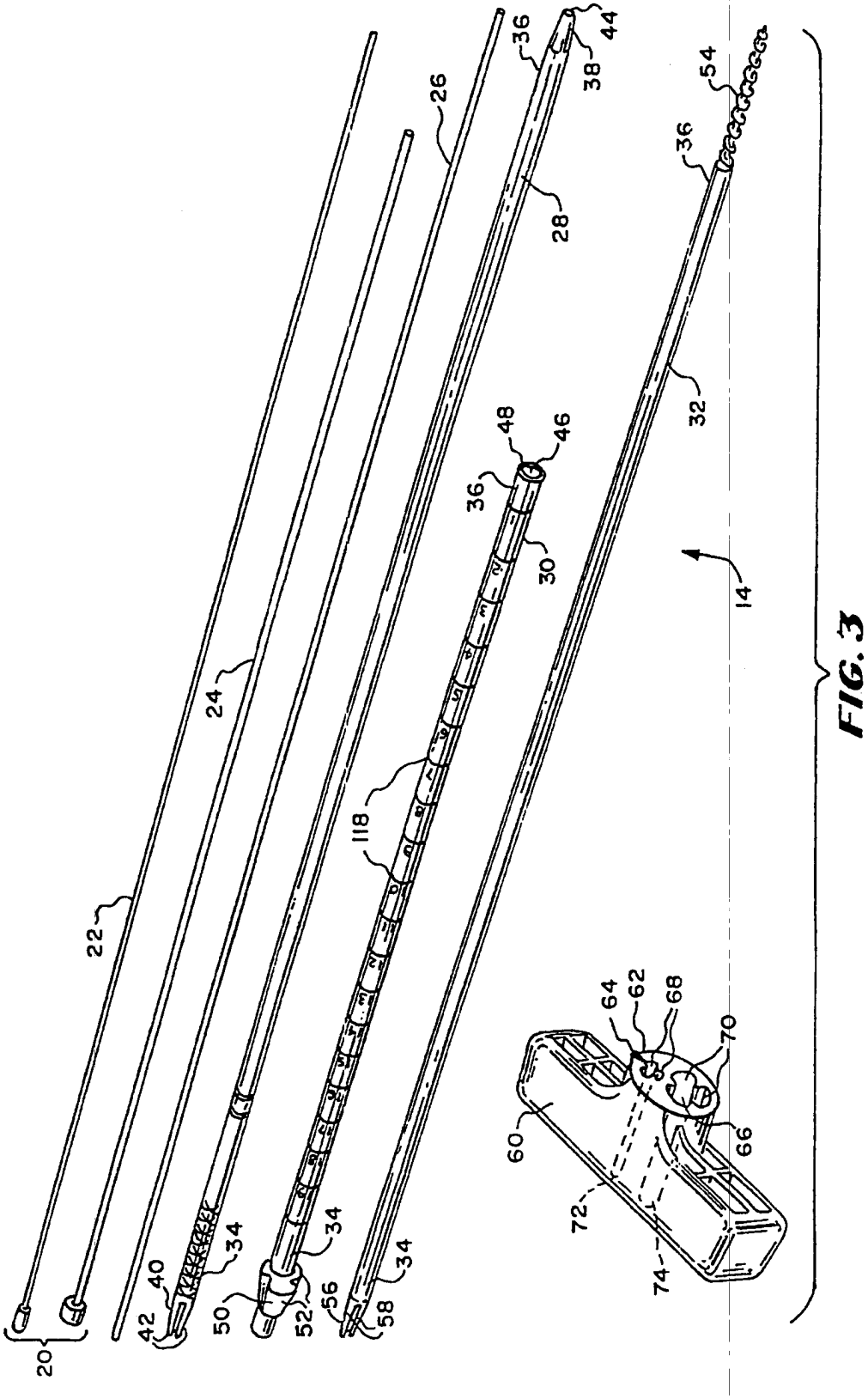
20
22
24
26
28
30
32
34
36
38
40
42
44
46
48
50
52
54
56
58
60
62
64
66
68
70
72
74
118
14

FIG. 3

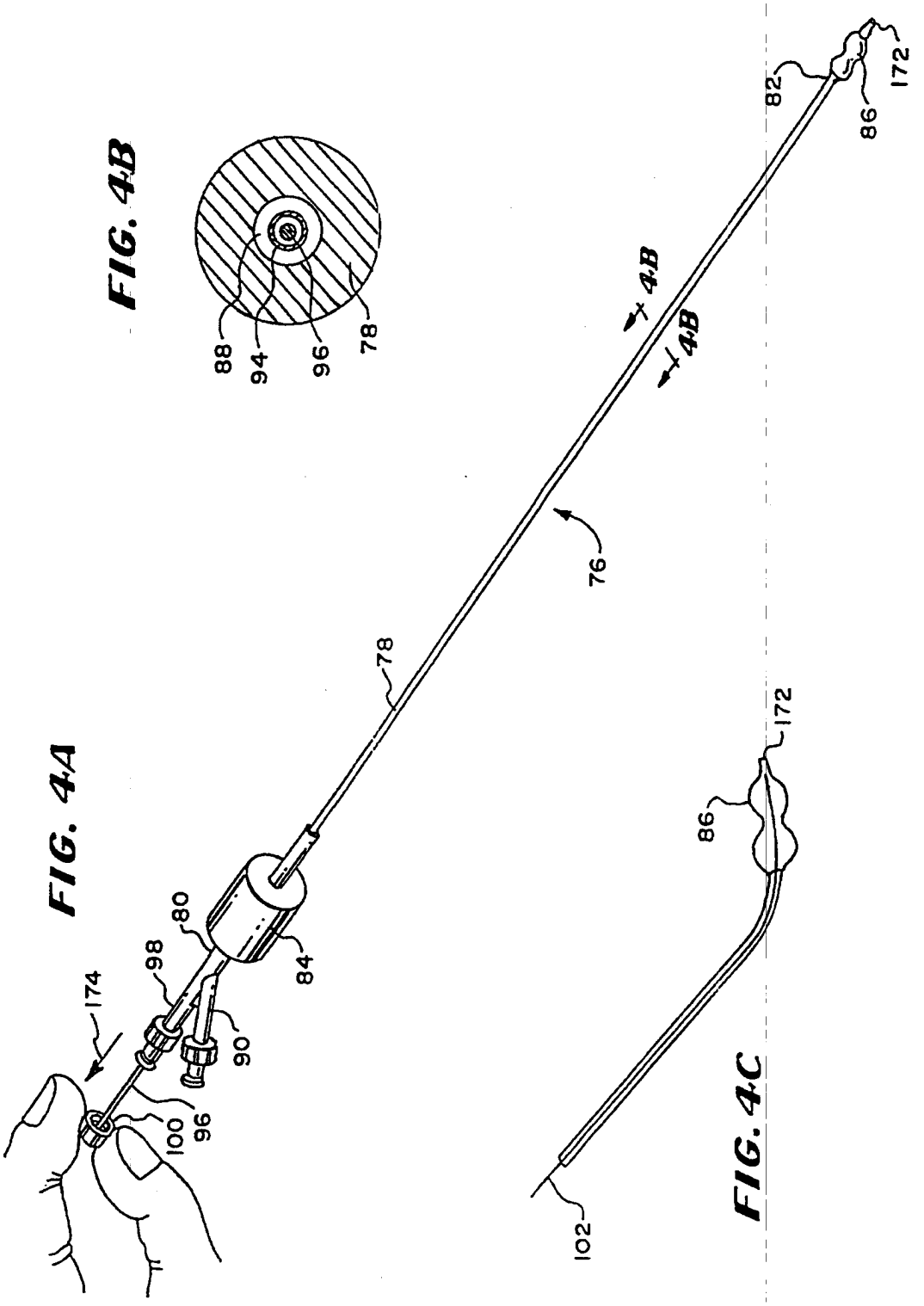
FIG. 4B
88
94
96
78
4B
4B
82
86
172
76
78
FIG. 4A
174
98
80
84
90
96
100
172
86
102
FIG. 4C

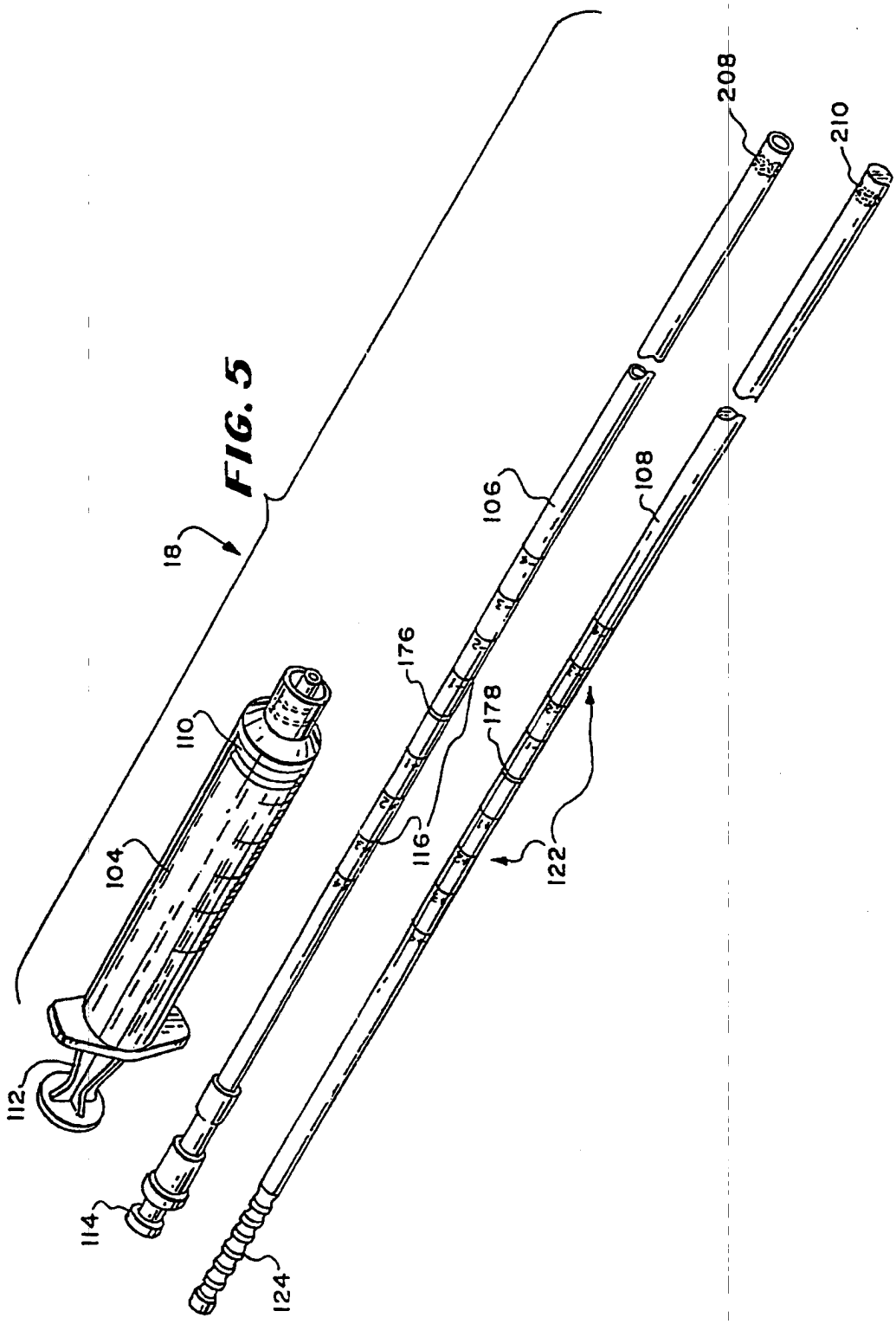

FIG. 5

FIG. 6

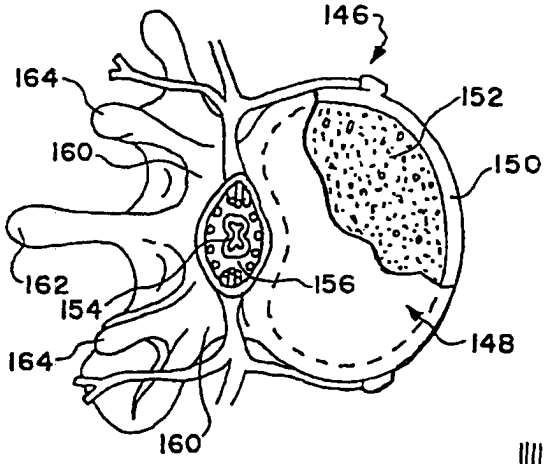

FIG. 7

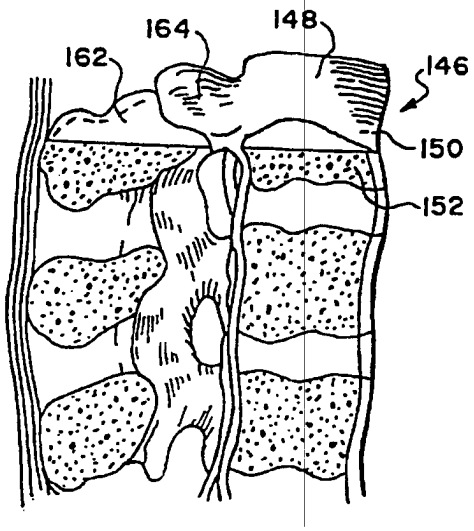

FIG. 8

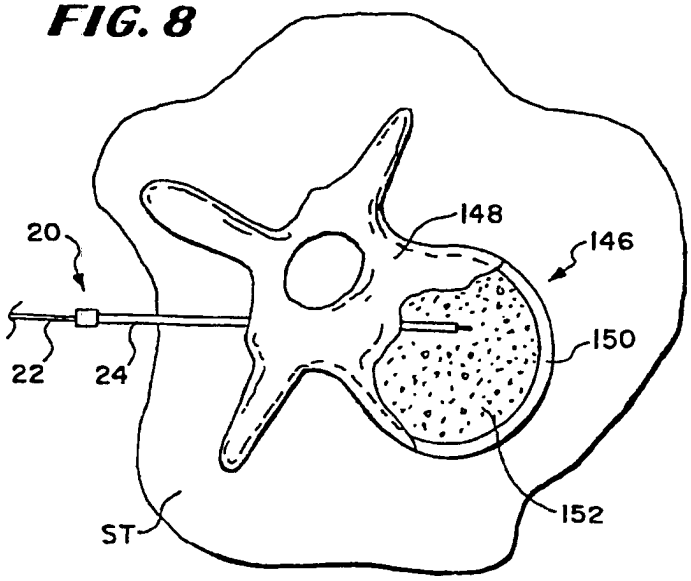

FIG. 9

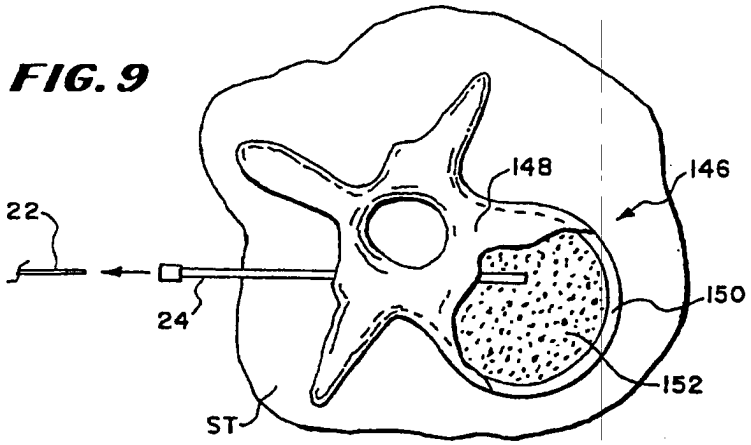

FIG. 10

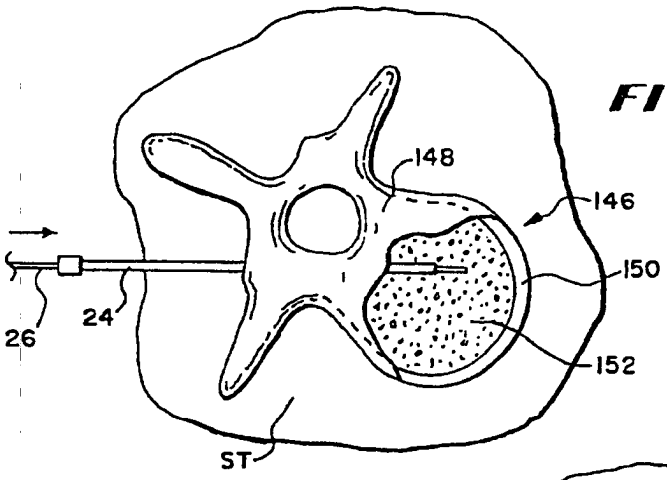

FIG. 11

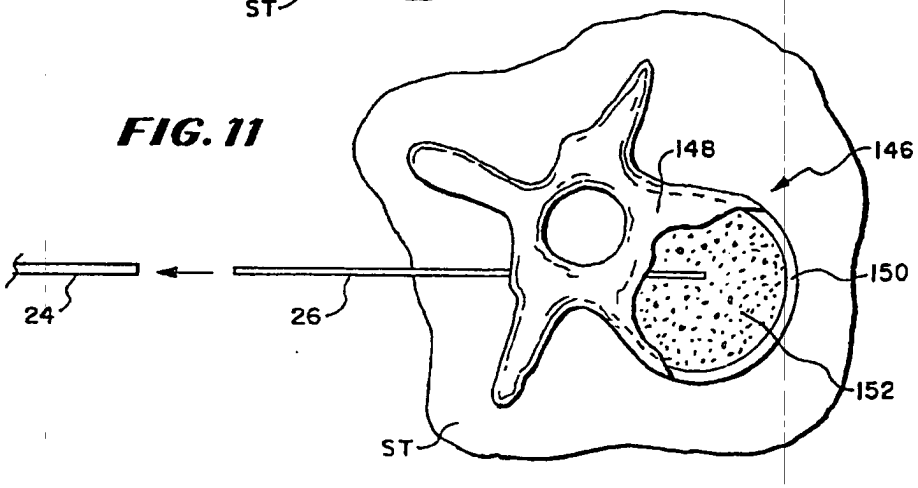

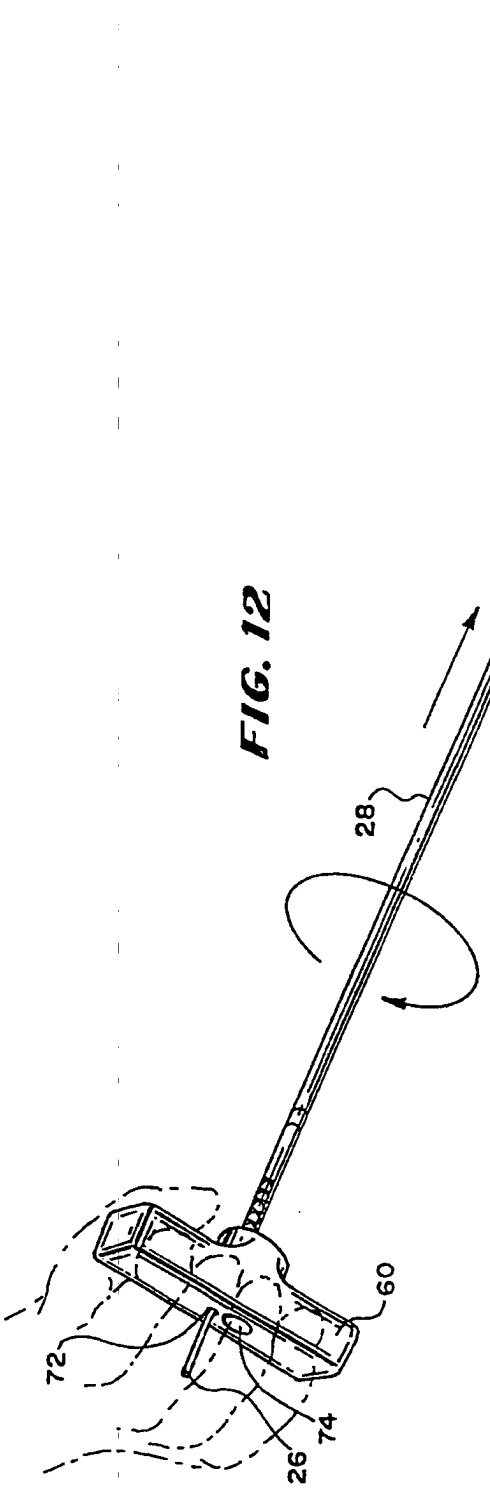

FIG. 12

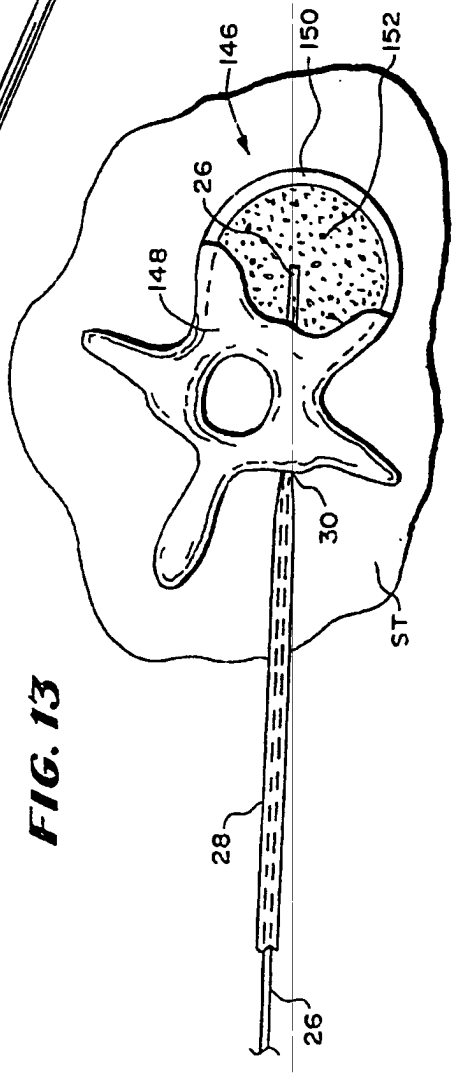

FIG. 13

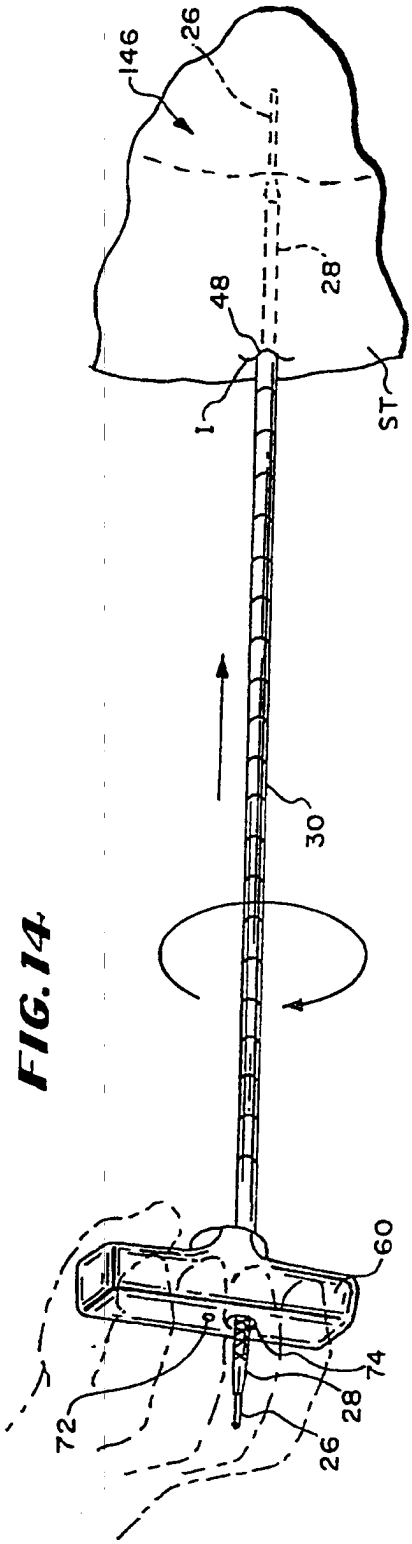

FIG. 14

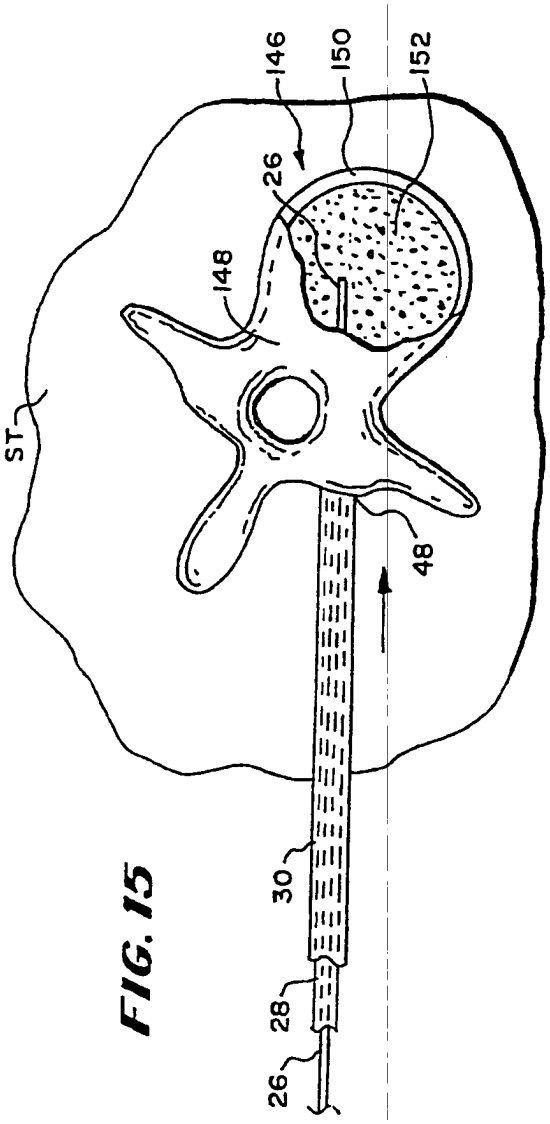

FIG. 15

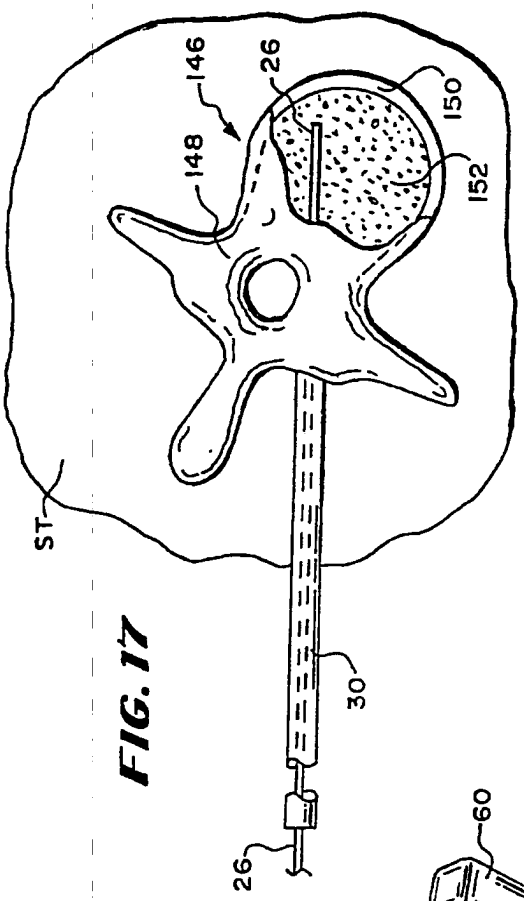

FIG. 17

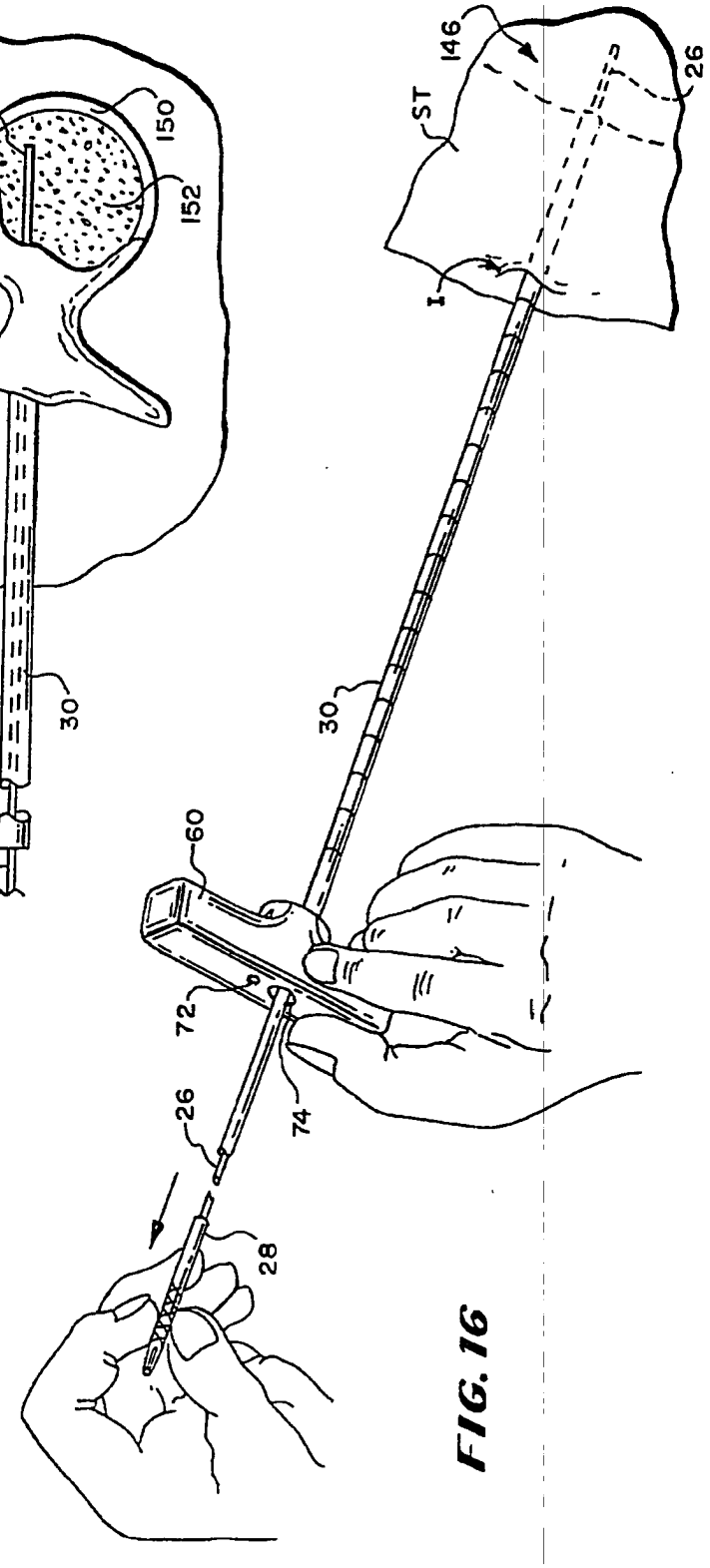

FIG. 16

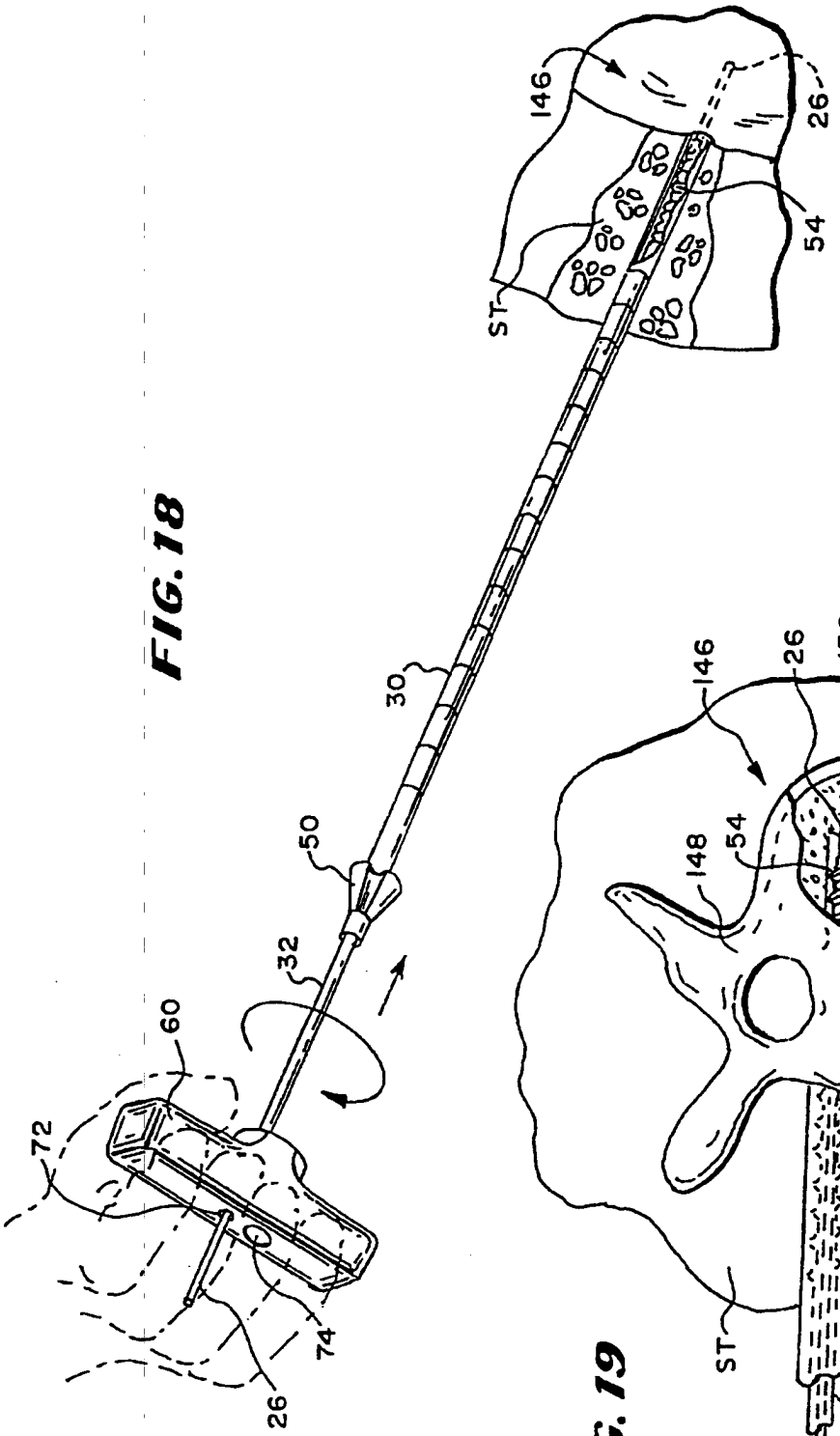
146
26
54
ST
30
50
32
60
72
74
26

FIG. 18

146
26
150
166
152
148
54
ST
30
32
26

FIG. 19

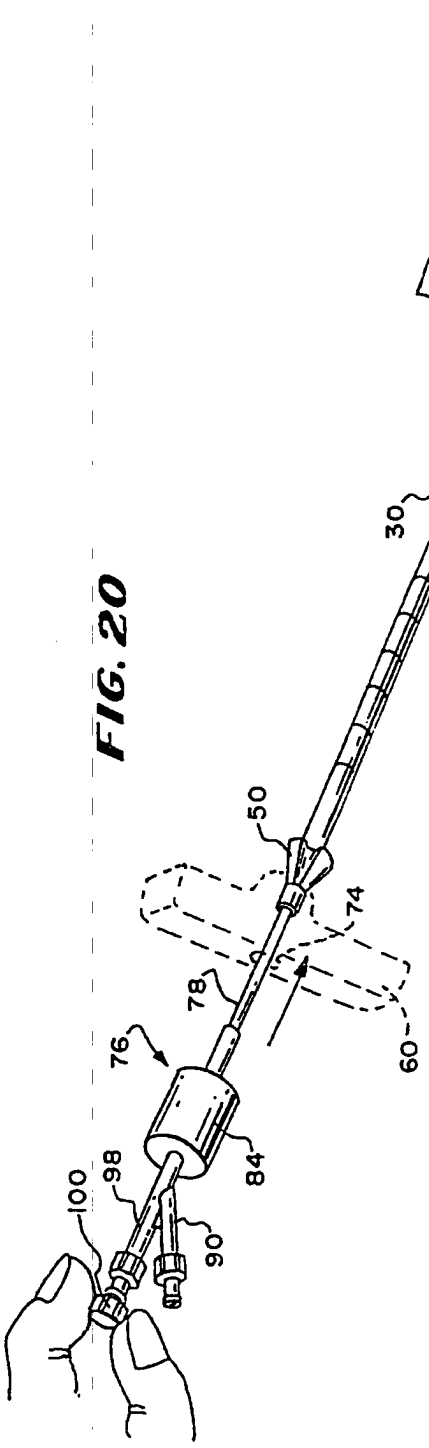
166
86
152
ST
30
50
74
78
76
60
84
98
100
90

FIG. 20

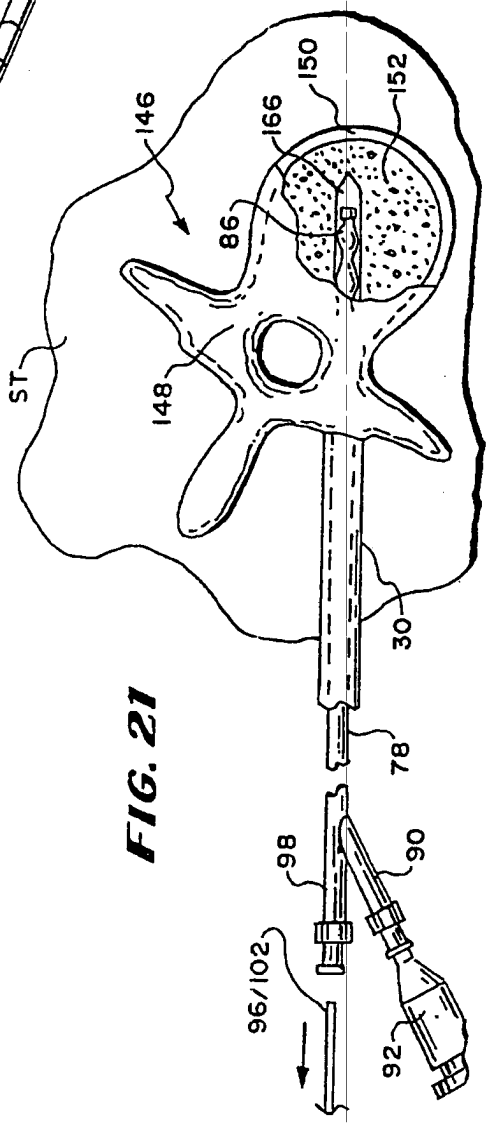
150
152
146
166
86
ST
148
30
78
98
90
96/102
92

FIG. 21

FIG. 22

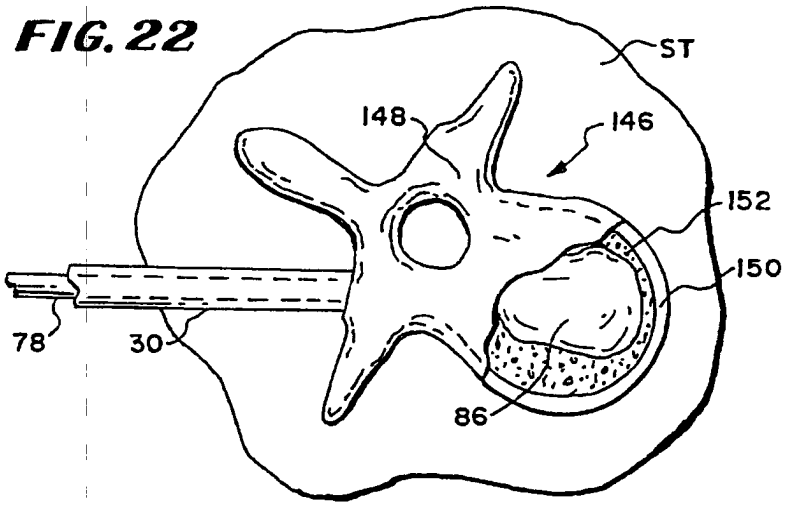

FIG. 23

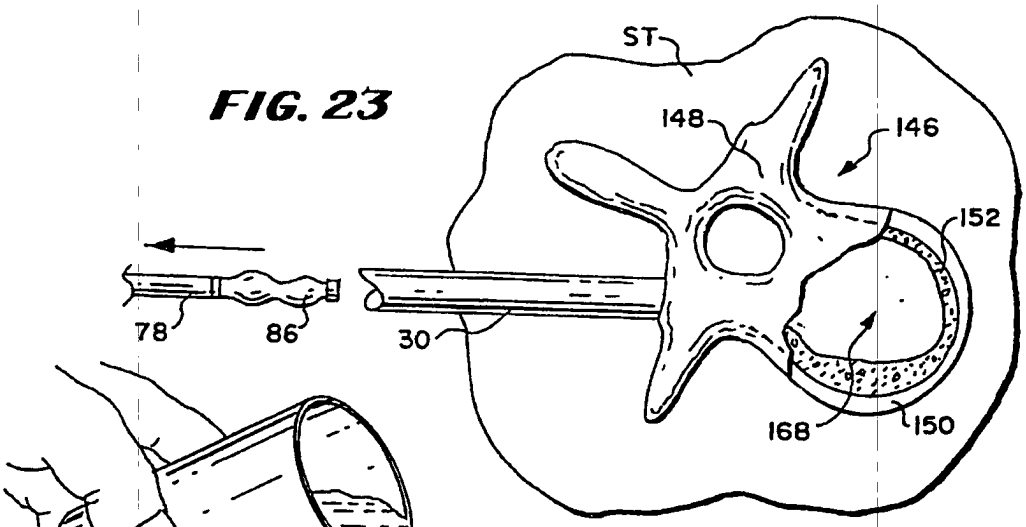

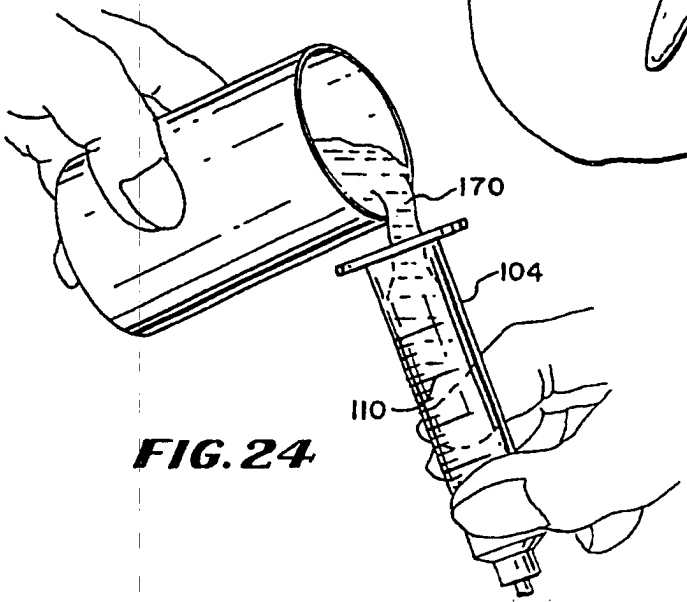

FIG. 24

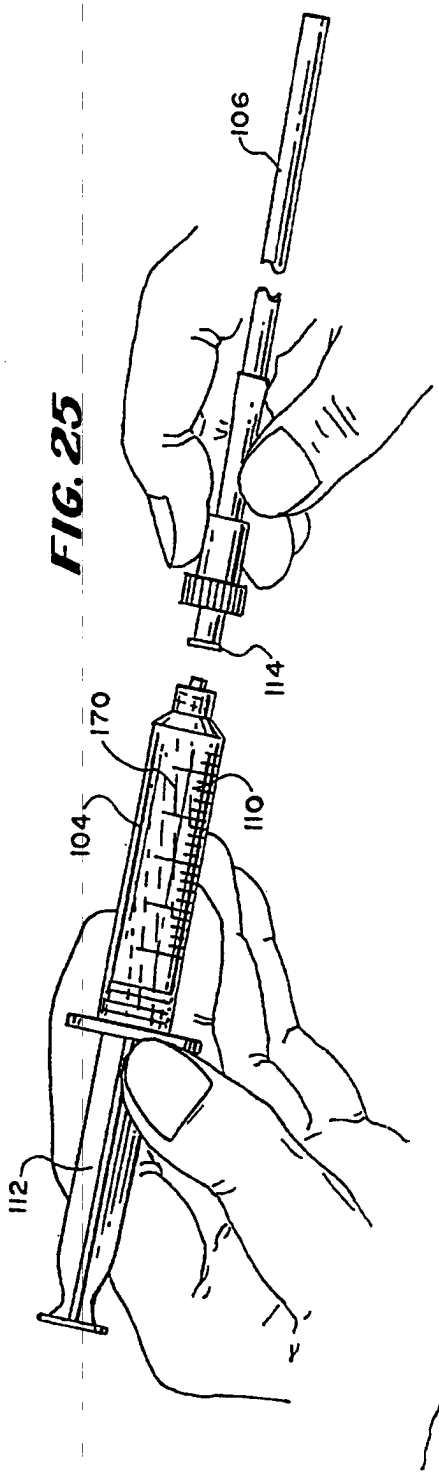
106
114
170
104
110
112

FIG. 25

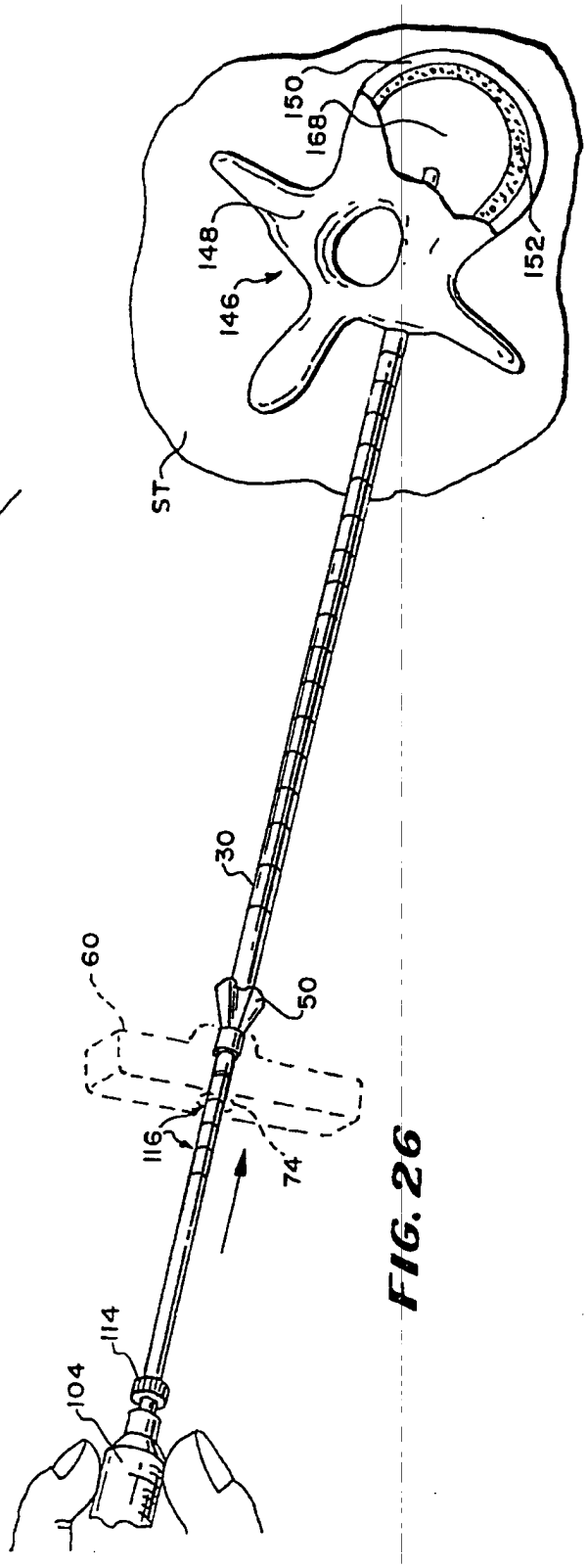
150
168
148
146
152
ST
30
60
50
116
74
114
104

FIG. 26

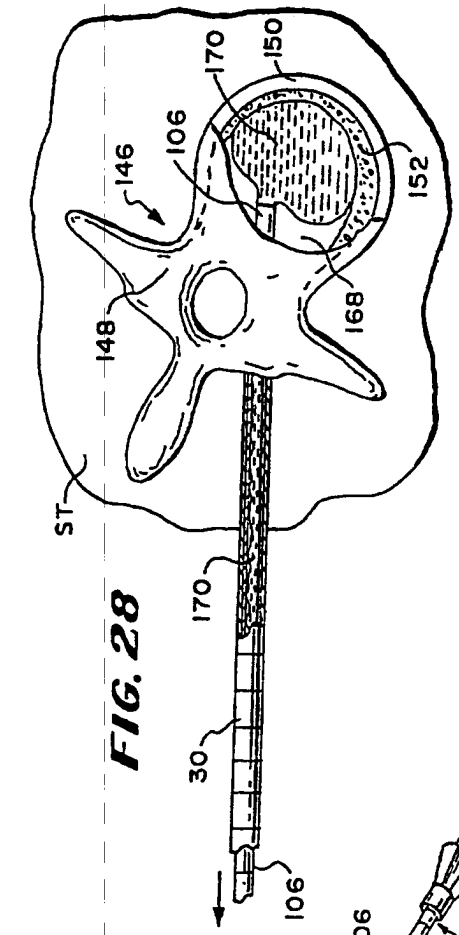

FIG. 28

FIG. 27

FIG. 29

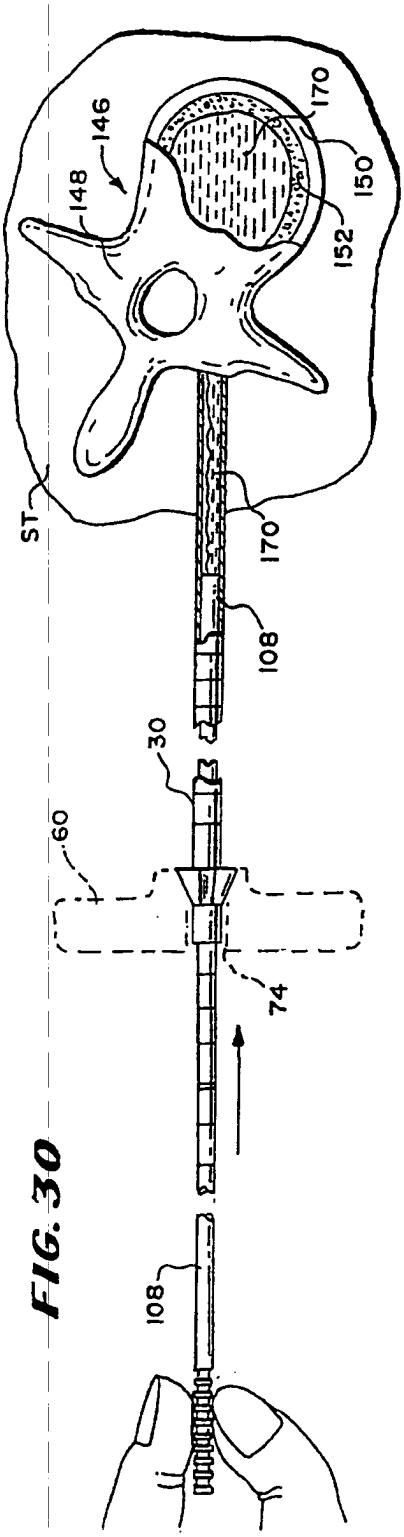

FIG. 30

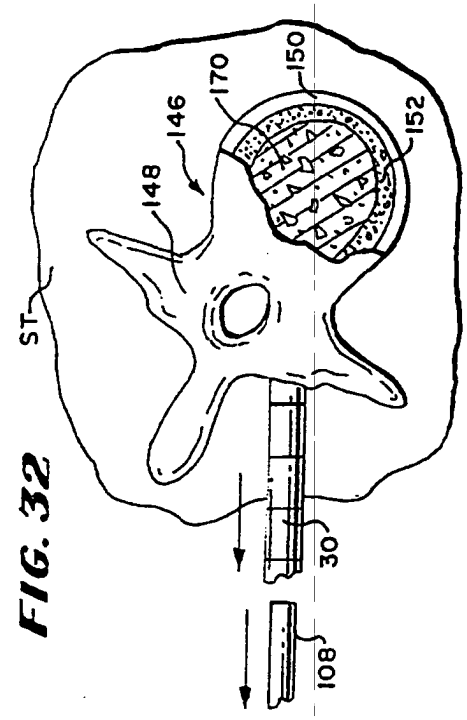

FIG. 32

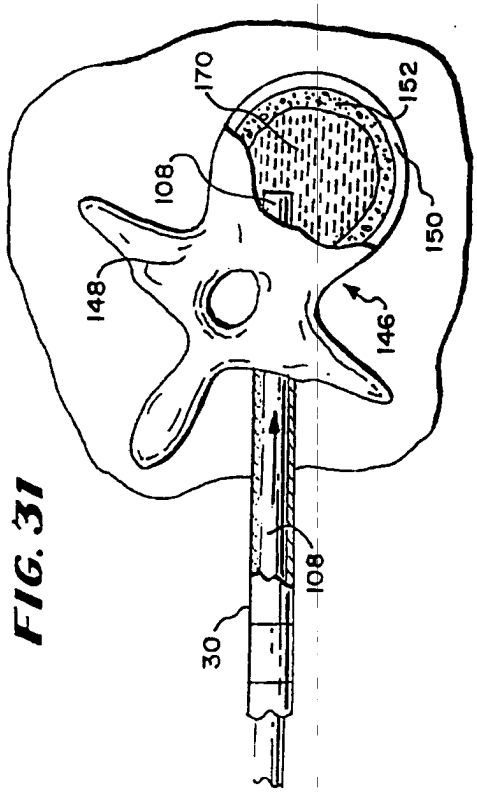

FIG. 31

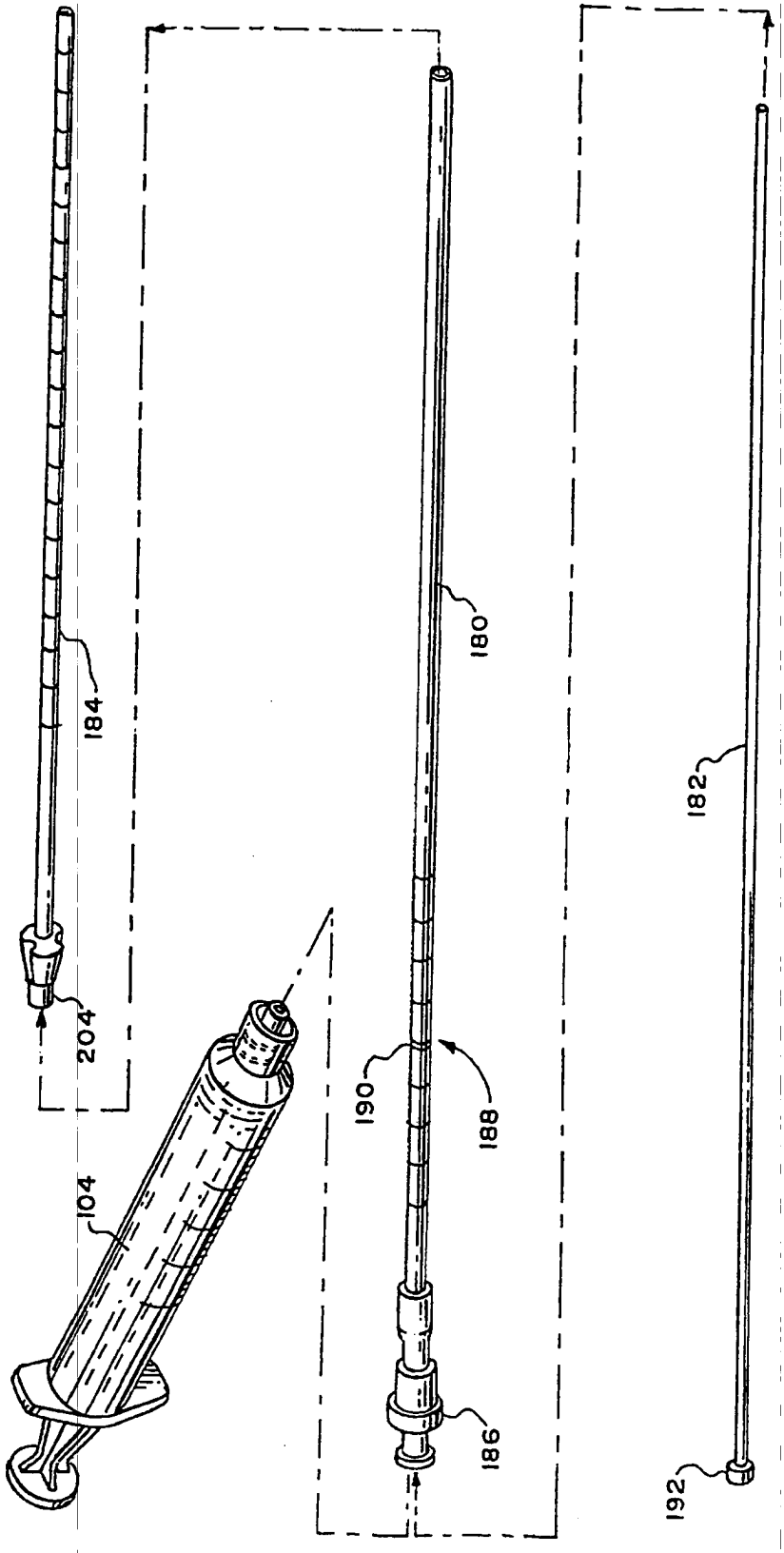

FIG. 33

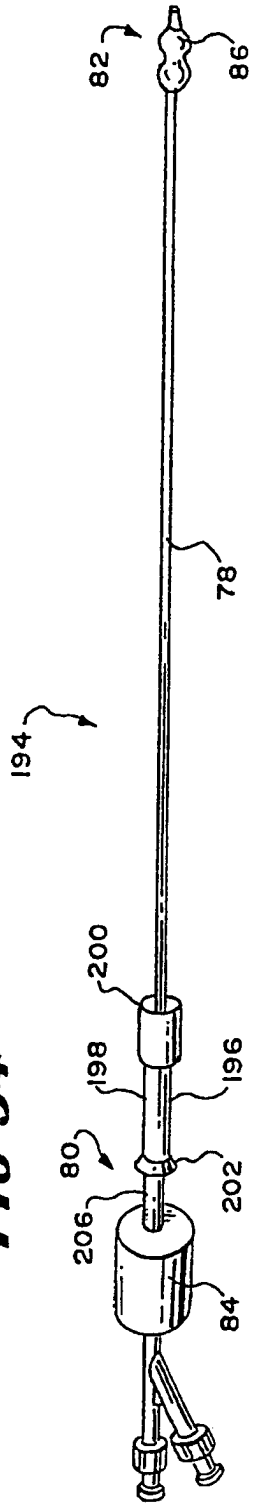
82
86
78
194
200
198
196
80
202
206
84

FIG 34

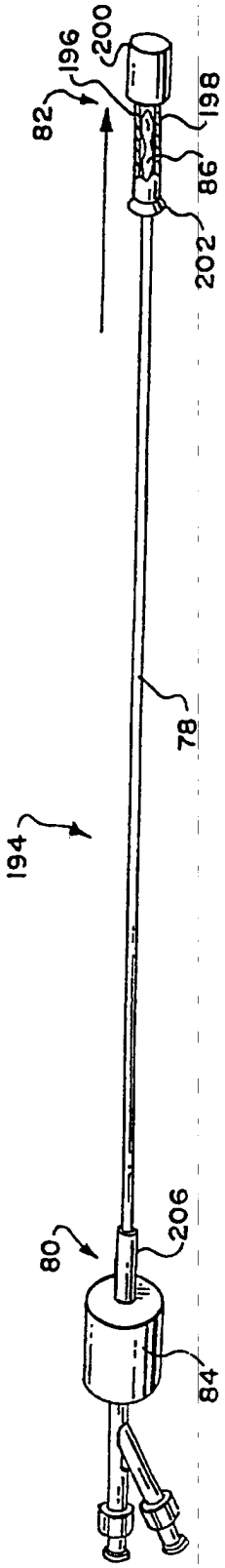
196
200
82
198
86
202
78
194
80
206
84

FIG. 35

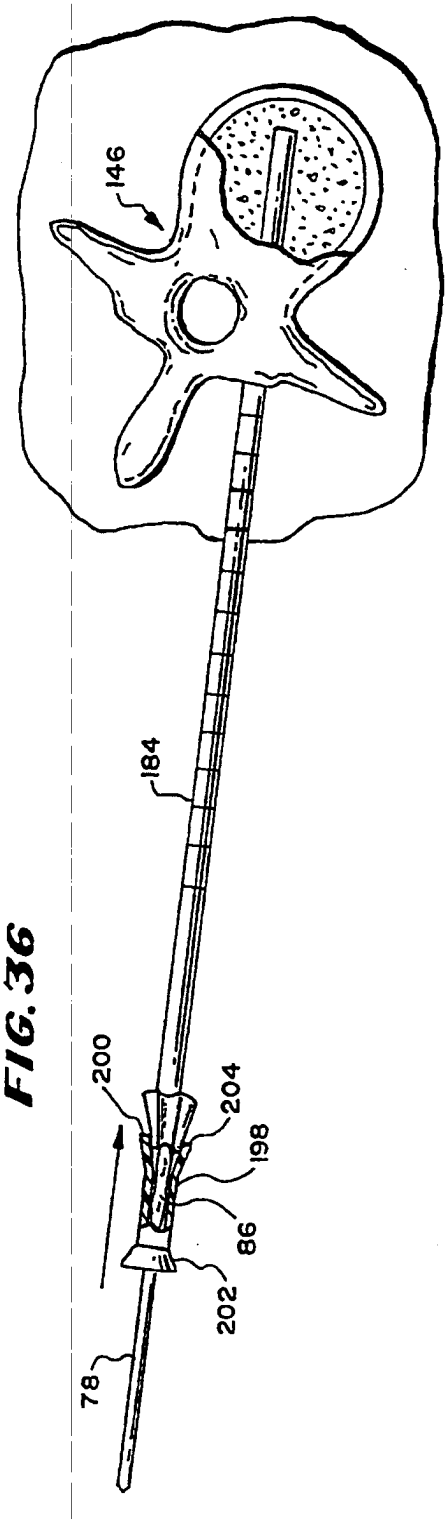

FIG. 36

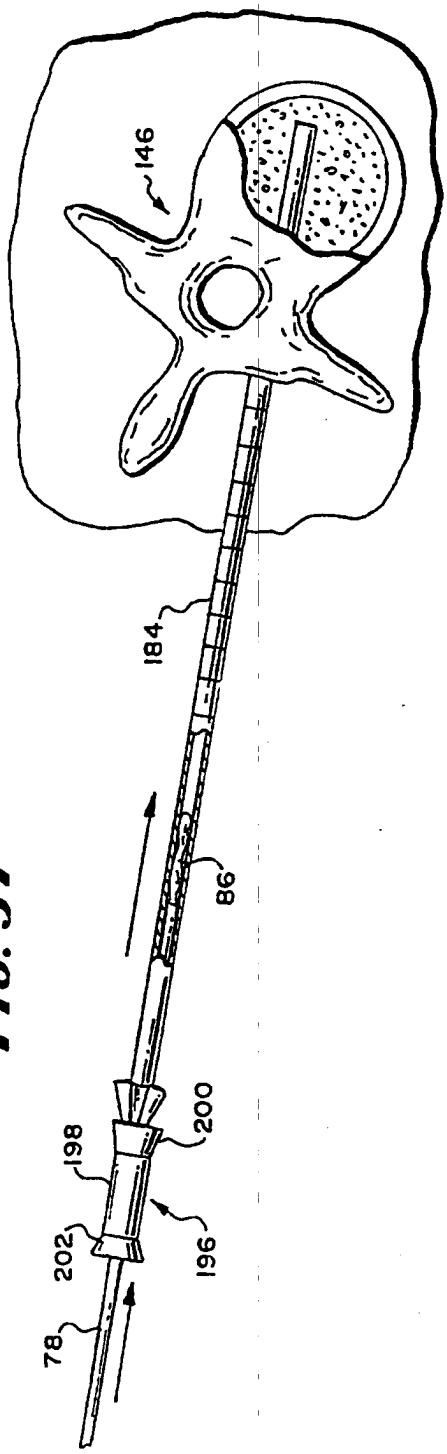

FIG. 37

SYSTEMS AND METHODS FOR PLACING MATERIALS INTO BONE

RELATED APPLICATION

This application is a divisional of co-pending application Ser. No. 09/134,323 filed Aug. 14, 1998 now U.S. Pat. No. 6,241,734.

FIELD OF THE INVENTION

The invention generally relates to the treatment of bone conditions in humans and other animals.

BACKGROUND OF THE INVENTION

Injection devices similar to a household caulking gun are used to inject bone cement into bone. A typical bone cement injection device has a pistol-shaped body, which supports a cartridge containing bone cement. A trigger actuates a spring-loaded ram, which forces a volume of bone cement in a viscous condition through a suitable nozzle and into the interior of a bone targeted for treatment. According to the teachings of U.S. Pat. Nos. 4,969,888 and 5,108,404, a cavity can be first formed by compacting cancellous bone inside the bone, into which the bone cement is injected. Conventional cement injection devices provide no opportunity to override the spring action and quickly terminate the flow of cement, should the cavity fill before the spring-actuated load cycle is completed. Furthermore, once the spring-actuated mechanism is triggered, conventional cement injection devices do not permit the injection volume or inject rate to be adjusted or controlled in real time, in reaction to cancellous bone volume and density conditions encountered inside bone.

In a clinical procedure called vertebroplasty, bone cement is injected at high pressure (typically, about 700 psi) into the interior of a vertebral body, without the prior formation of a cavity. Because high pressure is used, there is little opportunity to quickly and accurately adjust cement flow in reaction to bone volume and density conditions encountered. Momentum generated by high pressure-induced cement flow continues to propel cement into the targeted bone site even after termination of the high pressure.

As a result of the relatively high pressure that conventional procedures rely upon, coupled with the effective lack of a short response time, the targeted bone interior can suddenly overfill. Excess filling material can be forced outside the bone interior, and into adjoining tissue regions, where the presence of filling material is not required or desired.

For these and other reasons, there is a need for new systems and methods for placing material into bones, with greater rate and volume control, a faster response time, and without requiring the use of high pressure.

SUMMARY OF THE INVENTION

The invention provides instruments, systems, and methods, which, in use, enable greater control over the placement of materials into bone.

One aspect of the invention provides an instrument for tamping material into bone through a subcutaneous path. The instrument comprises a body having a length and a terminus. The body includes markings located along the length at increments from the terminus. The markings allow the physician to gauge the position of the instrument in the subcutaneous path, as material is being tamped into bone. In particular, the markers allow the physician to tell at a glance the location of the terminus, in terms of how far beyond or short of the end of the subcutaneous path it is.

In one embodiment, the instrument is used by deploying a cannula to establish a subcutaneous path into bone. A material is introduced into bone through the cannula. The terminus of the instrument is advanced through the cannula to urge material residing in the cannula into bone.

Another aspect of the invention provides an apparatus for introducing material into bone through a subcutaneous cannula. The apparatus includes a delivery device to convey the material at a low delivery pressure. As used herein, a "low delivery pressure" is equivalent to the pressure at which liquid is expressed from 1 cc syringe by the application of moderate force to the syringe piston, which amounts to a pressure that is no greater than about 360 psi.

According to this aspect of the invention, the apparatus also includes a nozzle instrument capable of advancement through the subcutaneous cannula into bone. The nozzle comprises a proximal fitting to couple the nozzle instrument to the delivery device. The nozzle further comprises a nozzle terminus through which the material conveyed by the delivery device enters bone at the delivery pressure.

In one embodiment, the delivery device comprises a syringe.

In one embodiment, the apparatus further includes a tamping instrument, which is capable of advancement through the subcutaneous cannula. The tamping instrument has a tamping terminus which, during the advancement, urges material residing in the subcutaneous cannula into bone.

In one embodiment, the tamping instrument includes markings to visually gauge the advancement of the tamping terminus through the subcutaneous cannula.

In one embodiment, the apparatus is used by deploying a cannula to establish a subcutaneous path into bone. The delivery device is actuated to convey material at the delivery pressure through the nozzle terminus into bone.

Another aspect of the invention provides a tool for deployment into bone. The tool comprises a catheter tube having a distal region and an expandable structure carried by the distal region for compacting cancellous bone. The tool also includes an introducer sleeve slidably carried by the catheter tube for movement between a retracted position spaced from the expandable structure and an advanced position overlying the expandable structure. The introducer sleeve includes a tubular main body dimensioned to compress the expandable structure when the introducer sleeve is in the advanced position. A collar extends beyond the distal region of the catheter tube when the introducer sleeve is in the advanced position. The collar is dimensioned larger than the tubular main body to releasably engage an end of a cannula. Thus, the introducer sleeve both sizes and aligns the expandable structure for passage into the cannula through the end of the cannula.

Another aspect of the invention provides apparatus for introducing material into bone through a subcutaneous cannula. The apparatus includes a delivery device to convey the material at a low delivery pressure, i.e., a pressure no greater than about 360 psi. The apparatus also includes a nozzle instrument capable of advancement through the subcutaneous cannula into bone and comprising a proximal fitting to couple the nozzle instrument to the delivery device. The nozzle also includes a nozzle bore, through which the material conveyed by the delivery device enters bone at the delivery pressure. The apparatus further includes a stylet capable of advancement into the nozzle bore through the

proximal fitting to close the nozzle bore and, with the nozzle instrument. Together, the nozzle and the stylet form a tamping instrument capable of advancement through the subcutaneous cannula to urge residual material from the subcutaneous cannula.

Another aspect of the invention provides a method for delivering material into bone. The method deploys a cannula through soft tissue to establish a subcutaneous path into bone. The method introduces a material into bone through the cannula. The method advances a tamping instrument through the cannula to urge material residing in the cannula into bone.

In one embodiment, the method delivers material at a low delivery pressure, i.e., a pressure no greater than about 360 psi.

In one embodiment, the introducing step uses a manual syringe.

The material can comprise medication or a material that sets to a hardened condition e.g., bone cement, or autograft tissue, or allograft tissue, or synthetic bone substitute, or combinations thereof.

In one embodiment, the method further includes the step of deploying a cavity forming instrument through the cannula to compress cancellous bone and form a cavity. In this embodiment, the introducing and advancing steps convey material into the cavity.

Features and advantages of the inventions are set forth in the following Description and Drawings, as well as in the appended Claims.

BRIEF DESCRIPTION OF THE DRAWINGS

FIG. **1** is a plane view of a kit housing a system of functional instruments, which, in use, gain subcutaneous access to the inside of a bone to compact cancellous bone and form a cavity for therapeutic purposes;

FIG. **2** is an exploded perspective view of the kit shown in FIG. **1**;

FIG. **3** is a perspective view of the subcutaneous access instrument group that forms a part of the system shown in FIG. **1**;

FIG. **4A** is a perspective view of the cavity forming instrument that forms a part of the system shown in FIG. **1**;

FIG. **4B** is a section view of the catheter tube of the cavity forming instrument, taken generally along line **4B**—**4B** in FIG. **1**;

FIG. **4C** is an end view of an alternative embodiment of the cavity forming instrument shown in FIG. **4A**, having a prebent stylet;

FIG. **5** is a perspective view of the material introducing instrument group that forms a part of the system shown in FIG. **1**;

FIGS. **6** and **7** are, respectively, top and side views of a human vertebral body;

FIG. **8** is a top view of a vertebral body during insertion of a spinal needle instrument to begin a bone access procedure;

FIGS. **9** to **11** are top views showing subsequent steps, after insertion of the spinal needle instrument shown in FIG. **8**, of inserting a guide pin instrument into the vertebral body;

FIG. **12** is a perspective view showing a subsequent step, after insertion of the guide pin instrument shown in FIGS. **9** to **11**, which deploys an obturator instrument deployed over the guide pin instrument with aid of a handle;

FIG. **13** is a top view of the vertebral body, with the obturator instrument shown in FIG. **12** deployed;

FIG. **14** is a perspective view showing a subsequent step, after insertion of the obturator instrument shown in FIG. **12**, which uses the handle shown in FIG. **12** to aid in the deployment of a cannula instrument over the obturator instrument;

FIG. **15** is a top view of the vertebral body, with the cannula instrument shown in FIG. **14** deployed;

FIG. **16** is a perspective view showing a subsequent step, after insertion of the cannula instrument shown in FIG. **14**, which removes the obturator instrument from the cannula instrument, to leave the cannula instrument and guide pin instrument in place;

FIG. **17** is a top view of the vertebral body, after the obturator removal step shown in FIG. **16**, leaving the cannula instrument and guide pin instrument in place;

FIG. **18** is a perspective view showing a subsequent step, after removal of the obturator instrument shown in FIG. **16**, which uses the handle shown in FIG. **14** to aid in the deployment of a drill bit instrument through the cannula instrument along the guide pin instrument;

FIG. **19** is a top view of the vertebral body, as the drill bit instrument shown in FIG. **18** is deployed with aid of the handle to open a passage into the interior volume of the vertebral body;

FIG. **20** is a perspective view showing a subsequent step, after removal of the drill bit instrument and guide pin instrument shown in FIG. **18**, of deploying the cavity forming instrument into the vertebral body;

FIG. **21** is a top view of the vertebral body, as the expandable structure carried by the cavity forming instrument shown in FIG. **20** is deployed into the interior volume of the vertebral body;

FIG. **22** is a top view of the vertebral body, as the expandable structure shown in a collapsed condition in FIG. **21** is expanded to compact cancellous bone and form a cavity;

FIG. **23** is a top view of the vertebral body, after removal of the expandable structure, showing the cavity formed by compacting cancellous bone;

FIG. **24** is a perspective view of the syringe of the material introducing instrument group, shown in FIG. **5**, being filled with a material selected for introduction into the cavity shown in FIG. **23**;

FIG. **25** is a perspective view of the syringe shown in FIG. **24** being joined to a nozzle, which also forms a part of the material introducing instrument group shown in FIG. **5**;

FIG. **26** is a perspective view showing the syringe and attached nozzle shown in FIG. **25** being deployed through the cannula instrument in preparation of introducing material into the cavity;

FIGS. **27** and **28** are perspective and top views, respectively, showing the syringe and attached nozzle shown in FIG. **26** in use to inject material into the cannula instrument for passage into the cavity;

FIG. **29** is a top view of the vertebral body after a measured volume of material has been injected and the syringe and attached nozzle withdrawn from the cannula instrument;

FIG. **30** is a top view showing the deployment of a tamping instrument, which forms a part of the material introducing instrument group shown in FIG. **5**, being deployed in the cannula instrument;

FIG. **31** is a top view showing advancement of the tamping instrument in the cannula instrument to displace and distribute material from the cannula instrument into the cavity;

FIG. 32 is a top view of the vertebral body after removal of the tamping instrument and cannula instrument, showing the cavity, now filled with the material;

FIG. 33 is a perspective view of a reduced diameter cannula instrument and associated reduced diameter material introducing instruments, which embody features of the invention;

FIG. 34 is a perspective view of a cavity forming instrument having an expandable cavity forming structure, which, in use, is deployed using the reduced diameter cannula instrument shown in FIG. 33, the cavity forming instrument having a sliding introducer sleeve shown in its rearward position;

FIG. 35 is a perspective view of the cavity forming instrument shown in FIG. 34, with the introducer sleeve moved forward to overlie and compress the expandable cavity forming structure;

FIG. 36 is a perspective view of the cavity forming structure shown in FIG. 35, with the introducer sleeve (shown partially in section) coupled to the proximal end of the cannula instrument, to guide the expandable structure compressed within the sleeve into the reduced diameter cannula instrument without damage; and

FIG. 37 is a perspective view of the cavity forming structure shown in FIG. 36, after the expandable structure has been guided by the introducer sleeve into the cannula instrument and is being advanced through the cannula instrument for deployment in bone.

The invention may be embodied in several forms without departing from its spirit or essential characteristics. The scope of the invention is defined in the appended claims, rather than in the specific description preceding them. All embodiments that fall within the meaning and range of equivalency of the claims are therefore intended to be embraced by the claims.

DETAILED DESCRIPTION OF THE PREFERRED EMBODIMENTS

FIGS. 1 and 2 show a system 10 of functional instruments. In use, certain instruments of the system 10 are deployed in a purposeful manner to penetrate tissue and gain subcutaneous access to the inside of a bone. Inside bone, other instruments of the system 10 are deployed to form a cavity in cancellous bone, into which a material is placed for therapeutic purposes.

In the illustrated embodiment, the system 10 is arranged as a prepackage kit 12 in three functional instrument groups 14, 16, and 18. The first group 14 (which FIG. 3 shows outside the kit 12) comprises instruments whose purpose is to gain subcutaneous access to a bone interior. The second group 16 (which FIG. 4 shows outside the kit 12) comprises an instrument whose function is to create a cavity in cancellous bone. The third group 18 (which FIG. 5 shows outside the kit 12) comprises instruments whose function is to introduce a material into the cavity.

The kit 12 can take various forms. In the illustrated embodiment, the kit 12 comprises a sterile, wrapped assembly.

Further details of each functional instrument group 14, 16, and 18 and the kit 12 follow.

I. The Subcutaneous Access Instrument Group

The number and type of instruments in the group 14 can vary. FIG. 3 shows five representative instruments, each having a different size and function.

A. The Spinal Needle and Guide Pin

As FIG. 3 shows, one instrument comprises a conventional spinal needle assembly 20 and a guide pin instrument 26.

In use, the spinal needle assembly 20 establishes the initial subcutaneous path leading to the targeted treatment site. The guide pin instrument 26 is deployed through this path, followed by progressively larger instruments, as will be described later.

The spinal needle assembly 20 comprises a stylet 22, which is slidably deployed within a stylus 24. The stylus 24 typically has, for example, about an eleven gauge diameter. Other gauge diameters can be used, according to the gauge of the guide pin instrument 26 used.

In use, the guide pin instrument 26 is deployed through the subcutaneous path established by the spinal needle assembly 20, by exchange with the needle stylet 22. The guide pin instrument 26 serves to guide the establishment of the main operative pathway to the targeted treatment site.

The remaining instruments 28, 30, and 32 in the group 14 share some common features, although they are intended, in use, to perform different functions. These instruments 28, 30, and 32 are each made of a rigid, surgical grade plastic or metal material. These instruments 28, 30, and 32 each comprises an elongated, cylindrical body having a proximal end 34 and a distal end 36.

B. The Obturator Instrument

The instrument 28 functions as an obturator. Its distal end 36 is tapered to present a penetrating surface 38. In use, the surface 38 is intended to penetrate soft tissue in response to pushing or twisting forces applied by the physician at the proximal end 34.

The proximal end 34 of the obturator instrument 28 presents a flanged surface 40, which tapers from a larger outer diameter to a smaller outer diameter in the direction of the proximal end 34. The flanged surface 40 includes an array of circumferentially spaced teeth 42.

An interior lumen 44 extends through the obturator instrument 28 from the distal end 36 to the proximal end 34. The interior lumen 44 is sized to accommodate the guide pin instrument 26, as will be described in greater detail later.

C. The Cannula Instrument

The instrument 30 functions as a cannula or guide sheath. The cannula instrument 30 is somewhat larger in diameter than and not as long as the obturator instrument 28. The cannula instrument 30 includes an interior lumen 46 that extends from its distal end 36 to its proximal end 34. The interior lumen 46 is sized to accept the obturator instrument 28. The size of the interior lumen 46 permits a physician to slide and rotate the cannula instrument 30 relative to the obturator instrument 28, and vice versa, as will be described in greater detail later.

The distal end 36 of the cannula instrument 30 presents an end surface 48. In use, the end surface 48 of the cannula instrument 30 is intended to penetrate soft tissue surrounding the obturator instrument 28 in response to pushing or twisting forces applied at the proximal end 34.

The proximal end 34 carries an enlarged fitting 50. The fitting 50 tapers from a larger diameter to a smaller diameter in the direction of the proximal end 34. Like the tapered flange 40 on the obturator instrument 28, the tapered fitting 50 has an array of circumferentially spaced teeth 52. The tapered fitting 50 of the cannula instrument 30 possesses a larger maximum outer diameter than the maximum outer diameter of the tapered flange 40 of the obturator instrument 28.

The cannula instrument 30 includes measured markings 118 along its length(see FIG. 3). The measured markings 118

gauge the depth of insertion. The markings **118** can be placed, for example, at one centimeter intervals. As FIG. **3** shows, the markings **118** can be consecutively numbered, beginning at the distal end **36**, so that the physician can ascertain the insertion depth at a glance.

D. The Drill Bit Instrument

The instrument **32** functions as a drill bit. The drill bit instrument **32** has generally the same physical dimensions as the obturator instrument **28**. Like the obturator instrument **28**, the drill bit instrument **32** is intended, in use, to fit for sliding and rotational movement within the interior lumen **46** of the cannula instrument **30**.

The distal end **36** of the drill bit instrument **32** includes machined cutting edges **54**. In use, the cutting edges **54** are intended to penetrate hard tissue in response to rotation and longitudinal load forces applied at the proximal end **34** of the drill bit instrument **32**.

The proximal end **34** presents a tapered flange **56**, which is substantially identical to the flange **40** on the obturator instrument **28**. Like the obturator instrument **28**, the tapered flange **56** changes from a larger diameter to a smaller diameter in the direction of the proximal end **34**. The tapered flange **56** of the drill bit instrument **32** also includes an array of circumferentially spaced teeth **58**. The form and orientation of the teeth **58** on the drill bit instrument **32** correspond to the form and orientation of the teeth **42** on the obturator instrument **28**.

E. The Handle

The group includes a handle **60**. The handle **60** engages the functional instruments **28**, **30**, and **32** in a removable, slip fit fashion to aid a physician in manipulating the instruments during use.

The handle **60** is made from a molded or cast rigid plastic or metal material. The handle **60** is shaped to be comfortably and securely grasped by a normal human hand. The shape and size to accommodate this function can, of course, vary. In the illustrated embodiment, the handle **60** is elongated along a main axis to fit comfortably across the palm of the hand.

The handle **60** includes a center post **62**, which is integrally molded to the handle **60** about its geometric center. The center post **62** extends downward to give the handle **60** a general T-shape.

The handle **60** includes two interior cavities or sockets **64** and **66** in the center post **62**. The sockets guide the attachment between the handle **60** and the instruments **28**, **30**, and **32**. The first and second sockets **64** and **66** are sized to present unique attachment sites for different functional instruments.

The first socket **64** includes an array of circumferentially spaced grooves **68**, which, in form and orientation, match the teeth **42** and **58** at the proximal ends **34** of the obturator instrument **28** and the drill bit instrument **32**. The first socket **64** accepts the tapered flange **40** or **56** of either the obturator instrument **28** or the drill bit instrument **32**. The teeth **42** and **58** of either tapered flange **40** or **56** mesh in a slip-fit with the grooves **68** of the first socket **64**. The running slip-fit allows longitudinal force to be applied to either instrument **28** or **32** through the handle **60**. The running slip-fit also prevents relative rotation between either instrument **28** or **32** and the first socket **64**, thereby permitting torsional or twisting forces to be applied to either instrument **28** or **32** by the handle **60**, with an increased mechanical advantage.

The second socket **66** is larger than the first socket **64** and is sized to accept the larger tapered fitting **50** of the cannula instrument **30**. The second socket **66** includes an array of circumferentially spaced grooves **70**, which, in form and orientation, match the teeth **52** on the tapered fitting **50**. The teeth **52** of the tapered fitting **50** mesh in a slip-fit with the grooves **70** of the second socket **66**. The running slip-fit allows both longitudinal and torsional forces to be applied to the cannula instrument **30** through the handle **60**, with increased mechanical advantage.

As shown in phantom lines in FIG. **3**, a first passage **72** extends through the top of the handle **60**, through the center post **62**, and into the first socket **64**. The passage **72** is generally aligned with the center of the first socket **64** and is sized to pass the guide pin instrument **26** (see FIG. **12**).

Likewise, as also shown in phantom lines in FIG. **3**) a second passage **74** extends through the top of the handle **60**, through the center post **62**, and into the second socket **66**. The passage **74** is generally aligned with the center of the second socket **66** and is sized to pass the either obturator instrument **28** or the drill bit instrument **32** (see FIG. **14**).

Further details of the handle **60** can be found in copending U.S. patent application Ser. No. 09/014,229, filed Jan. 27, 1998, and entitled "A Slip-Fit Handle for Hand-Held Instruments that Access Interior Body Regions."

Further details regarding the use of the handle **60** and the associated instruments **26**, **28**, and **30** will be provided later.

II. The Cavity Forming Instrument

As FIG. **4A** shows, the group **16** includes an instrument **76**, which is deployed through the cannula instrument **30** to a location inside bone (see FIG. **20**). When so deployed, the instrument **76** serves to form a cavity in cancellous bone.

The instrument **76** can be constructed in various ways. In the illustrated embodiment, the instrument **76** includes a flexible catheter tube **78** having a proximal end **80** and a distal end **82**. The proximal end **80** carries a handle grip **84** to facilitate gripping and maneuvering the catheter tube **78**. The materials for the catheter tube **78** are selected to facilitate its advancement through the cannula instrument **30**. The catheter tube **78** can be constructed, for example, using standard flexible, medical grade plastic materials, like vinyl, nylon, polyethylenes, ionomer, polyurethane, and polyethylene tetraphthalate (PET). The catheter tube **78** can also include more rigid materials to impart greater stiffness and thereby aid in its manipulation. More rigid materials that can be used for this purpose include stainless steel, nickel-titanium alloys (Nitinol™ material), and other metal alloys.

The distal end **82** of the instrument **76** carries an expandable structure **86**. In the illustrated embodiment, the expandable structure **86** is made from a polyurethane or an elastomer (e.g., silicone or nylon) material. The structure **86** has been preformed to possess a desired shape by exposure to heat and pressure, e.g., through the use of conventional thermoforming techniques.

As FIG. **4B** shows, the catheter body **78** includes an interior lumen **88**, which communicates with the interior of the structure **86**. A fitting **90** on the proximal end **80** of the catheter tube **78** (see FIG. **4B**) communicates with the lumen **88**. The fitting **90** couples the lumen **88** to a source **92** of fluid, e.g., sterile saline (see FIG. **21**), or a radiopaque contrast medium.

The fluid is introduced from the source **92** into the structure **86** under positive pressure, causing the structure **86** to expand. During expansion inside bone, the material selected for the structure **86** preferably resists deformation, so that the expanded shape inside bone essentially corresponds to its expanded shape outside bone, i.e., when in an open air environment. This allows the physician to select in an open air environment a structure **86** having an expanded shape desired to meet the targeted therapeutic result, with the confidence that the expanded shape inside bone will be

similar in important respects. In addition to being able to expand its volume while resisting deformation inside bone, the material of the structure **86** preferable withstands abrasion, tearing, and puncture when in contact with cancellous bone.

The shape of the structure **86**, when expanded inside bone, is selected by the physician, taking into account the morphology and geometry of the site to be treated. The shape of the cancellous bone to be compressed, and the local structures that could be harmed if bone were moved inappropriately, are generally understood by medical professionals using textbooks of human skeletal anatomy along with their knowledge of the site and its disease or injury. The physician is also able to select the expanded shape inside bone based upon prior analysis of the morphology of the targeted bone using, for example, plain film x-ray, fluroscopic x-ray, or MRI or CT scanning. The expanded shape inside bone is selected to optimize the formation of a cavity that, e.g., when filled with a suitable material, provides support across the region of the bone being treated.

As one general guideline, in cases where the bone disease causing fracture (or the risk of fracture) is the loss of cancellous bone mass (as in osteoporosis), the selection of the expanded shape of the structure **86** inside bone should take into account that from 30% to 90% of the cancellous bone volume should be compacted. Another general guideline is the amount that the targeted fractured bone region has been displaced or depressed. The expansion of the structure **86** within the cancellous bone region inside a bone can elevate or push the fractured cortical wall back to or near its anatomic position occupied before fracture occurred.

In the illustrated embodiment (see FIG. 4A), the structure **86** possesses a preformed hour-glass or peanut shape. This shape is selected in contemplation of deploying the structure **86** in a vertebral body, as will be described in greater detail later.

To facilitate deployment of the structure **86** through the cannula instrument **30**, the catheter tube **78** includes a second interior lumen **94**. The lumen **94** extends from a second fitting **98** on the proximal end **80** of the catheter tube **78**, through the body of the cannula tube **78**, and through the interior of the structure **86** to the tip end **172** of the structure **86**. The lumen **94** receives a generally stiff stylet **96**, which can be made from a molded plastic or stainless steel material. The stylet **96** is inserted through the fitting **98** into the lumen **94**, and includes a threaded coupling **100** to secure the stylet **96** against movement. The presence of the stylet **96** serves to keep the structure **86** in the desired distally straightened condition during passage through the cannula instrument **30** into the targeted tissue region. Once the structure **86** is free of the cannula instrument **30** and inside bone, the stylet **96** can be withdrawn (shown by arrow **174** in FIG. 4A). This returns normal flexibility to the catheter tube **78** and facilitates manipulation of the structure **86** inside bone. With the stylet **96** withdrawn, the lumen **94** can also serve as a pathway for introducing rinsing liquid or to aspirate debris from the bone.

In the illustrated embodiment, the stylet **96** is biased toward a generally straight condition. In an alternative embodiment (see FIG. 4C), a stylet **102** can have a preformed memory, to normally bend its distal region. The memory is overcome to straighten the stylet **102** when confined within the cannula instrument **30**. However, as the structure **86** and distal region of the preformed stylet **102** advance free of the cannula instrument **30**, to pass into the targeted region, the preformed memory bends the distal region of the stylet **102** and thereby shifts the main axis of the expandable structure **86**. The prebent stylet **102**, positioned within the interior of the structure **86**, aids in altering the orientation of the structure **86**, bringing it into better anatomic alignment with the targeted region.

Other types of instruments that can form cavities in cancellous bone and other interior body regions are described in copending U.S. patent application Ser. No. 09/055,805, entitled "Structures and Methods for Creating Cavities in Interior Body Regions," filed Apr. 6, 1998.

III. The Material Introducing Instrument Group

The group **18** includes instruments **104**, **106**, and **108** which serve to convey and compact a selected material inside the cavity formed by the structure **86**. The material in the cavity provides a desired therapeutic result, e.g., replacement of tissue mass, or renewed interior support for the bone, or the delivery of medication, or combinations thereof. Accordingly, the material to perform this function can be selected from among, e.g., a material that sets to a hardened condition, including bone cement, autograft tissue, allograft tissue, synthetic bone substitute, as well as a medication, or combinations thereof.

In the illustrated embodiment, the group **18** comprises material injection instruments **104** and **106** and a material tamping instrument **108**, which deliver material at a low delivery pressure, i.e., a pressure no greater than about 360 psi.

A. Low Pressure Material Injection Instruments

In the illustrated embodiment, the material is injected by use of a conventional syringe **104**, to which a specially designed injection nozzle **106** is coupled. A manual actuated syringe with a push plunger can be used. Alternatively, a LeVeen Inflation Syringe with threaded plunger can be used, which can be actuated manually or by use of a mechanical actuator.

In the illustrated embodiment, the syringe **104** is made from a clear plastic material. The syringe **104** includes a chamber **110**, which receives the material to be injected. The material is expressed from the chamber **100** by a manually advanced syringe piston **112** (see also FIG. **25**).

The injection nozzle **106** connects by a threaded connector **114** to the end of the syringe **104 9** (see also FIG. **25**). In the illustrated embodiment, the nozzle **106** is made from a generally flexible, inert plastic material, such as such as polyethylene or an other suitable polymer. Alternatively, the nozzle **106** can be made from a generally rigid plastic or metal material.

The injection nozzle **106** is sized to be advanced through the cannula instrument **30** (see FIG. **26**). The nozzle **106** includes measured markings **116** along its length. The markings **116** can be placed, for example, at one centimeter intervals, to correspond with the markings **118** on the cannula instrument **30**, so that the relative position of the nozzle **106** within the cannula instrument **30** can be gauged. The markings **118** can, e.g., include a set point **176**. Alignment of the set point **176** at the proximal end **34** of the cannula instrument **30**, indicates that the distal end of the nozzle **106** is located in an aligned relationship with the distal end **36** of the cannula instrument **30**. In this arrangement, the markings **118** are consecutively numbered with positive numbers proximally of the set point **176** and with negative numbers distally of the set point **176**. The physician is thereby able to tell at a glance the location of the distal end of the nozzle **106**, in terms of how far beyond or short of the distal end **36** of the cannula instrument **30** it is.

In use, the distal end of the nozzle **106** is located beyond the distal end **36** of the cannula instrument **30** within the cavity formed in the targeted tissue region. As FIG. **5** shows,

the distal end of the nozzle **106**, when made from a plastic material, can carry at least one radiopaque marker **208**, to enable remote visualization of the nozzle position within the body. The syringe **104** ejects a predetermined volume of material into the nozzle **106** in a low pressure stream into the cavity. As the material fills the cavity, the nozzle (still ejecting material) is retracted from the cavity and into the cannula instrument **30** itself. Further details of this function and result will be provided later.

B. The Material Tamping Instrument

The group **18** also includes a material tamping instrument **108**. The tamping instrument **108** is made from generally rigid, inert plastic or metal material. The tamping instrument **108** is also sized to be advanced into the cannula instrument **30** (see FIG. **30**). The free end **124** of the tamping instrument **108** is ribbed or contoured to facilitate gripping the instrument **108** during use.

The tamping instrument **108** includes measured markings **122** along its length. The markings **116** can be placed, for example, at one centimeter intervals, to correspond with the markings **118** on the cannula instrument **30**, so that the relative position of the tamping instrument **108** within the cannula instrument **30** can be gauged. Like the nozzle **106**, the markings **122** on the tamping instrument **108** includes a set point **178**, which indicates when the distal end of the tamping instrument **108** aligns with the distal end **36** of the cannula instrument **30**. Also like the nozzle **106**, the markings **122** on the tamping instrument **108** are consecutively numbered with positive numbers proximally of the set point **178** and with negative numbers distally of the set point **178**. The physician is thereby able to tell at a glance the location of the end of the tamping instrument **108**, in terms of how far beyond or short of the distal end **36** of the cannula instrument **30** it is. As FIG. **5** also shows, the end of the tamping instrument **108**, when made from a plastic material, can carry at least one radiopaque marker **210**, so that its position can be visualized from outside the body.

After withdrawal of the nozzle **106** from the cannula instrument **30**, residual material is left in the cannula instrument **30**. The purpose of the tamping instrument **108** is to displace the residual material out the distal end **36** of the cannula instrument **30** and into the cavity, to thereby fill the cavity without exerting undue pressure within the bone. The tamping instrument **108** thereby serves to clear residual material from the cannula instrument **30**, to assure that the desired volume of material is delivered into the cavity. The removal of residual material from the cannula instrument **30** by the tamping instrument **108** also prevents seepage of material into surrounding tissue regions upon removal of the cannula instrument **30**. The tamping instrument **108** also compacts the material uniformly within the cavity, again without undue pressure. Further details of these functions and results will be discussed later.

IV. The Kit

As FIGS. **1** and **2** show, in the illustrated embodiment, the kit **12** includes an interior tray **126** made, e.g., from die cut cardboard, plastic sheet, or thermo-formed plastic material. The tray **126** includes spaced apart tabs **128**, which hold the various instruments in a secure position during sterilization and storage prior to use.

When packaged as a sterile assembly, the kit **12** includes an inner wrap **130**, which is peripherally sealed by heat or the like, to enclose the tray **126** from contact with the outside environment. One end of the inner wrap includes a conventional peal-away seal **132**, to provide quick access to the tray **126** at the instant of use, which preferably occurs in a sterile environment, such as within an operating room.

When packaged as a sterile assembly, the kit **12** also includes an outer wrap **134**, which is also peripherally sealed by heat or the like, to enclosed the inner wrap **130**. One end of the outer wrap includes a conventional peal-away seal **136**, to provide access to the inner wrap **130** and its contents. The outer wrap **134** can be removed from the inner wrap in anticipation of imminent use, without compromising sterility of the contents of the kit **12**.

As FIG. **2** shows, each inner and outer wrap **130** and **134** includes a peripherally sealed top sheet **138** and bottom sheet **140**. In the illustrated embodiment, the top sheet **138** is made of transparent plastic film, like polyethylene or MYLAR® material, to allow visual identification of the contents of the kit **12**. The bottom sheet **140** is made from a material that is permeable to ETO sterilization gas, e.g., TYVEK® plastic material (available from DuPont).

In the illustrated embodiment, the tray **126** presents the instruments groups **14**, **16**, and **18** in an ordered, organized layout, which is arranged to aid the physician in carrying out the intended procedure. For example, the layout of the tray **126** can present the instruments groups **14**, **16**, and **18** in top-to-bottom order, according to sequence of intended use. For example, in a typical bone access procedure (as will be demonstrated in greater detail later), the stylet **22** and stylus **24** of the spinal needle assembly **20** are deployed first, followed by the guide pin instrument **26**, followed by the obturator instrument **28**, then the cannula instrument **30**, then the drill bit instrument **32**, then the cavity forming instrument **76**, then the syringe **104** and nozzle **106** instruments, and lastly the tamping instrument **108**. Accordingly, the tray **126** packages these instruments and components in a top-to-bottom order, with the spinal needle assembly **20** topmost, the guide pin instrument **26** next, the obturator instrument **28** next, and so on, with the tamping instrument **108** lowermost on the tray **126**.

In this layout, the handle **60** is packaged to the side of the access instrument group **14**. The tray **126** can include written labels (not shown) identifying the components contained in the kit **12**.

The kit **12** also preferably includes in the tray **126** directions **144** for using the contents of the kit **12** to carry out a desired procedure. An exemplary procedure which the directions **144** can describe will be explained later.

When packaged as a sterile assembly, the directions **144** can also include the statement "For Single Patient Use Only" (or comparable language) to affirmatively caution against reuse of the contents of the kit **12** whose performance characteristics and efficacy degrade after a single use. The spinal needle assembly **20**, the cavity forming instrument **76**, and the material introducing instruments **104**, **106**, and **108** should, for these reasons, be used but a single time and then discarded. The directions **144** also preferably affirmatively instruct against resterilization of at least these contents of kit **12**, and also instructs the physician to dispose of at least these contents of the kit **12** upon use in accordance with applicable biological waste procedures.

The presence of the instrument groups **14**, **16**, and **18** packaged in the sterile kit **12** verifies to the physician that the contents are sterile and have not been subjected to prior use. The physician is thereby assured that the instrument groups meet established performance and sterility specifications.

It should be appreciated that the various instruments contained in the kit **12** can be packaged into several, smaller functional kits. For example, a first kit can package the access instrument group **14**, a second kit can package the cavity forming instrument group **16**, and a third kit can package the material introduction instrument group **18**. FIGS. **1** and **2** illustrate one of many different possible embodiments.

V. Illustrative Use of the System

The following describes use of the instrument groups **14**, **16**, and **18** packaged in the kit **12** in the context of treating bones. This is because the instruments of the groups **14**, **16**, and **18** can be advantageously used for this purpose. Still, it should be appreciated that one or more of the instrument groups, used alone or in association with other instruments, can perform other diagnostic or therapeutic functions in other interior regions of the body.

In particular, the instrument groups **14**, **16**, and **18** will described with regard to the treatment of human vertebra. It should be appreciated, however, their use is not limited to human vertebrae. The instrument groups **14**, **16**, and **18** can be used in association with hand-held instruments in the treatment of diverse human or animal bone types.

A. The Vertebral Body

As FIGS. **6** and **7** show, a typical vertebra **146** includes a vertebral body **148**, which extends on the anterior (i.e., front or chest) side of the vertebra **146**. The vertebral body **148** has the shape of an oval disk. The vertebral body **148** includes an exterior formed from compact cortical bone **150**. The cortical bone **150** encloses an interior volume of reticulated cancellous, or spongy, bone **152** (also called medullary bone or trabecular bone).

The spinal cord **154** passes through the spinal canal **156** of the vertebra **146**. The vertebral arch **158** surrounds the spinal canal **156**. The pedicles **160** of the vertebral arch **158** adjoin the vertebral body **148**. The spinous process **162** extends from the posterior of the vertebral arch **158**, as do the left and right transverse processes **164**.

B. Treatment of a Vertebral Body

During a typical procedure, a patient lies on an operating table. The patient can lie face down on the table, or on either side, or at an oblique angle, depending upon the physician's preference.

The physician or surgical assistant removes the outer and inner wraps **130** and **134** of the kit **12**, exposing the tray **126** for use. The physician acquires the spinal needle assembly **20** from the tray **126**. As FIG. **8** shows, the physician introduces the spinal needle assembly **20** into soft tissue ST in the patient's back. Under radiologic or CT monitoring, the physician advances the spinal needle assembly **20** through soft tissue down to and into the targeted vertebra **146**. The physician will typically administer a local anesthetic, for example, lidocaine, through assembly **20**. In some cases, the physician may prefer other forms of anesthesia.

The physician directs the spinal needle assembly **20** to penetrate the cortical bone **150** and the cancellous bone **152** of the targeted vertebral body **148**. Preferably the depth of penetration is about 60% to 95% of the vertebral body **148**.

FIG. **8** shows gaining access to cancellous bone through the side of the vertebral body **148**, which is called postero-lateral access. However, access may be indicated through a pedicle **160**, which is called transpedicular access. The type of access is based upon the objectives of the treatment or for other reasons, based upon the preference of the physician.

As FIG. **9** shows, after positioning the spinal needle assembly **20** in cancellous bone **152**, the physician holds the stylus **24** and withdraws the stylet **22**. The physician acquires the guide pin instrument **26** from the tray **126**. As FIG. **10** shows, while still holding the stylus **24**, the physician slides the guide pin instrument **26** through the stylus **24** and into the cancellous bone **152**. The physician now removes the stylus **24** (see FIG. **11**), leaving the guide pin instrument **26** deployed within the cancellous bone **152**.

The physician next acquires the obturator instrument **28** and the handle **60** from the tray **126**. The physician slides the obturator instrument **28** over the guide pin instrument **26**, distal end first. The physician slides the guide pin instrument **26** through the first passage **72** and the first socket **64** of the handle **60**. As FIG. **12** shows, the physician slides the handle **60** along the guide pin instrument **26** toward the tapered flange **40** of the obturator instrument **28**, until achieving a running slip-fit between the first socket **64** and the tapered flange **40**, in the manner previously described. The obturator instrument **28** is now ready for use.

As FIG. **12** shows, the physician makes a small incision I in the patient's back. The physician twists the handle **60** while applying longitudinal force to the handle **60**. In response, the surface **38** of the obturator instrument **28** rotates and penetrates soft tissue ST through the incision I. The physician may also gently tap the handle **60**, or otherwise apply appropriate additional longitudinal force to the handle **60**, to advance the obturator instrument **28** through the soft tissue along the guide pin instrument **26** down to the entry site (see FIG. **13**). The physician can also tap the handle **60** with an appropriate striking tool to advance the surface **30** of the obturator instrument **28** into the side of the vertebral body **148** to secure its position (as FIG. **13** shows).

The physician next slides the handle **60** along the guide pin instrument **26** away from the obturator instrument **28** to disengage the tapered flange **40** from the first socket **64**. The physician then proceeds to slide the handle **60** completely off the guide pin instrument **26**.

The physician acquires the cannula instrument **30** from the tray **126**. As FIG. **14** shows, the physician slides the cannula instrument **30** over the guide pin instrument **26**, distal end first, and, further, over the obturator instrument **28**, until contact between the end surface **48** and soft tissue tissue ST. The physician now slides the guide pin instrument **26** and obturator instrument **26** through the second passage **74** and second socket **66** of the handle **60**. The physician slides the handle **60** toward the tapered fitting **50** of the cannula instrument **30** until a running slip-fit occurs between the second socket **66** and the tapered fitting **50**, as previously described. The cannula instrument **30** is now ready for use.

As FIG. **14** shows, the physician applies appropriate twisting and longitudinal forces to the handle **60**, to rotate and advance the cannula instrument **30** through soft tissue ST along the obturator instrument **28**. As FIG. **15** shows, when the end surface **48** of the cannula instrument **30** contacts cortical bone, the physician can appropriately tap the handle **60** with a striking tool to advance the end surface into the side of the vertebral body **148** to secure its position.

As FIG. **16** shows, the physician now withdraws the obturator instrument **28**, sliding it off the guide pin instrument **26**. This leaves the guide pin instrument **26** and the cannula instrument **30** in place, as FIG. **17** shows. The physician next slides the handle **60** along the guide pin instrument **26** away from the cannula instrument **30** to disengage the tapered fitting **50** from the second socket **66**. The physician then slides the handle **60** completely off the guide pin instrument **26**.

The physician now acquires the drill bit instrument **32** from the tray **126**. As FIG. **18** shows, the physician slides the drill bit instrument **32** over the guide pin instrument **26**, distal end first, through the cannula instrument **30** until contact between the machined surface **54** and bone tissue occurs. As FIG. **18** also shows, the physician next leads the guide pin instrument **26** through the first passage **72** and first socket **64** of the handle **60**. The physician slides the handle **60** along the guide pin instrument **26** toward the tapered flange **56** of the drill bit instrument **32**, until a running slip-fit occurs between the first socket **64** and the tapered flange **56**, as previously described. The drill bit instrument **32** is now ready for use.

As shown by FIG. **18**, guided by X-ray (or another external visualizing system), the physician applies appropriate twisting and longitudinal forces to the handle **60**, to rotate and advance the cutting edge **54** of the drill bit instrument **32** to open a passage **166** (see FIG. **19**) through the bone tissue and completely into the cancellous bone **152**. The drilled passage **166** preferable extends no more than 95% across the vertebral body **148**.

The physician now slides the handle **60** along the guide pin instrument **26** away from the drill bit instrument **32** to disengage the tapered flange **56** from the first socket **64**. The physician, further, slides the handle **60** completely off the guide pin instrument **26**.

The physician can now remove the drill bit instrument **32** and the guide pin instrument **26**, leaving only the cannula instrument **30** in place. The passage **166** made by the drill bit instrument **32** remains. Subcutaneous access to the cancellous bone **152** has been accomplished.

The physician can now acquire the cavity forming instrument from the tray **126**. As FIG. **20** shows, the physician can advance the expandable structure **86** through the cannula instrument **30** and passage **166** into the interior volume of the vertebral body **148**, as FIG. **21** also shows. The structure **86** is in its normally collapsed and not expanded condition during deployment. The stylet **96** or **102** is inserted in the lumen **94** of the catheter tube **78** to provide added stiffness to the structure **86** while being passed through the cannula instrument **30**.

As shown in phantom lines in FIG. **20**, the physician can, if desired, reconnect the handle **60** to the cannula instrument **30**, to help stabilize the cannula instrument **30** while deploying the structure **86**. The second passage **74** of the handle accommodates the catheter tube **78** and the structure **86**, when collapsed.

As FIG. **21** shows, the structure **86** is oriented in the desired way in the passage **166**. As before explained, the bent stylet **102** can aid in this task. Before, during, or after the orientation process, the stylet **96** or **102** can be withdrawn (as FIG. **21** shows), to open the lumen **94** for use to pass a rinsing liquid or negative aspiration pressure.

Sterile liquid is conveyed under pressure from the source **92** through the lumen **88** into the structure **86**. As FIG. **22** shows, the structure **86** expands inside bone. Expansion of the structure **86** compresses cancellous bone **152** in the vertebral body **148**.

The compression forms an interior cavity **168** in the cancellous bone **152**. As FIG. **23** shows, subsequent collapse and removal of the structure **86** leaves the cavity **168** in a condition to receive a filling material.

The compaction of cancellous bone **152** can also exert interior force upon cortical bone, making it possible to elevate or push broken and compressed bone back to or near its original prefracture, or other desired, condition.

Upon formation of the cavity **168**, the physician acquires the syringe **104** and injection nozzle **106** from the kit **12**. As FIG. **24** shows, the physician fills the syringe chamber **110** with the desired volume of filling material **170**. As FIG. **25** shows, the physician attaches the nozzle **106** to the filled syringe **104**. As FIG. **26** shows, the physician inserts the nozzle **106** a selected distance beyond the distal end **36** of the cannula instrument **30** and into the cavity, guided by the markings **116**.

As shown in phantom lines in FIG. **26**, the handle **60** can remain attached to the cannula instrument **30** to provide stability, as the second passage **74** of the handle accommodates the nozzle **106**.

As FIG. **27** shows, the physician manually advances the piston **112** to cause the material **170** to flow through and out of the nozzle **106** and into the cavity. As material **170** fills the cavity, the physician withdraws the nozzle from the cavity and into the cannula instrument **30**. The cannula instrument **30** channels the material **170** flow toward the cavity **168**. As FIG. **28** shows, the cement material **170** flows in a stream into the cavity **168**.

If the selected material **170** is bone cement, the cement material **170** is placed into the syringe chamber **110** shortly after it is mixed from two materials (e.g., in an external mixing device), while it is in a low viscosity, relatively free flowing liquid state, like a thin pancake batter. In time (e.g., about two minutes after mixing), the consistency of the cement material **170** will change to a substantially putty-like character.

The physician operates the syringe **104** to expel the cement material **170** from the chamber, through the nozzle **106**, first into the cavity and then into the cannula instrument **30**. Typically, at the end of the syringe injection process, material **170** should extend from the cavity and occupy about 40% to 50% of the cannula instrument **30**.

When a desired volume of cement is expelled from the syringe **104**, the physician withdraws the nozzle **106** from the cannula instrument **30**, as FIG. **29** shows. The physician may first rotate the syringe **104** and nozzle **106**, to break loose the material **170** in the nozzle **106** from the ejected bolus of material **170** occupying the cannula instrument **30**.

The physician acquires the tamping instrument **108** from the kit **12**. As FIG. **30** shows, the physician advances the tamping instrument **108** through the cannula instrument **30**. As phantom lines in FIG. **30** show, the handle **60** can remain attached to the cannula instrument **30** to provide stability, as the second passage **74** of the handle accommodates the tamping instrument **108**.

The distal end of the tamping instrument **108** contacts the residual volume of cement material **170** in the cannula instrument **30**. As FIGS. **30** and **31** show, advancement of the tamping instrument **108** displaces progressively more of the residual material **170** from the cannula instrument **30**, forcing it into the cavity **168**. The flow of material **170** into the cavity **168**, propelled by the advancement of the tamping instrument **108** in the cannula instrument **30**, serves to uniformly distribute and compact the material **170** inside the cavity **168**, without the application of undue pressure.

The use of the syringe **104**, nozzle **106**, and the tamping instrument **108** allows the physician to exert precise control when filling the cavity with material **170**. The physician can immediately adjust the volume and rate of delivery according to the particular local physiological conditions encountered. The application of low pressure (i.e., no greater than 360 psi), which is uniformly applied by the syringe **104** and the tamping instrument **108**, allows the physician to respond to fill volume and flow resistance conditions in a virtually instantaneous fashion. The chance of overfilling and leakage of material **170** outside the cavity is significantly reduced.

When the physician is satisfied that the material **170** has been amply distributed inside the cavity **168**, the physician withdraws the tamping instrument **108** from the cannula instrument **30**. The physician preferably first twists the tamping instrument **108** to cleanly break contact with the material **170**. The handle **60** can now be removed and the cannula instrument **30** withdrawn, as FIG. **32** shows. The incision site is sutured closed. The bone treatment procedure is concluded.

Eventually the material **170**, if cement, will harden a rigid state within the cavity **168**. The capability of the vertebral body **148** to withstand loads is thereby improved.

The selected material **170** can be an autograft or allograft bone graft tissue collected in conventional ways. For

example, the graft material can be in paste form, as described by Dick, "Use of the Acetabular Reamer to Harvest Autogenic Bone Graft Material: A Simple Method for Producing Bone Paste," *Archives of Orthopaedic and Traumatic Surgery* (1986), 105: 235–238, or in pellet form, as described by Bhan et al, "Percutaneous Bone Grafting for Nonunion and Delayed Union of Fractures of the Tibial Shaft," *International Orthopaedics (SICOT)* (1993) 17: 310–312, both of which are incorporated herein by reference. Alternatively, the bone graft tissue can be obtained using a Bone Graft Harvester, which is commercially available from SpineTech. Using a funnel, the paste or pellet graft tissue material is loaded into the cannula instrument **30**. The tamping instrument **108** is then advanced into the cannula instrument **30** in the manner previously described, to displace the paste or pellet graft tissue material out of the cannula instrument **30** and into the cavity.

The selected material **170** can also comprise a granular bone material harvested from coral, e.g., ProOsteon™ calcium carbonate granules, available from Interpore. The granules are loaded into the cannula instrument **30** using a funnel and advanced into the cavity using the tamping instrument **108**.

The selected material **170** can also comprise demineralized bone matrix suspended in glycerol (e.g., Grafton™ allograft material available from Osteotech), or SRS TM calcium phosphate cement available from Norian. These viscous materials, like the bone cement previously described, can be loaded into the syringe **104** and injected into the cavity using the nozzle **106**, which is inserted through the cannula instrument **30** into the cavity. The tamping instrument **108** is used to displace residual material from the cannula instrument **30** into the cavity, as before described.

The selected material **170** can also be in sheet form, e.g. Collagraft™ material made from calcium carbonate powder and collagen from bovine bone. The sheet can be rolled into a tube and loaded by hand into the cannula instrument **30**. The tamping instrument **108** is then advanced through the cannula instrument, to push and compact the material in the cavity.

VI. Alternative Embodiments

The use of low pressure delivery of material **170** frees the system **10** from the need to accommodate relatively large diameter, high pressure delivery devices. The interior diameter of the cannula instrument **30** can be downsized accordingly, thereby minimizing the dimensions of the subcutaneous pathway to gain access to the targeted bone region.

Typically, when low pressure material injection instruments are used, the largest tool that the reduced-diameter cannula instrument must accommodate is the expandable cavity-forming structure **82**. The structure **82** presents a minimal profile during deployment, as it can be collapsed and, if desired, a lubricous coating may also be applied to the exterior of the structure **82** to facilitate its passage through the reduced-diameter cannula instrument.

A. Low Pressure Material Injection Instruments

FIG. **33** exemplifies low pressure material injection instruments **180** and **182** that function in association with a cannula instrument **184** having a reduced interior diameter, e.g. only about 3.4 mm or less.

One instrument **180** comprises a reduced-diameter nozzle. As FIG. **33** shows, the nozzle **180** is sized to pass through the reduced-diameter cannula instrument **184**, to thereby pass into bone in the manner previously shown in FIG. **26**. The reduced-diameter nozzle **180** connects by a threaded connector **186** to the syringe **104**. For material strength, despite its reduced dimension, the nozzle **180** is preferably formed from a rigid metal material, e.g., stainless steel.

As FIG. **33** shows, the reduced-diameter nozzle **180** also includes measured markings **188** along its length, as previously described. The markings **188** include a set point **190**, as previously described, which aligns with the proximal end of the cannula instrument **184** when the distal ends of the cannula instrument **184** and the nozzle **180** align.

The other reduced diameter instrument **182** comprises a stylet, which is sized to pass through the interior bore of the nozzle **180**. The stylet **182** includes a handle **192**, which rests on the proximal connector **186** of the nozzle **180** when the stylet **182** is fully inserted into the nozzle **180**. When the handle **192** is rested, the distal ends of the stylet **182** and nozzle **180** align. The presence of the stylet **182** inside the nozzle **180** closes the interior nozzle bore.

In use, the nozzle **180** is coupled to the syringe **104** and inserted through the cannula instrument **184** into the material-receiving cavity **168** formed in cancellous bone, in the same manner shown in FIG. **26**. Material in the syringe **104** is injected at low pressure through the nozzle **180** into the cavity **168**. As before explained, as the cavity **168** progressively fills with material, the nozzle **180** is withdrawn back into the cannula instrument **184**. Typically, when the injection of material is completed, material extends from the cavity **168** and occupies about 40% to 50% of the cannula instrument **184**.

At this point, the nozzle **180** can be fully withdrawn from the cannula instrument **184** and unthreaded from the syringe **104**. The stylet **182** can be advanced into the nozzle **180**, to bring the handle **192** at rest against the connector **186**, thereby clearing residual material from the nozzle **180**. The nozzle **180** and stylet can then be inserted as a nested unit into the cannula instrument **184**. Nested together, the nozzle **180** and stylet **182** form a tamping instrument. Upon advancement through the cannula instrument **184**, the nested nozzle **180** and stylet **182** displace residual material from the cannula instrument **184** into the cavity **168**, in generally the same manner as previously shown in FIGS. **30** and **31**, thereby uniformly compacting material within the cavity **168** in a controlled fashion and without undue pressure.

Alternatively, a single-piece tamping instrument, separate from the nozzle **180**, can be provided, downsized to fit through the reduced-diameter cannula instrument **184**. In this embodiment, the stylet **182** is not necessary, unless it is desired to reclaim material from the nozzle.

B. Cavity Forming Instrument

FIG. **34** shows a cavity forming instrument **194** intended to be deployed through the reduced-diameter cannula instrument **184**, shown in FIG. **33**. In many respects, the instrument **194** is like the instrument **76**, previously described and shown in FIG. **4A**, and common reference numerals will be assigned to common structural elements. The instrument **184** includes a flexible catheter tube **78** having a proximal end **80** and a distal end **82**. The proximal end **80** carries a handle grip **84**, and the distal end **82** carries an expandable structure **86**, which, when deployed in bone, compacts cancellous bone and forms the cavity **168**.

Unlike the previously-described instrument **76**, the instrument **194** carries an introducer sleeve **196**. The introducer sleeve **196** slides along the catheter tube **78** between the handle grip **84** and the expandable structure **86**. The introducer sleeve **196** includes a tubular main body **198** with a forward collar **200** and a rear collar **202**.

The introducer sleeve **196** normally occupies an advanced position on the instrument **194**, as shown in FIG. **35**. In this

position, the main body **198** overlies and surrounds the expandable structure **86**. The main body **198** is sized to compress the structure **86** to an outside diameter that is slightly less than the interior diameter of the reduced-diameter cannula instrument **184**.

As FIG. **35** shows, when the introducer sleeve **196** occupies the advanced position, the forward collar **200** extends beyond the distal end of the compressed expandable structure **82**. As FIG. **36** shows, in this position, the forward collar **200** presents itself for engagement with the proximal end **204** of the cannula instrument **184**. The forward collar **200** is sized to have an interior diameter that makes friction-fit engagement about the proximal end **204** of the cannula instrument **184**.

As FIG. **36** shows, when it is time to deploy the expandable structure **86** through the cannula instrument **184**, the physician engages the forward collar **200** of the introducer sleeve **196** in a friction fit about the proximal end **204** of the cannula instrument **184**. As FIG. **37** shows, advancing the catheter tube **78** moves the compressed structure **86** through the main body **198** of the sleeve **196** and into the bore of the cannula instrument **184**. The engagement of the forward collar **200** about the proximal cannula end **204** aligns the axis of the structure **86** with the axis of the cannula instrument **184**, while compressing the structure **86** to a diameter smaller than the interior of the cannula instrument **184**. Upon advancement of the catheter tube **78**, the introducer sleeve **196** guides the structure **86** into the cannula instrument **194** without tearing or other damage.

Once the expandable structure **86** is advanced through the cannula instrument **184** and into bone, the physician can slide the introducer sleeve **196** rearward away from the proximal cannula end **204**, to break the friction fit between the end **204** and the forward sleeve. As FIG. **34** shows, the rear collar **202** of the sleeve **196** is sized to make a snap fit engagement about a stem **206**, which surrounds the catheter tube **78** near the handle **84**. The snap fit engagement stabilizes the position of the sleeve **196** during subsequent use and manipulation of the cavity-forming instrument **194**.

The features of the invention are set forth in the following claims.

We claim:

1. Apparatus for delivering material into bone comprising

a cannula for establishing a subcutaneous path into bone and including at least one radiopaque marker, and

a tamping instrument having a tamping terminus,

the tamping instrument being sized and configured for manipulation independent of the cannula to enable insertion of the tamping instrument into the cannula, advancement of the tamping terminus in the cannula to urge material residing in the cannula into bone, and withdrawal of the tamping terminus from the cannula.

2. Apparatus according to claim **1**

wherein the cannula has a length, and

wherein the length of the tamping instrument exceeds the length of the cannula.

3. Apparatus according to claim **1**

wherein a removable handle is carried by the proximal end of the cannula.

4. Apparatus according to claim **1**

wherein handle is carried by the proximal end of the tamping instrument.

5. Apparatus according to claim **4**

wherein, when the tamping instrument is fully inserted into the cannula, the handle is adjacent the proximal end of the cannula.

6. Apparatus according to claim **1**

wherein the cannula comprises a generally rigid material.

7. Apparatus according to claim **1**

wherein the tamping instrument comprises a generally rigid material.

8. Apparatus according to claim **1**

wherein the tamping instrument has a blunt distal end.

9. Apparatus according to claim **1**

wherein the cannula has a blunt distal end.

10. Apparatus according to claim **1**

wherein the tamping instrument and the cannula each have a blunt distal end.

11. Apparatus according to claim **1**

further comprising a delivery device to convey material into the cannula.

12. Apparatus according to claim **1**

wherein the tamping instrument includes at least one marking to visually gauge the advancement the terminus relative to the distal end of the cannula.

13. Apparatus according to claim **12**

wherein the at least one marking indicates when the distal end of the tamping instrument is aligned with the distal end of the cannula instrument.

14. Apparatus according to claim **1**

wherein the tamping instrument includes a set point marking spaced from the terminus at a distance generally equal to the length of the cannula.

15. Apparatus according to claim **13**

wherein the tamping instrument includes at least one additional marking to visually gauge advancement of the terminus relative to the distal end of the cannula.

16. Apparatus according to claim **1**

in the tamping instrument includes at least one radiopaque marker.

17. Apparatus according to claim **1**

wherein the cannula is plastic.

18. Apparatus according to claim **17**

wherein the tamping instrument is plastic.

19. Apparatus according to claim **1**

wherein the tamping instrument has a substantially constant diameter along its length.

20. Apparatus according to claim **1**

wherein the material is bone cement.

21. Apparatus according to claim **1**

wherein the material comprises autograft material.

22. Apparatus according to claim **1**

wherein the material comprises allograft material.

23. Apparatus according to claim **1**

wherein the material comprises calcium carbonate.

24. Apparatus according to claim **1**

wherein the material comprises demineralized bone matrix material.

25. Apparatus according to claim **1**

wherein the material comprises calcium phosphate.

26. Apparatus for delivering material into bone comprising

a cannula for establishing a subcutaneous path into bone, and

a tamping instrument having a tamping terminus and including at least one marking to visually gauge the advancement of the terminus relative to the distal end of the cannula,

the tamping instrument being sized and configured for manipulation independent of the cannula to enable

insertion of the tamping instrument into the cannula, advancement of the tamping terminus in the cannula to urge material residing in the cannula into bone, and withdrawal of the tamping terminus from the cannula.

27. Apparatus according to claim 26

wherein the at least one marking indicates when the distal end of the tamping instrument is aligned with the distal end of the cannula instrument.

28. Apparatus according to claim 26

wherein the tamping instrument includes a set point marking spaced from the terminus at a distance generally equal to the length of the cannula.

29. Apparatus according to claim 27

wherein the tamping instrument includes at least one additional marking to visually gauge advancement of the terminus relative to the distal end of the cannula.

30. Apparatus for delivering material into bone comprising

a cannula for establishing a subcutaneous path into bone, the cannula including at least one radiopaque marker and being sized and configured to accept insertion and withdrawal of a first instrument in the cannula, and

a tamping instrument separate from the first instrument having a tamping terminus,

the tamping instrument being sized and configured for manipulation independent of the cannula to enable insertion of the tamping instrument into the cannula and advancement of the tamping terminus in the cannula to urge material residing in the cannula into the bone.

31. Apparatus for delivering material into bone comprising

a cannula for establishing a subcutaneous path into bone, the cannula being sized and configured to accept insertion and withdrawal of a first instrument in the cannula, and

a tamping instrument separate from the first instrument having a tamping terminus,

the tamping instrument including at least one marking to visually gauge the advancement of the terminus relative to the distal end of the cannula and being sized and configured for manipulation independent of the cannula to enable insertion of the tamping instrument into the cannula and advancement of the tamping terminus in the cannula to urge material residing the cannula into bone.

32. Apparatus according to claim 31

wherein the at least one marking indicates when the distal end of the tamping instrument is aligned with the distal end of the cannula instrument.

33. Apparatus according to claim 31

wherein the tamping instrument includes a set point marking spaced from the terminus at a distance generally equal to the length of the cannula.

34. Apparatus according to claim 33

wherein the tamping instrument includes at least one additional marking to visually gauge advancement of the terminus relative to the distal end of the cannula.

35. Apparatus for delivering material into bone comprising

a cannula for establishing a subcutaneous path into bone and including at least one radiopaque marker; and

a tamping instrument for advancement through the cannula comprising a body portion and a handle portion,

the handle portion having a cross-sectional area greater than the cross-sectional area of the body portion.

36. Apparatus for delivering material into bone comprising

a cannula for establishing a subcutaneous path into bone; and

a tamping instrument for advancement through the cannula including at least one marking to visually gauge the advancement of the terminus relative to the distal end of the cannula and comprising a body portion and a handle portion,

the handle portion having a cross-sectional area greater than the cross-sectional area of the body portion.

37. Apparatus according to claim 36

wherein the at least one marking indicates when the distal end of the tamping instrument is aligned with the distal end of the cannula instrument.

38. Apparatus according to claim 36

wherein the tamping instrument includes a set point marking spaced from the terminus at a distance generally equal to the length of the cannula.

39. Apparatus according to claim 38

wherein the tamping instrument includes at least one additional marking to visually gauge advancement of the terminus relative to the distal end of the cannula.

40. Apparatus for delivering material into bone comprising

a cannula for establishing a subcutaneous path into bone and including at least one radiopaque marker; and

a tamping instrument for advancement through the cannula comprising a body portion and a handle portion, the body portion being sized and configured to substantially fill the cannula when the tamping instrument is fully inserted into the cannula.

41. Apparatus for delivering material into bone comprising

a cannula for establishing a subcutaneous path into bone; and

a tamping instrument for advancement through the cannula including at least one marking to visually gauge the advancement of the terminus relative to the distal end of the cannula, and comprising a body portion and a handle portion, the body portion being sized and configured to substantially fill the cannula when the tamping instrument is fully inserted into the cannula.

42. Apparatus according to claim 41

wherein the at least one marking indicates when the distal end of the tamping instrument is aligned with the distal end of the cannula instrument.

43. Apparatus according to claim 41

wherein the tamping instrument includes a set point marking spaced from the terminus at a distance generally equal to the length of the cannula.

44. Apparatus according to claim 43

wherein the tamping instrument includes at least one additional marking to visually gauge advancement of the terminus relative to the distal end of the cannula.

45. Apparatus for delivering material into bone comprising

a cannula for establishing a subcutaneous path into bone and including at least one radiopaque marker; and

a tamping instrument for advancement through the cannula comprising a body portion and a handle portion, the body portion having a substantially constant diameter along its length.

46. Apparatus for delivering material into bone comprising

a cannula for establishing a subcutaneous path into bone; and

a tamping instrument for advancement through the cannula including at least one marking to visually gauge the advancement of the terminus relative to the distal end of the cannula and comprising a body portion and a handle portion, the body portion having a substantially constant diameter along its length.

47. Apparatus according to claim **46**

wherein the at least one marking indicates when the distal end of the tamping instrument is aligned with distal end of the cannula instrument.

48. Apparatus for delivering material into bone comprising

a cannula for establishing a subcutaneous path into bone; and

a tamping instrument for advancement through the cannula including a set point marking spaced from the terminus at a distance generally equal to the length of the cannula and comprising a body portion and a handle portion, the body portion having a substantially constant diameter along its length.

49. Apparatus according to claim **48**

wherein the tamping instrument includes at least one additional marking to visually gauge advancement of the terminus relative to the distal end of the cannula.

50. Apparatus for delivering material into bone comprising

a cannula for establishing a subcutaneous path into bone,

the cannula comprising a generally rigid material and including at least one radiopaque marker,

a tamping instrument comprising a generally rigid material and having a tamping terminus,

the tamping instrument being sized and configured for manipulation independent of the cannula to enable insertion of the tamping instrument into the cannula, advancement of the tamping terminus in the cannula to urge material residing in the cannula into bone, and withdrawal of the tamping terminus from the cannula, and

a handle carried by the proximal end of the tamping instrument.

51. Apparatus according to claim **50**

wherein the tamping instrument has a blunt distal end.

52. Apparatus according to claim **51**

wherein the cannula is sized and configured to accept insertion and withdrawal of a first instrument in the cannula, and

wherein the tamping instrument is separate from the first instrument.

53. Apparatus according to claim **52**

wherein the handle carried by the tamping instrument has a cross-sectional area greater than the cross-sectional area of the tamping terminus of the tamping instrument.

54. Apparatus according to claim **53**

wherein the tamping instrument is sized an configured to substantially fill the cannula.

55. Apparatus according to claim **54**

wherein the tamping instrument has a substantially constant diameter along its length.

56. Apparatus according to claim **50**

wherein the cannula has a length, and

wherein the length of the tamping instrument exceeds the length of the cannula.

57. Apparatus according to claim **56**

wherein the tamping instrument has a substantially blunt distal end.

58. Apparatus according to claim **57**

wherein the cannula is sized and configured to accept insertion and withdrawal of a first instrument in the cannula, and

wherein the tamping instrument and the first instrument are different instruments.

59. Apparatus according to claim **58**

wherein the handle carried by the tamping instrument has a cross-sectional area greater than the cross-sectional area of the tamping terminus of the tamping instrument.

60. Apparatus according to claim **59**

wherein the tamping instrument is sized and configured to substantially fill the cannula.

61. Apparatus according to claim **60**

wherein the tamping instrument has a substantially constant diameter along its length.

62. Apparatus according to claim **61**

wherein, when the tamping instrument fully occupies the cannula, the handle carried by the tamping instrument is adjacent the proximal end of the cannula.

63. Apparatus according to claim **62**

wherein the cannula has a blunt distal end.

64. Apparatus according to claim **63**

wherein a removable handle is carried by the proximal end of the cannula.

65. Apparatus according to claim **64**

wherein the tamping instrument has a generally blunt distal end.

66. Apparatus according to claim **65**

wherein the cannula is sized and configured to accept insertion and withdrawal of a first instrument in the cannula, and

wherein the tamping instrument is separate from the first instrument.

67. Apparatus according to claim **66**

wherein the handle carried by the tamping instrument has a cross-sectional area greater than the cross-sectional area of the tamping terminus of the tamping instrument.

68. Apparatus according to claim **67**

wherein the tamping instrument is sized and configured to substantially fill the cannula.

69. Apparatus according to claim **68**

wherein the tamping instrument has a substantially constant diameter along its length.

70. Apparatus according to claim **50**

wherein, when the tamping instrument fully occupies substantially the entire cannula, the handle carried the tamping instrument is adjacent the proximal end of the cannula.

71. Apparatus according to claim **70**

wherein the tamping instrument has a blunt distal end.

72. Apparatus according to claim **71**

wherein the cannula is sized and configured to accept insertion and withdrawal of a first instrument in the cannula, and

wherein the tamping instrument is separate from the first instrument.

73. Apparatus according to claim **72**

wherein the handle carried by the tamping instrument has a cross-sectional area greater than the cross-sectional area of the tamping terminus of the tamping instrument.

74. Apparatus according to claim 73

wherein the tamping instrument is sized and configured to substantially fill the cannula.

75. Apparatus according to claim 74

wherein the tamping instrument has a substantially constant diameter along its length.

76. Apparatus according to claim 70

wherein the cannula has a blunt distal end.

77. Apparatus according to claim 76

wherein a removable handle is carried by the proximal end of the cannula.

78. Apparatus according to claim 77

wherein the tamping instrument has a blunt distal end.

79. Apparatus according to claim 78

wherein the cannula is sized and configured to accept insertion and withdrawal of a first instrument in the cannula, and

wherein the tamping instrument is separate from the first instrument.

80. Apparatus according to claim 79

wherein the handle carried by the tamping instrument has a cross-sectional area greater than the cross-sectional area of the tamping terminus of the tamping instrument.

81. Apparatus according to claim 80

wherein the tamping instrument is sized and configured to substantially fill the cannula.

82. Apparatus according to claim 81

wherein the tamping instrument has a substantially constant diameter along its length.

83. Apparatus according to claim 50

wherein the cannula has a blunt distal end.

84. Apparatus according to claim 83

wherein the tamping instrument has a blunt distal end.

85. Apparatus according to claim 84

wherein the cannula is sized and configured to accept insertion and withdrawal of a first instrument in the cannula, and

wherein the tamping instrument is separate from the first instrument.

86. Apparatus according to claim 85

wherein the handle carried by the tamping instrument has a cross-sectional area greater than the cross-sectional area of the tamping terminus of the tamping instrument.

87. Apparatus according to claim 86

wherein the tamping instrument is sized and configured to substantially fill the cannula.

88. Apparatus according to claim 87

wherein the tamping instrument has a substantially constant diameter along substantially its entire length.

89. Apparatus according to claim 83

wherein a removable handle is carried by the proximal end of the cannula.

90. Apparatus according to claim 89

wherein the tamping instrument has a blunt distal end.

91. Apparatus according to claim 90

wherein the cannula is sized and configured to accept insertion and withdrawal of a first instrument in the cannula, and

wherein the tamping instrument is separate from the first instrument.

92. Apparatus according to claim 91

wherein the handle carried by the tamping instrument has a cross-sectional area greater than the cross-sectional area of the tamping terminus of the tamping instrument.

93. Apparatus according to claim 92

wherein the tamping instrument is sized and configured to substantially fill the cannula.

94. Apparatus according to claim 93

wherein the tamping instrument has a substantially constant diameter along its length.

95. Apparatus according to claim 50

wherein a removable handle is carried by the proximal end of the cannula.

96. Apparatus according to claim 95

wherein the tamping instrument has a blunt distal end.

97. Apparatus according to claim 95

wherein the cannula is sized and configured to accept insertion and withdrawal of a first instrument in the cannula, and

wherein the tamping instrument is separate from the first instrument.

98. Apparatus according to claim 95

wherein the handle carried by the tamping instrument has a cross-sectional area greater than the cross-sectional area of the tamping terminus of the tamping instrument.

99. Apparatus according to claim 95

wherein the tamping instrument is sized and configured to substantially fill the cannula.

100. Apparatus according to claim 95

wherein the tamping instrument has a substantially constant diameter along its length.

* * * * *

CERTIFICATE OF SERVICE

I, Maryellen Noreika, hereby certify that copies of the foregoing were caused to be served this 6h day of April, 2005 upon the following in the manner indicated:

BY HAND DELIVERY

Thomas L. Halkowski
FISH & RICHARDSON P.C.
919 N. Market Street, Suite 1100
P.O. Box 1114
Wilmington, DE 19899-1114

Maryellen Noreika (#3208)

CERTIFICATE OF SERVICE

I, Maryellen Noreika, hereby certify that copies of the foregoing were caused to be served this 13h day of April, 2005 upon the following in the manner indicated:

BY HAND DELIVERY

Thomas L. Halkowski
FISH & RICHARDSON P.C.
919 N. Market Street, Suite 1100
P.O. Box 1114
Wilmington, DE 19899-1114

Maryellen Noreika (#3208)