B-6

US005312333A

United States Patent [19]

Churinetz et al.

[11] Patent Number: 5,312,333

[45] Date of Patent: May 17, 1994

[54] **ENDOSCOPIC MATERIAL DELIVERY DEVICE**

[75] Inventors: **Robert Churinetz**, West Haven; **Jeffrey S. White**, Ridgefield, both of Conn.

[73] Assignee: **United States Surgical Corporation**, Norwalk, Conn.

[21] Appl. No.: **863,195**

[22] Filed: **Apr. 3, 1992**

[51] **Int. Cl.**[5] **A61M 5/00**

[52] **U.S. Cl.** **604/57**; 604/58; 604/140; 604/148

[58] **Field of Search** 604/57-61, 604/64, 140, 141, 143, 145-148

[56] **References Cited**

U.S. PATENT DOCUMENTS

1,642,950	9/1927	Haas	604/58
2,554,352	5/1951	Ward et al.	604/148
2,623,519	12/1952	Cohen	604/141
2,647,512	8/1953	Johnson	604/64
3,088,207	5/1963	Borsuk	604/61
3,561,433	2/1971	Kovach .	
3,744,493	7/1973	Booher et al.	604/60
3,934,584	1/1976	Corio	604/59
4,154,239	5/1979	Turley	604/61
4,237,871	12/1980	Bonnet .	
4,349,028	9/1982	Green .	
4,426,024	1/1984	Hogan et al.	604/141
4,522,621	6/1985	Cassou	604/140
4,597,753	7/1986	Turley	604/61
4,790,819	12/1988	Li et al.	604/59
4,944,726	7/1990	Hilal et al.	604/143
4,977,900	12/1990	Fehling et al. .	
5,015,233	5/1991	McGough et al.	604/146
5,024,656	6/1991	Gasaway et al.	604/141
5,046,486	9/1991	Grulke et al. .	
5,125,836	6/1992	Dragan et al. .	
5,129,882	7/1992	Weldon et al.	604/96
5,133,701	7/1992	Han	604/289
5,200,170	4/1993	McDow	604/289
5,221,259	6/1993	Weldon et al. .	
5,222,939	6/1993	Tiefenbrun et al. .	
5,224,931	7/1993	Kumar .	

FOREIGN PATENT DOCUMENTS

81392	6/1983	European Pat. Off.	604/61
0436353A1	10/1991	European Pat. Off. .	
3909999	3/1989	Fed. Rep. of Germany .	
84117	8/1935	Switzerland	604/148
26666	of 1903	United Kingdom	604/289

OTHER PUBLICATIONS

"Toy-Smoot Laparoscopic Hernioplasty", Toy et al., Surgical Laparoscopy & Endoscopy, vol. 1, No. 3, pp. 151-155, 1991.

"Use of an Oxidized, Regenerated Cellulose Absorbable Adhesion Barrier at Laparoscopy", Ricardo Azziz, M.D. et al., Journal of Reproduction Medicine, vol. 36, No. 7, Jul. 1991.

"Laparoscopic Application of Interceed (TC7) in the Pig", Michael P. Diamond et al. Journal of Gynecologic Surgery, vol. 5, No. 2, 1989.

"Cellulose Barrier cuts Adhesion Risk After Infertility Procedures", OB/GYN News, May 1-14, 1990.

Linksy et al., Journal of Reproductive Medicine, vol. 32, No. 1, Jan. 1987.

Diamond et al, Microsurgery 8: 198-200, 1987.

Fertility and Sterility, vol. 51, No. 6, Jun. 1989.

Intercede Product Literature, 1989.

Primary Examiner—Ralph Lewis

[57] **ABSTRACT**

A device for delivering a quantity of material endoscopically to an intended site of application within a body through an incision or entrance wound includes a handle portion with movable trigger means, and an endoscopic portion. A reservoir or cartridge containing material for delivery may be disposed in the handle or endoscopic portion of the delivery device. In operation, the trigger means may be operated in such a manner so as to cause a discharge of a metered quantity of material from the proximal end of the endoscopic tube.

18 Claims, 3 Drawing Sheets

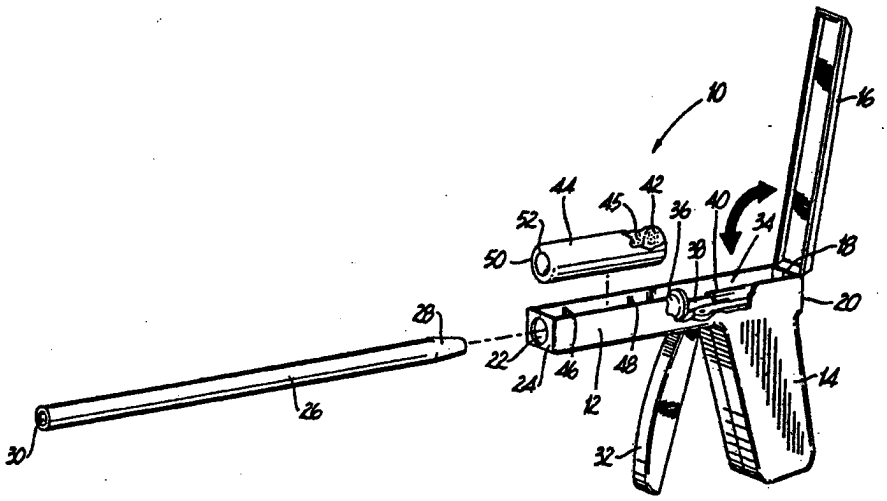

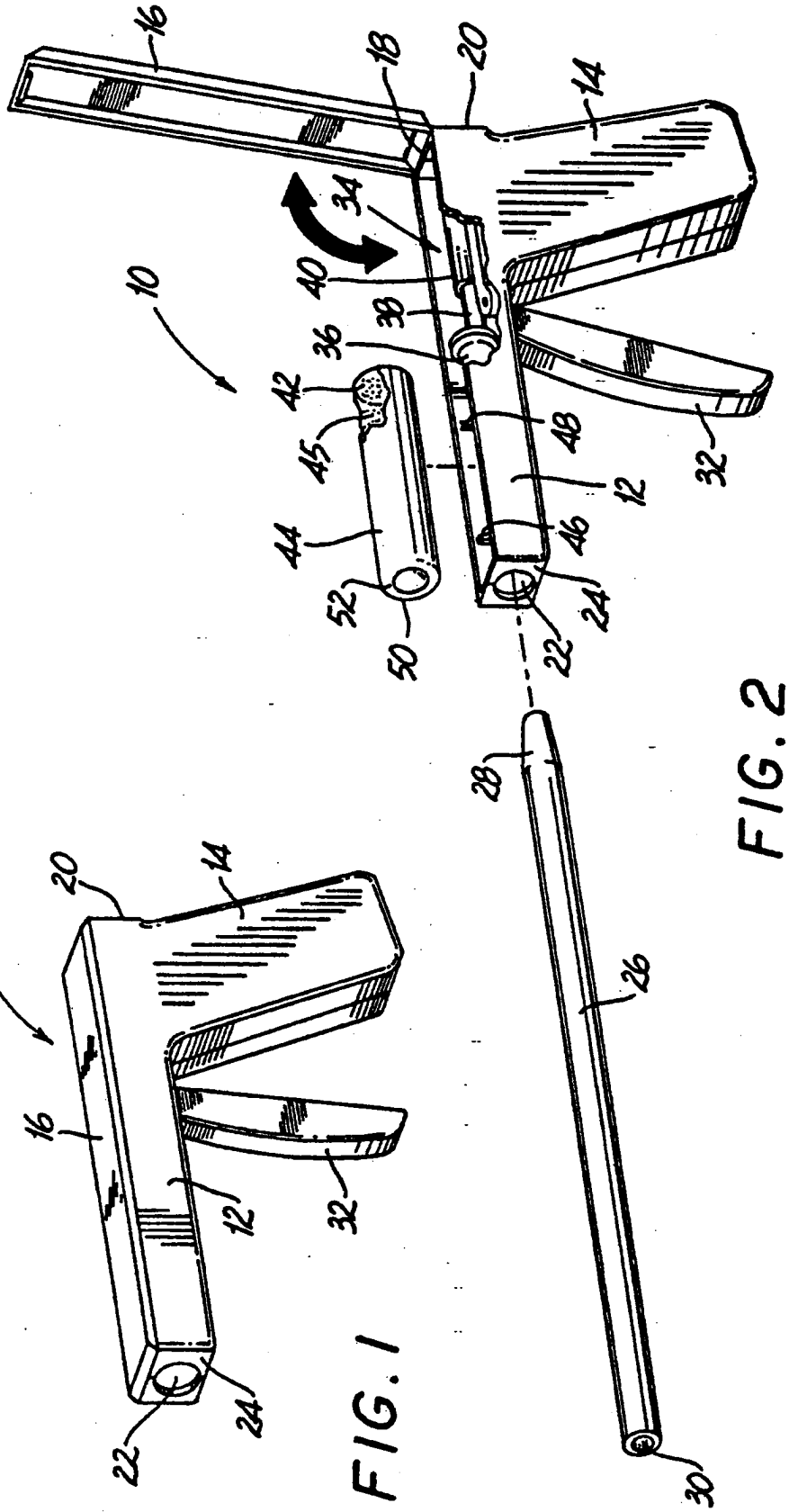
16
18
20
14
34
40
38
36
10
42
45
48
12
32
44
46
52
24
50
22
28
26
30

FIG. 2

10
20
14
16
12
32
24
22

FIG. 1

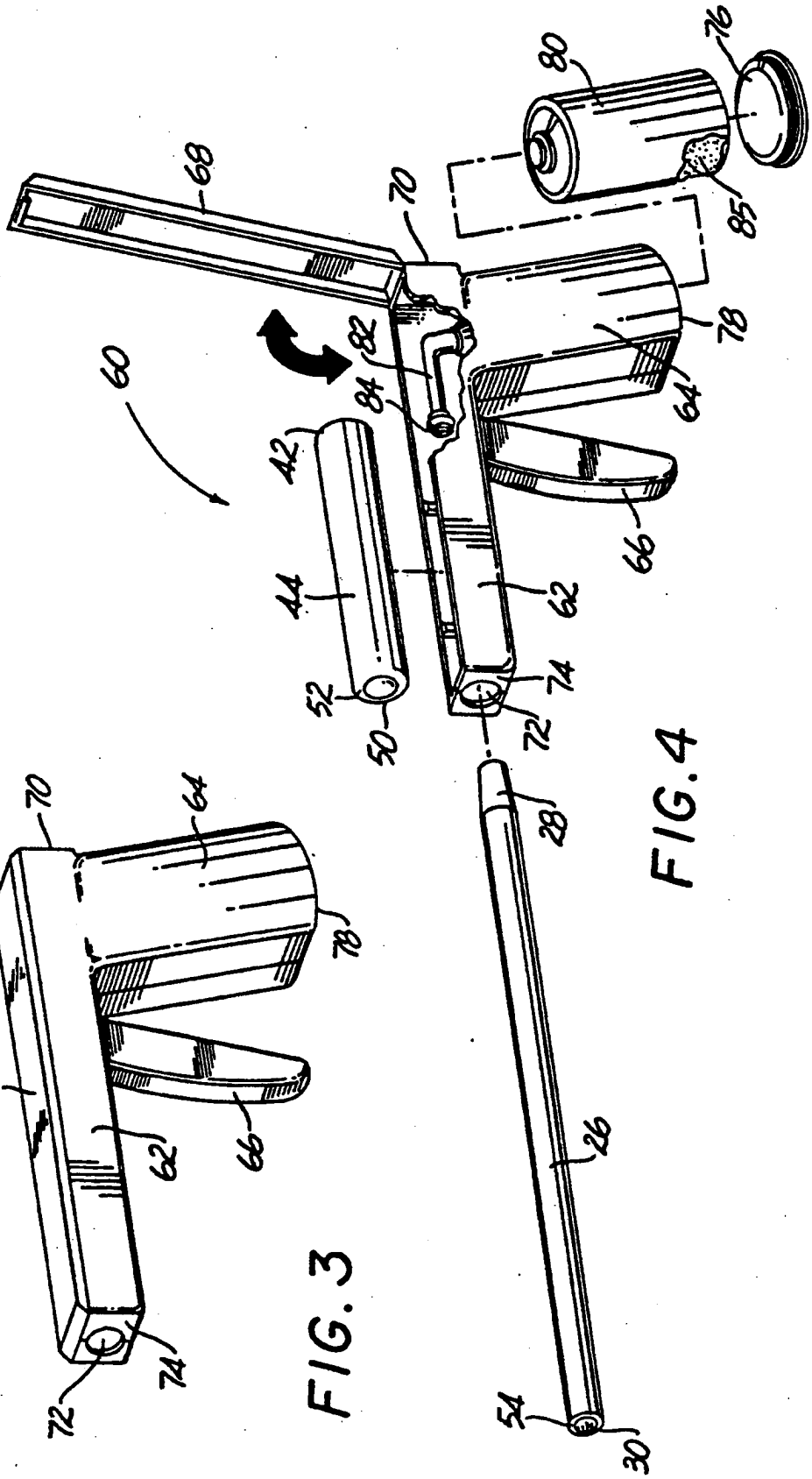
60
68
70
80
76
85
78
82
84
64
42
66
44
62
52
50
74
72
28
26
54
30

FIG. 4

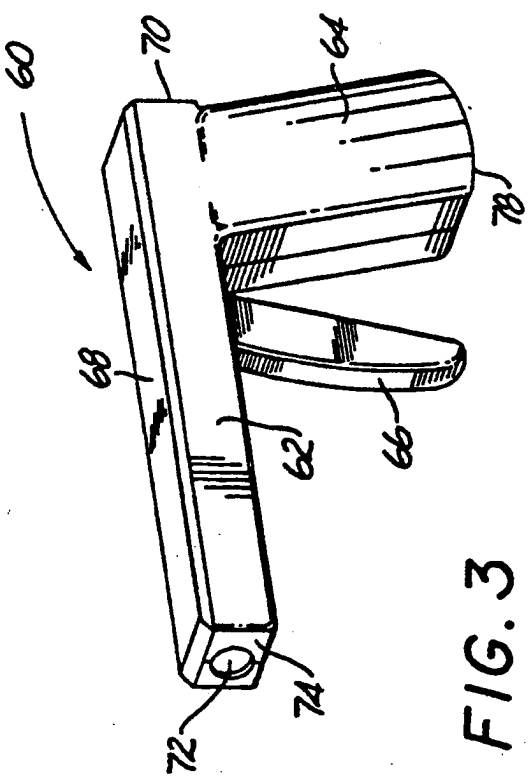
60
70
64
78
68
62
66
72
74

FIG. 3

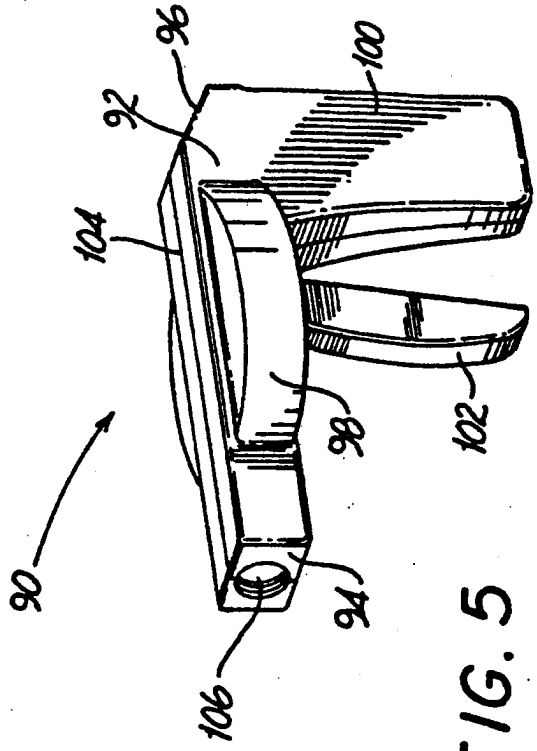

FIG. 5

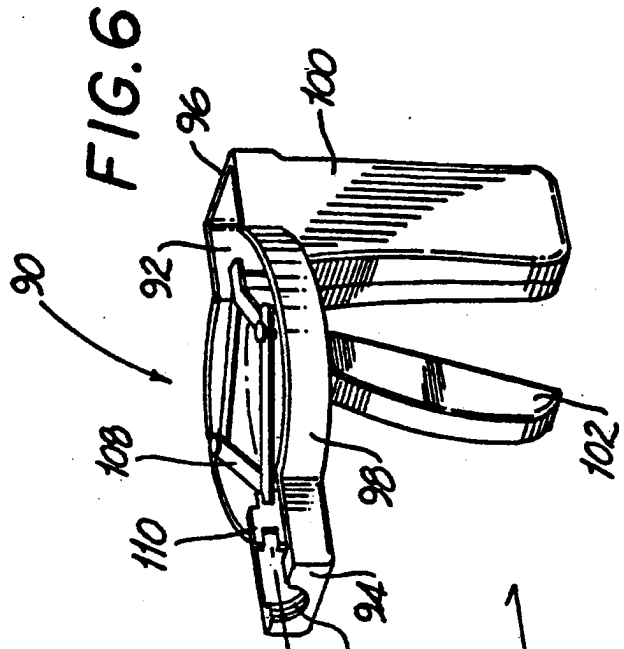

FIG. 6

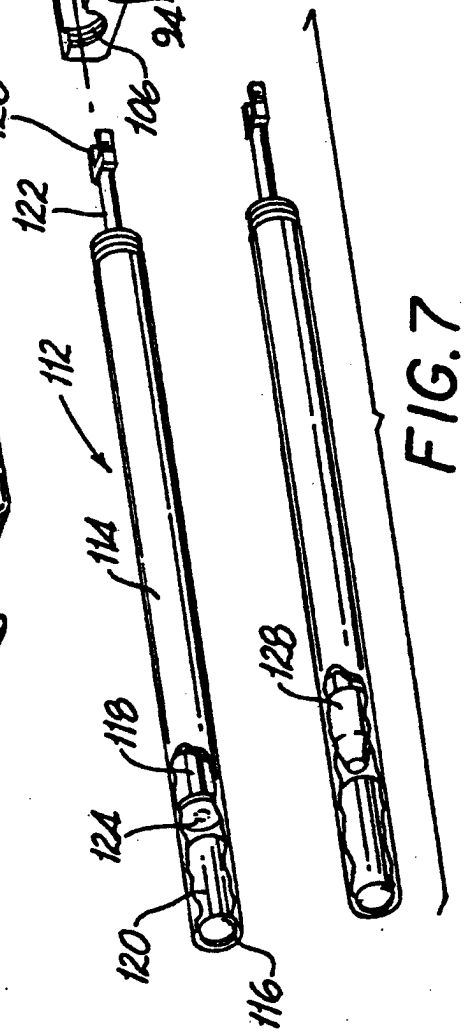

FIG. 7

ENDOSCOPIC MATERIAL DELIVERY DEVICE

BACKGROUND OF THE INVENTION

1. Field of the Invention

This invention relates to a device for delivering material to a remote location and more particularly, to an instrument for endoscopic delivery of a quantity of medicament or material to a remote location within the body.

2. Description of the Related Art

In laparoscopic procedures, surgery is performed through a small incision or entrance wound in the skin with the abdominal cavity expanded by gas insufflation. Laparoscopic procedures generally require that any instrumentation inserted into the body be sealed so that gases do not enter or exit the body through the incision. Further, laparoscopic procedures often require the surgeon to operate on organs or tissues which are far removed from the incision, thereby requiring that any instruments to be used in such procedures be both elongated and narrow.

In open surgery, hemostasis is achieved by using agents such as collagen and cellulose in either a preformed pad or a loose powdered form. These hemostatic agents are applied to sites of hemorrhage or bleeding intraoperatively and, due to their thromboplastic nature, cause cessation or reduction of bleeding. A hemostatic collagen paste which may be used in this manner is disclosed in U.S. Pat. No. 4,891,359 to Saferstein et al. These materials are easily applied by hand during open surgery because the site of intended application is readily accessible.

The use of hemostatic agents and other medicaments in laparoscopic surgery poses unique problems due to the limited access to the site of application and the difficulty of passing material to the site via a cannula or trocar. During laparoscopic procedures, materials, such as adhesion barriers, have been delivered to an intended site of application by grasping the material with a micrograsper or other similar instrument, and extending the instrument through a cannula placed in an incision or entrance wound. However, it would be difficult to repetitively deliver a metered quantity of fluid or powdered material in such a manner. Once the material has been introduced into the abdominal cavity, post-insertion manipulation of the material is also extremely difficult.

In addition, because of the difficulty and expense of cleaning and sterilizing surgical instruments between uses, there is an increasing demand for instruments which are disposable after use in a single surgical procedure rather than permanent and reusable. Additionally, instrumentation which requires the use of external power supplies is less efficient for clinical applications.

SUMMARY OF THE INVENTION

An endoscopic device is disclosed for delivering a quantity of material to an organ or tissue area within a body. The device includes an endoscopic portion having a passageway formed therein, material containment means communicating with said passageway and actuating means for causing the delivery of a quantity of material from the material containment means. The device may further include separate propellant containment means for dispensing powder or particulate medicaments. Alternatively, the material containment means may also contain a propellant. The material containment means may comprise a reservoir integrally formed in the endoscopic portion or in a handle portion. Preferably, the containment means comprises a removable cartridge.

The actuating means may be pivotal and may include a trigger. A plunger means operatively connected to the trigger may also be included for advancing distally against the containment means in such a manner as to cause a predetermined quantity of medicament to be expelled from the containment means such as, for example by a propellant.

In another aspect the present invention, the material for delivery to the intended site of application is disposed in the axial passageway of the endoscopic portion of the delivery device. In this instance, the material may comprise a preformed hemostatic treatment pad or in the alternative the material may comprise a fluid or powdered medicament. Actuating means are operatively connected to the endoscopic portion for causing a predetermined quantity of the material to be delivered from the endoscopic portion.

In yet another aspect of the present invention, the delivery device is provided with tamping means for manipulating the material delivered.

Further features of the invention will become more apparent from the accompanying drawings and the following detailed description of the invention.

BRIEF DESCRIPTION OF THE DRAWINGS

Preferred embodiments of the invention will be described hereinbelow with reference to the drawings. In the drawings and the description which follows, "proximal" means the end closest to the operator and "distal" means the end farthest from the operator.

FIG. 1 is a perspective view of the handle portion of an endoscopic material delivery device of the subject invention;

FIG. 2 is a perspective view, with parts broken away, of a loaded endoscopic material delivery device;

FIG. 3 is a perspective view of an alternate embodiment of the handle portion of an endoscopic material delivery device of the subject invention;

FIG. 4 is a perspective view, with parts broken way, of a loaded endoscopic material delivery device;

FIG. 5 is a perspective view of a third embodiment of the handle portion of the endoscopic material delivery device of the subject invention;

FIG. 6 is a perspective view, with portions removed, of a loaded endoscopic material delivery device; and

FIG. 7 is a perspective view in partial cutaway of an alternative cartridge means adapted for use in the device of FIG. 6.

DETAILED DESCRIPTION OF THE PREFERRED EMBODIMENTS

A preferred embodiment of the endoscopic material delivery device of the subject invention is illustrated in FIGS. 1 and 2 and is designated generally by reference numeral 10. The delivery device 10 includes a pistol-like handle portion having a longitudinal barrel portion 12 with a grip portion 14 depending transversely from the barrel portion 12. Portion 14 may be generally rectangular in cross-section as shown or may have any configuration which may be easily and comfortably gripped during operations. Barrel portion 12 includes a cover 16 which is attached thereto by an integral hinge 18 located at the proximal end 20 of the barrel portion 12. A

port 22 is formed in the distal end 24 of barrel portion 12 for receiving an elongated disposable endoscopic shaft 26. More particularly, a tapered proximal end 28 of endoscopic shaft 26 may be inserted through the port 22 formed in barrel portion 12 so as to be frictionally or mechanically engaged therein for operations. The endoscopic shaft 26 is formed with an axial passageway 30 through which a metered quantity of material may be delivered to the intended site of application, for example, within the abdominal cavity.

The delivery device 10 further includes a movable trigger 32 which depends transversely from barrel portion 12 adjacent portion 14. In particular, trigger 32 is mechanically linked to a piston mechanism 34 disposed in the barrel portion 12. Piston mechanism 34 includes a circular plunger 36 depending from a shaft 38 which is slidably maintained in a sleeve 40. The trigger 32 is operative to cause shaft 38 to slide within sleeve 40 so that plunger 36 may be moved into contact with the rear end 42 of containment means 44, here shown as a replaceable cylindrical containment cartridge. It should be understood that the containment means 44 may alternatively be a reservoir integrally formed within the barrel 12.

Cartridge 44 which may contain a propellent 45 and-/or a powdered or fluid medicament, is maintained in barrel portion 12 on a pair of spaced apart support flanges 46 and 48 disposed adjacent the distal end 24 of barrel portion 12. Furthermore, cartridge 44 may be formed with a penetrable membrane 50 disposed at the front end 52 thereof. The membrane 50 is easily pierced by the tapered end 28 of the endoscopic shaft 26 which extends through the port 22 as the cartridge 44 is urged in a distal direction by the plunger 36.

While described in terms of delivering a medicament, the device of the present invention can be used to deliver a wide variety of fluid, powdered or solid materials. Such materials include, but are not limited to pharmaceuticals, materials having anti-adhesion properties, anti-coagulants, growth factors, osteogenic factors, antibiotics, anti-fungals, immunosuppressive agents, anti-inflammatory agents, irrigating fluids, disinfectants, preservatives, diagnostic agents (dyes, etc.) antihistamines, hormones, enzymes, peptides and/or steroids. Solid materials which may be delivered include woven materials, gels, capsules, molded materials and any other solid form which fits within or may be made to fit within the endoscopic portion of the device.

In operation, a cartridge 44 is placed in support flanges 46 and 48 in the barrel portion 12 of the delivery device 10 and the cover 16 is closed. Thereupon, the endoscopic shaft 26 is inserted into port 22 at end 24 of barrel portion 12. At such a time, the tapered end 28 of endoscopic shaft 26 is disposed proximate the membrane 50 at the front end 52 of cartridge 44. Thereafter, the end 54 of endoscopic shaft 26 is inserted through a cannula (not shown) previously inserted in an incision or entrance wound. When trigger 32 is depressed, the piston mechanism 34 slides forward and plunger 36 is urged against the rear end 42 of cartridge 44 driving the cartridge distally until membrane 50 is pierced by the tapered end 28 of endoscopic portion 26 causing the propellent therein to propel a metered quantity of medicament through the passageway 30 in endoscopic shaft 26 to be delivered into the abdominal cavity.

When cartridge 44 contains a fluid medicament, a first squeeze of the trigger 32 will cause plunger 36 to contact the rear end 42 of cartridge 44. Upon release of the trigger spring means (not shown) urge the trigger back to its original position. Subsequent squeezes of the trigger 32 will move the plunger 36 a predetermined distance into cartridge 44, thus forcing a metered amount of medicament out of cartridge 44 and into the endoscopic portion of the instrument. If the fluid medicament has a high viscosity, a series of squeezes may be required to prime the instrument before the metered amount of medicament is delivered out the distal end of the endoscopic portion.

In a variation of this embodiment, the passageway 30 of endoscopic portion 26 serves as the containment means and is pre-loaded with the medicament to be delivered. Actuating means may directly cause the material to be expelled from the endoscopic portion or, as shown in the figures, the actuating means may act upon container 44 which contains a non-toxic, inert delivery substance which merely acts to force a metered quantity of the medicament out of the endoscopic portion. That is, as plunger 36 advances within cartridge 44, a metered amount of the delivery substance is forced out of cartridge 44 and into endoscopic portion 26, which in turn forces a metered quantity of the medicament out of the distal end of passageway 30. A series of endoscopic portions each loaded with a different medicament may be provided in a kit thus allowing the same handle portion to deliver each medicament as needed without mixing or contamination of the individual medicaments.

Referring to FIGS. 3 and 4, another embodiment of the endoscopic material delivery device of the subject invention is illustrated and is designated generally by reference numeral 60. Delivery device 60 includes a handle portion having a longitudinal barrel portion 62 and a hollow grip portion 64 having a generally circular cross-section projecting transversely from barrel portion 62. A movable trigger 66 depends transversely from barrel portion 62 adjacent portion 64. Barrel portion 64 includes a cover 68 integrally attached at the proximal end 70 thereof and a port 72 formed in the proximal end 74 thereof for receiving the tapered end 28 of an endoscopic shaft 26. As stated previously, the tapered end 28 of the endoscopic shaft 26 is provided for piercing the penetrable membrane 50 at the front end of cartridge 44. The delivery device 60 is further provided with a cap member 76 which is threadably engaged in the bottom 78 of handle portion 64 and which may be readily removed to insert a canister of compressed gas 80.

Trigger 66 is mechanically linked to the canister of compressed gas 85 80 in a known manner known, such as that described in U.S. Pat. No. 4,349,028, the entire disclosure of which is incorporated herein by reference. In addition, a conduit element 82 in barrel portion 62 is connected to the compressed gas canister 80. Conduit element 82 conducts compressed gas from the canister 80 to the rear end 42 of replaceable cartridge 44 which preferably contains a medicament in a powdered form.

In operation, the trigger 66 may be depressed in such a manner as to cause compressed gas to exit canister 80. Thereupon, compressed gas from canister 80 is conducted through conduit element 82 in such a manner as to exert a force upon the rear end 42 of cartridge 44, thereby causing a metered quantity of medicament to be delivered from cartridge 44 through the endoscopic shaft 26 to the intended site of application.

FIGS. 5 and 6 depict another embodiment of the endoscopic material delivery device of the subject invention designated generally by reference numeral 90.

The delivery device 90 includes a longitudinal barrel portion 92 having a proximal end 94, a distal end 96 and a substantially circular midsection 98. A grip portion 100 and a trigger 102 project transversely from barrel portion 92. Barrel portion 92 is provided with a cover member 104 and a threaded port 106 formed in the proximal end 94 thereof. A four bar linkage 108 is operatively disposed in the circular midsection 98 of barrel portion 92. Linkage 108 includes a generally U-shaped key 110 arranged adjacent the proximal end 94 of barrel portion 92. Linkage 108 is operably connected to trigger 102 which when depressed causes linkage 108 to compress in such a manner that the U-shaped key 110 advances distally in barrel portion 92.

An endoscopic member 112 is threadably engageable in port 106 formed in the barrel portion 92. Endoscopic member 112 comprises an elongated tube portion 114 having an axial passageway 116 in which is disposed plunger member 118. A pre-formed treatment pad 120 or a reservoir of medicament is located in the tube 114 distal to the plunger member 118. More particularly, plunger member 118 includes a shaft portion 122 having a circular portion 124 at the proximal end thereof disposed internal of the tube portion 114 and a generally U-shaped key 126 formed at the proximal end thereof disposed external of the tube portion 114. Key 126 on plunger member 118 is engageable with key 110 on linkage 108.

In operation, the endoscopic member 112 may be engaged in the threaded port 106 formed in barrel portion 92 in such a manner so that keys 126 and plunger member 118 are interlocked. Thereupon, trigger 102 may be depressed so as to cause the four bar linkage 108 to compress. At such a time, plunger member 118 is caused to advance proximally in the endoscopic member 112 and force the pre-formed treatment pad 120 from the axial passageway 116 to the intended area of treatment within the abdominal cavity. Thereafter, the portion 124 follows the pre-formed treatment pad 120 out of the proximal end of the endoscopic member 112 and protrudes therefrom. The portion 124 may serve as tamping means. Once extended distally from the endoscopic portion the tamping means may then be manipulated to maneuver the pre-formed treatment pad 120 in a desired position or to manipulate any material delivered from the device.

When the tube portion 114 includes a reservoir of medicament rather than a preformed pad, depressing the trigger 102 advances the plunger member 118 distally to urge a metered quantity of the material from the endoscopic member 112 to the intended site of application.

In an alternate embodiment shown in FIG. 7, the tamping portion of the plunger member 118 may be a frusto-conical shaped portion 128 rather than circular portion 124. Alternatively, portion 124 may be formed with an axial aperture through which medicament stored behind the portion 124 may, upon squeezing the trigger 102, be delivered under pressure.

In an alternative embodiment (not shown) tamping means are disposed in a second passageway formed in the endoscopic portion, and actuating means similar to that described above for delivering material, may be used to deploy the tamping means. The tamping means itself may advantageously be fabricated from an elastic material, such as a synthetic or natural rubber or a shape memory alloy, such as for example the alloys described in U.S. Pat. No. 4,665,906 the disclosure of which is incorporated herein by reference. In a particularly useful embodiment the elastic tamping means is disposed in the second passageway in a deformed state and assumes a substantially undeformed state when deployed out of the passageway to facilitate manipulation of the material just delivered.

Although the invention has been described with reference to preferred embodiments it is apparent that several changes may be made without departing from the spirit and scope of the subject invention.

For example, it may be readily appreciated that the endoscopic portion may be formed integrally with the barrel portion of the device. In this instance the entire device may be disposable. Furthermore, the trigger portion may be disposed substantially parallel to the longitudinal axis of the barrel portion for providing a palm-grip arrangement.

In addition, a separate propellant containment means and medicament containment means may be provided rather than having a combined propellant and medicament cartridge element. In this instance, the barrel portion of the device may be provided with means for supporting and/or interconnecting both cartridges.

Furthermore, it may be readily appreciated that the barrel portion of the device may be formed with an integral reservoir within which medicament is stored for delivery. When the medicament is in a powdered form, it may be propelled from the reservoir by a compressed gas supply stored in the handle portion of the device.

What is claimed is:

1. An endoscopic device for delivering a quantity of material comprising:

a handle portion;

an elongated endoscopic portion having a proximal end extending from said handle portion and a distal end, said endoscopic portion having a passageway extending therethrough configured to emit material only from said distal end;

material containment means disposed within said handle portion for storing at least a particulate material to be delivered and a pressurized propellant for propelling said particulate material from said material containment means, said material containment means including seal means communicating with a proximal end of said passageway for permitting the propulsion of said particulate material therefrom; and

actuation means operably connected to said material containment means for causing said seal means to open and permit a quantity of said particulate material to be propelled from said material containment means, through said passageway, out of said distal end of said endoscopic portion.

2. An endoscopic device as recited in claim 1 wherein said handle portion is dimensioned and configured for housing said actuation means.

3. An endoscopic device as recited in claim 2 wherein port means is formed in said handle portion for operatively receiving said proximal end of said endoscopic portion.

4. An endoscopic device as recited in claim 2 wherein said handle portion comprises a barrel portion defining a longitudinal axis and a grip portion which depends from said barrel portion, said barrel portion configured for housing said material containment means.

5. An endoscopic device as recited in claim 4 wherein said material containment means comprises a cartridge configured for removal from said barrel portion.

6. An endoscopic device as recited in claim 5 wherein said barrel portion further comprises flange means for supporting said removable cartridge.

7. An endoscopic device as recited in claim 5 wherein said cartridge is formed integral with said material containment means.

8. An endoscopic device as recited in claim 5 wherein said material contained within said cartridge is medicament.

9. An endoscopic device as recited in claim 1 wherein said actuation means includes trigger means movably connected to plunger means for urging said plunger means against said material containment means to cause said seal means to permit pressurized propellent to exit therefrom propelling therewith a quantity of particulate material from said material containment means.

10. A device for endoscopic delivery of a material comprising:

a handle portion;

an endoscopic delivery portion extending distally from said handle portion and having a passageway extending therethrough;

material containment means disposed within said handle portion and communicating with said passageway for storing at least a material to be delivered and a pressurized propellant for propelling said material through said endoscopic delivery portion, said material containment means including seal means for permitting the propulsion of said material therefrom; and

pivotal actuating means operatively connected to said material containment means for causing said seal means to open and permit a quantity of said material to be delivered from said material containment means.

11. A device as in claim 10 wherein said endoscopic delivery means comprises an elongated endoscopic portion having opposed proximal and distal ends.

12. A device as in claim 11 wherein said passageway is an axial passageway extending from said proximal to said distal end of said endoscopic portion.

13. A device as in claim 12 wherein said handle portion defines a barrel section for housing said material containment means, said proximal end of said endoscopic portion being connected to said barrel section.

14. A device as in claim 13 further comprising port means defined in said barrel section for operatively receiving said proximal end of said endoscopic portion.

15. A device as in claim 13 wherein said material containment means comprises a cartridge configured for removal from said barrel section.

16. An endoscopic device for delivering a quantity of material comprising:

a handle portion;

an endoscopic portion having opposed proximal and distal ends, said proximal end connected to said handle portion and having a passageway extending therethrough from said proximal end to said distal end thereof;

material containment means disposed within said handle portion for storing at least a material to be delivered under pressure, said material containment means including seal means in communication with a proximal end of said passageway for permitting the propulsion of said material therefrom;

a trigger movably connected to said handle portion; and

a plunger operatively connected to said trigger for urging said plunger distally against said material containment means to cause said seal means to open and permit at least a portion of the material contained therein to be expelled therefrom so as to be delivered out of said distal end of said endoscopic portion.

17. An endoscopic device for delivering a metered quantity of material comprising:

a handle portion having a longitudinally extending barrel portion and having opposed proximal and distal ends;

a port formed in said distal end of said barrel portion;

a trigger movably connected to said handle portion;

an elongated endoscopic member having a proximal end portion engageable in said port and having a passageway extending from said proximal end portion to a distal end thereof;

a removable cartridge disposed in said handle portion and communicating with said passageway, said cartridge containing a pressurized propellent and material for delivery through said passageway in said endoscopic member, said cartridge including a frangible seal member for permitting the pressurized propulsion of said material therefrom; and

plunger means operatively connected to said trigger for urging said cartridge in a distal direction causing said frangible seal member to be pierced and permit a metered quantity of said material to be expelled therefrom and delivered out of said distal end of said endoscopic member.

18. An endoscopic device as in claim 17 further comprising a grip portion depending from said barrel portion and wherein said trigger is movable between a first position spaced from said grip portion and a second position adjacent said grip portion.

* * * * *

B-7

US005415631A

United States Patent [19]

Churinetz et al.

[11] Patent Number: 5,415,631

[45] Date of Patent: May 16, 1995

[54] **ENDOSCOPIC MATERIAL DELIVERY DEVICE**

[75] Inventors: **Robert Churinetz**, West Haven; **Jeffrey S. White**, Ridgefield, both of Conn.

[73] Assignee: **United States Surgical Corporation**, Norwalk, Conn.

[21] Appl. No.: **191,617**

[22] Filed: **Feb. 4, 1994**

Related U.S. Application Data

[62] Division of Ser. No. 863,195, Apr. 3, 1992, Pat. No. 5,312,333.

[51] **Int. Cl.**[6] **A61M 5/00**

[52] **U.S. Cl.** **604/57**; 604/58; 604/140; 604/148

[58] **Field of Search** 604/57–61, 604/64, 140, 141, 143–148

[56] **References Cited**

U.S. PATENT DOCUMENTS

1,642,950	9/1927	Haas .	
2,554,352	5/1951	Ward et al. .	
2,623,519	12/1952	Cohen .	
2,647,512	8/1953	Johnson .	
3,088,207	5/1963	Borsuk .	
3,481,323	12/1969	Cook et al.	604/143
3,561,433	2/1971	Kovach .	
3,744,493	7/1973	Booher et al. .	
3,934,584	1/1976	Corio .	
4,154,239	5/1979	Turley .	
4,237,871	12/1980	Bonnet .	
4,349,028	9/1982	Green .	
4,426,024	1/1984	Hogan et al. .	
4,522,621	6/1985	Cassou .	
4,597,753	7/1986	Turley .	
4,790,819	12/1988	Li et al. .	
4,944,726	7/1990	Hilal et al. .	
4,977,900	12/1990	Fehling et al. .	
5,015,233	5/1991	McGough et al. .	
5,024,656	6/1991	Gasaway et al. .	
5,046,486	9/1991	Grulke et al. .	
5,125,836	6/1992	Dragan et al. .	
5,129,882	7/1992	Weldon et al. .	
5,133,701	7/1992	Han .	
5,176,645	1/1993	Guerrero	604/143
5,200,170	4/1993	McNow .	
5,221,259	6/1993	Weldon et al. .	
5,222,939	6/1993	Tiefenbrun et al. .	
5,224,931	7/1993	Kumar .	
5,312,333	5/1994	Churinetz et al.	604/57

FOREIGN PATENT DOCUMENTS

0081392	6/1983	European Pat. Off. .	
0436353	7/1991	European Pat. Off. .	
1791094	2/1978	Germany	604/141
3909999	3/1989	Germany .	
84117	8/1935	Switzerland .	
26666	of 1902	United Kingdom .	

OTHER PUBLICATIONS

Azziz, et al., "Use of an Oxidized, Regenerated Cellulose Absorbable Adhesion Barrier at Laparoscopy," The Jornal of Reproductive Medicine, vol. 36, No. 7, Jul. 1991, pp. 479–482.

(List continued on next page.)

Primary Examiner—Stephen C. Pellegrino
Assistant Examiner—Nancy Mulcare

[57] **ABSTRACT**

A device for delivering a quantity of material endoscopically to an intended site of application within a body through an incision or entrance wound includes a handle portion with movable trigger means, and an endoscopic portion. A reservoir or cartridge containing material for delivery may be disposed in the handle or endoscopic portion of the delivery device. In operation, the trigger means may be operated in such a manner so as to cause a discharge of a metered quantity of material from the proximal end of the endoscopic tube.

13 Claims, 3 Drawing Sheets

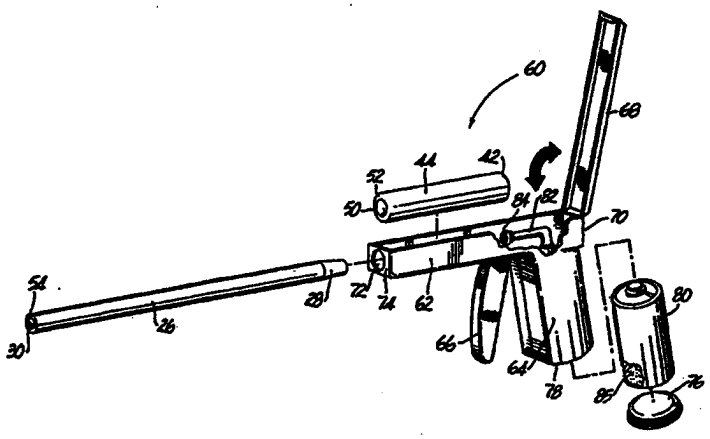

OTHER PUBLICATIONS

Diamond, et al., "A Model For Sidewall Adhesions in the Rabbit: Reduction by an Absorbalbe Barrier," Microsurgery, vol. 8, pp. 197–200, 1987.

Diamond, et al., "Laoparoscopy Application of Interceed (TC7) in the Pig," Journal of Gynecologic Surgery, vol. 5, No. 2, 1989, pp. 145–148.

Linsky, et al., "Adhesion Reduction in the Rabbit Uterine Horn Model Using an Absorbable Barrier, TC–7," The Journal of Reproductive Medicine, vol. 32, No. 1, Jan. 1987, pp. 17–20.

Toy, et al., "Toy–Smoot Laparoscopic Hernioplasty", Surgical Laparoscopy & Endoscopy, vol. 1, No. 3, 1991, pp. 151–155.

"Cellulose Barrier Cuts Adhesion Risk After Infertility Procedures", OBIGYN News, May, 1–14, 1990.

"Interceed *(TC7) Absorbable Adhesion Barrier", OBIGYN News, Nov. 1–14, 1989, vol. 24, No. 21.

"Prevention of Postsurgical Adhesions by Interceed (TC7),* An Absorbable Adhesion Barrier: A Prospective, Randomized Multicenter Clinical Study," Fertility and Sterility, vol. 51, No. 6, Jun. 1989, pp. 933–938.

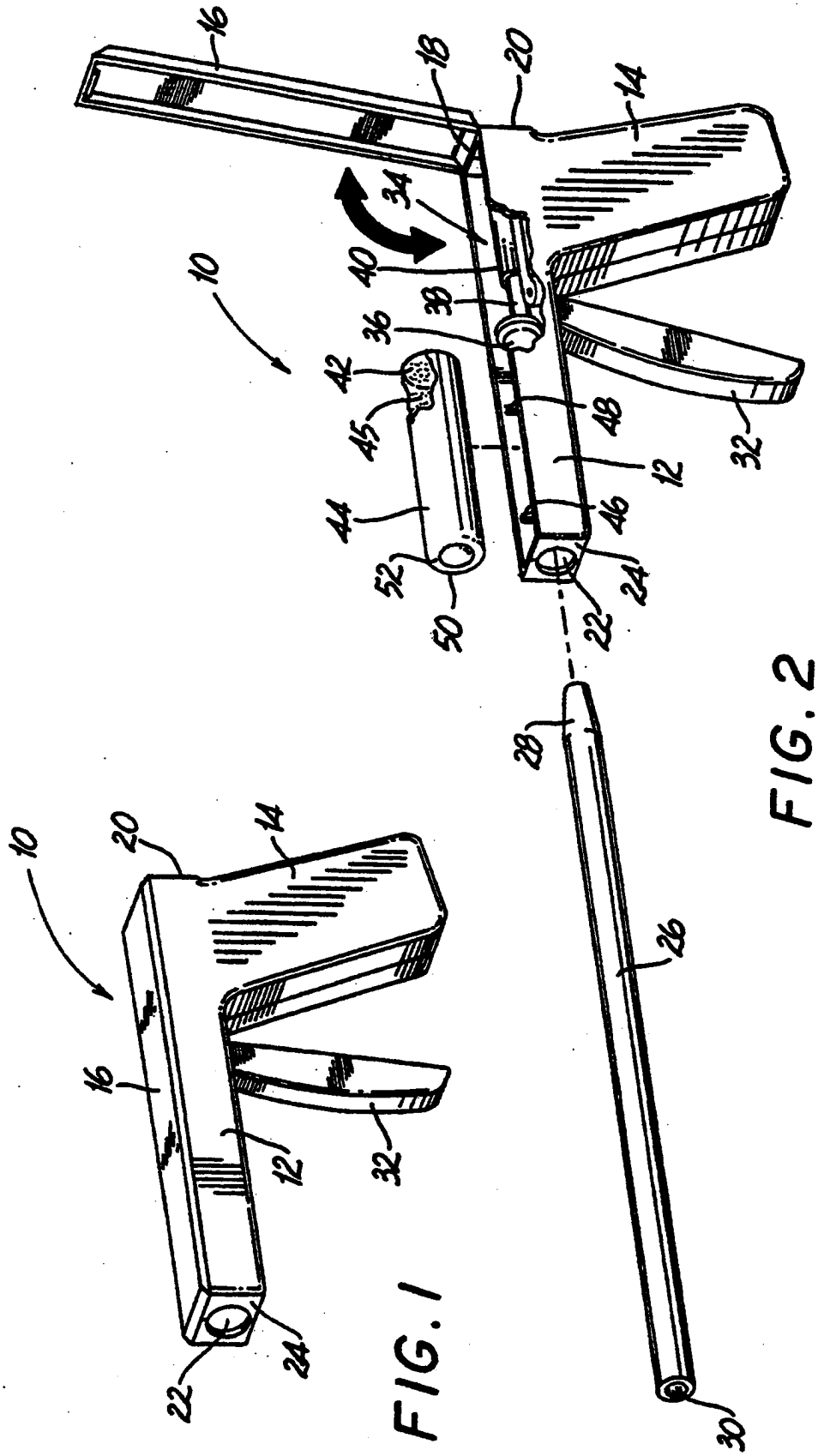
16
18
20
14
34
40
38
36
10
42
45
48
12
32
44
46
52
24
50
22
28
26
30

FIG. 2

10
20
14
16
12
32
22
24

FIG. 1

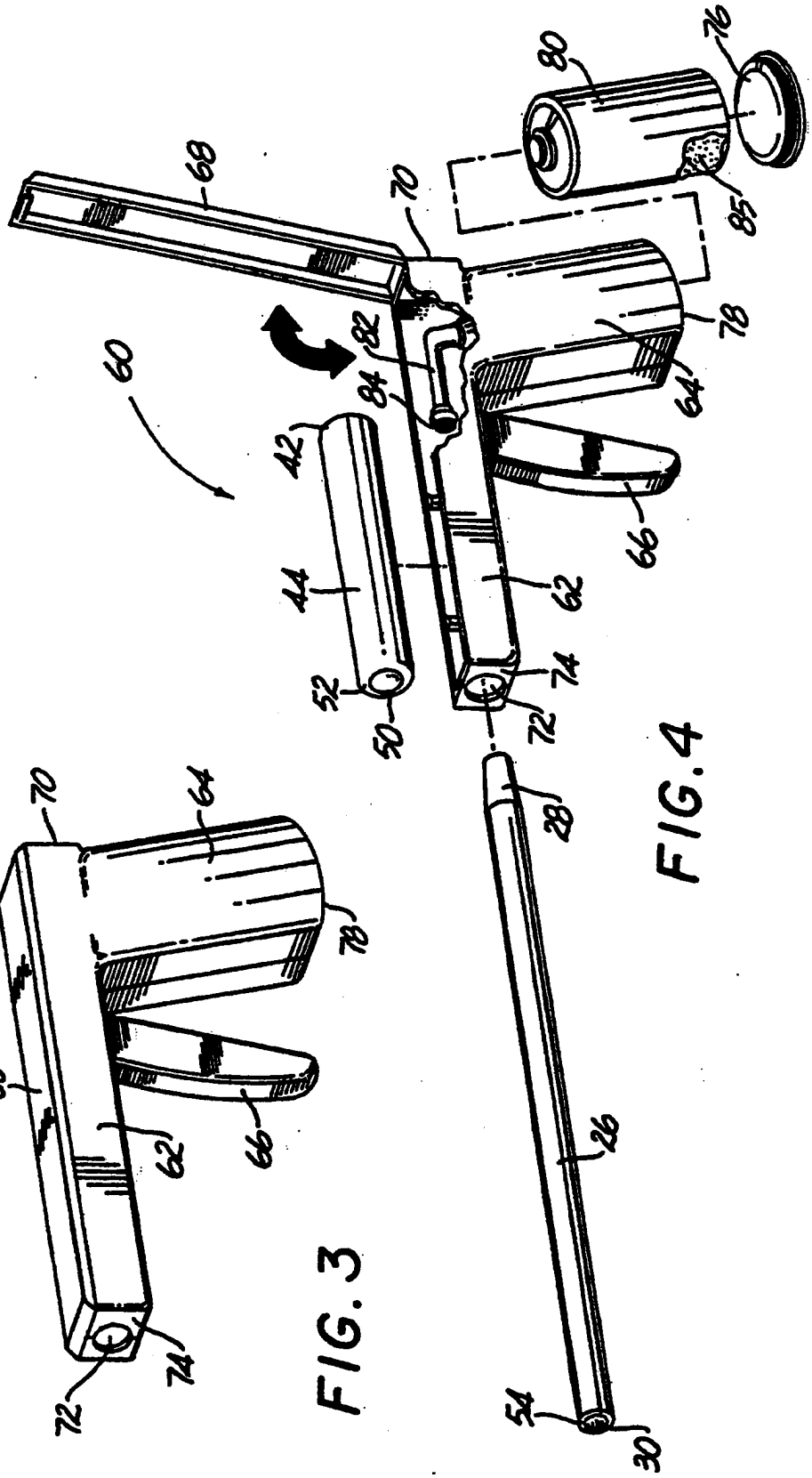
60
68
70
80
76
85
78
82
84
64
42
66
44
62
52
74
50
72
28
26
54
30

FIG. 4

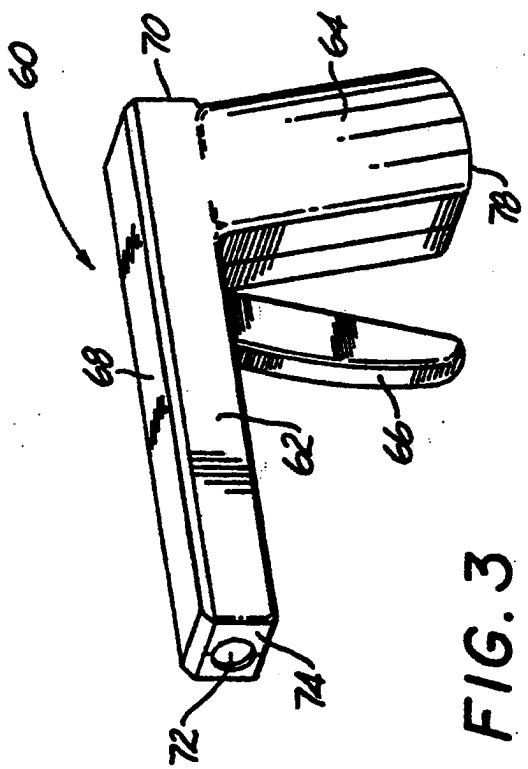
60
70
64
78
68
62
66
72
74

FIG. 3

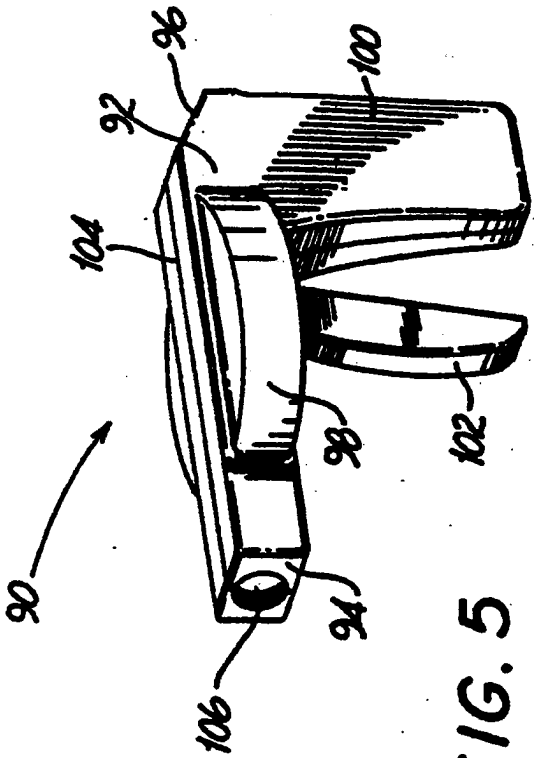

FIG. 5

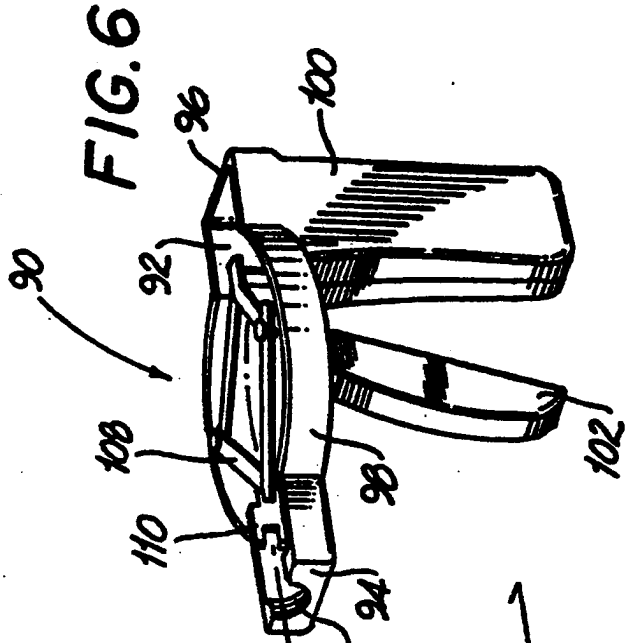

FIG. 6

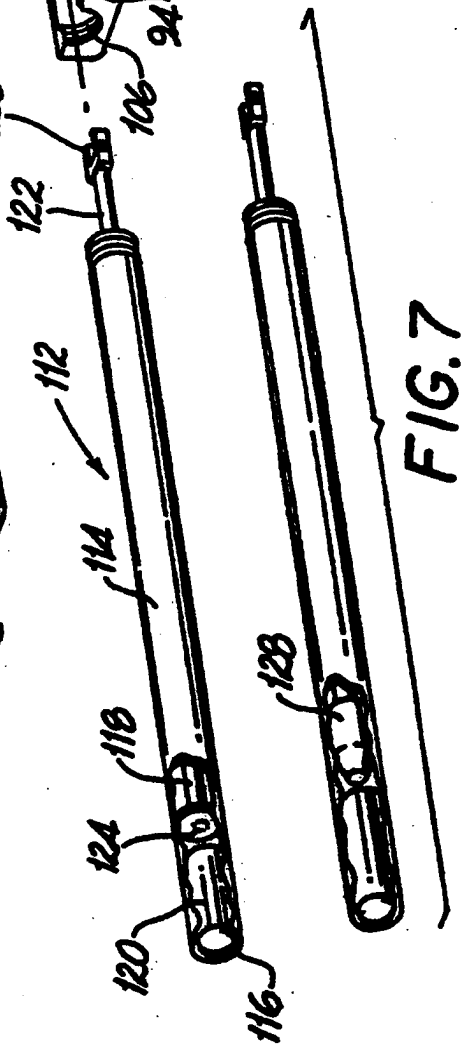

FIG. 7

ENDOSCOPIC MATERIAL DELIVERY DEVICE

This is a divisional of application Ser. No. 07/863,195 filed Apr. 3, 1992, now U.S. Pat. No. 5,312,333.

BACKGROUND OF THE INVENTION

1. Field of the Invention

This invention relates to a device for delivering material to a remote location and more particularly, to an instrument for endoscopic delivery of a quantity of medicament or material to a remote location within the body.

2. Description of the Related Art

In laparoscopic procedures, surgery is performed through a small incision or entrance wound in the skin with the abdominal cavity expanded by gas insufflation. Laparoscopic procedures generally require that any instrumentation inserted into the body be sealed so that gases do not enter or exit the body through the incision. Further, laparoscopic procedures often require the surgeon to operate on organs or tissues which are far removed from the incision, thereby requiring that any instruments to be used in such procedures be both elongated and narrow.

In open surgery, hemostasis is achieved by using agents such as collagen and cellulose in either a preformed pad or a loose powdered form. These hemostatic agents are applied to sites of hemorrhage or bleeding intraoperatively and, due to their thromboplastic nature, cause cessation or reduction of bleeding. A hemostatic collagen paste which may be used in this manner is disclosed in U.S. Pat. No. 4,891,359 to Saferstein et al. These materials are easily applied by hand during open surgery because the site of intended application is readily accessible.

The use of hemostatic agents and other medicaments in laparoscopic surgery poses unique problems due to the limited access to the site of application and the difficulty of passing material to the site via a cannula or trocar. During laparoscopic procedures, materials, such as adhesion barriers, have been delivered to an intended site of application by grasping the material with a micrograsper or other similar instrument, and extending the instrument through a cannula placed in an incision or entrance wound. However, it would be difficult to repetitively deliver a metered quantity of fluid or powdered material in such a manner. Once the material has been introduced into the abdominal cavity, post-insertion manipulation of the material is also extremely difficult.

In addition, because of the difficulty and expense of cleaning and sterilizing surgical instruments between uses, there is an increasing demand for instruments which are disposable after use in a single surgical procedure rather than permanent and reusable. Additionally, instrumentation which requires the use of external power supplies is less efficient for clinical applications.

SUMMARY OF THE INVENTION

An endoscopic device is disclosed for delivering a quantity of material to an organ or tissue area within a body. The device includes an endoscopic portion having a passageway formed therein, material containment means communicating with said passageway and actuating means for causing the delivery of a quantity of material from the material containment means. The device may further include separate propellant containment means for dispensing powder or particulate medicaments. Alternatively, the material containment means may also contain a propellant. The material containment means may comprise a reservoir integrally formed in the endoscopic portion or in a handle portion. Preferably, the containment means comprises a removable cartridge.

The actuating means may be pivotal and may include a trigger. A plunger means operatively connected to the trigger may also be included for advancing distally against the containment means in such a manner as to cause a predetermined quantity of medicament to be expelled from the containment means such as, for example by a propellant.

In another aspect the present invention, the material for delivery to the intended site of application is disposed in the axial passageway of the endoscopic portion of the delivery device. In this instance, the material may comprise a preformed hemostatic treatment pad or in the alternative the material may comprise a fluid or powdered medicament. Actuating means are operatively connected to the endoscopic portion for causing a predetermined quantity of the material to be delivered from the endoscopic portion.

In yet another aspect of the present invention, the delivery device is provided with tamping means for manipulating the material delivered.

Further features of the invention will become more apparent from the accompanying drawings and the following detailed description of the invention.

BRIEF DESCRIPTION OF THE DRAWINGS

Preferred embodiments of the invention will be described hereinbelow with reference to the drawings. In the drawings and the description which follows, "proximal" means the end closest to the operator and "distal" means the end farthest from the operator.

FIG. 1 is a perspective view of the handle portion of an endoscopic material delivery device of the subject invention;

FIG. 2 is a perspective view, with parts broken away, of a loaded endoscopic material delivery device;

FIG. 3 is a perspective view of an alternate embodiment of the handle portion of an endoscopic material delivery device of the subject invention;

FIG. 4 is a perspective view, with parts broken way, of a loaded endoscopic material delivery device;

FIG. 5 is a perspective view of a third embodiment of the handle portion of the endoscopic material delivery device of the subject invention;

FIG. 6 is a perspective view, with portions removed, of a loaded endoscopic material delivery device; and

FIG. 7 is a perspective view in partial cutaway of an alternative cartridge means adapted for use in the device of FIG. 6.

DETAILED DESCRIPTION OF THE PREFERRED EMBODIMENTS

A preferred embodiment of the endoscopic material delivery device of the subject invention is illustrated in FIGS. 1 and 2 and is designated generally by reference numeral 10. The delivery device 10 includes a pistol-like handle portion having a longitudinal barrel portion 12 with a grip portion 14 depending transversely from the barrel portion 12. Portion 14 may be generally rectangular in cross-section as shown or may have any configuration which may be easily and comfortably gripped

during operations. Barrel portion 12 includes a cover 16 which is attached thereto by an integral hinge 18 located at the proximal end 20 of the barrel portion 12. A port 22 is formed in the distal end 24 of barrel portion 12 for receiving an elongated disposable endoscopic shaft 26. More particularly, a tapered proximal end 28 of endoscopic shaft 26 may be inserted through the port 22 formed in barrel portion 12 so as to be frictionally or mechanically engaged therein for operations. The endoscopic shaft 26 is formed with an axial passageway 30 through which a metered quantity of material may be delivered to the intended site of application, for example, within the abdominal cavity.

The delivery device 10 further includes a movable trigger 32 which depends transversely from barrel portion 12 adjacent portion 14. In particular, trigger 32 is mechanically linked to a piston mechanism 34 disposed in the barrel portion 12. Piston mechanism 34 includes a circular plunger 36 depending from a shaft 38 which is slidably maintained in a sleeve 40. The trigger 32 is operative to cause shaft 38 to slide within sleeve 40 so that plunger 36 may be moved into contact with the rear end 42 of containment means 44, here shown as a replaceable cylindrical containment cartridge. It should be understood that the containment means 44 may alternatively be a reservoir integrally formed within the barrel 12.

Cartridge 44 which may contain a propellent 45 and/or a powdered or fluid medicament, is maintained in barrel portion 12 on a pair of spaced apart support flanges 46 and 48 disposed adjacent the distal end 24 of barrel portion 12. Furthermore, cartridge 44 may be formed with a penetrable membrane 50 disposed at the front end 52 thereof. The membrane 50 is easily pierced by the tapered end 28 of the endoscopic shaft 26 which extends through the port 22 as the cartridge 44 is urged in a distal direction by the plunger 36.

While described in terms of delivering a medicament, the device of the present invention can be used to deliver a wide variety of fluid, powdered or solid materials. Such materials include, but are not limited to pharmaceuticals, materials having anti-adhesion properties, anti-coagulants, growth factors, osteogenic factors, antibiotics, anti-fungals, immunosuppressive agents, anti-inflammatory agents, irrigating fluids, disinfectants, preservatives, diagnostic agents (dyes, etc.) antihistamines, hormones, enzymes, peptides and/or steroids. Solid materials which may be delivered include woven materials, gels, capsules, molded materials and any other solid form which fits within or may be made to fit within the endoscopic portion of the device.

In operation, a cartridge 44 is placed in support flanges 46 and 48 in the barrel portion 12 of the delivery device 10 and the cover 16 is closed. Thereupon, the endoscopic shaft 26 is inserted into port 22 at end 24 of barrel portion 12. At such a time, the tapered end 28 of endoscopic shaft 26 is disposed proximate the membrane 50 at the front end 52 of cartridge 44. Thereafter, the end 54 of endoscopic shaft 26 is inserted through a cannula (not shown) previously inserted in an incision or entrance wound. When trigger 32 is depressed, the piston mechanism 34 slides forward and plunger 36 is urged against the rear end 42 of cartridge 44 driving the cartridge distal membrane 50 is pierced by the tapered end 28 of endoscopic portion 26, causing the propellent therein to propel a metered quantity of medicament through the passageway 30 in endoscopic shaft 26 to be delivered into the abdominal cavity.

When cartridge 44 contains a fluid medicament, a first squeeze of the trigger 32 will cause plunger 36 to contact the rear end 42 of cartridge 44. Upon release of the trigger spring means (not shown) urge the trigger back to its original position. Subsequent squeezes of the trigger 32 will move the plunger 36 a predetermined distance into cartridge 44, thus forcing a metered amount of medicament out of cartridge 44 and into the endoscopic portion of the instrument. If the fluid medicament has a high viscosity, a series of squeezes may be required to prime the instrument before the metered amount of medicament is delivered out the distal end of the endoscopic portion.

In a variation of this embodiment, the passageway 30 of endoscopic portion 26 serves as the containment means and is pre-loaded with the medicament to be delivered. Actuating means may directly cause the material to be expelled from the endoscopic portion or, as shown in the figures, the actuating means may act upon container 44 which contains a non-toxic, inert delivery substance which merely acts to force a metered quantity of the medicament out of the endoscopic portion. That is, as plunger 36 advances within cartridge 44, a metered amount of the delivery substance is forced out of cartridge 44 and into endoscopic portion 26, which in turn forces a metered quantity of the medicament out of the distal end of passageway 30. A series of endoscopic portions each loaded with a different medicament may be provided in a kit thus allowing the same handle portion to deliver each medicament as needed without mixing or contamination of the individual medicaments.

Referring to FIGS. 3 and 4, another embodiment of the endoscopic material delivery device of the subject invention is illustrated and is designated generally by reference numeral 60. Delivery device 60 includes a handle portion having a longitudinal barrel portion 62 and a hollow grip portion 64 having a generally circular cross-section projecting transversely from barrel portion 62. A movable trigger 66 depends transversely from barrel portion 62 adjacent portion 64. Barrel portion 64 includes a cover 68 integrally attached at the proximal end 70 thereof and a port 72 formed in the proximal end 74 thereof for receiving the tapered end 28 of an endoscopic shaft 26. As stated previously, the tapered end 28 of the endoscopic shaft 26 is provided for piercing the penetrable membrane 50 at the front end of cartridge 44. The delivery device 60 is further provided with a cap member 76 which is threadably engaged in the bottom 78 of handle portion 64 and which may be readily removed to insert a canister of compressed gas 80.

Trigger 66 is mechanically linked to the canister of compressed gas 80 in a known manner known, such as that described in U.S. Pat. No. 4,349,028, the entire disclosure of which is incorporated herein by reference. In addition, a conduit element 82 in barrel portion 62 is connected to the compressed gas canister 80. Conduit element 82 conducts compressed gas from the canister 80, through nozzle 84, to the rear end 42 of replaceable cartridge 44 which preferably contains a medicament in a powdered form.

In operation, the trigger 66 may be depressed in such a manner as to cause compressed gas to exit canister 80. Thereupon, compressed gas from canister 80 is conducted through conduit element 82 in such a manner as to exert a force upon the rear end 42 of cartridge 44 developing pressure within the cartridge and, thereby causing a metered quantity of medicament to be deliv-

ered from cartridge 44 through the endoscopic shaft 26 to the intended site of application.

FIGS. 5 and 6 depict another embodiment of the endoscopic material delivery device of the subject invention designated generally by reference numeral 90. The delivery device 90 includes a longitudinal barrel portion 92 having a proximal end 94, a distal end 96 and a substantially circular midsection 98. A grip portion 100 and a trigger 102 project transversely from barrel portion 92. Barrel portion 92 is provided with a cover member 104 and a threaded port 106 formed in the proximal end 94 thereof. A four bar linkage 108 is operatively disposed in the circular midsection 98 of barrel portion 92. Linkage 108 includes a generally U-shaped key 110 arranged adjacent the proximal end 94 of barrel portion 92. Linkage 108 is operably connected to trigger 102 which when depressed causes linkage 108 to compress in such a manner that the U-shaped key 110 advances distally in barrel portion 92.

An endoscopic member 112 is threadably engageable in port 106 formed in the barrel portion 92. Endoscopic member 112 comprises an elongated tube portion 114 having an axial passageway 116 in which is disposed plunger member 118. A pre-formed treatment pad 120 or a reservoir of medicament is located in the tube 114 distal to the plunger member 118. More particularly, plunger member 118 includes a shaft portion 122 having a circular portion 124 at the proximal end thereof disposed internal of the tube portion 114 and a generally U-shaped key 126 formed at the proximal end thereof disposed external of the tube portion 114. Key 126 on plunger member 118 is engageable with key 110 on linkage 108.

In operation, the encloseopic member 112 may be engaged in the threaded port 106 formed in barrel portion 92 in such a manner so that keys 126 and plunger member 118 are interlocked. Thereupon, trigger 102 may be depressed so as to cause the four bar linkage 108 to compress. At such a time, plunger member 118 is caused to advance proximally in the encloseopic member 112 and force the preformed treatment pad 120 from the axial passageway 116 to the intended area of treatment within the abdominal cavity. Thereafter, the portion 124 follows the preformed treatment pad 120 out of the proximal end of the endoscopic member 112 and protrudes therefrom. The portion 124 may serve as tamping means. Once extended distally from the encloseopic portion the tamping means may then be manipulated to maneuver the pre-formed treatment pad 120 in a desired position or to manipulate any material delivered from the device.

When the tube portion 114 includes a reservoir of medicament rather than a preformed pad, depressing the trigger 102 advances the plunger member 118 distally to urge a metered quantity of the material from the encloseopic member 112 to the intended site of application.

In an alternate embodiment shown in FIG. 7, the tamping portion of the plunger member 118 may be a frusto-conical shaped portion 128 rather than circular portion 124. Alternatively, portion 124 may be formed with an axial aperture through which medicament stored behind the portion 124 may, upon squeezing the trigger 102, be delivered under pressure.

In an alternative embodiment (not shown) tamping means are disposed in a second passageway formed in the endoscopic portion, and actuating means similar to that described above for delivering material, may be used to deploy the tamping means. The tamping means itself may advantageously be fabricated from an elastic material, such as a synthetic or natural rubber or a shape memory alloy, such as for example the alloys described in U.S. Pat. No. 4,665,906 the disclosure of which is incorporated herein by reference. In a particularly useful embodiment the elastic tamping means is disposed in the second passageway in a deformed state and assumes a substantially undeformed state when deployed out of the passageway to facilitate manipulation of the material just delivered.

Although the invention has been described with reference to preferred embodiments it is apparent that several changes may be made without departing from the spirit and scope of the subject invention.

For example, it may be readily appreciated that the endoscopic portion may be formed integrally with the barrel portion of the device. In this instance the entire device may be disposable. Furthermore, the trigger portion may be disposed substantially parallel to the longitudinal axis of the barrel portion for providing a palm-grip arrangement.

In addition, a separate propellant containment means and medicament containment means may be provided rather than having a combined propellant and medicament cartridge element. In this instance, the barrel portion of the device may be provided with means for supporting and/or interconnecting both cartridges.

Furthermore, it may be readily appreciated that the barrel portion of the device may be formed with an integral reservoir within which medicament is stored for delivery. When the medicament is in a powdered form, it may be propelled from the reservoir by a compressed gas supply stored in the handle portion of the device.

What is claimed is:

1. An endoscopic device for device for delivering a metered quantity of material to a surgical site comprizing:

a handle including a longitudinally extending barrel section having a reception port formed in a distal end thereof:

an elongated endoscopic portion configured to be engaged in said reception port and having a passageway extending therethrough;

a removable cartridge disposed in said barrel section of said handle portion and containing material for delivery through said passageway, said cartridge having a piercable seal at a distal end thereof;

a canister of compressed gas disposed in said handle portion;

actuation means for selectively discharging compressed gas from said canister;

conduit means disposed in said handle portion and extending from said compressed gas source to said cartridge for conducting compressed gas from said canister to said cartridge; and

means associated with a proximal end portion of said endoscopic portion for piercing said seal when said endoscopic portion is engaged in said reception port of said barrel section.

2. A device for delivering a quantity of material to a surgical site during an endoscopic procedure comprising:

a handle portion including an elongated barrel section having a reception port formed in a distal end thereof;

an elongated endoscopic portion having seal piercing means provided at a proximal end portion thereof engageable in said reception port and having a passageway extending therethrough;

material containment means disposed within said barrel section of said handle portion for storing a quantity of material for delivery through said passageway, said material containment means having a piercable seal associated with a distal end thereof;

propellant containment means disposed within said handle portion and operatively associated with said material containment means for storing a propellant for propelling a quantity of material from said material containment means; and

actuation means operatively associated with said propellant containment means for selectively discharging propellant therefrom, whereby said seal is pierced by said seal piercing means when said proximal end portion of said endoscopic portion is engaged in said reception port.

3. A device as recited in claim 2, further comprising a conduit extending between said propellant containment means and said material containment means for facilitating communication therebetween.

4. A device as recited in claim 2, wherein said material containment means is configured as a removable and replaceable unit.

5. A device as recited in claim 2, wherein said propellant containment means is configured as a removable and replaceable unit.

6. A device as recited in claim 2, wherein propellant discharged from said propellant containment means imparts a force upon a proximal end of said material containment means to increase pressure therein and cause a quantity of material to be expelled therefrom.

7. A device as recited in claim 2, wherein access panel is associated with said barrel section of said handle portion for accessing said material containment means.

8. A device for delivering a quantity of material to a surgical site during an endoscopic procedure comprising:

a handle portion including an elongated barrel section having a reception port formed in a distal end thereof;

an elongated endoscopic portion having a tapered proximal end portion engagable in said reception port and having a passageway extending therethrough;

a material containment vessel disposed within said barrel section of said handle portion for storing a quantity of material for delivery through said passageway, said material containment vessel having a piercable seal associated with a distal end thereof;

a propellant containment vessel disposed within said handle portion and operatively associated with said material containment vessel for storing a propellant for propelling a quantity of material from said material containment vessel; and

an actuation mechanism operatively associated with said propellant containment vessel for selectively discharging propellant therefrom, whereby said seal is pierced by said tapered proximal end portion when said proximal end portion of said endoscopic portion is engaged in said reception port.

9. A device as recited in claim 8, further comprising a conduit extending between said propellant containment vessel and said material containment vessel for facilitating communication therebetween.

10. A device as recited in claim 8, wherein said material containment vessel is configured as a removable and replaceable unit.

11. A device as recited in claim 8, wherein said propellant containment vessel is configured as a removable and replaceable unit.

12. A device as recited in claim 8, wherein propellant discharged from said propellant containment vessel imparts a force upon a proximal end of said material containment vessel to increase pressure therein and cause a quantity of material to be expelled therefrom.

13. A device as recited in claim 8, wherein an access panel is associated with said barrel section is associated with said handle portion for accessing said material containment vessel.

* * * * *

B-8

US005741261A

United States Patent [19]

Moskovitz et al.

[11] Patent Number: 5,741,261

[45] Date of Patent: Apr. 21, 1998

[54] **MINIMALLY INVASIVE SPINAL SURGICAL METHODS AND INSTRUMENTS**

[75] Inventors: **Peter A. Moskovitz**, Washington, D.C.; **Scott Boden**, Atlanta, Ga.; **William F. McKay**; **Joseph Moctezuma**, both of Memphis, Tenn.

[73] Assignee: **SDGI Holdings, Inc.**, Memphis, Tenn.

[21] Appl. No.: **670,351**

[22] Filed: **Jun. 25, 1996**

[51] **Int. Cl.**[6] **A61B 17/56**

[52] **U.S. Cl.** **606/79**; 606/61; 606/86

[58] **Field of Search** 606/53, 60, 61, 606/79, 80, 81, 82, 83, 84, 85, 86

[56] **References Cited**

U.S. PATENT DOCUMENTS

3,964,480	6/1976	Froning .	
4,545,374	10/1985	Jacobson .	
4,573,448	3/1986	Kambin .	
5,158,543	10/1992	Lazarus .	
5,171,279	12/1992	Mathews .	
5,195,541	3/1993	Obenchain .	
5,201,729	4/1993	Hertzmann et al. .	
5,242,444	9/1993	MacMillan	606/61
5,357,983	10/1994	Mathews .	
5,395,317	3/1995	Kambin .	
5,439,464	8/1995	Shapiro .	
5,445,639	8/1995	Kuslich et al.	606/79
5,489,307	2/1996	Kuslich et al.	606/61

OTHER PUBLICATIONS

Laparoscopic Bone Dowel Instruments, Sofamor Danek, The Spine Specialist, 1995.

Laparoscopic Bone Dowel Surgical Technique, Sofamor Danek, The Spine Specialist, 1995.

Micro–Endo Systems . . . Creating the Future of Spinal Endoscopy, Sofamor Danek, The Spine Specialist, 1994.

Spinal Endoscopy Evolution, Application & Fundations, Hallett H. Mathews, M.D. Department of Orthopaedic Surgery, Medical College of Virginia, pp. 1–44.

Posterolateral Fusion of Lumbosacral Spine, George Truchly and Walter A.L. Thompson, New York, N.Y., pp. 505–511.

The Technique of the Bilateral–Lateral Lumbar Spine Fusion, Surgical Procedures, Hugo A. Keim, Chapter 26, pp. 250–264.

Posterior Intertransverse Fusion: Indications, Pathomechanics, and Results, Surgical Procedures, Ronald J. Wisneski and Richard H. Rothman, Chapter 27, pp. 265–278.

American Academy of Orthopedic Surgeons 1996 Annual Meeting–Scientific Program.

Primary Examiner—Michael Buiz

Assistant Examiner—Daphna Shai

Attorney, Agent, or Firm—Woodard, Emhardt, Naughton Moriarty & McNett

[57] **ABSTRACT**

Minimally invasive spinal surgical techniques and tools are provided. The methods include separating the iliocostalis lumborum muscle from the anterior leaf of the thoracolumbar fascia to create a channel from the patient's skin to the intertransverse interval. In one embodiment, the method also includes delivering graft material through the channel to the intertransverse interval. A device according to one aspect of the present invention includes a retraction portion having a flattened plate configured to atraumatically retract tissue to create a working space within an endosurgical site and a curved shaft attached to the retraction portion. The shaft includes a bend having a radius of preferably 160 degrees. A gripping portion is attached to the shaft and is configured for manually gripping and manipulating the device.

19 Claims, 20 Drawing Sheets

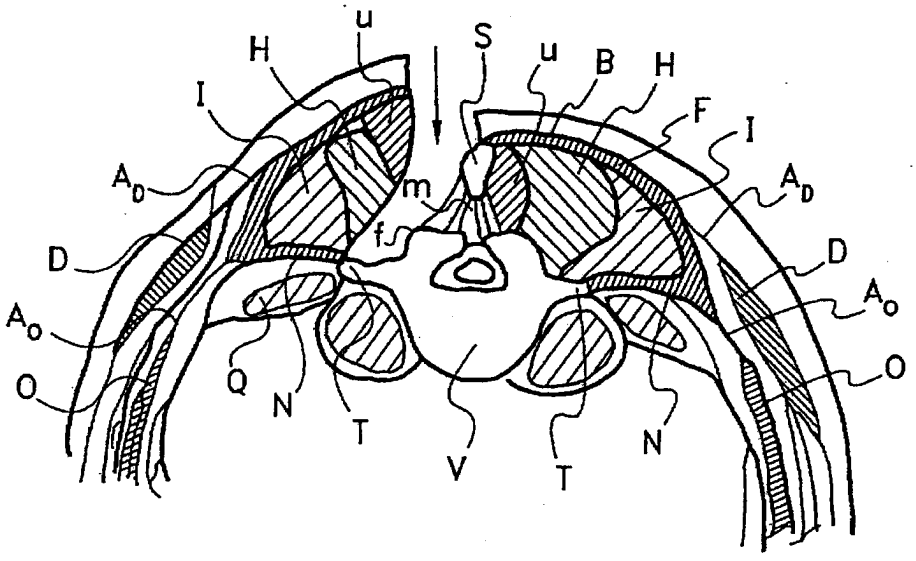

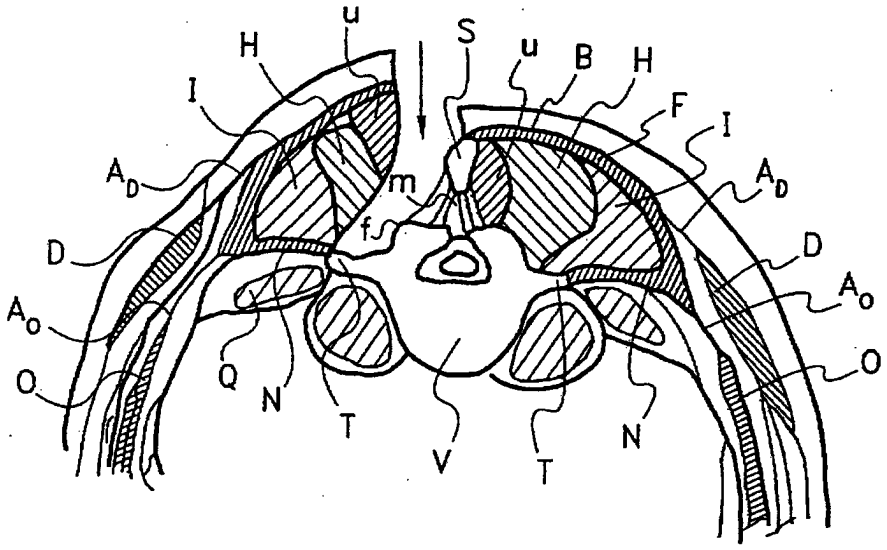
u
H
S
u
B
H
I
F
I
A_D
m
A_D
f
D
D
A_O
A_O
O
O
Q
N
T
V
T
N

Fig. 1

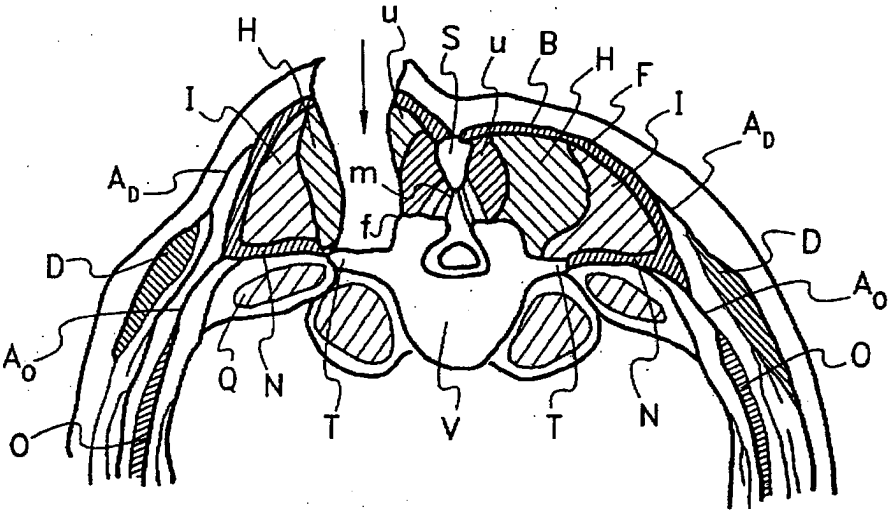
u
H
S
u
B
H
F
I
I
A_D
m
A_D
f
D
D
A_O
A_O
O
O
Q
N
T
V
T
N

Fig. 2

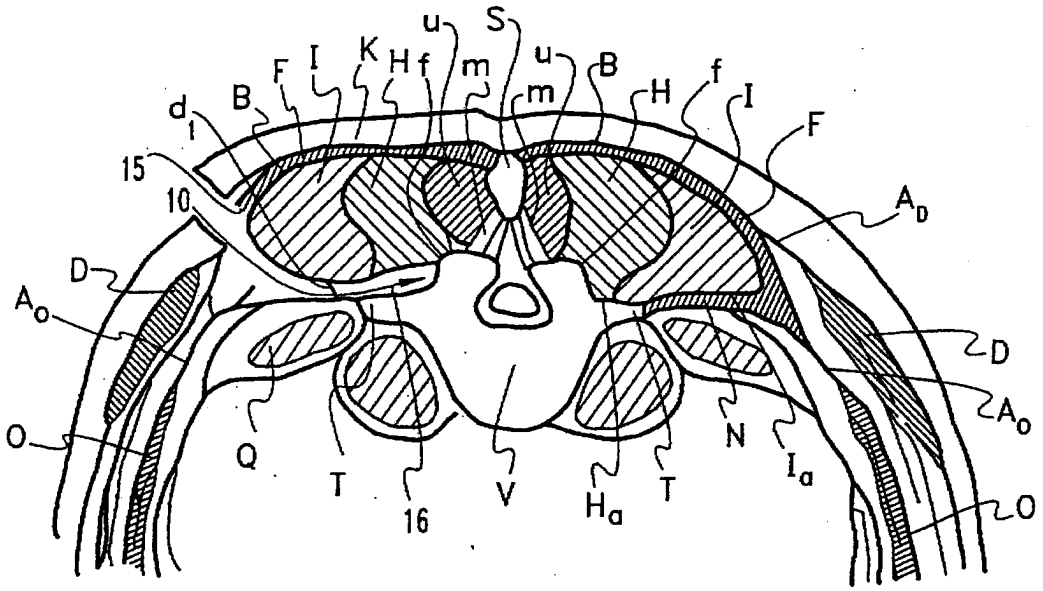

Fig. 3

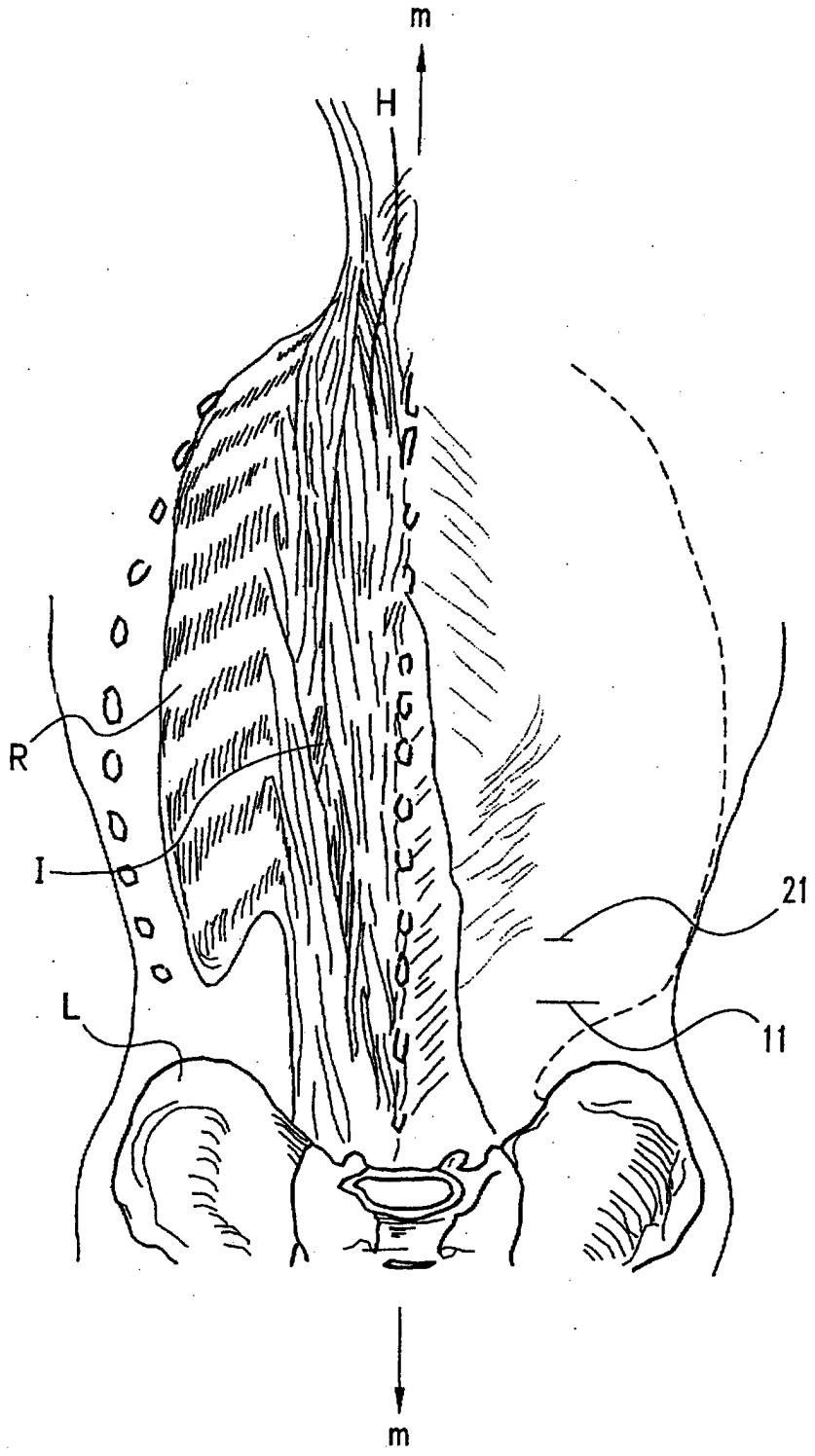

Fig. 4

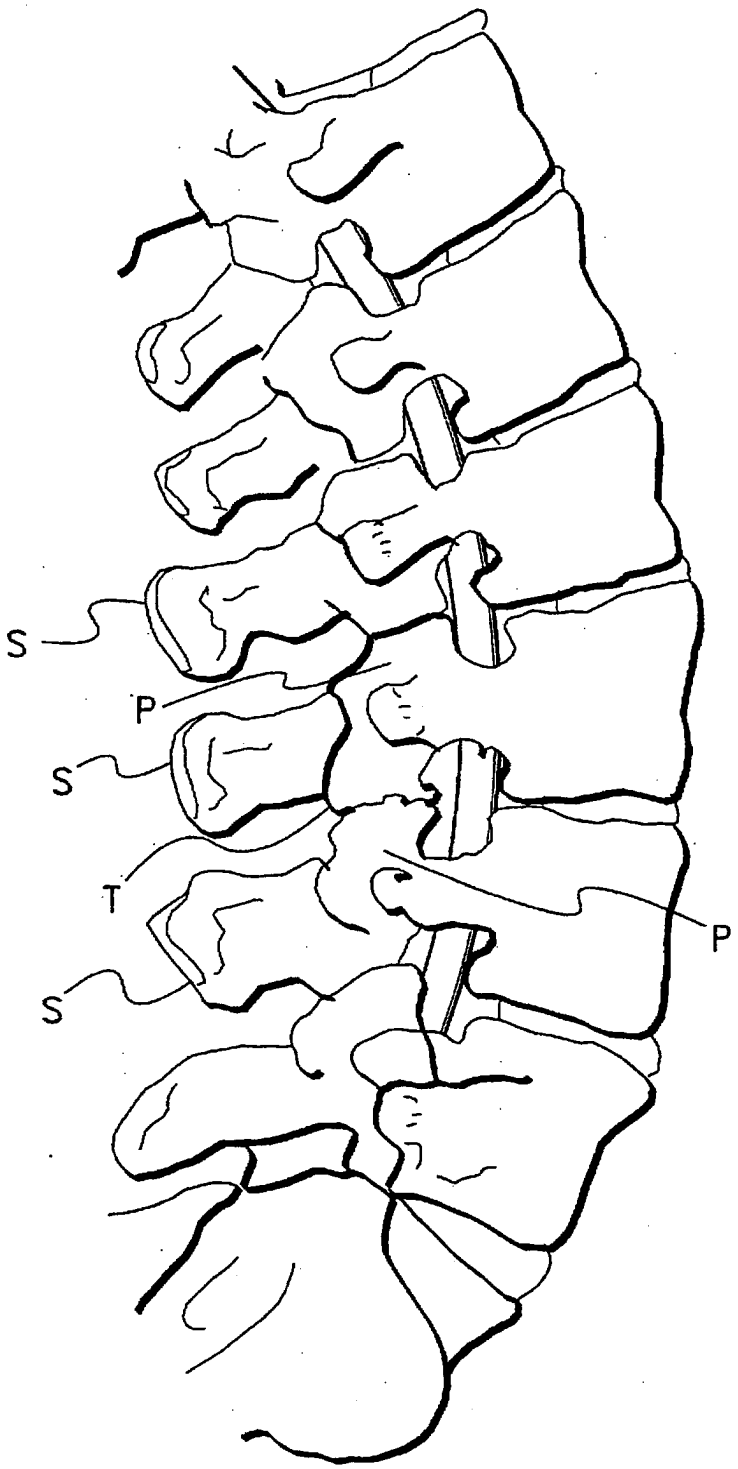

Fig. 5

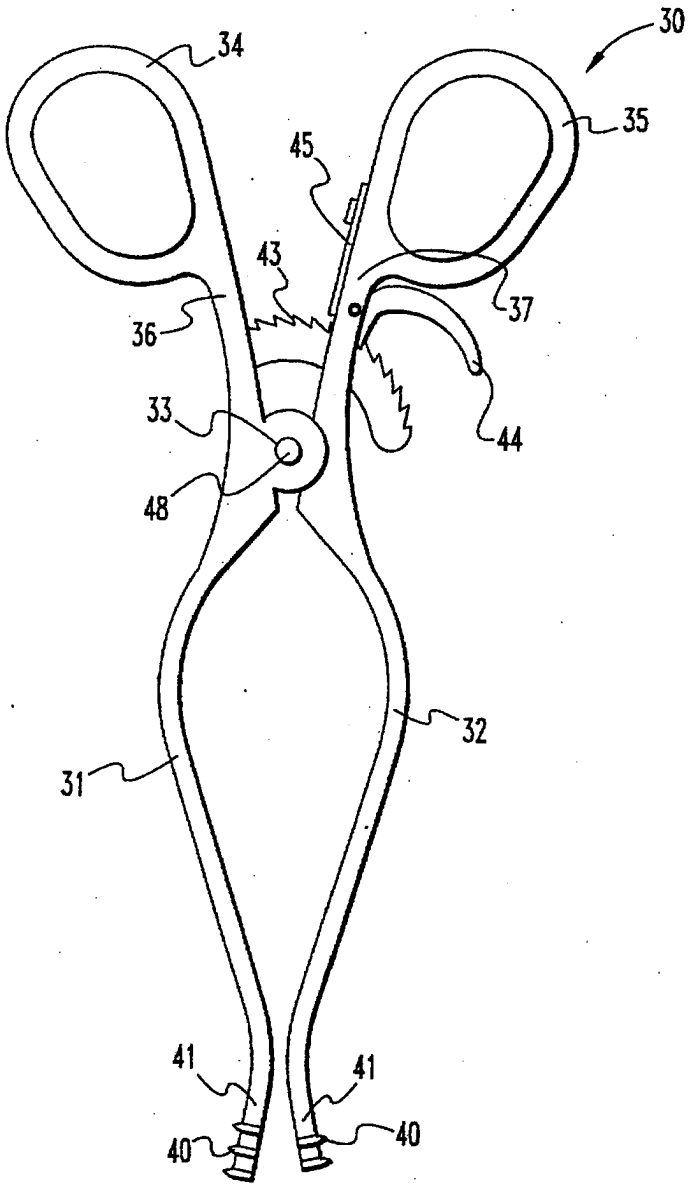

Fig. 6



Fig. 7

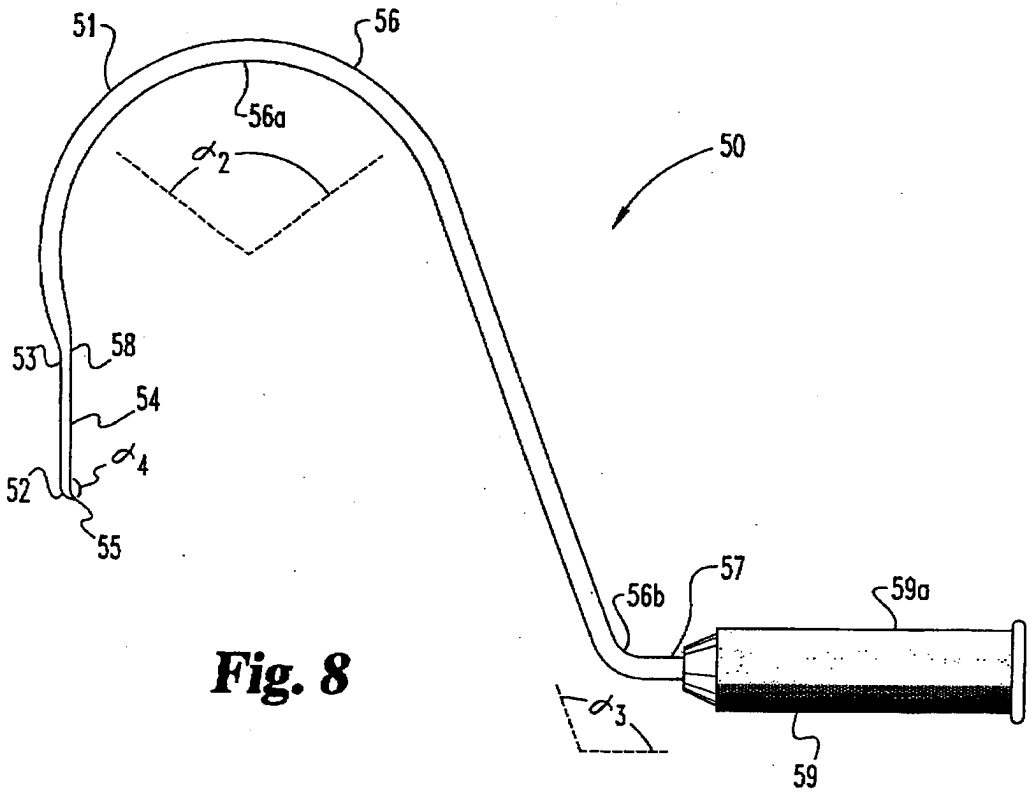
51
56
56a
α_2
50
53
58
54
α_4
52
55
56b
57
59a
α_3
59

Fig. 8

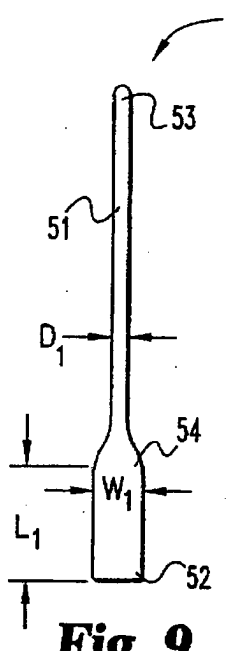
50
53
51
D_1
54
W_1
L_1
52

Fig. 9

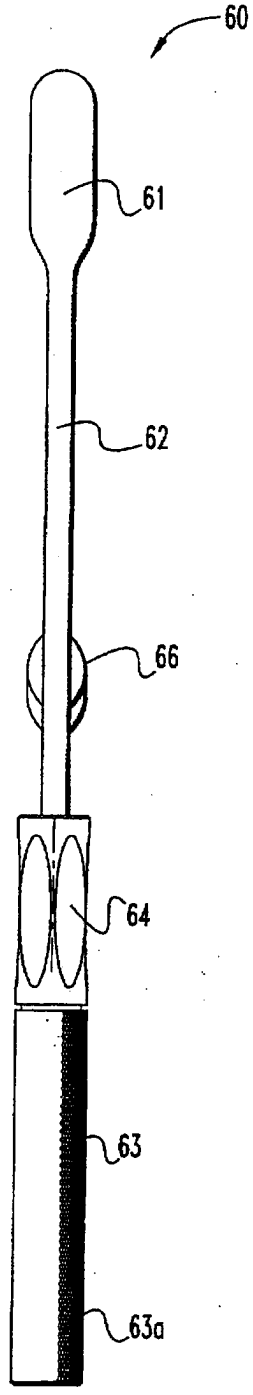

Fig. 10

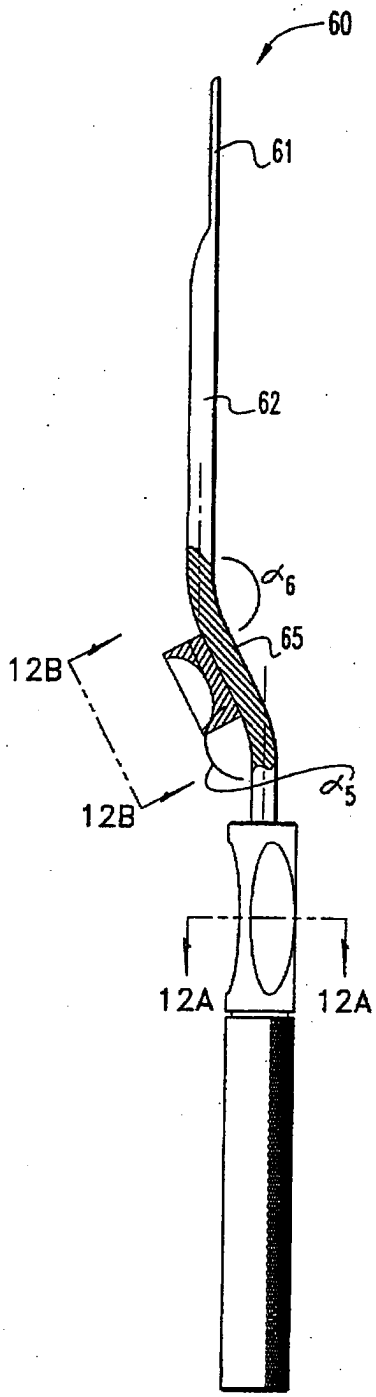

Fig. 11

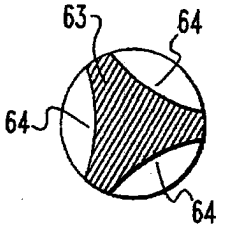

Fig. 12a

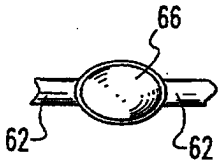

Fig. 12b

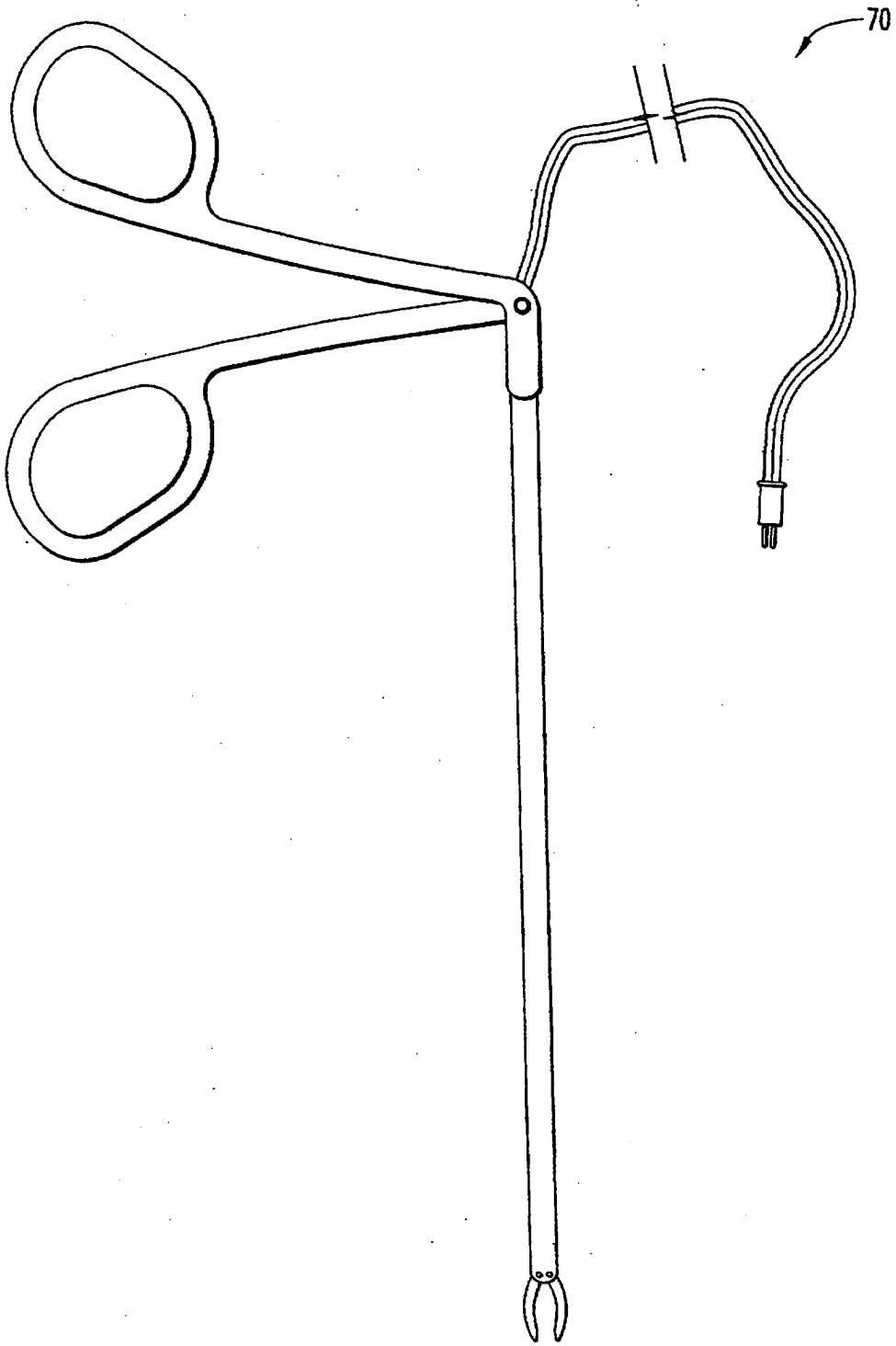

Fig. 13

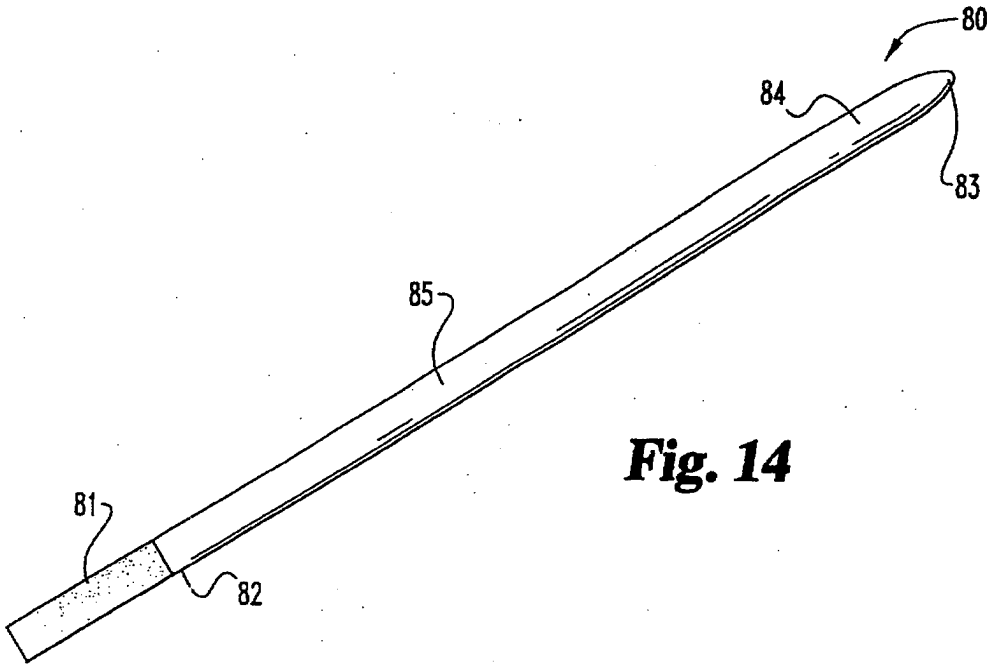

Fig. 14

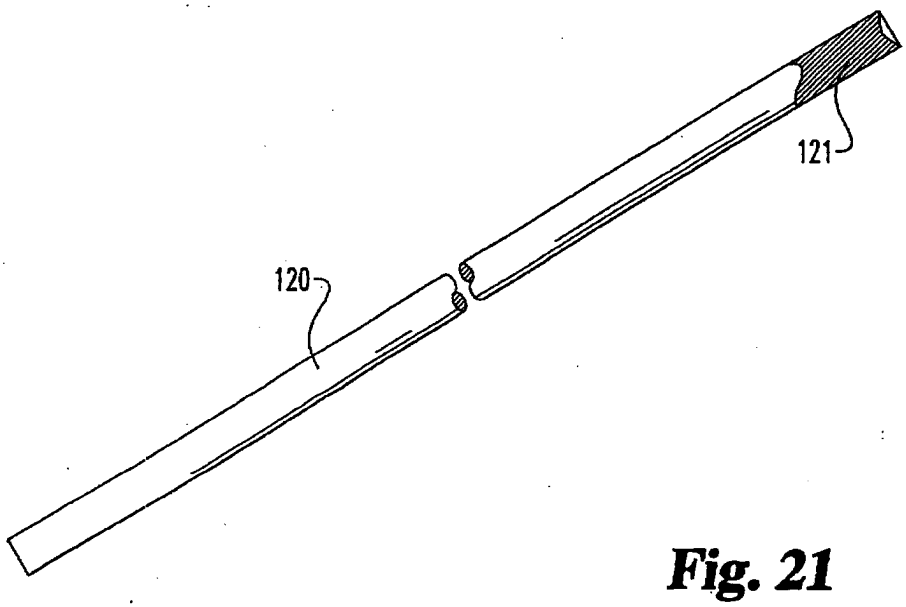

Fig. 21

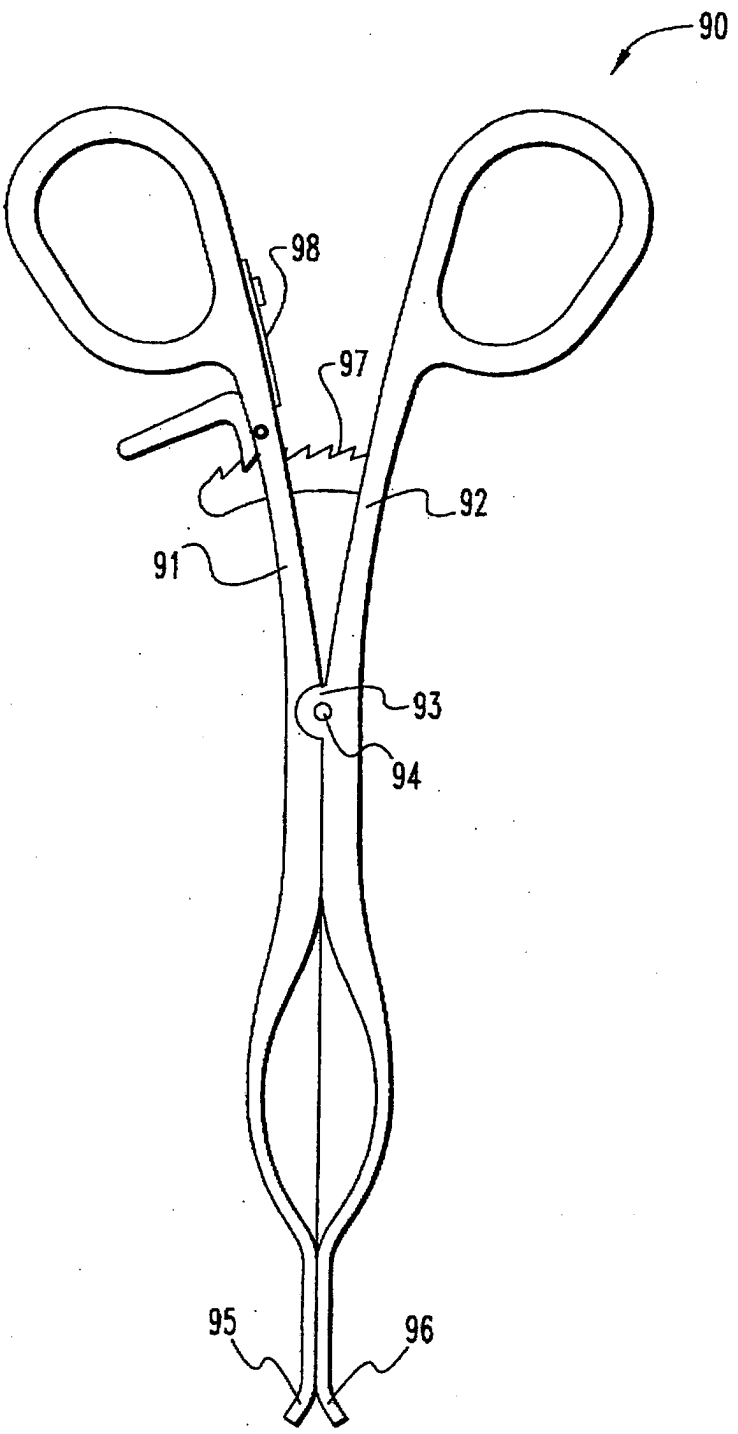

Fig. 15

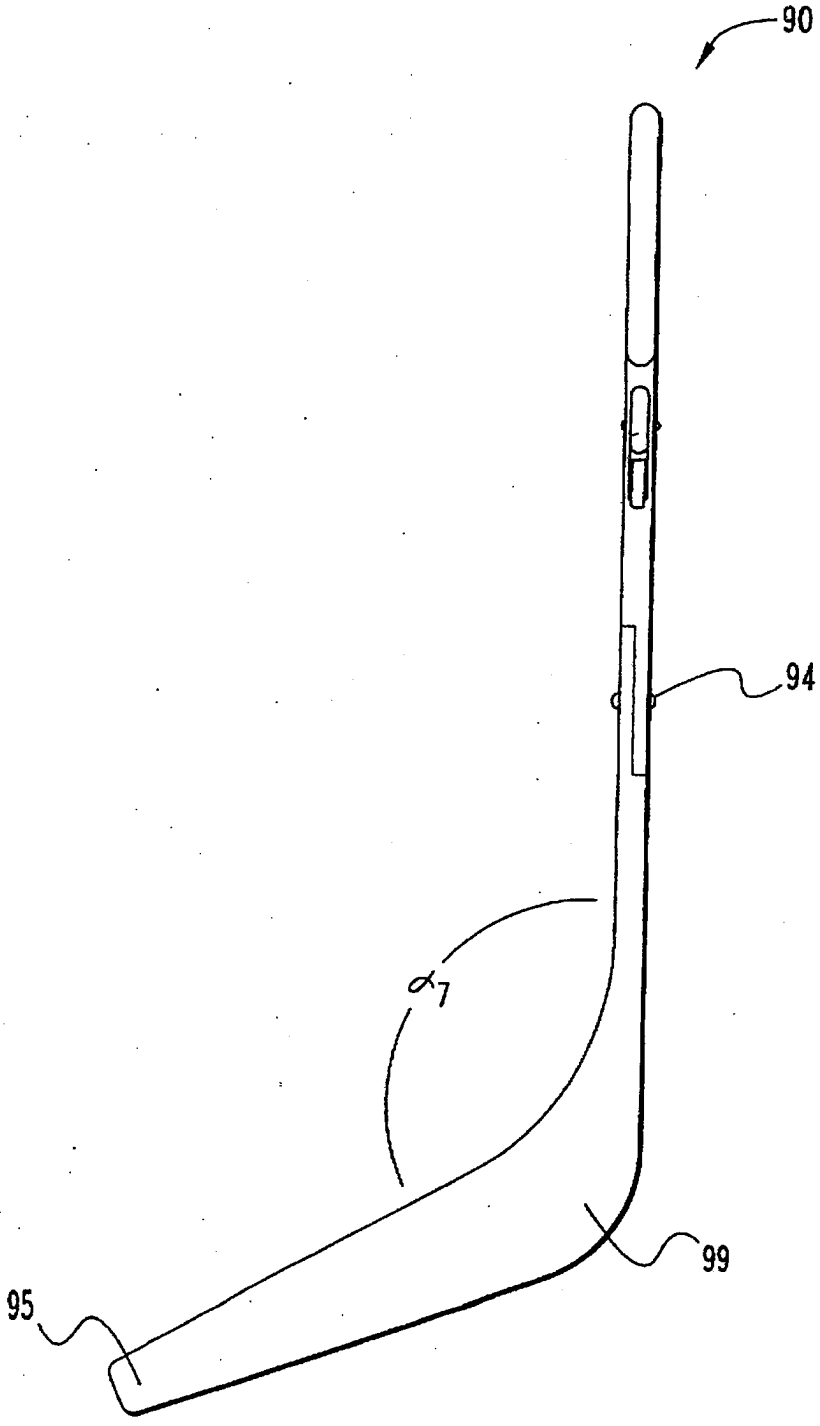

Fig. 16

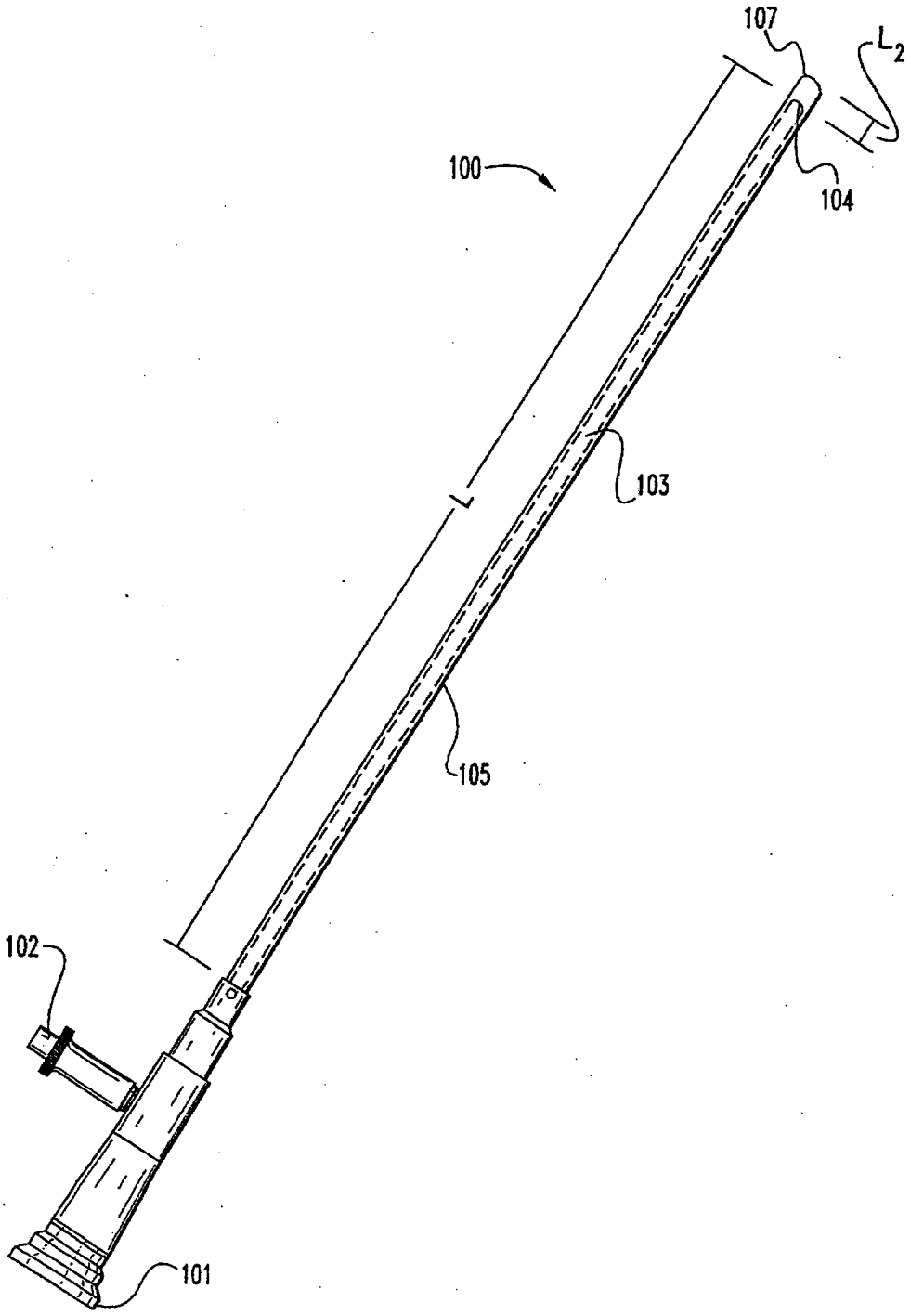

Fig. 17

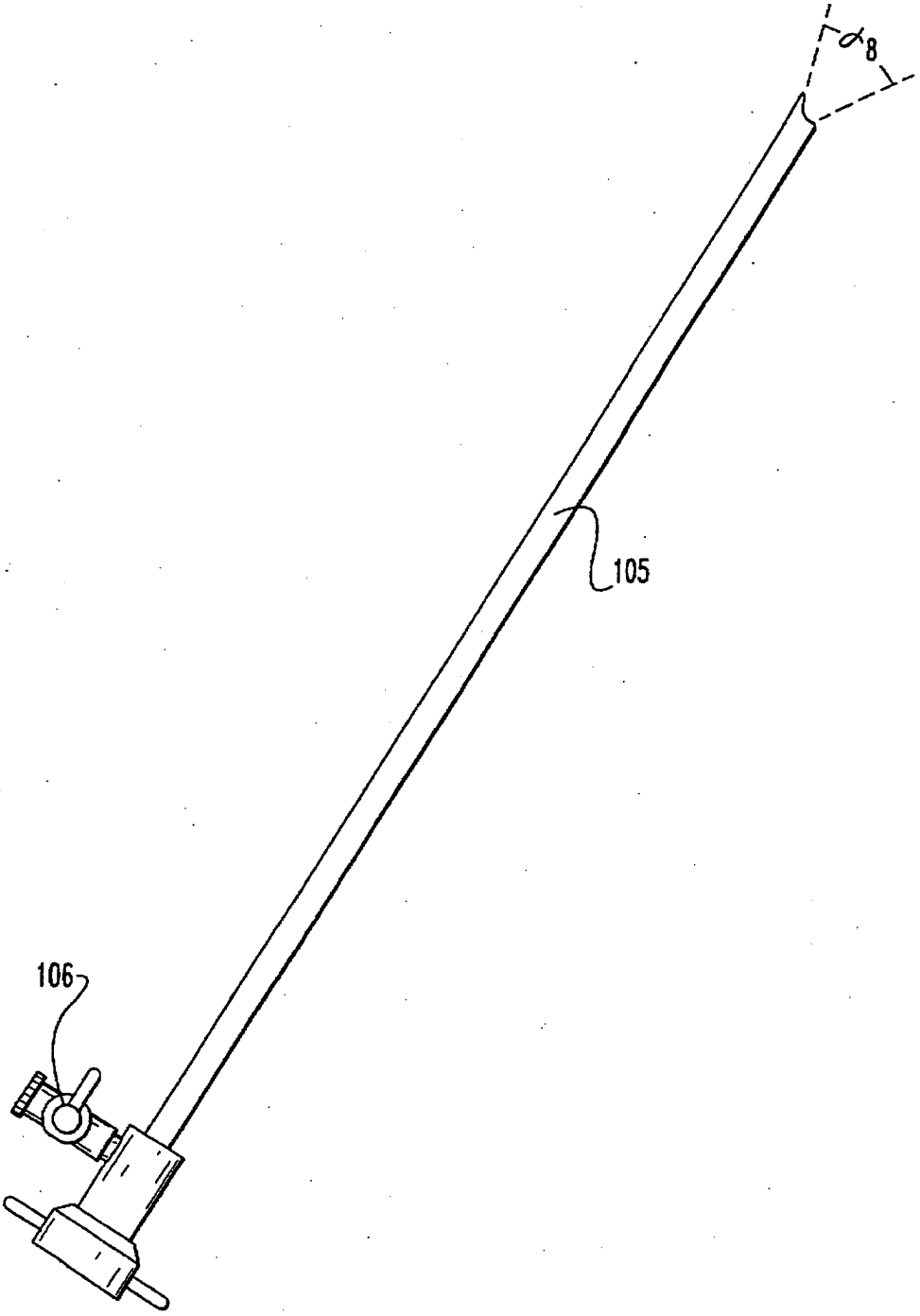

Fig. 18

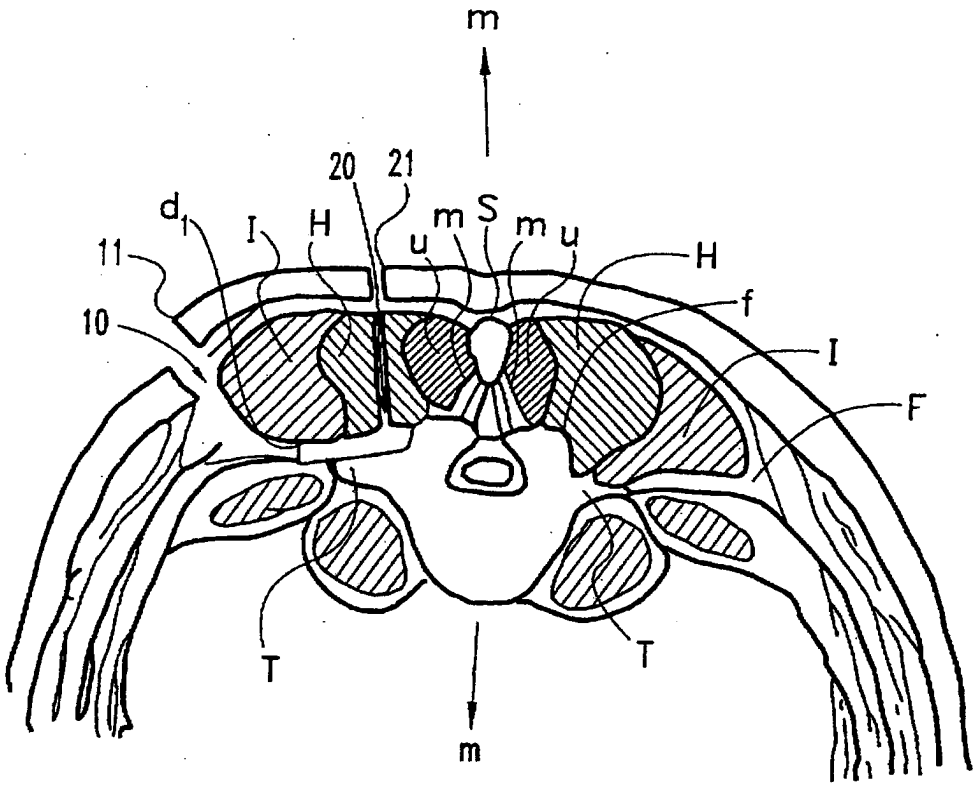

Fig. 19

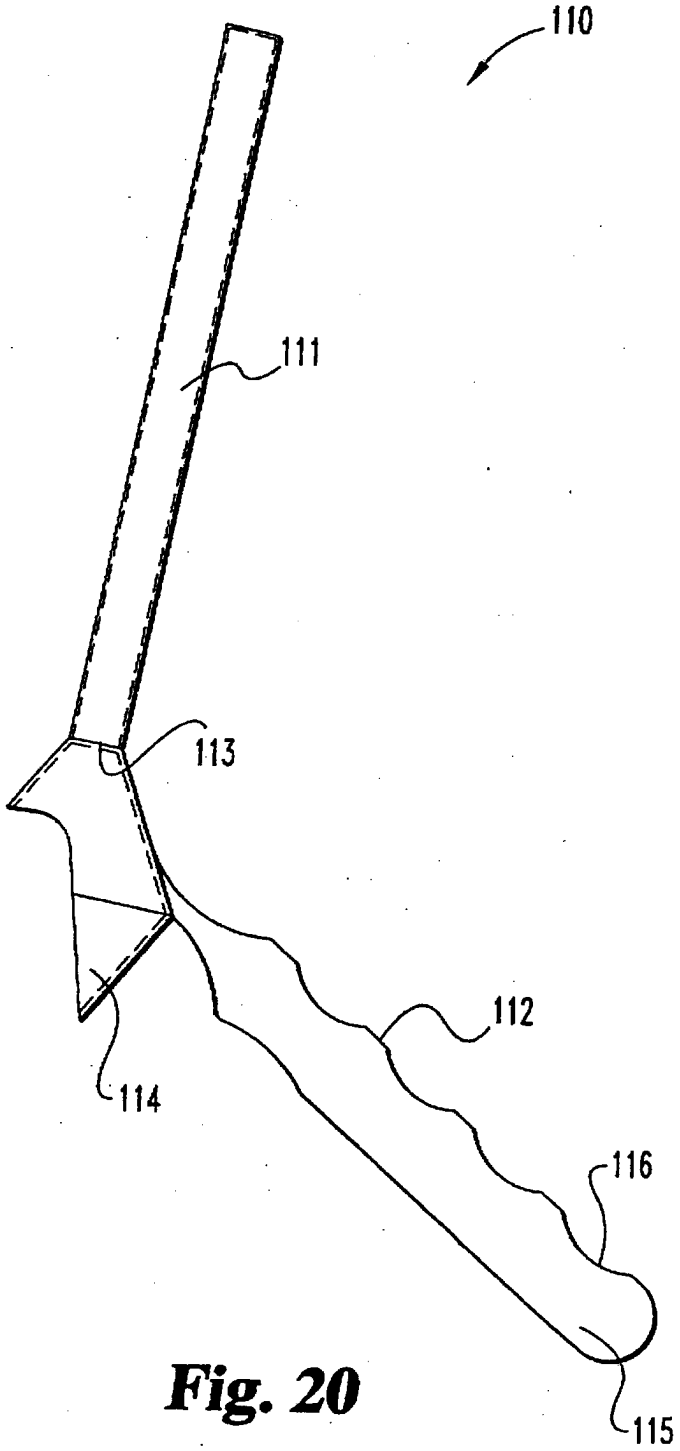

Fig. 20

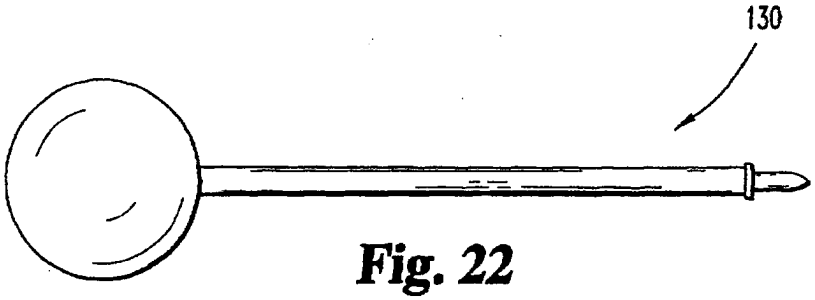

Fig. 22

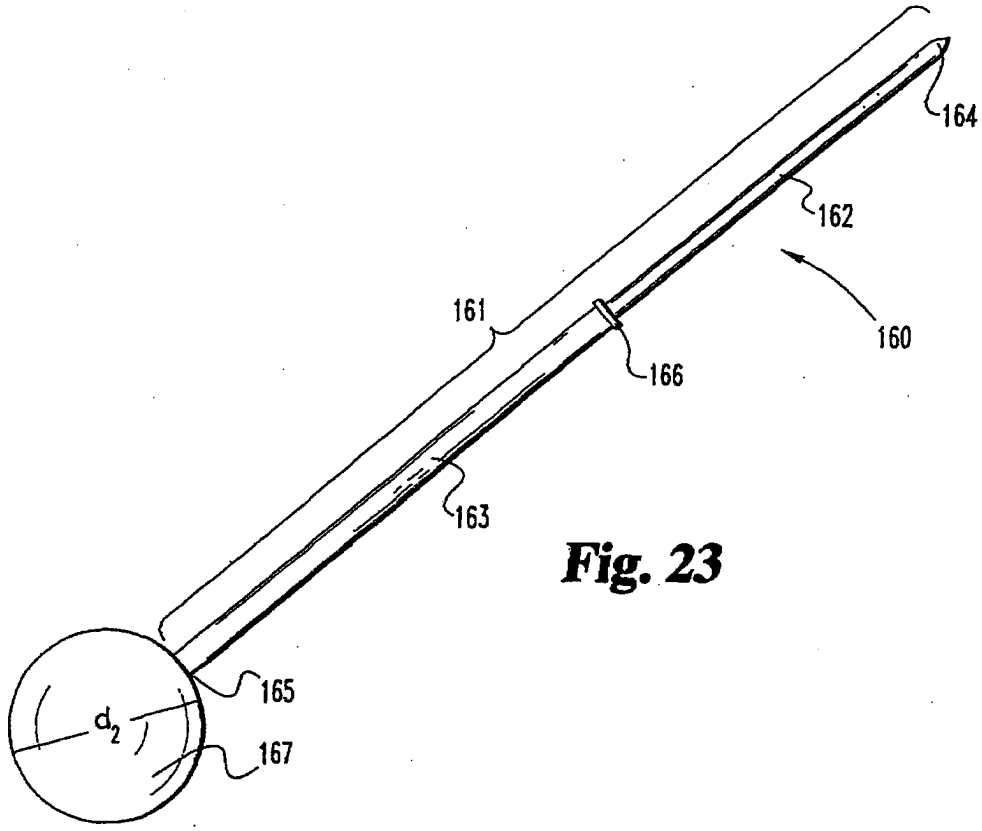

Fig. 23

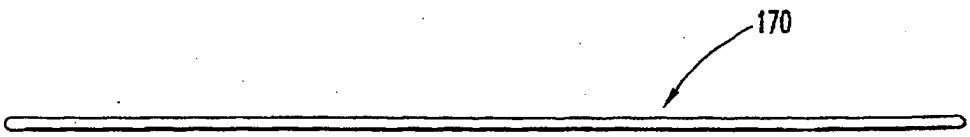

Fig. 24

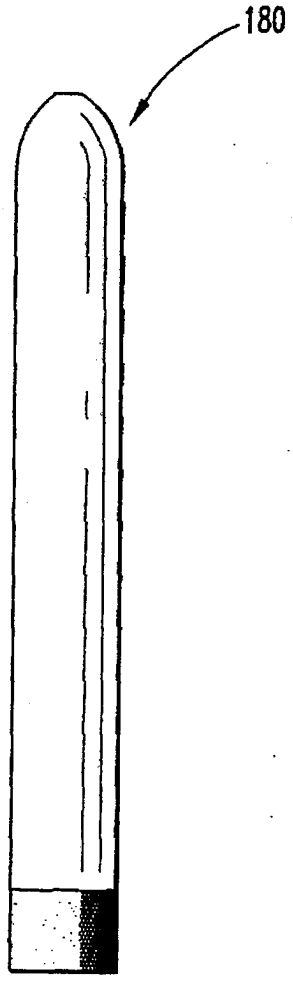

Fig. 25

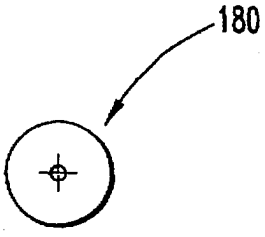

Fig. 26

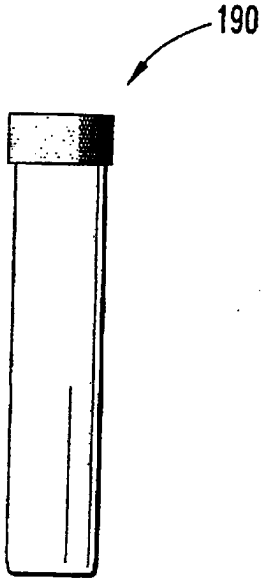

Fig. 27

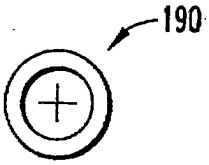

Fig. 28

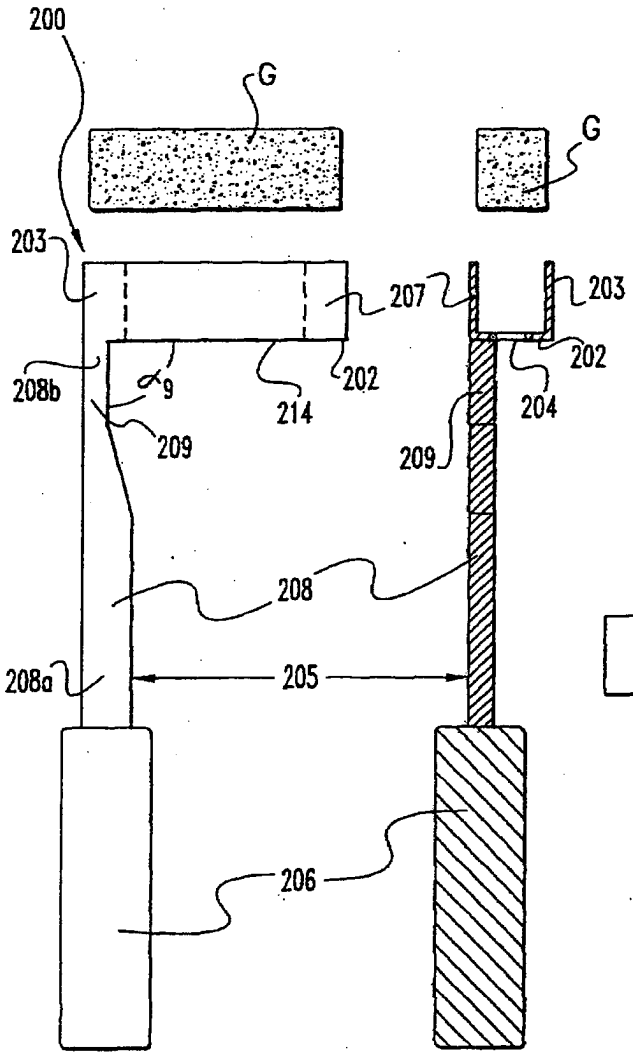

Fig. 29a

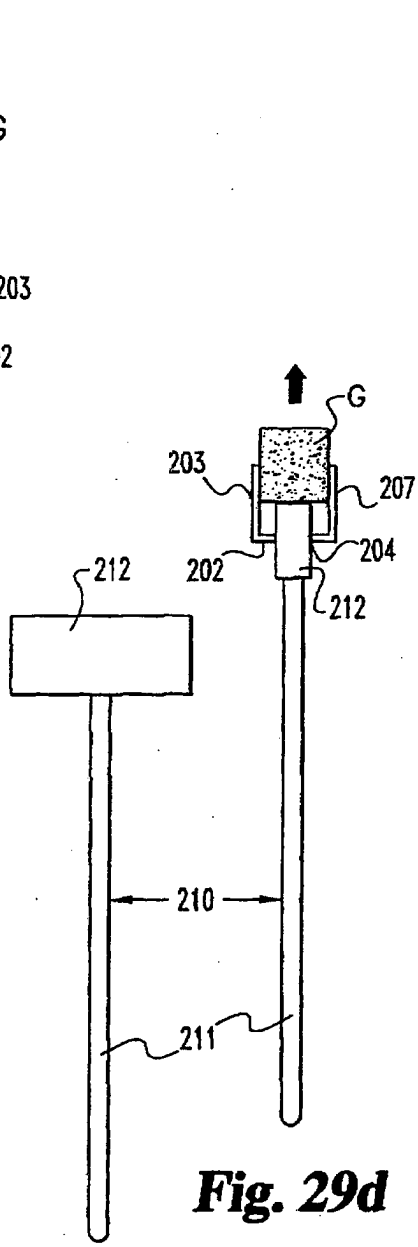

Fig. 29b

Fig. 29d

Fig. 29c

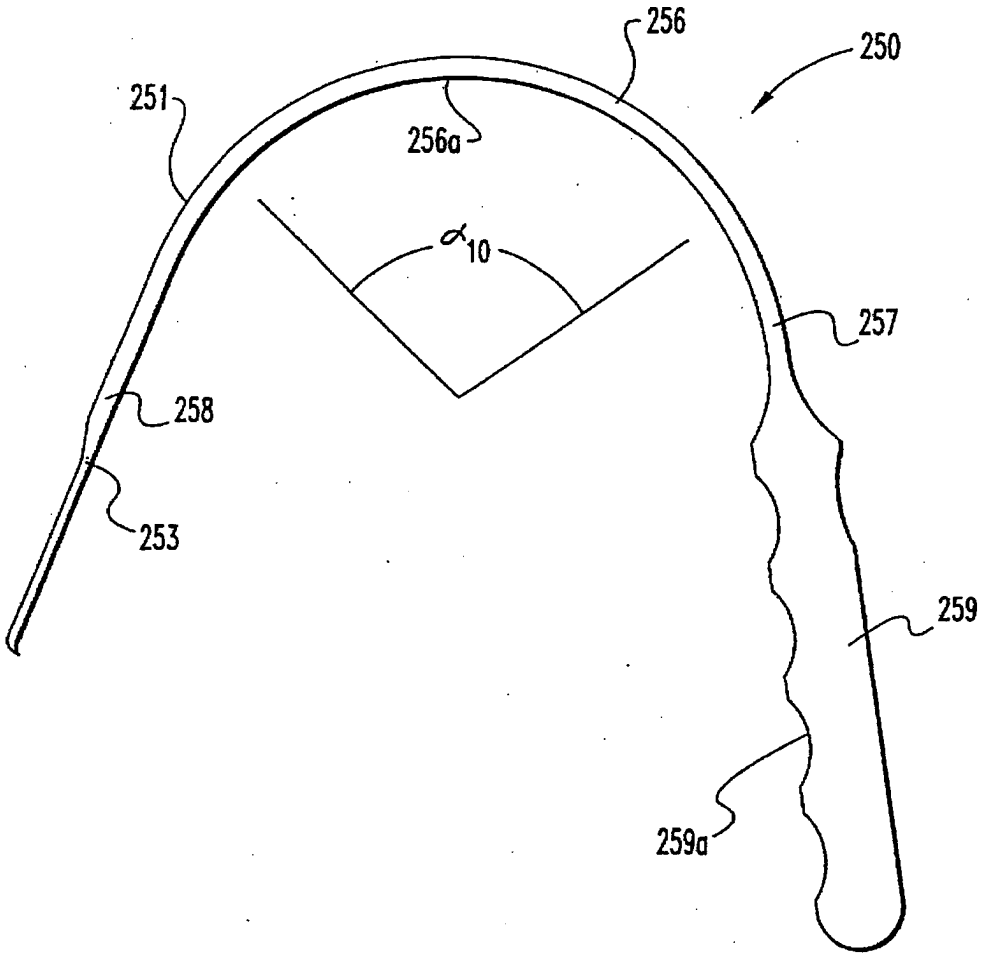

Fig. 30

MINIMALLY INVASIVE SPINAL SURGICAL METHODS AND INSTRUMENTS

FIELD OF THE INVENTION

The present invention relates to devices, instruments and methods for performing percutaneous minimally invasive spinal surgeries, particularly at locations deep within the body. One specific application of the invention concerns endo-surgical postero-lateral approaches to the intertransverse interval for arthrodesis.

BACKGROUND OF THE INVENTION

Spinal fusion is indicated to provide stabilization of the spinal column for painful spinal motion and disorders such as structural deformity, traumatic instability, degenerative instability, and post-resection iatrogenic instability. Fusion, or arthrodesis, is achieved by the formation of an osseous bridge between adjacent motion segments. This can be accomplished within the disc space, anteriorly between contiguous vertebral bodies or posteriorly between consecutive transverse processes, laminae or other posterior aspects of the vertebrae.

An osseous bridge, or fusion mass, is biologically produced by the body upon skeletal injury. This normal bone healing response is used by surgeons to induce fusion across abnormal spinal segments by recreating spinal injury conditions along the fusion site and then allowing the bone to heal. A successful fusion requires the presence of osteogenic or osteopotential cells, adequate blood supply, sufficient inflammatory response, and appropriate preparation of local bone. This biological environment is typically provided in a surgical setting by decortication, or removal of the outer, cortical bone to expose the vascular, cancellous bone, and the deposition of an adequate quantity of high quality graft material. To provide the best possible patient care, the surgeon is presented with the challenge of surgically accessing the fusion site and providing graft material to the site without causing excessive morbidity and trauma to healthy tissue.

The lumbar spine is of particular interest because of the great number of cases requiring fusion and the difficulty in treating that area. Lumbar spine fusions represent over 95% of the surgical treatment for mechanical back pain and spinal instability associated with trauma or neurological pain. The lumbar region is a challenging area for fusion because of the great mobility and mechanical stresses. Unfortunately, solid union of the effected vertebrae can not always be achieved by traditional methods. Each of the three major lumbar fusion procedures, interbody fusion, posterior fusion and intertransverse process fusion have their share of complications and pseudoarthrosis.

Of the three, intertransverse arthrodesis has been preferred because it is the most reliable method for treating deformity, instability, or painful lumbar segments. This procedure provides high rotatory and translatory stability with sufficient rigidity. Furthermore, the risk of pseudoarthrosis is low probably due to the large contiguous surface area for grafting provided by the transverse processes. In spite of its popularity and relative success, therapeutic intertransverse arthrodesis still suffers from three primary weaknesses: 1) the incidence of nonunion can be as high as 35%; 2) iliac bone graft donor site morbidity occurs in up to 30% of patients; and 3) extensive dissection of paraspinal muscles at and adjacent to the levels being fused may cause fusion disease.

Either the inter-muscular or midline approaches have been most commonly used for intertransverse process arthrodesis. In the midline approach shown in FIG. 1, muscle stripping begins at the spinous process S and proceeds across the laminae M, over the capsule of the facet f joint, down the lateral wall of the superior facet process f and out to the tip of the transverse process P. The inter-muscular approach, which is depicted in FIG. 2 begins with a subperiosteal dissection of bone at the lateral border of the superior facet process f. In both approaches, the posterior primary ramus of the segmental nerve root must be divided along with the vascular tree which accompanies it. Pressure necrosis of the paraspinal muscles can result from prolonged retraction for the deep exposure. In both approaches the incision is long and extensive muscle stripping is required at least one half level above and below the level of the intended fusion to mobilize the thick muscle mass.

These procedures, like most open spinal surgeries, require a recovery room time of several hours and several weeks of post-operative recovery time due to the use of general anesthesia and the destruction of tissue during the surgical procedure. The long incision, extensive muscle stripping, prolonged retraction of tissues, denervation and devascularization of tissue of these traditional surgical procedures cause significant trauma to the intervening tissues. Sometimes this trauma leads to persistent pain and impairment which has been labeled "fusion disease." In some cases, these invasive procedures frustrate the surgeon's purpose by causing fusion disease which can be more severe than the condition leading to the surgical intervention. Not surprisingly, many patients are reluctant to seek surgery as a solution to pain from spinal conditions because of the severe postoperative pain associated with the muscle dissection and the risks of open and prolonged spinal surgery.

Less invasive alternatives such as arthroscopic techniques have been developed to reduce pain, post-operative recovery time and the destruction of healthy tissue. Orthopedic surgical patients have particularly benefited from minimally invasive surgical techniques. The site of pathology is accessed through portals rather than through a large open incision thus preserving the integrity of the intervening tissues. These minimally invasive techniques also often require only local anesthesia. The avoidance of general anesthesia and significant tissue trauma reduces post-operative recovery time and the risk of complications. Many of these procedures are performed on the shoulder and knee on an outpatient basis with great success.

Minimally invasive surgical techniques are particularly desirable for spinal applications because of the need for access to locations deep within the body and the danger of damage to intervening vital tissues. In order to reduce the post-operative recovery time and pain associated with spinal and other procedures, various micro-surgical techniques have been developed. For example, in micro-surgical discectomies, the disc is accessed by cutting a channel from the surface of the patient's back to the disc through a small incision. An operating microscope or loupes is used to visualize the surgical field. Small diameter micro-surgical instruments are passed through the small incision and between two laminae and into the disc. The intervening tissues are disrupted less because the incision is smaller. Although these micro-surgical procedures are less invasive, they still involve some of the same complications associated with open procedures, such as injury to the nerve root and dural sac, perineural scar formation, reherniation at the surgical site and instability.

Laparoscopic and thoracoscopic techniques have been developed for anterior approaches to the thoracic and lumbosacral spine. Sofamor Danek Group markets instruments

used in a laparoscopic bone dowel technique for anterior interbody fusions as an alternative to standard open anterior retroperitoneal approaches. In U.S. Pat. No. 5,195,541, Obenchain discloses a video assisted method of performing a laparoscopic discectomy using an anterior approach. These techniques typically use carbon dioxide gas as the visualization medium. Other viable alternative for lumbar procedures are needed, however, because the anterior approach is not always indicated. For example, the lumbar spine is not easily accessible anteriorly due to the danger to the great vessels and the immobility of the psoas muscle. There are also risks of complications such as bowel perforation and trauma to the ureters or the sympathetic plexus. Adhesions due to previous abdominal operations may also limit the usefulness of the anterior approach.

U.S. Pat. No. 4,545,374 to Jacobson discloses a percutaneous lumbar discectomy using a lateral approach under fluoroscopic X-ray. The advantage of this procedure is that the lateral approach does not intersect bone, nerves, blood vessels, major back support muscles or ligaments which would otherwise have to be cut or retracted. This procedure is limited because it does not provide direct visualization of the work site and both the patient and the surgeon are exposed to radiation. Although the patent discloses that the procedure is normally performed in about fifteen minutes, the total exposure time for the surgeon could be significant over a period of time. Furthermore, the patient may be exposed for a longer period of time if the surgeon is relatively inexperienced with this technique or if complications arise.

Other procedures have been developed which include arthroscopic visualization of the spine and intervening structures. U.S. Pat. Nos. 4,573,448 and 5,395,317 to Kambin disclose percutaneous decompression of herniated discs with a posterolateral approach. Fragments of the herniated disc are evacuated through a cannula positioned against the annulus. The '317 Kambin patent discloses a biportal procedure which involves percutaneously placing both a working cannula and a visualization cannula allowing simultaneous visualization and suction, irrigation and resection in disc procedures. The posterolateral approach is employed for discectomy to avoid the need for laminectomy. In U.S. Pat. Nos. 5,171,279 and 5,357,983, Matthews discloses percutaneous discectomy and subcutaneous suprafascial internal fixation methods. U.S. Pat. No. 5,439,464 to Shapiro discloses a method and instruments for performing arthroscopic spinal surgeries such as laminectomies and fusions with a mid-line or medial posterior approach using three cannulae each inserted through a separate incision.

While the development of these spinal procedures is a major step towards reducing recovery time because they require less muscle dissection, these procedure still suffer from many of the trauma-inducing disadvantages of previous spinal surgery techniques and tools. One disadvantage is that the cannulae are inserted through stab wounds in imprecise locations. Although the devices are designed to reduce tissue trauma by pushing past the muscle with a cutting or tissue moving end, the cannulae are still inserted through tissue and muscle to arrive at the working space. In most cases, nerve retraction is still required. Furthermore some of these procedures also require a gas or fluid maintained working space.

Fluid is required in some prior procedures to maintain the working space for proper function of optics fixed within a prior art cannula and inserted percutaneously. Irrigation, or the introduction of fluid into the working space, can often be logistically disadvantageous and even dangerous to the patient for several reasons. The introduction of fluid into the working space makes hemostasis more difficult and may damage surrounding tissue. The fluid environment can also make drilling difficult due to cavitation. The requirement for a fluid environment generally increases expenses associated with the surgery and adds to the complexity of the surgery, due in part to the relatively high volume of fluid required.

After the first challenge of accessing the fusion site is addressed, the second challenge is to promote bone growth at the fusion site without causing morbidity or trauma to healthy tissues. Bone graft materials are often used to promote spinal fusions. In order to effect solid bone bridging between two widely separated bones, the graft material must: 1) prevent ingrowth of fibrous tissue with a continuous layer of sufficient bulk; 2) provide a scaffold for the elaboration of bone matrix (osteo-conductive property); and 3) stimulate pleuripotential tissues to produce bone matrix and deposit thereon calcium-phosphate crystals to form bone (osteo-inductive property).

Unfortunately, the use of bone graft presents several disadvantages. Autograft, bone material surgically removed from the patient, can be undesirable because it may not be available in sufficient quantities. The structural integrity of the donor site can be compromised by the donor surgery, particularly when large amounts of graft are required. Prior arthrodesis operations can exhaust a patient's accessible supply of suitable autogenous bone. The donor surgery is traumatic to healthy tissue and increases the risk of infection and blood loss. Ironically, some patients complain that the graft harvesting surgery is more painful than the fusion surgery or the pain leading to the procedure. These complications are aggravated for lumbar fusions in which larger amounts of graft material are required.

Allograft material, which is obtained from donors of the same species, is more readily obtained. However, allografts can be disadvantageous because of disease transmission, immune reactions and religious objections. Furthermore, allogenic bone does not have the osteoinductive potential of autogenous bone and therefore may provide only temporary support, leading to pseudoarthrosis and eventual collapse of the disc space.

Bone morphogenetic proteins (BMPs) have been found to significantly reduce the time required to achieve fusion. Several recombinant human BMPs (rhBMPs) are in various stages of development and are promising bone graft substitutes. The use of recombinant BMPs will conceivably reduce recovery time by speeding the rate of bone growth and solve the problems associated with autograft and allograft, such as disease transmission, lack of osteoinductivity, immunoreactivity, as well as morbidity and trauma to a donor surgical site.

The use of any graft material requires caution. For example, when spinal fusion through the midline approach is combined with decompression or laminectomy of the spinal canal, any contaminant of one tissue space may cross-contaminate the other. Bone graft materials, in general, pose the risk of mechanical or iatrogenic complications when introduced into the epidural space. Infection in any area of the midline wound can spread to the full extent of the dissection or beyond. The safety of using BMPs in such procedures has not yet been established. It is unknown what the effect of such proteins will have in the spinal canal, intra-pleural or intra-peritoneal cavities, or retroperitoneum. Certainly there is a possibility of such complications as adhesions, arachnoiditis and retroperitoneal fibrosis.

Two major issues face surgeons in arthrodesis surgeries: exposure of the segments to be fused without causing fusion

disease or other complications; and, the safety, efficacy and supply of graft materials. Therefore, a need has remained for surgical techniques which avoid the tissue trauma associated with open spinal surgery as well as risks and limitations associated with endoscopic surgery. A need has also remained for intertransverse process fusion procedures which do not cause fusion disease or other complications. A need has also remained for surgical procedures which safely use recombinant bone morphogenetic proteins in spinal fusions.

SUMMARY OF THE INVENTION

Briefly describing one aspect of the invention, there is provided minimally invasive spinal surgical techniques and tools. The methods include separating the iliocostalis lumborum muscle from the anterior leaf of the thoracolumbar fascia to create a channel from the patient's skin to the intertransverse interval. In one embodiment, the method also includes delivering graft material through the channel to the intertransverse interval. In one specific embodiment the channel has a diameter of about 2.5 cm. A device according to one aspect of the present invention includes a retraction portion having a flattened plate configured to atraumatically retract tissue to create a working space within an endosurgical site and a curved shaft attached to the retraction portion. The shaft includes a bend subtending an angle of at least about 120 degrees, preferably about 160 degrees. A gripping portion is attached to the shaft and is configured for manually gripping and manipulating the device.

One object of the present invention is to provide persons suffering from diseases and injuries of the lumbar spine an endo-surgical alternative to traditional open lumbar spinal arthrodesis. Another object is to reduce morbidity, hospital stay, rehabilitation and cost, both financial and human. Still another object of this invention is to reduce the morbidity of lumbar spine arthrodesis by eliminating the surgical harvesting of bone graft.

One advantage of this invention is that it allows access to the intertransverse interval without major muscle dissection and nerve retraction. Another advantage is that this invention avoids the conceivable risks of bone morphogenetic proteins.

BRIEF DESCRIPTION OF THE DRAWINGS

FIG. **1** is a transverse section of the human body showing the midline approach to the intertransverse interval.

FIG. **2** is a transverse section of the human body showing the inter-muscular approach to the intertransverse interval.

FIG. **3** is a transverse section of the human body showing one approach of this invention to the intertransverse interval.

FIG. **4** is a partial longitudinal section of the human body showing incisions for the embodiment shown in FIGS. **3** and **19**.

FIG. **5** is a side elevational view of a segment of three human lumbar vertebrae.

FIG. **6** is a side elevational view of a self-retaining retractor provided by this invention.

FIG. **7** is an end elevational view of the retractor shown in FIG. **6**.

FIG. **8** is a side elevational view of an endosurgical retractor provided by this invention.

FIG. **9** is a front elevational view of the retraction portion of the retractor shown in FIG. **8**.

FIG. **10** is a top elevational view of an endosurgical elevator provided by this invention.

FIG. **11** is a side elevational view of the elevator shown in FIG. **10**.

FIG. **12A** is a cross-sectional view of the elevator shown in FIGS. **10** and **11** taken along lines A—A.

FIG. **12B** is a cross sectional view of the elevator shown in FIGS. **10** and **11** taken along lines B—B.

FIG. **13** is a side elevational view of an endosurgical bipolar cautery device provided by this invention.

FIG. **14** is a side elevational view of an endosurgical blunt probe provided by this invention.

FIG. **15** is a top elevational view of a self-retaining endosurgical speculum provided by this invention.

FIG. **16** is a side elevational view of the speculum shown in FIG. **15**.

FIG. **17** is a side elevational view of an endoscope provided by this invention.

FIG. **18** is a side elevational view of a sheath for use with the endoscope shown in FIG. **17**.

FIG. **19** is a transverse section of the human body showing the approach of FIG. **3** with an accessory portal.

FIG. **20** is a side elevational view of a graft delivery device.

FIG. **21** is a graft delivery piston for use with the device depicted in FIG. **20**.

FIG. **22** is a side elevational view of an awl provided by this invention.

FIG. **23** is a side elevational view of a blunt probe provided by this invention.

FIG. **24** is a side elevational view of guide pin provided by this invention.

FIG. **25** is a side elevation view of a bone graft harvesting dilator.

FIG. **26** is a cross-sectional view of the dilator shown in FIG. **25** taken along lines **26**—**26**.

FIG. **27** is a side elevational view of a bone graft harvesting cannula.

FIG. **28** is a top view of the bone graft harvesting cannula shown in FIG. **27**.

FIG. **29A** is a side elevational view of the carrier element of an inserter provided by this invention.

FIG. **29B** is a front longitudinal section of the carrier element shown in FIG. **29A**.

FIG. **29C** is a side elevational view of an obturator portion designed to operate with the carrier portion shown in FIG. **29A** and B.

FIG. **29D** is a front elevational view of the inserter of FIGS. **29A**–C showing the obturator operating to expel an implant from the carrier element.

FIG. **30** is a side elevational view of an endosurgical retractor provided by this invention.

DESCRIPTION OF THE PREFERRED EMBODIMENTS

For the purposes of promoting an understanding of the principles of the invention, reference will now be made to the embodiment illustrated in the drawings and specific language will be used to describe the same. It will nevertheless be understood that no limitation of the scope of the invention is thereby intended, such alterations and further modifications in the illustrated device, and such further applications of the principles of the invention as illustrated therein being contemplated as would normally occur to one skilled in the art to which the invention relates.

The present invention provides devices and surgical procedures for minimally invasive postero-lateral approaches to an intertransverse interval. This invention is based upon the discovery that the lumbar region can be accessed postero-laterally between the major back muscles without the need for major muscle dissection. Instruments can be inserted between natural muscle planes to reduce trauma and fusion disease. Unlike other traditional spinal surgical procedures, this approach extends between and not through major back muscles. This technique also avoids significant muscle and nerve retraction and does not traverse vital structures, viscera, major vessels or neurologic elements. The methods also preserve a natural tissue barrier between the fusion site and the epidural space to prevent the debilitating effects of expulsion of the fusion implant, seepage of osteogenic factor or spread of infection from the fusion site and into the spinal canal. Advantageously, this avoids the trauma and morbidity associated with fusion disease and minimizes any danger of migration or inappropriate action of BMPs. Furthermore, the use of recombinant BMPs with this invention also avoids a donor surgery for autograft or the risks of allograft.

The feasibility of this approach capitalizes on the anatomy of the back, in particular the filmy areolar plane between the erector spinae muscles and the thick thoracolumbar fascia F. Referring to FIGS. 1–4, the fascia F is thick and begins at the spinous processes S of the lumbar vertebrae V, extends laterally to the aponeurosis A_O of the internal oblique O and transverses, reflecting acutely antero-medially along the anterior surface I_A of the iliocostalis muscle I, then attaches to the tips of the transverse processes P. The quadratus lumborum muscle Q lies directly anterior to the anterior portion N of the thoraco-lumbar fascia F. The aponeurosis A_D of the latissimus dorsi muscle D is confluent with the posterior portion B of the thoraco-lumbar fascia F at the spinous processes S, but is a separate layer as the thoraco-lumbar fascia F reflects anteriorly. The multifidus muscles U originate laterally at the articular facets f and insert medially on the spinous processes S of the vertebrae V located two to four levels superiorly. The longissimus thoracic muscle H originates from the transverse processes P and insert on the transverse processes P several levels above. As shown in FIG. 4, the iliocostalis muscles I are the most laterally placed of the paraspinal muscles and originate on the wing of the ilium L and insert at the angle of the lower five ribs R. The iliocostalis I is contained within the compartment of the thoraco-lumbar fascia F but has no attachment to the fascia F and is easily separated from it. A working space can be created between the major paraspinal muscles and the thoracolumbar fascia for small scopes and instruments with relatively minimal trauma.

The present invention provides techniques and tools which exploit these features of anatomy for minimally invasive approaches to the spine. In one embodiment, a method for approaching the intertransverse process interval T (shown in FIG. 5) includes separating the iliocostalis lumborum muscle I from the anterior leaf N of the thoracolumbar fascia F to create a primary portal or channel **10** from the patient's skin K to the intertransverse interval T as shown in FIG. 3. Preferably, a first portion **15** of the channel **10** has a major diameter d_1 of less than about 4.0 cm. Most preferably the first portion **15** has a diameter d_1 of about 2.5 cm.

In some embodiments of this invention, the methods of this invention can be used for arthrodesis of an intertransverse interval T in the lumbar spine. Discectomy and decompression can be first performed using known techniques, preferably minimally invasive techniques. Advantageously, the arthrodesis procedures of this invention do not require that the patient be repositioned after posterior midline spinal canal surgery. According to the methods of this invention bone graft and graft substitutes can be safely implanted in the intertransverse interval without risk of mechanical or biological invasion of the epidural space even after laminectomy. The methods safely approach the interval without violating the integrity of a tissue plane separating the channel from the laminectomy site. The tissue plane or barrier provided by the posteromedio attachments of the longissimus thoracic H at the superior articular facet f of the adjacent vertebrae protects the spinal canal from the graft implant if it is expelled or if osteogenic factors seep from the implant.

In the practice of one specific embodiment of this invention, the patient is placed in the prone position under anesthesia of choice. Any suitable anesthesia is contemplated. Preferably, a local anesthesia will be used in combination with a sedative. One advantage of this invention is that the risks and long recovery periods of general anesthesia can be avoided.

After the patient has been properly positioned and anesthetized, a first primary transverse incision **11** (FIG. 4) is made through the skin K approximately 10 cm from the midline at the level of the spinous process S cephalad to the fusion site which is preferably at intertransverse interval T. The primary incision **11** is large enough to accept a cannula but preferably less than about 4.0 cm in length and most preferably about 2.5 cm in length. The incision **11** is centered over the border of the reflection of the thoracolumbar fascia F. This reflection is palpable at the edge of the topological prominence of the iliocostalis muscle I.

The skin is then retracted with a self retaining retractor, preferably with a retractor **30** such as depicted in FIGS. **6** and **7**. The subcutaneous fat is preferably dissected to expose the posterior leaf B of the thoracolumbar fascia F. A deeper primary incision (not shown) can then be made through the thoracolumbar fascia F to expose the iliocostalis I. The deeper primary incision is preferably centered beneath the first primary incision **11** and made in the line of the fibers of the fascia F. The length of the deeper primary incision is preferably no longer than the first primary incision **11** and is most preferably about 2.5 cm.

A primary portal or working channel **10** is created through the first transverse incision **11** and the second primary incision to the intertransverse interval T. This is done by inserting an endosurgical retractor, such as the device **50** depicted in FIGS. **8** and **9**, between the muscles and the fascia F. The first portion **15** of the channel **11** extends between the lateral border of the iliocostalis I and the anterior leaf N of the fascia F. To accomplish this, the lateral border of the iliocostalis I can be dissected from the anterior leaf N of the thoracolumbar fascia F. The iliocostalis I may also be dissected from the fascia F medially about 0.5 cm dorsal o the junction of the transverse process P and the lateral cortex of the cephalad articular facet f. Dissecting and elevating the fascia F from the anterior border I_a of the iliocostalis I and the anterior border H_a of the longissimus thoracic H muscles creates a second portion **16** of the channel **10**. The posteromedio attachment of the longissimus thoracic muscle H to the superior articular facet f is preserved. These muscles provide a natural tissue barrier between the fusion site and the epidural space. Preferably the intertransverse process membrane (not shown) is also medially dissected to the hiatus of the posterior rami of the segmental nerve and vessels. This is most conveniently accomplished with an endosurgical elevator **60** such as the

one depicted in FIGS. 10–12B. Hemostasis can be effected with an endosurgical bipolar cautery such as the device 70 depicted in FIG. 13.

Digital palpation will identify the cephalad and the caudal transverse processes P. A probe or obturator such as the endosurgical blunt probe 80 shown in FIG. 14 can be inserted between the transverse processes P. This probe 80 includes a shaft 85 having a knurled gripping portion 81 at one end 82 and a bullet tip 83 at an opposite end 84. Preferably, the identity of the intertransverse process interval T will also be confirmed by X-ray. A speculum such as the self-retaining endosurgical speculum 90 shown in FIGS. 15 and 16 can be inserted between the iliocostalis I and the anterior thoracolumbar fascia F to create a working space or the channel 10. A cannula can then be inserted into the channel 10. The cannula may be either a working or a visualization cannula such as the sheath 103 depicted in FIG. 18 for the endoscope 100 shown in FIG. 17.

Alternatively, the working channel 10 to the intertransverse interval T can be created in the following manner. The first portion 15 of the channel 11 is created by developing the areolar plane between the iliocostalis I and the anterior leaf N of the thoracolumbar fascia F. This is preferably accomplished by digital dissection to the junction of the iliocostalis I and longissimus thoracic H. Digital dissection will identify the cephalad and caudal transverse processes P. Preferably, the identity of the transverse process interval T will be confirmed by X-ray. For this purpose, a probe or obturator such as the endosurgical blunt probe 80 shown in FIG. 14 can be inserted between the transverse processes P.

The second portion 16 of the channel 10 is created by dissecting the longissimus thoracic muscle H from its attachments to the thoracolumbar fascia F, the transverse processes P and the intertransverse process membrane (not shown). Because the longissimus thoracis muscle H inserts in a cephalad direction, the surgeon will preferably begin this dissection of the muscle H from the caudal transverse process P. Most preferably, this dissection is performed using a combination of palpation, with the surgeon's index finger controlling the tip of the target transverse process P, and direct visualization. The attachment of the longissimus thoracic H to the superior articular facet f of the adjacent vertebrae is preserved.

Direct visualization of the plane of dissection may be accomplished by inserting a device into the channel 10. In one embodiment an endosurgical retractor 50 depicted in FIGS. 8 and 9 is inserted between the muscles and the fascia F. The ilicostalis I and longissimus H muscles are retracted dorsally to create the working space. An endoscope such as the scope 100 depicted in FIG. 17, protected by a sheath 105 shown more clearly in FIG. 18, is inserted into the working space to visualize the dissection which develops the second portion 16 of the primary portal 10. The second portion 16 completely exposes the transverse processes P, the junction J of the processes P and an anterior portion fa of the superior facet processes f, and the intertransverse process membrane (not shown). Preferably the intertransverse process membrane is dissected medially to the hiatus of the posterior rami of the segmental nerve and vessels. This is most conveniently accomplished with an endosurgical elevator 60 such as the one depicted in FIGS. 10–12B. Hemostasis is effected with an endosurgical bipolar cautery such as the device 70 depicted in FIG. 13.

In some embodiments, an accessory portal 20 (FIGS. 4 and 19) is created through a small secondary incision 21 for decortication or visualization after the transverse processes P are exposed. The incision 21 is preferably about 0.5 cm in length and located about 3 cm from the midline m. When the incision 21 is about 0.5 cm it can be closed with a single skin suture. A blunt obturator or probe can then be passed through the incision 21 and between the fibers of the longissimus thoracic muscle H and into the channel 10. The direction of the obturator can be guided by digital palpation through the wound at the primary incision 11. Once the obturator is safely in the channel 10 and resting against a transverse process P, a sheath can then be passed over the obturator and the obturator removed. The sheath may be either a visualization sheath or a decorticating burr sheath.

The instrument of choice, either an endoscope or burr, is then passed into the sheath. For decortication, the accessory portal 20 permits the removal of bone from the transverse processes P and the superior facet f process without risk of the burr skipping and injuring adjacent soft tissue. Also, the orthogonal position of the endoscope and the decorticating burr gives better stereognosis to the surgeon. During insert on of graft material into the intertransverse process interval T, the surgeon may elect visualization through the accessory portal 20 when the primary portal 10 is obscured by the graft material.

Of course, the accessory portal 20 may not be necessary if a cannula is used which supports both visualization and working instruments. The accessory portal 20 is either caudal or cephalad to the primary incision 11 depending on the handedness of the surgeon and the cutting direction (clockwise or counterclockwise) of the decorticating burr. In one specific embodiment, the accessory portal 20 depicted in FIG. 19 is created through a 0.5 cm secondary incision 21 made 3–4 cm from the midline, 4–5 cm cephalad to the primary incision 11. The secondary portal 20 preferably has a diameter of about 0.5 cm.

This invention also contemplates arthrodesis of multiple motion segments. For fusion across two motion segments, the primary incision 11 is made over the middle transverse process. Where fusion of three or more motion segments is required, multiple primary incisions and portals are required.

Finally, a graft implant or material is placed in the intertransverse process interval T to promote fusion. Preferably, this is accomplished using an endosurgical graft delivery assembly 110 provided by this invention and depicted in FIGS. 20 and 21. Graft material is placed in the cannula 111 as chunks, paste, particles, or strips. The graft material is delivered directly to the base of the transverse process P and distributed to the intertransverse process interval T. In one embodiment, this is accomplished using the endosurgical elevator 60.

Any suitable graft implant or material is contemplated. Autograft, allograft, xenograft, synthetic and natural bone graft substitutes, such as ceramics and polymers, and osteogenic compositions can all be used to promote fusion in this invention. The term osteogenic composition used here means virtually any material that promotes bone growth or healing including natural, synthetic and recombinant proteins, hormones and the like.

Autograft can be harvested from locations such as the iliac crest using drills, gouges, curerres and trephines and other tools and methods which are well known to surgeons in this field. In one embodiment, autograft is harvested from the iliac crest with a minimally invasive donor surgery. In this procedure, an awl 130 (FIG. 22) and then a blunt probe 160 (FIG. 23) is inserted through a small incision to the donor location such as the iliac crest. A guide pin 170 (FIG. 24) is inserted through the incision next to the probe 160.

The probe is removed and a cannulated dilator **180** (FIGS. **25–26**) is inserted over the pin **170**. A bone graft harvesting cannula **190** (FIGS. **27** and **28**) is then inserted over the dilator **180**.

The osteogenic compositions used in this invention preferably comprise a therapeutically effective amount of a bone inductive factor such as a bone morphogenetic protein in a pharmaceutically acceptable carrier. The preferred osteoinductive factors are the rhBMPs. Most preferably, the bone morphogenetic protein is a recombinant human BMP-2. However, any bone morphogenetic protein is contemplated including bone morphogenetic proteins designated as BMP-1 through BMP-13. BMPs are commercially available from Genetics Institute, Inc., Cambridge, Mass. and may also be prepared by one skilled in the art as described in U.S. Pat. Nos. 5,187,076 to Wozney et al.; 5,366,875 to Wozney et al.; 4,877,864 to Wang et al.; 5,108,922 to Wang et al.; 5,116,738 to Wang et al.; 5,013,649 to Wang et al.; 5,106, 748 Wozney et al.; and PCT Patent Nos. WO93/00432 to Wozney et al.; WO94/26893 to Celeste et al.; and WO94/ 26892 to Celeste et al.

The use of synthetic or recombinant osteoinductive proteins or factors such as recombinant human bone morphogenetic proteins with this invention is particularly advantageous because they avoid the disadvantages of both autograft and allograft and may increase the chances fo achieving a successful fusion. Furthermore, this invention makes the use of osteoinductive proteins safer by preserving a natural tissue barrier between the fusion site and the epidural space. The safety of growth factors in the spinal canal, intra-pleural or intra-peritoneal cavities, or retroperitoneum has not yet been demonstrated. The possibility of such complication as adhesions, arachnoiditis, retroperitoneal fibrosis, etc. must be excluded before human use will be feasible. This inventive endo-surgical approach traverses no vital structures and so the risk of exposure of these structures is minimized and possibly eliminated.

The choice of carrier material for the osteogenic composition is based on biocompatibility, biodegradability, mechanical properties and interface properties. The particular application of the compositions of the invention will define the appropriate formulation. The carrier may be any suitable carrier capable of delivering the proteins to the intertransverse interval T. Most preferably, the carrier capable of being eventually resorbed into the body. One preferred carrier is an absorbable collagen sponge marketed by Integra LifeSciences Corporation under the trade name Helistat® Absorbable Collagen Hemostatic Agent. Another preferred carrier is an open cell polylactic acid polymer (OPLA). Other potential matrices for the compositions may be biodegradable and chemically defined calcium sulfate, tricalcium phosphate (TCP), hydroxyapatite (HA) and polyanhydrides. Other potential materials are biodegradable and biologically well defined, such as bone or dermal collagen. Further matrices are comprised of pure proteins or extracellular matrix components. The osteoinductive material may also be an admixture of BMP and a polymeric acrylic ester carrier, such as polymethylmethacrylic.

The most preferred carrier is a biphasic calcium phosphate ceramic. Hydroxyapatite/tricalcium phosphate ceramics are preferred because of their desirable degradation rates in vivo. Any size or shape ceramic carrier which will fit into the fusion site is contemplated. Rectangular blocks are commercially available from Sofamor Danek Group, B. P. 4-62180 Rang-du-Fliers, France and Bioland, 132 Route d:Espagne, 31100 Toulouse, France. In one specific embodiment the carrier was a rectangular block measuring 1.4 cm×1.2 cm×4.0 cm. Of course, cylindrical and other suitable shapes are contemplated. The osteoinductive factor is introduced into the carrier in any suitable manner. For example, the carrier may be soaked in a solution containing the factor.

The present invention also provides several specialized instruments for minimally invasive surgery. The self-retaining retractor **30** depicted in FIGS. **6** and **7** includes two curved elongated portions **31**, **32** attached with a fastener **45** at a pivot point **33**. Manual gripping portions **34**, **35** are attached to one end **36**, **37** of each of the elongated portions **31**, **32**. The retractor includes means for varying and securing the distance between the second ends of the elongated portions **31**, **32** for retracting skin. In one embodiment, the means includes a ratchet bar **43**, pawl lever **44** that engages the bar **43** and leaf spring **45** that biases the lever **44** against the bar **43**. Skin gripping teeth **40** are provided at the second end **41** of each of the elongated portions. In one embodiment the retractor **30** is provided with five teeth **40**, three on one portion **31** and two on the other **32**. The teeth **40** are oriented at an angle α_1 of about 90 degrees which facilitates engagement and retraction of the tissue.

This invention also contemplates a novel endosurgical retractor **50** as depicted in FIGS. **8** and **9**. The endosurgical retractor **50** includes a retraction portion **51**, a curved shaft **56** and a gripping portion **59**. The curved shaft **56** includes a proximal end **57** attached to the gripping portion **59** and a distal end **58** attached to the second end **53** of the retraction portion **51**. The shaft **56** includes a bend **56***a* defining an arc subtending an angle α_2 of at least about 120 degrees. In a most preferred embodiment, the angle α_2 is about 160 degrees. The shaft **56** also preferably includes a second bend **56***b* which bends the handle **56** in a direction away from the retraction portion **51**. The gripping portion **56**, the bend **56***b* and the shaft **56** form an angle α_3 which is at least about 90 degrees. Most preferably the angle α_3 is about 110 degrees. One purpose of the bends **56***a*, **56***b* can be appreciated with reference to FIG. **3**. In particular, the bends **56***a*, **56***b* allow the retraction portion **51** to be inserted into the channel **10** with the handle portion **59** outside the body and projecting conveniently posterior to the patient.

The retraction portion includes a first end **52** and a second end **53** with a flattened plate **54** between the first **52** and second **53** ends, as shown in FIG. **9**. The flattened plate **54** is configured to atraumatically retract tissue to create a working space within an endosurgical site. Preferably the flattened plate **54** has a width W_1 which is greater than a diameter D_1 of the shaft **56**. In a most preferred embodiment, the width W_1 is about three times greater than the diameter D_1. In one specific embodiment the plate **54** has a width W_1 of 1.5 cm and a length L_1 of 3.5 cm. The first end **52** can include an edge **55** for engaging tissue. The edge **55** is preferably curved toward the gripping portion **59** and forms an angle α_4 which is between 90 degrees and 150 degrees (FIG. **8**). Most preferably the angle α_4 is about 135 degrees.

The gripping portion **59** is configured for manually gripping and manipulating the device **50**. Preferably, the gripping portion **59** includes a gripping surface **59***a* such as knurlings. Alternatively, the gripping portion **59** may include an ergonomic handle having cut out portions sized to receive a surgeon's fingers.

The endosurgical elevator **60** shown in FIGS. **10–12** includes a thin, flat rounded working end **61**, a thin round, shaft **62**, and an ergonomic handle **63**. The working end **61** is configured to gently dissect muscle from fascia in the procedures of this invention. The working end **61** in one specific embodiment is 0.8 cm×2.0 cm. The handle **63** is

provided with cut-out portions **64** which are sized and shaped to accommodate the surgeon's fingers to facilitate gripping and manipulating the elevator **60**. Preferably, the handle **63** also includes a gripping surface **63***a* such as knurlings. The shaft **62** also includes a bent region **65** or a pair of bends each forming an angle α_5 and α_6 of at least 90 degrees and preferably about 135 degrees. The elevator **50** is configured to fit into the channel **10** without the surgeon's hands blocking the working area. Most preferably the bent region **65** is provided with a concave finger pusher **66** shown in detail in FIG. **12**B. The finger pusher **66** is configured to allow the surgeon to apply manual pressure for elevating tissue and directing the working end **61** of the instrument **60**.

A self-retaining endosurgical speculum **90** is also provided and is depicted in FIGS. **15** and **16**. The speculum **90** includes two curved elongated working arms **91**, **92** attached at a pivot point **93** with a fastener **94**. The speculum also includes means for varying and securing the distance between the working ends **95**, **96** of the arms **91**, **92**. In one embodiment, the means includes a leaf spring closure mechanism **98** bearing against a rachet retention bar **97**. The arms **91**, **92** of speculum **90** each include a bend **99** which has an angle α_6 of between about 80 degrees and 120 degrees. The bend **99**, preferably about 110 degrees, is configured to allow the surgeon to comfortably operate the speculum and to keep the opposite end of the speculum **90** away from the incision so that the speculum **90** does not block vision or operation in the incision. In a specific embodiment, the working arms are 12 cm in length, with rounded, fluted ends, tapered to 1 cm in width.

Any suitable endoscope or other viewing device is contemplated for use in various steps of the inventive procedures. The device **100** depicted in FIGS. **17** and **18** includes an eye piece **101**, a fiber optic light connector **102**, a rod lens **103**, a sheath **105** and a Luer Lock® connector. The rod lens **103** is preferably no longer than about 15 cm and is most preferably about 10 cm. Preferably the viewing angle α_8 is at least about 30 degrees. The tip **107** of the sheath **105** preferably extends beyond the tip **104** of lens **103***a* distance of L_2 to protect the device from tissue fluid soiling.

An endosurgical graft delivery assembly is shown in FIGS. **20** and **21** and includes an endosurgical graft delivery device **110** and a graft delivery piston **120**. The graft delivery device includes a delivery cannula **111**, a handle portion **112** and an opening **113** for receiving graft material into the cannula **111**. Preferably, the opening **113** is surrounded by a funnel **114**. Also, preferably the handle portion **112** includes a handle **115** with cut out portions **116** for a surgeon's fingers. In one embodiment the device **110** includes a 1.0 cm I.D. thin wall cannula, 15 cm in length. The funnel **114** is conical with a minor diameter of 1.0 cm and a major diameter =3.0 cm, length =2.0 cm) and an ergonomic handle. A graft delivery piston **120** (FIG. **21**) is provided which is insertable within the cannula **111** for ejecting graft material from the cannula **111** and into the fusion site. The piston **120** is long enough to fully eject the graft material from the cannula **111** and preferably includes a knurled gripping portion **121**. In one embodiment where the cannula **111** is about 15 cm, the piston **120** is about 30 cm in length.

A blunt probe **160** depicted in FIG. **23** is sized and configured to be accepted through a small donor incision for obtaining autograft. The probe **160** includes a small diameter rod **161** having a first portion **162** and a second portion **163**. A smoothly tapered working end **164** is attached to the first portion **162** and a gripping portion **165** is attached to the second portion **163** of the rod **161**. In a preferred embodiment the probe **160** includes a stop member **166** between the first **162** and second **163** portions for preventing the probe **60** from being inserted too deeply. The gripping portion **165** preferably includes a ball handle **167** which is configured to facilitate gripping and manipulating the device. In one specific embodiment, the probe **160** is a 0.3 cm diameter rod **161**, with a first portion having a length of about 10 cm and a second portion having a length of about 7 cm and a ball handle **167** having a diameter d_2 of about 4 cm.

The following specific examples are provided for purposes of illustrating the invention, and no limitations on the invention are intended thereby.

EXAMPLES

Rabbit Model

Methods

Seven New Zealand white rabbits were examined at necropsy and during non-survival surgeries to determine the most convenient and safest access routes and to develop special instruments for video-assisted (VA) lateral intertransverse process arthrodesis.

Thirty-eight male skeletally nature (⅘–5kg) New Zealand white rabbits underwent L4–L5 intertransverse process arthrodesis. The rabbits were divided into three groups: The "OPEN" group (n=16) underwent a standard open muscle-splitting approach using rhBMP-2/collagen as a bone graft substitute; the "VA-Control" group (N=6) underwent video-assisted lateral intertransverse process arthrodesis with the collagen implalt only (no growth factor); and the "VA-BMP" group (n=16) underwent VA lateral intertransverse process arthrodesis with rhBMP-2/collagen as the graft material.

The open group received open dissection of the intertransverse interval for the purpose of graft material deposition. A single midline incision was made over the lumbosacral spine. Paraspinal muscles were elevated on each side to expose the transverse processes and the intertransverse membrane. The bone was decorticated with a high-speed burr. The wound was irrigated, graft material is placed in the intertransverse intervals and the wound is closed. The graft material included a bovine type 1 collagen sponge carrier (Genetics Institute, Cambridge, Mass.) was inserted as five rectangular pieces (15×30 mm each) for a total implant volume of 24 cc per fusion side. In the VA-BMP group, the collagen sponge was impregnated with 0.24 mg/fusion side of rhBMP-2 (Genetics Institute, Cambridge, Mass.). The BMP and carrier was delivered to the intertransverse interval using a 5 mm tube and plunger.

Both the VA-Control and VA-BMP groups received endosurgical dissection for the purpose of graft-substitute deposition. A small incision was made at the lateral border of the paraspinal muscles at the dorsal border of the external oblique muscle. A modified Love nerve root retractor was inserted into the compartment of the fascia, deep to the paraspinal muscles to create a working space for video assisted endoscopic visualization. A periosteal elevator was used to expose the transverse processes. An accessory portal was created for the decotication and graft insertion.

A bovine type 1 collagen sponge carrier (Genetics Institute, Cambridge, Mass.) was inserted as five rectangular pieces (15×30 mm each) for a total implant volume of 2.4 cc per fusion side. In the VA-BMP group, the collagen sponge was impregnated with 0.24 mg/fusion side of rhBMP-2 (Genetics Institute, Cambridge, Mass.). The BMP and carrier was delivered to the intertransverse interval using a 5 mm tube and plunger. After decortication of the exposed bone and the delivery of graft material, the wounds were closed. The procedure was repeated on the opposite side.

The animals were housed without restraint for ten weeks before examination. All animals were monitored daily for signs of neurologic impairment, infection, and general behavior.

Results

An expedient and neurovascularly safe, minimally invasive route to the intertransverse process interval was identified which was an intermuscular approach between the longissimus and multifidus muscles for the rabbit. All 32 rabbits in the OPEN and VA-BMP groups achieved solid intertransverse process lumbar fusions when blindly assessed at ten weeks by manual palpation, posteroanterior radiographs, computed tomography, and undecalcified histology. There were no neurological impairments nor any statistically significant difference between the two groups in frequency of postoperative infection or other complications. None of the animals in the VA-Control group showed evidence of intertransverse process fusion.

TABLE I

Results of Video-Assisted Lateral Intertransverse Process Arthrodesis Using a Minimally Invasive Fusion Technique in the Rabbit Model.

Group[1]	Surgical Technique	Graft Material[2]	Fusions[3]
Open	Standard Open	Carrier + 0.24 mg BMP	16/16
VA-Control	Endo-surgical	Carrier alone	0/6
VA-BMP	Endo-surgical	Carrier + 0.24 mg BMP	16/16

[1]The "OPEN" group (n = 16) underwent a standard open muscle-splitting approach using rhBMP-2/collagen as a bone graft substitute; the "VA-Control" group (N = 6) underwent video-assisted lateral intertransverse process arthrodesis with rhBMP-2/collagen as the graft material.
[2]A bovine type 1 collagen sponge carrier (Genetics Institute, Cambridge Ma) was inserted as five rectangular pieces (15 × 30 mm each) for a total implant volume of ¾ cc per fusion side. In the Open and VA-BMP groups, the collagen sponge was impregnated with 0.24 mg/fusion side of rhBMP-2 (Genetics Institute, Cambridge Ma).
[3]Fusions blindly assessed at 10 weeks by manual palpation, posteroanterior radiographs, computed tomography and undecalcified histology.

Rhesus Monkey Model (Collagen Carrier)

Methods

Five rhesus monkeys were examined at necropsy and during non-survival surgeries to determine the most convenient and safest access routes and to develop special instruments for video-assisted (VA) lateral intertransverse process arthrodesis. Rhesus monkeys (n=4) underwent video-assisted lateral intertransverse process arthrodesis using rhBMP-2/collagen (32 mg/fusion side) following laminectomy of L4-5. All animals were monitored daily for signs of neurologic impairment, infection, and general behavior.

Results

Again, an expedient and neurovascularly safe, minimally invasive route to the intertransverse process interval was identified which was a lateral, extramuscular approach around the iliocostalis muscle for the rhesus monkey.

Exposure, decortication and grafting with rhBMP-2/collagen was successfully accomplished in all 4 monkeys through the minimally invasive approach (VA) without complication. Postoperative recovery was felt to be more rapid than previously observed in rhesus monkeys after the same procedures were performed through a conventional open surgical approach.

Rhesus Monkey Model (Ceramic Carrier)

Methods

Five rhesus monkeys were examined at necropsy and during non-survival surgeries to determine the most convenient and safest access routes and to develop special instruments for video-assisted (VA) lateral intertransverse process arthrodesis. Rhesus monkeys (n=5) underwent video-assisted lateral intertransverse process arthrodesis using rhBMP-2 (9 mg/fusion side) in a Hydroxyapatite/Tricalcium phosphate ceramic carrier (12 mm×12 mm×40 mm) following laminectomy of L4–5. All animals were monitored daily for signs of neurologic impairment, infection, and general behavior.

Results

Again, an expedient and neurovascularly safe, minimally invasive route to the intertransverse process interval was identified which was a lateral, extramuscular approach around the iliocostalis muscle for the rhesus monkey.

Exposure, decortication and grafting with rhBMP-2-HA/TCP was successfully accomplished in all 5 monkeys through the minimally invasive approach (VA) without complication. Postoperative recovery was felt to be more rapid than previously observed in rhesus monkeys after the same procedures were performed through a conventional open surgical approach.

Discussion

The results of the rabbit and monkey tests show that the endo-surgical technique is equivalent or superior to open dissection for lumbar spine fusion as measured by solid fusion.

Cadaver Surgeries

A midline decompressive lumbar laminectomy was performed using conventional methods. After closure of the midline skin incision, a bilateral video assisted lateral intertransverse process arthrodesis was conducted through 2.5 cm transverse skin incisions centered over the lateral border of the paraspinal muscles. The thoraco-lumbar fascia was incised in the line of its fibers to expose the iliocostalis muscle. The 2 cm main working portal was established between the iliocostalis and the anterior layer of the thoraco-lumbar fascia where the tips of the target transverse processes were palpable. The attachments of the longissimus were separated from the thoraco-lumbar fascia in this case using the freer dissector. Periosteal elevation exposed each transverse processes in turn.

An accessory portal was established cephalad to the primary portal using a blunt probe. The sheath of the decorticating burr was introduced through the accessory portal over the blunt probe. With the burr in place and attached to a motorized hand piece, the transverse processes were decorticated in turn. In some cases, the decorticating burr was introduced through the primary wound along side the endoscope.

The graft material consisted of three sheets on collagen sponge impregnated with recombinant human bone morphogenetic protein 2 in a neutral buffered solution. The sheets of collagen sponge were allowed to stand for about 5 minutes and then stacked and rolled to expel excess liquid. The rolled cylinder of graft material was placed in a 1.2 cm plastic delivery cannula. The delivery cannula was inserted to the medial wall of the intertransverse process interval and the graft material was impelled into the wound using a Delrin rod. The growth factor impregnated collagen sponges were then distributed between the decorticated transverse processes to bridge the intertransverse process interval. The wounds were then closed with absorbable sutures and rein-

forcing skin staples. The entire procedure was completed within thirty minutes.

Human Surgeries

A midline decompressive lumbar laminectomy using conventional methods is performed on an anesthetized patient. After closure of the midline skin incision, a bilateral video assisted lateral intertransverse process arthrodesis is performed through 2.5 cm transverse skin incisions centered over the lateral border of the paraspinal muscles. The thoraco-lumbar fascia is incised in the line of its fibers to expose the iliocostalis muscle. A 2 cm main working portal is established between the iliocostalis and the anterior layer of the thoraco-lumbar fascia where the tips of the target transverse processes are palpable. The attachments of the longissimus are separated from the thoraco-lumbar fascia. Periosteal elevation exposed each transverse processes in turn. An accessory portal is established through a secondary incision cephalad to the primary portal using a blunt probe. The sheath of the decorticating burr is introduced through the accessory portal over the blunt probe. With the burr in place and attached to a motorized hand piece, the transverse processes are decorticated in turn. In some cases, the decorticating burr is introduced through the primary wound next to the endoscope.

The delivery cannula of a graft delivery assembly is loaded with graft material. The graft material is a biphasic hydroxyapatite/tricalcium phosphate ceramic block (1.4 cm×1.2 cm×4.0 cm) soaked with rh-BMP-2. The delivery cannula is inserted to the medial wall of the intertransverse process interval and the graft material is impelled into the fusion site using a graft delivery piston. The wounds are then closed with absorbable sutures and reinforcing skin staples.

While the invention has been illustrated and described in detail in the drawings and foregoing description, the same is to be considered as illustrative and not restrictive in character, it being understood that only the preferred embodiments have been shown and described and that all changes and modifications that come within the spirit of the invention are desired to be protected. While the preferred embodiment discloses certain instruments, all suitable instruments are contemplated and others may even be preferred for use in the methods of this invention. For example, inserters are contemplated which accomodate different materials or configurations of the implant. A collagen sponge may require a different inserter than autograft.

In one specific example, an inserter **200** particularly suited for a ceramic implant is depicted in FIG. **29** A–D. It is contemplated that this inserter **200** will compensate for the difficulty in insertion of certain bioceramics due to the brittleness of the material. The inserter shown in FIG. **29** includes a carrier element **205** and an obturator portion **210**.

The carrier element **205** includes a handle **206** and a sheath **207**, each connected to opposite ends **208***a*, **208***b* of a delivery shaft **208**. The sheath **207** is configured to hold and protect an implant G, in particular a ceramic implant, during the insertion process. The sheath **207** also protects the intervening tissue from irritation as the implant passes to its destination. The sheath **207** preferably includes two side walls **203** connected by a seat **202** which defines an opening **204** for insertion of a portion of the obturator **210** for ejection of the implant G. The sheath **207** and the second end **208***b* of the shaft **208** preferably form an angle of about 90 degrees which properly orients the implant G for insertion at the fusion site. Referring to FIG. **29**C, the obturator portion **210** includes a gripping portion **211** and an impacter **212**. The impactor **212** includes an engaging surface **214** for engaging graft material or the implant G received within the sheath **207**. The impactor **212** is sized to fit through the opening **214** of the carrier element **205** and eject the implant G from the sheath **207** as shown in FIG. **29**D. The shaft **208** defines a narrowed portion **209** at one end **208***b* which provides space for the impactor **212** as the obturator portion **210** is assembled with the carrier element **205**.

Although the inserter **200** is particularly suited to deliver ceramic graft materials to the intertransverse interval T according to the methods of this invention, the inserter **200** could be used in virtually any procedure where delivery of graft or graft substitutes is required.

Another example of the modifications which this invention includes is shown in FIG. **30** which depict a substantially U-shaped endosurgical retractor **250**. The retractor **250** includes a retraction portion **251**, a curved shaft **256** and a gripping portion **259**. The retraction portion **251** of this embodiment is identical to the retraction portion **51** of the retractor **50** shown in FIGS. **8** and **9**. The gripping portion **259** preferably includes an ergonomic handle having cut out portions **259***a* sized to receive a surgeon's fingers.

The curved shaft **256** of the retractor **250** includes a proximal end **257** attached to the gripping portion **259** and a distal end **258** attached to the second end **253** of the retraction portion **251**. The shaft **56** includes a bend **256***a* defining an arc subtending an angle α_{10} of at least about 120 degrees. In a most preferred embodiment, the angle α_{10} is about 160 degrees. One purpose of the bend **256***a* can be appreciated with reference to FIG. **3**. In particular, the bend **256***a* allows the retraction portion **251** to be inserted into the channel **10** with the handle portion **259** outside the body and projecting conveniently posterior to the patient.

Therefore it will be understood by those of ordinary skill in the art that the methods of this invention can be accomplished with any suitable devices and that all variations which come within the scope of the following claims are desired to be protected.

What is claimed is:

1. A minimally invasive method for arthrodesis of a spinal motion segment of a patient including a cephalad vertebra and a caudal vertebra, comprising the steps of:

making a transverse incision in the skin of the patient of about 2.5 cm at a generally posterolateral location about 10 cm from the midline at the level of a spinous process of the cephalad vertebra and centered over the border of the reflection of the thoracolumbar fascia;

exposing the posterior leaf of the thoracolumbar fascia beneath the skin;

making a second incision of about 2.5 cm through the thoracolumbar fascia in the direction of the fibers of the thoracolumbar fascia, the second incision centered beneath the transverse incision;

creating a channel through the transverse incision and the second incision to the intertransverse interval of the cephalad vertebra and the caudal vertebra, including

dissecting the lateral border of the iliocostalis lumborum from the anterior leaf of the thoracolumbar fascia;

dissecting the iliocostalis lumborum and longissimus thoracis muscles from the fascia medially about 0.5 cm dorsal to the junction of the transverse process and the lateral cortex of the cephalad articular facet; and

medially dissecting the intertransverse process membrane to the hiatus of the posterior rami of the segmental nerve and vessels;

inserting a probe through the channel to the intertransverse interval;

inserting a cannula into the channel and over the probe to the intertransverse interval;

removing the probe from the cannula;

inserting a burr into the cannula;

decorticating the transverse process of the caudal vertebra with the burr;

decorticating the transverse process of the cephalad vertebra with the burr; and

delivering graft material to the intertransverse interval after the decorticating steps.

2. The method of claim **1**, further comprising inserting an endoscope into the channel for visualization.

3. The method of claim **1**, further comprising:

establishing an accessory portal intersecting the channel.

4. The method of claim **3** wherein the portal is established through the longissimus thoracis muscle.

5. The method of claim **3** wherein the portal has a diameter of about 0.5 cm.

6. The method of claim **3**, further comprising inserting an endoscope into the accessory portal for visualization of the intertransverse interval.

7. The method of **3**, further comprising inserting a burr into the accessory portal for decorticating a transverse process.

8. The method of claim **1** wherein the graft material is autograft, allograft, xenograft, a synthetic bone graft substitute, or a bone morphogenetic protein in a suitable carrier.

9. The method of claim **8** wherein the bone morphogenetic protein is a recombinant human bone morphogenetic protein.

10. The method of claim **9** wherein the carrier includes collagen.

11. The method of claim **9** wherein the carrier is a biphasic calcium phosphate ceramic.

12. The method of claim **11** wherein the carrier includes hydroxyapatite and tricalcium phosphate.

13. A minimally invasive method for arthrodesis of a spinal motion segment of a patient including a cephalad vertebra and a caudal vertebra, comprising the steps of:

making a first incision through the patient's skin at the level of the spinous process of one of the cephalad or the caudal vertebrae and centered over the border of the reflection of the thoracolumbar fascia;

making a second incision beneath the first incision and through the thoracolumbar fascia to expose the iliocostalis lumborum muscle;

inserting a tool through the incisions and dissecting the lateral border of the iliocostalis from the anterior leaf of the thoracolumbar fascia to create a first portion of a channel between the lateral border of the iliocostalis and the fascia;

dissecting the fascia through the incisions and from the anterior border of the iliocostalis and the anterior border of the longissimus thoracis muscles to create a second portion of the channel between the fascia and the anterior borders;

inserting a cannula through the first and second portions of the channel to the intertransverse interval between the cephalad and caudal vertebrae; and

delivering graft material to the intertransverse interval through the cannula.

14. The method of claim **13**, further comprising:

inserting a burr through the channel to the intertransverse interval;

decorticating bone at the intertransverse interval; and

removing the burr.

15. The method of claim **13**, further comprising inserting an endoscope into the channel for visualization.

16. The method of claim **13**, further comprising:

establishing an accessory portal intersecting the channel.

17. The method of claim **16**, further comprising inserting an endoscope into the accessory portal for visualization of the intertransverse interval.

18. The method of **16**, further comprising inserting a burr into the accessory portal for decorticating a transverse process.

19. The method of claim **18** wherein the second incision is made in the direction of the fibers of the fascia.

* * * * *