A-3

US005108404A

United States Patent [19]

Scholten et al.

[11] Patent Number: 5,108,404

[45] Date of Patent: * Apr. 28, 1992

[54] SURGICAL PROTOCOL FOR FIXATION OF BONE USING INFLATABLE DEVICE

[76] Inventors: Arie Scholten, 4175 Tamayo St., Fremont, Calif. 94536; Mark A. Reiley, 333 63rd St., Oakland, Calif. 94618

[*] Notice: The portion of the term of this patent subsequent to Nov. 13, 2007 has been disclaimed.

[21] Appl. No.: 567,862

[22] Filed: Aug. 15, 1990

Related U.S. Application Data

[63] Continuation-in-part of Ser. No. 308,724, Feb. 9, 1989, Pat. No. 4,969,888.

[51] Int. Cl.[5] A61B 17/56

[52] U.S. Cl. 606/94; 606/60; 606/95

[58] Field of Search 606/60, 94, 95, 191, 606/192, 193, 194

[56] References Cited

U.S. PATENT DOCUMENTS

1,965,653	7/1934	Kennedy	606/192
3,112,743	12/1963	Cochran et al.	128/92 VP
3,889,665	6/1975	Ling et al.	128/92 VP X
4,462,394	7/1984	Jacobs	128/92 VP
4,488,549	12/1984	Lee et al.	128/92 VP
4,627,434	12/1986	Murray	128/92 VP
4,714,478	12/1987	Fischer	623/23

FOREIGN PATENT DOCUMENTS

15864	10/1912	France	606/192 X
512456	9/1939	United Kingdom	606/192

OTHER PUBLICATIONS

Howmedica Exeter Pressurizer, 1979, 2 pages.

Journal of B & J Surgery, pp. 1665–1676, vol. 54A, #8, Dec. 1972.

Primary Examiner—Robert A. Hafer

Assistant Examiner—Kevin G. Rooney

Attorney, Agent, or Firm—Townsend and Townsend

[57] ABSTRACT

A method and apparatus for the fixation of osteoporotic and non-osteoporotic bones and especially vertebral body compression fractures, Colles' fractures and fractures of the proximal humerus. The method of the present invention includes a series of steps including penetrating the bone having the fracture with a guide pin, drilling the bone marrow of the bone to enlarge the cavity to be treated, following which a bone specific inflatable device is inserted in the cavity and inflated. The expansion of the device causes a compacting of the bone marrow against the inner surface of the outer wall of the bone to be treated to further enlarge the cavity. When this occurs, a flowable synthetic bone material or methyl methacrylate cement is directed into the cavity and allowed to set to a hardened condition. Following this, the instruments are removed. In the fixation of vertebral body fractures, an elliptical inflatable device is first used to initiate the compacting of the bone marrow, following which a substantially cylindrical inflatable device is inserted into the cavity to further compact the bone marrow in all directions. In the fixation of Colles' fractures and proximal humerus fractures, a gourd-shaped inflatable device is used to compact the bone marrow.

29 Claims, 11 Drawing Sheets

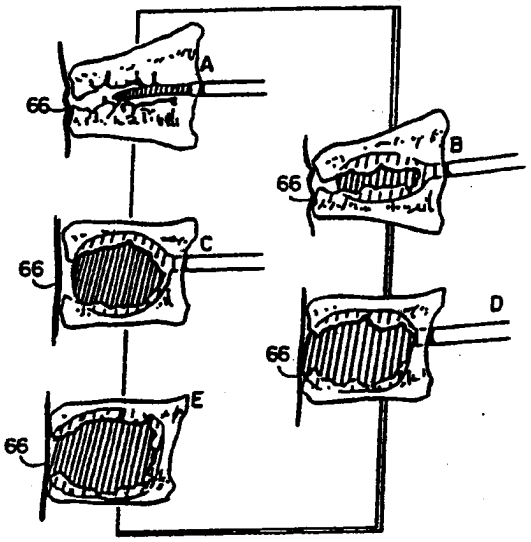

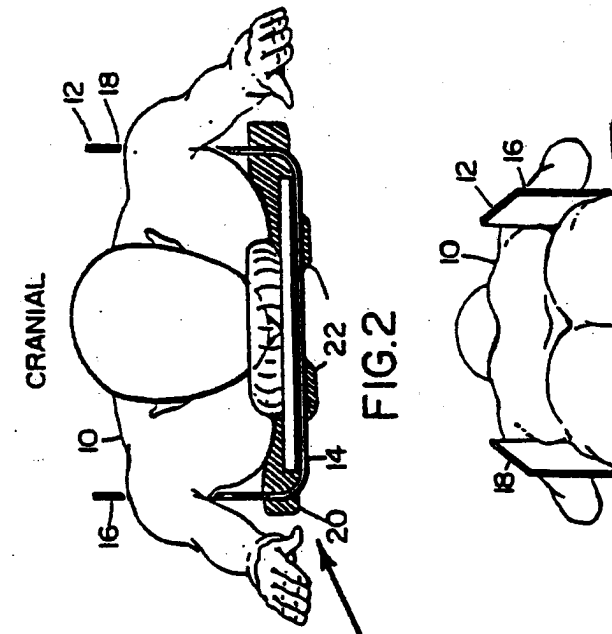

FIG.2

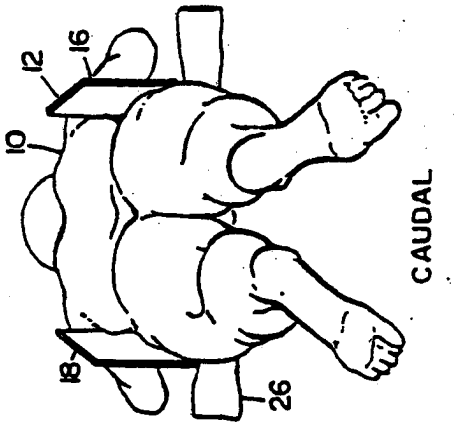

FIG.4

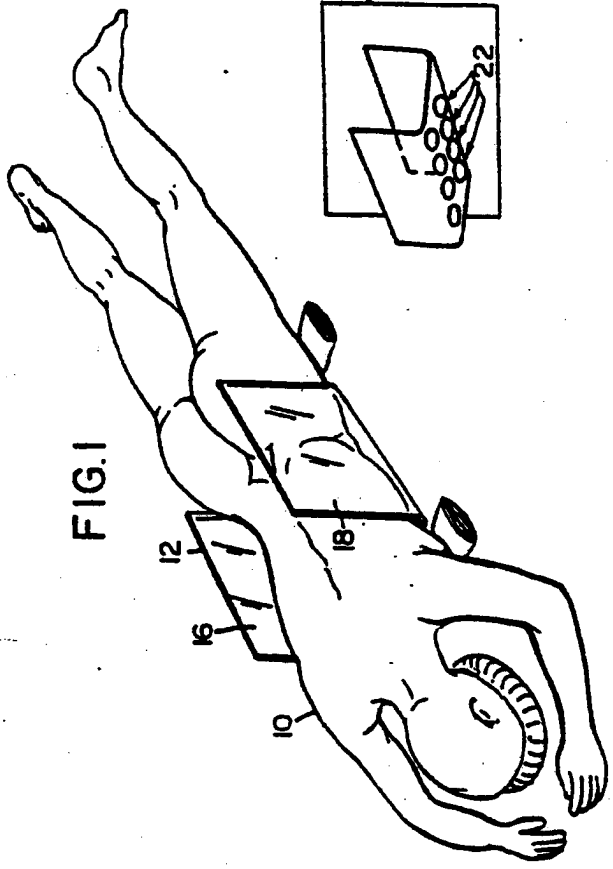

FIG.1



FIG.3

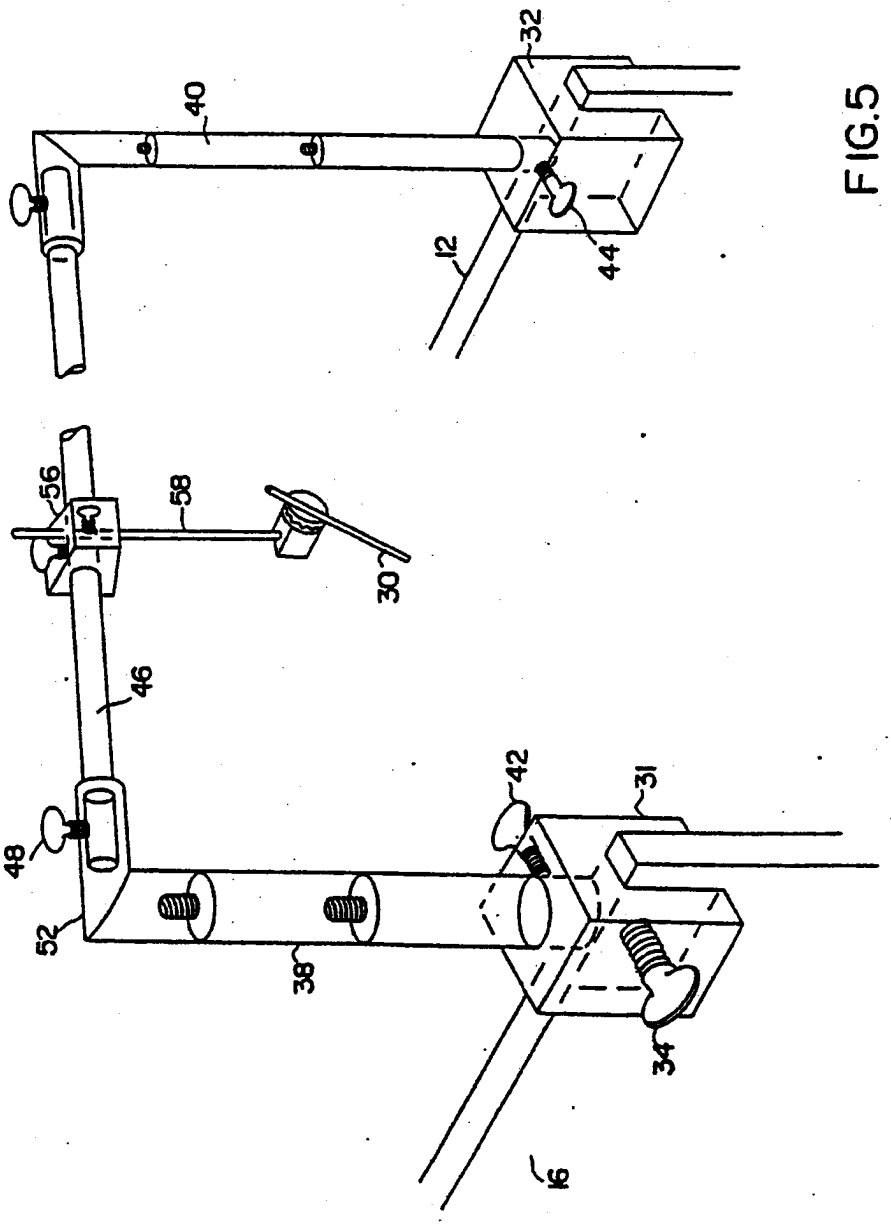

FIG.5

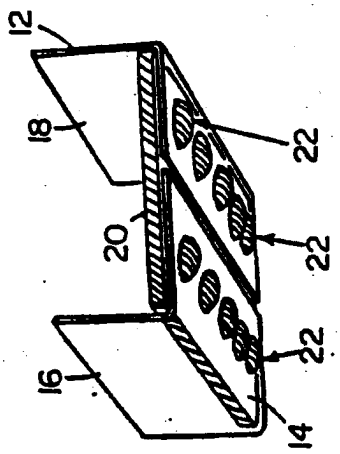

FIG.7

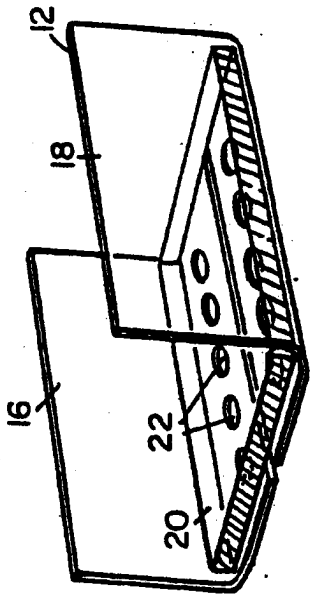

FIG.6

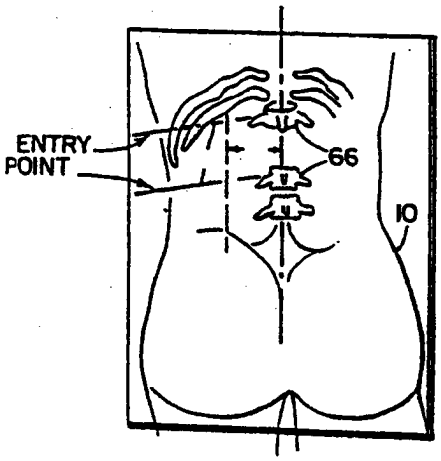

FIG.8

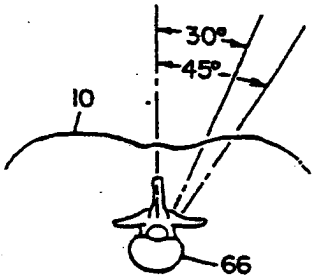

FIG.9

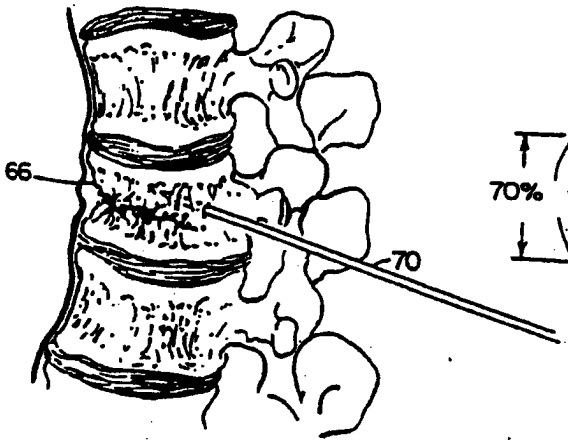

FIG.10

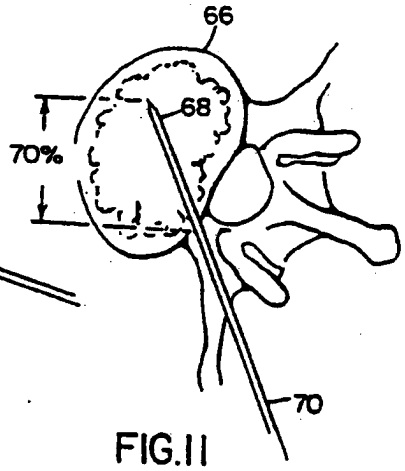

FIG.11

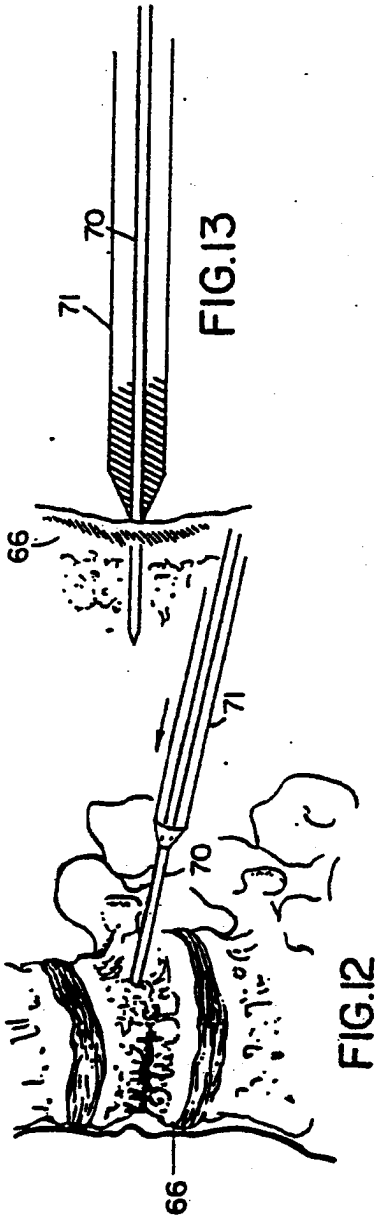

FIG.13

FIG.12

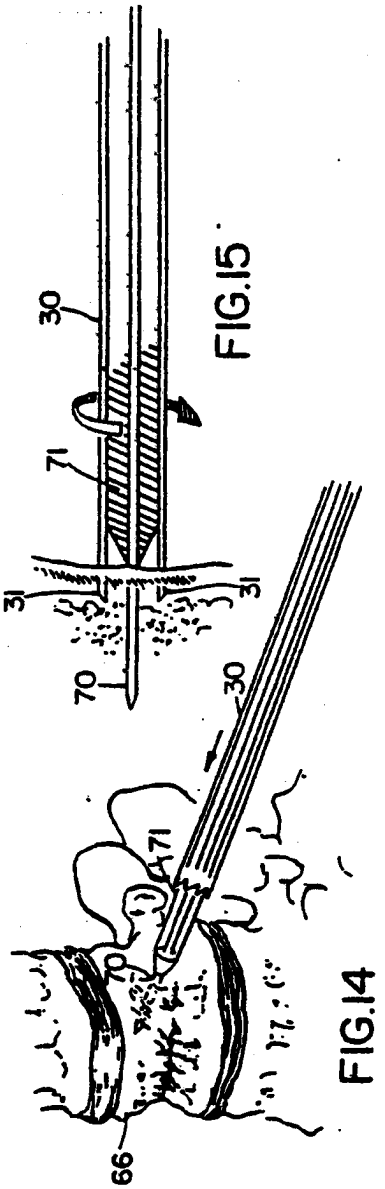

FIG.15

FIG.14

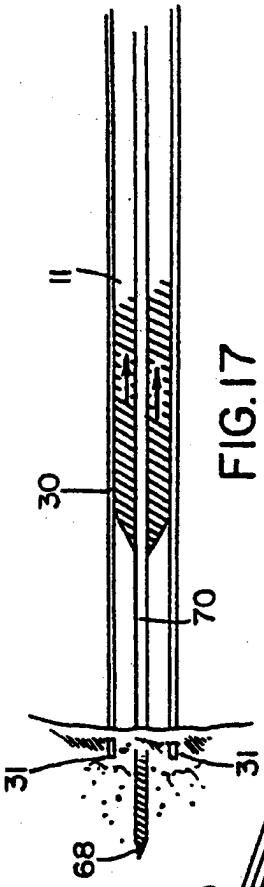

FIG.17

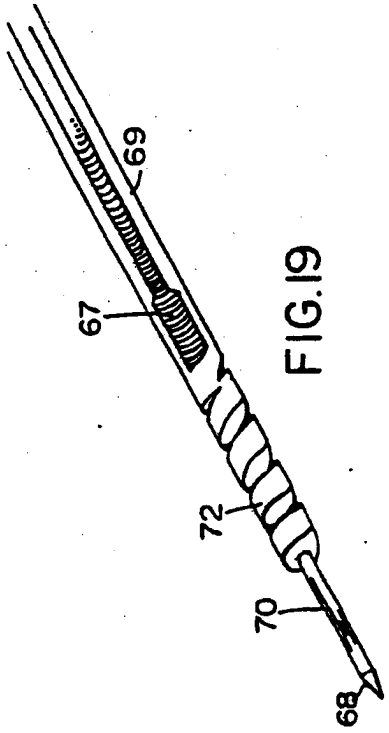

FIG.19

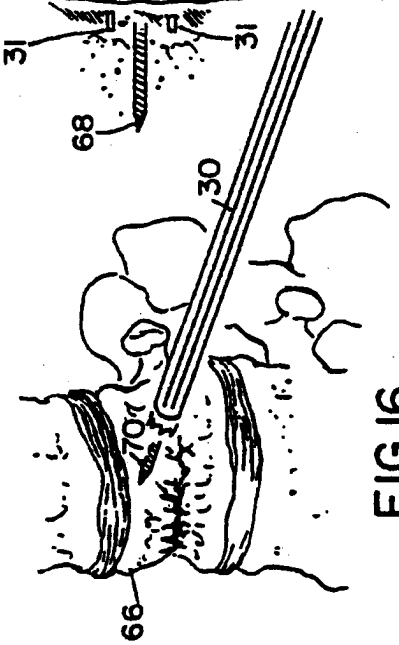

FIG.16

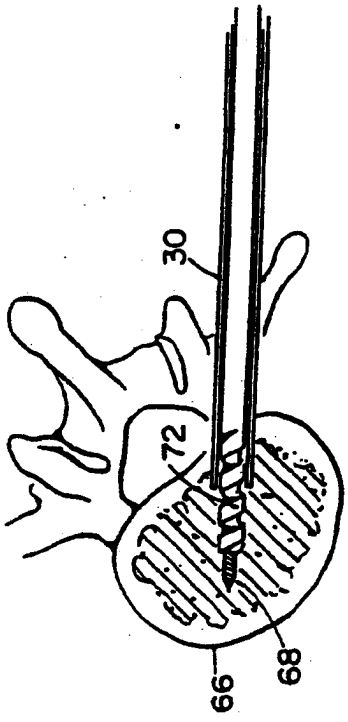

FIG.18

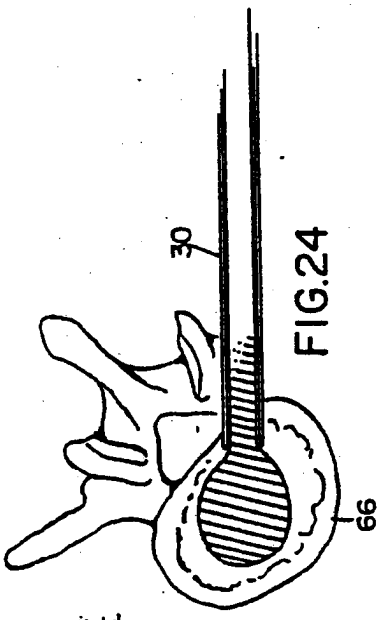

FIG.24

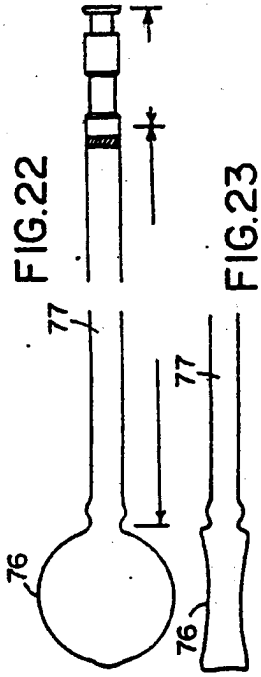

FIG.22 FIG.23

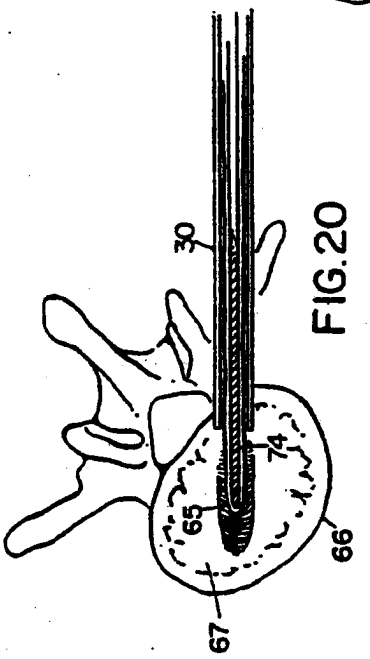

FIG.20

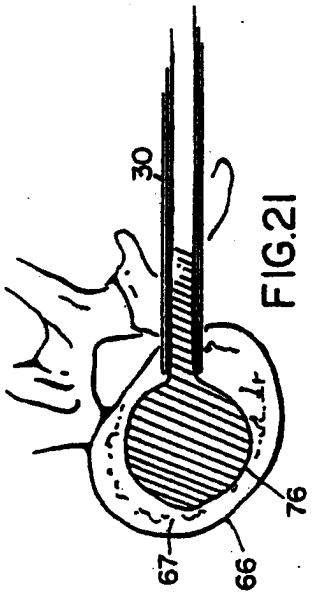

FIG.21

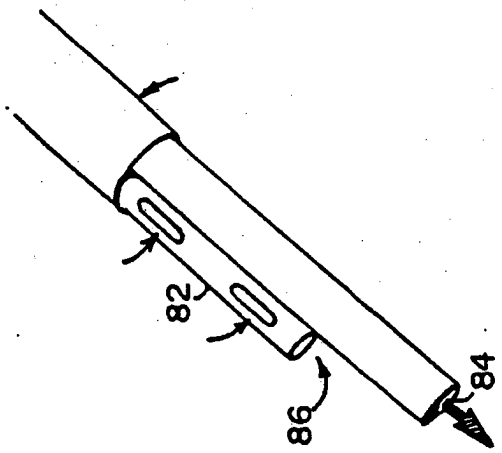

FIG.26

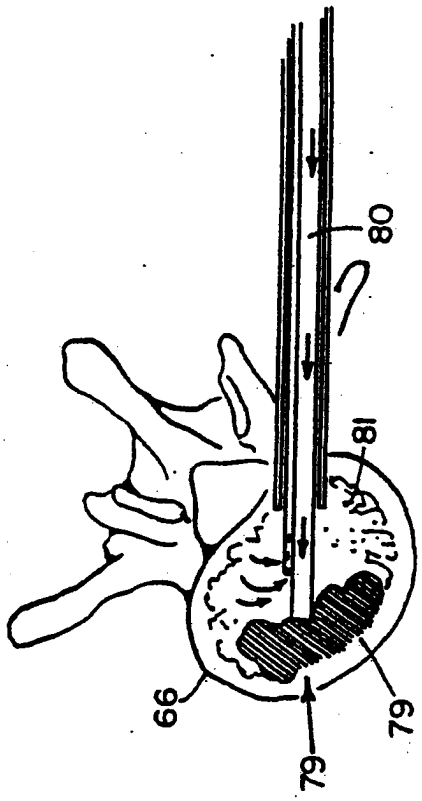

FIG.25

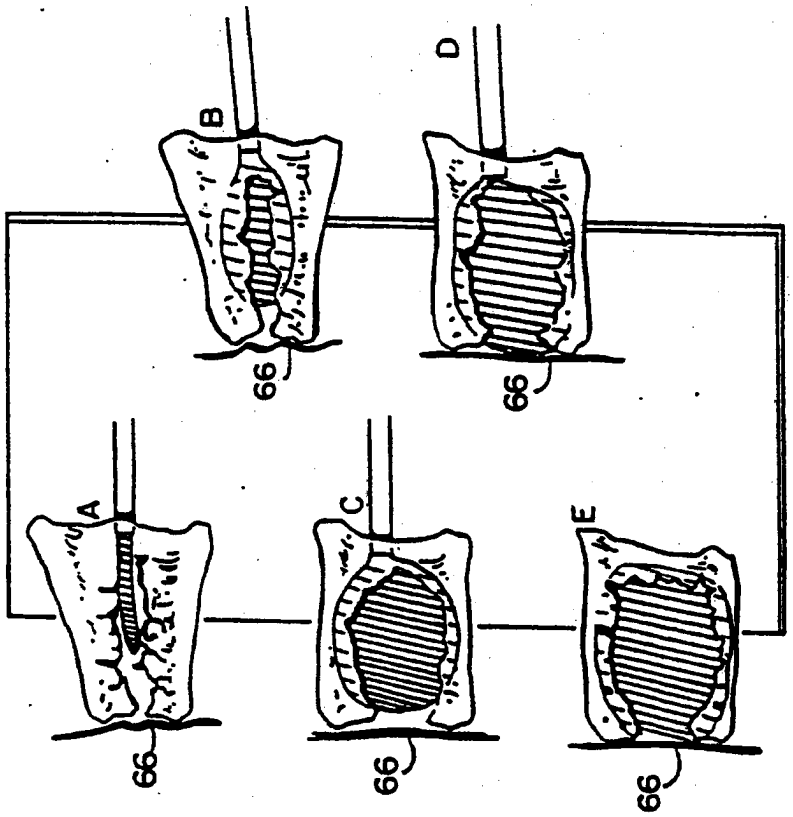

FIG.28

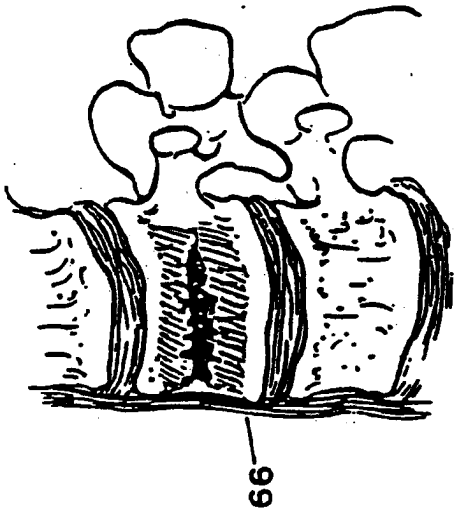

FIG27

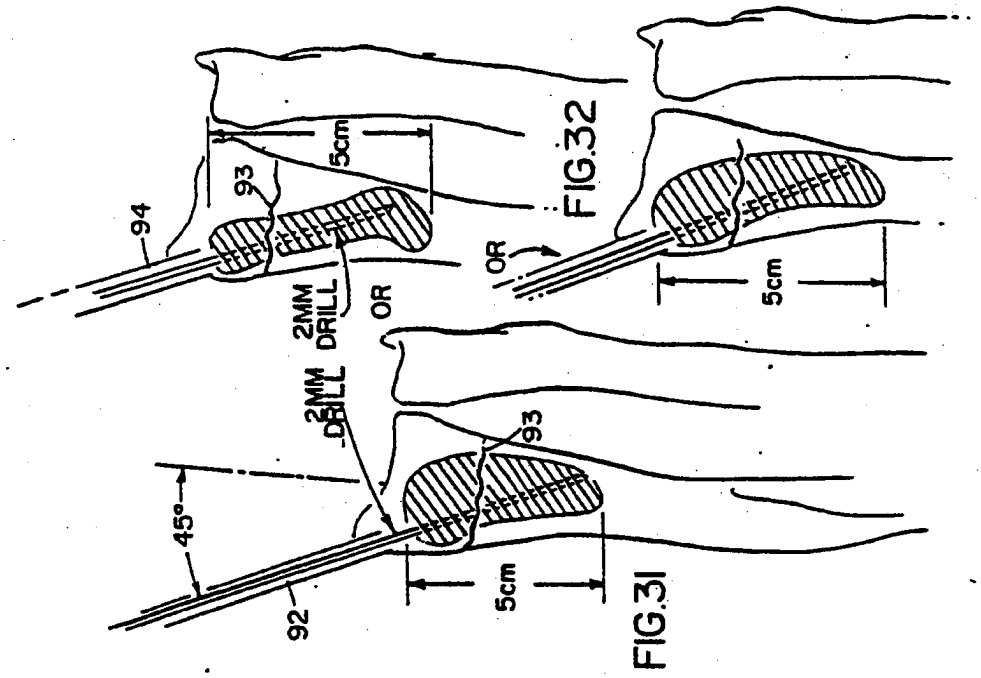

FIG.32

FIG.31

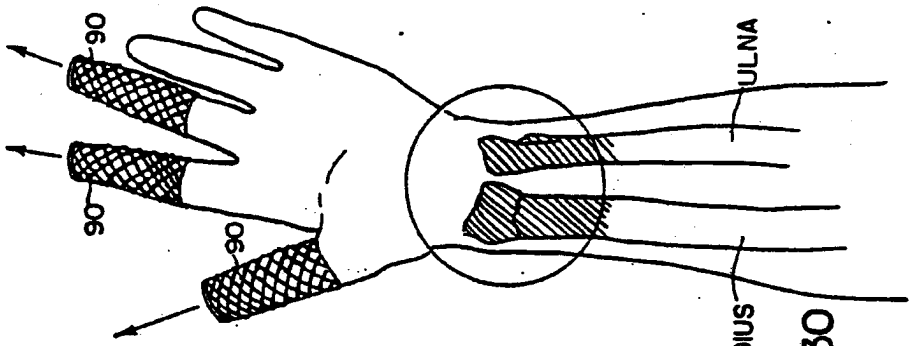

FIG.30

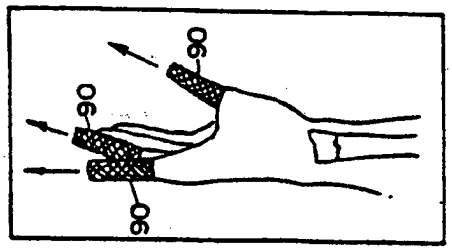

FIG.29

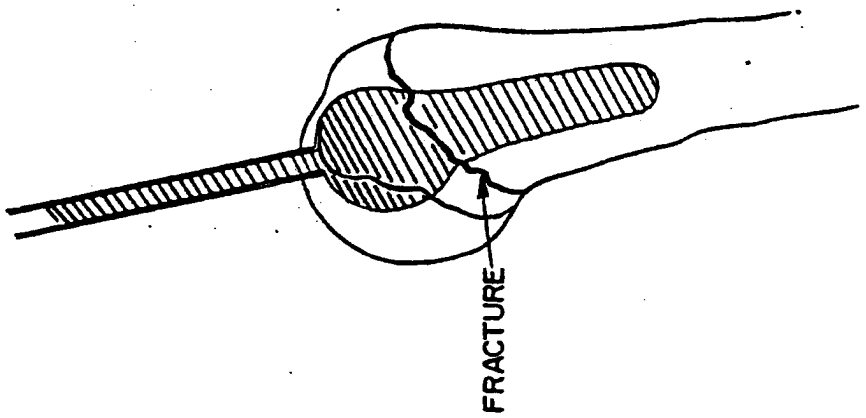

FIG.34

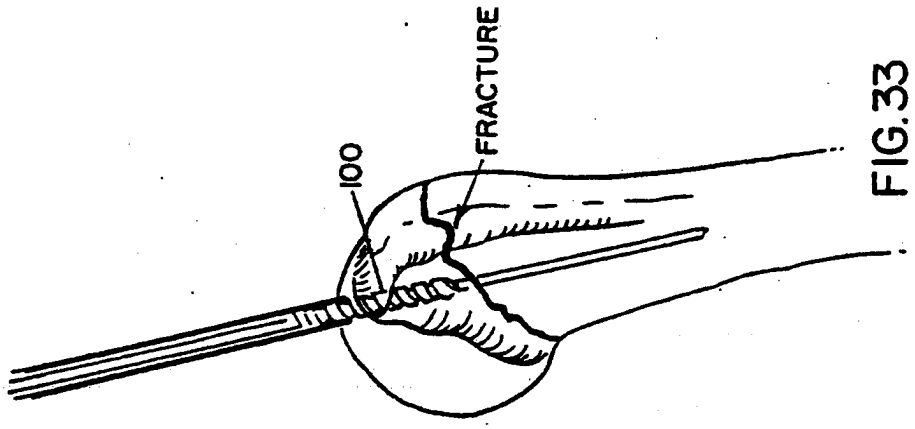

FIG.33

SURGICAL PROTOCOL FOR FIXATION OF BONE USING INFLATABLE DEVICE

This is a continuation-in-part application of application Ser. No. 07/308,724, filed Feb. 9, 1989, entitled "Surgical Protocol for Fixation of Osteoporotic Bone Using Inflatable Device," now U.S. Pat. No. 4,969,888.

This invention relates to improvements in the surgical treatment of bone conditions of the human and other animal body systems and, more particularly, to a method and apparatus for use in correcting such conditions.

BACKGROUND OF THE INVENTION

Every year in the United States there occurs over 1.2 million bone fractures of osteoporotic bone. Over nine hundred thousand (900,000) of those fractures occur in bones which can be treated with the percutaneous balloon technology of the present invention which includes instant fixation by methyl methacrylate cement or with liquid artificial bone substitutes. Those fractures which can be treated by the method and apparatus of the present invention are distal radius fractures, the proximal humerus fractures, the vertebral body compression fractures, and fractures of other long bones.

Osteoporotic and non-osteoporotic vertebral body compression fractures are currently treated with bed rest, analgesics, and intravenous hydration during the first week after onset of the problem. These steps are followed by the prescription of a soft or firm spinal corset, depending upon the physician's preference. In most cases, the corset is not worn because the patient suffers much discomfort and oftentimes greater discomfort than that due to the fracture of the vertebral body. The fracture pain lasts from two to eight months. In many cases, patients with vertebral body collapse fractures require about one week in an acute care hospital and two to three weeks in an extended care facility until they are able to move about independently and with only moderate pain. Current treatment does not substantially alter the conditions of the vertebral body.

The current management of shoulder fractures includes either long term immobilization in a sling, followed by lengthy physical therapy. If the fracture is in three or four parts, the fracture is treated with a shoulder hemiarthroplasty. Long term stiffness is the rule, following either treatment due to long term immobilization and/or extensive wound healing.

Colles' fractures of the wrist in the elderly are currently treated in three different ways: 1) they are treated with closed reduction and application of a short arm cast for one or more weeks; 2) they can be treated with a short arm cast without reduction; and 3) they may be treated with closed reduction and pins and plaster immobilization for eight weeks. All treatment modalities result in considerable stiffness and have frequent malunions of the fractures.

Because of the problems associated with the treatment of vertebral body fractures, Colles' fractures, shoulder fractures and other bone conditions similar thereto, a need has existed for a method and apparatus to improve on the protocol for treating such fractures such as shortening the time in which a patient suffers pain due to such fracture. The present invention provides apparatus and a method of percutaneous fracture fixation which satisfies this need.

SUMMARY OF THE INVENTION

This invention relates to a method and apparatus for the fixation of fractures of osteoporotic and non-osteoporotic bones. The invention is especially suitable for use in the fixation of osteoporotic vertebral body compression fractures, Colles' fractures and fractures of the proximal humerus. The method of the present invention includes a series of steps including forming an incision in the body and penetrating the bone having the fracture with instruments including a guide pin and a cannula, drilling the bone marrow of the bone to enlarge the cavity or passage to be treated, following which an inflatable device, such as an expandable balloon, is inserted in the cavity and inflated. The expansion of the balloon causes a compacting of the bone marrow against the inner surface of the outer cortical wall of the bone to be treated to further enlarge the cavity. Then, a flowable synthetic bone material or methyl methacrylate cement is directed into the cavity and allowed to set to a hardened condition. Following this, the instruments are removed and the incision in the skin is covered with a bandage.

In the fixation of vertebral body fractures, an elliptical inflatable device is first used, if needed, to initiate the compacting of the bone marrow and to commence the formation of a cavity or passage in the bone marrow, following which a larger inflatable device is inserted into the cavity to further compact the bone marrow in all directions. In the fixation of Colles' fractures and proximal humerus fractures, a gourd-shaped inflatable device is used to compact the bone marrow.

It is the intention of the present invention to provide, in each case of a fracture of osteoporotic or non-osteoporotic bone, an inflatable device that has a shape of or the ability to conform to the internal surface configuration of the cortical bone in which the device is used. Thus, the inner surface configuration of the cortical bone of a vertebral body is disk-shaped or checker-shaped, the cortical bone of distal radius is gourd-shaped and the cortical bone of the proximal humerus is also gourd-shaped.

BRIEF DESCRIPTION OF THE DRAWINGS

FIG. 1 is a perspective view of a patient about to undergo the surgical treatment of vertebral body fixation in accordance with the method of the present invention, the patient lying prone on a U-shaped holder;

FIG. 2 is a front elevational view of the patient on the holder;

FIG. 3 is a side elevational view of the patient, showing hyperextension of the spine of the patient;

FIG. 4 is a perspective view of the rear portion of the patient showing the patient lying between the sides of the holder;

FIG. 5 is a stabilizer bracket for a guide pin and a cannula forming parts of the apparatus for carrying out the method of the present invention;

FIG. 6 is a perspective view of the patient holder shown in FIGS. 1, 2 and 4;

FIG. 7 is another perspective view of the holder of FIG. 6 looking upwardly from the bottom thereof;

FIG. 8 is a top plan view of the portion of the patient showing several vertebral bodies of the patient and the way in which the a guide pin enters a patient for carrying out the method of the present invention;

FIG. 9 is a schematic front elevational view of the patient and a vertebral body of the patient showing the

entry angles of the guide pin of the apparatus of the present invention;

FIG. 10 is a side elevational view of the vertebrae, showing a guide pin inserted into one of the vertebral bodies;

FIG. 11 is a top plan view of the guide pin inserted into the vertebral body;

FIG. 12 is a perspective view of the guide pin placed within the vertebral body and a tissue expander sliding on the guide pin to the vertebral body;

FIG. 13 is a side elevational view of the tissue expander over the guide pin;

FIG. 14 is a view similar to FIG. 12 but showing a cannula carried by the tissue expander toward the vertebral body;

FIG. 15 is a view similar to FIG. 13 but showing teeth of the cannula embedded in the outer wall of the vertebral body;

FIG. 16 is a view similar to FIG. 14 but showing another view of the cannula embedded in the cortical wall of the vertebral body;

FIG. 17 is a view similar to FIG. 15 but showing the withdrawal of the tissue expander through the cannula;

FIG. 18 is a view similar to FIG. 11 but showing a drill guided into the vertebral body by the guide pin through the cannula;

FIG. 19 is an enlarged perspective view of the drill of FIG. 18;

FIG. 20 is a view similar to FIG. 18 but showing an elliptical inflatable device inserted into the vertebral body to expand the bone marrow in the vertebral body;

FIG. 21 is a checker-shaped inflatable device in the vertebral body to complete the expansion of the bone marrow in the vertebral body;

FIG. 22 is a top plan view of the checker-shaped inflatable device of FIG. 21;

FIG. 23 is a side elevational view of the checker-shaped inflatable device of FIG. 22;

FIG. 24 is a view similar to FIGS. 20 and 21 but showing the insertion of the inflatable device of FIG. 22 into a vertebral body;

FIG. 25 is a view similar to FIG. 24 but showing the insertion of a liquid artificial bone or methyl methacrylate cement into the vertebral body to replace the bone marrow;

FIG. 26 is an enlarged, fragmentary perspective view for directing liquid bone or methyl methacrylate cement into the vertebral body;

FIG. 27 is a side elevational view of the vertebral body after the liquid bone has been injected into the interior thereof;

FIG. 28A is a schematic side view of a vertebral body showing the initial insertion of an elliptical inflatable device in the vertebral body and before inflation of the device;

FIG. 28B is a view similar to FIG. 28A but showing partial inflation of the inflatable device of FIG. 28A to initiate a cavity or passage in the bone marrow of the vertebral body;

FIG. 28C is a view similar to FIG. 28B but showing a checker-shaped inflatable device in the vertebral body to further compact the bone marrow in the vertebral body;

FIG. 28D is a view similar to FIG. 28C but showing the initial injection stage in which liquid bone or methyl methacrylate cement is injected into the vertebral body;

FIG. 28E is a view similar to FIG. 28D but showing the vertebral body after the liquid bone or methyl methacrylate cement has set to a hardened condition;

FIG. 29 is a schematic top plan view of a distal radius fracture of the wrist, the fracture at the end of the radius being aligned with Chinese finger traps;

FIG. 30 is a view similar to FIG. 29 but looking in a different direction at the hand but illustrating the fracture;

FIG. 31 is a view of the fracture with the guide pin being inserted through the interface of the fracture;

FIG. 32 is a view similar to FIG. 31 but showing a drill in the radius, and the area to be filled with liquid bone or methyl methacrylate cement;

FIG. 33 is a side elevational view of a shoulder showing a fracture therein; and

FIG. 34 is a view similar to FIG. 33 but showing the bone fracture and cavity to be filled with liquid bone or methyl methacrylate cement.

DETAILED DESCRIPTION OF THE DRAWINGS

Percutaneous vertebral body fixation is indicated for all causes of spontaneous osteoporotic or non-osteoporotic vertebral body collapse fractures except those due to infection or neoplasia. The etiology of the bone marrow should be diagnosed prior to fixation. Concomitant endocrine therapy, chemotherapy or radiation is not contraindicated with percutaneous vertebral fracture fixation.

Impending vertebral body collapse as determined by the presence of previous collapse fractures and increased uptake on technetium-99 bone scan in a non-collapsed vertebral body. Various CT density values may eventually correlate with impending vertebral body collapse and be utilized to predict impending vertebral body fractures.

Contradictions of such fixation are as follows:

Presence of pyogenic infection;

Presence of tuberculous infection;

Presence of neoplasia;

Presence of sepsis;

High velocity spinal fractures;

Fractures above the level of T-6; and

Fractures which demonstrated widened pedicles on AP spine x-rays.

To illustrate the teachings of the present invention, the following specification will be described with respect to treatment of fractures relating to osteoporotic bone, but it is to be understood that the invention applies also to treatment of fractures relating to non-osteoporotic bone.

In carrying out the teachings of the method of the present invention as to osteoporotic vertebral fixation, a patient 10 is placed on a generally U-shaped holder 12 so that the patient lies above the central part 14 of holder 12 and between a pair of spaced sides 16 and 18 as shown in FIGS. 1, 2 and 4. Holder 12 can be of any suitable construction, such as metal or plastic and is constructed to render the patient generally immovable when the patient is prone as shown in FIGS. 1-4. The length of sides 16 and 18 is preferably sufficient to achieve the aim of rendering the patient generally immovable.

Typically, the length of sides 16 and 18 is approximately 12 to 15 inches. For the comfort of the patient, a cushion 20 is provided above central part 14 as shown in FIG. 2. The central part 14 has holes 22 therethrough

(FIGS. 6 and 7) and the holes are for the purpose of receiving circular portions of the cushion 20 formed due to the weight of the patients to anchor the cushion in place and to prevent it from moving relative to holder 12 when the patient's body is on the cushion as shown in FIG. 2. This assures that the cushion will not contribute to the movement of the patient relative to the holder. Pads 24 and 26 are placed at the chest and hip regions of the patient for the comfort of the patient and to extend the spine.

FIG. 5 shows a support bracket 28 adjustably mounted on the sides 16 and 18 of holder 12. The purpose of bracket 28 is to support a cannula 30 and guide pin 70 forming part of the apparatus of the present invention. Cannula 30 will be described hereinafter in more detail.

Bracket 28 includes a pair of clamps 31 and 32 for releasably connecting the bracket to respective sides 16 and 18 of holder 12 by means of thumb screws 34. Bracket 28 further includes a pair of legs 38 and 40 which are made up of connectable extensions as shown in FIG. 5. Legs 38 and 40 are releasably connected to respective clamps 31 and 32 by thumb screws 42 and 44. A rod 46 is connected by thumb screws 48 and 50 to end sleeves 52 and 54 on the upper ends of respective legs 38 and 40. Rod 46 can be rotated in the sleeves 52 and 54 to thereby rotate a clamp 56 coupled to the rod 46 and having a leg 58 on which cannula 30 and guide pin 70 are adjustably mounted. Thus, the cannula can be moved toward or away from legs 38 and 40 and can rotate about the longitudinal axis of rod 46. In this way, the cannula can be adjusted as to the distance from the patient to rod 46 as well adjust the position of the bracket 28 by means of shifting clamps 31 and 32 along the sides of holder 12.

The teachings of the method of the present invention will be hereinafter described with respect to treatment of a person with osteoporotic spine disease. The presence of such disease is evidenced by a plain film spinal x-rays and either CAT-scan evidence of impending fracture or plain film x-ray evidence of vertebral body collapse. In obtaining such evidence, both sagittal and coronal CAT-scans should be obtained before the performance of the method of the present invention. The coronal scan is also needed to determine the width of the vertebral body which is to be treated and also to rule out the presence of posterior displacement of the colon which can interfere with the posterolateral approach which generally occurs in four percent of the patients. If the colon is noted, the approach must be altered to the other side of the body.

The sagittal CAT-scan is needed to determine the height of the vertebral body to be treated. If an acute compression fracture is present, then the appropriate height is determined by the height of the vertebral body located superior to the fracture. If the patient has an acute fracture of a vertebral body, the patient is to be placed prone in the manner shown in FIGS. 1–4.

Attempts to reconstitute the height of the vertebral body should be made by hyperextending the patient's spine as shown in FIG. 3. If the patient has an impending fracture of a vertebral body, then the patient can be positioned either prone as shown in FIGS. 1–4 or on his side depending upon the surgeon's preference. If on the side, the patient is rendered immovable by suitable structure for holding the patient in one position during the time that the method of the present invention is being performed.

The posterolateral approach is used whether the patient is prone (FIGS. 1–4) or in the lateral position. Then the entry point on the skin is determined radiologically and is located approximately 10 cm from the midline and just inferior to a rib if present at that level as shown in FIG. 8.

FIG. 8 shows the entry points of the instruments for carrying out the method of the present invention for two vertebral bodies spaced from each other. The instrument shown in FIG. 8 is a guide pin 70 which enters the patient at an incision 62 (FIG. 8). A choice of angle of entry of the guide pin 70 can be 30° to 45° as shown in FIG. 9. The vertebral body to be injected is located fluoroscopically. The skin, underlying soft tissue and lateral cortex of the vertebral body are injected with a long spinal needle. General anesthesia is not advisable.

The surgical procedure for treating a vertebral body is as follows:

The vertebral body 66 to be treated (FIGS. 10 and 11) is penetrated by the pointed end 68 of quide pin 70 which enters the vertebral body between the inferior and superior end plates of the body 66 and into the posterior quarter of the vertebral body. Pedioles are to be ignored. The quide pin penetrates to a depth in the range of 60 to 80% across vertebral body 66 as shown in FIG. 11. Placement of the pin is fluoroscopically monitored. Any further penetration beyond 70% runs the risk of perforation of the vertebral body and an adjacent major vessel or lung.

With the guide pin penetrating the vertebral body 66 as shown in FIGS. 10 and 11, a soft tissue expander 71, which is a tubular member as shown in FIGS. 12 and 13, is inserted over the guide pin until the end of the expander makes contact with the vertebral body as shown in FIG. 13. Expander 71 then forms a guide for cannula 30 to guide the cannula toward the vertebral body to be treated.

When the cannula makes contact with the wall of the vertebral body, the cannula is rotated clockwise under pressure to force the teeth 31 of the cannula into the wall of the vertebral body 66 as shown in FIG. 15. This locks the cannula into the wall as shown in FIG. 16 so that the cannula can be coupled to bracket 28 (FIG. 5) for stabilization thereby. Then, the expander 71 can be removed from the interior of cannula 30 as shown in FIG. 17.

Once the cannula is stabilized, a drill stop is formed to prevent penetration of the far cortex of the vertebral body by drill 72 (FIGS. 18 and 19). The drill stop is formed by a shoulder 67 on pin 70 (FIG. 19) which is engageable with shoulder 69 on drill 72 and holding pin 70 with bracket 28.

Vertebral body 66 is drilled by a 4 mm drill 72. The drilling depth is monitored by fluoroscopy to the end of the guide 10. The drill is tubular and is guided by the guide pin 70 as shown in FIG. 19.

The next step to be performed in carrying out the method of the present invention is to withdraw the pointed guide pin 70 and replace it with a deflated elliptical or chambered bladder device 65. The elliptical balloon 65 is monitored fluoroscopically. This is achieved by inflating the elliptical balloon 65 to a pressure in the range of 50 to 300 psi with a radio-opaque contrast medium by an injector as shown in FIG. 24. The purpose of the elliptical balloon 65 is to center a second, checker-shaped inflatable device or balloon 76 (FIGS. 21–23) in the interior of vertebral body 66. After the elliptical balloon 65 is deflated and removed, check-

er-shaped or cylindrically shaped device or balloon 76 is inserted into the cannula and directed into the interior of vertebral body 66 as shown in FIG. 21.

The diameter of balloon 76 is determined by the pre-operative CAT-scan results. The diameter is in the range of 1.0 cm to 3.5 cm. The axial height of the balloon (FIG. 23) is determined by the intra-operative reduction height of the vertebral body fracture. The height is in the range of 0.5 cm to 4.0 cm. If the balloon placement is somewhat eccentric, a smaller balloon may be needed. The balloon 76 has a neck 77, and the outer configuration of the balloon 76 is substantially the same as that of the inner surface of the cortical wall of the vertebral body 66.

The progress of balloon inflation is monitored fluoroscopically to ensure proper insertion of the balloon 76. The balloon is injected, gradually, with contrast as in the case of the elliptical balloon to a maximum height. This may require pressure as great as 300 psi to accomplish. The balloon's inflation should be monitored on the lateral fluoroscopic view of the spine. Posterior displacement of the bone into the spinal canal or full expansion of balloon 76 signals the termination of the chamber preparation. Further expansion of the balloon at this point could result in spinal cord or root injury.

As balloon 76 is inflated, it forces the osteoporotic bone marrow 67 laterally and outwardly of the wall of the vertebral body 66. This compacts the bone marrow and leaves a void in the interior of the vertebral body to be treated. The compacted bone marrow forms a dam to block any fracture of the vertebral body. Thus, when liquid synthetic bone or methyl methacrylate cement is forced into the void, the compacted bone marrow will substantially prevent flow through the fracture.

After the balloon 76 has been deflated it is removed from the cannula 30. An irrigation nozzle (not shown) is then inserted into the vertebral body 66. Irrigation is performed with normal saline solution. Irrigation should be performed until the effluent is reasonably clear.

After the vertebral body has been irrigated, the artificial bone substitute, which may include a synthetic bone or methyl methacrylate cement, is injected into the void left by the inflation of balloon 76. A double barrel injection gun nozzle aspirates constantly through the short barrel. Such injection gun nozzle is shown in FIGS. 25 and 26 and includes a material delivery tube 80 and an aspirating tube 82, both of which have open ends 84 and 86, respectively. Injection of synthetic bone material is monitored using lateral fluoroscopy. Leakage posteriorly into the canal of tube 82 requires an abrupt stopping of the injection. Leakage anteriorly is exceedingly rare since the anterior longitudinal ligament is intact with these fractures.

The volume of injection ranges between 3 and 5 cc's. A larger volume is injected than one would predict from the size of the chamber formed with balloon 76 even in those patients injected prophylactically.

The injection gun nozzle shown in FIG. 26 is slowly removed as the vertebral body is injected with artificial bone or cement. At the entry hole into the vertebral body the tip of the injection nozzle is twisted as the cement sets up. At that time, the injection gun nozzle should be removed. FIGS. 28A and 28B show the sequence of the expansion of elliptical balloon 65. FIGS. 28C and 28D show checker-shaped balloon 76 in the vertebral body 66. FIG. 28E shows the vertebral body after the mass 81 of artificial bone or methyl methacrylate cement has set to a hardened condition.

After the proper volume of artificial bone or cement has been inserted into the void of the vertebral body, cannula 30 is removed and the skin is dressed with a bandage.

Surgical protocol for Colles' fractures are described as follows with reference to FIGS. 29–32.

The current treatment for distal radius fractures of the wrist in osteoporotic patients includes: (1) closed reduction and application of a short arm cast with the wrist in a flexed position for six weeks; (2) application of a short arm cast without reduction of the fracture; and (3) closed reductions of the fracture with Chinese finger traps and application of pins and plaster. All three techniques require cast immobilization for 6 to 8 weeks and result in considerable stiffness for many months. In the case of the second treatment described, the wrist is also malpositioned.

The treatment of the present invention involves the reduction of the fracture with Chinese finger traps and the subsequent use of a balloon to create a chamber followed by the injection of either methyl methacrylate cement or a flowable bone substitute into the chamber to fix the fracture. Immobilization would only be a removable splint for two to four weeks. The wrist would be exercised daily to prevent the subsequent stiffness which usually follows wrist fracture.

The steps involved in this procedure are the same as those listed for the percutaneous fixation of vertebral body fractures. The Colles' fracture is positioned this time using finger traps 90 as shown in FIGS. 29 and 30. Local anesthesia is injected. The hand and forearm are prepped in the usually sterile fashion. A smooth guide pin 92 (FIG. 31) is inserted from the tip of the styloid at a 45° angle across the fracture 93. This is followed by a soft tissue expander and then a 2 mm cannula 91. A 2 mm drill 94 (FIG. 32) is then used to drill a canal or passage across the fracture using fluoroscopic control. The drill and guide pin are removed and a gourd-shaped distal radius balloon 95 is introduced into the fracture region through the cannula. The balloon 95 has a configuration substantially the same as that of the inner surface of the cortical bone. The deflated diameter of a globe-shaped part 95*a* of balloon 95 is in the range of 7 to 10 mm, the overall length L is in the range of 4 to 7 cm, and cylindrical part 95*b* has a length in the range of 5 to 8 mm.

The balloon 95 is expanded with contrast liquid using x-ray control. Expansion of the balloon 95 causes compacting of the osteoporotic bone marrow against the inner surface of the cortical wall. The balloon is then deflated and the cavity is then injected with a mass 97 of either methyl methacrylate cement or liquid bone substitute. A splint is used for two to four weeks.

Surgical protocol for the percutaneous fixation of proximal humerus fractures is as follows, with reference to FIGS. 33 and 34:

Percutaneous intra-osseous balloon fixation is indicated for all one-part shoulder fractures (i.e. non-displaced shoulder fractures), all two-part shoulder fractures except greater tuberosity fractures, and all three-part fractures that do not include a prominent elevation of the greater tuberosity or could be better treated with a hemiarthroplasty. It is not now indicated for four-part fractures.

The fracture is reduced with the patient sitting upright. The fracture is injected with local anesthesia as is

the area just posterior to the greater tuberosity where a guide pin will be introduced. The fracture is reduced with traction and held by an assistant. A guide pin is introduced through the head of the humerus just posteriorly to the greater tuberosity and followed fluoroscopically across the fracture to approximately 8 cm below the fracture. The soft tissue expander is introduced followed by the 3 mm cannula. A canal is drilled over the guide pin with a 3 mm drill 100 and the drill and guide pin are removed.

A gourd-shaped proximal humerus inflatable device or balloon is introduced into the cavity and inflated using contrast and fluoroscopic control. The balloon is then removed and then the cavity is injected with a mass 101 of either methyl methacrylate cement or a liquid artificial bone substitute as shown in FIG. 34. The fracture is held until the injected substance hardens. The entry site on the top of the shoulder is dressed with a steri-strip and the patient is given a sling for 2 to 4 weeks. During those weeks, the patient should remove the sling several hours a day but perform no heavy lifting.

The gourd-shaped proximal humerus balloon has a configuration substantially the same as that of balloon 95 (FIGS. 31 and 32). The diameter of the globe-shaped part of the proximal humerus balloon is in the range of 14 to 20 mm. The diameter of the cylindrical part is in the range of 6 to 8 mm, and its length is in the range of 8 to 14 cm.

We claim:

1. A method of fixation of a fracture or impending fracture of a bone having bone marrow therein comprising:

forming a passage in the bone marrow;

compacting the bone marrow to increase the volume of said passage; and

filling the passage with a flowable material capable of setting to a hardened condition.

2. A method as set forth in claim 1, wherein said compacting step includes forcing the bone marrow outwardly and against the site of the fracture or impending fracture.

3. A method as set forth in claim 1, wherein said compacting step includes forcing the bone marrow outwardly of the central portion of the bone.

4. A method as set forth in claim 3, wherein said forcing step includes directing the bone marrow against an inner surface of the bone within the fracture or impending fracture.

5. A method as set forth in claim 1, wherein said compacting step includes inflating an inflatable device in said passage to urge the bone marrow therein.

6. A method as set forth in claim 5, wherein is included the step of inserting the device in the passage before the inflating step.

7. A method as set forth in claim 1, wherein is included the step of inserting an inflatable device in said passage, said increasing step including inflating the device to force the bone marrow outwardly of said passage.

8. A method as set forth in claim 1, wherein said forming step includes drilling said bone marrow to form said passage.

9. A method as set forth in claim 8, wherein said drilling step includes guiding a drill through and into the proximate cortical bone marrow.

10. A method as set forth in claim 8, wherein said forming step includes drilling the bone marrow to a predetermined depth.

11. A method as set forth in claim 10, wherein said depth is in the range of approximately 60 to 80% of the maximum oblique dimension of the bone containing the bone marrow.

12. A method as set forth in claim 1, wherein the fracture is a fracture of a vertebral body of the human spine.

13. A method as set forth in claim 1, wherein said fracture is a Colles' fracture of the distal radius.

14. A method as set forth in claim 1, wherein said fracture is a fracture of the proximal humerus.

15. A method as set forth in claim 1, wherein said flowable material is selected from the group consisting of liquid synthetic bone and methyl methacrylate cement.

16. A method of fixation of a fracture of a bone containing bone marrow therein comprising:

drilling said bone to form a recess therein;

inserting an inflatable device in said recess;

inflating the device in the recess to increase the volume thereof and to force the bone marrow outwardly of the recess to form a void in the bone; and

filling the void in the bone with a flowable material capable of setting to a hardened condition.

17. A method as set forth in claim 16, wherein said inflating step includes inflating a chambered bladder device having an elliptical configuration.

18. A method as set forth in claim 16, wherein said inflating step includes inflating a chambered bladder device having generally cylindrical configuration.

19. A method as set forth in claim 16, wherein is included the step of guiding a drill into the bone.

20. A method as set forth in claim 16, wherein said inflating step includes inflating the device with a radiopaque material.

21. A method as set forth in claim 16, wherein said inflating step includes compacting the bone marrow in the bone.

22. A method as set forth in claim 16, wherein said inflating step includes forcing the bone marrow outwardly of the central portion of the bone.

23. A method as set forth in claim 22, wherein said inflating step includes compacting the bone marrow against an inner surface of the bone.

24. A method as set forth in claim 16, wherein said drilling step includes guiding a drill into the bone, and rotating the drill about its longitudinal axis.

25. A method as set forth in claim 24, wherein said drilling step includes drilling the bone marrow to a predetermined depth.

26. A method as set forth in claim 25, wherein said depth is in the range of approximately 60 to 80% of the maximum oblique dimension of the bone.

27. A method as set forth in claim 16, wherein the fracture is a fracture of a vertebral body of the human spine.

28. A method as set forth in claim 16, wherein said fracture is a Colles' fracture of the distal radius.

29. A method as set forth in claim 16, wherein said fracture is a fracture of the proximal humerus.

* * * * *

UNITED STATES PATENT AND TRADEMARK OFFICE

CERTIFICATE OF CORRECTION

PATENT NO. : 5,108,404
DATED : April 28, 1992
INVENTOR(S) : Arie Scholten and Mark A. Reiley

It is certified that error appears in the above-identified patent and that said Letters Patent is hereby corrected as shown below:

Title page,
Item [*] Notice:, substitute the following Terminal Disclaimer information:
-- The portion of the term of this patent subsequent to February 9, 2009 has been disclaimed. --

Signed and Sealed this

Second Day of December, 2003

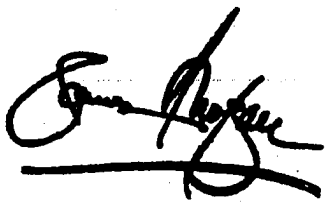

JAMES E. ROGAN
Director of the United States Patent and Trademark Office

A-4

US006235043B1

(12) **United States Patent**
Reiley et al.

(10) **Patent No.: US 6,235,043 B1**
(45) **Date of Patent: May 22, 2001**

(54) **INFLATABLE DEVICE FOR USE IN SURGICAL PROTOCOL RELATING TO FIXATION OF BONE**

(75) Inventors: **Mark A. Reiley**, Piedmont; **Arie Scholten**, Fremont; **Karen Talmadge**, Palo Alto, all of CA (US)

(73) Assignee: **Kyphon, Inc.**, Sunnyvale, CA (US)

(*) Notice: Subject to any disclaimer, the term of this patent is extended or adjusted under 35 U.S.C. 154(b) by 0 days.

(21) Appl. No.: **08/788,786**

(22) Filed: **Jan. 23, 1997**

Related U.S. Application Data

(63) Continuation of application No. 08/188,224, filed on Jan. 26, 1994, now abandoned.

(51) **Int. Cl.**[7] **A61M 29/00**

(52) **U.S. Cl.** **606/192**; 604/96

(58) **Field of Search** 606/191, 192, 606/95; 604/96, 916; 128/898

(56) **References Cited**

U.S. PATENT DOCUMENTS

1,965,653	7/1934	Kennedy .
3,091,237	5/1963	Skinner .

(List continued on next page.)

FOREIGN PATENT DOCUMENTS

3736604	11/1989	(DE) .
512456	9/1939	(GB) .
9001858	3/1992	(NL) .
906530	2/1982	(RU) .
1148610	4/1985	(RU) .

OTHER PUBLICATIONS

S.L. Silverman, "The Clinical Consequences of Vertebral Compression Fracture", *Bone*, 13, S27–S31 (1992).

Melton, III, L. Joseph et al., "Perspective: How Many Women Have Osteoporosis", *Journal of Bone and Mineral Research*, vol. 7, No. 9, 1992, pp. 1005–1010.

Harrington, Kevin D., The Use of Methylmethacrylate as an Adjunct in the Internal Fixation of Malignant Neoplastic Fractures, *The Journal of Bone and Joint Surgery*, vol. 54A, No. 8, Dec. 1972, pp. 1665–1676.

Instructions entitled "Exeter Pressurizer System", by Howmedica Inc., Orthopaedics Division, 1979, 2 pages.

B. Lawrence Riggs, M.D. and Joseph Melton III, M.D., "Medical Progress, Involutional Osteoporosis", *The New England Journal of Medicine*, Jun. 26, 1986, pp. 1676–1686.

Lawrence D. Cohen, M.D., "Fractures of the Osteoporotic Spine", Pathologic Fractures in Betabolic Bone Disease, *The Orthopedic Clinics of North America*, vol. 21:1, Jan. 1990, pp. 143–152.

* cited by examiner

Primary Examiner—Michael H. Thaler
Assistant Examiner—Julian W. Woo
(74) *Attorney, Agent, or Firm*—Ryan Kromholz & Manion

(57) **ABSTRACT**

A balloon for use in compressing cancellous bone and marrow (also known as medullary bone or trabecular bone) against the inner cortex of bones whether the bones are fractured or not. The balloon comprises an inflatable, non-expandable balloon body for insertion into said bone. The body has a shape and size to compress at least a portion of the cancellous bone to form a cavity in the cancellous bone and to restore the original position of the outer cortical bone, if fractured or collapsed. The balloon is prevented from applying excessive pressure to the outer cortical bone. The wall or walls of the balloon are such that proper inflation the balloon body is achieved to provide for optimum compression of all the bone marrow. The balloon is able to be folded so that it can be inserted quickly into a bone. The balloon can be made to have a suction catheter. The main purpose of the balloon is the forming or enlarging of a cavity or passage in a bone, especially in, but not limited to, vertebral bodies.

28 Claims, 10 Drawing Sheets

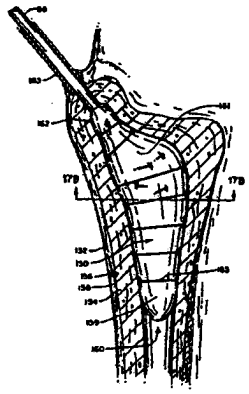

U.S. PATENT DOCUMENTS

3,112,743	12/1963	Cochran et al. .	5,102,413	4/1992	Poddar .	
3,648,294	3/1972	Shahrestani .	5,108,404	4/1992	Scholten et al. .	
3,766,924	10/1973	Pidgeon .	5,147,366	9/1992	Arroyo et al. .	
3,800,788	4/1974	White .	5,163,989	11/1992	Campbell et al. .	
3,850,176	11/1974	Gottschalk .	5,176,683	1/1993	Kimsey et al. .	
3,875,595	4/1975	Froning .	5,176,692 *	1/1993	Wilk et al.	606/151
3,889,665	6/1975	Ling et al. .	5,290,306 *	3/1994	Trotta et al.	606/194
4,274,163	6/1981	Malcom et al. .	5,295,994 *	3/1994	Bonutti	606/192
4,313,434	2/1982	Segal .	5,303,718	4/1994	Krajicek .	
4,399,814	8/1983	Pratt, Jr. et al. .	5,330,429 *	7/1994	Noguchi et al.	604/96
4,462,394	7/1984	Jacobs .	5,331,975 *	7/1994	Bonotti	606/192
4,466,435	8/1984	Murray .	5,361,752 *	11/1994	Moll et al.	128/20
4,467,479	8/1984	Brody .	5,383,932	1/1995	Wison et al. .	
4,488,549	12/1984	Lee et al. .	5,423,850	6/1995	Berger .	
4,562,598	1/1986	Kranz .	5,441,538	8/1995	Bonutti .	
4,595,006	6/1986	Burke et al. .	5,454,365	10/1995	Bonutti .	
4,625,722	12/1986	Murray .	5,468,245	11/1995	Vargas, III .	
4,627,434	12/1986	Murray .	5,480,400	1/1996	Berger .	
4,628,945	12/1986	Johnson, Jr. .	5,514,143	5/1996	Bonutti et al. .	
4,697,584	10/1987	Haynes .	5,514,153	5/1996	Bonutti .	
4,706,670	11/1987	Andersen et al. .	5,522,790	6/1996	Moll et al. .	
4,714,478	12/1987	Fischer .	5,522,846	6/1996	Bonutti .	
4,772,287	9/1988	Ray et al. .	5,527,343	6/1996	Bonutti .	
4,888,022	12/1989	Huebsch .	5,527,624	6/1996	Higgins et al. .	
4,888,024	12/1989	Powlan .	5,531,856	7/1996	Moll et al. .	
4,892,550	1/1990	Huebsch .	5,540,711	7/1996	Kieturakis et al. .	
4,896,662	1/1990	Noble .	5,545,222	8/1996	Bonutti .	
4,932,975	6/1990	Main et al. .	5,549,679	8/1996	Kuslich .	
4,969,888	11/1990	Scholten et al. .	5,562,736	10/1996	Ray et al. .	
5,002,576	3/1991	Fuhrmann et al. .	5,571,109	11/1996	Bertagnoli .	
5,053,035	10/1991	McLaren .	5,571,189	11/1996	Kuslich .	
5,071,435	12/1991	Fuchs et al. .	5,772,681 *	6/1998	Leoni	606/192

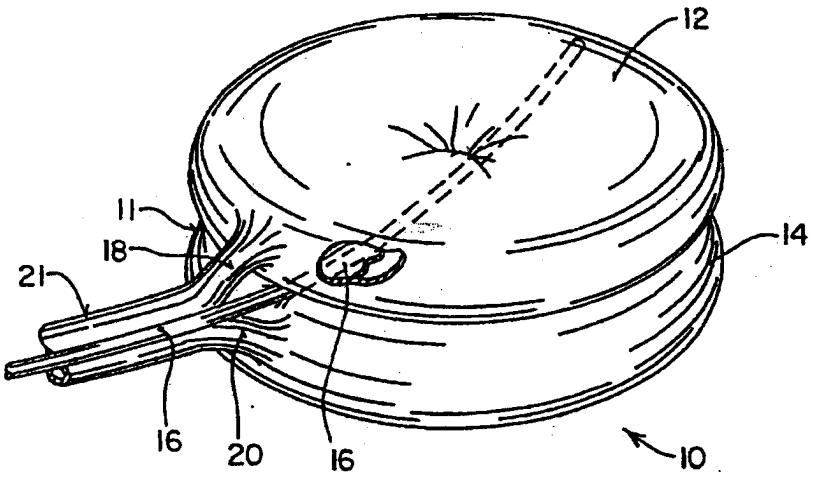

FIG. 1

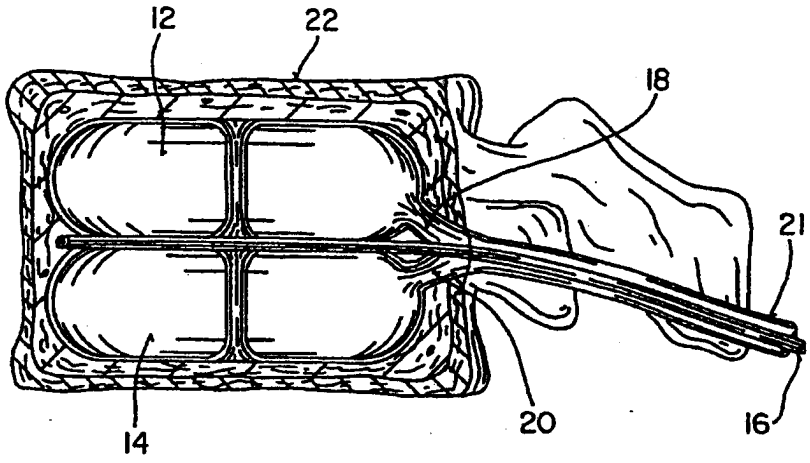

FIG. 2

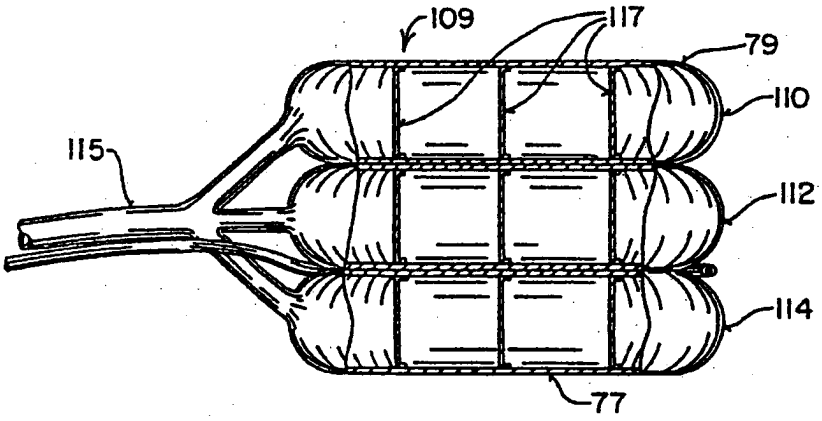

FIG. 3

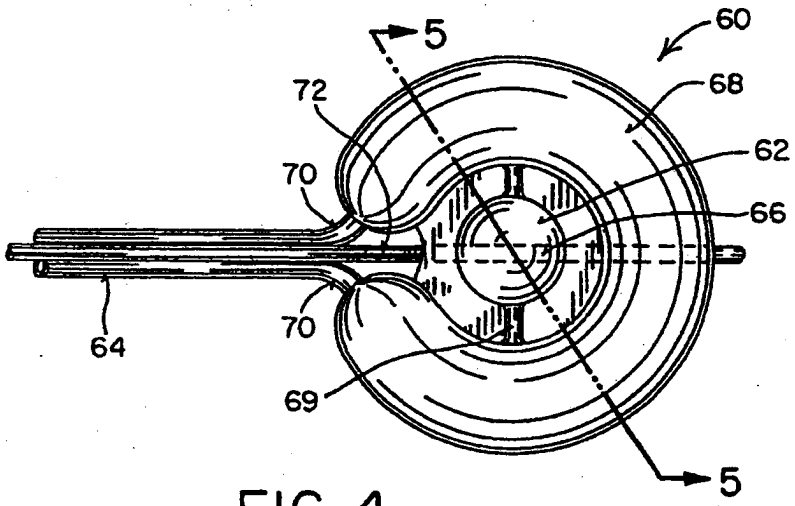

FIG. 4

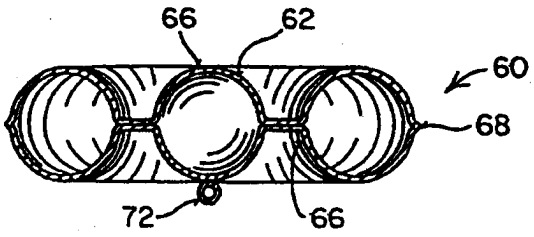

FIG. 5

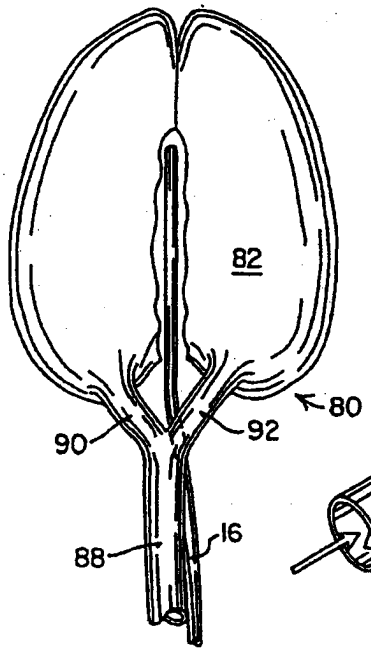

FIG. 6

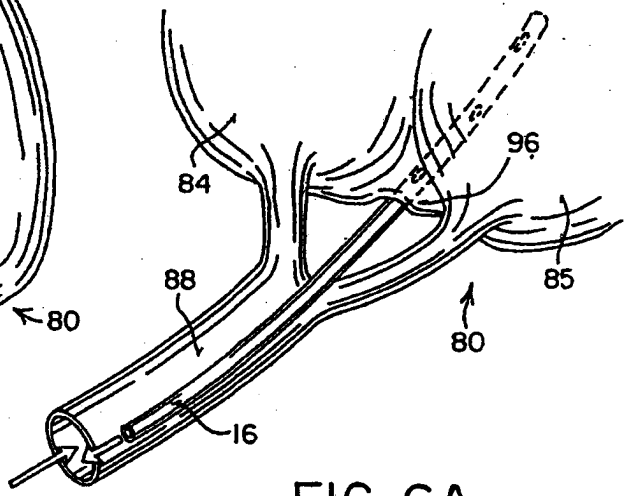

FIG. 6A

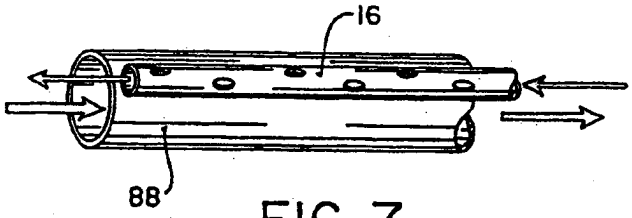

FIG. 7

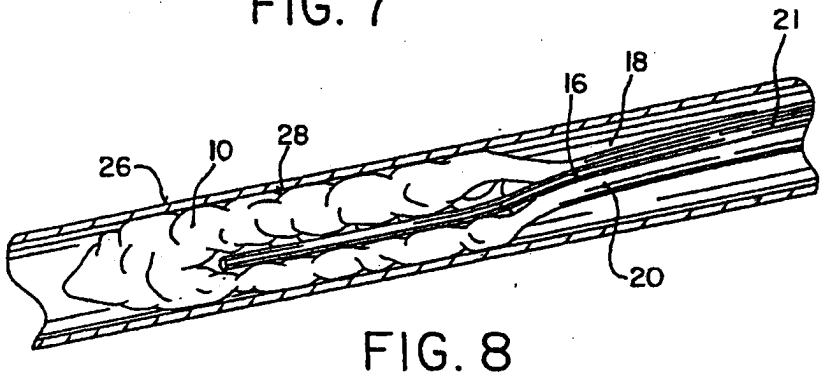

FIG. 8

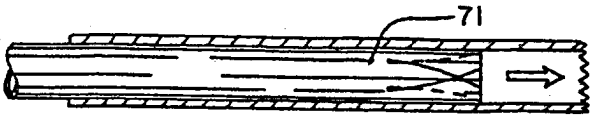

FIG. 9

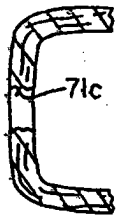

FIG. 9B

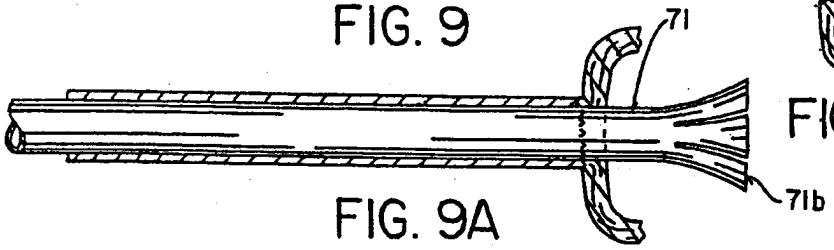

FIG. 9A

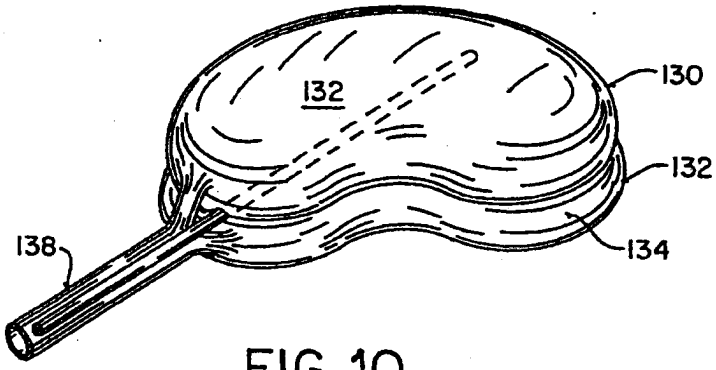

FIG. 10

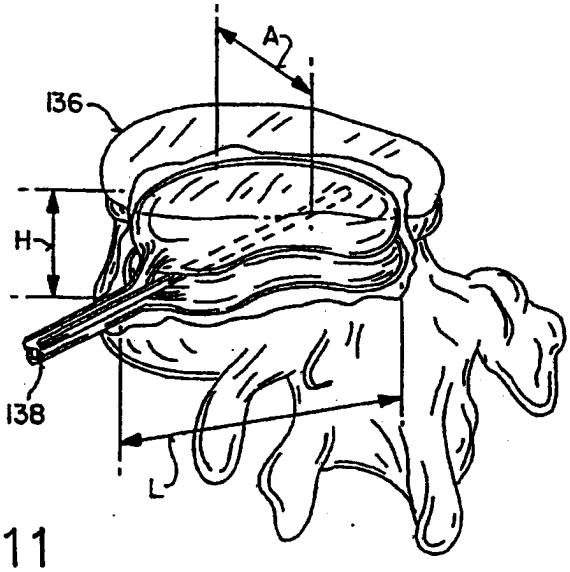

FIG. 11

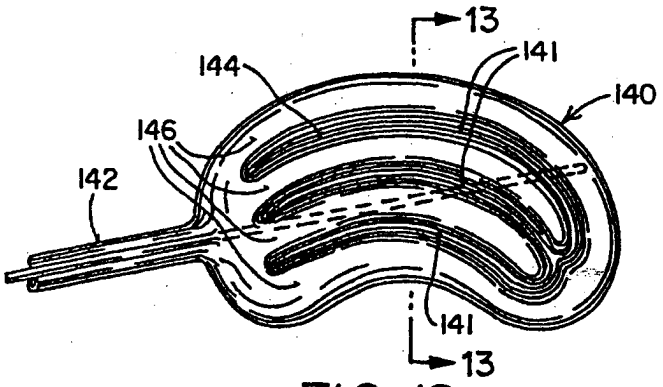

FIG. 12

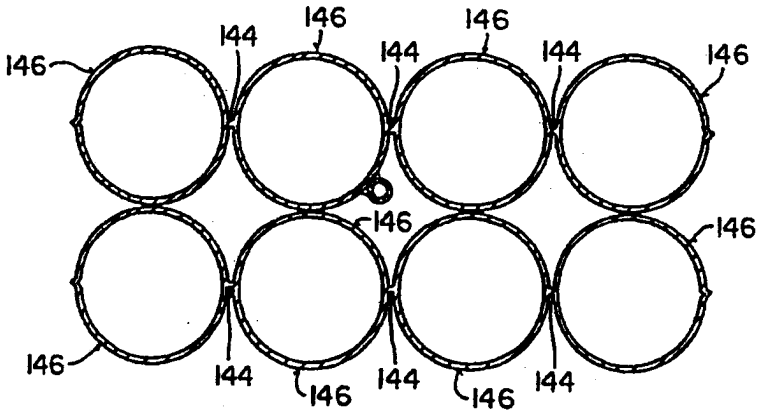

FIG. 13

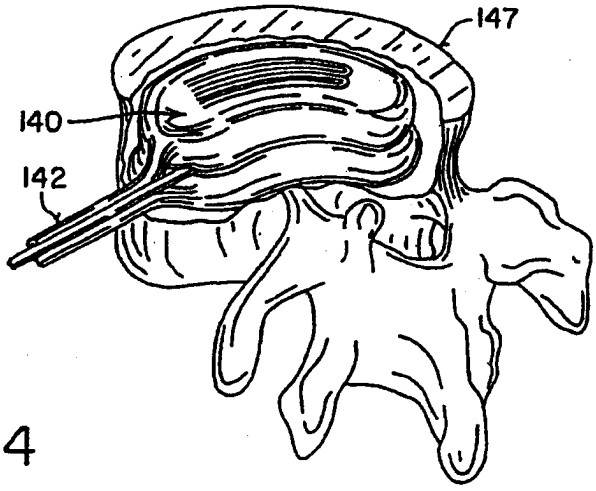

FIG. 14

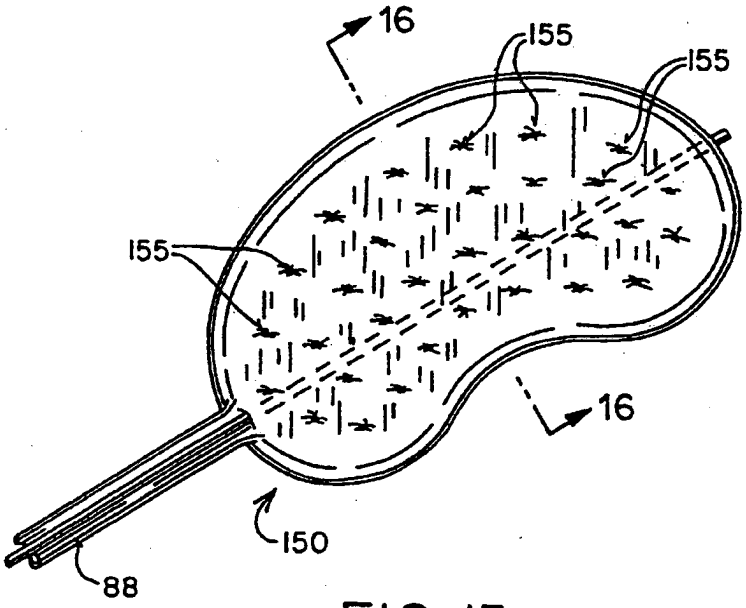

FIG. 15

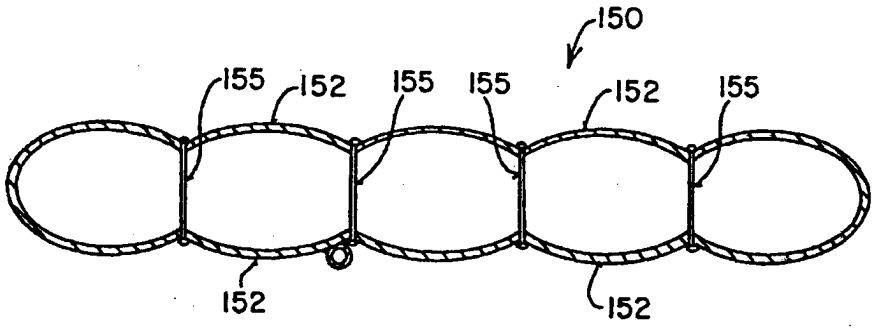

FIG. 16

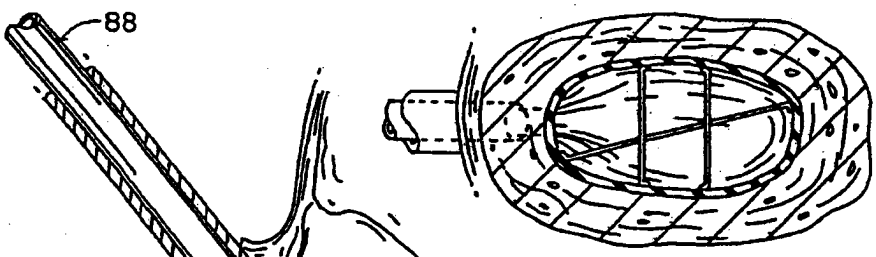

FIG. 17B

FIG. 17A

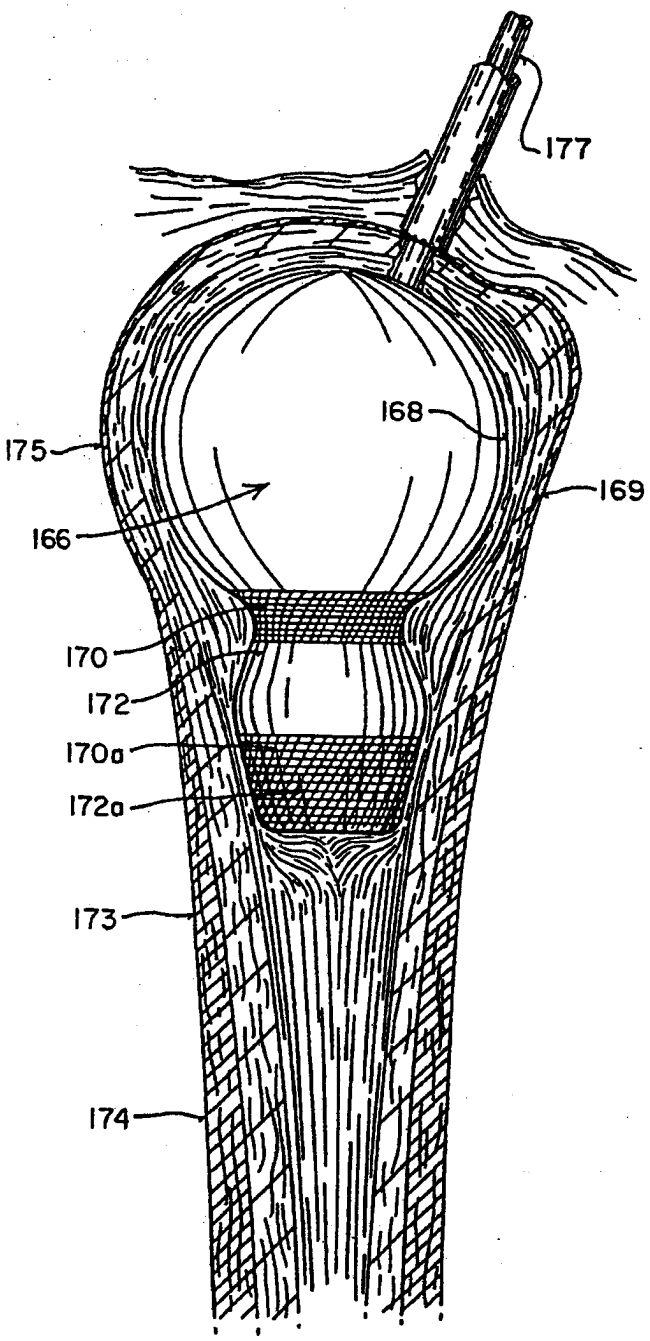

FIG. 18

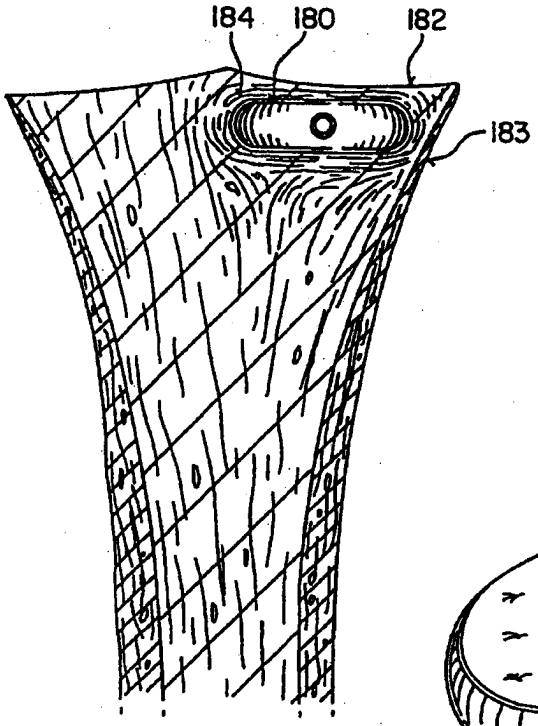

FIG. 19A

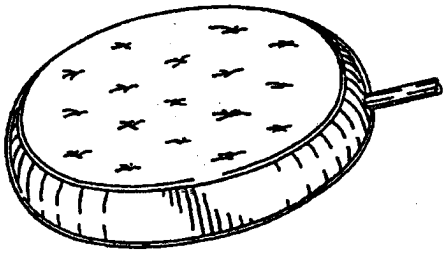

FIG. 19B

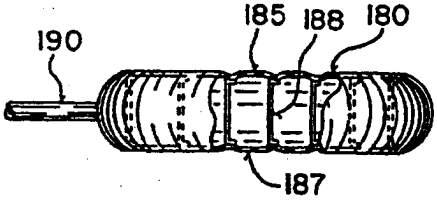

FIG. 19C

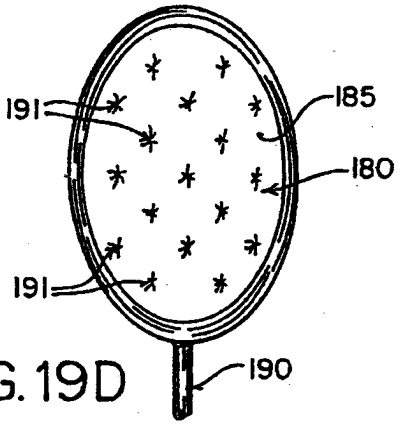

FIG. 19D

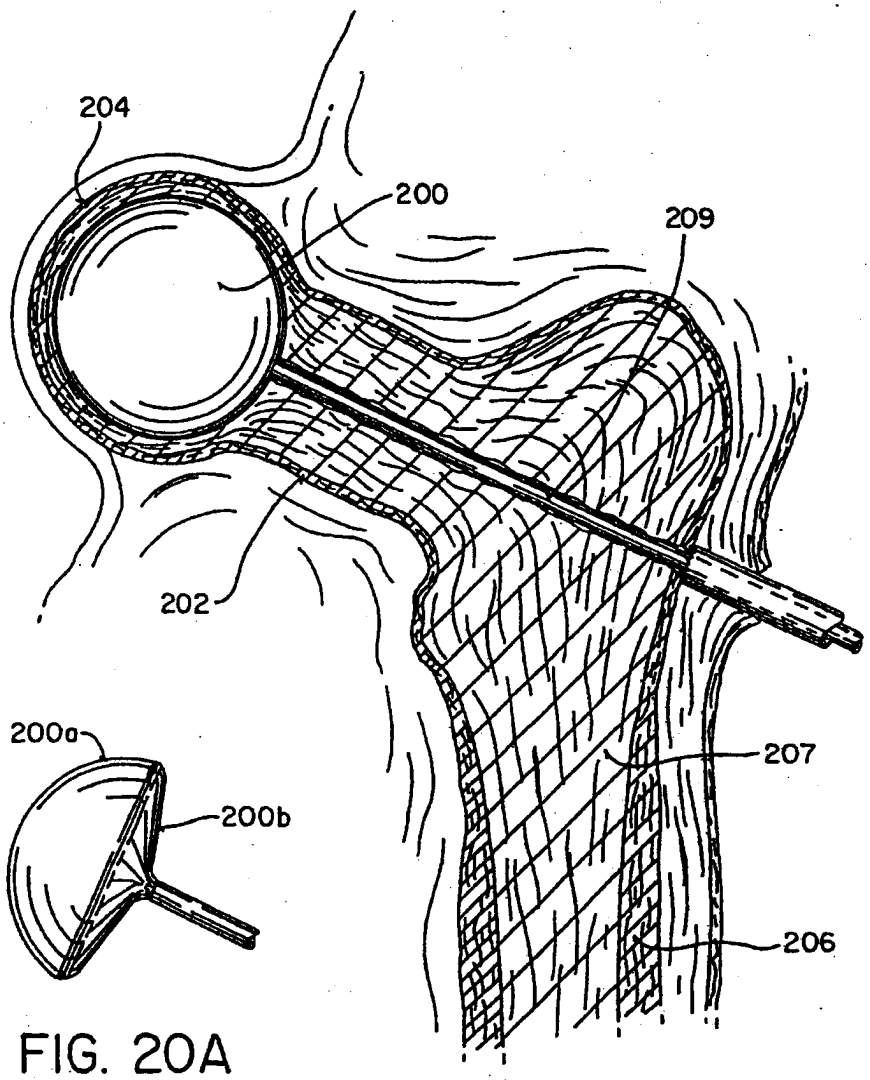

FIG. 20A

FIG. 20

INFLATABLE DEVICE FOR USE IN SURGICAL PROTOCOL RELATING TO FIXATION OF BONE

This is a continuation of application Ser. No. 08/188,224 filed on Jan. 26, 1994, now abandoned.

This invention relates to improvements in the surgical treatment of bone conditions of the human and other animal bone systems and, more particularly, to an inflatable balloon-like device for use in treating such bone conditions. Osteoporosis, avascular necrosis and bone cancer are diseases of bone that predispose the bone to fracture or collapse. There are 2 million fractures each year in the United States, of which about 1.3 million are caused by osteoporosis. Avascular necrosis and bone cancers are more rare but can cause bone problems that are currently poorly addressed.

BACKGROUND OF THE INVENTION

In U.S. Pat. Nos. 4,969,888 and 5,108,404, an apparatus and method are disclosed for the fixation of fractures or other conditions of human and other animal bone systems, both osteoporotic and non-osteoporotic. The apparatus and method are especially suitable for use in the fixation of, but not limited to, vertebral body compression fractures, Colles fractures and fractures of the proximal humerus.

The method disclosed in these two patents includes a series of steps which a surgeon or health care provider can perform to form a cavity in pathological bone (including but not limited to osteoporotic bone, osteoporotic fractured metaphyseal and epiphyseal bone, osteoporotic vertebral bodies, fractured osteoporotic vertebral bodies, fractures of vertebral bodies due to tumors especially round cell tumors, avascular necrosis of the epiphyses of long bones, especially avascular necrosis of the proximal femur, distal femur and proximal humerus and defects arising from endocrine conditions).

The method further includes an incision in the skin (usually one incision, but a second small incision may also be required if a suction egress is used) followed by the placement of a guide pin which is passed through the soft tissue down to and into the bone.

The method further includes drilling the bone to be treated to form a cavity or passage in the bone, following which an inflatable balloon-like device is inserted into the cavity or passage and inflated. The inflation of the inflatable device causes a compacting of the cancellous bone and bone marrow against the inner surface of the cortical wall of the bone to further enlarge the cavity or passage. The inflatable device is then deflated and then is completely removed from the bone. A smaller inflatable device (a starter balloon) can be used initially, if needed, to initiate the compacting of the bone marrow and to commence the formation of the cavity or passage in the cancellous bone and marrow. After this has occurred, a larger, inflatable device is inserted into the cavity or passage to further compact the bone marrow in all directions.

A flowable biocompatible filling material, such as methylmethacrylate cement or a synthetic bone substitute, is then directed into the cavity or passage and allowed to set to a hardened condition to provide structural support for the bone. Following this latter step, the insertion instruments are removed from the body and the incision in the skin is covered with a bandage.

While the apparatus and method of the above patents provide an adequate protocol for the fixation of bone, it has been found that the compacting of the bone marrow and/or the trabecular bone and/or cancellous bone against the inner surface of the cortical wall of the bone to be treated can be significantly improved with the use of inflatable devices that incorporate additional engineering features not heretofore described and not properly controlled with prior inflatable devices in such patents. A need has therefore arisen for improvements in the shape, construction and size of inflatable devices for use with the foregoing apparatus and method, and the present invention satisfies such need.

Prior Techniques for the Manufacture of Balloons for In-Patient Use

A review of the prior art relating to the manufacture of balloons shows that a fair amount of background information has been amassed in the formation of guiding catheters which are introduced into cardiovascular systems of patients through the brachial or femoral arteries. However, there is a scarcity of disclosures relating to inflatable devices used in bone, and none for compacting bone marrow in vertebral bodies and long bones.

In a dilatation catheter, the catheter is advanced into a patient until a balloon is properly positioned across a lesion to be treated. The balloon is inflated with a radiopaque liquid at pressures above four atmospheres to compress the plaque of the lesion to thereby dilate the lumen of the artery. The balloon can then be deflated, then removed from the artery so that the blood flow can be restored through the dilated artery.

A discussion of such catheter usage technique is found and clearly disclosed in U.S. Pat. No. 5,163,989. Other details of angioplasty catheter procedures, and details of balloons used in such procedures can be found in U.S. Pat. Nos. 4,323,071, 4,332,254, 4,439,185, 4,168,224, 4,516,672, 4,538,622, 4,554,929, and 4,616,652.

Extrusions have also been made to form prism shaped balloons using molds which require very accurate machining of the interior surface thereof to form acceptable balloons for angioplastic catheters. However, this technique of extrusion forms parting lines in the balloon product which parting lines are limiting in the sense of providing a weak wall for the balloon itself.

U.S. Pat. No. 5,163,989 discloses a mold and technique for molding dilatation catheters in which the balloon of the catheter is free of parting lines. The technique involves inflating a plastic member of tubular shape so as to press it against the inner molding surface which is heated. Inflatable devices are molded into the desired size and shape, then cooled and deflated to remove it from the mold. The patent states that, while the balloon of the present invention is especially suitable for forming prism-like balloons, it can also be used for forming balloons of a wide variety of sizes and shapes.

A particular improvement in the catheter art with respect to this patent, namely U.S. Pat. No. 4,706,670, is the use of a coaxial catheter with inner and outer tubing formed and reinforced by continuous helical filaments. Such filaments cross each other causing the shaft of the balloon to become shorter in length while the moving portion of the shank becomes longer in length. By suitably balancing the lengths and the angle of the weave of the balloon and moving portions of the filaments, changes in length can be made to offset each other. Thus, the position of the inner and outer tubing can be adjusted as needed to keep the balloon in a desired position in the blood vessel.

Other disclosures relating to the insertion of inflatable devices for treating the skeleton of patients include the following:

U.S. Pat. No. 4,313,434 relates to the fixation of a long bone by inserting a deflated flexible bladder into a medullary

cavity, inflating the balloon bladder, sealing the interior of the long bone until healing has occurred, then removing the bladder and filling the opening through which the bladder emerges from the long bone.

U.S. Pat. No. 5,102,413 discloses the way in which an inflatable bladder is used to anchor a metal rod for the fixation of a fractured long bone.

Other references which disclose the use of balloons and cement for anchoring of a prosthesis include U.S. Pat. Nos. 5,147,366, 4,892,550, 4,697,584, 4,562,598, and 4,399,814.

A Dutch patent, NL 901858, discloses a means for fracture repair with a cement-impregnated bag which is inflated into a preformed cavity and allowed to harden.

It can be concluded from the foregoing review of the prior art that there is little or no substantive information on inflatable devices used to create cavities in bone. It does not teach the shape of the balloon which creates a cavity that best supports the bone when appropriately filled. It does not teach how to prevent balloons from being spherical when inflated, when this is desired. Current medical balloons can compress bone but are too small and generally have the wrong configuration and are generally not strong enough to accomplish adequate cavity formation in either the vertebral bodies or long bones of the body.

U.S. Pat. Nos. 4,969,888 and 5,108,404 disclose a checker-shaped balloon for compressing cancellous bone, but does not provide information on how this balloon remains in its shape when inflated.

Thus, the need continues for an improved inflatable device for use with pathological bones and the treatment thereof.

SUMMARY OF THE INVENTION

The present invention is directed to a balloon-like inflatable device or balloon for use in carrying out the apparatus and method of the above-mentioned U.S. Pat. Nos. 4,969,888 and 5,108,404. Such inflatable devices, hereinafter sometimes referred to as balloons, have shapes for compressing cancellous bone and marrow (also known as medullary bone or trabecular bone) against the inner cortex of bones whether the bones are fractured or not.

In particular, the present invention is directed to a balloon for use in treating a bone predisposed to fracture or to collapse. The balloon comprises an inflatable, non-expandable balloon body for insertion into said bone. The body has a predetermined shape and size when substantially inflated sufficient to compress at least a portion of the inner cancellous bone to create a cavity in the cancellous bone and to restore the original position of the outer cortical bone, if fractured or collapsed. The balloon body is restrained to create said predetermined shape and size so that the fully inflated balloon body is prevented from applying substantial pressure to the inner surface of the outer cortical bone if said bone is unfractured or uncollapsed.

In addition to the shape of the inflatable device itself, another aspect of importance is the construction of the wall or walls of the balloon such that proper inflation the balloon body is achieved to provide for optimum compression of all the bone marrow. The material of the balloon is also desirably chosen so as to be able to fold the balloon so that it can be inserted quickly and easily into a bone using a guide pin and a cannula, yet can also withstand high pressures when inflated. The balloon can also include optional ridges or indentations which are left in the cavity after the balloon has been removed, to enhance the stability of the filler. Also, the inflatable device can be made to have an optional, built-in suction catheter. This is used to remove any fat or fluid extruded from the bone during balloon inflation in the bone. Also, the balloon body can be protected from puncture by the cortical bone or canula by being covered while inside the canula with an optional protective sleeve of suitable material, such as Kevlar or PET or other polymer or substance that can protect the balloon. The main purpose of the inflatable device, therefore, is the forming or enlarging of a cavity or passage in a bone, especially in, but not limited to, vertebral bodies.

The primary object of the present invention is to provide an improved balloon-like inflatable device for use in carrying out a surgical protocol of cavity formation in bones to enhance the efficiency of the protocol, to minimize the time prior to performing the surgery for which the protocol is designed and to improve the clinical outcome. These balloons approximate the inner shape of the bone they are inside of in order to maximally compress cancellous bone. They have additional design elements to achieve specific clinical goals. Preferably, they are made of inelastic material and kept in their defined configurations when inflated, by various restraints, including (but not limited to) use of inelastic materials in the balloon body, seams in the balloon body created by bonding or fusing separate pieces of material together, or by fusing or bonding together opposing sides of the balloon body, woven material bonded inside or outside the balloon body, strings or bands placed at selected points in the balloon body, and stacking balloons of similar or different sizes or shapes on top of each other by gluing or by heat fusing them together. Optional ridges or indentations created by the foregoing structures, or added on by bonding additional material, increases stability of the filler. Optional suction devices, preferably placed so that if at least one hole is in the lowest point of the cavity being formed, will allow the cavity to be cleaned before filling.

Among the various embodiments of the present invention are the following:

1. A doughnut (or torus) shaped balloon with an optional built-in suction catheter to remove fat and other products extruded during balloon expansion.

2. A balloon with a spherical outer shape surrounded by a ring-shaped balloon segment for body cavity formation.

3. A balloon which is kidney bean shaped in configuration. Such a balloon can be constructed in a single layer, or several layers stacked on top of each other.

4. A spherically shaped balloon approximating the size of the head of the femur (i.e. the proximal femoral epiphysis). Such a balloon can also be a hemisphere.

5. A balloon in the shape of a humpbacked banana or a modified pyramid shape approximating the configuration of the distal end of the radius (i.e. the distal radial epiphysis and metaphysis).

6. A balloon in the shape of a cylindrical ellipse to approximate the configuration of either the medial half or the lateral half of the proximal tibial epiphysis. Such a balloon can also be constructed to approximate the configuration of both halves of the proximal tibial epiphysis.

7. A balloon in the shape of sphere on a base to approximate the shape of the proximal humeral epiphysis and metaphysis with a plug to compress cancellous bone into the diaphysis, sealing it off.

8. A balloon device with optional suction device.

9. Protective sheaths to act as puncture guard members optionally covering each balloon inside its catheter.

The present invention, therefore, provides improved, inflatable devices for creating or enlarging a cavity or

passage in a bone wherein the devices are inserted into the bone. The configuration of each device is defined by the surrounding cortical bone and adjacent internal structures, and is designed to occupy about 70–90% of the volume of the inside of the bone, although balloons that are as small as about 40% and as large as about 99% are workable for fractures. In certain cases, usually avascular necrosis, the balloon size may be as small as 10% of the cancellous bone volume of the area of bone being treated, due to the localized nature of the fracture or collapse. The fully expanded size and shape of the balloon is limited by additional material in selected portions of the balloon body whose extra thickness creates a restraint as well as by either internal or external restraints formed in the device including, but not limited to, mesh work, a winding or spooling of material laminated to portions of the balloon body, continuous or non-continuous strings across the inside held in place at specific locations by glue inside or by threading them through to the outside and seams in the balloon body created by bonding two pieces of body together or by bonding opposing sides of a body through glue or heat. Spherical portions of balloons may be restrained by using inelastic materials in the construction of the balloon body, or may be additionally restrained as just described. The material of the balloon is preferably a non-elastic material, such as polyethylene tetraphthalate (PET), Kevlar or other patented medical balloon materials. It can also be made of semi-elastic materials, such as silicone or elastic material such as latex, if appropriate restraints are incorporated. The restraints can be made of a flexible, inelastic high tensile strength material including, but not limited, to those described in U.S. Pat. No. 4,706,670. The thickness of the balloon wall is typically in the range of $^{2}/_{1000}$ths to $^{25}/_{1000}$ths of an inch, or other thicknesses that can withstand pressures of up to 250–400 psi.

A primary goal of percutaneous vertebral body augmentation of the present invention is to provide a balloon which can create a cavity inside the vertebral body whose configuration is optimal for supporting the bone. Another important goal is to move the top of the vertebral body back into place to retain height where possible, however, both of these objectives must be achieved without fracturing the cortical wall of the vertebral body. This feature could push vertebral bone toward the spinal cord, a condition which is not to be desired.

The present invention satisfies these goals through the design of inflatable devices to be described. Inflating such a device compresses the calcium-containing soft cancellous bone into a thin shell that lines the inside of the hard cortical bone creating a large cavity.

At the same time, the biological components (red blood cells, bone progenitor cells) within the soft bone are pressed out and removed by rinsing during the procedure. The body recreates the shape of the inside of an unfractured vertebral body, but optimally stops at approximately 70 to 90% of the inner volume. The balloons of the present invention are inelastic, so maximally inflating them can only recreate the predetermined shape and size. However, conventional balloons become spherical when inflated. Spherical shapes will not allow the hardened bone cement to support the spine adequately, because they make single points of contact on each vertebral body surface (the equivalent of a circle inside a square, or a sphere inside a cylinder). The balloons of the present invention recreate the flat surfaces of the vertebral body by including restraints that keep the balloon in the desired shape. This maximizes the contacts between the vertebral body surfaces and the bone cement, which strengthens the spine. In addition, the volume of bone cement that fills these cavities creates a thick mantle of cement (4 mm or greater), which is required for appropriate compressive strength. Another useful feature, although not required, are ridges in the balloons which leave their imprint in the lining of compressed cancellous bone. The resulting bone cement "fingers" provide enhanced stability.

The balloons which optimally compress cancellous bone in vertebral bodies are the balloons listed as balloon types 1, 2 and 3 above. These balloons are configured to approximate the shape of the vertebral body. Since the balloon is chosen to occupy 70 to 90% of the inner volume, it will not exert undue pressure on the sides of the vertebral body, thus the vertebral body will not expand beyond its normal size (fractured or unfractured). However, since the balloon has the height of an unfractured vertebral body, it can move the top, which has collapsed, back to its original position.

A primary goal of percutaneous proximal humeral augmentation is to create a cavity inside the proximal humerus whose configuration is optimal for supporting the proximal humerus. Another important goal is to help realign the humeral head with the shaft of the humerus when they are separated by a fracture. Both of these goals must be achieved by exerting pressure primarily on the cancellous bone, and not the cortical bone. Undue pressure against the cortical bone could conceivably cause a worsening of a shoulder fracture by causing cortical bone fractures.

The present invention satisfies these goals through the design of the inflatable devices to be described. Inflating such a device compresses the cancellous bone against the cortical walls of the epiphysis and metaphysis of the proximal humerus thereby creating a cavity. In some cases, depending on the fracture location, the balloon or inflatable device may be used to extend the cavity into the proximal part of the humeral diaphysis.

Due to the design of the "sphere on a stand " balloon (described as number 7 above), the cavity made by this balloon recreates or approximates the shape of the inside cortical wall of the proximal humerus. The approximate volume of the cavity made by the "spherical on a stand balloon" is 70 to 90% that of the proximal humeral epiphysis and metaphysis, primarily, but not necessarily exclusive of, part of the diaphysis. The shape approximates the shape of the humeral head. The "base" is designed to compress the trabecular bone into a "plug" of bone in the distal metaphysis or proximal diaphysis. This plug of bone will prevent the flow of injectable material into the shaft of the humerus, improving the clinical outcome. The sphere can also be used without a base.

A primary goal of percutaneous distal radius augmentation is to create a cavity inside the distal radius whose configuration is optimal for supporting the distal radius. Another important goal is to help fine tune fracture realignment after the fracture has been partially realigned by finger traps. Both of these goals must be achieved by exerting pressure primarily on the cancellous bone and not on the cortical bone. Excessive pressure against the cortical bone could conceivably cause cortical bone fractures, thus worsening the condition.

The present invention satisfies these goals through the design of inflatable devices either already described or to be described.

The design of the "humpbacked banana", or modified pyramid design (as described as number 5 above), approximates the shape of the distal radius and therefore, the cavity made by this balloon approximates the shape of the distal radius as well. The approximate volume of the cavity to be

made by this humpbacked banana shaped balloon is 70 to 90% that of the distal radial epiphysis and metaphysis primarily of, but not necessarily exclusive of, some part of the distal radial diaphysis. Inflating such a device compresses the cancellous bone against the cortical walls of the epiphysis and metaphysis of the distal radius in order to create a cavity. In some cases, depending on the fracture location, the osseous balloon or inflatable device may be used to extend the cavity into the distal part of the radial diaphysis.

A primary goal of percutaneous femoral head (or humeral head) augmentation is to create a cavity inside the femoral head (or humeral head) whose configuration is optimal for supporting the femoral head. Another important goal is to help compress avascular (or aseptic) necrotic bone or support avascular necrotic bone is the femoral head. This goal may include the realignment of avascular bone back into the position it previously occupied in the femoral head in order to improve the spherical shape of the femoral head. These goals must be achieved by exerting pressure primarily on the cancellous bone inside the femoral head.

The present invention satisfied these goals through the design of inflatable devices either already described or to be described.

The design of the spherical osseous balloon (described as balloon type 4 above) approximates the shape of the femoral head and therefore creates a cavity which approximates the shape of the femoral head as well. (It should be noted that the spherical shape of this inflatable device also approximates the shape of the humeral head and would, in fact, be appropriate for cavity formation in this osseous location as well.) Inflating such a device compresses the cancellous bone of the femoral head against its inner cortical walls in order to create a cavity. In some cases, depending upon the extent of the avascular necrosis, a smaller or larger cavity inside the femoral head will be formed. In some cases, if the area of avascular necrosis is small, a small balloon will be utilized which might create a cavity only 10 to 15% of the total volume of the femoral head. If larger areas of the femoral head are involved with the avascular necrosis, then a larger balloon would be utilized which might create a much larger cavity, approaching 80 to 90% of the volume of the femoral head.

The hemispherical balloon approximates the shape of the top half of the femoral (and humeral) head, and provides a means for compacting cancellous bone in an area of avascular necrosis or small fracture without disturbing the rest of the head. This makes it easier to do a future total joint replacement if required.

A primary goal of percutaneous proximal tibial augmentation is to create a cavity inside the proximal tibia whose configuration is optimal for supporting either the medial or lateral tibial plateaus. Another important goal is to help realign the fracture fragments of tibial plateau fractures, particularly those features with fragments depressed below (or inferior to) their usual location. Both of these objectives must be achieved by exerting pressure on primarily the cancellous bone and not the cortical bone. Pressure on the cortical bone could conceivably cause worsening of the tibial plateau fracture.

The present invention satisfies these goals through the design of the inflatable devices to be described. Inflating such a device compresses the cancellous bone against the cortical walls of the medial or lateral tibial plateau in order to create a cavity.

Due to the design of the "elliptical cylinder" balloon (described as balloon type 6 above) the cavity made by this balloon recreates or approximates the shape of the cortical walls of either the medial or lateral tibial plateaus. The approximate volume of the cavity to be made by the appropriate elliptical cylindrical balloon is 50 to 90% of the proximal epiphyseal bone of either the medial half or the lateral half of the tibial.

Other objects of the present invention will become apparent as the following specification progresses, reference being had to the accompanying drawings for an illustration of the invention.

BRIEF DESCRIPTION OF THE DRAWINGS

FIG. 1 is a perspective view of a first embodiment of the balloon of the present invention, the embodiment being in the shape of a stacked doughnut assembly;

FIG. 2 is a vertical section through the balloon of FIG. 1 showing the way in which the doughnut portions of the balloon of FIG. 1, fit into a cavity of a vertebral body;

FIG. 3 is a schematic view of another embodiment of the balloon of the present invention showing three stacked balloons and string-like restraints for limiting the expansion of the balloon in directions of inflation;

FIG. 4 is a top plan view of a spherical balloon having a cylindrical ring surrounding the balloon;

FIG. 5 is a vertical section through the spherical balloon and ring of FIG. 4;

FIG. 6 shows an oblong-shaped balloon with a catheter extending into the central portion of the balloon;

FIG. 6A is a perspective view of the way in which a catheter is arranged relative to the inner tubes for inflating the balloon of FIG. 6;

FIG. 7 is a suction tube and a contrast injection tube for carrying out the inflation of the balloon and removal of debris caused by expansion from the balloon itself;

FIG. 8 is a vertical section through a balloon after it has been deflated and as it is being inserted into the vertebral body of a human;

FIGS. 9 and 9A are side elevational views of a cannula showing how the protective sleeve or guard member expands when leaving the cannula;

FIG. 9B is a vertical section through a vertebral bone into which an access hole has been drilled;

FIG. 10 is a perspective view of another embodiment of the balloon of the present invention formed in the shape of a kidney bean;

FIG. 11 is a perspective view of the vertebral bone showing the kidney shaped balloon of FIG. 10 inserted in the bone and expanded;

FIG. 12 is a top view of a kidney shaped balloon formed of several compartments by a heating element or branding tool;

FIG. 13 is a cross-sectional view taken along line 13—13 of FIG. 12 but with two kidney shaped balloons that have been stacked.

FIG. 14 is a view similar to FIG. 11 but showing the stacked kidney shaped balloon of FIG. 13 in the vertebral bone;

FIG. 15 is a top view of a kidney balloon showing outer tufts holding inner strings in place interconnecting the top and bottom walls of the balloon;

FIG. 16 is a cross sectional view taken along lines 16—16 of FIG. 15;

FIG. 17A is a dorsal view of a humpback banana balloon in a right distal radius;

FIG. 17B is a cross sectional view of FIG. 17A taken along line 17B—17B of FIG. 17A;

FIG. 18 is a spherical balloon with a base in a proximal humerus viewed from the front (anterior) of the left proximal humerus;

FIG. 19A is the front (anterior) view of the proximal tibia with the elliptical cylinder balloon introduced beneath the medial tibial plateau;

FIG. 19B is a three quarter view of the balloon of FIG. 19A;

FIG. 19C is a side elevational view of the balloon of FIG. 19A;

FIG. 19D is a top plan view of the balloon of FIG. 19A;

FIG. 20 is a spherically shaped balloon for treating avascular necrosis of the head of the femur (or humerus) as seen from the front (anterior) of the left hip; and

FIG. 20A is a side view of a hemispherically shaped balloon for treating avascular necrosis of the head of the femur (or humerus).

DETAILED DESCRIPTION OF THE PREFERRED EMBODIMENT

Balloons for Vertebral Bodies

A first embodiment of the balloon (FIG. 1) of the present invention is broadly denoted by the numeral **10** and includes a balloon body **11** having a pair of hollow, inflatable, non-expandable parts **12** and **14** of flexible material, such as PET or Kevlar. Parts **12** and **14** have a suction tube **16** therebetween for drawing fats and other debris by suction into tube **16** for transfer to a remote disposal location. Catheter **16** has one or more suction holes so that suction may be applied to the open end of tube **16** from a suction source (not shown).

The parts **12** and **14** are connected together by an adhesive which can be of any suitable type. Parts **12** and **14** are doughnut-shaped as shown in FIG. **1** and have tubes **18** and **20** which communicate with and extend away from the parts **12** and **14**, respectively, to a source of inflating liquid under pressure (not shown). The liquid can be any sterile biocompatible solution. The liquid inflates the balloon **10**, particularly parts **12** and **14** thereof after the balloon has been inserted in a collapsed condition (FIG. **8**) into a bone to be treated, such as a vertebral bone **22** in FIG. **2**. The above-mentioned U.S. Pat. Nos. 4,969,888 and 5,108,404 disclose the use of a guide pin and cannula for inserting the balloon into bone to be treated when the balloon is deflated and has been inserted into a tube and driven by the catheter into the cortical bone where the balloon is inflated.

FIG. **8** shows a deflated balloon **10** being inserted through a cannula **26** into bone. The balloon in cannula **26** is deflated and is forced through the cannula by exerting manual force on the catheter **21** which extends into a passage **28** extending into the interior of the bone. The catheter is slightly flexible but is sufficiently rigid to allow the balloon to be forced into the interior of the bone where the balloon is then inflated by directing fluid into tube **88** whose outlet ends are coupled to respective parts **12** and **14**.

In use, balloon **10** is initially deflated and, after the bone to be filled with the balloon has been prepared to receive the balloon with drilling, the deflated balloon is forced into the bone in a collapsed condition through cannula **26**. The bone is shown in FIG. **2**. The balloon is oriented preferably in the bone such that it allows minimum pressure to be exerted on the bone marrow and/or cancellous bone if there is no fracture or collapse of the bone. Such pressure will compress the bone marrow and/or cancellous bone against the inner wall of the cortical bone, thereby compacting the bone marrow of the bone to be treated and to further enlarge the cavity in which the bone marrow is to be replaced by a biocompatible, flowable bone material.

The balloon is then inflated to compact the bone marrow and/or cancellous bone in the cavity and, after compaction of the bone marrow and/or cancellous bone, the balloon is deflated and removed from the cavity. While inflation of the balloon and compaction occurs, fats and other debris are sucked out of the space between and around parts **12** and **14** by applying a suction force to catheter tube **16**. Following this, and following the compaction of the bone marrow, the balloon is deflated and pulled out of the cavity by applying a manual pulling force to the catheter tube **21**.

The second embodiment of the inflatable device of the present invention is broadly denoted by the numeral **60** and is shown in FIGS. **4** and **5**. Balloon **60** includes a central spherical part **62** which is hollow and which receives an inflating liquid under pressure through a tube **64**. The spherical part is provided with a spherical outer surface **66** and has an outer periphery which is surrounded substantially by a ring shaped part **68** having tube segments **70** for inflation of part **68**. A pair of passages **69** interconnect parts **62** and **68**. A suction tube segment **72** draws liquid and debris from the bone cavity being formed by the balloon **60**.

Provision can be made for a balloon sleeve **71** for balloon **60** and for all balloons disclosed herein. A balloon sleeve **71** (FIG. **9**) is shiftably mounted in an outer tube **71***a* and can be used to insert the balloon **60** when deflated into a cortical bone. The sleeve **71** has resilient fingers **71***b* which bear against the interior of the entrance opening **71***c* of the vertebral bone **22** (FIG. **9A**) to prevent tearing of the balloon. Upon removal of the balloon sleeve, liquid under pressure will be directed into tube **64** which will inflate parts **62** and **68** so as to compact the bone marrow within the cortical bone. Following this, balloon **60** is deflated and removed from the bone cavity.

FIGS. **6** and **6A** show several views of a modified doughnut shape balloon **80** of the type shown in FIGS. **1** and **2**, except the doughnut shapes of balloon **80** are not stitched onto one another. In FIG. **6**, balloon **80** has a pear-shaped outer convex surface **82** which is made up of a first hollow part **84** and a second hollow part **85**. A tube **88** is provided for directing liquid into the two parts along branches **90** and **92** to inflate the parts after the parts have been inserted into the medullary cavity of a bone. A catheter tube **16** is inserted into the space **96** between two parts of the balloon **80**. An adhesive bonds the two parts **84** and **85** together at the interface thereof.

FIG. **6A** shows the way in which the catheter tube **16** is inserted into the space or opening **96** between the two parts of the balloon **80**.

FIG. **7** shows tube **88** of which, after directing inflating liquid into the balloon **80**, can inject contrast material into the balloon **80** so that x-rays can be taken of the balloon with the inflating material therewithin to determine the proper placement of the balloon. Tube **16** is also shown in FIG. **6**, it being attached in some suitable manner to the outer side wall surface of tube **88**.

Still another embodiment of the invention is shown in FIG. **3** which is similar to FIG. **1** except that it is round and not a doughnut and includes an inflatable device **109** having three balloon units **110**, **112** and **114** which are inflatable and which have string-like restraints **117** which limit the expansion of the balloon units in a direction transverse to the longitudinal axes of the balloon units. The restraints are made of the same or similar material as that of the balloon

so that they have some resilience but substantially no expansion capability.

A tube system **115** is provided to direct liquid under pressure into balloon units **110**, **112** and **114** so that liquid can be used to inflate the balloon units when placed inside the bone in a deflated state. Following the proper inflation and compaction of the bone marrow, the balloon can be removed by deflating it and pulling it outwardly of the bone being treated. The restraints keep the opposed sides **77** and **79** substantially flat and parallel with each other.

In FIG. **10**, another embodiment of the inflatable balloon is shown. The device is a kidney shaped balloon body **130** having a pair of opposed kidney shaped side walls **132** which are adapted to be collapsed and to cooperate with a continuous end wall **134** so that the balloon **130** can be forced into a bone **136** shown in FIG. **11**. A tube **138** is used to direct inflating liquid into the balloon to inflate the balloon and cause it to assume the dimensions and location shown vertebral body **136** in FIG. **11**. Device **130** will compress the cancellous bone if there is no fracture or collapse of the cancellous bone. The restraints for this action are due to the side and end walls of the balloon.

FIG. **12** shows a balloon **140** which is also kidney shaped and has a tube **142** for directing an inflatable liquid into the tube for inflating the balloon. The balloon is initially a single chamber bladder but the bladder can be branded along curved lines or strips **141** to form attachment lines **144** which take the shape of side-by-side compartments **146** which are kidney shaped as shown in FIG. **13**. The branding causes a welding of the two sides of the bladder to occur since the material is standard medical balloon material, which is similar to plastic and can be formed by heat.

FIG. **14** is a perspective view of a vertebral body **147** containing the balloon of FIG. **12**, showing a double stacked balloon **140** when it is inserted in vertebral bone **147**.

FIG. **15** is a view similar to FIG. **10** except that tufts **155**, which are string-like restraints, extend between and are connected to the side walls **152** of inflatable device **150** and limit the expansion of the side walls with respect to each other, thus rendering the side walls generally parallel with each other. Tube **88** is used to fill the kidney shaped balloon with an inflating liquid in the manner described above.

The dimensions for the vertebral body balloon will vary across a broad range. The heights (H, FIG. **11**) of the vertebral body balloon for both lumbar and thoracic vertebral bodies typically range from 0.5 cm to 3.5 cm. The anterior to posterior (A, FIG. **11**) vertebral body balloon dimensions for both lumbar and thoracic vertebral bodies range from 0.5 cm to 3.5 cm. The side to side (L, FIG. **11**) vertebral body dimensions for thoracic vertebral bodies will range from 0.5 cm to 3.5 cm. The side to side vertebral body dimensions for lumbar vertebral bodies will range from 0.5 cm to 5.0 cm.

The eventual selection of the appropriate balloon for, for instance, a given vertebral body is based upon several factors. The anterior-posterior (A-P) balloon dimension for a given vertebral body is selected from the CT scan or plain film x-ray views of the vertebral body. The A-P dimension is measured from the internal cortical wall of the anterior cortex to the internal cortical wall of the posterior cortex of the vertebral body. In general, the appropriate A-P balloon dimension is 5 to 7 millimeters less than this measurement.

The appropriate side to side balloon dimensions for a given vertebral body is selected from the CT scan or from a plain film x-ray view of the vertebral body to be treated. The side to side distance is measured from the internal cortical walls of the side of the vertebral bone. In general, the appropriate side to side balloon dimension is 5 to 7 millimeters less than this measurement by the addition of the lumbar vertebral body tends to be much wider than side to side dimension then their A-P dimension. In thoracic vertebral bodies, the side to side dimension and their A-P dimensions are almost equal.

The height dimensions of the appropriate vertebral body balloon for a given vertebral body is chosen by the CT scan or x-ray views of the vertebral bodies above and below the vertebral body to be treated. The height of the vertebral bodies above and below the vertebral body to be treated are measured and averaged. This average is used to determine the appropriate height dimension of the chosen vertebral body balloon.

Balloons for Long Bones

Long bones which can be treated with the use of balloons of the present invention include distal radius (larger arm bone at the wrist), proximal tibial plateau (leg bone just below the knee), proximal humerus (upper end of the arm at the shoulder), and proximal femoral head (leg bone in the hip).

Distal Radius Balloon

For the distal radius, a balloon **160** is shown in the distal radius **152** and the balloon has a shape which approximates a pyramid but more closely can be considered the shape of a humpbacked banana in that it substantially fills the interior of the space of the distal radius to force cancellous bone **154** lightly against the inner surface **156** of cortical bone **158**.

The balloon **160** has a lower, conical portion **159** which extends downwardly into the hollow space of the distal radius **152**, and this conical portion **159** increases in cross section as a central distal portion **161** is approached. The cross section of the balloon **160** is shown at a central location (FIG. **17B**) and this location is near the widest location of the balloon. The upper end of the balloon, denoted by the numeral **162**, converges to the catheter **88** for directing a liquid into the balloon for inflating the same to force the cancellous bone against the inner surface of the cortical bone. The shape of the balloon **160** is determined and restrained by tufts formed by string restraints **165**. These restraints are optional and provide additional strength to the balloon body **160**, but are not required to achieve the desired configuration. The balloon is placed into and taken out of the distal radius in the same manner as that described above with respect to the vertebral bone.

The dimensions of the distal radius balloon vary as follows:

- The proximal end of the balloon (i.e. the part nearest the elbow) is cylindrical in shape and will vary from 0.5×0.5 cm to 1.8×1.8 cm.
- The length of the distal radius balloon will vary from 1.0 cm to 12.0 cm.
- The widest medial to lateral dimension of the distal radius balloon, which occurs at or near the distal radio-ulnar joint, will measure from 1.0 cm to 2.5 cm.
- The distal anterior-posterior dimension of the distal radius balloon will vary from 0.5 to 3.0 cm.

Proximal Humerus Fracture Balloon

The selection of the appropriate balloon size to treat a given fracture of the distal radius will depend on the radiological size of the distal radius and the location of the fracture.

In the case of the proximal humerus **169**, a balloon **166** shown in FIG. **18** is spherical and has a base design. It compacts the cancellous bone **168** in a proximal humerus **169**. A mesh **170**, embedded or laminated and/or winding, may be used to form a neck **172** on the balloon **166**, and

second mesh **170***a* may be used to conform the bottom of the base **172***a* to the shape of the inner cortical wall at the start of the shaft. These restraints provide additional strength to the balloon body, but the configuration can be achieved through molding of the balloon body. This is so that the cancellous bone will be as shown in the compacted region surrounding the balloon **166** as shown in FIG. **18**. The cortical bone **173** is relatively wide at the base **174** and is thin-walled at the upper end **175**. The balloon **166** has a feed tube **177** into which liquid under pressure is forced into the balloon to inflate it to lightly compact the cancellous bone in the proximal humerus. The balloon is inserted into and taken out of the proximal humerus in the same manner as that described above with respect to the vertebral bone.

The dimensions of the proximal humerus fracture balloon vary as follows:

- The spherical end of the balloon will vary from 1.0×1.0 cm to 3.0×3.0 cm.
- The neck of the proximal humeral fracture balloon will vary from 0.8×0.8 cm to 3.0×3.0 cm.
- The width of the base portion or distal portion of the proximal numeral fracture balloon will vary from 0.5× 0.5 cm to 2.5×2.5 cm.
- The length of the balloon will vary from 4.0 cm to 14.0 cm.
- The selection of the appropriate balloon to treat a given proximal humeral fracture depends on the radiologic size of the proximal humerus and the location of the fracture.

Proximal Tibial Plateau Fracture Balloon

The tibial fracture is shown in FIG. **19**A in which a balloon **180** is placed in one side **182** of a tibia **183**. The balloon, when inflated, compacts the cancellous bone in the layer **184** surrounding the balloon **180**. A cross section of the balloon is shown in FIG. **19**C wherein the balloon has a pair of opposed sides **185** and **187** which are interconnected by restraints **188** which can be in the form of strings or flexible members of any suitable construction. The main purpose of the restraints is to make the sides **185** and **187** substantially parallel with each other and non-spherical. A tube **190** is coupled to the balloon **180** to direct liquid into and out of the balloon. The ends of the restraints are shown in FIGS. **19**B and **19**D and denoted by the numeral **191**. The balloon is inserted into and taken out of the tibia in the same manner as that described above with respect to the vertebral bone. FIG. **19**B shows a substantially circular configuration for the balloon; whereas, FIG. **19**D shows a substantially elliptical version of the balloon.

The dimensions of the proximal tibial plateau fracture balloon vary as follows:

- The thickness or height of the balloon will vary from 0.5 cm to 5.0 cm.
- The anterior/posterior (front to back) dimension will vary from 1.0 cm to 6.0 cm.
- The side to side (medial to lateral) dimension will vary from 1.0 cm to 6.0 cm.
- The selection of the appropriate balloon to treat a given tibial plateau fracture will depend on the radiological size of the proximal tibial and the location of the fracture.

Femoral Head Balloon

In the case of the femoral head, a balloon **200** is shown as having been inserted inside the cortical bone **202** of the femoral head which is thin at the outer end **204** of the femur and which can increase in thickness at the lower end **206** of the femur. The cortical bone surrounds the cancellous bone **207** and this bone is compacted by the inflation of balloon **200**. The tube for directing liquid for inflation purposes into the balloon is denoted by the numeral **209**. It extends along the femoral neck and is directed into the femoral head which is generally spherical in configuration. FIG. **20**A shows that the balloon, denoted by the numeral **200***a*, can be hemispherical as well as spherical, as shown in FIG. **20**. The balloon **200** is inserted into and taken out of the femoral head in the same manner as that described with respect to the vertebral bone. The hemispherical shape is maintained in this example by bonding overlapping portions of the bottom, creating pleats **200***b* as shown in FIG. **20**A.

The dimensions of the femoral head balloon vary as follows:

- The diameter of the femoral head balloon will vary from 1.0 cm to up to 4.5 cm. The appropriate size of the femoral head balloon to be chosen depends on the radiological or CT scan size of the head of the femur and the location and size of the avascular necrotic bone. The dimensions of the hemispherical balloon are the same as the those of the spherical balloon, except that approximately one half is provided.

What is claimed is:

1. A method for treating bone comprising the steps of

inserting inside bone a device comprising a body adapted to be inserted into bone and undergo expansion in cancellous bone to compact cancellous bone, the body including material that, during the expansion in cancellous bone, applies a force capable of moving fractured cortical bone, and further includes changes in thickness of the body to constrain the expansion in cancellous bone,

causing constrained expansion of the body in cancellous bone, and

compacting cancellous bone by the constrained expansion.

2. A method for treating bone comprising the steps of

inserting inside bone a device comprising a body adapted to be inserted into bone and undergo expansion in cancellous bone to compact cancellous bone, including the body includes material that, during the expansion in cancellous bone, applies a force capable of moving fractured cortical bone, and further includes an internal restraint coupled to an interior of the body to constrain the expansion in cancellous bone,

causing constrained expansion of the body in cancellous bone, and compacting cancellous bone by the constrained expansion.

3. A method according to claim **2**

wherein the internal restraint includes mesh material.

4. A method according to claim **2**

wherein the internal restraint includes string material.

5. A method according to claim **2**

wherein the internal restraint includes a woven material.

6. A method according to claim **2**

wherein the internal restraint includes a seam.

7. A method according to claim **2**

wherein the internal restraint includes an essentially non-elastic material.

8. A method for treating bone comprising the steps of

inserting inside bone a device comprising a body adapted to be inserted into bone and undergo expansion in cancellous bone to compact cancellous bone, the body including material that, during the expansion in cancellous bone, applies a force capable of moving frac-

tured cortical bone, and further includes an external restraint coupled to an exterior of the body to constrain the expansion in cancellous bone,

causing constrained expansion of the body in cancellous bone, and

compacting cancellous bone by the constrained expansion.

9. A method according to claim 8

wherein the external restraint includes mesh material.

10. A method according to claim 8

wherein the external restraint includes string material.

11. A device according to claim 8

wherein the external restraint includes a woven material.

12. A method according to claim 8

wherein the external restraint includes a seam.

13. A device according to claim 8

wherein the external restraint includes an essentially non-elastic material.

14. A method according to claim 1 or 2 or 8

wherein the material includes an essentially non-elastic material.

15. A method according to claim 1 or 2 or 8

wherein the material includes an essentially semi-elastic material.

16. A method according to claim 1 or 2 or 8

wherein the material includes an essentially elastic material.

17. A method for treating bone comprising the steps of

inserting inside bone a device comprising a body adapted to be inserted into bone and undergo expansion in cancellous bone to compact cancellous bone, the body including at least two materials that, during the expansion in cancellous bone, apply a force capable of moving fractured cortical bone and constrain the expansion in cancellous bone,

causing constrained expansion of the body in cancellous bone, and

compacting cancellous bone by the constrained expansion.

18. A device according to claim 17

wherein the at least two materials possess essentially similar elastic properties.

19. A device according to claim 17

wherein the at least two materials possess essentially different elastic properties.

20. A method according to claim 1 or 2 or 8 or 17

wherein the constrained expansion lifts vertebral end plates.

21. A method according to claim 1 or 2 or 8 or 17

wherein the constrained expansion lifts tibial plateau depressions.

22. A method according to claim 1 or 2 or 8 or 17

wherein the constrained expansion lifts proximal humerus depressions.

23. A method according to claim 1 or 2 or 8 or 17

wherein the constrained expansion lifts cortical bone.

24. A method according to claim 1 or 2 or 8 or 17

wherein the step of compacting forms a cavity.

25. A method according to claim 24

further including the step of filling the cavity with a material.

26. A method according to claim 25

wherein the material comprises bone cement.

27. A method according to claim 25

wherein the material comprises synthetic bone substitute.

28. A method according to claim 25

wherein the material comprises a flowable material that sets to a hardened condition.

* * * * *