UNITED STATES DISTRICT COURT
DISTRICT OF DELAWARE

EVOLVED WIRELESS, LLC,	)	
Plaintiff,	)	
v.	)	C.A. No. 15-545-SLR-SRF
	)	**JURY TRIAL DEMANDED**
SAMSUNG ELECTRONICS CO., LTD. AND SAMSUNG ELECTRONICS AMERICA, INC.,	)	
Defendants.	)	

FIRST AMENDED COMPLAINT FOR PATENT INFRINGEMENT

Plaintiff Evolved Wireless, LLC ("Evolved Wireless"), for its causes of action against Defendants, Samsung Electronics Co., Ltd. and Samsung Electronics America, Inc. (collectively "Samsung"), states and alleges on knowledge and information and belief as follows:

PARTIES

1. Plaintiff Evolved Wireless is a limited liability company organized and existing under the laws of the State of Delaware and having a principal place of business at 805 Las Cimas Parkway, Suite 240, Austin, Texas 78746.

2. On information and belief, Defendant Samsung Electronics Co., Ltd. is a Korean company having its principal place of business at 250 2-ga Taepyung-ro, Chung-gu, Seoul, Korea.

3. On information and belief, Defendant Samsung Electronics America, Inc. is a New York corporation having its principal place of business at 85 Challenger Road, Ridgefield Park, NJ 07660.

4. On information and belief, Samsung Telecommunications America LLC merged with Defendant Samsung Electronics America, Inc. in or around December, 2014. Samsung Telecommunications America LLC was formed as a limited liability company under the laws of Delaware on January 2, 1992, and had its principal place of business at 1301 E Lookout Dr., Richardson, TX 75082. Samsung Telecommunications America LLC designated Corporate Service Company, 2711 Centerville Rd Ste 400, Wilmington, DE 19808 as a registered agent. On information and belief, Samsung Telecommunications America LLC was responsible for the manufacturing, sale, and importation of mobile devices, such as cellular phones, tablets, and other LTE compliant devices, in the United States, including this District. On further information and belief, Defendant Samsung Electronics America, Inc. has taken over these responsibilities for Samsung Telecommunications America LLC.

JURISDICTION

5. This Court has subject matter jurisdiction over this action pursuant to 28 U.S.C. §§ 1331 and 1338(a), in that this action arises under the federal patent statutes, 35 U.S.C. §§ 271 and 281-285.

6. This Court has personal jurisdiction over Samsung. Upon information and belief, Samsung Telecommunications America LLC was a limited liability company organized under Delaware law from 1992 to 2014 and merged with Defendant Samsung Electronics America, Inc., during which time Samsung infringed the Asserted Patents.

7. Upon information and belief, Samsung has committed and continues to commit acts giving rise to this action within Delaware and within this judicial district and Samsung has established minimum contacts within the forum such that the exercise of jurisdiction over Samsung would not offend traditional notions of fair play and substantial justice. For example,

Samsung has committed and continues to commit acts of infringement in this District, by among other things, offering to sell and selling products that infringe Evolved Wireless's LTE Patent Portfolio, as defined below, including smartphones, tablets, and other mobile devices. In conducting its business in Delaware and this judicial district, Samsung derives substantial revenue from infringing products being sold, used, imported, and/or offered for sale or providing service and support to Samsung's customers in Delaware and this District, and will continue to do so unless enjoined by this Court.

VENUE

8. Venue in the District of Delaware is proper pursuant to 28 U.S.C. §§ 1391(b) and (c) and 1400(b) because Samsung has committed acts within this judicial district giving rise to this action, and Samsung has and continues to conduct business in this judicial district, including one or more acts of selling, using, importing, and/or offering for sale infringing products or providing service and support to Samsung's customers in this District.

9. Venue in the District of Delaware is further proper because Evolved Wireless is incorporated in the state of Delaware.

BACKGROUND

10. The Third Generation Partnership Project ("3GPP") develops standards for globally-applicable commercial cellular systems. The Organizational Partners of 3GPP are major telecommunications standards developing organizations from around the world, including the European Telecommunications Standards Institute ("ETSI"), the North American Alliance for Telecommunication Industry Solutions, the Telecommunications Technology Association of Korea, and a few others. Companies participate in 3GPP via their membership in one of the

Organizational Partners. Samsung and LG Electronics, Inc. are members of at least one Organizational Partner, either directly or through their subsidiaries.

11. Global standards establish precise specifications for the essential components of telecommunications systems and are fundamental in allowing products and services from unrelated competitors to be compatible and operate seamlessly with a telecommunications network.

12. The 3GPP standards for cellular wireless communications are known as Releases. Release 8 describes the first version of the Long Term Evolution ("LTE") standard. The LTE standard network includes Evolved Universal Terrestrial Access Network ("E-UTRAN") and a Core Network called Evolved Packet Core.

13. Each Release consists of a series of technical specifications ("TS"). The 3GPP 36 series of technical specifications covers the E-UTRAN, including at least TS 36.211, .300, .321, .331, and .423. Starting with Release 8, LTE has been commercially available in the United States since around 2010.

14. Developing these standards is an iterative process in which industry players compete to find novel solutions to the standard's technical challenges and goals, including increased data rates and throughput, reduced latency, and higher reliability. The member companies participate in 3GPP Working Groups to discuss, vote, and select the most appropriate technology among competing proposals to provide each individual function within the standard. Therefore, technologies patented by the members become part of the 3GPP standards.

15. 3GPP participants must abide by the intellectual property rights ("IPR") policy of the Organizational Partners to which they belong. These IPR policies, such as the ETSI IPR policy, are intended to strike "a balance between the needs of standardization for public use in

the field of telecommunications and the rights of the owners of IPRs."[1] "IPR holders whether members of ETSI and their AFFILIATES or third parties, should be adequately and fairly rewarded for the use of their IPRs in the implementation of STANDARDS and TECHNICAL SPECIFICATIONS."[2]

16. 3GPP participants are required to disclose intellectual property (including patents and patent applications) owned by them which they believe are or are likely to become essential, or might be essential, to any 3GPP standard, including LTE. Companies are also required by IPR policies to license their intellectual property on terms that are fair, reasonable, and non-discriminatory ("FRAND").[3] These policies bind all successors-in-interest to license essential intellectual property on FRAND terms.[4]

EVOLVED WIRELESS

17. Evolved Wireless restates and realleges each of the allegations set forth above and incorporates them herein.

18. Evolved Wireless owns, through assignments originating with LG Electronics, Inc. ("LG"), a standard-essential patent portfolio relating to LTE wireless communication systems. The portfolio, which includes United States Patent Nos. 7,746,916, 7,768,965, 7,809,373, 7,881,236, and 8,218,481 (collectively referred to herein as "LTE Patent Portfolio"), is essential to the 3GPP 36 Series technical specifications, including at least TS 36.211, .300, .321, .331, and .423.

---

[1] ETSI Rules of Procedure, Annex 6: ETSI Intellectual Property Rights Policy § 3.1 (2014), *available at* http://www.etsi.org/images/files/IPR/etsi-ipr-policy.pdf.
[2] *Id*. § 3.2.
[3] *Id*. § 6.1.
[4] *Id*. § 6.1bis.

19. As an ETSI member, LG extensively participated in 3GPP Working Group meetings to develop the LTE standards. LG submitted numerous proposals for incorporation into the standards, and LG's research and development efforts solved significant technical challenges facing the standards. The LTE Patent Portfolio claims several of LG's technical solutions that solve technical challenges in wireless telecommunications technology.

20. Evolved Wireless continues to innovate and contribute additional inventions to the LTE wireless communication system.

OVERVIEW OF MOBILE TELECOMMUNICATIONS

21. Mobile (cellular) phones and devices allow users to make or receive telephone calls and transmit and receive data wirelessly over a wide geographical area.

22. Around 1980, first generation ("1G") mobile phones were introduced to the public. These phones used analog modulation techniques, specifically frequency division multiple access, to transmit voice calls.

23. In the 1990s, second generation ("2G") phones emerged. These phones used digital technology, which permitted more efficient use of the radio spectrum than their 1G predecessor. While second generation systems were originally designed only for voice, they were later enhanced to include data transmission, but could only achieve low data rates.

24. During the same time period of growth for 2G communications systems, overall use of the Internet also increased. In response to user demand for higher data rates, third generation ("3G") phones emerged.

25. While voice calls traditionally dominated the traffic in mobile communications, the increasing number of mobile devices and the advancement of mobile device technology with increased features and data-hungry applications drove demand for faster and more reliable data

transmissions. Data traffic over cellular networks has therefore increased dramatically since the mid to late 2000s.

26. Given the increased demand for data, coupled with limited available radio spectrum, mobile communication developers were required to create a standard that, compared with 3G, offered much higher data rates, lower latency, and improved overall user experience. LTE is the result of this development.

EVOLVED WIRELESS'S STANDARD-ESSENTIAL LTE PATENT PORTFOLIO

27. Evolved Wireless's LTE Patent Portfolio is rooted in mobile telecommunications technology and solves particular problems arising in wireless cellular communications between mobile devices and cellular networks.

28. The above-mentioned benefits of LTE, such as higher throughput and lower latency, could be achieved only after significant challenges were overcome. These challenges included at least interference management and signal processing. The LTE Patent Portfolio addresses some of these challenges and offers specific solutions to improve mobile device functionality over the prior art with faster, more reliable, and more efficient voice and data transmissions.

UNITED STATES PATENT NO. 7,746,916 ("THE '916 PATENT")

29. United States Patent No. 7,746,916 ("the '916 Patent"), entitled "Method and Apparatus for Generating and Transmitting Code Sequence in a Wireless Communication System," was issued on June 29, 2010. Evolved Wireless is the owner and assignee of the '916 Patent.

30. On November 29, 2006, the '916 Patent inventors assigned the entire right, title, and interest of the '916 Patent to LG, which was duly recorded in the U.S. Patent and Trademark

Office ("USPTO") on March 15, 2007. LG assigned the entire right, title, and interest of the '916 Patent to TQ Lambda LLC on February 7, 2014, which was duly recorded in the USPTO on March 4, 2014. On September 26, 2014, TQ Lambda LLC assigned the entire right, title, and interest of the '916 Patent to Evolved Wireless, which was duly recorded in the USPTO on October 27, 2014.

31. The '916 patented technology relates to a technique for obtaining a plurality of code sequences with certain properties that results in an improved telecommunication system to overcome limitations rooted in prior art telecommunication system technology. Obtaining code sequences in the way claimed by the '916 Patent is fundamental to the operation of LTE and is used in several aspects, including random access preambles and uplink reference signals.

32. Among other limitations, the method for sequence generation in 3G systems resulted in a limited number of different code sequences. Because the number of code sequences was limited, telecommunication systems either had a higher level of interference or were only able to serve a limited number of mobile phones for a particular base station. This shortcoming is addressed by the '916 patented technology.

33. The '916 Patent describes the state of the art where "a pilot signal or preamble of a wireless communication system is referred to as a reference signal used for initial synchronization, cell search, and channel estimation. Further, the preamble is comprised of a code sequence, and the code sequence is further comprised of orthogonal or quasi-orthogonal [codes] which represent good correlation properties." (Ex. 1, 1:20-26.)

34. The '916 Patent further describes the problems associated with prior art code sequences. "Although the [Hadamard] code sequence and a poly-phase Constant Amplitude Zero

Auto-Correlation (CAZAC) code sequence are orthogonal codes, [the] number of codes used to maintain orthogonality is limited." (*Id.* at 1:31-34.)

35. Thus, the '916 Patent solved at least one particular problem arising from synchronizing mobile devices to cell towers using code sequences. "Accordingly, the ['916 patent] is directed to a method and apparatus for generating and transmitting code sequence in a wireless communication system that substantially obviates one or more problems due to limitations and disadvantages of the related art." (*Id.* at 1:51-55.)

UNITED STATES PATENT NO. 7,768,965 ("THE '965 PATENT")

36. United States Patent No. 7,768,965 ("the '965 Patent"), entitled "Method for Transmitting and Receiving Signals Based on Segmented Access Scheme and Method for Allocating Sequence for the Same," was issued August 3, 2010. Evolved Wireless is the owner and assignee of the '965 Patent.

37. On March 2 and March 9, 2009, the '965 Patent inventors assigned the entire right, title, and interest of the '965 Patent to LG, which was duly recorded in the USPTO on March 13, 2009. LG assigned the entire right, title, and interest of the '965 Patent to TQ Lambda LLC on February 7, 2014, which was duly recorded in the USPTO on March 4, 2014. On September 26, 2014, TQ Lambda LLC assigned the entire right, title, and interest of the '965 Patent to Evolved Wireless, which was duly recorded in the USPTO on October 27, 2014.

38. The '965 patented technology is directed generally to an apparatus and method for transmitting and receiving codes used by mobile devices.

39. In prior art telecommunications systems, as cell size increased, longer preambles were required to accommodate mobile devices farther away from the cell tower. Mobile devices close to the cell tower also used the same longer preamble length. This in part resulted in

increased overhead to telecommunications systems. "For instance, in case that 1 subframe is used as an RACH or a ranging channel in 3GPP LTE system, the system uses $^{1}/_{20}$ of overhead as the RACH or the ranging channel. Yet, if 5 subframes need to be used due to an increased cell size, the overhead increases 5 times to considerably affect overall system performance." (Ex. 2, 3:15-20.)

40. The '965 patented technology addressed this problem by providing a method according to which different mobile devices can use preambles of different length based at least in part on their location within a cell, rather than the size of the cell area. The '965 recognizes that a short sequence can be used by mobile devices in the center of a cell, and a long sequence can be used by mobile devices at the edge of a cell. This reduced the overhead experienced by the telecommunication system while reducing the probability of collision with other mobile devices within a cell.

41. The '965 patent describes collision as one aspect of the technical problems associated with larger cell sizes: when mobile devices (user equipment) "within a large cell use an identically specified sequence, probability of collision in an RACH or ranging channel slot can be raised in proportion to an increasing number of user equipment[] within the corresponding cell." (*Id.* at 3:28-32.) Thus, "the demand for a technology in reducing probability of collision occurrence in the same RACH or ranging channel slot and [reducing] overhead attributed to an RACH or a ranging channel in a large cell has risen." (*Id.* at 3:33-36.)

42. The '965 patent claims at least one technical solution to this particular prior art problem. "An object of the present invention is to reduce probability of collision possible in using an identical sequence by entire user equipment[] within a cell in a manner of providing a

sequence set differently allocated according to a location of a user equipment within a cell." (*Id.* at 4:1-5.)

UNITED STATES PATENT NO. 7,809,373 ("THE '373 PATENT")

43. United States Patent No. 7,809,373 ("the '373 Patent"), entitled "Method of Transmitting and Receiving Radio Access Information in a Wireless Mobile Communication System," was issued on October 5, 2010. Evolved Wireless is the owner and assignee of the '373 Patent.

44. On September 7, 2006, the '373 Patent inventors assigned the entire right, title, and interest of the '373 Patent to LG, which was duly recorded in the USPTO on November 2, 2006. LG assigned the entire right, title, and interest of the '373 Patent to TQ Lambda LLC on February 7, 2014, which was duly recorded in the USPTO on March 4, 2014. On September 26, 2014, TQ Lambda LLC assigned the entire right, title, and interest of the '373 Patent to Evolved Wireless, which was duly recorded in the USPTO on October 27, 2014.

45. The '373 patented technology is directed generally to the handover of a mobile device from one cell tower base station (the source base station) to another cell tower base station (the target base station). Handovers are fundamental to the cellular architecture of wireless telecommunication systems.

46. When a mobile device moves to the coverage area of a new base station, the mobile device must send a signal to establish synchronization and make scheduling requests. The signal includes a random access preamble selected randomly for a limited number of signatures. Problems arise with this prior art handover method. Specifically, the random access message is susceptible to collision and disruption during the handover from, among other things, multiple devices using the same preamble message. As more and more devices enter and leave the cell

area, the likelihood of collision increases. Any collisions will increase service interruption, ultimately reducing the quality and/or availability of service.

47. The ’373 patented technology addresses problems specifically arising out of using a limited number of preambles in a random access process to access a base station as the number of mobile devices within the cell increases. The ’373 patent discloses a mobile device that receives a dedicated preamble supplied by the target base station by means of the source base station. The mobile device uses the dedicated preamble after the handover process to eliminate the likelihood of collision, which can reduce handover processing time and in turn result in a faster and more efficient method of accessing the target base stations.

48. More specifically, the ’373 Patent describes at least one technical problem existing in prior art methods to handover mobile devices (mobile terminals) from one cell tower to another. “In the related art, when the mobile terminal moves from a source cell to a target cell, the mobile terminal uses a RACH to transmit a cell update message to the target cell. However, because of a possibility of RACH collision (i.e. the same signature is being selected from multiple terminals that use of the RACH), the processing time for the handover process may be delayed.” (Ex. 3, 5:51-57.)

49. With this particular prior art problem in mind, the ’373 Patent claims at least one technical solution for providing the mobile device with handover information prior to the actual handover in order to reduce handover processing time. “In contrast [to the prior art], the features of the present invention provide that the terminal receives necessary information from a source cell in advance (i.e., before the terminal transmits a RACH setup request to a network) in order to utilize the RACH in a later step. As a result, the terminal can connect with the target cell with minimal delays.” (*Id.* at 5:58-63.)

UNITED STATES PATENT NO. 7,881,236 ("THE '236 PATENT")

50. United States Patent No. 7,881,236 ("the '236 patent"), entitled "Data Transmission Method and User Equipment for the Same," was issued on February 1, 2011. Evolved Wireless is the owner and assignee of the '236 Patent.

51. On July 29, 2009, the '236 Patent inventors assigned the entire right, title, and interest of the '236 Patent to LG, which was duly recorded in the USPTO on August 13, 2009. LG assigned the entire right, title, and interest of the '236 Patent to TQ Lambda LLC on February 7, 2014, which was duly recorded in the USPTO on March 4, 2014. On September 26, 2014, TQ Lambda LLC assigned the entire right, title, and interest of the '236 Patent to Evolved Wireless, which was duly recorded in the USPTO on October 27, 2014.

52. The '236 Patent avoids problems arising from transmission errors when data stored in a mobile device's Msg3 buffer is transmitted regardless of the reception mode of the Uplink Grant signal. The '236 Patent describes that problems occur "if the data stored in the Msg**3** buffer is transmitted in correspondence with the reception of *all* UL Grant signals." (Ex. 4, 4:30-32 (emphasis added).)

53. The '236 Patent claims at least one technical solution to this particular problem arising in mobile device uplink grants. "An object of the present invention is to provide a data transmission method and a user equipment for the same, which is capable of solving a problem which may occur when data stored in a message **3** (Msg**3**) buffer is transmitted according to a reception mode of an Uplink (UL) Grant signal." (*Id.* at 4:42-47.)

UNITED STATES PATENT NO. 8,218,481 ("THE '481 PATENT")

54. United States Patent No. 8,218,481 ("the '481 Patent"), entitled "Method of Transmitting Data in a Mobile Communication System," was issued on July 10, 2012. Evolved Wireless is the owner and assignee of the '481 Patent.

55. On June 30 and July 6, 2010, the '481 Patent inventors assigned the entire right, title, and interest of the '481 Patent to LG, which was duly recorded in the USPTO on July 7, 2010. LG assigned the entire right, title, and interest of the '481 Patent to TQ Lambda LLC on February 7, 2014, which was duly recorded in the USPTO on March 4, 2014. On September 26, 2014, TQ Lambda LLC assigned the entire right, title, and interest of the '481 Patent to Evolved Wireless, which was duly recorded in the USPTO on October 27, 2014.

56. The '481 patented technology is directed generally to an apparatus and method for creating the preamble of a random access signal so as to address the limitations rooted in the prior art. In prior art systems, a preamble of fixed length was used, limiting flexibility under different cell sizes. The '481 patented technology addresses this problem by providing an apparatus and method where a specific sequence is repeated multiple times and a cyclic prefix is added. The resulting preambles are less susceptible to "noise or channel change." (Ex. 5, 2:49.) The '481 Patent improves the probability of preamble reception by base stations and in turn provides more efficient and reliable cellular connections than prior art systems and methods.

57. The '481 Patent describes a telecommunication system wherein "[a] user equipment uses a random access channel (RACH) to access a network in a state that the user equipment is not uplink synchronized with a base station. A signal having repetitive characteristic in a time domain is used in the random access channel, so that a receiver easily

searches a start position of a transmission signal. In general, the repetitive characteristic is realized by repetitive transmission of a preamble." (*Id.* at 1:24-30.)

58. Further, "[a] representative example of a sequence for realizing the preamble includes a CAZAC (Constant Amplitude Zero Auto Correlation) sequence. . . . [which] has excellent transmission characteristics. However, the CAZAC sequence has limitation[s] in that maximum N-1 number of sequences can be used for a sequence having a length of N." (*Id.* at 1:32-40.)

59. The '481 Patent describes five prior art methods and the associated problems for "transmitting data from a random access channel by using the CAZAC sequence." (*Id.* at 1:45-46; see also 1:46-2:33.) "[T]he first method is to directly interpret CAZAC sequence ID to message information." (*Id.* at 1:46-47.) Problems occur, however, because "there is difficulty in realizing a sufficient number of CAZAC sequence sets, and the costs required for search of a receiver increases." (*Id.* at 1:52-56.)

60. The second and third prior art methods involve either simultaneously transmitting a CAZAC sequence with a Walsh sequence or mixing a CAZAC sequence with a Walsh sequence. (*Id.* at 1:57-59, 2:1-3.) The second method is still limited, however, because "bits of message[s] that can additionally be obtained are only log2N bits when the Walsh sequence has a length of N." (*Id.* at 1:66-67.) Further, the third method encounters problems where "the Walsh sequence acts as noise in detection of the CAZAC sequence [and] cause[s] difficulty in detecting sequence ID." (*Id.* at 2:8-10.)

61. The fourth prior art method involves modifying the code sequence by either "multiplying an exponential term by a CAZAC sequence or directly apply[ing] data modulation," (*Id.* at 2:15-17.), and the fifth method involves "attaching a message part to the

CAZAC sequence." (*Id.* at 2:25-26.) These methods "have a problem in that they are susceptible to change of channel condition." (*Id.* at 31-33.)

62. The '481 Patent claims at least one technical solution for solving limitations with CAZAC sequences existing in the prior art. "[T]he present invention has been suggested to substantially obviate one or more problems due to limitations and disadvantages of the related art, and an object of the present invention is to provide a method of transmitting and receiving message[s] between a user equipment and a base station by using a long sequence to maximize time/frequency diversity and alleviat[e] performance attenuation due to channel." (*Id.* at 2:37-44.)

63. "Another object of the present invention is to provide a method of transmitting data through a code sequence in a mobile communication system, in which the quantity of data can be increased and the transmitted data becomes robust to noise or channel change." (*Id.* at 2:45-49.)

SAMSUNG

64. Samsung sells phones, smartphones, tablets, and other wireless devices. Products sold by Samsung include, but are not limited to, the devices listed in Appendix A.

65. Samsung sells, manufactures, imports, and uses certain devices that practice the LTE standards established by ETSI and 3GPP. Indeed, Samsung markets to the public that certain devices are compliant with the LTE standard. (*See* Ex. 6, Galaxy S5 User Guide, at 7-8.)

66. Samsung, or its subsidiaries, is a member of ETSI, and was a member during the relevant time period when LG declared the LTE Patent Portfolio to ETSI.

67. The 3GPP Working Group meetings evaluated competing technologies that could best serve the essential functions necessary to standardize wireless communications. Samsung

regularly sent representatives to these 3GPP working group meetings and participated in the development of the LTE standards.

LICENSING EFFORTS

68. On November 4, 2014, Evolved Wireless sent Anthony Kahng, Vice President at Samsung Electronics America, Inc., a letter offering to engage in licensing discussions on FRAND terms for Evolved Wireless's LTE Patent Portfolio. Evolved Wireless further sent Mr. Kahng e-mails on November 4, November 13, and December 1, 2014, to open up licensing discussions.

69. After Samsung did not respond to any communications, Evolved Wireless sent another letter on December 17, 2014, as well as an e-mail on January 6, 2015, seeking to enter licensing negotiations with Samsung. On January 6, 2015, Mr. Kahng responded via e-mail that Samsung was not interested in engaging in any licensing negotiations for the LTE Patent Portfolio.

70. On May 4, 2015, Evolved Wireless sent Mr. Kahng another letter again offering to negotiate a license with Samsung to its LTE Patent Portfolio on FRAND terms. The letter included a detailed list of Evolved Wireless's intellectual property, including identifying the patents in Evolved Wireless's LTE Patent Portfolio.

71. Evolved Wireless has continuously offered Samsung a license to its standard-essential LTE Patent Portfolio on FRAND terms.

72. Samsung has refused to enter any licensing negotiations or discussions with Evolved Wireless for the LTE Patent Portfolio.

COUNT I

INFRINGEMENT OF U.S. PATENT NO. 7,746,916

73. Evolved Wireless restates and realleges each of the allegations set forth above and incorporates them herein.

74. Samsung has infringed, induced infringement, and/or contributed to infringement of the ’916 Patent by making, using, selling, offering for sale, or importing into the United States, or by intending that others make, use, import into, offer for sale, or sell in the United States, products and/or methods covered by one or more claims of the ’916 Patent, including but not limited to cellular telephones, tablet computers, and/or other devices with LTE capabilities and that comply with the LTE standards, including at least TS 36.211, .300, .321, .331, and .423.

75. On information and belief, Samsung has actively induced and is actively inducing third parties, such as Samsung’s customers, to directly infringe the ’916 patent in this District and elsewhere in the United States in violation of 35 U.S.C. § 271(b). On information and belief, Samsung and/or its distributors or representatives have sold or otherwise provided cellular telephones, tablet computers, and/or other devices with LTE capabilities and that comply with the LTE standards to third parties, such as Samsung’s customers. Samsung’s customers, on information and belief, have directly infringed and are directly infringing the ’916 patent. Moreover, Samsung specifically intends for and encourages its customers to use their products in violation of the ’916 patent. For example, by marketing and selling its cellular telephones, tablet computers, and/or other devices with LTE capabilities and that comply with the LTE standards, Samsung has encouraged and is encouraging its customers to use the products to directly infringe the ’916 patent.

76. Further, on information and belief, Samsung has also contributed to and is contributing to direct infringement of the ’916 Patent by third parties, such as Samsung’s customers, in this District and elsewhere in the United States in violation of 35 U.S.C. § 271(c). On information and belief, Samsung and/or its distributors or representatives have sold or otherwise provided cellular telephones, tablet computers, and/or other devices with LTE capabilities and that comply with the LTE standards to third parties, such as Samsung’s customers. Samsung’s customers, on information and belief, have directly infringed and are directly infringing the ’916 patent. Moreover, because the ’916 Patent is essential to the LTE standards, Samsung’s cellular telephones, tablet computers, and/or other devices with LTE capabilities and that comply with the LTE standards are material in practicing the ’916 Patent, are especially made to infringe the ’916 Patent, and have no substantial non-infringing uses.

77. Samsung’s LTE devices that infringe the ’916 Patent include, but are not limited to, at least the devices listed in Appendix A.

78. As of the service of the original Complaint in this lawsuit on July 2, 2015, Samsung has notice of the ’916 Patent and the infringement alleged herein.

79. As of the service of the original Complaint in this lawsuit on July 2, 2015, Samsung has knowingly induced others to directly infringe the ’916 Patent.

80. As of the service of the original Complaint in this lawsuit on July 2, 2015, Samsung has knowingly contributed to the infringement of the ’916 Patent.

81. Samsung does not have a license or permission to use the claimed subject matter in the ’916 Patent.

82. Samsung will continue to infringe the ’916 Patent without a license unless otherwise ordered by this Court. As a result of Samsung’s infringement of the ’916 Patent,

Evolved Wireless has suffered damages and is entitled to monetary relief to compensate for the infringement, but in no event less than a reasonable royalty for the use made of the invention by Samsung, together with interest and costs as fixed by the Court.

COUNT II

INFRINGEMENT OF U.S. PATENT NO. 7,768,965

83. Evolved Wireless restates and realleges each of the allegations set forth above and incorporates them herein.

84. Samsung has infringed, induced infringement, and/or contributed to infringement of the ’965 Patent by making, using, selling, offering for sale, or importing into the United States, or by intending that others make, use, import into, offer for sale, or sell in the United States, products and/or methods covered by one or more claims of the ’965 Patent, including but not limited to cellular telephones, tablet computers, and/or other devices with LTE capabilities and that comply with the LTE standards, including at least TS 36.211, .300, .321, .331, and .423.

85. On information and belief, Samsung has actively induced and is actively inducing third parties, such as Samsung’s customers, to directly infringe the ’965 patent in this District and elsewhere in the United States in violation of 35 U.S.C. § 271(b). On information and belief, Samsung and/or its distributors or representatives have sold or otherwise provided cellular telephones, tablet computers, and/or other devices with LTE capabilities and that comply with the LTE standards to third parties, such as Samsung’s customers. Samsung’s customers, on information and belief, have directly infringed and are directly infringing the ’965 patent. Moreover, Samsung specifically intends for and encourages its customers to use their products in violation of the ’965 patent. For example, by marketing and selling its cellular telephones, tablet

computers, and/or other devices with LTE capabilities and that comply with the LTE standards, Samsung has encouraged and is encouraging its customers to use the products to directly infringe the ’965 patent.

86. Further, on information and belief, Samsung has also contributed to and is contributing to direct infringement of the ’965 Patent by third parties, such as Samsung’s customers, in this District and elsewhere in the United States in violation of 35 U.S.C. § 271(c). On information and belief, Samsung and/or its distributors or representatives have sold or otherwise provided cellular telephones, tablet computers, and/or other devices with LTE capabilities and that comply with the LTE standards to third parties, such as Samsung’s customers. Samsung’s customers, on information and belief, have directly infringed and are directly infringing the ’965 patent. Moreover, because the ’965 Patent is essential to the LTE standards, Samsung’s cellular telephones, tablet computers, and/or other devices with LTE capabilities and that comply with the LTE standards are material in practicing the ’965 Patent, are especially made to infringe the ’965 Patent, and have no substantial non-infringing uses.

87. Samsung’s LTE devices that infringe the ’965 Patent include, but are not limited to, at least the devices listed in Appendix A.

88. As of the service of the original Complaint in this lawsuit on July 2, 2015, Samsung has notice of the ’965 Patent and the infringement alleged herein.

89. As of the service of the original Complaint in this lawsuit on July 2, 2015, Samsung has knowingly induced others to directly infringe the ’965 Patent.

90. As of the service of the original Complaint in this lawsuit on July 2, 2015, Samsung has knowingly contributed to the infringement of the ’965 Patent.

91. Samsung does not have a license or permission to use the claimed subject matter in the ’965 Patent.

92. Samsung will continue to infringe the ’965 Patent without a license unless otherwise ordered by this Court. As a result of Samsung’s infringement of the ’965 Patent, Evolved Wireless has suffered damages and is entitled to monetary relief to compensate for the infringement, but in no event less than a reasonable royalty for the use made of the invention by Samsung, together with interest and costs as fixed by the Court.

COUNT III

INFRINGEMENT OF U.S. PATENT NO. 7,809,373

93. Evolved Wireless restates and realleges each of the allegations set forth above and incorporates them herein.

94. Samsung has infringed, induced infringement, and/or contributed to infringement of the ’373 Patent by making, using, selling, offering for sale, or importing into the United States, or by intending that others make, use, import into, offer for sale, or sell in the United States, products and/or methods covered by one or more claims of the ’373 Patent, including but not limited to cellular telephones, tablet computers, and/or other devices with LTE capabilities and that comply with the LTE standards, including at least TS 36.211, .300, .321, .331, and .423.

95. On information and belief, Samsung has actively induced and is actively inducing third parties, such as Samsung’s customers, to directly infringe the ’373 patent in this District and elsewhere in the United States in violation of 35 U.S.C. § 271(b). On information and belief, Samsung and/or its distributors or representatives have sold or otherwise provided cellular telephones, tablet computers, and/or other devices with LTE capabilities and that comply

with the LTE standards to third parties, such as Samsung's customers. Samsung's customers, on information and belief, have directly infringed and are directly infringing the '373 patent. Moreover, Samsung specifically intends for and encourages its customers to use their products in violation of the '373 patent. For example, by marketing and selling its cellular telephones, tablet computers, and/or other devices with LTE capabilities and that comply with the LTE standards, Samsung has encouraged and is encouraging its customers to use the products to directly infringe the '373 patent.

96. Further, on information and belief, Samsung has also contributed to and is contributing to direct infringement of the '373 Patent by third parties, such as Samsung's customers, in this District and elsewhere in the United States in violation of 35 U.S.C. § 271(c). On information and belief, Samsung and/or its distributors or representatives have sold or otherwise provided cellular telephones, tablet computers, and/or other devices with LTE capabilities and that comply with the LTE standards to third parties, such as Samsung's customers. Samsung's customers, on information and belief, have directly infringed and are directly infringing the '373 patent. Moreover, because the '373 Patent is essential to the LTE standards, Samsung's cellular telephones, tablet computers, and/or other devices with LTE capabilities and that comply with the LTE standards are material in practicing the '373 Patent, are especially made to infringe the '373 Patent, and have no substantial non-infringing uses.

97. Samsung's LTE devices that infringe the '373 Patent include, but are not limited to, at least the devices listed in Appendix A.

98. As of the service of the original Complaint in this lawsuit on July 2, 2015, Samsung has notice of the '373 Patent and the infringement alleged herein.

99. As of the service of the original Complaint in this lawsuit on July 2, 2015, Samsung has knowingly induced others to directly infringe the ’373 Patent.

100. As of the service of the original Complaint in this lawsuit on July 2, 2015, Samsung has knowingly contributed to the infringement of the ’373 Patent.

101. Samsung does not have a license or permission to use the claimed subject matter in the ’373 Patent.

102. Samsung will continue to infringe the ’373 Patent without a license unless otherwise ordered by this Court. As a result of Samsung’s infringement of the ’373 Patent, Evolved Wireless has suffered damages and is entitled to monetary relief to compensate for the infringement, but in no event less than a reasonable royalty for the use made of the invention by Samsung, together with interest and costs as fixed by the Court.

COUNT IV

INFRINGEMENT OF U.S. PATENT NO. 7,881,236

103. Evolved Wireless restates and realleges each of the allegations set forth above and incorporates them herein.

104. Samsung has infringed, induced infringement, and/or contributed to infringement of the ’236 Patent by making, using, selling, offering for sale, or importing into the United States, or by intending that others make, use, import into, offer for sale, or sell in the United States, products and/or methods covered by one or more claims of the ’236 Patent, including but not limited to cellular telephones, tablet computers, and/or other devices with LTE capabilities and that comply with the LTE standards, including at least TS 36.211, .300, .321, .331, and .423.

105. On information and belief, Samsung has actively induced and is actively inducing third parties, such as Samsung's customers, to directly infringe the '236 patent in this District and elsewhere in the United States in violation of 35 U.S.C. § 271(b). On information and belief, Samsung and/or its distributors or representatives have sold or otherwise provided cellular telephones, tablet computers, and/or other devices with LTE capabilities and that comply with the LTE standards to third parties, such as Samsung's customers. Samsung's customers, on information and belief, have directly infringed and are directly infringing the '236 patent. Moreover, Samsung specifically intends for and encourages its customers to use their products in violation of the '236 patent. For example, by marketing and selling its cellular telephones, tablet computers, and/or other devices with LTE capabilities and that comply with the LTE standards, Samsung has encouraged and is encouraging its customers to use the products to directly infringe the '236 patent.

106. Further, on information and belief, Samsung has also contributed to and is contributing to direct infringement of the '236 Patent by third parties, such as Samsung's customers, in this District and elsewhere in the United States in violation of 35 U.S.C. § 271(c). On information and belief, Samsung and/or its distributors or representatives have sold or otherwise provided cellular telephones, tablet computers, and/or other devices with LTE capabilities and that comply with the LTE standards to third parties, such as Samsung's customers. Samsung's customers, on information and belief, have directly infringed and are directly infringing the '236 patent. Moreover, because the '236 Patent is essential to the LTE standards, Samsung's cellular telephones, tablet computers, and/or other devices with LTE capabilities and that comply with the LTE standards are material in practicing the '236 Patent, are especially made to infringe the '236 Patent, and have no substantial non-infringing uses.

107. Samsung's LTE devices that infringe the '236 Patent include, but are not limited to, at least the devices listed in Appendix A.

108. As of the service of the original Complaint in this lawsuit on July 2, 2015, Samsung has notice of the '236 Patent and the infringement alleged herein.

109. As of the service of the original Complaint in this lawsuit on July 2, 2015, Samsung has knowingly induced others to directly infringe the '236 Patent.

110. As of the service of the original Complaint in this lawsuit on July 2, 2015, Samsung has knowingly contributed to the infringement of the '236 Patent.

111. Samsung does not have a license or permission to use the claimed subject matter in the '236 Patent.

112. Samsung will continue to infringe the '236 Patent without a license unless otherwise ordered by this Court. As a result of Samsung's infringement of the '236 Patent, Evolved Wireless has suffered damages and is entitled to monetary relief to compensate for the infringement, but in no event less than a reasonable royalty for the use made of the invention by Samsung, together with interest and costs as fixed by the Court.

COUNT V

INFRINGEMENT OF U.S. PATENT NO. 8,218,481

113. Evolved Wireless restates and realleges each of the allegations set forth above and incorporates them herein.

114. Samsung has infringed, induced infringement, and/or contributed to infringement of the '481 Patent by making, using, selling, offering for sale, or importing into the United States, or by intending that others make, use, import into, offer for sale, or sell in the United States, products and/or methods covered by one or more claims of the '481 Patent,

including but not limited to cellular telephones, tablet computers, and/or other devices with LTE capabilities and that comply with the LTE standards, including at least TS 36.211, .300, .321, .331, and .423.

115. On information and belief, Samsung has actively induced and is actively inducing third parties, such as Samsung's customers, to directly infringe the '481 patent in this District and elsewhere in the United States in violation of 35 U.S.C. § 271(b). On information and belief, Samsung and/or its distributors or representatives have sold or otherwise provided cellular telephones, tablet computers, and/or other devices with LTE capabilities and that comply with the LTE standards to third parties, such as Samsung's customers. Samsung's customers, on information and belief, have directly infringed and are directly infringing the '481 patent. Moreover, Samsung specifically intends for and encourages its customers to use their products in violation of the '481 patent. For example, by marketing and selling its cellular telephones, tablet computers, and/or other devices with LTE capabilities and that comply with the LTE standards, Samsung has encouraged and is encouraging its customers to use the products to directly infringe the '481 patent.

116. Further, on information and belief, Samsung has also contributed to and is contributing to direct infringement of the '481 Patent by third parties, such as Samsung's customers, in this District and elsewhere in the United States in violation of 35 U.S.C. § 271(c). On information and belief, Samsung and/or its distributors or representatives have sold or otherwise provided cellular telephones, tablet computers, and/or other devices with LTE capabilities and that comply with the LTE standards to third parties, such as Samsung's customers. Samsung's customers, on information and belief, have directly infringed and are directly infringing the '481 patent. Moreover, because the '481 Patent is essential to the LTE

standards, Samsung's cellular telephones, tablet computers, and/or other devices with LTE capabilities and that comply with the LTE standards are material in practicing the '481 Patent, are especially made to infringe the '481 Patent, and have no substantial non-infringing uses.

117. Samsung's LTE devices that infringe the '481 Patent include, but are not limited to, at least the devices listed in Appendix A.

118. As of the service of the original Complaint in this lawsuit on July 2, 2015, Samsung has notice of the '481 Patent and the infringement alleged herein.

119. As of the service of the original Complaint in this lawsuit on July 2, 2015, Samsung has knowingly induced others to directly infringe the '481 Patent.

120. As of the service of the original Complaint in this lawsuit on July 2, 2015, Samsung has knowingly contributed to the infringement of the '481 Patent.

121. Samsung does not have a license or permission to use the claimed subject matter in the '481 Patent.

122. Samsung will continue to infringe the '481 Patent without a license unless otherwise ordered by this Court. As a result of Samsung's infringement of the '481 Patent, Evolved Wireless has suffered damages and is entitled to monetary relief to compensate for the infringement, but in no event less than a reasonable royalty for the use made of the invention by Samsung, together with interest and costs as fixed by the Court.

DEMAND FOR TRIAL BY JURY

Evolved Wireless demands a jury trial on all issues so triable, pursuant to Rule 38 of the Federal Rules of Civil Procedure.

PRAYER FOR RELIEF

WHEREFORE, Plaintiff Evolved Wireless prays for the following relief:

1. A declaration that Samsung has infringed and is infringing at least one claim in Evolved Wireless's LTE Patent Portfolio;

2. An order further entering a permanent injunction under 35 U.S.C. § 283 enjoining Samsung and their officers, directors, agents, servants, affiliates, employees, divisions, branches, subsidiaries, parents, and all others acting in active concert or participation with it, from infringement of all claims in Evolved Wireless's LTE Patent Portfolio for which it is determined that Samsung has and/or does infringe;

3. If a permanent injunction is not granted, a judicial determination of the conditions for future infringement such as an ongoing royalty;

4. An award of damages, including costs, expenses, pre-judgment and post-judgment interest, in an amount adequate to compensate Evolved Wireless for Samsung's infringement of all claims in Evolved Wireless's LTE Patent Portfolio for which it is determined that Samsung has and/or does infringe;

5. An equitable accounting of damages owed by Samsung for the period of infringement of Evolved Wireless's LTE Patent Portfolio, following the period of damages established by Evolved Wireless at trial;

6. A finding that this case is exceptional and an award of attorneys' fees pursuant to 35 U.S.C. § 285;

7. An award of costs, expenses, and disbursements; and

8. Such other and further relief that Evolved Wireless may be entitled to in law and equity.

Dated: May 26, 2016

Respectfully submitted,

FARNAN LLP

/s/ Michael J. Farnan

Brian E. Farnan (Bar No. 4089)
Michael J. Farnan (Bar No. 5165)
919 N. Market Street, 12th Floor
Wilmington, Delaware 19801
(302) 777-0300
(302) 777-0301
bfarnan@farnanlaw.com

Christopher K. Larus (admitted *pro hac vice*)
Ryan M. Schultz (admitted *pro hac vice*)
Andrew D. Hedden (admitted *pro hac vice*)
Benjamen C. Linden (admitted *pro hac vice*)
Ryan E. Dornberger (admitted *pro hac vice*)
Anthony F. Schlehuber (admitted *pro hac vice*)
ROBINS KAPLAN LLP
800 LaSalle Avenue, Suite 2800
Minneapolis, Minnesota 55402
Telephone: (612) 349-8500
Facsimile: (612) 339-4181
clarus@robinskaplan.com
rschultz@robinskaplan.com
ahedden@robinskaplan.com
blinden@robinskaplan.com
rdornberger@robinskaplan.com
aschlehuber@robinskaplan.com

Andrea L. Gothing (admitted *pro hac vice*)
ROBINS KAPLAN LLP
2440 W. El Camino Real, Suite 100
Mountain View, CA 94040
Telephone: (650) 784-4040
Facsimile: (650) 784-4041
agothing@robinskaplan.com

Counsel For Plaintiff Evolved Wireless, LLC

Appendix A

LTE Devices

1. Alpha Galaxy
2. Ativ Odyssey
3. Ativ S
4. Ativ S Neo
5. Ativ SE
6. Craft
7. Droid Charge
8. Focus 2 Windows Phone
9. Galaxy A3
10. Galaxy A5
11. Galaxy A7
12. Galaxy Ace 3
13. Galaxy Ace Style
14. Galaxy Admire 2
15. Galaxy Admire 4G
16. Galaxy Alpha
17. Galaxy Attain 4G
18. Galaxy Avant
19. Galaxy Axiom
20. Galaxy Camera (Verizon 4G LTE Connected)
21. Galaxy Core
22. Galaxy Core Lite 4G
23. Galaxy Core Max
24. Galaxy Core Prime
25. Galaxy E5
26. Galaxy E7
27. Galaxy Express
28. Galaxy Grand 2
29. Galaxy Grand Max
30. Galaxy Grand Prime
31. Galaxy Indulge
32. Galaxy J1
33. Galaxy K Zoom
34. Galaxy Light
35. Galaxy Mega
36. Galaxy Mega 2
37. Galaxy Metrix 4G
38. Galaxy Nexus
39. Galaxy Note
40. Galaxy Note 2
41. Galaxy Note 3
42. Galaxy Note 3 Neo
43. Galaxy Note 3 TD-LTE
44. Galaxy Note 4
45. Galaxy Note 4 S-LTE
46. Galaxy Note Edge
47. Galaxy Note Pro
48. Galaxy Rugby Pro
49. Galaxy S Aviator
50. Galaxy S Broadband LTE-A
51. Galaxy S2
52. Galaxy S2 Skyrocket
53. Galaxy S3
54. Galaxy S3 Mini
55. Galaxy S4
56. Galaxy S4 Active
57. Galaxy S4 LTE-A
58. Galaxy S4 Mini
59. Galaxy S4 TD-LTE
60. Galaxy S4 Zoom
61. Galaxy S5
62. Galaxy S5 Active
63. Galaxy S5 Broadband LTE-A
64. Galaxy S5 Mini
65. Galaxy S5 Sport
66. Galaxy S5+
67. Galaxy S6
68. Galaxy S6 4G+
69. Galaxy S6 Active
70. Galaxy S6 Edge
71. Galaxy Stellar
72. Galaxy Stratosphere
73. Galaxy Stratosphere 2
74. Galaxy Tab
75. Galaxy Tab 2
76. Galaxy Tab 3
77. Galaxy Tab 4
78. Galaxy Tab A
79. Galaxy Tab A 4G
80. Galaxy Tab A with S Pen
81. Galaxy Tab Active
82. Galaxy Tab Pro
83. Galaxy Tab Q
84. Galaxy Tab S
85. Galaxy Victory 4G LTE
86. Galaxy W
87. Galaxy Zoom Camera
88. Jetpack 4G LTE Mobile hotspot
89. Lightray 4G
90. LTE Mobile HotSpot PRO
91. Portable Mobile Hotspot

LTE Device Model Numbers

1. 404SC
2. EK-GN120
3. EK-GN120A
4. EM-7700-J
5. EM-7700-W
6. GT-I9195
7. GT-I9195I
8. GT-I9195L
9. GT-I9195T
10. GT-I9197
11. GT-I9205
12. GT-I9210

13. GT-I9295
14. GT-I9505
15. GT-I9506
16. GT-I9507
17. GT-I9507V
18. GT-I9515
19. GT-I9515L
20. GT-P5220
21. GT-S7275B
22. SC-04G
23. SC-05G
24. SCH-I200
25. SCH-I405
26. SCH-I405U
27. SCH-I415
28. SCH-I425
29. SCH-I435
30. SCH-I510
31. SCH-I515
32. SCH-I535
33. SCH-I545
34. SCH-I605
35. SCH-I705
36. SCH-I815
37. SCH-I905
38. SCH-I905U
39. SCH-I915
40. SCH-I925
41. SCH-I925U
42. SCH-I930
43. SCH-LC11
44. SCH-LC11R
45. SCH-R530
46. SCH-R530M
47. SCH-R820
48. SCH-R830
49. SCH-R830C
50. SCH-R860U
51. SCH-R890
52. SCH-R900
53. SCH-R910
54. SCH-R920
55. SCH-R930
56. SCH-R940
57. SCH-R950
58. SCH-R960
59. SCH-R970
60. SCH-R970C
61. SC-L23
62. SC-L24
63. SC-T21
64. SC-V31
65. SGH-I187
66. SGH-I257
67. SGH-I307
68. SGH-I317
69. SGH-I337
70. SGH-I437
71. SGH-I467
72. SGH-I497
73. SGH-I527
74. SGH-I537
75. SGH-I547
76. SGH-I577
77. SGH-I667
78. SGH-I717
79. SGH-I727
80. SGH-I747
81. SGH-I757
82. SGH-I957
83. SGH-M819N
84. SGH-M919
85. SGH-T399
86. SGH-T779
87. SGH-T889
88. SGH-T899M
89. SGH-T999L
90. SHV-E275S
91. SHV-E300LA
92. SHV-E300SA
93. SHV-E310
94. SHV-E330S
95. SHV-E400S
96. SHV-E500S
97. SMA-3000
98. SMA-300F
99. SMA-300FU
100. SMA-300G
101. SMA-300M
102. SMA-300Y
103. SMA-5000
104. SMA-500F
105. SMA-500G
106. SMA-500KOR
107. SMA-500M
108. SMA-500Y
109. SMA-7000
110. SMA-700FD
111. SM-C105
112. SM-C105A
113. SM-C105S
114. SM-C115
115. SM-C115L
116. SM-C115M
117. SM-E500M
118. SM-E7009
119. SM-G313MU
120. SM-G357M
121. SM-G3586V
122. SM-G360AZ
123. SM-G360FY
124. SM-G360G
125. SM-G360GY
126. SM-G360M
127. SM-G360P
128. SM-G360T
129. SM-G360V
130. SM-G386T
131. SM-G386W
132. SM-G388F
133. SM-G5108Q
134. SM-G510F
135. SM-G5308W
136. SM-G530AZ
137. SM-G530F
138. SM-G530FZ
139. SM-G530M
140. SM-G530R4
141. SM-G530T
142. SM-G7105
143. SM-G7105L
144. SM-G710S
145. SM-G7200
146. SM-G720AX
147. SM-G730A
148. SM-G730V
149. SM-G7508Q
150. SM-G7508W

151. SM-G750A
152. SM-G750F
153. SM-G800A
154. SM-G800F
155. SM-G800M
156. SM-G800R4
157. SM-G800Y
158. SM-G8508S
159. SM-G850A
160. SM-G850F
161. SM-G850KOR
162. SM-G850M
163. SM-G850Y
164. SM-G860P
165. SM-G870A
166. SM-G870F
167. SM-G890A
168. SM-G900A
169. SM-G900F
170. SM-G900FG
171. SM-G900I
172. SM-G900M
173. SM-G900P
174. SM-G900R4
175. SM-G900R7
176. SM-G900S
177. SM-G900T
178. SM-G900V
179. SM-G901F
180. SM-G906S
181. SM-G910S
182. SM-G9200
183. SM-G920A
184. SM-G920F
185. SM-G920I
186. SM-G920KOR
187. SM-G920P
188. SM-G920R4
189. SM-G920R7
190. SM-G920T
191. SM-G920V
192. SM-G920W8
193. SM-G9250
194. SM-G925A
195. SM-G925F
196. SM-G925I
197. SM-G925KOR
198. SM-G925P
199. SM-G925R4
200. SM-G925R7
201. SM-G925T
202. SM-G925V
203. SM-G925W8
204. SM-J100M
205. SM-J100VPP
206. SM-N7505
207. SM-N7505L
208. SM-N750KOR
209. SM-N9005
210. SM-N9007
211. SM-N900A
212. SM-N900KOR
213. SM-N900P
214. SM-N900R4
215. SM-N900T
216. SM-N900V
217. SM-N900W8
218. SM-N9100
219. SM-N9108V
220. SM-N910A
221. SM-N910C
222. SM-N910F
223. SM-N910G
224. SM-N910KOR
225. SM-N910P
226. SM-N910R4
227. SM-N910T
228. SM-N910U
229. SM-N910V
230. SM-N9150
231. SM-N915A
232. SM-N915F
233. SM-N915G
234. SM-N915KOR
235. SM-N915P
236. SM-N915R4
237. SM-N915T
238. SM-N915V
239. SM-N915W8
240. SM-N916KOR
241. SM-P355
242. SM-P355M
243. SM-P555
244. SM-P555M
245. SM-P605
246. SM-P605KOR
247. SM-P605M
248. SM-P605V
249. SM-P607T
250. SM-P905
251. SM-P905A
252. SM-P905M
253. SM-P905V
254. SM-P907A
255. SM-S920L
256. SM-S978L
257. SM-T217A
258. SM-T217S
259. SM-T217T
260. SM-T235
261. SM-T237P
262. SM-T239
263. SM-T239M
264. SM-T2556
265. SM-T255S
266. SM-T315
267. SM-T315T
268. SM-T325
269. SM-T335
270. SM-T337A
271. SM-T337T
272. SM-T337V
273. SM-T355
274. SM-T365
275. SM-T365M
276. SM-T525
277. SM-T535
278. SM-T537A
279. SM-T537R4
280. SM-T537V
281. SM-T555
282. SM-T705
283. SM-T705M
284. SM-T705Y
285. SM-T707A
286. SM-T707V
287. SM-T805
288. SM-T805KOR

289. SM-T805M
290. SM-T805Y
291. SM-T807A
292. SM-T807P
293. SM-T807R4
294. SM-T807T
295. SM-T807V
296. SM-T905
297. SM-V100T
298. SM-V101M
299. SM-W750V
300. SM-Z910F
301. SPH-I800
302. SPH-L300
303. SPH-L500
304. SPH-L520
305. SPH-L600
306. SPH-L700
307. SPH-L710
308. SPH-L710T
309. SPH-L720
310. SPH-L720T
311. SPH-L900
312. SPH-P500
313. SPH-P600
314. SWD-SC01G

EXHIBIT 1

US007746916B2

(12) **United States Patent**
Han et al.

(10) **Patent No.: US 7,746,916 B2**
(45) **Date of Patent: Jun. 29, 2010**

(54) **METHOD AND APPARATUS FOR GENERATING AND TRANSMITTING CODE SEQUENCE IN A WIRELESS COMMUNICATION SYSTEM**

(75) Inventors: **Seung Hee Han**, Seoul (KR); **Min Seok Noh**, Seoul (KR); **Yeon Hyeon Kwon**, Suwon-si (KR); **Hyun Hwa Park**, Anyang-si (KR); **Hyun Woo Lee**, Anyang-si (KR); **Dong Cheol Kim**, Uiwang-si (KR)

(73) Assignee: **LG Electronics Inc.**, Seoul (KR)

(*) Notice: Subject to any disclaimer, the term of this patent is extended or adjusted under 35 U.S.C. 154(b) by 580 days.

(21) Appl. No.: **11/563,909**

(22) Filed: **Nov. 28, 2006**

(65) **Prior Publication Data**

US 2007/0177682 A1 Aug. 2, 2007

(30) **Foreign Application Priority Data**

Nov. 28, 2005 (KR) 10-2005-0114306
Jul. 4, 2006 (KR) 10-2006-0062467
Jul. 7, 2006 (KR) 10-2006-0064091

(51) **Int. Cl.**
H04B 1/00 (2006.01)

(52) **U.S. Cl.** **375/142**; 370/203; 370/208; 375/131; 375/140; 375/146; 375/148

(58) **Field of Classification Search** 370/203; 375/131, 142
See application file for complete search history.

(56) **References Cited**

U.S. PATENT DOCUMENTS

7,426,175	B2 *	9/2008	Zhuang et al.	370/203
2003/0156624	A1 *	8/2003	Koslar	375/131
2005/0036481	A1	2/2005	Chayat et al.	
2006/0050799	A1	3/2006	Hou et al.	

FOREIGN PATENT DOCUMENTS

EP	1065855	1/2001
KR	10-2007-0103917	10/2007
WO	9605668	2/1996
WO	2003049295	6/2003
WO	WO 03/075500	9/2003
WO	WO 2005/104412	11/2005

OTHER PUBLICATIONS

Texas Instruments "On allocation of Uplink Pilot Sub-Channels in Eutra SC-FDMA", 3GPP TSG-RAN WG1, E1-050922, Aug. 29, 2005.

* cited by examiner

Primary Examiner—David C Payne
Assistant Examiner—Adolf Dsouza
(74) *Attorney, Agent, or Firm*—Lee, Hong, Degerman, Kang & Waimey

(57) **ABSTRACT**

A method of generating a code sequence in a wireless communication system is disclosed. More specifically, the method includes recognizing a desired length of the code sequence, generating a code sequence having a length different from the desired length, and modifying the length of the generated code sequence to equal the desired length. Here, the step of modifying includes discarding at least one element of the generated code sequence or inserting at least one null element to the generated code sequence.

11 Claims, 18 Drawing Sheets

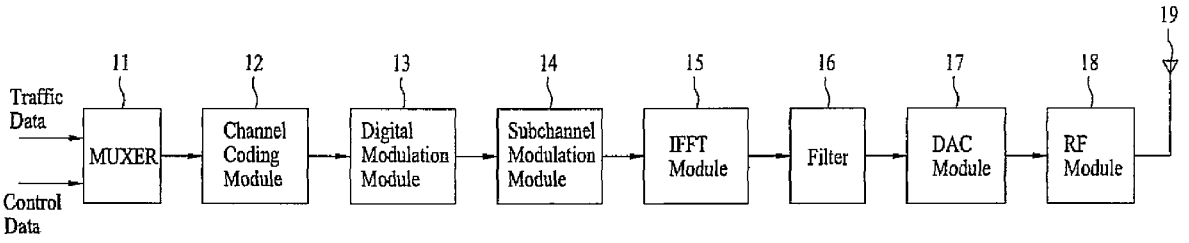

FIG. 1

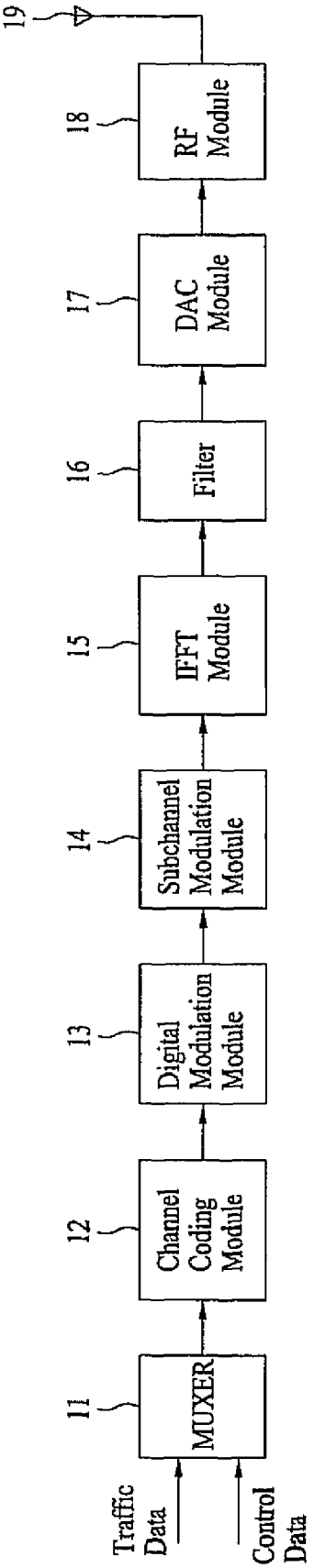
Traffic Data
Control Data
11
MUXER
12
Channel Coding Module
13
Digital Modulation Module
14
Subchannel Modulation Module
15
IFFT Module
16
Filter
17
DAC Module
18
RF Module
19

FIG. 2

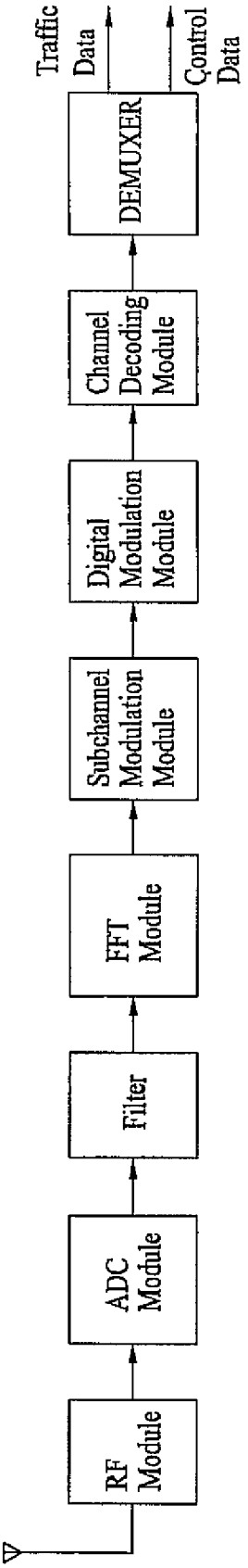
RF Module
ADC Module
Filter
FFT Module
Subchannel Modulation Module
Digital Modulation Module
Channel Decoding Module
DEMUXER
Traffic Data
Control Data

FIG. 3

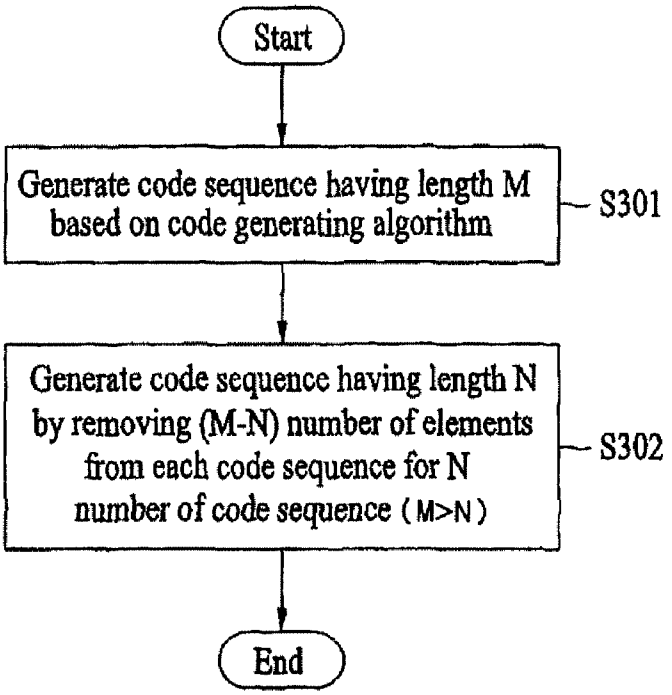
Start
Generate code sequence having length M based on code generating algorithm
S301
Generate code sequence having length N by removing (M-N) number of elements from each code sequence for N number of code sequence (M>N)
S302
End

FIG. 4

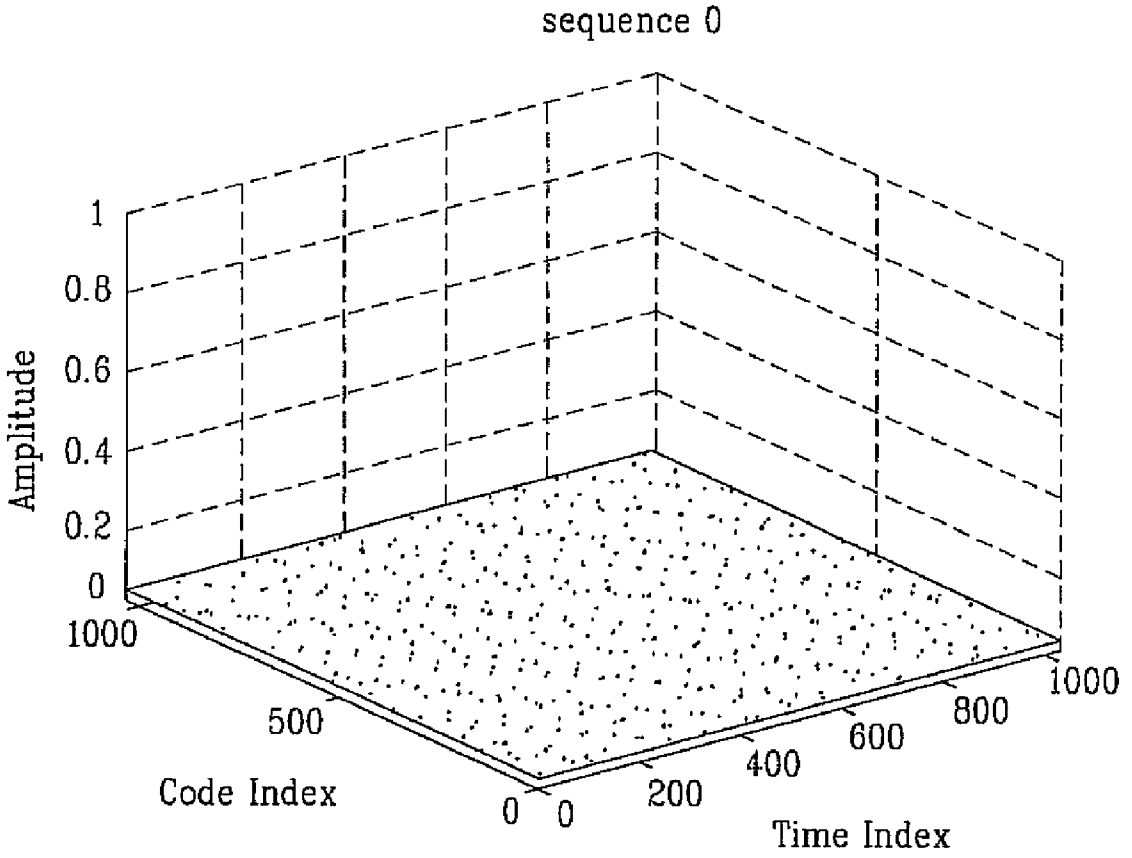
sequence 0
Amplitude
1
0.8
0.6
0.4
0.2
0
1000
500
0
Code Index
0
200
400
600
800
1000
Time Index

FIG. 5

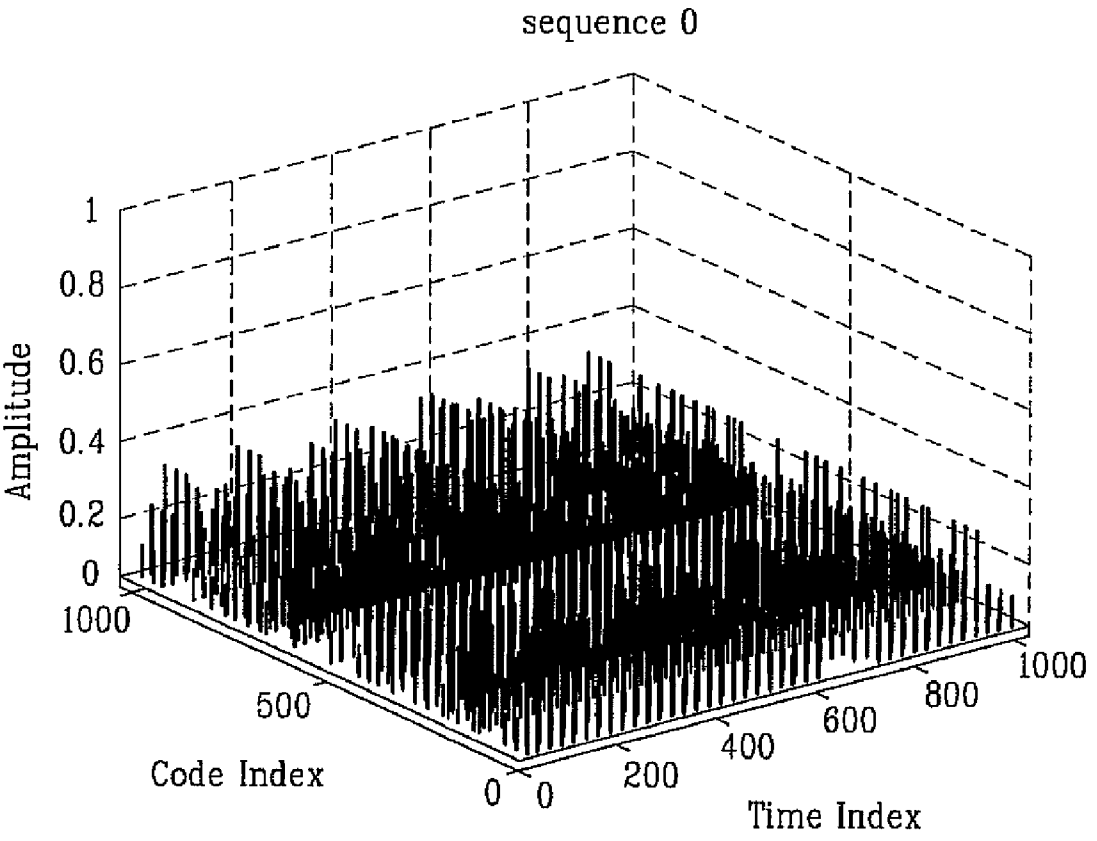
sequence 0
Amplitude
1
0.8
0.6
0.4
0.2
0
1000
500
0
Code Index
0
200
400
600
800
1000
Time Index

FIG. 6

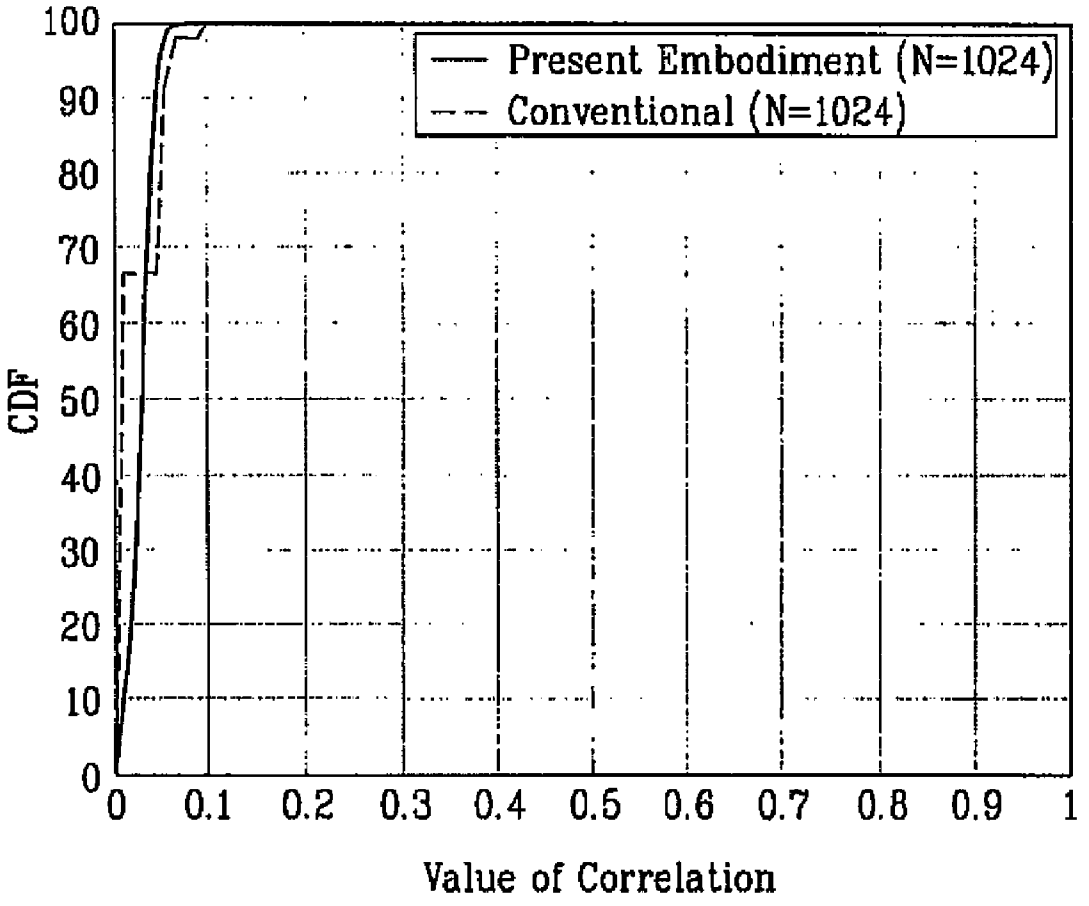
Present Embodiment (N=1024)
Conventional (N=1024)
CDF
100
90
80
70
60
50
40
30
20
10
0
0
0.1
0.2
0.3
0.4
0.5
0.6
0.7
0.8
0.9
1
Value of Correlation

FIG. 7

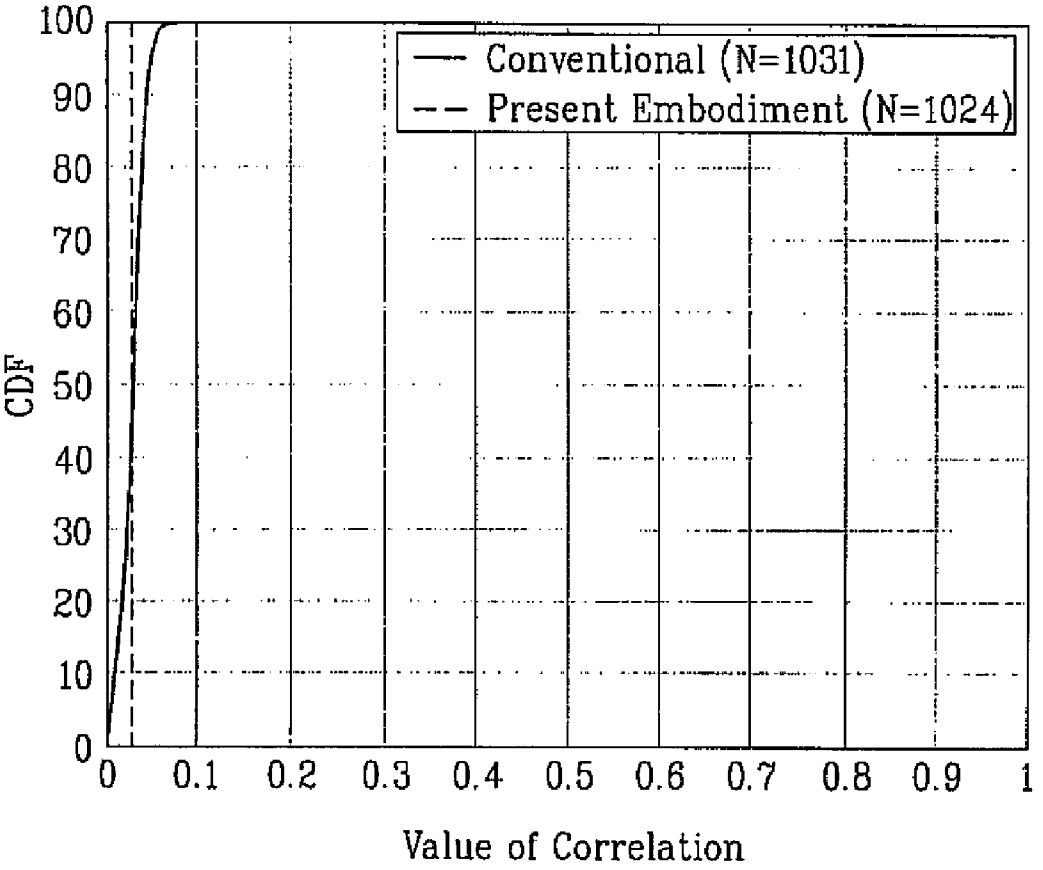
Conventional (N=1031)
Present Embodiment (N=1024)
CDF
100
90
80
70
60
50
40
30
20
10
0
0
0.1
0.2
0.3
0.4
0.5
0.6
0.7
0.8
0.9
1
Value of Correlation

FIG. 8

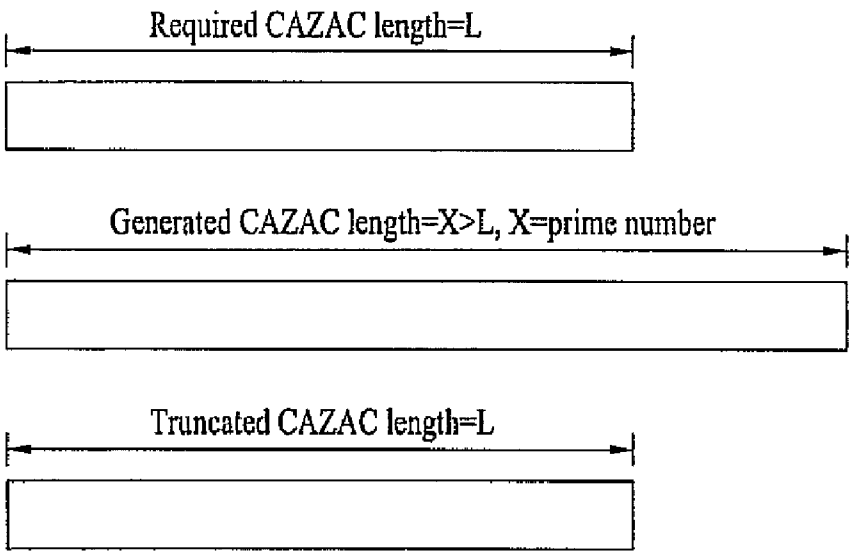
Required CAZAC length=L
Generated CAZAC length=X>L, X=prime number
Truncated CAZAC length=L

FIG. 9

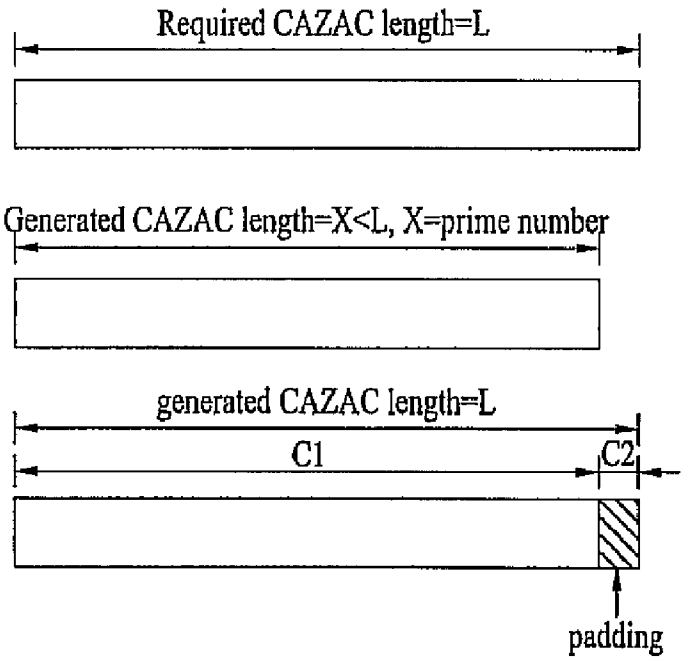
Required CAZAC length=L
Generated CAZAC length=X<L, X=prime number
generated CAZAC length=L
C1
C2
padding

FIG. 10

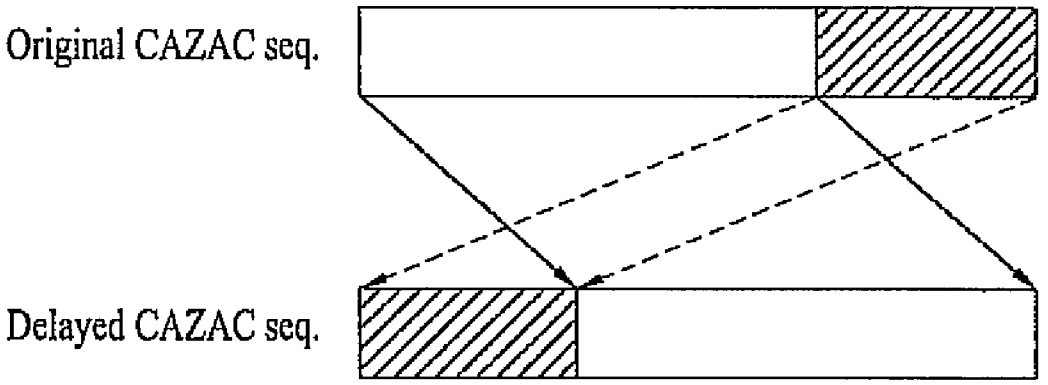

FIG. 11

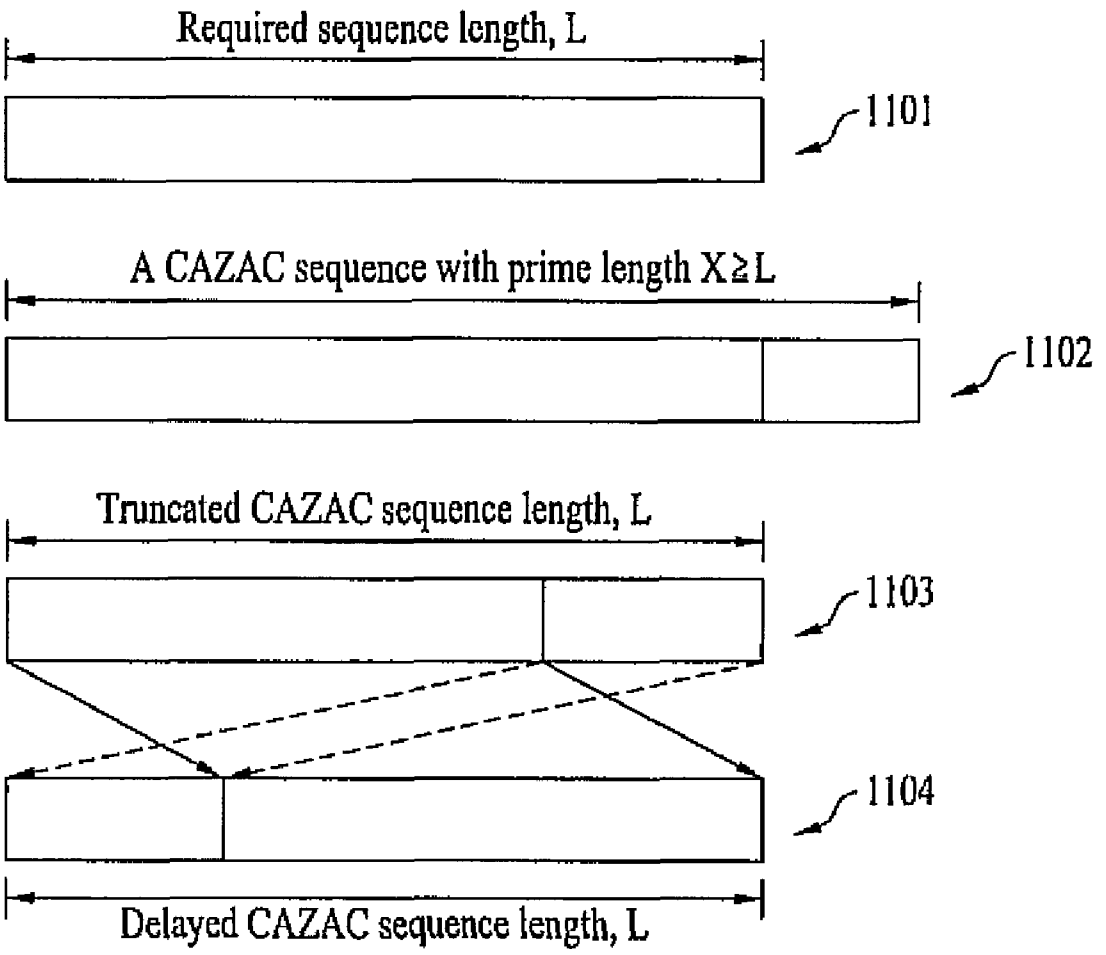
Required sequence length, L
1101
A CAZAC sequence with prime length X≥L
1102
Truncated CAZAC sequence length, L
1103
1104
Delayed CAZAC sequence length, L

FIG. 12

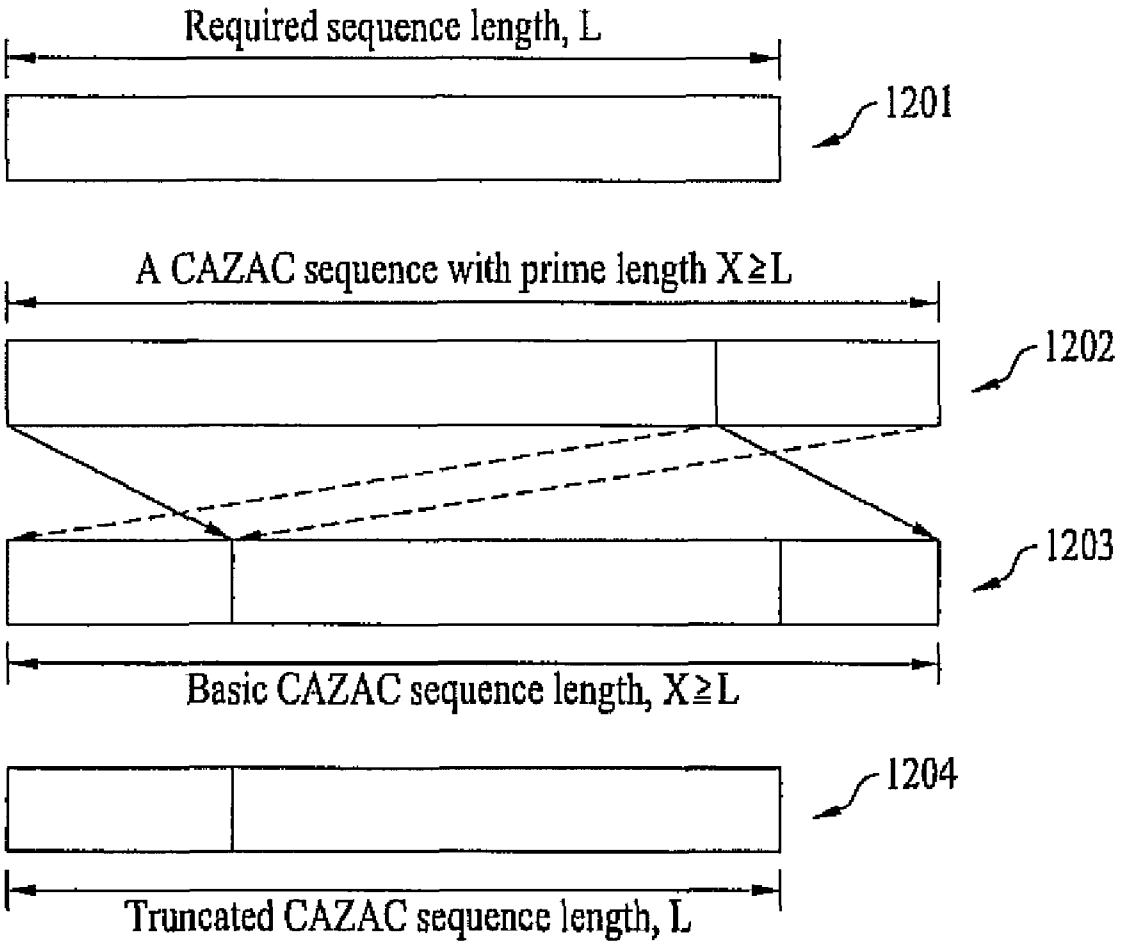
Required sequence length, L
1201
A CAZAC sequence with prime length X≧L
1202
1203
Basic CAZAC sequence length, X≧L
1204
Truncated CAZAC sequence length, L

FIG. 13

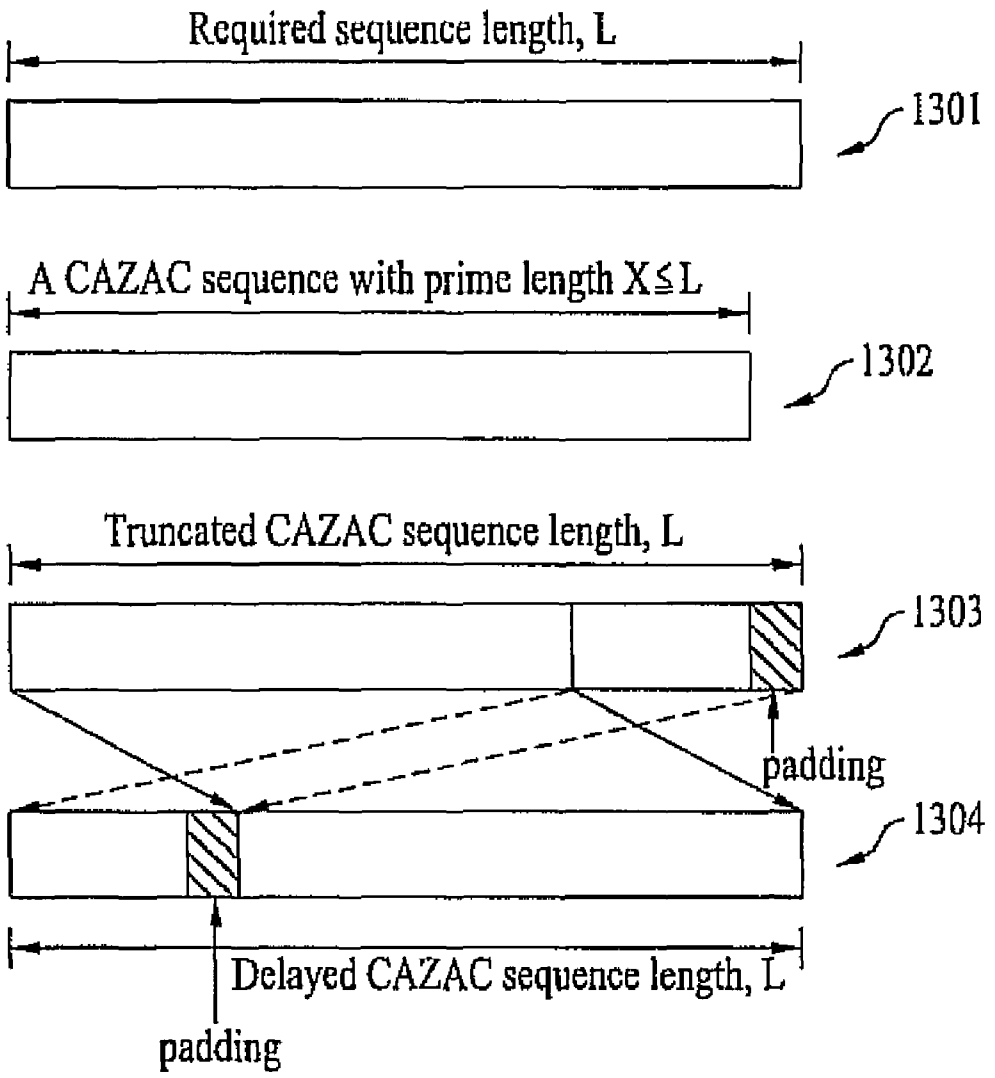
Required sequence length, L
1301
A CAZAC sequence with prime length X≤L
1302
Truncated CAZAC sequence length, L
1303
padding
1304
Delayed CAZAC sequence length, L
padding

FIG. 14

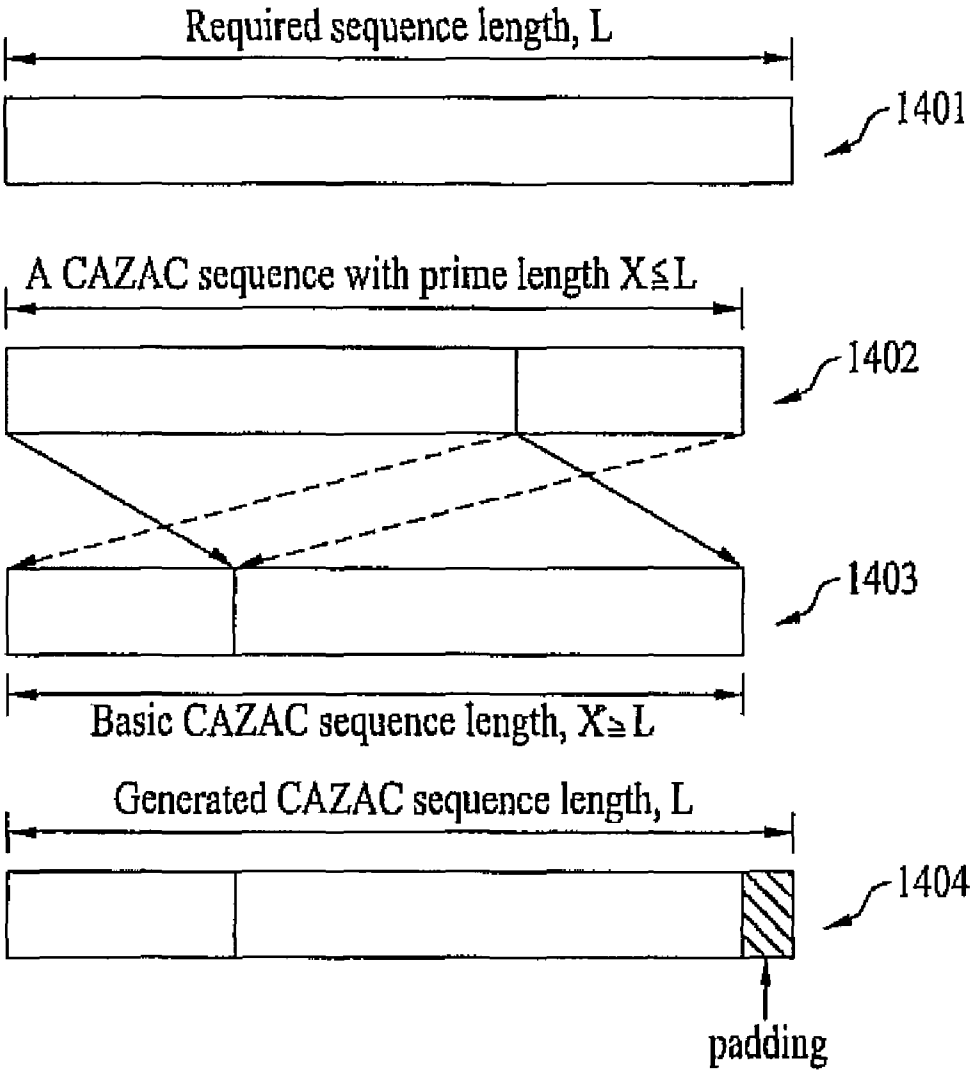
Required sequence length, L
1401
A CAZAC sequence with prime length X≦L
1402
1403
Basic CAZAC sequence length, X≧L
Generated CAZAC sequence length, L
1404
padding

FIG. 15

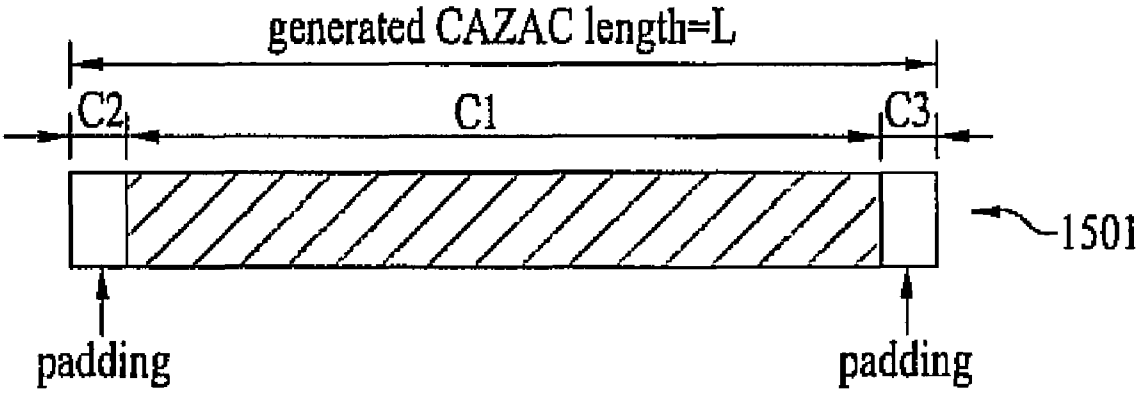

FIG. 16

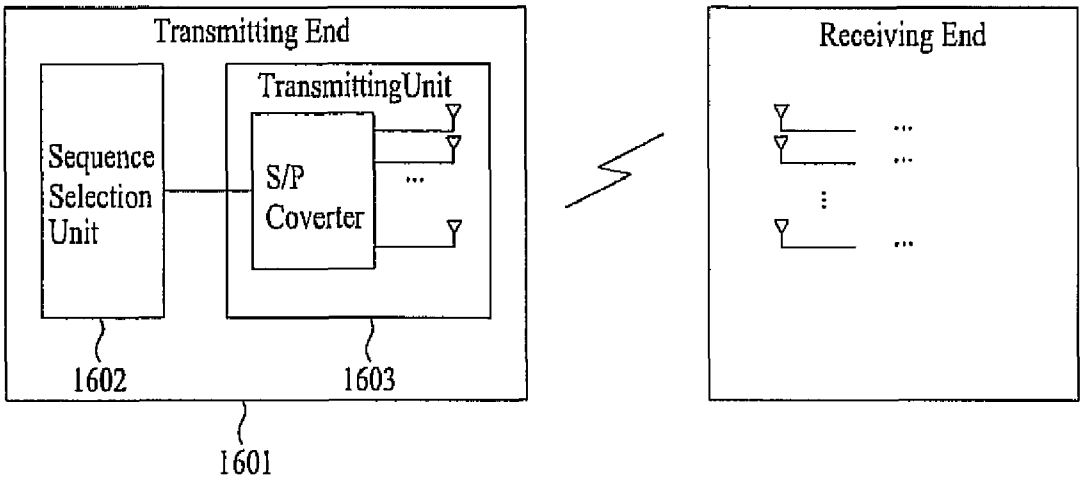
Transmitting End
TransmittingUnit
Sequence Selection Unit
S/P Coverter
1602
1603
1601
Receiving End

FIG. 17

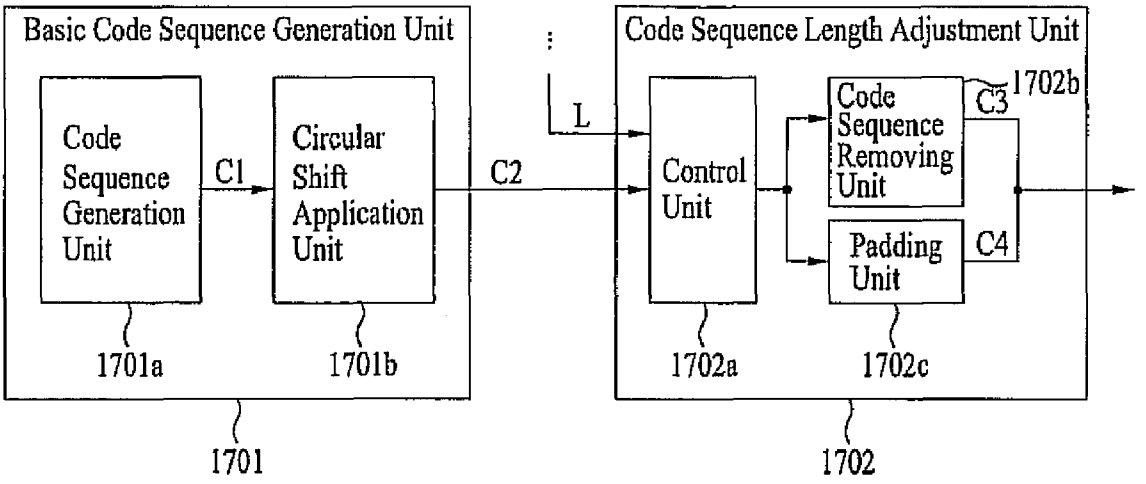
Basic Code Sequence Generation Unit
Code Sequence Generation Unit
C1
Circular Shift Application Unit
C2
L
Code Sequence Length Adjustment Unit
Control Unit
Code Sequence Removing Unit
C3
1702b
Padding Unit
C4
1701a
1701b
1702a
1702c
1701
1702

FIG. 18

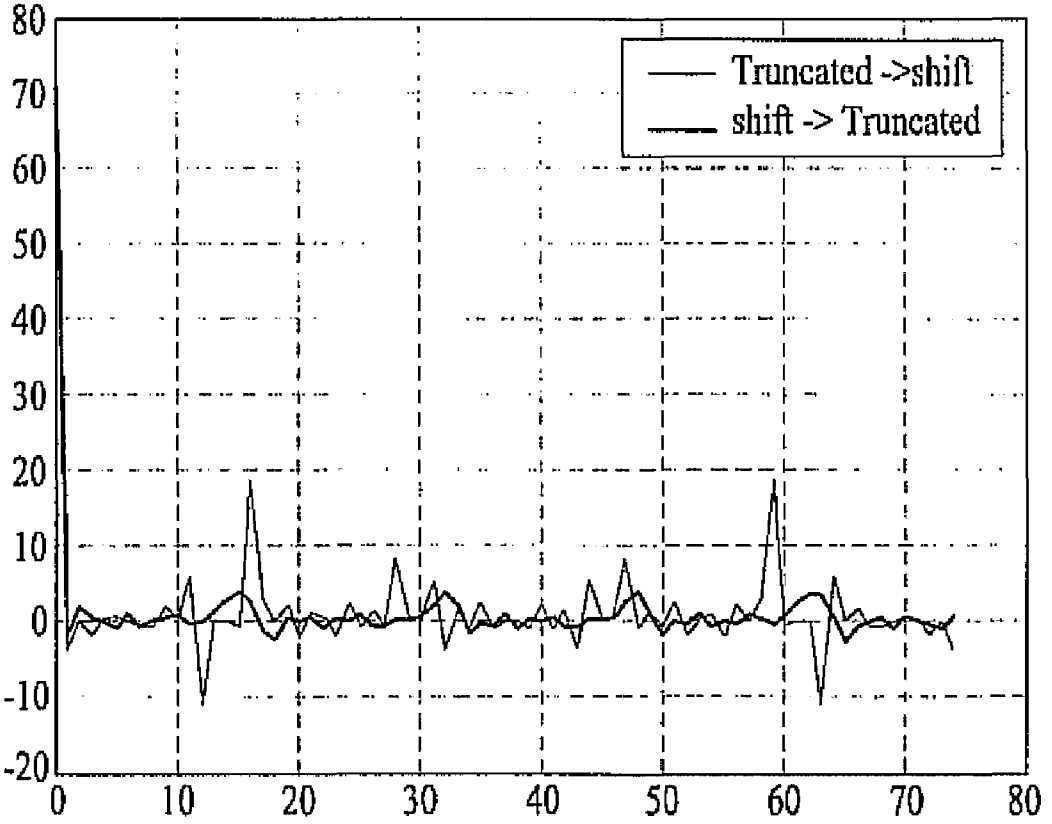
Truncated ->shift
shift -> Truncated
80
70
60
50
40
30
20
10
0
-10
-20
0
10
20
30
40
50
60
70
80

FIG. 19

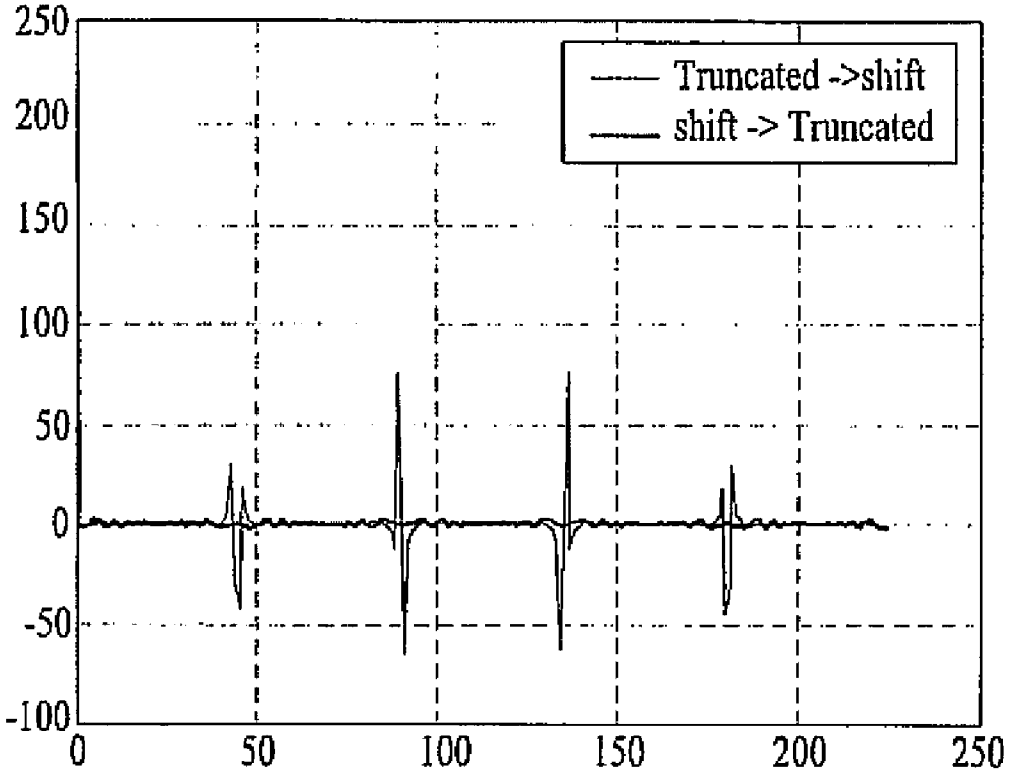
Truncated ->shift
shift -> Truncated
250
200
150
100
50
0
-50
-100
0
50
100
150
200
250

FIG. 20

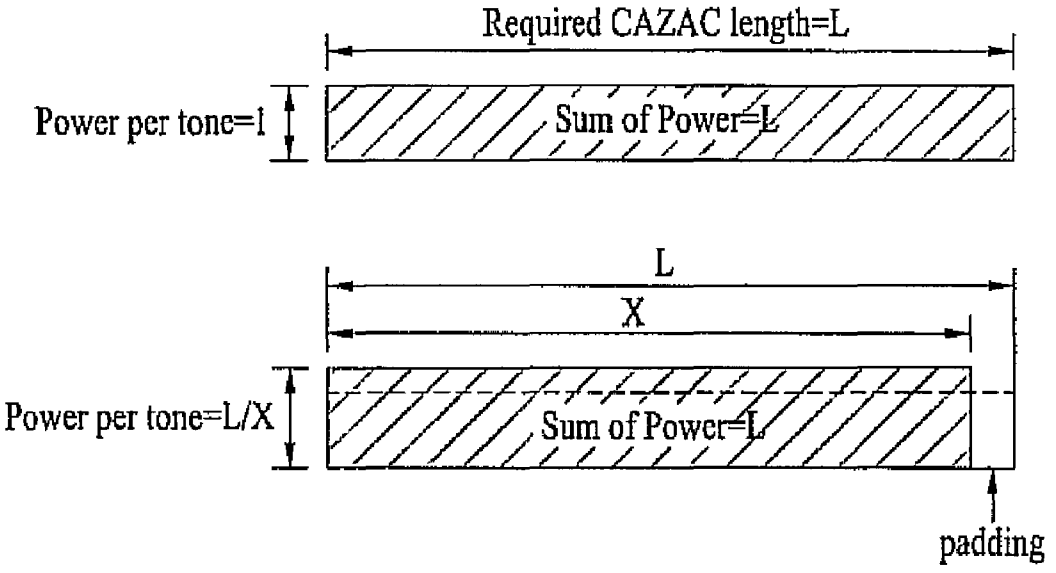
Required CAZAC length=L
Power per tone=1
Sum of Power=L
L
X
Power per tone=L/X
Sum of Power=L
padding

METHOD AND APPARATUS FOR GENERATING AND TRANSMITTING CODE SEQUENCE IN A WIRELESS COMMUNICATION SYSTEM

This application claims the benefit of Korean Application No. P2005-114306, filed on Nov. 28, 2005, Korean Application No. P2006-62467, filed on Jul. 4, 2006, and Korean Application No. P2006-64091, filed on Jul. 7, 2006, which are hereby incorporated by reference.

BACKGROUND OF THE INVENTION

1. Field of the Invention

The present invention relates to a method of generating and transmitting code sequence, and more particularly, to a method and apparatus for generating and transmitting code sequence in a wireless communication system.

2. Discussion of the Related Art

Usually, a pilot signal or a preamble of a wireless communication system is referred to as a reference signal used for initial synchronization, cell search, and channel estimation. Further, the preamble is comprised of a code sequence, and the code sequence is further comprised of orthogonal or quasi-orthogonal which represent good correlation properties.

For example, a Hadamard matrix of 128×128 is used in a portable internet (PI) to insert the code sequence to the frequency domain. In so doing, 127 types of code sequences are used.

Although the Hadmard code sequence and a poly-phase Constant Amplitude Zero Auto-Correlation (CAZAC) code sequence are orthogonal codes, a number of codes used to maintain orthogonality is limited. For example, a number of N orthogonal codes in a N×N Hadamard matrix is N, and a number of N orthogonal codes that can be expressed by the CAZAC codes is N and a prime number smaller than N (David C. Chu, "Polyphase Codes with Good Periodic Correlation Properties," *Information Theory IEEE Transaction on*, vol. 18, issue 4, pp. 531-532, July 1972). With respect to CAZAC sequence types, GCL CAZAC and Zadoff-Chu CAZAC are often used.

If the code sequence is generated using the Hadamard codes, N number of sequence types corresponding to the entire length of the codes is generated. However, the if the code sequence is generated using the CAZAC codes, only half or N/2 number of sequence types are generated.

SUMMARY OF THE INVENTION

Accordingly, the present invention is directed to a method and apparatus for generating and transmitting code sequence in a wireless communication system that substantially obviates one or more problems due to limitations and disadvantages of the related art.

An object of the present invention is to provide a method of generating a code sequence in a wireless communication system.

Another object of the present invention is to provide an apparatus for generating a code sequence in a wireless communication system.

Additional advantages, objects, and features of the invention will be set forth in part in the description which follows and in part will become apparent to those having ordinary skill in the art upon examination of the following or may be learned from practice of the invention. The objectives and other advantages of the invention may be realized and

attained by the structure particularly pointed out in the written description and claims hereof as well as the appended drawings.

To achieve these objects and other advantages and in accordance with the purpose of the invention, as embodied and broadly described herein, a method of generating a code sequence in a wireless communication system includes recognizing a desired length of the code sequence, generating a code sequence having a length different from the desired length, and modifying the length of the generated code sequence to equal the desired length. Here, the step of modifying includes discarding at least one element of the generated code sequence or inserting at least one null element to the generated code sequence.

In another aspect of the present invention, method of generating a code sequence in a wireless communication system includes a recognizing a desired length of a first code sequence, generating a second code sequence having a length different from the desired length of the first code sequence, and modifying the length of the second code sequence to equal the desired length of the first code sequence. Here, the step of modifying includes discarding at least one element of the modified code sequence if the length of the modified code sequence is longer than the desired length of the first code sequence or inserting at least one null element to the modified code sequence if the length of the modified second code sequence is shorter than the desired length of the first code sequence.

In a further aspect of the present invention, an apparatus for generating a code sequence in a wireless communication system includes a sequence selection unit for recognizing a desired length of the code sequence, generating a code sequence having a length different from the desired length, and modifying the length of the generated code sequence to equal the desired length, wherein the sequence selection unit discards at least one element of the generated code sequence or inserts at least one null element to the generated code sequence in modifying the length of the generated code sequence, and a transmitting unit for transmitting the modified generated code sequence via at least one antenna.

It is to be understood that both the foregoing general description and the following detailed description of the present invention are exemplary and explanatory and are intended to provide further explanation of the invention as claimed.

BRIEF DESCRIPTION OF THE DRAWINGS

The accompanying drawings, which are included to provide a further understanding of the invention and are incorporated in and constitute a part of this application, illustrate embodiment(s) of the invention and together with the description serve to explain the principle of the invention. In the drawings;

FIG. **1** illustrates a structure of an apparatus for transmitting data using Orthogonal Frequency Division Multiplexing (OFDM) or OFDM Access (OFDMA) scheme;

FIG. **2** illustrates a structure of an apparatus for receiving data using OFDM/OFDMA scheme;

FIG. **3** is a flow diagram illustrating adjusting a code sequence;

FIG. **4** illustrates cross-correlation properties of the generated code sequence;

FIG. **5** illustrates a generated CAZAC sequence

$a_{N_{seq_N}xN}$

using N (=1024);

FIG. **6** illustrates a cross-correlation properties cumulative distribution function (CDF) of the code sequences that can be generated according to the code sequence

$a_{N_{seq_M}xN}$

and the CAZAC sequence

$a_{N_{seq_N}xN}$

when N=1024;

FIG. **7** illustrates the cross-correlation properties CDF of the code sequences that can be generated based on the CAZAC sequence generated using the prime number of N=1031 and a code sequence set

$a_{N_{seq_M}xN}$

having length of 1024 (seven (7) elements removed);

FIG. **8** illustrates a method of generating CAZAC sequence using a length required by a communication system;

FIG. **9** illustrates a method of generating a CAZAC sequence using a padding portion;

FIG. **10** illustrates an exemplary application of circular shift;

FIG. **11** is an exemplary diagram illustrating application of circular shift to the generated code sequence after the elements of the code sequence are removed;

FIG. **12** is an exemplary diagram illustrating application of circular shift to the generated code sequence prior to removing the elements of the code sequence;

FIG. **13** is an exemplary diagram illustrating application of circular shift to the generated code sequence after a padding portion is attached;

FIG. **14** is an exemplary diagram illustrating application of circular shift to the generated code sequence prior to attaching a padding portion;

FIG. **15** is an exemplary diagram of a padding portion of the code sequence in which the padding portion is used as a lower bandwidth guard interval;

FIG. **16** is a structural diagram for transmitting the code sequence. Depending on whether the transmission of the code sequence is made in a downlink direction or an uplink direction, the structure can be in different form;

FIG. **17** is a structural diagram illustrating a basic code sequence generation unit and a code sequence length adjustment unit;

FIG. **18** illustrates cross-correlation characteristics of the code sequence;

FIG. **19** illustrates cross-correlation characteristics of the code sequence; and

FIG. **20** is an exemplary diagram illustrating boosting the power of the generated code sequence.

DETAILED DESCRIPTION OF THE INVENTION

Reference will now be made in detail to the preferred embodiments of the present invention, examples of which are illustrated in the accompanying drawings. Wherever possible, the same reference numbers will be used throughout the drawings to refer to the same or like parts.

FIG. **1** illustrates a structure of an apparatus for transmitting data using Orthogonal Frequency Division Multiplexing (OFDM) or OFDM Access (OFDMA) scheme. FIG. **2** illustrates a structure of an apparatus for receiving data using OFDM/OFDMA scheme.

In FIG. **1**, traffic data and control data are multiplexed at a muxer **11**. Here, the traffic data is used to provide service from a transmitting end to a receiving end, and the control data is used to facilitate transmission from the transmitting end to the receiving end. The discussion relating to the present invention regarding the code sequence which relates to a type of a code sequence of the control data. The code sequence can be used for initial synchronization, cell search, or channel estimation.

Depending on the communication system, the code sequence can be used in various forms. For example, the code sequence in an IEEE 802.16 wideband wireless access system can be used in a preamble or a pilot signal format, and in a multi-input, multi-output (MIMO) system, the code sequence can be used as a midamble format.

After being processed at the muxer **11**, the multiplexed traffic and control data is then channel coded by a channel coding module **12**. Channel coding is used to allow the receiving end to correct error that can occur during transmission by adding parity bits. Examples of channel coding include convolution coding, turbo coding, and low density parity check (LDPC) coding.

Thereafter, the channel coded data is modulated by a digital modulation module **13** in which data symbols are mapped using algorithms such as a quadrature phase shift keying (QPSK) or a 16-quadrature amplitude modulation (16 QAM). The mapped data symbols are then processed by a subchannel modulation module **14** through which the data symbols are mapped to each subcarrier of the OFDM system or OFDMA system. Then, the data symbols mapped to subcarriers are processed by an inverse fast Fourier transform (IFFT) module **15** which transform the data symbols into a signal in a time domain. The transformed data symbols are then processed through a filter **16** and further processed through a digital-to-analog conversion (DAC) module **17** where the filtered data symbols are converted to analog signals. Lastly, the analog signals are converted into a radio frequency (RF) by a RF module **18** which is then transmitted via an antenna **19** to the receiving end.

Based on the type of generated code (e.g., CAZAC code), the steps of channel coding and/or symbol mapping can be omitted. FIG. **2** illustrates a receiving end whose processes are inverse to those of the transmitting end.

A code sequence is used for transmitting control information, which includes identification (ID) and synchronization information, to classify types of sequences in a communication system. In order for more effective reception of the control information using code sequence, the code sequence can be adjusted or modified. Further, the code sequence can be applied to all of the channels that use code sequence for control signaling such as a random access channel (RACH),

downlink/uplink reference symbol, channel quality information (CQI), and Acknowledgement (ACK)/Negative Acknowledgement (NACK).

FIG. **3** is a flow diagram illustrating adjusting a code sequence. More specifically, a length of the code sequence is defined as N, a number of codes in the code sequence is defined as N_{seq_N}, and a code sequence set defined as

$$a_{N_{\text{seq_N}}xN}.$$

In operation, the code sequence set

$$a_{N_{\text{seq_N}}xN}$$

having N_{seq_N} number of codes can be extended to a code sequence set

$$a_{N_{\text{seq_M}}xN}$$

having N_{seq_M} number of codes.

Equation

$$a_{N_{\text{seq_N}}xN}$$

is a matrix of N_{seq_N}×N of

$$a_{N_{\text{seq_N}}xN} = \left[a^0_{N_{\text{seq_N}}xN}\, a^1_{N_{\text{seq_N}}xN} \ldots a^{N_{seq}-1}_{N_{\text{seq_N}}xN}\right]^T, \text{ and } a^k_{N_{\text{seq_N}}xN}$$

is a row vector of

$$a^k_{N_{\text{seq_N}}xN} = \left\lfloor a^k_{N_{\text{seq_N}}xN}(0)\, a^k_{N_{\text{seq_N}}xN}(1) \ldots a^k_{N_{\text{seq_N}}xN}(N-1)\right\rfloor.$$

Furthermore,

$$a^k_{N_{\text{seq_N}}xN}(n)$$

indicates n(=0, 1, 2, . . . , N−1) element of k(=0, 1, 2, N_{seq_N}−1) code sequence.

Referring to FIG. **3**, a code sequence set

$$a_{N_{\text{seq_M}}xM},$$

having N_{seq_M} number of code sequence(s) where each code sequence has length M, can be generated based on the code generation algorithm based on code type in which a value of length M is a natural number greater than a value of length N (S**301**). Here, the code types include Hadamard code, Pseudo Noise (PN) code, and a Constant Amplitude Zero Auto-Correlation (CAZAC) code, among others to be used for initial synchronization, cell search, and channel estimation in the wireless communication system. The code sequence set having length M per each code type can be generated by various schemes as discussed. As for the CAZAC code, the value of length M is a smallest prime number greater than the value of length N, preferably.

Subsequently, a code sequence set

$$a_{N_{\text{seq_M}}xN},$$

having N_{seq_M} number of code sequences, can be generated where a resulting length of the code sequence is length N. More specifically, the code sequence set

$$a_{N_{\text{seq_M}}xM},$$

having N_{seq_M} number of code sequences where each code sequence has length M (from step S**301**), can have elements of the code sequence removed. That is, elements which comprise each code sequence can be removed from the code sequence allowing the length of the code sequence to be adjusted or shortened. Here, M−N number of elements can be removed from the code sequence whose length corresponds to length M. By removing elements from the code sequence with length M, a code sequence having length N can be generated. As discussed, N is smaller than M. Consequently, a code sequence set

$$a_{N_{\text{seq_M}}xN},$$

having N_{seq_M} number of code sequences in which each code sequence has length N, can be generated (S**302**).

A code sequence is used for transmitting control information, which includes identification (ID) and synchronization information, to classify types of sequences in a communication system. Currently in 3rd Generation Partnership Project (3GPP) Long Term Evolution (LTE), a CAZAC sequence is being considered.

The CAZAC sequence can be used by channels to output various IDs and information. The channels include channels for downlink synchronization (e.g., primary synchronization channel, secondary synchronization channel, and broadcast channel), uplink synchronization (e.g., random access channel), and pilot channels (e.g., data pilot and channel quality pilot). Further, the CAZAC sequence can be used in scrambling as well as channels that use code sequence such as RACH.

Although there are various types of the CAZAC sequences, there are two types of often used CAZAC sequences—GCL CAZAC and Zadoff-Chu CAZAC. The Zadoff-Chu CAZAC sequence can be defined by the following equations.

$$c(k; N, M) = \exp\left(\frac{j\pi Mk(k+1)}{N}\right) (\text{for odd } N) \qquad \text{[Equation 1]}$$

-continued

$$c(k;N,M)=\exp\left(\frac{j\pi Mk^2}{N}\right)\ (\text{for even } N) \quad \text{[Equation 2]}$$

Here, k denotes sequence index, N denotes a length of CAZAC to be generated, and M denotes sequence ID.

If the Zadoff-Chu CAZAC sequence and the GCL CAZAC sequence are expressed by c(k;N,M) as shown in Equations 1 and 2, then the sequences have the following three (3) characteristics as presented in following equations.

$$|c(k;N,M)|=1\ (\text{for all } k,N,M) \quad \text{[Equation 3]}$$

$$R_{M;N}(d)=\begin{cases}1, & (\text{for } d=0)\\ 0, & (\text{for } d\neq 0)\end{cases} \quad \text{[Equation 4]}$$

$$R_{M_1,M_2;N}(d)=p\ (\text{for all } M_1, M_2 \text{ and } N) \quad \text{[Equation 5]}$$

According to Equation 3, the CAZAC sequence always has a size of 1, and the CAZAC sequence of Equation 4 has an auto-correlation function denoted by a delta function. Here, the auto-correlation is based on circular correlation. Further, Equation 5 is a cross-correlation which is constant if N is a prime number,

If the length to be applied in the wireless communication system for generating the CAZAC sequence is denoted by L, a method for generating the CAZAC sequence sets N of Equations 1 and 2 to equal L (N=L)—identified as step (1). Step (2) can be identified by a method where a value of N is set to be a prime number greater than a value of length L for generating the CAZAC sequence.

Referring to the characteristics of the generated CAZAC sequence having a specified length of L, if L is not a prime number, the generated CAZAC sequence can include M=1, 2, . . . L−1 number of codes, some of which are repeated codes. In other words, the number of different codes is less than L−1 number of codes. On the contrary, if L is a prime number, there is L−1 number of different codes. The above descriptions may also be applied to other types of code sequences and are not limited to Zadoff-Chu CAZAC sequence.

Further, the following technique has been considered. More specifically, if the length of code to be applied to the system is not a prime number, and there are a large number of codes to be used, a smallest prime number greater than L was selected. Using the selected prime number, the CAZAC sequence was generated, and discards or removes at least one element of the generated CAZAC sequence for use. This technique is different than the technique introduced with respect to step 1.

For example, assume that a number of codes of a CAZAC code sequence (N) is 1024. The following equation can be used to express an algorithm for generating a Zadoff-Chu CAZAC code.

$$a^{index(A)}(n)=\begin{cases}\exp\left(i\frac{A\pi n(n+1)}{M}\right), & \text{when } M \text{ is odd}\\ \exp\left(i\frac{A\pi n^2}{M}\right), & \text{when } M \text{ is even}\end{cases} \quad \text{[Equation 6]}$$

where $n=0,1,2,\ldots,M-1$

In Equation 6, A and M are natural numbers, and index(A) (=0, 1, 2, . . . , $N_{seq_M}-1$) is an index of A in ascending order. In order to extend the CAZAC sequence where N=1024, a smallest prime number greater than 1024 is used. That is, the smallest prime number greater than 1024 is 1031. As such, the code sequence set

$$a_{N_{\text{seq_M}}xM}$$

where M=1031 is applied to Equation 6.

Since M (=1031) is a prime number, N_{seq_M}=1030. Furthermore, A can be referred to as a seed value used to generate a code sequence maintaining CAZAC properties. If M is a prime number, a total of M−1 number of code sequences can be generated. In other words, for example, if M=1024, a total of 512 (=1024/2 or N/2) number of code sequences are generated. However, if M=1031, a total of 1030 number of code sequences (M−1) are generated. Moreover, the cross-correlation properties of the generated code sequence are better if M is a prime number than a composite number.

In order to adjust or modify the CAZAC code sequence set

$$a_{N_{\text{seq_M}}xM}$$

where M=1031 to a code sequence set

$$a_{N_{\text{seq_M}}xM}$$

whose length is N=1024, M−N number of elements can be removed from index n=N, . . . , M−1, generating a code sequence set

$$a_{N_{\text{seq_M}}xN},$$

In determining the value of M, although the number of code sequences can increase with increase in value of N, it is preferable to determine the value of M based on the code sequence whose length is N that promotes maintenance of good correlation properties. In case of the CAZAC code, optimum correlation properties can be attained if the value of length M is the smallest prime number greater than the value of length N.

If the code sequence set

$$a_{N_{\text{seq_M}}xN}$$

generated using length N=1024 is compared with the code sequence set

$$a_{N_{\text{seg_M}}xN},$$

a total number code sequences of the former can be represented by N/2 or 512 (=1024/2) code sequences having an

index 0, 1, 2, . . . , N/2−1(N=1024), and a total number of code sequences of the latter can be represented by M−1 or 1030 having an index 0, 1, 2, . . . , M−2 (M=1031).

FIG. **4** illustrates cross-correlation properties of the generated code sequence. More specifically, the cross-correlation properties of

$$a^{k}_{N_{\text{seq_M}}xN}(k = 1, 2, \cdots, N_{\text{seq_M}} - 1)$$

associated with the remaining N_{seq_M}(1029) code sequences for

$$a^{0}_{N_{\text{seq_M}}xN}$$

code sequence of the code sequence set

$$a_{N_{\text{seq_M}}xN}.$$

The figure illustrates this with respect to amplitude, code index, and time index.

Further, FIG. **5** illustrates a generated CAZAC sequence

$$a_{N_{\text{seq_N}}xN}$$

using N(=1024). More specifically, the figures illustrate cross-correlation properties of

$$a^{k}_{N_{\text{seq_M}}xN}(k = 1, 2, \cdots, N_{\text{seq_M}} - 1)$$

regarding the remaining N_{seq_N}(511) code sequences. The figure illustrates this with respect to amplitude, code index, and time index. Between FIG. **4** and FIG. **5**, the cross-correlation properties of the generated code sequence of FIG. **4** are better.

FIG. **6** illustrates a cross-correlation properties cumulative distribution function (CDF) of the code sequences that can be generated according to the code sequence

$$a_{N_{\text{seq_M}}xN}$$

and the CAZAC sequence

$$a_{N_{\text{seq_N}}xN}$$

when N=1024.

FIG. **7** illustrates the cross-correlation properties CDF of the code sequences that can be generated based on the CAZAC sequence generated using the prime number of N=1031 and a code sequence set

$$a_{N_{\text{seq_M}}xN}$$

having length of 1024 (seven (7) elements removed). The performance lines of FIGS. **4-7** indicate that the code sequence set with seven (7) elements removed has equivalent cross-correlation properties compared to the original code sequence set.

As discussed, the codes in addition to the CAZAC code are available, such as the PN code and the Hadamard code. The discussion with respect to the CAZAC code sequence can also be applied to the PN code and the Hadamard code. With respect to the PN code, a modular shift register generator is used to generate the code sequences. If a number of shift registers generated is represented by N, a code sequence having a length of 2^N-1 is generated. Thereafter, a value "1" is added to the shift register, resulting in a length $2^{N+1}-1$, and then, adjust the length to equal 2^N.

With respect to the Hadamard codes, a number of code sequences, which equal the length of the code sequence, make up a code sequence. However, for example, if M number of code sequences having length N is required (M>N), then M number of code sequences having length M are generated, followed by removing a specified number of elements to make the length of the code sequence equal length N.

FIG. **8** illustrates a method of generating CAZAC sequence using a length required by a communication system. That is, the required (or desired) length of the CAZAC sequence can be represented by length L. Further, the codes types can be extended. However, since a generated code sequence can be truncated or have elements discarded to correspond to the desired length L, the auto-correlation and cross-correlation properties of the truncated code sequence can experience deterioration. Similarly, even if a code sequence portion is added/attached to the generated code sequence (e.g., zero-padding or cyclic prefix) to correspond to the desired length L, the auto-correlation and cross-correlation properties can experience deterioration. Here, auto-correlation properties relate to the auto-correlation value being 1 when the delay is 0. Otherwise, the auto-correlation value is 0 when the delay is a value other than 0. Further, the cross-correlation properties having a constant value is negatively affected.

Assuming that the code sequence having poor auto-correlation and cross-correlation properties are removed, the remaining number of code sequences may be less than L−1.

In order to attain a desired length and a maximum number of CAZAC sequence types corresponding to the desired length, a smallest prime number, X, greater than the desired length, L, (X>L) can be selected. Although the CAZAC sequence can be generated using X, due to deterioration of the correlation properties, the correlations properties of CAZAC sequence as shown in Equations 4 and 5 cannot be attained. Further, when selecting a length of the generated code sequence, the length that is nearest to the desired length L which is between a smallest prime number larger than the desired length or a largest prime number smaller than the desired length can be selected.

Referring to FIG. **8**, the generated CAZAC sequence has length X. Thereafter, the generated CAZAC sequence having length X has elements of the code sequence removed (or truncated) so as to make the length of the generated CAZAC sequence correspond to the desired length L.

FIG. **9** illustrates a method of generating a CAZAC sequence using a padding portion. As discussed, the gener-

ated CAZAC sequence is truncated. With respect to auto-correlation and cross correlation properties, delay of 0 indicates an auto-correlation value of 1, as shown in Equation 4, and a delay not equaling 0 indicates a value of 0. Moreover, the properties where the cross-correlation value is always a prime number is not deteriorated whereby effective correlation is maintained. Further, additional control information can be transmitted by using the information inputted to the fading unit.

Referring to FIG. **9**, the generated CAZAC sequence has length X. Here, the value of X is a largest prime number less than the value of L. In other words, X is a prime number less than L. Thereafter, the generated CAZAC sequence having length X has elements added or a padding portion added to the CAZAC sequence in order to make the length of the generated CAZAC sequence corresponding to the desired length L. Here, C**1** represents the length of the CAZAC sequence having length X, and C**2** represents the padding portion. By combining C**1** and C**2** (C**1**+C**2**), the generated CAZAC sequence can have a length corresponding to the desired length L.

FIG. **10** illustrates an exemplary application of circular shift. The circular shift is typically applied to increase an amount of control information transmitted to the communication system. For example, a back portion of the sequence is re-allocated to a front portion of the sequence, and the remaining sequence is shifted in the direction of the back portion of the sequence in an amount (or length) corresponding to the re-allocated back portion, as illustrated in FIG. **10**. Further, if specified control information is applied the circular shift as described above, the amount of control information that can be transmitted via a corresponding sequence increases.

Discussions of above relate to the methods of generating the sequence using the desired length L, and of increasing transmitted control information using the circular shift. If these methods are applied in generating the sequence, the following processes take place. First, select a smallest prime number greater than L or a largest prime number less than L, which is referred to as X. Second, remove or add a sequence unit having a length corresponding to X−L or L−X. Third, apply the circular shift to the resulting sequence.

FIG. **11** is an exemplary diagram illustrating application of circular shift to the generated code sequence after the elements of the code sequence are removed. Referring to FIG. **11**, the code sequence **1102** is generated based on length X which is the smallest prime number greater than length L. In other words, the generated code sequence **1102** has a length equaling length X which is longer than the desired length L. From the generated code sequence **1102**, a portion having a length corresponding to length X−L is removed, resulting in a code sequence having length L **1103**. Thereafter, the result of the generated code sequence **1103** having length L is applied circular shift thereto, resulting in the code sequence **1104**.

FIG. **12** is an exemplary diagram illustrating application of circular shift to the generated code sequence prior to removing the elements of the code sequence. In other words, circular shift is performed to the generated CAZAC sequence having length X; and after circular shift is performed, the elements of the code sequence are removed.

Referring to FIG. **12**, the code sequence **1202** is generated based on length X which is the smallest prime number greater than length L. In other words, the generated code sequence **1202** has a length equaling length X which is longer than the desired length L. A circular shift is then performed to the generated code sequence **1203** having length X. Thereafter, a portion of the generated code sequence having a length corresponding to length X−L is removed, resulting in a code sequence **1204** having length L.

Equation 8 is used to acquire cross-correlation value(s) of a code sequence whose ID is M_2, from the received code sequence whose sequence ID is M_1. Through the acquired value, synchronization can be achieved.

Typically, if the wireless communication system is a synchronous network, auto-correlation is used to acquire synchronization information, and if the system is an asynchronous network, cross-correlation is used to acquire synchronization information. However, according to the embodiments of the present invention, synchronization information can be acquired using any one or at least one of the correlation schemes.

After the synchronization information of the received code sequence is acquired, the receiving end analyzes the received code sequence to acquire the sequence ID, as shown in Equations 9 and 10.

$$\sigma c(k; M, X) = c(k+1; M, X) \cdot c^*(k; M, X) \text{ (for } k = 0, 1, \ldots, L-1) \quad \text{[Equation 9]}$$

$$\sigma c(k; M, X) = c(k+1; M, X) \cdot c^*(k; M, X) \text{ (for } k = 0, 1, \ldots, X-1) \quad \text{[Equation 10]}$$

In Equations 9 and 10, σc(k;M,X) denotes difference sequence of the received sequences. Equation 9 is used to acquire the ID information of the received sequence using the differential sequence corresponding to the total length of the received sequence. Equation 9 can also be used to acquire the ID information of the code sequence which has been generated with the cyclic prefix/postfix padded portion. Equation 10 is used

FIG. **13** is an exemplary diagram illustrating application of circular shift to the generated code sequence after a padding portion is attached. Referring to FIG. **13**, the code sequence **1302** is generated based on length X which is the largest prime number smaller than the value of length L. To the generated CAZAC sequence **1302**, a padding portion is added **1303**. The length of the padding portion corresponds to a length L−X. As discussed, the padding portion can be comprised of zeroes or cyclic prefix/postfix. With the addition of the padding portion, the length of the CAZAC sequence equals the desired length L. Thereafter, the result of the generated code sequence having length L **1303** is applied circular shift thereto, resulting in the CAZAC sequence **1304**.

FIG. **14** is an exemplary diagram illustrating application of circular shift to the generated code sequence prior to attaching a padding portion. In other words, circular shift is performed to the generated CAZAC sequence having length X, and after circular shift is performed, the padding portion is attached.

Referring to FIG. **14**, the code sequence **1402** is generated based on length X which is the largest prime number smaller than the value of the desired length L. To the generated CAZAC sequence **1402**, circular shift is performed. The circularly-shifted CAZAC sequence **1403** still has length X. To the CAZAC sequence **1403**, a padding portion is added, resulting in the CAZAC sequence **1404**. The length of the padding portion corresponds to a length L−X. As discussed, the padding portion can be comprised of zeroes or cyclic prefix/postfix. With the addition of the padding portion, the length of the CAZAC sequence **1404** equals the desired length L.

Between FIGS. **11** and **12**, the difference is that circular shift is performed either before or after the elements of the CAZAC sequence are removed, By performing circular shift before removing the elements (or adjusting the length to equal the desired length), correlation deterioration can be reduced. To put differently, the CAZAC sequence does not have discontinuous codes.

Between FIGS. **13** and **14**, the difference is that circular shift is performed either before or after the padding portion is added to the generated CAZAC sequence. By attaching the padding portion after performing circular shift, better correlation properties can be attained, especially since the padding portion is placed at the end of the code sequence.

Further, according to the discussion above, the desired length L (or required length) is first recognized. As illustrated with respect to FIGS. **11-14**, the generated code sequence is adjusted/modified based on the desired length L. Based on that, after the desired length L recognized, a determination can be made as to whether the generated length X should be shortened or extended. In other words, the determination can be made whether to remove or discard at least one element of the generated code sequence or to add or insert at least one element to the generated code sequence. As discussed, the elements to be inserted can be a null (0) element (e.g., zero padding) or cyclic prefix/postfix, for example. In order to make the determination between discarding the element(s) or adding the element(s), the system can choose to select the length closest to the desired length L.

For example, if the desired length L is 75, the value of the smallest prime number greater than 75 is 79, and the value of the largest prime number smaller than the 75 is 73. Here, the prime number 73 can be selected since 73 is closer to 75 than 79 is to 75.

Although the illustration above selects the prime number closest to the desired length L, selection regarding removal or addition of the element(s) is not limited to the example of above and other implementations may be applied.

Regarding padding, there are five (5) schemes by which padding can be accomplished. As a first padding scheme, the padding portion can be comprised of a constant number (e.g., 0s). Although the padding portion is used to fill the portion of the code sequence so that the length of the code sequence coincides with the desired length, it is possible for the padding portion to be less then completely full. In other words, it is possible for that the length of the code sequence with padded portion is not equal to or is shorter than the code sequence with the desired length. That is, when the code sequence is used for functions deemed less important, such as for cell search or random access, it is not necessary to use the entire length of the code sequence, and as such, the padding portion does not need to be completely occupied to correspond to the desired length of the code sequence.

As a second padding scheme, the padding portion can be comprised of a repeated portion. In other words, the portion corresponding to L−X of the code sequence **1204** can be duplicated and inserted/attached to the end of the code sequence **1204**. This can be referred to as cyclic postfix. Here, the code sequence uses the entire length L. When determining the identification (ID) of the code sequence, the entire length L is used to facilitate identifying of the code sequence ID. At the same time, the generated code sequence does not experience distortion by using the entire length L. In the discussion above, the cyclic postfix is used. Alternatively, cyclic prefix can also be used.

As a third padding scheme, the padding portion can be comprised of additional information through which different messages can be delivered. More specifically, the desired length L of the code sequence can be used to generate a supplemental code sequence whose length equals the desired length L (N=L). The code sequence portion corresponding to L−X is extracted from the supplemental code sequence and inserted/attached to the generated code sequence as the padded portion.

As a fourth padding scheme, a portion corresponding to length L−X is extracted from the code sequence and inserted as the padding portion. Here, the code sequence inserted to the padding portion may be a different code sequence than the code sequence **1204**. Put differently, the code sequence inserted to the padding portion may be a CAZAC sequence having a length of M, for example, which is different from the code sequence **1204** having a length of L. Further, the code sequence inserted to the padding portion can be a different code sequence other than the CAZAC sequence. By using different code sequence, additional information can be delivered including information related to type of code sequence adjustments.

As a fifth padding scheme, the padding portion can be used as lower bandwidth guard interval. During transmission of control information using a prescribed sequence, the following possible scenarios can occur such as transmitting data without establishing synchronization with an access channel, transmitting data by a plurality of users within a communication system, and distortion of frequency of the received data.

Furthermore, the padding portions can be placed at both ends of the code sequence to use the padding portions as guard intervals of the lower bandwidth. Consequently, a more reliable acquisition of control information from the received data can take place despite distorted frequency signals. In the padding portions used as guard intervals, constant numbers (e.g., 0s) can be used or cyclic prefix or postfix of the generated code sequence can be used.

If the padding portions are placed at both ends of the code sequence and used as guard intervals of the lower bandwidth, the code sequences can be protected from frequency signal distortions. Moreover, if 0s are inserted between the guard intervals or put differently, within the code sequence, interference to neighboring codes can be reduced. Alternatively, if cyclic prefix/postfix is used as guard intervals, the code sequences can be protected from frequency distortions and can be used to transmit the control information containing the sequence ID if there is no frequency distortion.

FIG. **15** is an exemplary diagram of a padding portion of the code sequence in which the padding portion is used as a lower bandwidth guard interval. Referring to FIG. **15**, the code sequence **1501** can be divided into three (3) parts—a portion (C**1**), which is generated based on length X and the other two portions (C**2** and C**3**) are attached to both ends of the code sequence **1501**.

In the discussions above, five (5) padding schemes are introduced. However, the padding schemes are not limited to the discussed schemes, and there can be other types of padding schemes,

Besides the first padding scheme in which no information is inserted, the other four padding schemes insert additional information in the padding portions to allow expansion of the code sequence and/or transmission of message(s). Various information can be inserted into the padding portion including, for example, initial access information, timing update information, resource request information, user ID information, channel quality information (CQI), user group ID information related to a random access channel (RACH). Furthermore, the information can include cell ID information, multi-input multi-output (MIMO) information, and

synchronization channel information of a synchronization channel (SCH), for example. In addition, the padding portion can be used for transmitting data for message transmission as well as arbitrary information using a code sequence having a length of L−X.

FIG. **16** is a structural diagram for transmitting the code sequence. Depending on whether the transmission of the code sequence is made in a downlink direction or an uplink direction, the structure can be in different form. With that, FIG. **16** is described with respect to a general transmitting end for transmitting the control signal.

Referring to FIG. **16**, the transmitting end **1601** comprises a sequence selection unit **1602** and a transmitting unit **1603**. The sequence selection unit **1602** is used to generate the code sequence for transmitting the control information. More specifically, the sequence selection unit **1602** performs an operation to select a code sequence having a desired length of L. In other words, the sequence selection unit **1602** stores the value of the desired length L, and then selects an appropriate code sequence for expressing the control information to be transmitted where the code sequence has a length of L.

The code sequence that can be selected by the sequence selection unit **1602** has a length of L as illustrated in FIGS. **12** and **14** (e.g., code sequence **1204** and code sequence **1404**). Moreover, the code sequence is applied circular shift (e.g., code sequences **1203** and **1403**) to which a padded portion corresponding to lengths L−X or X−L is removed or inserted/added. As a result, discontinuous parts are not formed within or in the code sequence to promote superior correlation characteristics.

Although it is preferable to use length X which is a smallest prime number greater than the length of L or a largest prime number smaller than the length of L, as long as the value of length X is a prime number, different or other prime numbers can be used as the value of length X.

FIG. **17** is a structural diagram illustrating a basic code sequence generation unit and a code sequence length adjustment unit. In FIG. **17**, the basic code sequence generation unit **1701** further comprises a code sequence generation unit **1701***a* and a circular shift application unit **1701***b*. The code sequence generation unit **1701***a* is used to generate a first code sequence (C**1**). Here, C**1** can be defined as a code sequence having a length of X where the value of length X is a smaller prime number larger than the value of length L or a code sequence having a length of X where the value of length X is a larger prime number smaller than the value of length L. C**1** is then applied circular shift by the circular shift application unit **1701***b*. More specifically, the circular shift application unit **1701***b* receives C**1** having length of X, applies circular shift, and outputs a second code sequence (C**2**) to the code sequence length adjustment unit **1702**.

The code sequence length adjustment unit **1702** further comprises a control unit **1702***a*, a code sequence removing unit **1702***b*, and a padding unit **1702***c*. More specifically, the control unit **1702***a* receives C**2** as well as the value of length L. The control unit **1702***a* determines whether to remove a portion/section of C**2** or insert/add a portion/section to C**2**. Based on the determination from the control unit **1702***a*, C**2** is delivered to the sequence removing unit **1702***b* in which a portion/section of C**2** corresponding to a length of X−L is removed. Alternatively, C**2** can be delivered to the padding unit **1702***c* for inserting/adding a portion/section of C**2** whose length corresponds to the length of L−X.

If C**2** and the value of length L are provided to the control unit **1702***a*, the control unit **1702***a* compares the value of length X which identifies the length of C**2** with the value of the length L. Here, if X is greater than L, then C**2** is inputted into the sequence removing unit **1702***b*. From C**2**, the portion length of C**2** corresponding to length X−L is removed, resulting in C**3**. However, if X is less than L, then C**2** is inputted into the padding unit **1702***c*. From C**2**, the padding portion length corresponding to length L−X is inserted/added to C**2**, resulting in C**4**. Here, the padding portion can be inserted to either end or both ends of C**2**.

FIGS. **18** and **19** illustrate cross-correlation characteristics of the code sequence. The illustrations of FIGS. **18** and **19** is based on the value of length X being the smallest prime number greater than the value of the desired length L; however, the illustrations are not limited to the smallest prime number greater than length L but can have a prime number value of length X smaller than the value of length L.

Referring to FIGS. **18** and **19**, the x-axis represents values of circular shift while the y-axis represents un-normalized cross-correlation values. Furthermore, a thinner line represents the value of cross-correlation of the code sequence with circular shift applied thereto after a code sequence portion having the length X−L is removed. A darker/thicker line represents values of code sequence to which circular shift is applied prior to removing the code sequence portion corresponding to the length X−L. More specifically, FIG. **7** illustrates a graph where L is 75 and X is 79 which is the smallest prime number greater than 75. Moreover, FIG. **8** illustrates a graph where L **8** is 225 and X is 227 which is the smallest prime number greater than 225.

In FIGS. **18** and **19**, if the value of circular shift is 0 or put differently, if there is no shift, then high correlation value is indicated only when the auto-correlation value of the code sequence corresponds and in other cases, moderate correlation is maintained. On the contrary, if the code sequence has a section corresponding to length X−L is removed and thereafter applied circular shift, severe fluctuations occur with correlation values, resulting in deteriorated correlation characteristics. As such, if cross-correlation is used to analyze the code sequence, the code sequence according to the embodiments of the present invention shows superior performance and outcome to that of the conventional code sequence.

FIG. **20** is an exemplary diagram illustrating boosting the power of the generated code sequence. As discussed, the code sequence is generated based on length X, and a padding portion, whose length corresponds to length L−X, is attached to the code sequence (e.g., CAZAC sequence). Thereafter, the portion of the code sequence corresponding to length X is used where length L is divided by length X(L/X). The result of the division is the amount of power that can be boosted. Moreover, the amount of power that can be boosted can be applied to the code sequence whose length is length X. When the receiving end receives power boosted code sequence, more effective detection performance can be achieved since interference is reduced.

However, regarding a code sequence generated with a padding portion with cyclic prefix/postfix attached thereto, there is no need to power boost since all of the code sequences corresponding to length L are used for acquiring sequence ID information.

In the receiving end, information related to the generated code sequence and length X used to generate the code sequence is received. From the code sequence, a portion corresponding to length X is processed to acquire the control information. To this end, it is important to first receive synchronization information of the received data. Equation 7 and Equation 8 can be used to acquire synchronization information. Here, Equation 7 relates to auto-correlation, and Equation 8 relates to cross-correlation.

$$R_{M:N}(d) = \sum_{k=0}^{X-1} c(k, M, X) \cdot c^*(\mathrm{mod}(k+d), X); M, X) \quad \text{[Equation 7]}$$

$$R_{M_1:M_2:N}(d) = \sum_{k=0}^{X-1} c(k, M_1, X) \cdot c^*(\mathrm{mod}(k+d), X); M_2, X) \quad \text{[Equation 8]}$$

Equation 7 is used to acquire auto-correlation value(s) from the received code sequence whose sequence ID is M. Further, the acquired auto-correlation value d, which is a value other than 0, is used to achieve synchronization. to acquire the ID information of the received sequence using the smallest prime number corresponding to length X.

As discussed, if the differential sequence of the CAZAC sequence is calculated using Equations 9 or 10, k of the sequence index is generated, and the result therefrom is transformed by the Fourier transform scheme, to show a single peak value. Thereafter, by detecting the peak value, the ID information of the sequence can be acquired.

The discussion of above regarding a code sequence or a code sequence set can be applied to 3rd Generation Partnership Project (3GPP) system or 3GPP2 system as well as a Wibro system or a Wimax system.

It will be apparent to those skilled in the art that various modifications and variations can be made in the present invention without departing from the spirit or scope of the inventions. Thus, it is intended that the present invention covers the modifications and variations of this invention provided they come within the scope of the appended claims and their equivalents.

What is claimed is:

1. A method for transmitting a code sequence from a transmitting party to a receiving party in a wireless communication system, the method comprising:

acquiring a code sequence having a second length by a cyclic extension of a code sequence having a first length;

performing a circular shift to the code sequence having the second length; and

transmitting the circular shifted code sequence having the second length to the receiving party,

wherein the first length is a largest prime number smaller than the second length, and

wherein the cyclic extension of the code sequence having the first length is performed such that a part of the code sequence having the first length, having a length corresponding to a difference between the first length and the second length, is added to either a start or an end of the code sequence having the first length, and

wherein the circular shift is performed to the code sequence having the second length such that either a rear portion of the code sequence having the second length moves to a start of the code sequence having the second length, or a front portion of the code sequence having the second length moves to an end of the code sequence having the second length.

2. The method according to claim **1**, wherein the part of the code sequence having the first length comprises at least a cyclic prefix or a cyclic postfix.

3. The method according to claim **1**, wherein the cyclic extension is performed such that a cyclic postfix of the code sequence having the first length, having the length corresponding to the difference between the first length and the second length, is added to the end of the code sequence having the first length.

4. The method according to claim **1**, wherein the code sequence having the first length is a Zadoff-Chu (ZC) sequence.

5. The method according to claim **1**, wherein the code sequence having the second length is transmitted as a reference signal sequence.

6. An apparatus for transmitting a code sequence in a wireless communication system, the apparatus comprising:

a code sequence generator for generating a code sequence having a second length by cyclic extension of a code sequence having a first length, and performing a circular shift to the code sequence having the second length; and

a transmitting unit for transmitting the circular shifted code sequence having the second length,

wherein the first length is a largest prime number smaller than the second length,

wherein the cyclic extension of the code sequence having the first length is performed such that a part of the code sequence having the first length, having a length corresponding to a difference between the first length and the second length, is added to either a start or an end of the code sequence having the first length, and

wherein the circular shift is performed to the code sequence having the second length such that either a rear portion of the code sequence having the second length moves to a start of the code sequence having the second length, or a front portion of the code sequence having the second length moves to an end of the code sequence having the second length.

7. The apparatus according to claim **6**, wherein the part of the code sequence having the first length comprises at least a cyclic prefix or a cyclic postfix.

8. The apparatus according to claim **6**, wherein the cyclic extension is performed such that a cyclic postfix of the code sequence having the first length, having the length corresponding to the difference between the first length and the second length, is added to the end of the code sequence having the first length.

9. The apparatus according to claim **6**, wherein the code sequence having the first length is a Zadoff-Chu (ZC) sequence.

10. The apparatus according to claim **6**, wherein the code sequence having the second length is transmitted as a reference signal sequence.

11. A method for transmitting a code sequence in a wireless communication system, the method comprising:

performing a circular shift to a code sequence having a first length to produce a circularly-shifted code sequence having the first length;

performing a cyclic extension of the circularly-shifted code sequence having the first length, to produce a code sequence having a second length; and

transmitting the code sequence having the second length,

wherein the first length is a largest prime number smaller than the second length,

wherein performing the circular shift comprises either moving a rear portion of the code sequence having the first length to a start of the code sequence having the first length, or moving a front portion of the code sequence having the first length to an end of the code sequence having the first length, and

wherein performing the cyclic extension comprises adding a portion of the circularly-shifted code sequence having the first length, having a length corresponding to a difference between the first length and the second length, to either a start or an end of the circularly-shifted code sequence having the first length.

* * * * *

EXHIBIT 2

US007768965B2

(12) **United States Patent**
Kwon et al.

(10) **Patent No.: US 7,768,965 B2**
(45) **Date of Patent: Aug. 3, 2010**

(54) **METHOD FOR TRANSMITTING AND RECEIVING SIGNALS BASED ON SEGMENTED ACCESS SCHEME AND METHOD FOR ALLOCATING SEQUENCE FOR THE SAME**

(75) Inventors: **Yeong Hyeon Kwon**, Anyang-Si (KR); **Seung Hee Han**, Anyang-Si (KR); **Hyun Hwa Park**, Anyang-Si (KR); **Dong Cheol Kim**, Anyang-Si (KR); **Hyun Woo Lee**, Anyang-Si (KR); **Min Seok Noh**, Anyang-si (KR); **Dragan Vujcic**, Limours (FR)

(73) Assignee: **LG Electronics Inc.**, Seoul (KR)

(*) Notice: Subject to any disclaimer, the term of this patent is extended or adjusted under 35 U.S.C. 154(b) by 8 days.

(21) Appl. No.: **12/440,869**

(22) PCT Filed: **Sep. 10, 2007**

(86) PCT No.: **PCT/KR2007/004359**

§ 371 (c)(1),
(2), (4) Date: **Mar. 11, 2009**

(87) PCT Pub. No.: **WO2008/032959**

PCT Pub. Date: **Mar. 20, 2008**

(65) **Prior Publication Data**

US 2009/0225701 A1 Sep. 10, 2009

Related U.S. Application Data

(60) Provisional application No. 60/863,329, filed on Oct. 27, 2006.

(30) **Foreign Application Priority Data**

Sep. 11, 2006 (KR) 10-2006-0087290
Sep. 27, 2006 (KR) 10-2006-0094103

(51) **Int. Cl.**
H04W 4/00 (2009.01)

(52) **U.S. Cl.** **370/328**; 370/330

(58) **Field of Classification Search** 370/328–339
See application file for complete search history.

(56) **References Cited**

U.S. PATENT DOCUMENTS

2002/0160781 A1 10/2002 Bark et al.
2004/0157602 A1 8/2004 Khawand
2004/0214590 A1 10/2004 Al-Housami et al.

(Continued)

FOREIGN PATENT DOCUMENTS

KR 10-2001-0082697 A 8/2001
KR 10-2005-0053714 A 6/2005

OTHER PUBLICATIONS

Rach Sequence Extension Methods for Large Cell Deployment, 3GPP TSG RAN1 LTE WG1 Meeting #46, R1-062306, Tallinn, Estonia, 7 pages, Aug. 28-Sep. 1, 2006.*
"Rach Design for Large Cell Deployment", 3GPP TSG WG1 Meeting #46, R1-062307, Tallinn, Estonia, Aug. 1-Sep. 1, 2006.

Primary Examiner—Frank Duong
(74) *Attorney, Agent, or Firm*—Birch, Stewart, Kolasch & Birch, LLP

(57) **ABSTRACT**

A segmented access based signal transmitting/receiving method and a sequence allocating method for the same are disclosed. According to one embodiment of the present invention, a method of transmitting a signal of a user equipment in a communication system includes selecting a channel in accordance with at least one selected from the group consisting of a signal attenuation extent of a downlink signal to the αser equipment and a speed of the user equipment from channels differently provided based on at least one selected from the group consisting of the signal attenuation extent of the downlink signal and the speed of the user equipment and transmitting the signal using the selected channel.

11 Claims, 17 Drawing Sheets

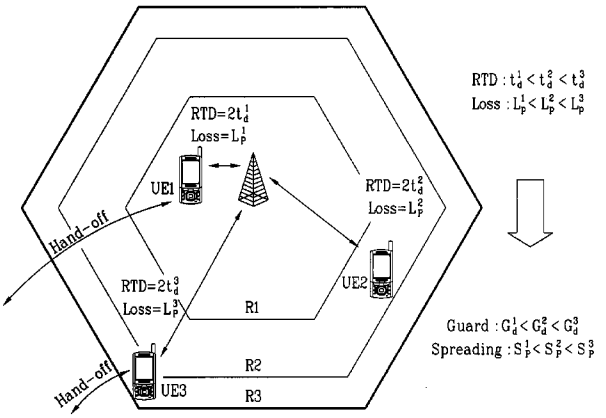

U.S. PATENT DOCUMENTS

2007/0165567 A1* 7/2007 Tan et al. 370/329
2008/0101306 A1* 5/2008 Bertrand et al. 370/336
2008/0130588 A1* 6/2008 Jeong et al. 370/335
2008/0192678 A1* 8/2008 Bertrand et al. 370/328

* cited by examiner

FIG. 1

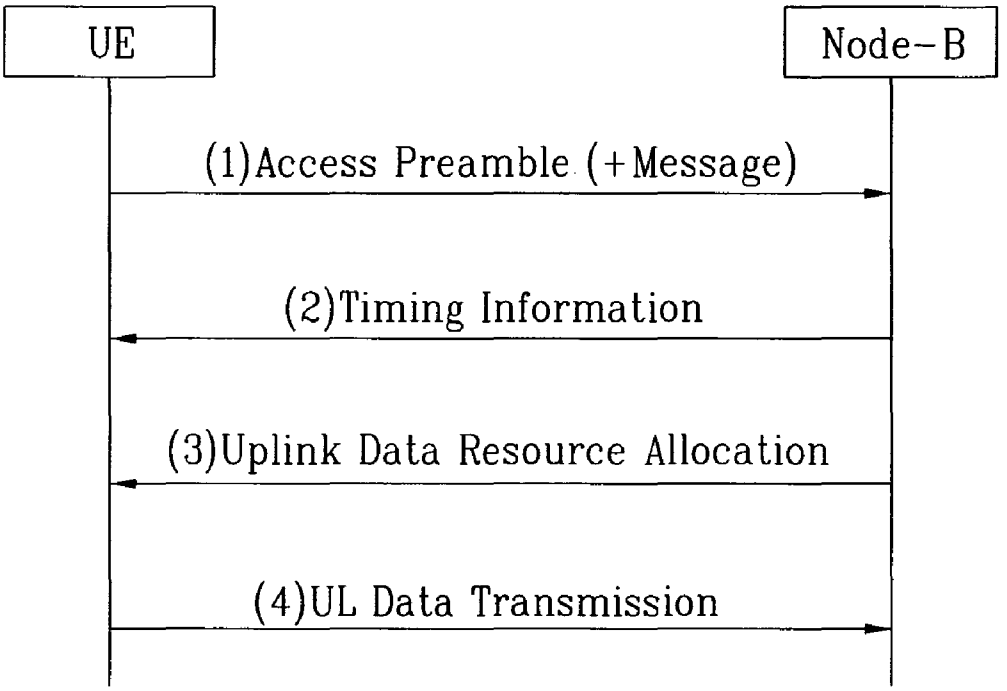
UE
Node-B
(1)Access Preamble (+Message)
(2)Timing Information
(3)Uplink Data Resource Allocation
(4)UL Data Transmission

FIG. 2

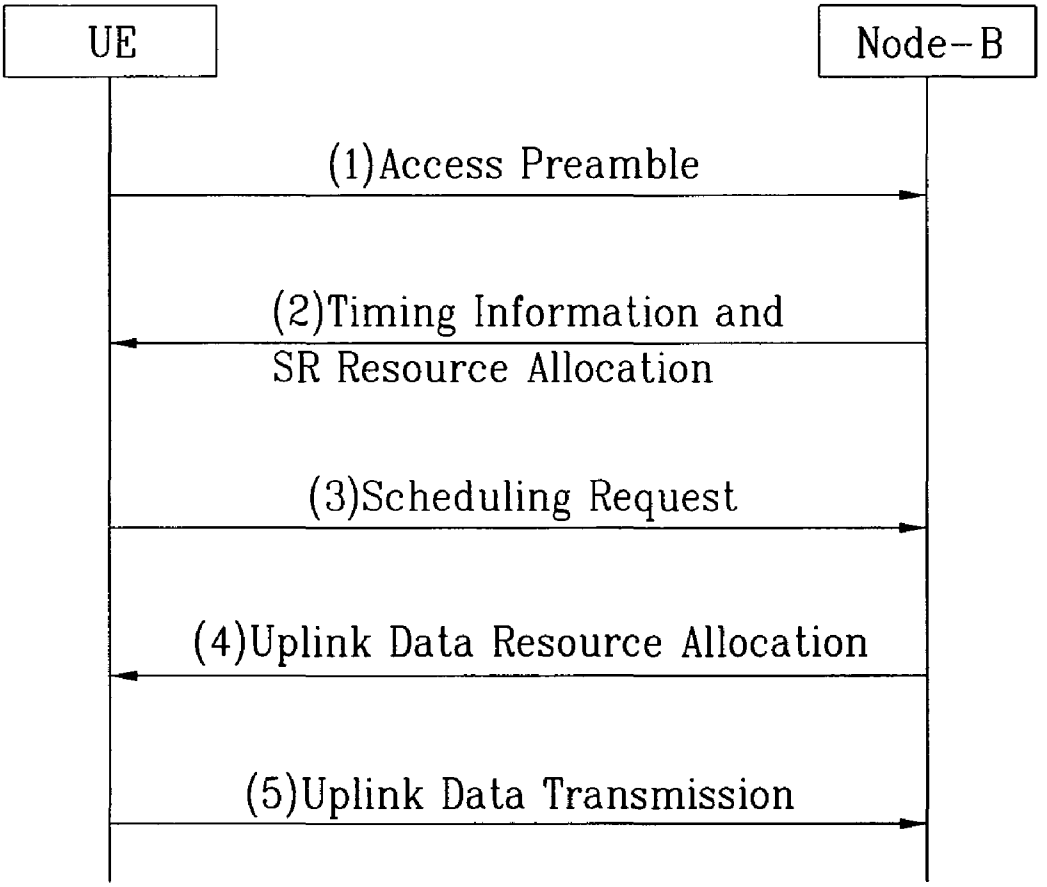
UE
Node-B
(1)Access Preamble
(2)Timing Information and
SR Resource Allocation
(3)Scheduling Request
(4)Uplink Data Resource Allocation
(5)Uplink Data Transmission

FIG. 3

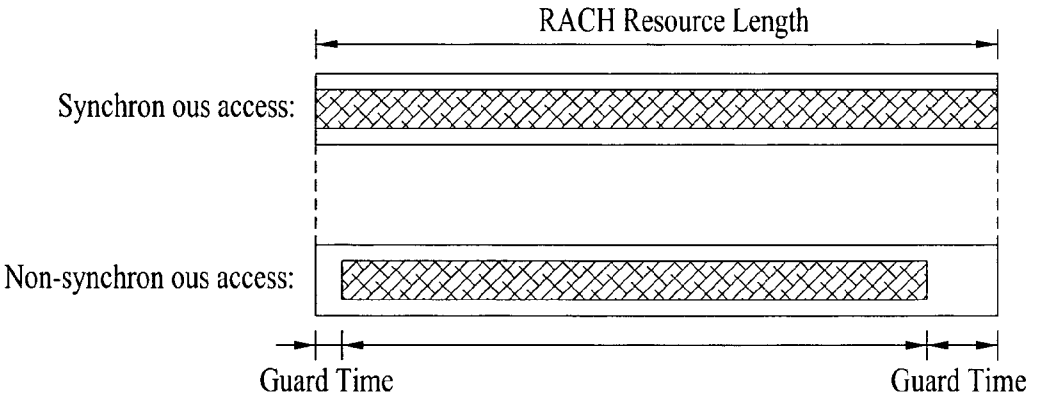
RACH Resource Length
Synchron ous access:
Non-synchron ous access:
Guard Time
Guard Time

FIG. 4

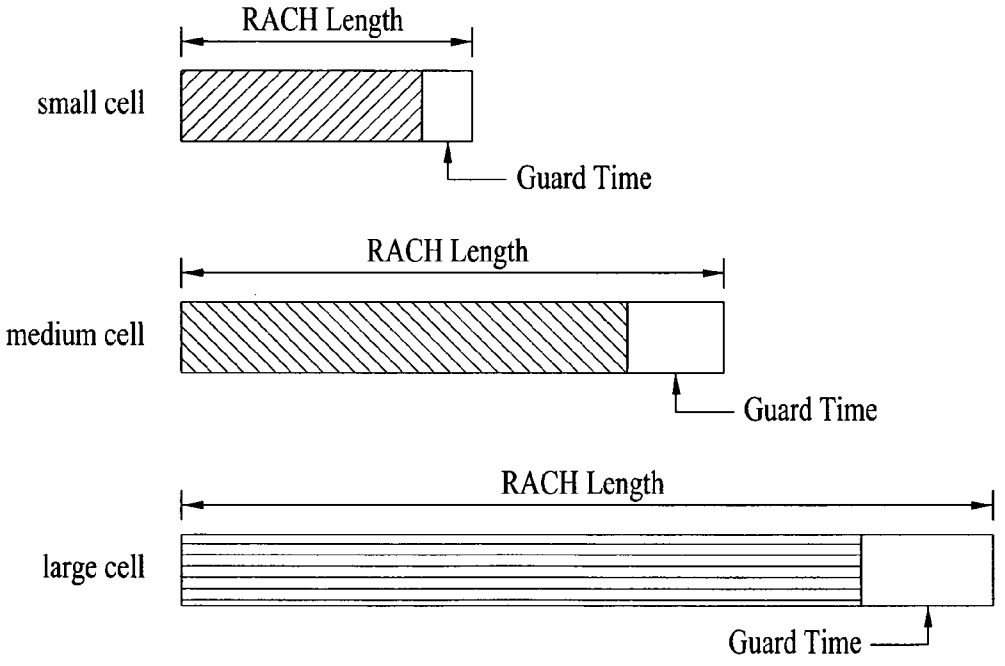
RACH Length
small cell
Guard Time
RACH Length
medium cell
Guard Time
RACH Length
large cell
Guard Time

FIG. 5

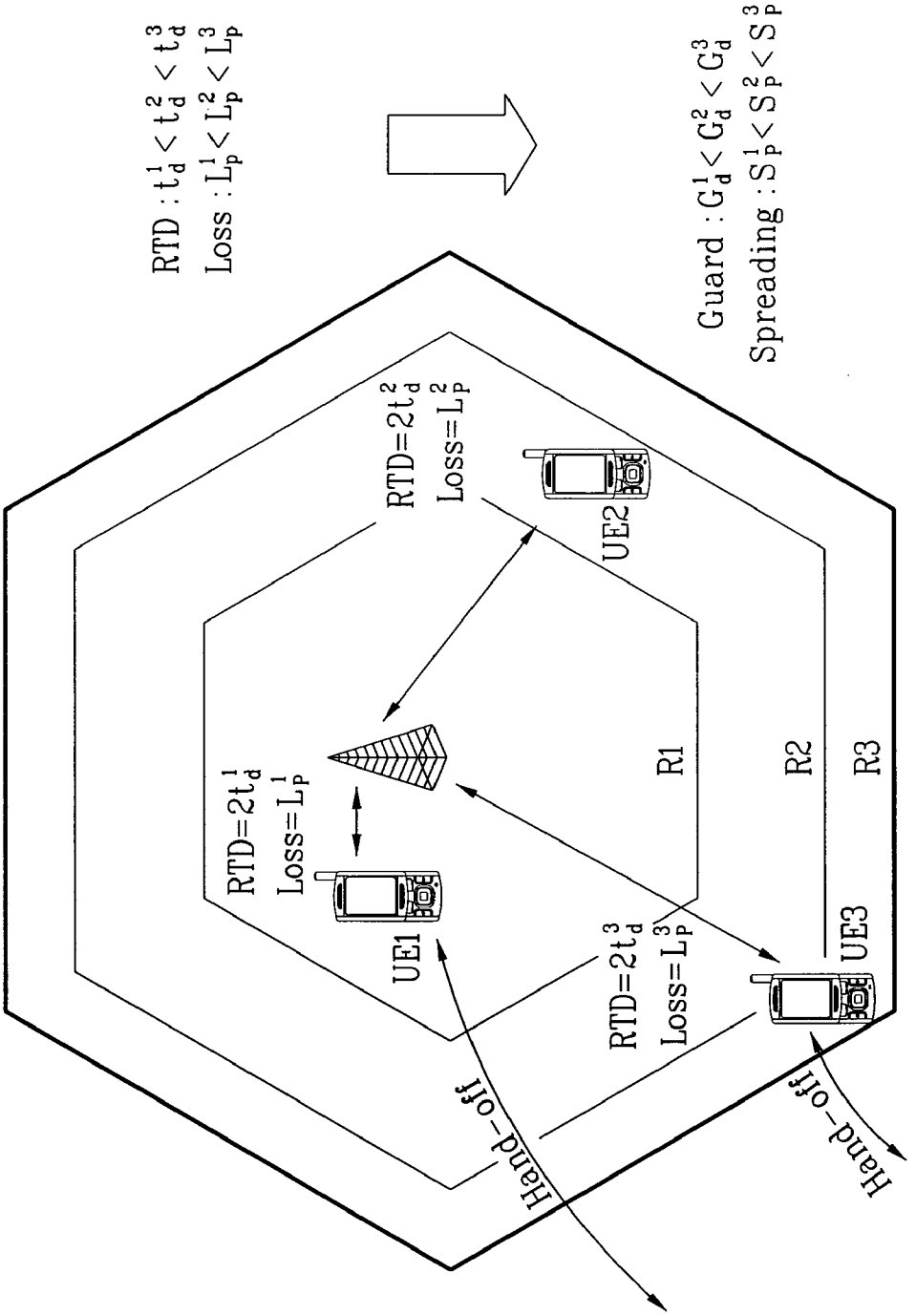
RTD : $t_d^1 < t_d^2 < t_d^3$
Loss : $L_p^1 < L_p^2 < L_p^3$
Guard : $G_d^1 < G_d^2 < G_d^3$
Spreading : $S_P^1 < S_P^2 < S_P^3$
RTD=$2t_d^2$
Loss=L_P^2
UE2
RTD=$2t_d^1$
Loss=L_P^1
UE1
R1
R2
R3
RTD=$2t_d^3$
Loss=L_P^3
UE3
Hand-off
Hand-off

FIG. 6

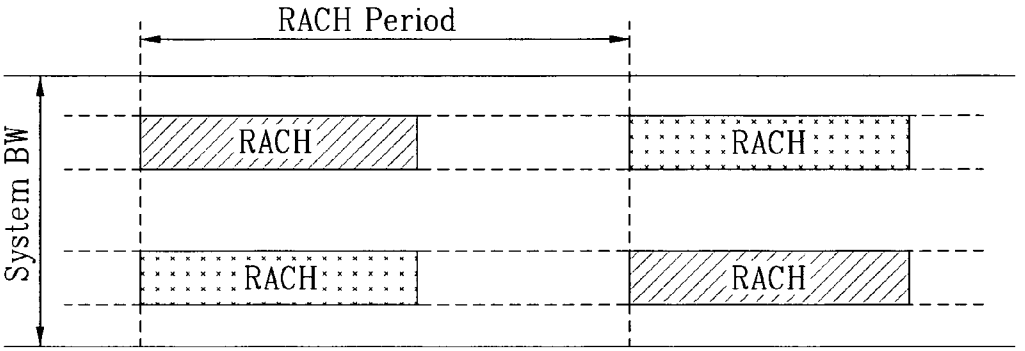

Multiple RACH slots per RACH period

FIG. 7

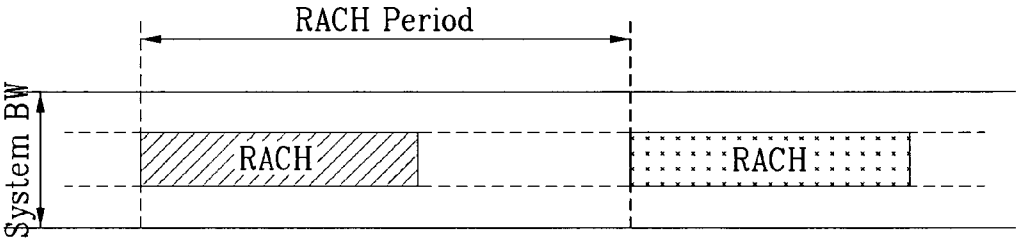

FIG. 8

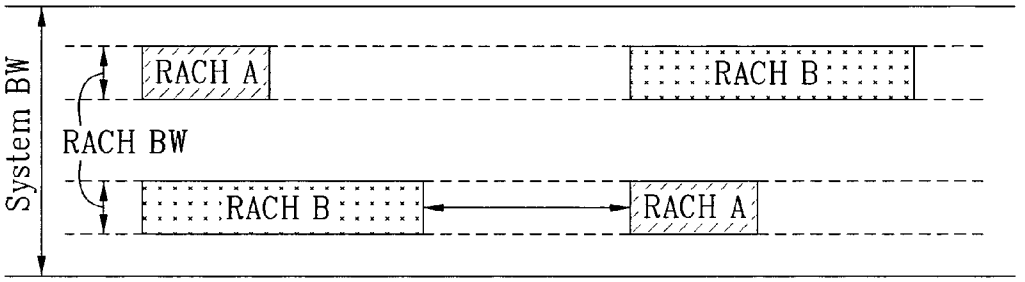
System BW
RACH A
RACH B
RACH BW
RACH B
RACH A

FIG. 9

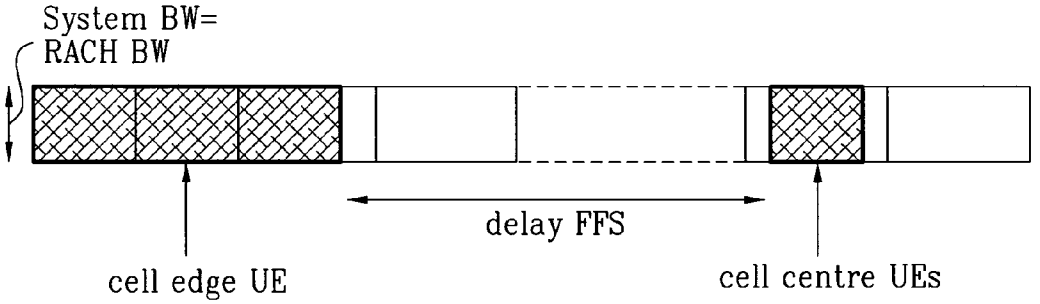
System BW=
RACH BW
delay FFS
cell edge UE
cell centre UEs

FIG. 10

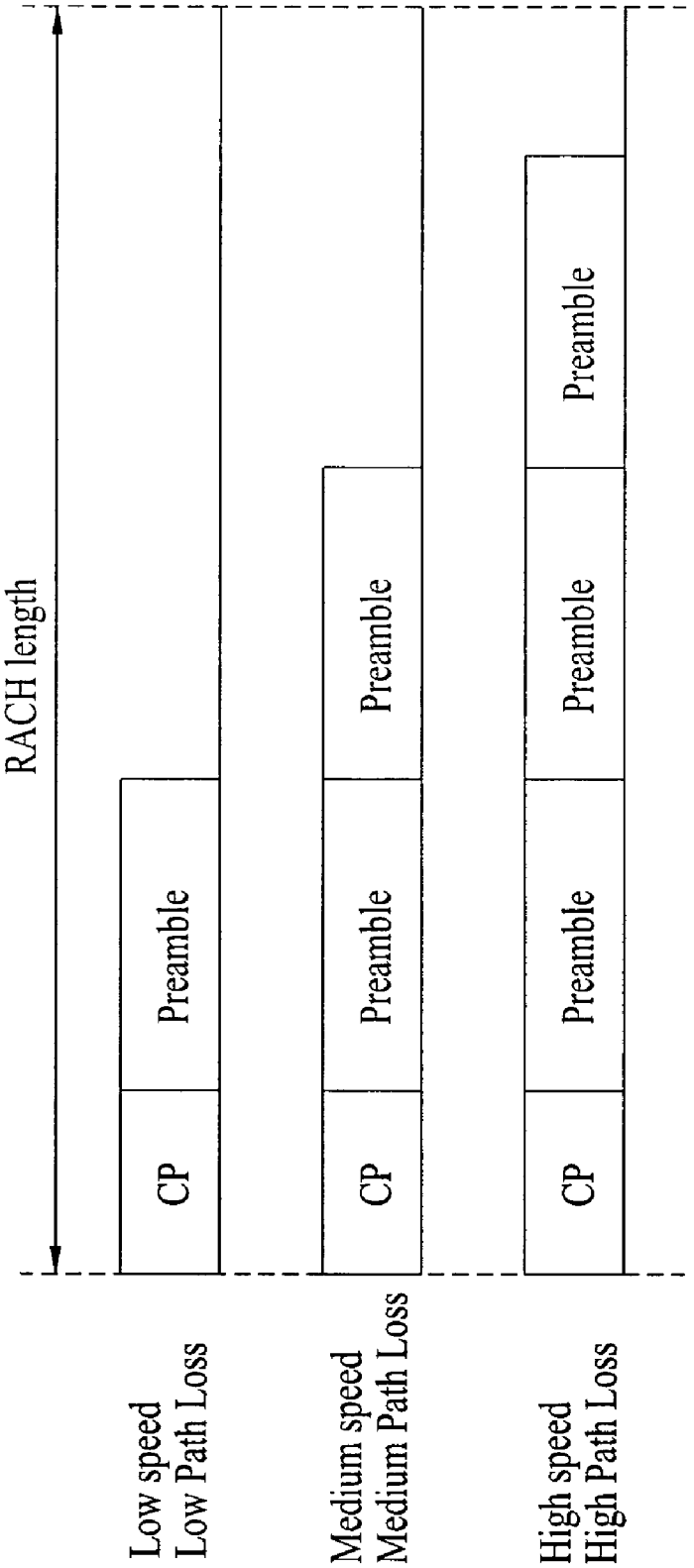
RACH length
CP
Preamble
CP
Preamble
Preamble
CP
Preamble
Preamble
Preamble
Low speed
Low Path Loss
Medium speed
Medium Path Loss
High speed
High Path Loss

FIG. 11

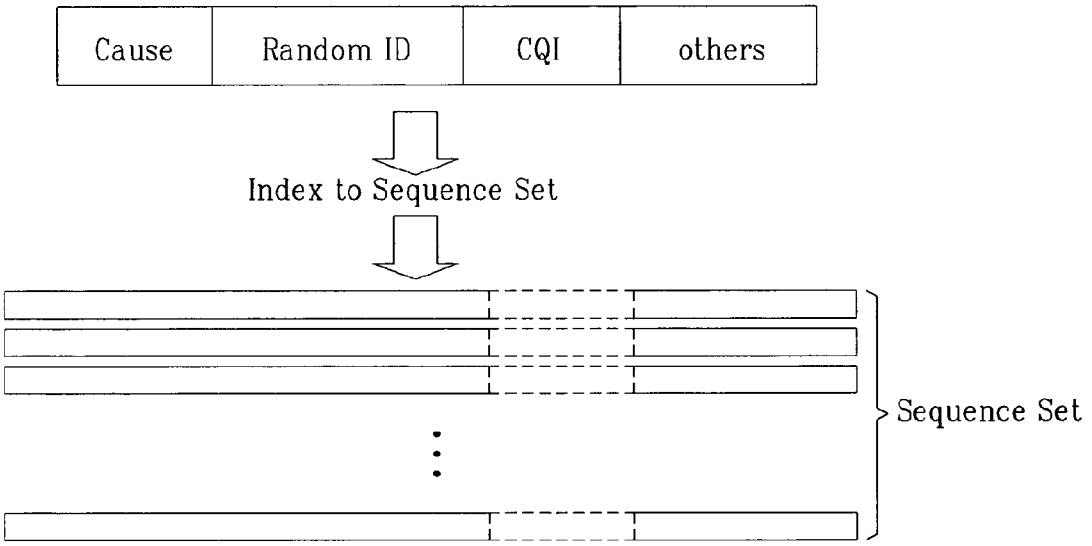
Cause
Random ID
CQI
others
Index to Sequence Set
Sequence Set

FIG. 12

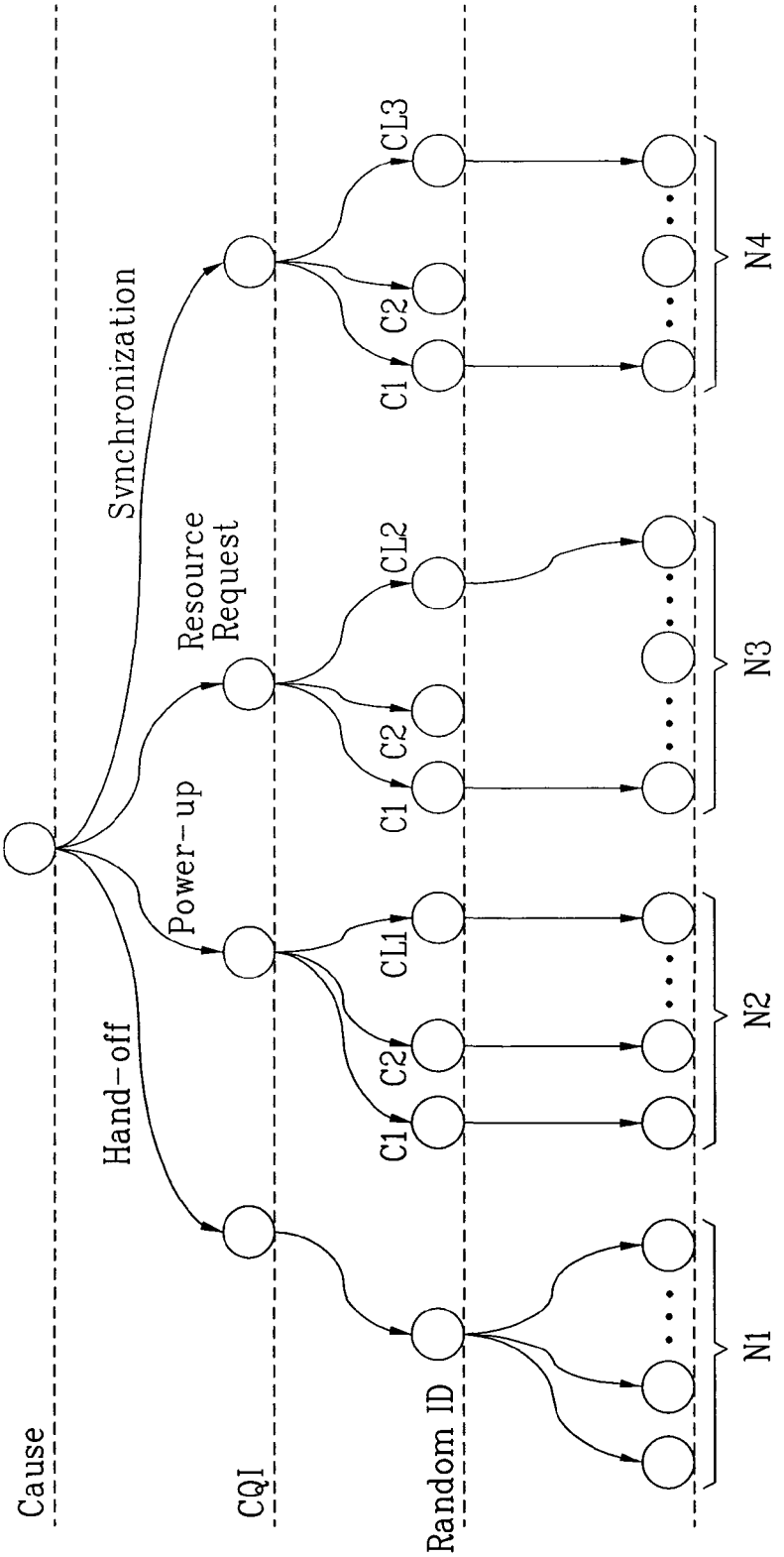
Cause
CQI
Random ID
Hand-off
Power-up
Resource Request
Synchronization
C1
C2
CL1
CL2
CL3
N1
N2
N3
N4

FIG. 13

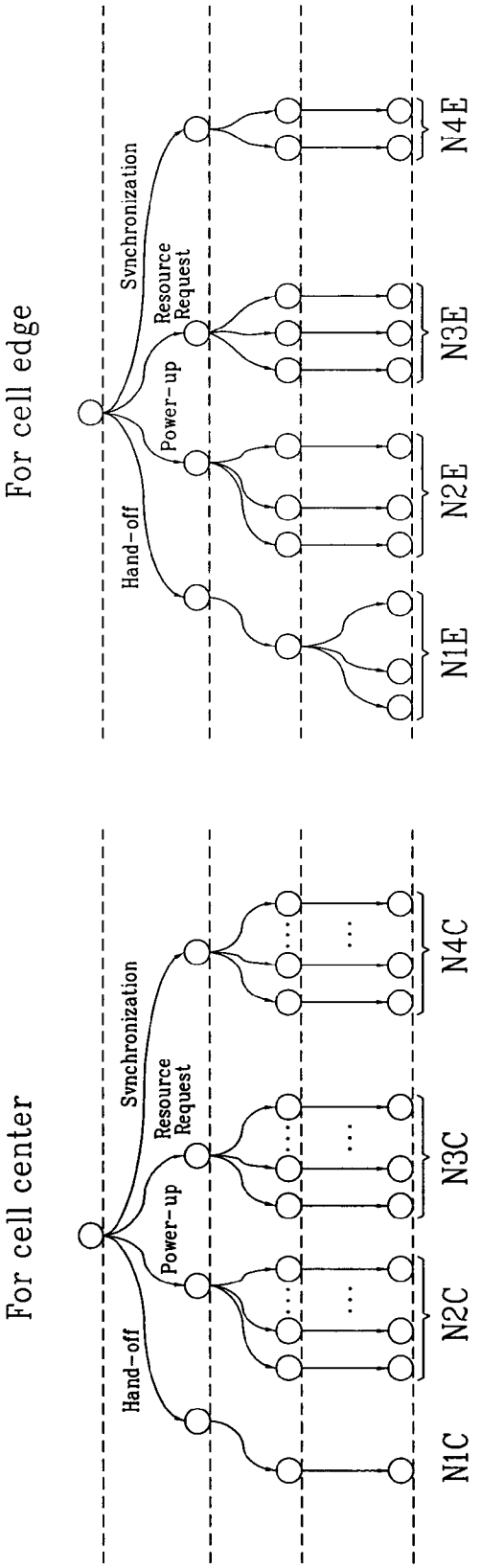
For cell center
Hand-off
Power-up
Resource Request
Synchronization
N1C
N2C
N3C
N4C
For cell edge
Hand-off
Power-up
Resource Request
Synchronization
N1E
N2E
N3E
N4E

FIG. 14

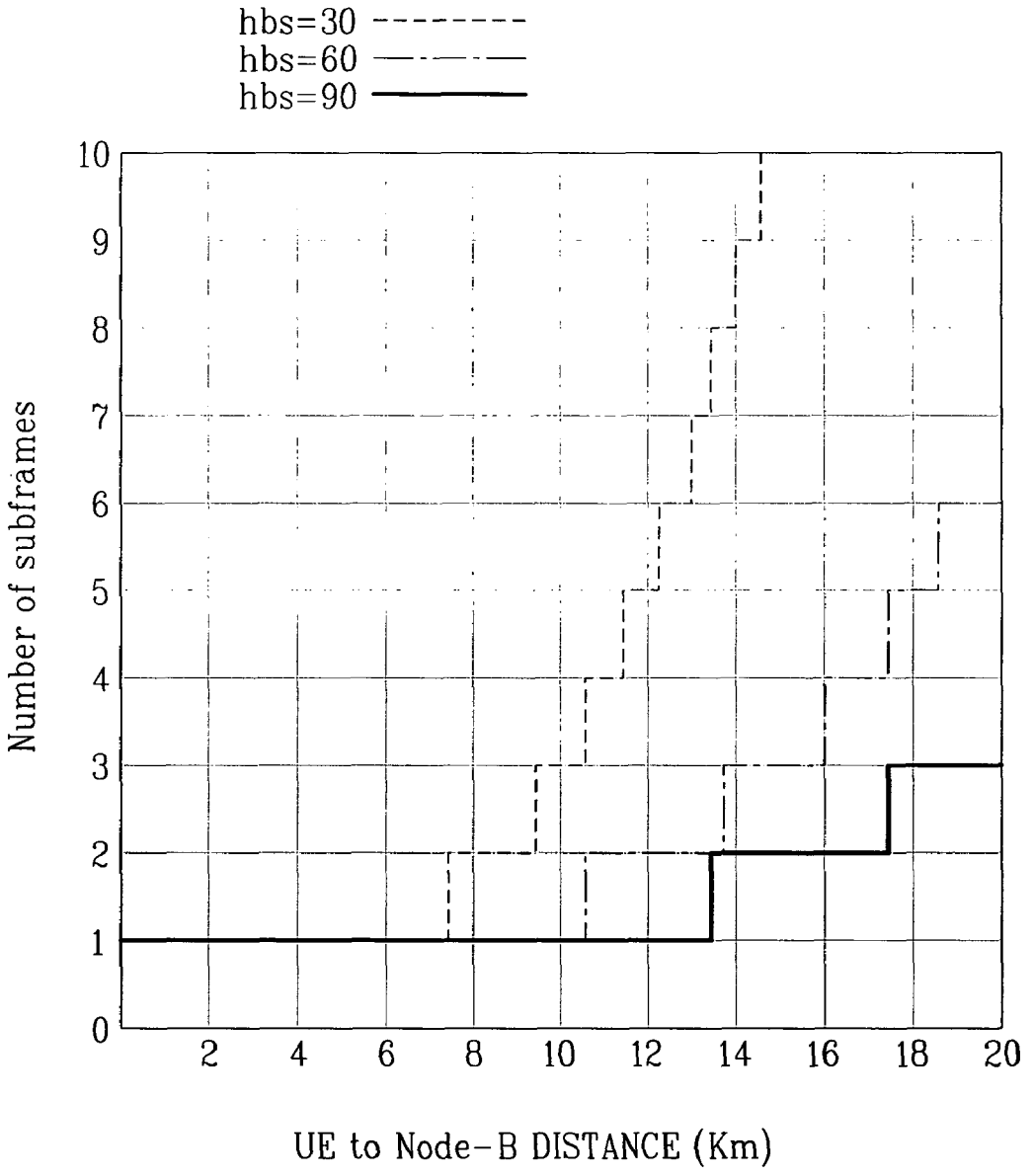
hbs=30
hbs=60
hbs=90
Number of subframes
0
1
2
3
4
5
6
7
8
9
10
2
4
6
8
10
12
14
16
18
20
UE to Node-B DISTANCE (Km)

FIG. 15

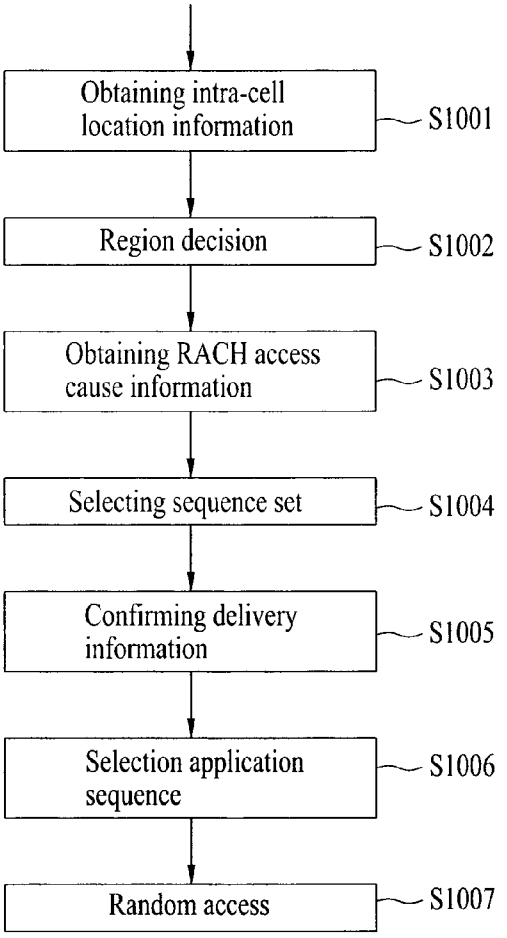
Obtaining intra-cell location information
S1001
Region decision
S1002
Obtaining RACH access cause information
S1003
Selecting sequence set
S1004
Confirming delivery information
S1005
Selection application sequence
S1006
Random access
S1007

FIG. 16

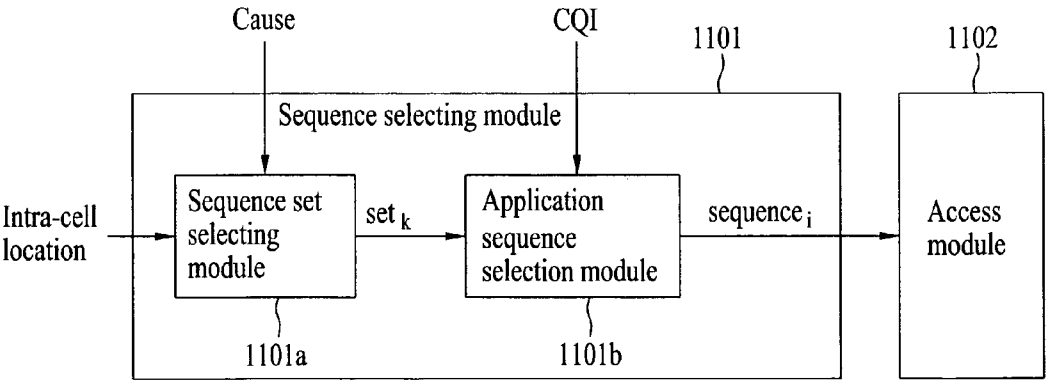
Cause
CQI
1101
1102
Sequence selecting module
Intra-cell location
Sequence set selecting module
set k
Application sequence selection module
sequence i
Access module
1101a
1101b

FIG. 17

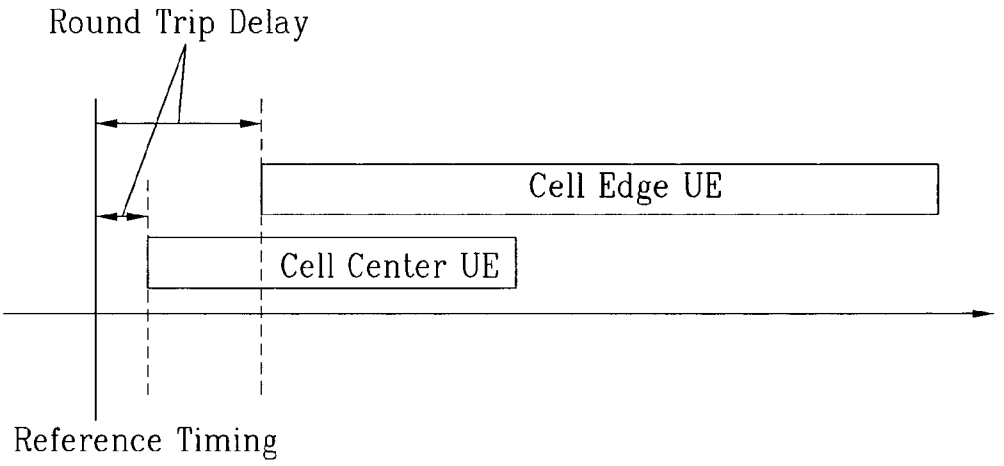
Round Trip Delay
Cell Edge UE
Cell Center UE
Reference Timing

FIG. 18

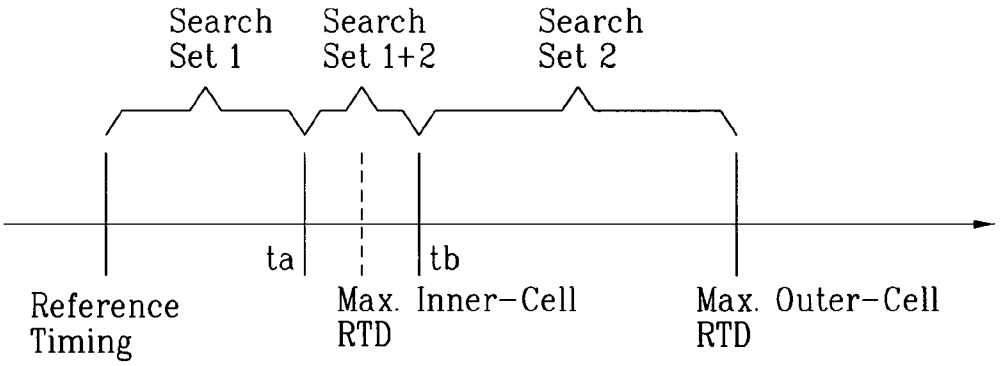
Search Set 1
Search Set 1+2
Search Set 2
ta
tb
Reference Timing
Max. RTD
Inner-Cell
Max. RTD
Outer-Cell

FIG. 19

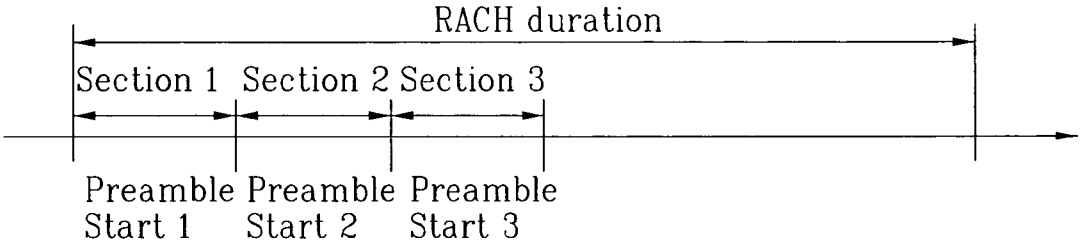
RACH duration
Section 1
Section 2
Section 3
Preamble Start 1
Preamble Start 2
Preamble Start 3

FIG. 20

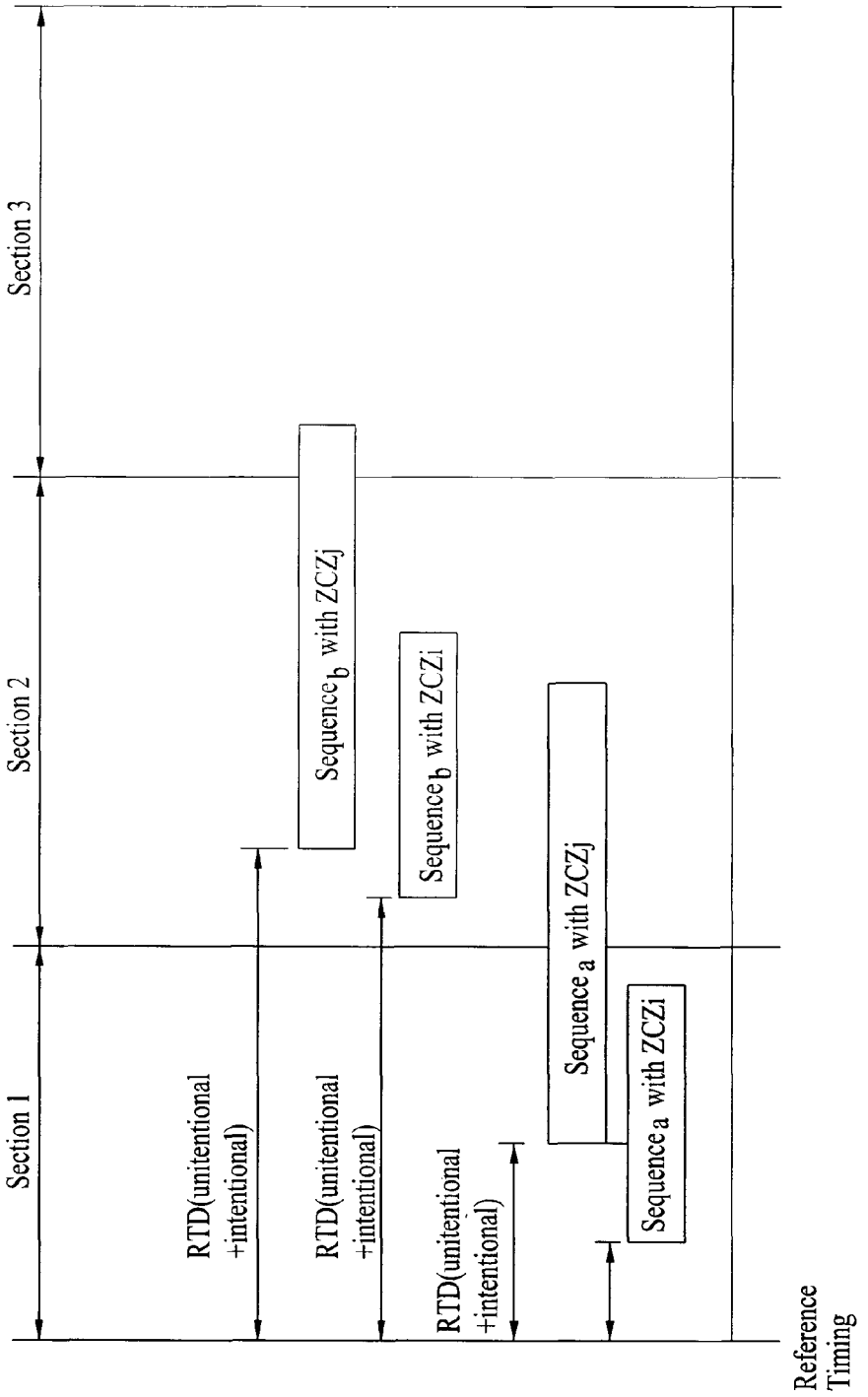
Section 1
Section 2
Section 3
RTD(unitentional +intentional)
RTD(unitentional +intentional)
RTD(unitentional +intentional)
Sequence$_b$ with ZCZj
Sequence$_b$ with ZCZi
Sequence$_a$ with ZCZj
Sequence$_a$ with ZCZi
Reference Timing

FIG. 21

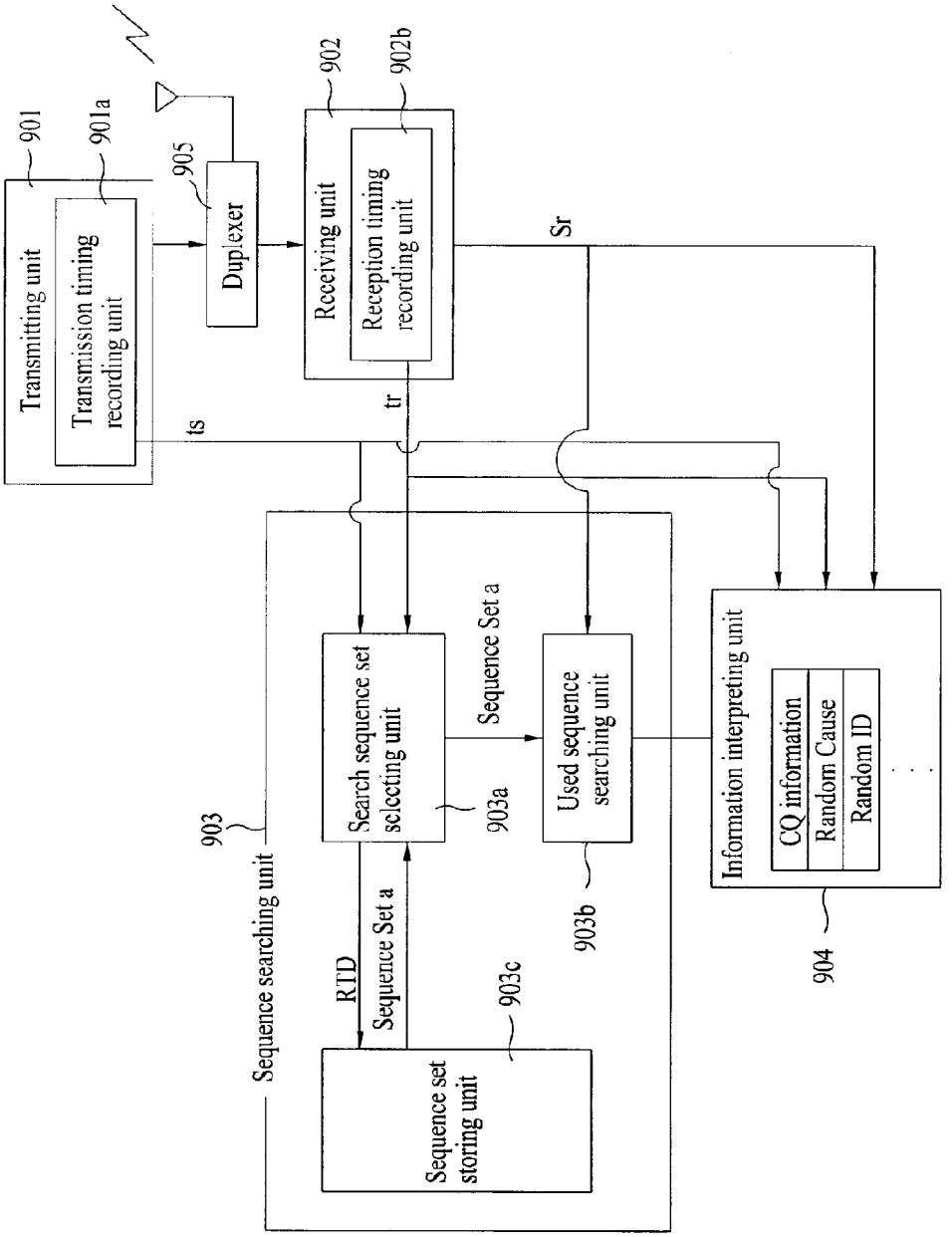
901
901a
Transmitting unit
Transmission timing recording unit
905
Duplexer
902
902b
Receiving unit
Reception timing recording unit
Sr
ts
tr
903
Sequence searching unit
Search sequence set selecting unit
903a
Sequence Set a
Used sequence searching unit
903b
RTD
Sequence Set a
903c
Sequence set storing unit
Information interpreting unit
CQ information
Random Cause
Random ID
904

FIG. 22

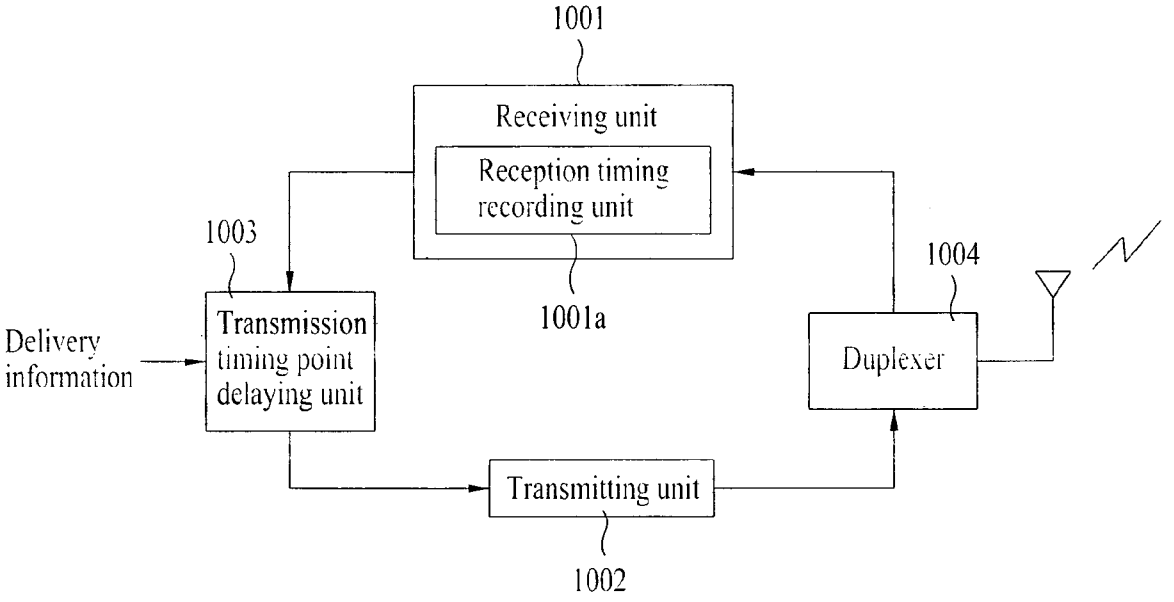
1001
Receiving unit
Reception timing recording unit
1001a
1003
Delivery information
Transmission timing point delaying unit
1004
Duplexer
Transmitting unit
1002

METHOD FOR TRANSMITTING AND RECEIVING SIGNALS BASED ON SEGMENTED ACCESS SCHEME AND METHOD FOR ALLOCATING SEQUENCE FOR THE SAME

This application is the National Phase of PCT/KR2007/0004359 filed on Sep. 10, 2007, which claims priority under 35 U.S.C. 119(e) to U.S. Provisional Application No. 60/863,329 filed on Oct. 27, 2006, and under 35 U.S.C. 119(a) to Patent Application Nos. 10-2006-0087290 and 10-2006-0094103 filed in the Republic of Korea on Sep. 11, 2006, and Sep. 27, 2006 respectively, all of which are hereby expressly incorporated by reference into the present application.

TECHNICAL FIELD

The present invention relates to a wireless communication technology, and more particularly, to a method of allocating a sequence set for a random access channel based on a segmented access scheme in a communication system, an apparatus and method for transmitting and receiving signals using the sequence set, and an apparatus and method for searching a delay based sequence.

BACKGROUND ART

Generally, uplink channels for a currently discussed communication system include a random access channel (RACH or a ranging channel) for a user equipment to randomly access a base station, an uplink shared channel (e.g., HS-DPCCH) for carrying a channel quality indicator (CQI) and ACK/NACK information, and the like.

The RACH or ranging channel is a random access channel for a user equipment to perform downlink synchronization with a base station and can be found through bases station information. A location of a corresponding channel and the like can be acquired from the base station information. And, the RACH or ranging channel is a unique channel that can be accessed by a user terminal which is not synchronized with a base station yet.

If a user equipment transmits a signal to a corresponding base station on the RACH or ranging channel, the base station informs the user equipment of modification information on an uplink signal timing for synchronization with the base station and various information for the corresponding user equipment to be connected to the base station.

After a connection between the user equipment and the base station has been completed through the RACH or the ranging channel, communications can be carried out using other channels.

FIG. **1** and FIG. **2** are diagrams for examples of a process generated when a user equipment connects an uplink communication with a base station.

First of all, a user equipment can acquire both uplink and downlink synchronizations with a base station by accessing an RACH or a ranging channel. So, the user equipment is in a state capable of accessing the corresponding base station. FIG. **1** shows a situation that a user equipment is initially connected to a base station after a power of the user equipment has been turned on. FIG. **2** shows that a user equipment having performed initial synchronization with a base station accesses the base station if the synchronization is mismatched or if a request for an uplink resource needs to be made (i.e., if a resource for uplink transmission data is requested).

In a step (**1**) of FIG. **1** or FIG. **2**, a user equipment transmits an access preamble and a message to a base station if necessary. The base station recognizes why the corresponding user equipment accesses an RACH or a ranging channel and then makes an action for a corresponding process.

In case of the initial access shown in FIG. **1** or FIG. **2**, the base station allocates timing information and an uplink data resource to the corresponding user equipment in steps (**2**) and (**3**). So, the user equipment is able to transmit uplink data in a step (**4**).

FIG. **2** shows an example of a case that the user equipment accesses the RACH or the ranging channel in the step (**1**) because of a scheduling request (hereinafter abbreviated SR). In the step (**2**), the base station performs resource allocation for the timing information and the SR to the user equipment. For the SR (step (**3**) of the user equipment, the base station performs uplink data resource allocation [step (**4**)] to enable the user equipment to perform uplink data transmission [step (**5**)]. In case that the SR is transmitted on a random access channel, it means a case that the user equipment having been in an idle/sleep mode for a long time is decided to have a timing mismatched with that of the base station. So, this scheme enables both of the timing information and the resource allocation request to be handled at a time.

In accessing the RACH or the ranging channel, in case of the case shown in FIG. **2** instead of the initial access, a different signal is usable according to whether a signal carried on the RACH or the ranging channel is matched in synchronization with the base station.

FIG. **3** is a diagram for a structure of an RACH or a ranging channel used for a synchronous/asynchronous access.

In case of a synchronized access, a user equipment having performed synchronization with a base station makes an access to a RACH or a ranging channel in a situation that the synchronization is maintained (synchronization can be maintained through control information such as a downlink signal or a CQ pilot transmitted in uplink). And, the base station is facilitated to recognize a signal carried on the RACH or the ranging channel.

Since the synchronization is being maintained, the user equipment, as shown in an upper part of FIG. **3**, is able to use a longer sequence or further transmit additional data.

In case of a non-synchronized access, when a user equipment makes an access to a base station, if synchronization is mismatched due to some cause, a guard time, as shown in a lower part of FIG. **3**, should be set in accessing an RACH or a ranging channel. The guard time is set by considering a maximum roundtrip delay that a user equipment attempting to receive a service within the base station can have.

The RACH or the ranging channel should vary in length according to a cell size of the base station. As the user equipment gets farther from the base station, a round-trip delay gets increased. And, this means that the guard time set for the user equipment in the non-synchronized access gets longer. If the cell size is increased, a path loss between the user equipment and the base station is increased. So, a signal needs to be transmitted by being spread longer, which is shown in FIG. **4**.

FIG. **4** is a diagram to explain a cell size and a channel length.

Referring to FIG. **4**, a length of a channel, and more particularly, a length of an RACH or a ranging channel is set proportional to a cell size at a place where a communication will be actually installed. FIG. **4** shows three kinds of RACHs according to a rule of categorizing cell sizes into a small cell size, a medium cell size, and a large cell size. And, a different sequence is applied to each of the RACHs respectively having three kinds of lengths, which is indicated by a different shaded portion. In particular, how an inside of a cell is segmented can be diversified according to a condition of a cor-

responding system. And, a scheme for extending the length of the RACH or the ranging channel and a sequence applied thereto can be diverse as well.

Meanwhile, a user equipment transmits a signal via an RACH or a ranging channel. This is because the user equipment can obtain a specific service in a manner of transmitting a selected sequence to a base station to match a synchronization of an uplink signal to the corresponding base station. To achieve this object, entire user equipments within an area defined as a cell should have success probability over a predetermined level regardless of a location of the corresponding user equipment. For this, in case that a cell size is small, a variation of an RACH or ranging channel resource is not considerable. So, a quantity occupied by an RACH or a ranging channel in an overall system is very small. For instance, in case that 1 subframe is used as an RACH or a ranging channel in 3GPP LTE system, the system uses 1/20 of overhead as the RACH or the ranging channel. Yet, if 5 subframes need to be used due to an increased cell size, the overhead increases 5 times to considerably affect overall system performance.

As a scheme for reducing the overhead in a large cell, a method of changing a cycle of an RACH or a ranging channel can be taken into consideration. Yet, this method raises a problem that an access latency is elongated when a user equipment access the RACH or the ranging channel. And, it is also disadvantageous that probability of collision occurrence in an RACH or ranging channel slot is raised.

In case that entire user equipments within a large cell use an identically specified sequence, probability of collision in an RACH or ranging channel slot can be raised in proportion to an increasing number of user equipments within the corresponding cell.

Accordingly, the demand for a technology in reducing probability of collision occurrence in the same RACH or ranging channel slot and overhead attributed to an RACH or a ranging channel in a large cell has risen.

However, a detailed scheme for solving the problem has not been proposed.

DISCLOSURE OF THE INVENTION

Technical Object

Although a resource quantity of an RACH or a ranging channel increases according to a cell radius, this is just advantageous to UEs remote from a base station but may be unnecessary for UEs close to the base station.

As mentioned in the foregoing description, a path loss may appear differently for each UE due to a location within a cell and the like or a different requirement may rise for a frequency offset and the like according to a per UE speed.

Hence, by considering conditions for an RACH or a ranging channel for each UE to use an RACH or a ranging channel more effectively in case of a large cell radius, an RACH or ranging channel structure, interpretation of the RACH or the ranging channel, and a sequence applied as the corresponding RACH or ranging channel are designed. For this, the present invention proposes a segmented access scheme.

Accordingly, the present invention is directed to a method of allocating a sequence set for a random access channel based on a segmented access scheme in a communication system, an apparatus and method for transmitting and receiving signals using the sequence set, and an apparatus and method for searching a delay based sequence that substantially obviate one or more of the problems due to limitations and disadvantages of the related art.

An object of the present invention is to reduce probability of collision possible in using an identical sequence by entire user equipments within a cell in a manner of providing a sequence set differently allocated according to a location of a user equipment within a cell.

Another object of the present invention is to provide a method and apparatus for enabling a user equipment to transmit and receive signals using a sequence set.

Another object of the present invention is to provide a method and apparatus for reducing a load imposed on a base station in sequence search and a signal transmitting/receiving method using the same, in which a base station searches for a sequence used for an RACH or a ranging channel in a manner of selecting a sequence set to be searched by considering delay time of a reception signal, search complexity and the like and then deciding/searching which sequence is used as a sequence used for the received RACH or the ranging channel using the selected sequence.

Another object of the present invention is to provide a method and apparatus for reducing sequence dependency of information transfer in an RACH or a ranging channel, in which a UE inserts intentional delay information in a transmission signal as a means for indicating information to be delivered to a base station and in which the base station having received the signal obtains the corresponding information through a delayed extent of a reception signal.

Additional features and advantages of the invention will be set forth in the description which follows, and in part will be apparent from the description, or may be learned by practice of the invention. The objectives and other advantages of the invention will be realized and attained by the structure particularly pointed out in the written description and claims thereof as well as the appended drawings.

Technical Solution

To achieve these and other advantages and in accordance with the purpose of the present invention, as embodied and broadly described, a signal transmitting method of a user equipment in a communication system according to one embodiment of the present invention is provided. For this, according to one embodiment of the present invention, a method of transmitting a signal of a user equipment in a communication system includes the steps of selecting a channel in accordance with at least one selected from the group consisting of a signal attenuation extent of a downlink signal to the user equipment, a speed of the user equipment and an intra-cell location of a user from channels differently provided based on at least one selected from the group consisting of the signal attenuation extent of the downlink signal and the speed of the user equipment; and transmitting the signal using the selected channel.

To further achieve these and other advantages and in accordance with the purpose of the present invention, according to another embodiment of the present invention, in a method that a specific user equipment transmits a signal via a random access channel, a signal transmitting method includes the steps of selecting at least one or more sequence sets according to an intra-cell location of the specific user equipment from total sequence sets allocated by being differently discriminated from each other according to the intra-cell location of each user equipment, selecting a prescribed sequence from the selected sequence set in accordance with transmission information of the specific user equipment, and then transmitting the selected sequence via the random access channel in accordance with a location of the user equipment (e.g., a

transmission start time is chanted, a modulation scheme of the sequence itself is changed, or modulation applied to the sequence is changed, etc.).

To further achieve these and other advantages and in accordance with the purpose of the present invention, according to a further embodiment of the present invention, in a method of receiving a signal from at least one user equipment via a random access channel, a signal receiving method includes the steps of receiving a signal via the random access channel from the at least one user equipment and obtaining reception timing point information of the received signal and searching for a sequence used for the received signal using a search target sequence set differing in accordance with the reception timing point information by considering a delay time differing in accordance with an intra-cell location of the at least one user equipment.

To further achieve these and other advantages and in accordance with the purpose of the present invention, a sequence allocating method, a signal transmitting apparatus, and a signal receiving apparatus for the above embodiments of the present invention are provided.

It is to be understood that both the foregoing general description and the following detailed description are exemplary and explanatory and are intended to provide further explanation of the invention as claimed.

Advantageous Effects

According to one embodiment of the present invention, a separate RACH or ranging channel is generated in accordance with a different condition for an RACH or a ranging channel per a user equipment and then used. Hence, overhead for the RACH or the ranging channel can be reduced.

According to one embodiment of the present invention, a sequence set for allocating a different number of sequences in accordance with a location of a user equipment within a cell is provided. Hence probability in collision, which may be generated in case that all user equipments within the cell use the same sequence, can be lowered.

In case that a user equipment additionally considers a cause why a user equipment attempts to access an RACH or a ranging channel, collision probability in the corresponding RACH or ranging channel can be more efficiently lowered. In particular, more efficient sequence allocation can be achieved in a manner of providing a sequence capable of obtaining a number of sequences proportional to a frequency of accessing an RACH or a ranging channel due to the corresponding cause within a specific cell region.

According to one embodiment of the present invention, when a base station searches for a sequence used for an RACH or a ranging channel, a sequence set to be searched is selected by considering a delay time of a reception signal and it is then searched which sequence is used for the received RACH or ranging channel using the selected sequence set. Hence, load imposed on the base station in sequence search can be reduced.

A UE inserts intentional delay information in a transmission signal as a means for indicating information to be delivered to a base station. The base station having received the signal obtains the corresponding information through a delayed extent of a reception signal. Hence, sequence dependency of information transfer in an RACH or a ranging channel can be lowered.

DESCRIPTION OF DRAWINGS

The accompanying drawings, which are included to provide a further understanding of the invention and are incorporated in and constitute a part of this specification, illustrate embodiments of the invention and together with the description serve to explain the principles of the invention.

In the drawings:

FIG. **1** and FIG. **2** are diagrams for examples of a process generated when a user equipment connects an uplink communication with a base station;

FIG. **3** is a diagram for a structure of an RACH or a ranging channel used for a synchronous/asynchronous access;

FIG. **4** is a diagram to explain a cell size and a channel length;

FIG. **5** is a diagram to explain a condition differently requested in accordance with a location of a UE within a cell;

FIG. **6** and FIG. **7** are diagrams of schemes for allocating an identical RACH or ranging channel to all UEs;

FIG. **8** and FIG. **9** are diagrams of schemes for allocating an RACH or a ranging channel having a different time domain length in correspondence to a different condition for each UE according to one embodiment of the present invention;

FIG. **10** is a diagram to explain a method of delivering UE information in correspondence to a preamble repetition count of an RACH or a ranging channel according to one embodiment of the present invention;

FIG. **11** is a diagram for a structure of a sequence set for generating information in a bitmap format;

FIG. **12** is a diagram of a example for differentiating a number of CQIs and a number of random IDs due to a cause for a user equipment to access an RACH or a ranging channel according to one embodiment of the present invention;

FIG. **13** is a diagram of a example for differentiating a number of CQIs and a number of random IDs in correspondence to a cause for a user equipment to access an RACH or a ranging channel and a location of the user equipment within a cell according to one embodiment of the present invention;

FIG. **14** is a graph for an increasing transition of an RACH or ranging channel length requested in correspondence to an increasing distance between a user equipment and a base station in proportion to an antenna length of the base station;

FIG. **15** is a flowchart to explain a signal transmitting method according to one embodiment of the present invention;

FIG. **16** is a diagram of a signal transmitting device according to one embodiment of the present invention;

FIG. **17** is a diagram for a round-trip delay time of an RACH or ranging channel signal received by a base station;

FIG. **18** is a diagram to explain a method of changing a sequence set searched in correspondence to a delay time of an RACH or ranging channel signal received by a base station according to one embodiment of the present invention;

FIG. **19** is a diagram to explain a method of inserting intentional delay information in a transmission signal by a UE according to one embodiment of the present invention;

FIG. **20** is a diagram to explain a method of interpreting information based on a delay time, which is attributed to a location of a UE having transmitted an RACH or ranging channel signal received by a base station, and intentional delay time according to one embodiment of the present invention;

FIG. **21** is a block diagram of a sequence searching device for searching a sequence used for a received RACH or ranging channel signal and a signal transmitting device of a base station for interpreting received information as soon as the sequence is searched according to one embodiment of the present invention; and

FIG. **22** is a block diagram of a signal transmitting device of a UE for transmitting a signal in a manner of inserting

intentional delay information in an RACH or ranging channel signal according to one embodiment of the present invention.

BEST MODE

Mode for Invention

Reference will now be made in detail to the preferred embodiments of the present invention, examples of which are illustrated in the accompanying drawings.

The following detailed description disclosed together with the accompanying drawings intends to present not a unique embodiment of the present invention but an exemplary embodiment. The following details include particular details to provide complete understanding of the present invention. Yet, it is apparent to those skilled in the art that the present invention can be implemented without the particular details. For instance, in the following description, 'terminal' is described as a subject to transmit an uplink signal and 'base station' is described as a receiving subject. Theses terminologies do not put limitation of the present invention. So, 'user equipment' can be used as an uplink transmission subject and 'node B' can be used as a receiving subject, for example.

In some case, a structure or device known to public is omitted to avoid conceptional vagueness of the present invention or depicted as a block diagram centering on core functions of the structure or the device. And, the same reference numbers are designated the same elements in this closure overall.

First of all, a basic requisite for an RACH or a ranging channel is to meet requisites for a roundtrip delay and a path loss regardless of a UE speed, a frequency offset, a cell size, and the like. Assumptions for basic RACH or ranging channel allocation (e.g., working assumption of 3GPP LTE) include a preamble length 0.8 ms, a guard time 100 μs, and a 1 ms RACH or ranging channel capable of covering 15 km. Yet, since a cell size exceeds 15 Km, it may happen a case that an RACH or a ranging channel should cover 30 Km section.

Meanwhile, in designing an RACH or a ranging channel to support such a large cell, predetermined limitation is put on a frequency offset in such a manner that a number of ZCZ sequences available for a sequence design is limited. So, a sequence reuse factor can be reduced. And, it can be observed that a repetitive preamble has performance better than that in case of using a short preamble simply.

Thus, in order to design an RACH or ranging channel structure to support a large cell, various factors should be taken into consideration. In this case, the carious factors include: (1) a number of available sequences to prepare for a reduction of ZCZ sequences due to a cell size increase and a reduction of a corresponding overall sequence reuse factor; (2) a preamble repetition number enough to cope with a frequency offset; (3) RACH or ranging channel overhead that may be generated in case of designing an RACH or a ranging channel to support a large cell, e.g., designing an RACH or a ranging channel across a plurality of TTIs, designing an RACH or a ranging channel across a wide bandwidth, etc.; and (4) a number of TTIs for an RACH or a ranging channel, an antenna length in a base station, and the like.

Each embodiment of the present invention explained in the following description considers the above factors taken into consideration in designing the RACH or ranging channel structure. Particularly, locations of UEs within a cell, a downlink signal state measured by a UE in correspondence to the measured location, and the like are additionally taken into consideration to intensively disclose a scheme for reducing overhead generated from an RACH or ranging channel design to support a large cell.

For this, one embodiment of the present invention proposes an RACH or ranging channel structure and/or a method of providing a sequence applied thereto by considering the aforesaid RACH or ranging channel factors differently requested for each UE within a cell.

Another embodiment of the present invention proposes a method of providing a sequence set for an RACH or a ranging channel differently to meet different requisites regarding why a UE accesses an RACH or a ranging channel and a location of a UE within a cell to reduce collision probability in a random access.

And, a further embodiment of the present invention proposes a method of facilitating a receiving side to detect a sequence carried on an RACH or a ranging channel using a different delay time depending on a location of each UE within a cell.

In order to reduce RACH or ranging channel overhead and decrease collision probability in a corresponding RACH or ranging channel, it should be considered that a different requisite for the RACH or the ranging channel is generated in accordance with a location of a user equipment.

FIG. **5** is a diagram to explain a condition differently requested in accordance with a location of a UE within a cell.

In FIG. **5**, a most outer edge region of a cell supported by a cell is represented as R**3** and a UE lies in the region R**3** is represented as UE**3**. A region in the middle of the cell is represented as R**2** and a UE lies in the region R**2** is represented as UE**2**. A region closest to the base station is represented as a region R**1** and a UE lies in the region R**1** is represented as UE**1**. And, each case is exemplarily depicted in FIG. **5**.

In FIG. **5**, path losses of UE**1**, UE**2** and UE**3** are represented as L_p^1, L_p^2 and L_p^3 and roundtrip delays (RTDs) are represented as $2t_d^1$, $2t_d^2$ and $2t_d^3$, respectively. In this case, $2t_d^1$, $2t_d^2$ and $2t_d^3$ indicate that roundtrip delays are twice greater than delays t_d^1, t_d^2 and t_d^3 taken for unidirectional transmissions, respectively.

Generally, path losses are ordered as $L_p^1<L_p^2<L_p^3$ in correspondence to an order of distance. Likewise, roundtrip delays are ordered as $2t_d^1<2t_d^2<2t_d^3$. So, guard section lengths G_d^1, G_d^2 and G_d^3 necessary according to positions of UE**1**, UE**2** and UE**3** within a cell correspond to $G_d^1<G_d^2<G_d^3$. And, spreading coefficients S_p^1, S_p^2 and S_p^3 of sequences to be applied to a channel also have the relation of $S_p^1<S_p^2<S_p^3$.

Namely, the UE**3** has to access an RACH or a ranging channel with a long RACH or ranging channel and a sequence having a high spreading coefficient in order to have performance equal to that of the UE**1** which accesses an RACH or a ranging channel with a shorter RACH or ranging channel and a low spreading coefficient.

In case of the UE**1**, an RACH or a ranging channel allocated by a base station is used. Yet, if a cell radius is large, a size of the RACH or the ranging channel is designed to fir the condition for supporting a UE at an edge of the cell (e.g., UE**3**).

Hence, it may happen that a UE in the vicinity of the base station, e.g., UE**1** does not actually need such a long RACH or ranging channel.

In particular, if a base station and a user equipment get closer to each other, an RACH or ranging channel having a short length is enough. Moreover, since a length of the RACH or ranging channel is short, a length of a sequence the user equipment should transmit can be decreased. Namely, if a location of a user equipment is known rather than all the user equipments identically use a single long RACH or ranging channel, it is quite correct that an RACH or ranging channel

length and a sequence are suitably selected by obtaining the location to which the user equipment belongs.

In FIG. **5**, unlike user equipments in the region R**3**, a shorter RACH or ranging channel is sufficient for the user equipment in the region R**1** or R**2** within the cell. This is because it is advantageous that a path loss of a signal due to a short distance gets smaller with an RACH or ranging channel having a short distance from a base station. So, if a user equipment belonging to the region R**1** or R**2** accesses an RACH or ranging channel designed for the region R**3** as it is, it is apparent that loss is inevitable.

As mentioned in the foregoing description, the method of reducing the RACH or ranging channel overhead using the RACH or ranging channel having a proper length according to a location of UE in a large cell is well disclosed in Korean Patent Application No. 2006-74764 for 'Signal transmitting and receiving method in communication system, apparatus therefore, and channel structure use for the same' applied for a patent by the present applicant.

In the following description, instead of setting an RACH or a ranging channel to meet the common requisites for entire UEs in a cell, all the schemes for setting requisites for an RACH or a ranging channel to differ in accordance with a location of each UE within a cell is generically named 'segmented access scheme'.

And, as mentioned in the foregoing description, the factors required for a RACH or a ranging channel in accordance with a UE can be designed different in correspondence to a degree of path loss of a downlink signal generated to correspond to the location of the UE within the cell.

Moreover, if a specific UE is a high speed UE, it can be more sensitive to an influence of a frequency offset in an RACH or ranging channel design than a low speed UE. For this, it may be more advantageous that repetition of an RACH or ranging channel preamble or the like is used.

Hence, according to one embodiment of the present invention, a method of providing a different RACH or ranging channel structure by considering factors for an RACH or a ranging channel differently requested per a UE in the RACH or the ranging channel within a cell and/or a sequence applied thereto are provided as an example for the above-mentioned segmented access scheme. And, this is explained as a first embodiment of the present invention in the following description.

According to another embodiment of the present invention, a method of reducing collision probability in an RACH or a ranging channel by differently allocating a sequence in correspondence to a location of a UE or a cause why a UE accesses the RACH or the ranging channel and using the differently allocated sequence in the RACH or the ranging channel is provided as an example for the above-mentioned segmented access scheme. And, this is explained as a second embodiment of the present invention in the following description.

According to a further embodiment of the present invention, to solve a problem that a sequence detection in a receiving side becomes complicated if a sequence configuration is diversified to correspond to a different requisite requested per a UE, a signal receiving method of detecting a sequence used for an RACH or a ranging channel by considering a different delay time in correspondence to a location of each UE is provided. And, this is explained as a third embodiment of the present invention in the following description.

An aspect of adjusting a setup for an RACH or a ranging channel based on a location of a UE within a cell is common to the respective embodiments of the present invention. The first embodiment intensively deals with an aspect of an RACH or a ranging channel and a sequence itself applied to the RACH or the ranging channel. The second embodiment intensively deals with an aspect of transmitting an RACH or a ranging channel. And, the third embodiment intensively deals with an aspect of receiving an RACH or a ranging channel. Yet, schemes according to the embodiments of the present invention can be suitably combined with each other to be used by transmitting and receiving sides.

The first embodiment of the present invention is explained as follows.

FIRST EMBODIMENT

For clarity and facilitation of the following description, a central region is represented as R**1** and a cell edge region is represented as R**2**. Yet, a specific boundary value can be varied to correspond to various conditions. And, a boundary number can be varied to correspond to a condition as well.

FIG. **6** and FIG. **7** are diagrams of schemes for allocating an identical RACH or ranging channel to all UEs.

As mentioned in the foregoing description, if an RACH or a ranging channel is allocated without considering a condition, which is differently demanded in correspondence to a location of a UE within a cell, for the RACH or the ranging channel, a corresponding allocating scheme is shown in FIG. **6** or FIG. **7**.

In this case, a base station simply allocates an RACH or a ranging channel to each UE for each RACH or ranging channel section without considering an RACH or ranging channel condition per a UE. So, signaling overhead is small. Yet, since the corresponding RACH or ranging channel has an RACH or ranging channel structure to support a poorest UE within a cell, overhead can be large for an RACH or ranging channel structure to support a large cell overall.

Hence, according to one embodiment of the present invention, a scheme for providing an RACH or ranging channel structure to meet an RACH or ranging channel requisite for each UE and selecting the corresponding structure in correspondence to a location of the corresponding UE within a cell, a CQ decision or the like is proposed. This is explained as follows.

FIG. **8** and FIG. **9** are diagrams of schemes for allocating an RACH or a ranging channel having a different time domain length in correspondence to a different requisite for each UE according to one embodiment of the present invention.

First of all, an RACH or a ranging channel is provided by a base station to enable a UE failing to be connected to or synchronized with the base station to access the corresponding base station and then notified to the corresponding UE. So, the RACH or the ranging channel enables a random UE to access the base station. Yet, since a corresponding length is increased in a large cell, the base station is unable to frequently generate and provide an RACH or a ranging channel to utilize a resource for a data area. To prevent this, channels differing in length are opened in generating the RACH or the ranging channel and UEs located in different regions are accessible to the channels differing in length.

In particular, in actually allocating RACHs or ranging channels, as shown in FIG. **9**, a short RACH or ranging channel (e.g., RACH A) and a long RACH or ranging channel (e.g., RACH B) are utilized for UEs located in R**1** (or UEs having a corresponding CQ value measured: same in the following description) (long RACH or ranging channel can meet the RACH or ranging channel requisite for UEs located in R**1**). And, UEs located in R**2** are allowed to use a long RACH or ranging channel (e.g., RACH B) only.

By performing the allocation shown in FIG. **8**, collision probability between UEs can be reduced. And, it is also advantageous in that access latency is not varied in accessing an RACH or a ranging channel by a transmitting terminal. Nonetheless, it can be observed that a quantity of a resource allocated to the RACH or the ranging channel by the base station is reduced smaller than an overhead generated from allocating the entire resource long.

In this case, the RACH A and the RACH B are represented as RACHs or ranging channels allocated with different probabilities by the base station, respectively. And, these probabilities are set to minimize a whole collision probability in accordance with the R**1** and R**2** sizes or UE distribution.

If a bandwidth of an RACH or a ranging channel is equal to that of a system or if it is impossible to allocate at least two RACHs or ranging channels to a frequency domain at a time, a long RACH and a short RACH, as shown in FIG. **9**, alternately appears according to the given frequency with cycles adjusted by the base station in the above-explained allocation scheme.

The scheme of allocating an identical RACH or ranging channel regardless of a requisite for each UE in FIG. **6** and FIG. **7** and the scheme of allocating a different RACH or ranging channel by considering a requisite for each UE in FIG. **8** and FIG. **9** are compared to each other in aspect of overhead as follows.

TABLE 1

			UL System BW (MHz)					
RACH Slots per Assignment (Ns)			1.25 <=1	2.5 <=2	5 <=4	10 <=8	15 <=12	20 <=16
RACH Overhead Case 1	P	10	0.100	0.050	0.025	0.013	0.008	0.006
	Ns	1						
	N	1						
RACH Overhead Case 2	P	10	0.200	0.100	0.050	0.025	0.017	0.013
	Ns	1						
	N	2						
RACH Overhead Case 3	P	10	0.300	0.150	0.075	0.038	0.025	0.019
	Ns	1						
	N	3						
RACH Overhead Case 2 - Segmented	P	10	0.150	0.075	0.038	0.019	0.013	0.009
	Ns	1						
	N	2						
	SR	0.50						
	Reduction (%)		25.000	25.000	25.000	25.000	25.000	25.000
RACH Overhead Case 3 - Segmented	P	10	0.200	0.100	0.050	0.025	0.017	0.013
	Ns	1						
	N	3						
	SR	0.50						
	Reduction (%)		33.333	33.333	33.333	33.333	33.333	33.333

In Table 1, 'p' indicates an RACH or ranging channel period by a unit of ms. 'Ns' indicates a number of RACH or ranging channel slots per an RACH or ranging channel periods, 'N' indicates an RACH or ranging channel length by a unit of ms, and 'SR' indicates a rate of an RACH or ranging channel slot having a length of 1TTI.

Comparing 'Case 2' and 'Case 2-Segmented' in Table 1 to each other, it can be observed that one case of applying a scheme for providing and assigning a different RACH or ranging channel structure in accordance with an RACH or ranging channel requisite per a UE according to one embodiment of the present invention (i.e., Case 2-Segmented) obtains an overhead reduced 25% smaller than that of the other case (i.e., Case 2).

Comparing 'Case 3' to 'Case 3-Segmented' to each other, it can be observed that one case according to one embodiment of the present invention (i.e., Case 3-Segmented) obtains an overhead reduced about 33.3% smaller than that of the other case (i.e., Case 3).

As mentioned in the foregoing description, a scheme for enabling UEs in each region within a cell to have different widths on a frequency domain can be provided as well as a scheme for providing UEs in each region within a cell to have different lengths on a time domain.

In the description of the above-explained embodiment of the present invention, a UE, which is located in each region within a cell according to the embodiment for providing a requisite for an RACH or ranging channel based on a location of the UE within the cell, can be applied to correspond to a UE having a CQ value and speed corresponding to each case according to an embodiment for providing an RACH or ranging channel requisite in accordance with a downlink signal attenuation degree (e.g., CQ information) measured by the UE, a speed of the corresponding UE, and the like.

Meanwhile, as a number of available ZCZ sequences in accordance with an increase of a roundtrip time in a large cell is decreased, there rises a problem that a sequence reuse is reduced overall. And, as mentioned in the foregoing description, a preamble needs to be repeated for a UE having a high path loss and a high speed in a large cell.

Hence, another embodiment of the present invention proposes a scheme for increasing a quantity of information that can be delivered using a limited sequence in a manner of using preamble repetition as information of UE, e.g., CQ information.

FIG. **10** is a diagram to explain a method of delivering UE information in correspondence to a preamble repetition count of an RACH or a ranging channel according to one embodiment of the present invention.

First of all, a first RACH or ranging channel structure in an upper end of FIG. **10** represents that a UE having a low speed and a low path loss delivers its CQ information using a single preamble. A second RACH or ranging channel structure represents that a UE having a medium speed and a medium path loss delivers its CQ information by repeating a preamble twice. And, a last RACH or ranging channel structure having a high speed and a high path loss delivers its CQ information by repeating a preamble three times. Thus, the different req-

uisite for each UE may correspond to a condition in accordance with a location of the corresponding UE within a cell.

Referring to FIG. **10**, it is able to deliver more information using a limited sequence in a manner of delivering UE information in accordance with a preamble repetition count.

As mentioned in the above description, a segmented access scheme for configuring an RACH or a ranging channel by considering a different RACH or ranging channel requisite per a UE according to a first embodiment of the present invention has been intensively explained.

A second embodiment of the present invention is explained as follows.

SECOND EMBODIMENT

Despite UEs within a same cell explained in the description of FIG. **5**, a different condition for an RACH or a ranging channel can be demanded in accordance with a location of each UE within a cell.

Meanwhile, a different condition demanded for an RACH or a ranging channel in accordance with a location of UE includes not only the aforesaid RACH or ranging channel length but also a cause for a UE to access an RACH or a ranging channel. Due to this cause, a frequency in accessing the RACH or the ranging channel may differ.

For instance, a UE (e.g., UE**3**) located on a cell edge, as shown in FIG. **5**, may have a more frequency number in accessing an RACH or a ranging channel due to handoff into a neighbor cell than a UE (e.g., UE**1**) located in a cell center.

On the other hand, the UE**1** located at the cell center has to substantially move into a cell edge from the cell center in advance prior to moving into the neighbor cell. So, it is very less probable that direct handoff may happen in the region R**1**.

Hence, a second embodiment of the present invention proposes a method of reducing collision probability in an RACH or a ranging channel in a manner of varying a number of sequences to be used for the RACH or the ranging channel in accordance with where a UE exists within a cell.

Generally, in a real system, a method of notifying a cause why a UE accesses a base station, a downlink CQI, a resource request, and the like using a sequence allocated to an RACH or a ranging channel is needed.

In this case, the reason why a user equipment uses an RACH or a ranging channel is because a great deal of weight is placed on handoff and because newly powered-on user equipments or user equipments waking from idle mode use signals suitable for their situations, respectively.

The downlink CQI is needed for a user equipment to select a good channel when a base station detects a signal carried on an RACH or a ranging channel and then allocates a corresponding resource to the user equipment having accessed the RACH or the ranging channel.

And, the resource request indicates a requirement for a user equipment to transmit data traffic in uplink.

If a number of sequences allocated to an RACH or a ranging channel is N for example, the N sequences should represent a combination of the above-explained informations that should be transmitted to a base station via the RACH or the ranging channel.

Theses informations can be easily represented by a method of rendering each of the informations into a bit sequence and selecting one from a set of N sequences using the bit sequence as an index.

FIG. **11** is a diagram for a structure of a sequence set for generating information in a bitmap format.

FIG. **11** shows types of information delivered to a base station via an RACH or a ranging channel include a cause for accessing an RACH or a ranging channel, a random ID, a CQI, and the like. A bitmap format shown in FIG. **11** to have an identical bit number for each information is applied in common to entire UEs within a corresponding cell. Yet, a corresponding sequence is selected from suitable sequences each of which indicates corresponding information via a bit number assigned to each information. Namely, in FIG. **11**, the entire UEs within the cell use a same sequence set.

The above scheme is convenient for implementation but may be disadvantageous as a method for reducing collision in an RACH or a ranging channel. This is because a cause for a user equipment to access an RACH or a ranging channel and a frequency number for accessing the RACH or the ranging channel with each cause may totally differ from each other and because it may be inefficient for the entire user equipments to use the sequence selected from the sequence set having the bitmap structure regardless of the frequency number.

For instance, a type of a user equipment accessing an RACH or a ranging channel most frequently corresponds to a handoff user equipment. And, a user equipment having a power turned on, a user equipment making a request for a resource, a user equipment performing timing synchronization, and the like follow the handoff user equipment in order. Os, if more protection is carried out on the most frequently occurring case, it is able to reduce probability of collision occurrence between user equipments in the same RACH or ranging channel.

More preferably, a sequence set suitable for each case is allocated to keep collision probability below a prescribed level by inquiring into a distribution of causes for accessing the RACH or the ranging channel.

Thus, according to one embodiment of the present invention proposes a method of reducing collision probability in an RACH or a ranging channel by providing a sequence set including a sequence number differing in accordance with a cause for a user equipment to access the RACH or the ranging channel as well as a current location of a user equipment within a cell.

FIG. **12** is a diagram of a example for differentiating a number of CQIs and a number of random IDs due to a cause for a user equipment to access an RACH or a ranging channel according to one embodiment of the present invention.

FIG. **12** shows a case that a user equipment accesses an RACH or a ranging channel due to a cause of handoff. Resource allocation request (Resource Request), or synchronization. And, FIG. **12** shows that each of the causes can be represented as a single number of cases (yet, unlike the drawing of FIG. **12**, it is apparent to those skilled in the art that each of the causes can be represented as more number of cases in accordance with a number of available sequences and a number of RACH or ranging channel access causes.).

Moreover, FIG. **12** shows a single CQI is allocated to each of the causes since information report for a downlink channel status is relatively unnecessary in case of handoff for example, and also show that CL**1**, CL**2** and CL**3** CQIs are allocated to the cases of the power-on, the resource request and the synchronization, respectively.

Meanwhile, in case of the handoff occurring by the most frequency number among the shown causes, numerous random IDs are allocated to accommodate more user equipments to access an RACH or a ranging channel. In case of other causes, a less number of random IDs are allocated.

Thus, by providing a sequence set, in which numbers N**1**, N**2**, N**3** and N**4** of sequences indicating corresponding infor-

mation in accordance with the cause for a user equipment to access an RACH or a ranging channel are specified, the following effect can be brought.

Once the number of sequences, as shown in FIG. **12**, is assigned according to each cause for accessing an RACH or a ranging channel, it is decided as one since a variation of CQI is small in case of the handoff frequently used by a user equipment, as mentioned in the foregoing description for example. Instead, more random IDs are assigned. Hence, it is able to reduce collision probability by lowering probability in having the same sequence selected despite accesses made by several user equipments. In particular, in case of using sequences amounting to a different number of cases according to a cause for a user equipment to access an RACH or a ranging channel, collision probability in the RACH or the ranging channel can be lowered.

This scheme can be applied together with the aforesaid segmented access scheme. A user equipment located at a cell center in a relatively large cell and a user equipment located at a cell edge explicitly differ from each other in the cause for accessing an RACH or a ranging channel.

For instance, since a user equipment located at a cell center has no reason to perform handoff, a sequence may not be allocated for that use at all. Yet, it may be more preferable that a minimum handoff sequence is allocated for compatibility.

Meanwhile, in case that a power is turned on, the resource request or the like is more frequently generated within a cell than the handoff. So, sequences reduced for allocation to the handoff can be additionally allocated for these causes.

On the contrary, in case of a user equipment located at a cell edge, it is highly probable that handoff into a neighbor cell may be frequently used. So, an RACH or ranging channel ratio using handoff is very high. So, it is preferable that a number sequences corresponding to handoff is increased at the cell edge.

Namely, if a cell is discriminated by a distance from a base station, frequency of an RACH or ranging channel access cause for each user equipment in a corresponding region varies. So, it is able to allocate a sequence using this factor.

FIG. **13** is a diagram of a example for differentiating a number of CQIs and a number of random IDs in correspondence to a cause for a user equipment to access an RACH or a ranging channel and a location of the user equipment within a cell according to one embodiment of the present invention.

For instance, a number of sequences available for representing each information in FIG. **13** can be provided as follows.

1) Case of Handoff: NIC in sequence for user equipment at cell center<<NIE in sequence for user equipment at cell edge

2) Case of Power-on: N**2**C in sequence for user equipment at cell center>N**2**E in sequence for user equipment at cell edge

3) Case of Resource Request: N**3**C in sequence for user equipment at cell center>N**3**E in sequence for user equipment at cell edge

4) Case of Synchronization: N**4**C in sequence for user equipment at cell center>N**4**E in sequence for user equipment at cell edge

Namely, in the above-explained example, 8 kinds of sequence sets can be provided according to a location of a user equipment within a cell and a cause for a user equipment to access an RACH or a ranging channel (e.g., a set of N**1**C sequence to represent a case of handoff of a cell center user equipment, a set of N**1**E sequences representing handoff of a cell edge user equipment, etc.).

Thus, in a method of providing a sequence set for an RACH or a ranging channel according to one embodiment of the present invention, information on a cause for accessing an RACH or a ranging channel, random ID, CQI and the like is decided as a type of information to be represented via a corresponding sequence. And, a sequence set is provided in a manner that an allocation degree of a sequence number according to each of the information is differently specified according to a location of a user equipment within a cell in the course of deciding allocation information on the sequence number according to each corresponding information.

Of course, a sequence number is allocated by considering a cause for a user equipment to access an RACH or a ranging channel as well as a location of the user equipment within a cell, as mentioned in the foregoing description. Hence, it is more efficient to lower collision probability in an RACH or a ranging channel.

In the above-explained embodiment, a location of a user equipment within a cell may mean a distance from a base station itself. Preferably, preset information, which indicates that a user equipment belongs to which region within a cell, is represented within reference to the distance from the base station.

For instance, if a user equipment is remote from a base station over a predetermined distance, the user equipment decides that it is located at a cell edge. If a user equipment is remote from a base station below a predetermined distance, the user equipment decides that it is located at a cell center. Thus, a distance, which becomes a reference to discriminate a region within a cell, may be equal to or greater than 1. An extent of each reference distance can be decided by depending on various factors including an antenna height of a base station, a transmission power, and the like, which brings signal attenuation, roundtrip delay time, and the like.

FIG. **14** is a graph for an increasing transition of an RACH or ranging channel length requested in correspondence to an increasing distance between a user equipment and a base station in proportion to an antenna length of the base station.

In FIG. **14**, a horizontal axis indicates a distance between a UE from a node B (or a base station) by a unit of km and a vertical axis indicates a number of subframes occupied by an RACH or a ranging channel according to the distance. In FIG. **14**, it is assumed that the subframe has a length of 0.5 ms as currently provided by 3GPP LTE.

Referring to FIG. **14**, in case that an antenna length of a base station (height of base station: hbs) is 90 m, compared to a case that the hbs is 60 m or 30 m, an increment of the number of the subframes necessary for the distance increasing from the base station is small. Yet, in case that the hbs is 30 m, the number of the necessary subframes is rapidly incremented according to the distance.

Hence, according to one embodiment of the present invention, the distance from the base station, which is used to discriminate a region within a cell is decided by considering the antenna height of the base station.

For instance, in case that the inner cell region discrimination is carried out by dividing a cell into three regions R**1**, R**2** and R**3**, as shown in FIG. **5**, distances (e.g., D**1** and D**2**) corresponding to references for this discrimination in case of the hbs 90 m can be set greater than those in case of the hbs 30 m. And, various factors including a transmission power and the like as well as the aforesaid antenna height of the base station (hbs) can be taken into consideration for the region discrimination.

In the example shown in FIG. **13**, the region discrimination according to a location of a user equipment within a cell is carried out into two regions. And, causes for a user equipment to access an RACH or a ranging channel include four kinds of handoff, power-on, resource request and synchronization for

example. So, eight kinds of sequence sets are provided. Yet, the sequence set provision is just exemplary. And, it is apparent to those skilled in the art that sequences can be allocated and provided with arbitrary combinations of the causes if collision probability is reduced by providing sequences differing from each other according to a cause for a user equipment to access an RACH or a ranging channel and a location of a user equipment within a cell.

In the above-explained embodiment of the present invention, it is assumed that all the UEs know path loss and roundtrip delay values in accordance with a distance from the base station to some extent. Yet, a UE may have difficulty in deciding the distance from the base station by itself.

If so, rather than providing a different RACH or ranging channel in accordance with the distance between the base station and the UE, it is able to apply a method of selecting a suitable RACH or ranging channel requisite in accordance of measurement performed by the UE itself in a manner of providing an RACH or a ranging channel differing in an arbitrary means for enabling the UE to judge a requisite requested in accordance with a location of the UE within the cell, i.e., an attenuation extent of a downlink signal (e.g., downlink CQ information to each UE, etc.).

Moreover, a UE speed and the like, as explained for the first embodiment, as well as the downlink signal attenuation extent can be taken into consideration as the RACH or ranging channel requisite differently requested by each UE.

Hence, one preferred embodiment of the present invention proposes a method of considering a speed of UE in addition in judging the different requisite for the RACH or the ranging channel per UE. In particular, a corresponding UE obtains information about its location within a cell in accordance with a downlink signal attenuation extent, selects an RACH or ranging channel structure and/or sequence suitable for the information about its location within the cell and/or its speed, and then transmits a signal using the selected structure and/or sequence.

Explained in the following is a method of transmitting a signal in a manner that a user equipment accesses an RACH or a ranging channel using a combination of sequences or a sequence set differently provided in accordance with a location of the user equipment within a cell and the like.

FIG. **15** is a flowchart to explain a signal transmitting method according to one embodiment of the present invention.

In a signal transmitting method of a user equipment according to one embodiment of the present invention, a user equipment selects a sequence set in accordance with its location within a cell and then accesses an RACH or a ranging channel by selecting a sequence from the selected sequence set. For this, information indicating a prescribed location of the corresponding user equipment within the cell needs to be obtained by a step S**1001** shown in FIG. **15**. The information on the location within the cell can be acquired from attenuation of a downlink signal from a base station. And, a acquisition of the information on the location within the cell is disclosed in detail in the aforesaid Korean Patent Application No. 2006-74764.

The aforesaid Korean Patent Application No. 2006-74764 teaches that a user equipment is able to measure a distance from a base station via an extent of attenuation of a downlink signal from the base station. Yet, if the measurement is not available, the user equipment is able to acquire location information in a manner of transmitting an initiation access signal on the assumption of a distance that is farthest from the base station and then receiving a signal from the base station in response to the initiation access signal. Yet, location information of a user equipment within a cell can be obtained in advance prior to accessing a corresponding RACH or a ranging channel. And, it is unnecessary to go though the step S**1001** each time for a signal transmission of the user equipment via an RACH or a ranging channel.

In case that the information indicating the location of the user equipment within the cell is acquired, the user equipment is able to decide a region to which the user equipment itself belongs in a step S**1002** using the acquired information. Such a region decision can be carried out in a manner of deciding to be located at a cell edge if the user equipment is spaced apart from the base station over a specific distance or at a cell center if the user equipment is spaced apart from the base station within a specific distance. Yet, the cell can be divided into three regions instead of two. If so, regions are discriminated from each other according to two kinds of specific distances from the base station. As mentioned in the foregoing description, this region discrimination can be decided according to various factors including an antenna length of a base station, a transmission power, and the like.

Once the location information of the user equipment within the cell is obtained and the corresponding region decision is completed, such a step as a step S**1003** can be carried out to obtain information on a cause for accessing an RACH or a ranging channel.

To a sequence set for an RACH or a ranging channel according to one embodiment of the present invention, a different sequence number is allocated in accordance with a location of the user equipment within the cell only. Instead, it may be more preferable that a different sequence number, as shown in FIG. **13**, is allocated in accordance with RACH or ranging channel access cause information as well as the location information.

After the location information within the cell and the ranging channel access cause information have been obtained, the user equipment is able to select a corresponding sequence set in a step S**1004**. For instance, in the example shown in FIG. **13**, if the user equipment is decided to be located at the cell edge because the location of the user equipment is beyond the prescribed distance and if a cause for the user equipment to access the RACH or the ranging channel is handoff, a sequence set having N**1**E sequences allocated thereto is selected.

After the sequence set has been selected, the user equipment checks additional information to deliver to the base station in a step S**1005**. For instance, in case of transmitting CQI information indicating a downlink channel quality, a sequence suitable for indicating a corresponding CQI is selected from the sequence set.

Having selected a sequence having a randomly selected random ID from the corresponding sequence set in a step S**1006**, the user equipment accesses an RAH or a ranging channel through the selected sequence (step S**1007**).

In the above description, a signal transmitting method of a user equipment via an RACH or a ranging channel according to one embodiment of the present invention has been explained. And, it is apparent to those skilled in the art that an RACH or a ranging channel can be accessed by a scheme different from the sequence set selecting step and the step of selecting the suitable sequence from the corresponding sequence set if the RACH or the ranging channel is accessed using a sequence differently allocated in accordance with a location of a user equipment within a cell and a cause for the user equipment to access the RACH or the ranging channel. So, no limitation is put on the above embodiment.

For clarity and convenience of explanation, a terminology 'sequence set' is used to describe each set having a different

number of sequences allocated thereto in accordance with a location of a user equipment within a cell in the following description.

FIG. **16** is a diagram of a signal transmitting device according to one embodiment of the present invention.

Referring to FIG. **16**, a signal transmitting device according to one embodiment of the present invention includes a sequence selecting module **1101** and an access module **1102**.

The sequence selecting module **1101** selects a sequence in accordance with information to be delivered to a base station. And, the sequence selecting module **1101** can include a sequence set selecting module **1101***a* and an application sequence selecting module **1101***b* in accordance with its function.

The sequence set selecting module **1101***a* obtains a location of a user equipment within a cell and then selects a corresponding sequence set set_k through intra-cell inclusive region information decided according to the obtained location. Optionally, a mentioned in the foregoing description, if a sequence set is selected by considering a case for a user equipment to access an RACH or a ranging channel as well the intra-cell location information, it is able to more efficiently reduce collocation probability in the RACH or the ranging channel.

The selected sequence set set_k is inputted to the application sequence selecting module **1101***b*. The application sequence selecting module **110***b* then selects a suitable sequence $sequence_i$ by considering other informations including CQI to be delivered to a base station via the RACH or the ranging channel.

In case that a sequence to be applied to the RACH or the ranging channel is selected, the access module **1102** accesses the RACH or the ranging channel through the sequence $sequence_i$. Through this, the signal transmitting device according to one embodiment of the present invention can reduce the collision probability in the RACH or the ranging channel.

Thus, according to a second embodiment of the present invention, collision probability in an RACH or a ranging channel can be reduced in a manner of allocating a sequence set differently based on an intra-cell location of each UE and preferably a cause for a user equipment to access an RACH or a ranging channel and then using the allocated sequence set.

Meanwhile, explained in the following description is a signal receiving method using a different delay time in accordance with an intra-cell location of a UE (i.e., the segmented access scheme in a broad meaning), which is to facilitate a receiving side to perform a sequence detection in an RACH or a ranging channel if factors for a sequence get complicated, according to a third embodiment of the present invention.

THIRD EMBODIMENT

To meet the different factor in accordance with an intra-cell location of a UE, as mentioned in the foregoing description of FIG. **5**, if a different sequence is used in accordance with the intra-cell location of the UE, more burden is imposed on a base station that searches for a sequence used for an RACH or a ranging channel.

In case that all information delivered to a base station is carried by a sequence applied to an RACH or a ranging channel, sequence types used for the RACH or the ranging channel are more diversified. Yet, this may be accompanied with a reduction of a number of available sequences.

Hence, a third embodiment of the present invention intends to provide a method of representing information to be delivered to a base station using another scheme except a sequence type and reducing a burden imposed on a base station in searching for a sequence used for an RACH or a ranging channel.

A third embodiment of the present invention intends to propose an efficient sequence searching method and an efficient signal receiving method by paying attention to a fact that a signal carried on an RACH or a ranging channel is delivered with delay information differing in accordance with a location of a UE among the conditions differently requested in accordance with an intra-cell location of the UE in the description of FIG. **5**.

In particular, a signal is transmitted at a timing point distant by a roundtrip delay corresponding to a location of a UE from a reference timing corresponding to a downlink signal transmitting timing point. So, if a cell size is increased, a section having a signal spread therein is elongated. Such delay information facilitates a sequence detection performed by a receiving end and provides a UE with an additional RACH or ranging channel access opportunity.

In a related art, a delay time for a signal detected within an RACH or a ranging channel is used as information for a timing detection for a UE only. Yet, there exists a scheme for enabling the information to carry more additional information. Namely, if a signal delay is interpreted in a different way, it is advantageous to obtain better features.

This is considered in all aspects with reference to FIG. **17** as follows.

FIG. **17** is a diagram for a roundtrip delay time of an RACH or ranging channel signal received by a base station.

Referring to FIG. **17**, if a timing point of transmitting a downlink signal from a base station is set to a reference timing point, an RACH or ranging channel signal transmitted by a cell center UE in response to the downlink signal from the base station has a short roundtrip delay time, whereas an RACH or ranging channel signal transmitted by a cell edge UE in response to the downlink signal from the base station has a relatively long roundtrip delay time. So, a signal in a receiving end seems to be discriminated by a delay time in each of the cell edge UE and the cell center UE. Thus, a roundtrip delay difference in accordance with a region to which a prescribed location of a UE belongs among a plurality of regions within a cell is generally increased to correspond to an increasing cell size.

Hence, one embodiment of the present invention proposes a method of reducing a search time in a manner of differently setting a sequence set (a set variation of a reference set (e.g., PN, CAZAC, etc.), a cyclic shift set variation, a cyclic shift interval variation, etc.) that should be searched with the delay time by the receiving end in detecting an RACH or ranging channel signal. In this case, the delay time means a roundtrip delay time until a base station receives an RACH or ranging channel signal from a corresponding UE in response to a downlink signal from the base station if a downlink transmission timing point of the base station is set to a reference timing point. And, the delay time increases in proportion to a distance between the UE and the base station.

As taught by the aforesaid patent application and the first and second embodiments of the present invention, if a sequence to be used in accordance with a region to which an intra-cell location of a UE belongs is set, it is possible to perform a search by taking a sequence set, which is assigned to be used for a corresponding region with reference to an arriving timing point of an RACH or ranging channel signal, as shown in FIG. **17**, and more particularly, to a start timing point of a sequence used for an RACH or a ranging channel as a search target sequence only. This scheme is explained with reference to FIG. **18** for example as follows.

FIG. **18** is a diagram to explain a method of changing a sequence set searched in correspondence to a delay time of an RACH or ranging channel signal received by a base station according to one embodiment of the present invention.

FIG. **18** shows a sequence searching scheme according to one embodiment of the present invention by taking a case of discriminating a cell into two regions, a cell center and a cell edge as an example.

If a delay time is smaller than a prescribed threshold a at a reference time position, it is the delay time a transmission signal of a cell center UE can have only. It is unnecessary to search for a sequence used by a cell edge UE.

If a delay time is greater than another prescribed threshold tb, a transmission signal of a cell center UE is unable to have the delay time. So, sequences used by cell edge UEs are searched only.

In FIG. **18**, assuming that a sequence used by the cell center UE is named a sequence set **1** and a sequence used by the cell edge UE is named a sequence set **2**, if the delay time is equal to smaller than ta, the sequence set **1** is searched as a search target sequence set. If the delay time is equal to or greater than tb, the sequence set **2** is searched as a search target sequence set.

Yet, if a UE approaches a boundary between the cell center and the cell edge, unless the UE is able to accurately recognize its location, a location of the UE may be irregularly determined between the cell center and the cell edge. So, sequences of both regions will be mixed and used. So, if a delay time of a received signal is in the vicinity of a maximum roundtrip delay time of a UE within a cell, i.e., in the region except a region (region below ta) a signal of an intra-cell UE can have only and a region (region above tb) a signal of a cell edge UE can have only ($ta \leqq RTD \leqq tb$), it is preferable that the entire sequence sets are searched. Yet, since a number of sequences searched for each delay time can be reduced overall, the base station is able to considerably reduce complexity of calculations.

As mentioned in the above description, using the sequence search method shown in FIG. **18**, there is another advantage as well as the complexity of calculations is reduced. For instance, there is no problem in using different zero correlation zones for sequences used in the cell center and the cell edge, respectively.

Generally, a representative sequence used for an RACH or a ranging channel is a CAZAC sequence. And, a number of available CAZAC sequences amounts to a multiplication of a number of mother sequences according to ID of CAZAC sequence and a number of ZCZ transformable by applying a cyclic shift to the CAZAC sequence. Preferably, ZCZ has an interval enough for a receiving end to discriminate the ACA even if a cyclic shift is applied within CAZAC sequence. Since vagueness of a cyclic shift applied to a sequence by a receiving end can be generated due to delay spreading and the like, a sequence having a short ZCZ length is preferably applied in case of a cell center UE having small, delay spreading and the like. In case of a cell edge UE, it is preferable that a sequence having a long ZCZ length is used.

Based on this, a transmission signal of a cell center UE and a transmission signal of a cell edge UE, as shown in FIG. **18**, are discriminated from each other in accordance with a delay time of a received RACH or ranging channel signal and each corresponding sequence set is searched only.

So, even if ZCZ uses a different sequence, vagueness of discrimination is reduced.

In particular, if a mother sequence used for a search target sequence set **2** and a mother sequence used for a search target sequence set **1** are set different from each other, a base station performs a detection with a received delay time even if the mother sequences have ZCZs differing from each other in interval. So, it is more preferable that vagueness is not generated in detecting ZCZs having different intervals from different mother sequences, respectively.

The above-explained scheme corresponds to a physical delay phenomenon generated in accordance with a distance between a UE and a base station.

Yet, another embodiment of the present invention proposes a scheme for attaching an intentional delay time thereto. In this case, the intentional delay means a scheme for inserting an additional delay to discriminate a signal transmitting timing point from a physical delay time in accordance with information to be transmitted to a base station. Such a scheme is explained with reference to FIG. **19** as follows.

FIG. **19** is a diagram to explain a method of inserting intentional delay information in a transmission signal by a UE according to one embodiment of the present invention.

In case that a physical delay time in a given cell size is (roundtrip delay time+delay spreading), FIG. **19** proposes a scheme that an intentional delay time corresponding to a size of each section (Section **1**, Section **2**, . . .) divided on a time axis in FIG. **19** defines an additional region, as shown in FIG. **19**, using a size of the aforesaid delay time as a basic unit. And, it is not mandatory to limit a unit of an intentional delay to a size of a physical delay time. Actually, it can be greater or smaller than the physical delay time. Yet, it may be preferable that a time section for an intentional delay is set to a unit of a physical delay of a whole region UE within a cell in that a base station as a receiving end does not confuse a physical delay time of an RACH or ranging channel signal transmitted by a UE in each region with a quantity of an intentional time delay for delivering corresponding information.

In case that an intentional delay, as shown in FIG. **19**, is inserted, a transmission start area of each preamble becomes an RACH or ranging channel preamble transmission position provided in advance to coincide with information defined in the corresponding position.

Namely, in case that each time section shown in FIG. **19** is interpreted as CQ information, a UE calculates downlink CQ information and then transmits an RACH or a ranging channel signal at a corresponding preamble transmission start position. If so, an additional sequence is unnecessary to transmit CQI. So, overall sequence reuse increases. Information transmittable with reference to a delayed position includes CQ information, RACH or ranging channel access cause information, random ID information, or the like.

Meanwhile, in case that each section (Section **1**, Section **2**, . . .) divided on a time axis uses a sequence of a same mother index, it may happen that different ZCZ sequences having the same mother sequence transmitted from different sections are not discriminated from each other due to a delay.

Hence, according to one embodiment of the present invention, since an RACH or ranging channel preamble transmitted from a start position of each section in delivering an RACH or ranging channel signal should be a discriminative sequence, it is able use a ZCZ sequence set of which different mother sequences are used by the sections, respectively.

According to one embodiment of the present invention, the sequence searching method shown in FIG. **18** is executable as soon as information is delivered by the scheme shown in FIG. **19**.

FIG. **20** is a diagram to explain a method of interpreting information based on a delay time, which is attributed to a location of a UE having transmitted an RACH or ranging

channel signal received by a base station, and intentional delay time according to one embodiment of the present invention.

FIG. **20** shows a case that a time section for an intentional delay is set equal to or greater than a maximum roundtrip delay time, which is physically possible, to discriminate a physical delay time.

In particular, an RACH or ranging channel signal from a UE in a region located at a cell edge selecting a transmission timing point as a section **1** according to information to be delivered is set to arrive at a base station faster than an RACH or ranging channel signal of a UE in a region at a cell center selecting a transmission timing point as a section **2**. In case that a time section for an intentional delay is set to a first time section and a time section according to a physical delay time is set to a second time section, it is assumed that the first time section is wider than the second time section and that a section according to all the second time sections is included each section on a time axis having the first time section.

Hence, it is able to prevent a location of a UE having transmitted a corresponding RACH or ranging channel signal from being confused due to an intentional delay according to information to be delivered.

A base station is able to select a search target sequence set according to a delay time of a received signal in each section shown in FIG. **20**. For instance, search is carried out in a manner of setting a sequence set having ZCZ_i of a mother sequence called a sequence a until a prescribed time in a section **1** shown in FIG. **20** and then using a sequence set having ZCZ_j of the same mother sequence as a search target sequence after the corresponding time.

Hence, as a number of search target sequences is decremented, calculation complexity in the base station can be reduced.

Meanwhile, the UE selects a section for transmitting an RACH or ranging channel signal with an intentional delay according to information to be delivered to the base station and then transmits the signal. The base station then interprets the delivered information according to which section corresponds to a start timing point of the sequence used for the received RACH or ranging channel signal.

In this case, if each section uses a different mother sequence, it is preferable to reduce vagueness of discrimination. And, FIG. **20** shows that a sequence b as a different mother sequence is used for the section **2** unlike the section **1**. Of course, if a search target sequence set is selected within the section **2** using a physical delay time, it is able to facilitate the base station to perform a sequence search.

To carry out the above-explained sequence searching and signal transmitting/receiving methods, the following device configuration is preferably used. A sequence searching device and a signal transmitting device are explained as follows.

FIG. **21** is a block diagram of a sequence searching device for searching a sequence used for a received RACH or ranging channel signal and a signal transmitting device of a base station for interpreting received information as soon as the sequence is searched according to one embodiment of the present invention.

Referring to FIG. **21**, a signal transmitting device according to one embodiment of the present invention includes a transmitting unit **901**, a receiving unit **902**, and a sequence searching unit **903**.

The sequence searching unit **903** shown in FIG. **21** is cable of playing a role as an independent sequence searching device. And, the sequence searching unit **903** can include a search sequence set selecting unit **903***a*, a used sequence searching unit **903***b*, and a sequence set storing unit **903***c*.

A signal transmitting device according to another embodiment of the present invention can further include an information interpreting unit **904** as well as the above-explained elements.

The above device configuration is included in a base station. And, the base station can include a transmitting unit **901** and a duplexer **905** enabling an antenna to be shared by the transmitting unit **901** and the receiving unit **902**.

Details of the above elements are explained in the following description.

According to one embodiment of the present invention, the base station is able to transmit a downlink signal via the transmitting unit **901**. And, the transmitting unit **901** can include a transmission timing point recording unit **901***a* recording a timing point ts of transmitting the downlink signal.

Such a transmission signal is transmitted in downlink via the duplexer **905**. If a UE transmits an RACH or ranging channel signal in response to the transmission signal, the base station receives the RACH or the ranging channel signal via the duplexer **905** using the receiving unit **902**.

And, the receiving unit **902** can have a reception timing point recording unit **902***b* recording a timing point tr of receiving the RACH or the ranging channel signal like the transmitting unit **901**.

Informations ts and tr for the timing points of the transmission and reception timing point recording units **901***a* and **902***a* are inputted to the search sequence set selecting unit **903***a*.

The search sequence selecting unit **903***a* calculates a roundtrip delay time RTD via a delay time corresponding to a difference between the transmission timing point ts and the reception timing point tr and then selects a search target sequence set (sequence set_a) from stored sequence sets stored in the sequence set storing unit **903***c* through the calculated roundtrip delay time RTD. Information on the selected search target sequence set (sequence set_a) is then delivered to the used sequence searching unit **903***b*.

The used sequence searching unit **903***b* searches that a sequence used for the RACH or ranging channel signal received by the receiving unit **902** belongs to which sequence of the search target sequence set (sequence set_a). This search can be executed by a correlation operation between the RACH or ranging channel signal and each of search target sequences or decided by another arbitrary operation.

Thus, in case that the used sequence searching unit **903***b* checks which sequence is used for the received RACH or ranging channel signal, synchronization is estimated using the corresponding sequence. If there exists information inserted in the corresponding sequence, it can be obtained.

According to another embodiment of the present invention, an information interpreting unit **904** can be included to interpret information delivered to the base station through an extent of a delay confirmed through the timing point information of the transmitting unit **901** and the receiving unit **902**, and more particularly, through an extent of the intentional delay explained with reference to FIG. **19** and FIG. **20**.

The information interpreting unit **904** is able to receive transmission timing point information ts from the reception timing point recording unit **901***a* of the transmitting unit and reception timing point information tr from the reception timing point recording unit **902***a* of the receiving unit **902**.

Through this, the information interpreting unit **904** is able to calculate a roundtrip delay time of a received signal. In the present embodiment, the roundtrip delay time includes an intentional delay time for information delivery as well as a

physical delay attributed to an intra-cell location of the UE having transmitted the corresponding signal.

Information obtained by the information interpreting unit **904** through the roundtrip delay time information includes CQ information, random access cause information, random ID information, and the like, as shown in FIG. **21**. And, every random information deliverable to the base station via an uplink signal can be included in the corresponding information.

Configurational features of a signal transmitting device of a UE according to one embodiment of the present invention are explained as follows.

FIG. **22** is a block diagram of a signal transmitting device of a UE for transmitting a signal in a manner of inserting intentional delay information in an RACH or ranging channel signal according to one embodiment of the present invention.

Referring to FIG. **22**, a signal transmitting device according to one embodiment of the present invention includes a receiving unit **1001**, a transmitting unit **1002**, and a transmission timing point delaying unit **1003**.

The signal transmitting device is preferably included in a UE and can include a duplexer **1004** for enabling an antenna to be shared by both of the receiving and transmitting units **1001** and **1002**. The respective elements are explained in more detail as follows.

First of all, the receiving unit **1001** receives a downlink signal transmitted by a base station and then records a corresponding reception timing point. Such a reception timing point recording, as shown in FIG. **22**, can be performed by a separate reception timing point recording unit **1001***a*.

The UE having received the downlink signal is able to transmit a necessary RACH or ranging channel signal if a random access to the base station is needed. And, such an RACH or ranging channel signal can be transmitted via the transmitting unit **1002**.

Yet, according to one embodiment of the present invention, a transmission timing point delaying unit **1003** can be further included to intentionally delay a transmission timing point according to information to be delivered to the base station in a downlink signal reception and an RACH or ranging channel signal transmission in response thereto. Through this, the base station receiving an RACH or ranging channel signal transmitted via the transmitting unit **1002** is able to obtain corresponding information according to an extent of an intentional delay.

Of course, as mentioned in the foregoing description with reference to FIG. **19** and FIG. **20**, a time intentionally delayed by the transmission timing point delaying unit **1002** is equal to greater than a quantity resulting from adding a physical delay according to an intra-cell location of a UE, i.e., a roundtrip delay time and a delay spreading together, which is preferable for the base station to discriminate a sequence.

The aspect in adjusting a setup for an RACH or a ranging channel based on intra-call location of UE is common to the first to third embodiments of the present invention.

The first embodiment of the present invention intensively deals with an RACH or ranging channel configuration itself according to RACH or ranging channel requisites differing from each other per UE.

The second embodiment of the present invention intensively deals with the aspect in transmitting an RACH or ranging channel.

And, the third embodiment of the present invention intensively deals with the aspect in receiving an RACH or ranging channel.

Moreover, the schemes according to the respective embodiments of the present invention can be appropriately combined together to be used by both of the transmitting and receiving sides.

For instance, in case that an RACH or a ranging channel is accessed using a sequence set differently allocated according to an intra-cell location of a UE and/or a cause for a UE to access the RACH or the ranging channel, a transmission timing point of the RACH or the ranging channel for an additional information transmission can be adjusted by the third embodiment to be transmitted.

And, a sequence set differently allocated according to an intra-cell location of each UE and/or a cause for a UE to access the RACH or the ranging channel according to the second embodiment can be a sequence set to be applied to an RACH or a ranging channel configured to meet a different RACH or ranging channel requisite per UE according to the first embodiment. Namely, if a sequence set is established according to the second embodiment, a peed of UE and the like can be additionally taken into consideration by considering such a condition as a frequency offset and the like according to the first embodiment.

Moreover, when a receiving side searches sequences by considering a delay time of an RACH or a ranging channel according to the third embodiment, a sequence set considered in accordance with each delay time can be a sequence set differently allocated in accordance with an intra-cell location of a UE and/or a cause for a UE to access an RACH or a ranging channel according to the second embodiment. This can be transmitted via an RACH or ranging channel structure established according to the first embodiment.

While the present invention has been described and illustrated herein with reference to the preferred embodiments thereof, it will be apparent to those skilled in the art that various modifications and variations can be made therein without departing from the spirit and scope of the invention. Thus, it is intended that the present invention covers the modifications and variations of this invention that come within the scope of the appended claims and their equivalents.

INDUSTRIAL APPLICABILITY

Accordingly, a signal transmitting/receiving method and apparatus and a sequence allocating method for the same according to the respective embodiments of the present invention are applicable to 3GPP LTE system.

Yet, a basic configuration of a scheme of allocating a sequence by considering different requisites in accordance with an intra-cell location of a UE and then detecting a corresponding sequence is applicable to every random mobile communication system to which a different requisite is requested in accordance with an intra-cell location of a UE, a terminal, a mobile device or the like as well as to the 3GPP LTE system.

What is claimed is:

1. A method for a specific user equipment (UE) to transmit a signal via a random access channel, the method comprising:

selecting one random access preamble sequence set from among predetermined random access preamble sequence sets considering at least one of a size of information to be transmitted by the specific UE and a degree of a path loss;

randomly selecting a specific sequence within the selected random access preamble sequence set; and

transmitting the selected sequence via the random access channel.

2. The method of claim **1**, wherein the specific sequence is a CAZAC (Constant Amplitude Zero Auto Correlation) sequence.

3. The method of claim **1**, wherein the path loss is determined as a path loss of a downlink signal.

4. The method of claim **1**, wherein the degree of the path loss is determined in accordance with a intra-cell location of the specific user equipment.

5. The method of claim **1**, wherein the predetermined random access preamble sequence sets are pre-allocated by being additionally discriminated in accordance with a cause for each user equipment to access the random access channel.

6. The method of claim **5**,

wherein the information to be transmitted by the specific user equipment comprises at least one of information on the cause to access the random access channel, a random ID, and a channel quality indicator (CQI).

7. The method of claim **5**, wherein the cause to access the random access channel comprises a handoff, a power-on, a resource request, and a synchronization acquisition.

8. An apparatus for transmitting a signal, the apparatus comprising:

a sequence selecting module acquiring information about predetermined two or more random access preamble sequence sets, selecting one random access preamble sequence set from among the predetermined random access preamble sequence sets considering at least one of a size of information to be transmitted by the apparatus and a degree of a path loss, and randomly selecting a specific sequence within the selected random access sequence set; and

an access module accessing a random access channel using the specific sequence selected by the sequence selecting module.

9. The apparatus of claim **8**, wherein the specific sequence is a CAZAC (Constant Amplitude Zero Auto Correlation) sequence.

10. The apparatus of claim **8**, wherein the degree of the path loss is determined in accordance with an intra-cell location of the apparatus.

11. The apparatus of claim **8**, wherein the predetermined random access preamble sequence sets are pre-allocated by being additionally discriminated in accordance with a cause for each user equipment to access the random access channel.

* * * * *

EXHIBIT 3

US007809373B2

(12) **United States Patent**
Park et al.

(10) **Patent No.: US 7,809,373 B2**
(45) **Date of Patent: Oct. 5, 2010**

(54) **METHOD OF TRANSMITTING AND RECEIVING RADIO ACCESS INFORMATION IN A WIRELESS MOBILE COMMUNICATIONS SYSTEM**

(75) Inventors: **Sung Jun Park**, Gyeonggi-do (KR); **Young Dae Lee**, Gyeonggi-do (KR); **Sung Duck Chun**, Gyeonggi-do (KR); **Myung Cheul Jung**, Seoul (KR)

(73) Assignee: **LG Electronics Inc.**, Seoul (KR)

(*) Notice: Subject to any disclaimer, the term of this patent is extended or adjusted under 35 U.S.C. 154(b) by 324 days.

(21) Appl. No.: **11/553,939**

(22) Filed: **Oct. 27, 2006**

(65) **Prior Publication Data**

US 2007/0047493 A1 Mar. 1, 2007

Related U.S. Application Data

(60) Provisional application No. 60/732,080, filed on Oct. 31, 2005.

(30) **Foreign Application Priority Data**

Jul. 5, 2006 (KR) 10-2006-0063135

(51) **Int. Cl.**
H04W 36/00 (2009.01)

(52) **U.S. Cl.** **455/436**; 370/338; 370/349; 455/552

(58) **Field of Classification Search** 455/552, 455/450, 452, 458, 435, 436, 509; 370/338, 370/349, 329, 328, 466, 469, 335
See application file for complete search history.

(56) **References Cited**

U.S. PATENT DOCUMENTS

6,359,867 B1 3/2002 Ali-Vehmas
6,628,946 B1 9/2003 Wiberg et al.
6,968,192 B2 11/2005 Longoni
2001/0016496 A1 8/2001 Lee
2001/0030956 A1 10/2001 Chillariga et al.
2002/0048266 A1 * 4/2002 Choi et al. 370/331

(Continued)

FOREIGN PATENT DOCUMENTS

EP 1505782 2/2005

(Continued)

OTHER PUBLICATIONS

Onoe et al., "Control Channel Structure for TDMA Mobile Radio Systems,"40th IEEE Vehicular Technology Conference, May 6-9, 1990, Orlando (US), pp. 270-275.

Primary Examiner—Vincent P Harper
Assistant Examiner—Mahendra Patel
(74) *Attorney, Agent, or Firm*—Lee, Hong, Degerman, Kang & Waimey

(57) **ABSTRACT**

In a wireless mobile communications system, a method of transmitting and receiving radio access information that allows a faster and an efficient way of establishing a radio connection between a terminal and a target base station while performing a handover for the terminal to a cell of the target base station. The network transmits in advance, the radio access information and the like, to the terminal so that the terminal can be connected with the target cell in a faster manner which minimizes the total time for the handover process.

26 Claims, 7 Drawing Sheets

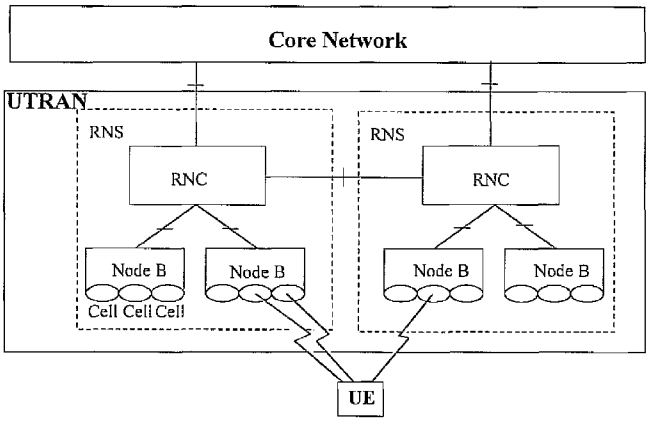

U.S. PATENT DOCUMENTS

2002/0052206	A1	5/2002	Longoni	
2002/0181436	A1	12/2002	Mueckenheim et al.	
2003/0026324	A1 *	2/2003	Li et al.	375/141
2003/0054829	A1	3/2003	Moisio	
2003/0076812	A1 *	4/2003	Benedittis	370/350
2003/0081586	A1 *	5/2003	Malladi et al.	
2003/0095552	A1	5/2003	Bernhard et al.	
2003/0131300	A1	7/2003	Park et al.	
2004/0022217	A1 *	2/2004	Korpela et al.	370/335
2004/0029532	A1 *	2/2004	Schwarz et al.	455/63.1
2004/0053614	A1 *	3/2004	Il-Gyu et al.	455/436
2004/0085926	A1 *	5/2004	Hwang et al.	370/328
2004/0162072	A1	8/2004	Sigle et al.	
2005/0059437	A1 *	3/2005	Son et al.	455/574
2005/0094586	A1	5/2005	Zhang et al.	
2005/0138528	A1	6/2005	Ameigeiras et al.	
2005/0159161	A1	7/2005	Florkey et al.	
2005/0177623	A1	8/2005	Roberts et al.	
2006/0039327	A1 *	2/2006	Samuel et al.	370/331
2007/0032255	A1 *	2/2007	Koo et al.	455/512

FOREIGN PATENT DOCUMENTS

EP	1565026		8/2005
JP	2004-208177		7/2004
JP	2004208177		7/2004
KR	10-2003-0007481		1/2003
KR	10-2003-0056143		7/2003
KR	10-2003-0080946		10/2003
KR	10-2005-0032285		4/2005
KR	10-2005-0032949		4/2005
KR	10-2005-0078635		8/2005
KR	10-2005-0084908		8/2005
KR	10-0688303		3/2007
RU	2193281		11/2002
TW	236241		7/2005
WO	01/35586		5/2001
WO	03017544		2/2003
WO	WO 03/017544	A1	2/2003
WO	03/096149		11/2003
WO	2005/011134	*	2/2005
WO	2005/083912	*	9/2005

* cited by examiner

Fig 1

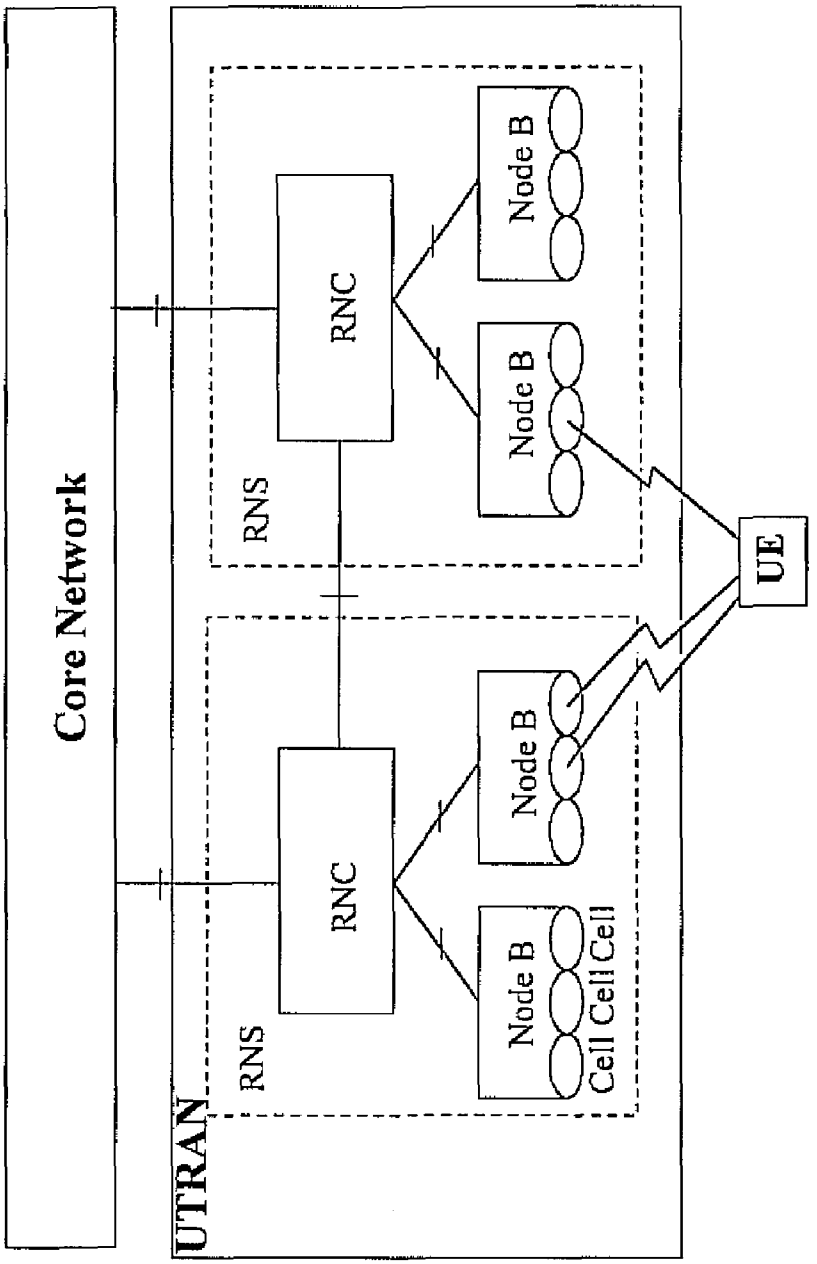
Core Network
UTRAN
RNS
RNC
Node B
Node B
RNS
RNC
Node B
Node B
Cell Cell Cell
UE

Fig 2

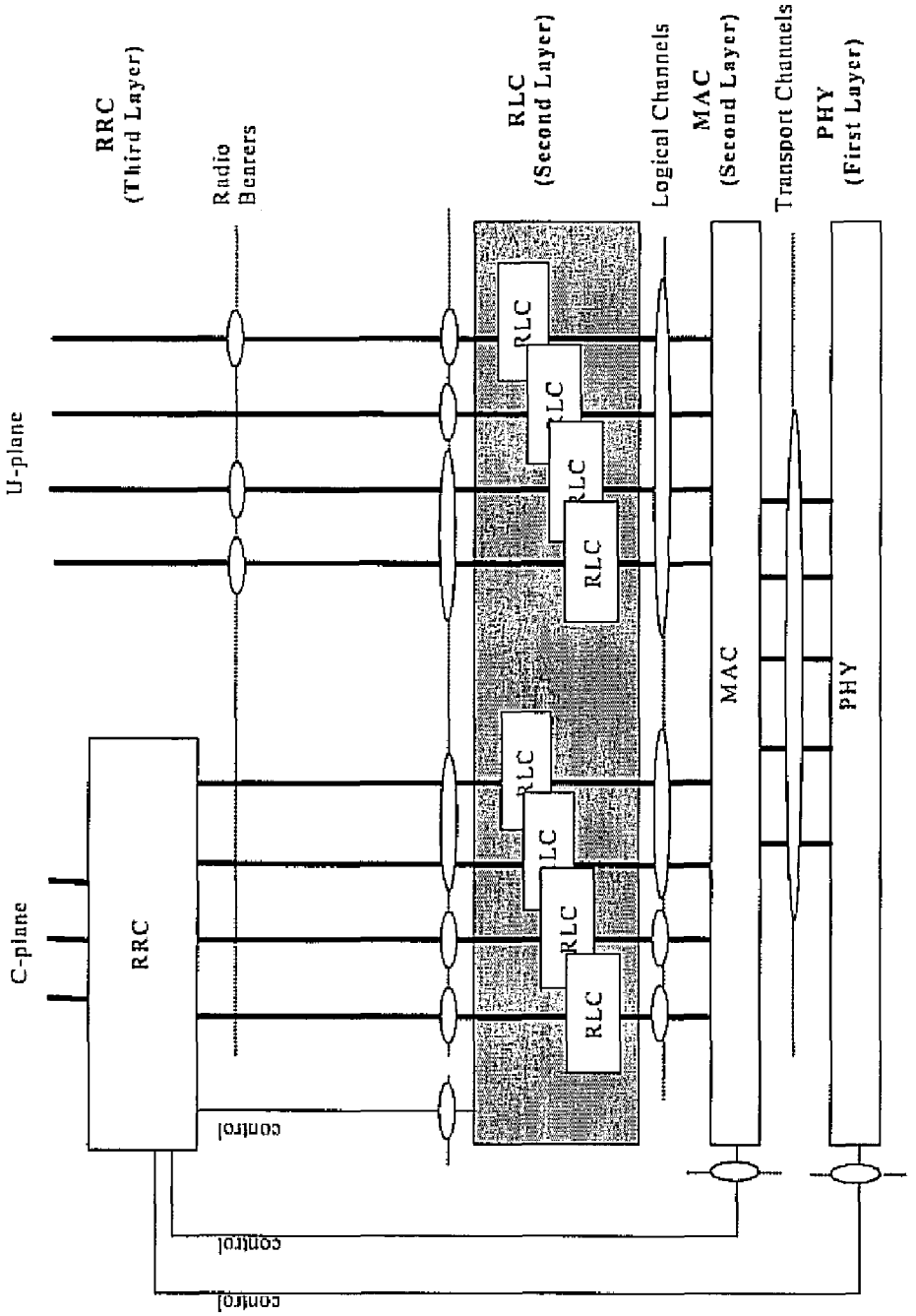
RRC
(Third Layer)
Radio
Bearers
RLC
(Second Layer)
Logical Channels
MAC
(Second Layer)
Transport Channels
PHY
(First Layer)
U-plane
C-plane
RRC
RLC
RLC
RLC
RLC
RLC
RLC
RLC
RLC
MAC
PHY
control
control
control

Fig 3

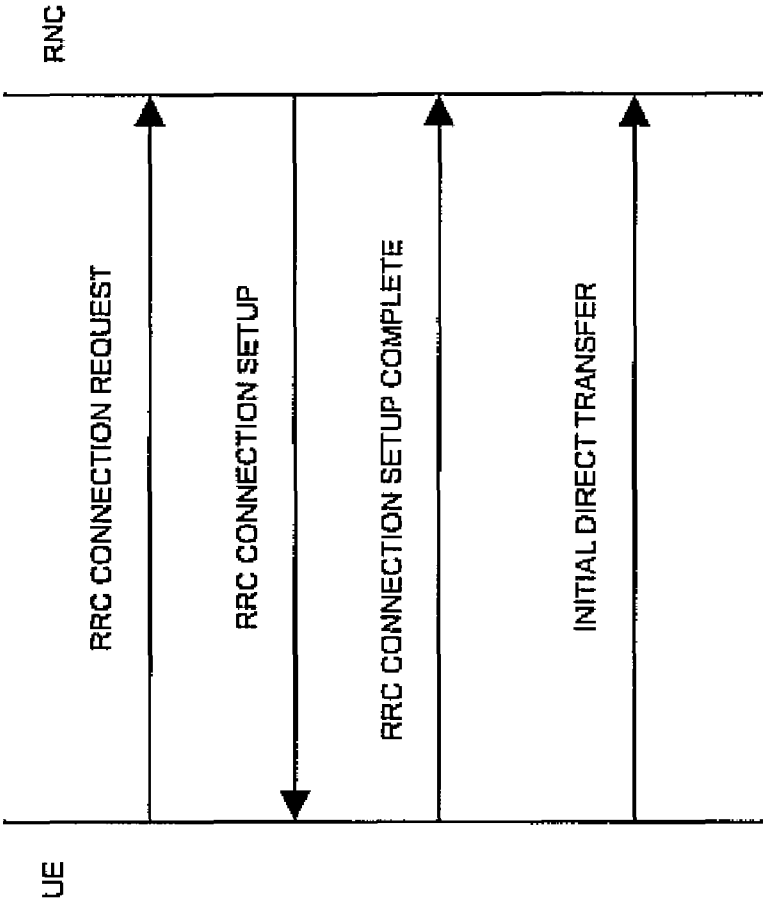
UE
RRC CONNECTION REQUEST
RRC CONNECTION SETUP
RRC CONNECTION SETUP COMPLETE
INITIAL DIRECT TRANSFER
RNC

Fig 5

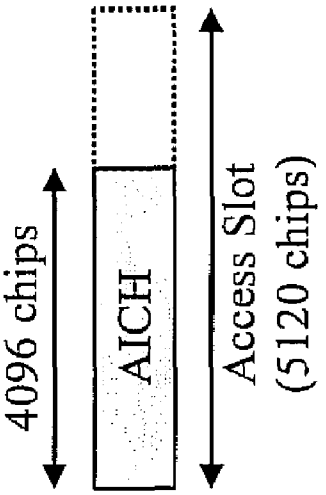
4096 chips
AICH
Access Slot
(5120 chips)

Fig 4

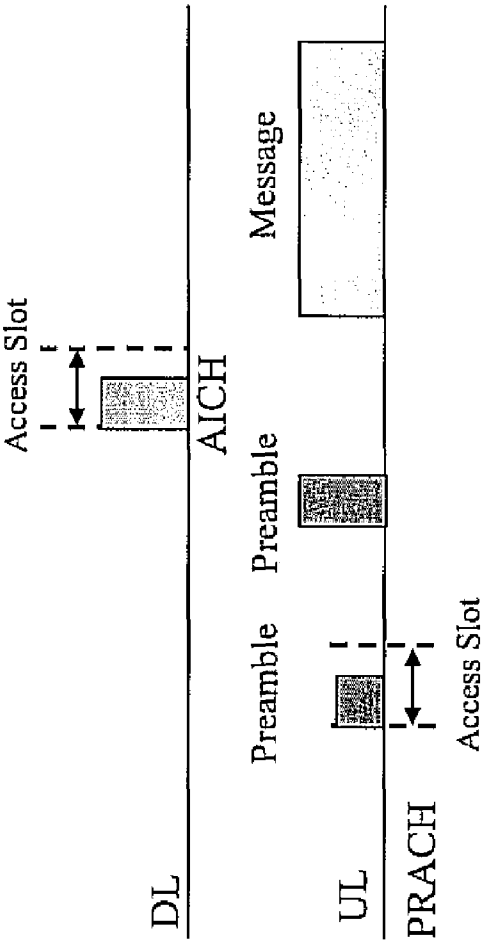
Access Slot
AICH
Message
Preamble
Preamble
Access Slot
DL
UL
PRACH

Fig 6

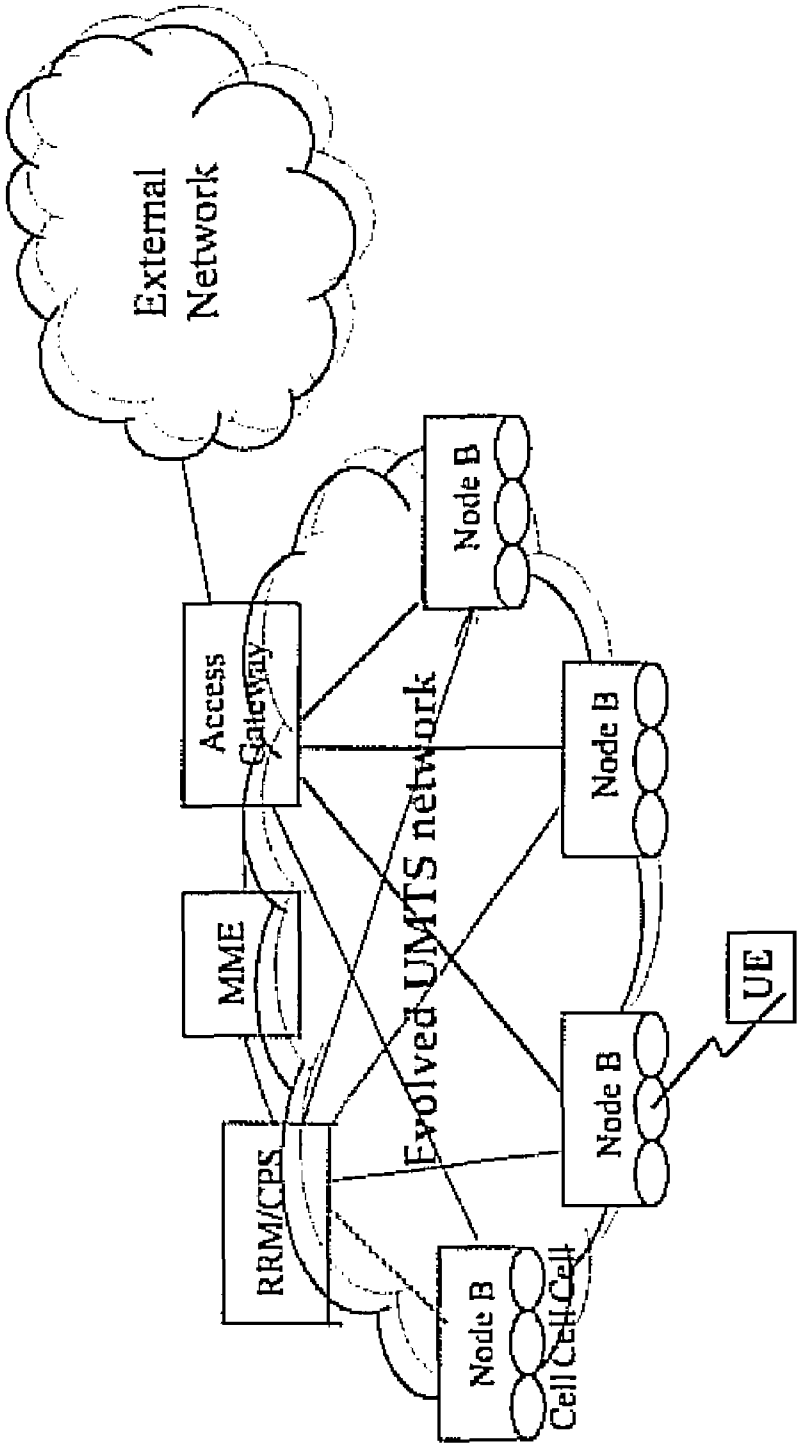
External Network
Access Gateway
MME
RRM/CPS
Evolved UMTS network
Node B
Node B
Node B
Node B
Cell Cell Cell
UE

Fig 8

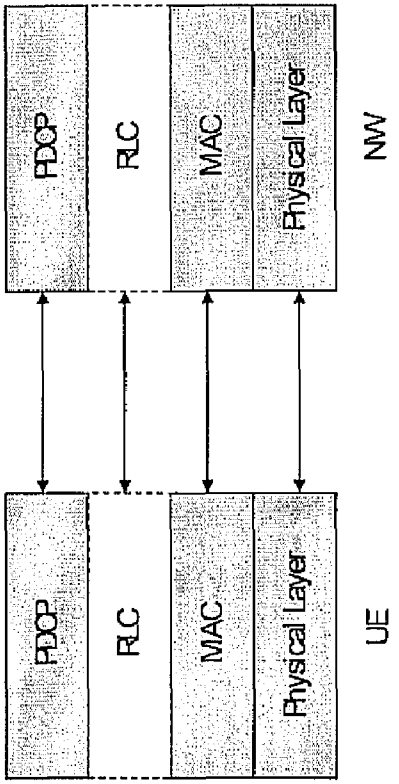
PDCP
RLC
MAC
Physical Layer
UE
PDCP
RLC
MAC
Physical Layer
NW

Fig 7

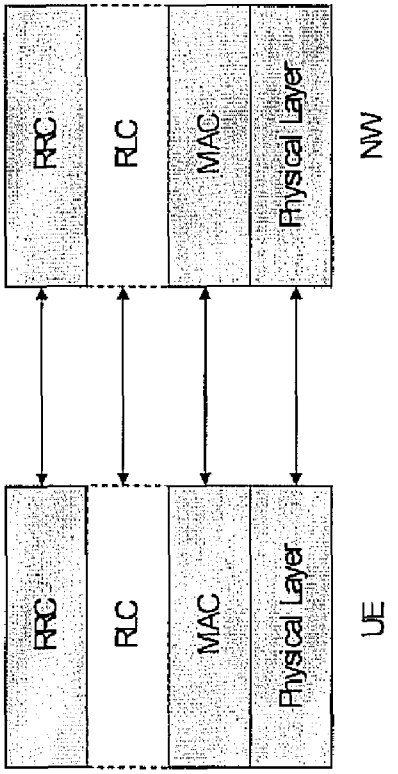
RRC
RLC
MAC
Physical Layer
UE
RRC
RLC
MAC
Physical Layer
NW

Fig 9

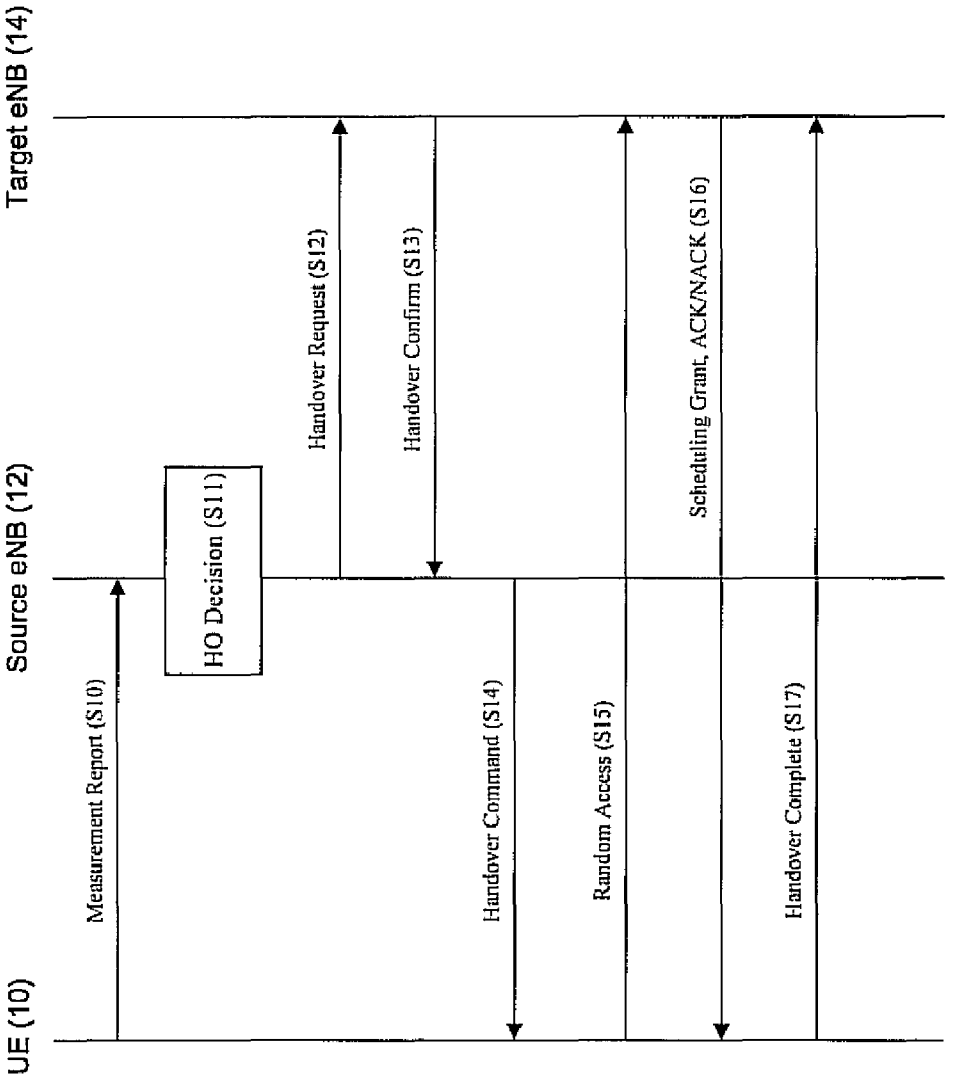
UE (10)
Source eNB (12)
Target eNB (14)
Measurement Report (S10)
HO Decision (S11)
Handover Request (S12)
Handover Confirm (S13)
Handover Command (S14)
Random Access (S15)
Scheduling Grant, ACK/NACK (S16)
Handover Complete (S17)

METHOD OF TRANSMITTING AND RECEIVING RADIO ACCESS INFORMATION IN A WIRELESS MOBILE COMMUNICATIONS SYSTEM

CROSS REFERENCE TO RELATED APPLICATION

Pursuant to 35 U.S.C. §119, this application claims the benefit of earlier filing date and right of priority to U.S. Provisional Application No. 60/732,080, filed Oct. 31, 2005, and Korean Patent Application No. 10-2006-0063135, filed Jul. 5, 2006, the contents of which are hereby incorporated by reference herein in their entirety.

FIELD OF THE INVENTION

The present invention relates to wireless (radio) mobile communications systems, and in particular, relates to a method of transmitting and receiving radio connection information that allows a terminal to access a target base station (i.e., target eNB) in a faster and more efficient manner while performing a handover for the terminal to a cell of the target base station.

BACKGROUND ART

The universal mobile telecommunications system (UMTS) is a third-generation mobile communications system evolving from the global system for mobile communications system (GSM), which is the European standard. The UMTS is aimed at providing enhanced mobile communications services based on the GSM core network and wideband code-division multiple-access (W-CDMA) technologies.

FIG. **1** shows an exemplary diagram illustrating an Universal Mobile Telecommunication System (UMTS) network of a conventional mobile communication system. The UMTS is comprised of, largely, a user equipment (UE) or terminal, a UMTS Terrestrial Radio Access Network (UTRAN), and a core network (CN). The UTRAN comprises at least one Radio Network Sub-system (RNS), and each RNS is comprised of one Radio Network Controller (RNC) and at least one base station (Node B) which is controlled by the RNC. For each Node B, there is at least one cell.

FIG. **2** is an exemplary diagram illustrating a structure of a Radio Interface Protocol (RIP) between a UE and the UTRAN. Here, the UE is associated with a 3rd Generation Partnership Project (3GPP) wireless access network standard. The structure of the RIP is comprised of a physical layer, a data link layer, and a network layer on the horizontal layers. On the vertical plane, the structure of the RIP is comprised of a user plane, which is used for transmitting data, and a control plane, which is used for transmitting control signals. The protocol layers of FIG. **2** can be categorized as L1 (first layer), L2 (second layer), and L3 (third layer) based on an Open System Interconnection (OSI) model. Each layer will be described in more detail as follows. The first layer (L1), namely, the physical layer, provides an upper layer with an information transfer service using a physical channel. The physical layer is connected to an upper layer called a medium access control (MAC) layer through a transport channel. Data is transferred between the MAC layer and the physical layer through the transport channel. Data is also transferred between different physical layers, i.e. between physical layers of a transmitting side and a receiving side, through the physical channel.

The MAC layer of the second layer (L2) provides an upper layer called a radio link control (RLC) layer with a service through a logical channel. The RLC layer of the second layer supports reliable data transfer and performs segmentation and concatenation of a service data unit (SDU) received from an upper layer.

A radio resource control (RRC) layer at a lower portion of the L3 layer is defined in the control plane and controls logical channels, transport channels, and physical channels for configuration, re-configuration and release of radio bearers (RBs). A RB is a service provided by the second layer for data transfer between the terminal and the UTRAN. The configuration of the RBs includes defining characteristics of protocol layers and channels required to provide a specific service, and configuring respective specific parameters and operation methods.

A RRC connection and a signaling connection will be described in more detail as follows.

In order to perform communications, a terminal needs to have a RRC connection with the UTRAN and a signaling connection with the Core Network (CN). The terminal transmits and/or receives a terminal's control information with the UTRAN or the CN via the RRC connection and the signaling connection.

FIG. **3** shows an exemplary diagram for explaining how a RRC connection is established.

In FIG. **3**, to establish the RRC connection, the terminal transmits a RRC Connection Request Message to the RNC, and then the RNC transmits a RRC Connection Setup Message to the terminal in response to the RRC Connection Request Message. After receiving the RRC Connection Setup Message by the terminal, the terminal transmits a RRC Connection Setup Complete Message to the RNC. If the above steps are successfully completed, the terminal establishes the RRC connection with the RNC. After the RRC connection is established, the terminal transmits an Initial Direct Transfer (IDT) message to the RNC for initializing a process of the signaling connection.

A Random Access Channel of a WCDMA will be described in more detail as follows.

The Random Access Channel (RACH) is used to transfer a short length data on an uplink, and some of the RRC message (i.e., RRC Connection Request Message, Cell Update Message, URA Update Message) is transmitted via the RACH. The RACH is mapped to a Common Control Channel (CCCH), a Dedicated Control Channel (DCCH) and a Dedicated Traffic Channel (DTCH), and then the RACH is mapped to a Physical Random Access Channel.

FIG. **4** shows how the physical random access channel (PRACH) power ramping and message transmission may be performed.

Referring to FIG. **4**, the PRACH, which is an uplink physical channel, is divided into a preamble part and a message part. The preamble part is used to properly control a transmission power for a message transmission (i.e., a power ramping function] and is used to avoid a collision between multiple terminals. The message part is used to transmit a MAC PDU that was transferred from the MAC to the Physical channel.

When the MAC of the terminal instructs a PRACH transmission to the physical layer of the terminal, the physical layer of the terminal first selects one access slot and one (preamble) signature, and transmits the preamble on the PRACH to an uplink. Here, the preamble is transmitted within a particular the length of access slot duration (e.g., 1.33

ms). One signature is selected among the 16 different signatures within a first certain length of the access slot, and it is transmitted.

If the preamble is transmitted from the terminal, a base station transmits a response signal via an Acquisition indicator channel (AICH) which is a downlink physical channel. The AICH, in response to the preamble, transmits a signature that was selected within the first certain length of the access slot. Here, the base station transmits an ACK response or a NACK response to the terminal by means of the transmitted signature from the AICH.

If the ACK response is received, the terminal transmits a 10 ms or 20 ms length of the message part using an OVSF code that correspond with the transmitted signature. If the NACK response is received, the MAC of the terminal instructs the PRACH transmission again to the physical layer of the terminal after a certain time period. Also, if no AICH is received with respect to the transmitted preamble, the terminal transmits a new preamble with a higher power compared to that used for the previous preamble after a predetermined access slot.

FIG. **5** illustrates an exemplary structure of an Acquisition Indicator Channel (AICH).

As shown in FIG. **5**, the AICH, which is a downlink physical channel, transmits 16 symbol signatures (Si, i=0, . . . 15) for the access slot having a length of 5120 chips. The terminal may select any arbitrary signature (Si) from **S0** signature to **S15** signature, and then transmits the selected signature during the first 4096 chips length. The remaining 1024 chips length is set as a transmission power off period during which no symbol is transmitted. Also, as similar to FIG. **51** the preamble part of the uplink PRACH transmits 16 symbol signatures (Si, i=0, . . . , 15) during the first 4096 chips length.

An Evolved Universal Mobil Telecommunication System (E-UMTS) will be described in more detail as follows.

FIG. **6** shows an exemplary structure of an Evolved Universal Mobile Telecommunications System (E-UMTS). The E-UMTS system is a system that has evolved from the UMTS system, and its standardization work is currently being performed by the 3GPP standards organization.

The E-UMTS network generally comprises at least one mobile terminal (i.e., user equipment: UE), base stations (i.e., Node Bs), a control plane server (CPS) that performs radio (wireless) control functions, a radio resource management (RRM) entity that performs radio resource management functions, a mobility management entity (MME) that performs mobility management functions for a mobile terminal, and an access gateway (AG) that is located at an end of the E-UMTS network and connects with one or more external networks. Here, it can be understood that the particular names of the various network entities are not limited to those mentioned above.

The various layers of the radio interface protocol between the mobile terminal and the network may be divided into L1 (Layer 1), L2 (Layer 2), and L3 (Layer 3) based upon the lower three layers of the Open System Interconnection (OSI) standard model that is known the field of communication systems. Among these layers, a physical layer that is part of Layer 1 provides an information transfer service using a physical channel, while a Radio Resource Control (RRC) layer located in Layer 3 performs the function of controlling radio resources between the mobile terminal and the network. To do so, the RRC layer exchanges RRC messages between the mobile terminal and the network. The functions of the RRC layer may be distributed among and performed within the Node B, the CPS/RRM and/or the MME.

FIG. **7** shows an exemplary architecture of the radio interface protocol between the mobile terminal and the UTRAN (UMTS Terrestrial Radio Access Network). The radio interface protocol of FIG. **7** is horizontally comprised of a physical layer, a data link layer, and a network layer, and vertically comprised of a user plane for transmitting user data and a control plane for transferring control signaling. The radio interface protocol layer of FIG. **2** may be divided into L1 (Layer 1), L2 (Layer 2), and L3 (Layer 3) based upon the lower three layers of the Open System Interconnection (OSI) standards model that is known the field of communication systems.

Particular layers of the radio protocol control plane of FIG. **7** and of the radio protocol user plane of FIG. **8** will be described below. The physical layer (i.e., Layer 1) uses a physical channel to provide an information transfer service to a higher layer. The physical layer is connected with a medium access control (MAC) layer located thereabove via a transport channel, and data is transferred between the physical layer and the MAC layer via the transport channel. Also, between respectively different physical layers, namely, between the respective physical layers of the transmitting side (transmitter) and the receiving side (receiver), data is transferred via a physical channel.

The MAC layer of Layer 2 provides services to a radio link control (RLC) layer (which is a higher layer) via a logical channel. The RLC layer of Layer 2 supports the transmission of data with reliability. It should be noted that the RLC layer in FIG. **7** is depicted in dotted lines, because if the RLC functions are implemented in and performed by the MAC layer, the RLC layer itself may not need to exist. The PDCP layer of Layer 2 performs a header compression function that reduces unnecessary control information such that data being transmitted by employing Internet protocol (IP) packets, such as IPv4 or IPv6, can be efficiently sent over a radio (wireless) interface that has a relatively small bandwidth.

The radio resource control (RRC) layer located at the lowermost portion of Layer 3 is only defined in the control plane, and handles the control of logical channels, transport channels, and physical channels with respect to the configuration, re-configuration and release of radio bearers (RB). Here, the RB refers to a service that is provided by Layer 2 for data transfer between the mobile terminal and the UTRAN.

As for channels used in downlink transmission for transmitting data from the network to the mobile terminal, there is a broadcast channel (BCH) used for transmitting system information, and a shared channel (SCH) used for transmitting user traffic or control messages. Also, as a downlink transport channel, there is a downlink Shared Control Channel (SCCH) that transmits necessary control information for the terminal to receive the downlink SCH. The downlink SCCH transmission includes information regarding a data variation, a data channel coding technique, and a data size where the data is transmitted to the downlink SCH.

As for channels used in uplink transmission for transmitting data from the mobile terminal to the network, there is a random access channel (RACH) used for transmitting an initial control message, and a shared channel (SCH) used for transmitting user traffic or control messages. Also, in an uplink transport channel, there is an uplink Shared Control Channel (SCCH) that transmits necessary control information for the terminal to receive the uplink SCH. The uplink SCCH transmission includes information regarding a data variation, a data channel coding technique, and a data size where the data is transmitted to the uplink SCH.

In the related art, when the mobile terminal moves from a source cell to a target cell, the mobile terminal uses a RACH

to transmit a cell update message to the target cell. Namely, in order to transmit the cell update message, the terminal uses the RACH for an uplink time synchronization with the target cell and for an uplink resource allocation. However, due to a collision possibility of the RACH, the message transmission my be delayed, and a handover processing time is increased because of the possibility of RACH collision.

SUMMARY

The present invention has been developed in order to solve the above described problems of the related art. As a result, the present invention provides a method of transmitting and receiving control radio connection information that allows a faster and an efficient way of accessing a terminal to a target base station while performing a handover for the terminal to a cell of the target base station.

BRIEF DESCRIPTION OF THE DRAWINGS

FIG. **1** shows an exemplary diagram illustrating an Universal Mobile Telecommunication System (UMTS) network of a conventional mobile communication system.

FIG. **2** shows an exemplary diagram illustrating a structure of a Radio Interface Protocol (RIP) between a UE and the UTRAN.

FIG. **3** shows an exemplary diagram for explaining how a RRC connection is established.

FIG. **4** shows how the physical random access channel (PRACH) power ramping and message transmission may be performed.

FIG. **5** illustrates an exemplary structure of an Acquisition Indicator Channel (AICH).

FIG. **6** shows an overview of an E-UMTS network architecture.

FIGS. **7** and **8** show an exemplary structure (architecture) of a radio interface protocol between a mobile terminal and a UTRAN according to the 3GPP radio access network standard.

FIG. **9** shows an exemplary diagram for transmitting and receiving radio connection information according to an exemplary embodiment of the present invention.

DESCRIPTION

One aspect of the present invention is the recognition by the present inventors regarding the problems and drawbacks of the related art described above and explained in more detail hereafter. Based upon such recognition, the features of the present invention have been developed.

In the related art, when the mobile terminal moves from a source cell to a target cell, the mobile terminal uses a RACH to transmit a cell update message to the target cell. However, because of a possibility for a RACH collision (i.e. the same signature is being selected from multiple terminals that use of the RACH), the processing time for the handover process may be delayed.

In contrast, the features of the present invention provide that the terminal receives necessary information from a source cell in advance (i.e., before the terminal transmits a RACH setup request to a network) in order to utilize the RACH in a later step. As a result, the terminal can connect with the target cell with minimal delays.

It should be noted that the features of the present invention may be related to issues regarding the long-term evolution (LTE) of the 3GPP standard. As such, the 3GPP standard and its related sections or portions thereof, as well as various developing enhancements thereof pertain to the present invention. For example, in present invention, a source enhanced Node B (eNB) may manage the source cell described above and a target enhanced Node B (eNB) may manage the target cell.

FIG. **9** shows an exemplary diagram for transmitting and receiving radio connection information according to an exemplary embodiment of the present invention.

As illustrated in FIG. **9**, the UE (or terminal) (**10**) may transmit a measurement report to the source eNB (**12**) by measuring a condition of a downlink physical channel for other cells periodically or upon the occurrence of event (i.e., user command, setting information, etc) (S**10**). As the measurement report is transmitted to the source eNB with a result for the measured condition of the downlink physical channel for other cells, the eNB may determine which cell, that the UE will be moved to, has a better channel condition compared to the current cell.

Using the measurement report which contains information about the condition of the downlink physical channel for other cells, the source eNB (**12**) may determine whether to perform a handover for the UE (**10**) from a current cell to the other cell, or whether to keep the UE in current cell (S**11**).

If the UE (**10**) needs to perform handover from the source eNB to an other particular cell, the source eNB (**12**) may transmit a handover request message to the target eNB (**14**) in order to request a handover for the UE to the target eNB. (S**12**) Here, the handover request message may include a UE identification (ID) and/or a buffer state of the UE.

If the target eNB (**14**) allows the handover to be performed for the UE upon receiving the handover request from the source eNB (**12**); the target eNB (**14**) may transmit a handover confirm message to the source eNB (**12**) (S**13**). The handover confirm message may include information that may be necessary in the course of connecting the UE (**10**) to the target cell. Namely, the necessary information may include information used in the RACH which is used for performing a radio access procedure from the UE to the target eNB. For example, when the RACH is being used while the UE accesses to the target eNB, the UE may utilize a preamble which is selected from signatures contained in the UE. System information transmitted from the eNB may include signatures related information. So, the UE may transmit the preamble to the eNB after selecting one of the signatures. However, in some cases, one or more UEs could select a same signature because there are a limited number of signatures. Therefore, if two or more UEs transmit the preamble of the same signature to the eNB at the same time, the eNB can not possibly determine which UE transmitted such preamble. To avoid this from happening, the UE should not transmit a preamble that is selected from the signatures used in the RACH during the handover; but rather, the UE may transmit a preamble of a previously defined signature through the handover confirm message from the target eNB. Here, the target eNB may acknowledge the mapping relationship between an UE's ID and the signature, where the UE's ID is transmitted from the Handover Request Message. Therefore, when the UE transmits the preamble to the target eNB for establishing a radio connection to the target cell, the target eNB may determine an ID of the UE using the preamble. Also, the Handover Confirm message may include a transmission characteristic of the preamble that is transmitted from the UE (**10**) to the target eNB (**14**). The transmission characteristic may relate to frequency and time used in transmitting the preamble information.

If the source eNB (**12**) receives the Handover confirm message of the UE from the target eNB (**14**), the source eNB

(**12**) may transmit a Handover Command message to the UE (**10**). (S**14**) The Handover Command message may include necessary information which comes from the target eNB, for establishing the radio connection to the target eNB. Also, the Handover Command message may include information of the signature and the preamble which is to be used in the access procedure to the target eNB.

The UE (**10**), which received the handover command message from the source eNB (**12**), may utilize the RACH for establishing the radio connection between the UE and the target eNB. (S**15**) Here, the preamble transmission of the UE is based upon information in the handover command message received from the source eNB (**12**). Also, if the information includes system information of the target eNB (**14**), the UE (**10**) may perform a radio accessing procedure without reading broadcast system information from the target eNB (**14**). For example, when the UE performs to establish the radio connection with a new cell, the UE usually reads system information of the corresponding eNB after time synchronization of the downlink. Since the system information includes information related to a radio access request message from the UE to an uplink, the radio accessing is performed after reading the system information. However, according to the present invention, the UE (**10**) may perform the radio access procedure without reading the system information in the target cell, as the system information of the target eNB is previously transmitted to the source eNB in advance and the system information was included in the handover command message.

The target eNB (**14**) may receive the preamble of the UE. Since the target eNB (**14**) already allocates a signature used in the preamble to the UE in the use of handover, the UE can be identified by the preamble. The target eNB (**14**) may allocate the uplink radio resource to the UE (**10**) for the UE to access the target eNB and to transmit the handover complete message to the target eNB. (S**16**) Also, the allocated radio resources information may be transmitted to the UE (**10**) via a downlink SCH. Alternatively, the allocated radio resources information may be transmitted via a downlink SCCH. Further, the allocated radio resources may be transmitted within an ACK/NACK signaling.

The UE (**10**) may transmit the handover complete message to the target eNB (**14**) based on a scheduling grant of the target eNB. (S**17**) If the scheduling grant includes information of allocated radio resources upon an allocation request of the uplink radio resources of the UE, the scheduling grant may be transmitted with the ACK/NACK signaling of the preamble transmitted from the UE (**10**). In this case, the Handover complete message from the UE may include a buffer state of the UE or its related information. If the allocated uplink radio resources, which is transmitted from the target eNB (**14**) to the UE (**10**), is sufficient, the handover complete message may be transmitted with additional traffic data when there is additional uplink traffic data.

It can be said that the present invention provides a method of transmitting access information in a mobile communications system, the method comprising: deciding to perform a handover for a terminal to a cell of a target base station; transmitting, to the target base station, a handover request for performing a handover from a source base station to the target base station; receiving access information from the target base station that received the handover request, wherein the access information is then transmitted to the terminal to access the target base station; receiving a measurement report from the terminal; determining whether to perform a handover based upon the received measurement report; and transmitting a handover command that contains the access information to the terminal upon receiving the response by the source base station, wherein the measurement report includes a downlink physical channel condition for multiple cells including the cell of the target base station, the handover request includes at least one of terminal identification (ID) information and/or buffer state information of the terminal, the access information is random access information, the access information is for a random access channel (RACH), the access information includes at least one of signature information and/or preamble information, the signature information is determined by the target base station based upon terminal identification information, the preamble information includes frequency information and time information, and the handover command includes access information which contains at least one of signature information and/or preamble information to allow the terminal to access the target base station.

Also, the present invention may provide a method of transmitting access information in a mobile communications system, the method comprising: receiving, from a source base station, a handover request for performing a handover from the source base station to a target base station; transmitting access information to the source base station upon receiving the handover request, wherein the access information is used to allow a terminal to access the target base station; allocating a radio resource for an uplink and transmitting radio resource allocation information to the terminal; receiving, from the terminal, preamble information of the terminal; and receiving a handover complete message from the terminal, wherein the radio resource allocation information is transmitted to the terminal through at least one of a downlink shared channel (SCH) and a downlink shared control channel (SCCH), an ACK/NACK signal includes the allocated resource information, the preamble information is used to identify the terminal, the handover complete message includes at least one of buffer state information of the terminal and uplink traffic data, and the handover complete message includes uplink traffic data if the radio resource allocation for the uplink is sufficient to transmit the uplink traffic data.

It can be said that the present invention provides a method of receiving access information in mobile communications system, the method comprising: receiving access information from a source base station after a handover is accepted by a target base station; performing a random access procedure with the target base station using the received access information; transmitting a measurement report to the source base station by measuring a condition of a downlink physical channel for other cells, the measuring performed periodically or upon an occurrence of an event; transmitting the preamble information to the target base station for performing a radio access procedure with the target cell; receiving, from a network, radio resource information through a downlink shared channel (SCCH); receiving, from a network, radio resource information within an ACK/NACK signaling; and transmitting a handover complete message to the target base station, wherein the measurement report is used to determine whether to perform a handover from a current cell to an other cell, the access information is random access information for a random access channel (RACH) which includes preamble information within signature information, the access information includes a transmission characteristic of the preamble information, the transmission characteristic relates to frequency and time used in transmitting the preamble information, the access information includes system information transmitted from the target base station, and the handover complete message includes at least one of buffer state information of the terminal and uplink traffic data.

The present invention also may provide a mobile terminal for establishing a radio connection to a target base station in a mobile communications system, the mobile terminal comprising: a radio protocol adapted to receive access information from a source base station after a handover is accepted by the target base station and to perform a random access procedure with the target base station using the received access information, wherein the source base station is a source enhanced Node B (source eNB) and the target base station is a target enhanced Node B (target eNB) respectively in an Evolved Universal Mobile Telecommunication System (E-UMTS).

Although the present invention is described in the context of mobile communications, the present invention may also be used in any wireless communication systems using mobile devices, such as PDAs and laptop computers equipped with wireless communication capabilities (i.e. interface). Moreover, the use of certain terms to describe the present invention should not limit the scope of the present invention to a certain type of wireless communication system. the present invention is also applicable to other wireless communication systems using different air interfaces and/or physical layers, for example, TDMA, CDMA, FDMA, WCDMA, OFDM, EV-DO, Mobile Wi-Max, Wi-Bro, etc.

The preferred embodiments may be implemented as a method, apparatus or article of manufacture using standard programming and/or engineering techniques to produce software, firmware, hardware, or any combination thereof. The term "article of manufacture" as used herein refers to code or logic implemented in hardware logic (e.g., an integrated circuit chip, Field Programmable Gate Array (FPGA), Application Specific Integrated Circuit (ASIC), etc.) or a computer readable medium (e.g., magnetic storage medium (e.g., hard disk drives, floppy disks, tape, etc.), optical storage (CD-ROMs, optical disks, etc.), volatile and non-volatile memory devices (e.g., EEPROMs, ROMs, PROMs, RAMs, DRAMs, SRAMs, firmware, programmable logic, etc).

Code in the computer readable medium is accessed and executed by a processor. The code in which preferred embodiments are implemented may further be accessible through a transmission media or from a file server over a network. In such cases, the article of manufacture in which the code is implemented may comprise a transmission media, such as a network transmission line, wireless transmission media, signals propagating through space, radio waves, infrared signals, etc. Of course, those skilled in the art will recognize that many modifications may be made to this configuration without departing from the scope of the present invention, and that the article of manufacture may comprise any information bearing medium known in the art.

This specification describes various illustrative embodiments of the present invention. The scope of the claims is intended to cover various modifications and equivalent arrangements of the illustrative embodiments disclosed in the specification. Therefore, the following claims should be accorded the reasonably broadest interpretation to cover modifications, equivalent structures, and features that are consistent with the spirit and scope of the invention disclosed herein.

The invention claimed is:

1. A method of transmitting access information in a mobile communications system, the method comprising:

deciding to perform a handover for a terminal to a cell of a target base station;

transmitting, from a source base station to the target base station, a handover request for performing a handover of the terminal from the source base station to the target base station;

receiving, at the source base station, access information from the target base station that received the handover request, wherein the receiving of the access information occurs after the transmitting of the handover request; and

transmitting, from the source base station to the terminal, the access information being configured to permit the terminal to access the target base station;

wherein the access information includes preamble information for a random access procedure,

wherein the preamble information is a dedicated preamble used only for a specific terminal, and

wherein the dedicated preamble is determined by the target base station.

2. The method of claim **1**, further comprising:

receiving a measurement report from the terminal.

3. The method of claim **2**, wherein the measurement report includes a downlink physical channel condition for multiple cells including the cell of the target base station.

4. The method of claim **3**, further comprising:

determining whether to perform a handover based upon the received measurement report.

5. The method of claim **1**, wherein the access information is for a random access channel (RACH).

6. The method of claim **1**, wherein the preamble information includes frequency information and time information.

7. The method of claim **1**, further comprising: transmitting a handover command that contains the access information to the terminal upon receiving the access information by the source base station.

8. A method of transmitting access information in a mobile communications system, the method comprising:

receiving, at a target base station from a source base station, a handover request for performing a handover of a terminal from the source base station to the target base station; and

transmitting, from the target base station to the source base station, access information upon receiving the handover request, wherein the access information is used to allow the terminal to access the target base station,

wherein the access information includes preamble information for a random access procedure,

wherein the preamble information is a dedicated preamble used only for a specific terminal, and

wherein the dedicated preamble is determined by the target base station.

9. The method of claim **8**, further comprising: allocating a radio resource for an uplink and transmitting radio resource allocation information to the terminal.

10. The method of claim **9**, wherein the radio resource allocation information transmits to the terminal through at least one of a downlink shared channel (SCH) and a downlink shared control channel (SCCH).

11. The method of claim **10**, wherein an ACK/NACK signal includes the allocated resource information.

12. The method of claim **8**, wherein the preamble information is used to identify the terminal.

13. The method of claim **8**, further comprising:

receiving a handover complete message from the terminal.

14. The method of claim **13**, wherein the handover complete message includes uplink traffic data if the radio resource allocation for the uplink is sufficient to transmit the uplink traffic data.

15. A method of receiving access information in a mobile communications system, the method comprising:

receiving access information from a source base station after a handover request is accepted by a target base station,

wherein the access information includes preamble information for a random access procedure,

wherein the preamble information is a dedicated preamble used only for a specific terminal, and

wherein the dedicated preamble is determined by the target base station; and

performing the random access procedure with the target base station using the received access information, such that the access information is configured to permit the terminal to access the target base station.

16. The method of claim **15**, further comprising:

transmitting a measurement report to the source base station by measuring a condition of a downlink physical channel for other cells, the measuring performed periodically or upon an occurrence of an event.

17. The method of claim **16**, wherein the measurement report is used to determine whether to perform a handover from a current cell to one of the other cells.

18. The method of claim **15**, further comprising:

transmitting the preamble information to the target base station for performing a radio access procedure with the target cell.

19. The method of claim **15**, wherein the access information includes a transmission characteristic of the preamble information, and the transmission characteristic relates to frequency and time used in transmitting the preamble information.

20. The method of claim **15**, wherein the access information includes system information transmitted from the target base station.

21. The method of claim **15**, further comprising:

receiving, from a network, radio resource information through a downlink shared channel (SCCH).

22. The method of claim **15**, further comprising:

receiving, from a network, radio resource information within an ACK/NACK signaling.

23. The method of claim **15**, further comprising:

transmitting a handover complete message to the target base station.

24. A mobile terminal for establishing a radio connection to a target base station in a mobile communications system, the mobile terminal comprising:

a radio protocol adapted to receive access information from a source base station after a handover request is accepted by the target base station and to perform a random access procedure with the target base station using the received access information, such that the access information is configured to permit the terminal to access the target base station,

wherein the access information includes preamble information for the random access procedure,

wherein the preamble information is a dedicated preamble used only for a specific terminal, and

wherein the dedicated preamble is determined by the target base station.

25. The terminal of claim **24**, wherein the source base station is a source enhanced Node B (source eNB) and the target base station is a target enhanced Node B (target eNB) respectively in an Evolved Universal Mobile Telecommunication System (E-UMTS).

26. The method of claim **1**, wherein the access information permits the terminal to access the target base station via a random access channel (RACH).

* * * * *

EXHIBIT 4

US007881236B2

(12) **United States Patent**
Park et al.

(10) **Patent No.: US 7,881,236 B2**
(45) **Date of Patent: Feb. 1, 2011**

(54) **DATA TRANSMISSION METHOD AND USER EQUIPMENT FOR THE SAME**

(75) Inventors: **Sung Jun Park**, Anyang-Si (KR); **Seung June Yi**, Anyang-Si (KR); **Young Dae Lee**, Anyang-Si (KR); **Sung Duck Chun**, Anyang-Si (KR)

(73) Assignee: **LG Electronics Inc.**, Seoul (KR)

(*) Notice: Subject to any disclaimer, the term of this patent is extended or adjusted under 35 U.S.C. 154(b) by 0 days.

(21) Appl. No.: **12/538,514**

(22) Filed: **Aug. 10, 2009**

(65) **Prior Publication Data**

US 2010/0035581 A1 Feb. 11, 2010

Related U.S. Application Data

(60) Provisional application No. 61/087,988, filed on Aug. 11, 2008.

(30) **Foreign Application Priority Data**

Jun. 25, 2009 (KR) 10-2009-0057128

(51) **Int. Cl.**
H04L 12/56 (2006.01)
H04J 1/16 (2006.01)

(52) **U.S. Cl.** **370/278**; 370/329; 370/412

(58) **Field of Classification Search** 370/329, 370/412, 278

See application file for complete search history.

(56) **References Cited**

U.S. PATENT DOCUMENTS

7,660,279 B2 * 2/2010 Brueck et al. 370/328
2007/0042784 A1 2/2007 Anderson
2007/0115871 A1 5/2007 Zhang et al.

(Continued)

FOREIGN PATENT DOCUMENTS

JP 2008-103862 A 5/2008

(Continued)

OTHER PUBLICATIONS

LG Electronics, "Corrections to the random access response reception," 3GPP TSG-RAN WG2 #62, May 5-9, 2008, p. 3, paragraph 5.1.4.

(Continued)

Primary Examiner—John Pezzlo
(74) *Attorney, Agent, or Firm*—Birch, Stewart, Kolasch & Birch, LLP

(57) **ABSTRACT**

A mobile communication technology, and, more particularly, a method for efficiently transmitting data stored in a message **3** (Msg**3**) buffer and a user equipment for the same is disclosed. The method of transmitting data by a user equipment in uplink includes receiving an uplink (UP) Grant signal from a base station on a specific message, determining whether there is data stored in a message **3** (Msg**3**) buffer when receiving the UL Grant signal on the specific message, determining whether the specific message is a random access response message, and transmitting the data stored in the Msg**3** buffer to the base station using the UL Grant signal received on the specific message, if there is data stored in the Msg**3** buffer when receiving the UL Grant signal on the specific message and the specific message is the random access response message.

13 Claims, 10 Drawing Sheets

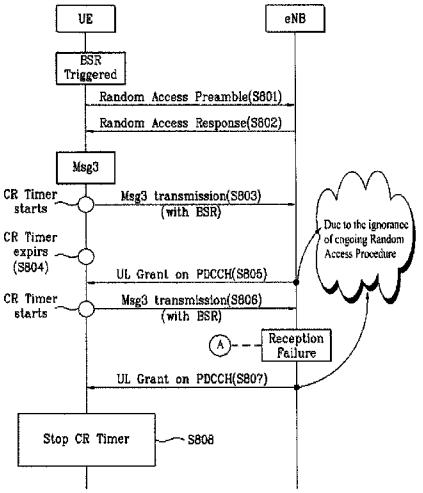

U.S. PATENT DOCUMENTS

2010/0034162	A1 *	2/2010	Ou et al.	370/329
2010/0037113	A1 *	2/2010	Maheshwari et al.	714/748

FOREIGN PATENT DOCUMENTS

KR	10-2007-0055004	A	5/2007
KR	10-2007-0107619	A	11/2007
KR	10-2008-0030941	A	4/2008
WO	WO 2008/023932	A1	2/2008

OTHER PUBLICATIONS

3GPP TS 36.321 V8.2.0., 3rd Generation Partnership Project; Technical Specification Group Radio Access Network; Evolved Universal Terrestrial Radio Access (E-UTRA) Medium Access Control (MAC) protocol specification (Release 8), pp. 1-33, May 2008.

3rd Generation Partnership Project (3GPP), "Enforcing New Transmission After Flushing HARQ Process", pp. 1-6, Feb. 9-13, 2009, Athens, Greece, XP050323002.

* cited by examiner

FIG. 1

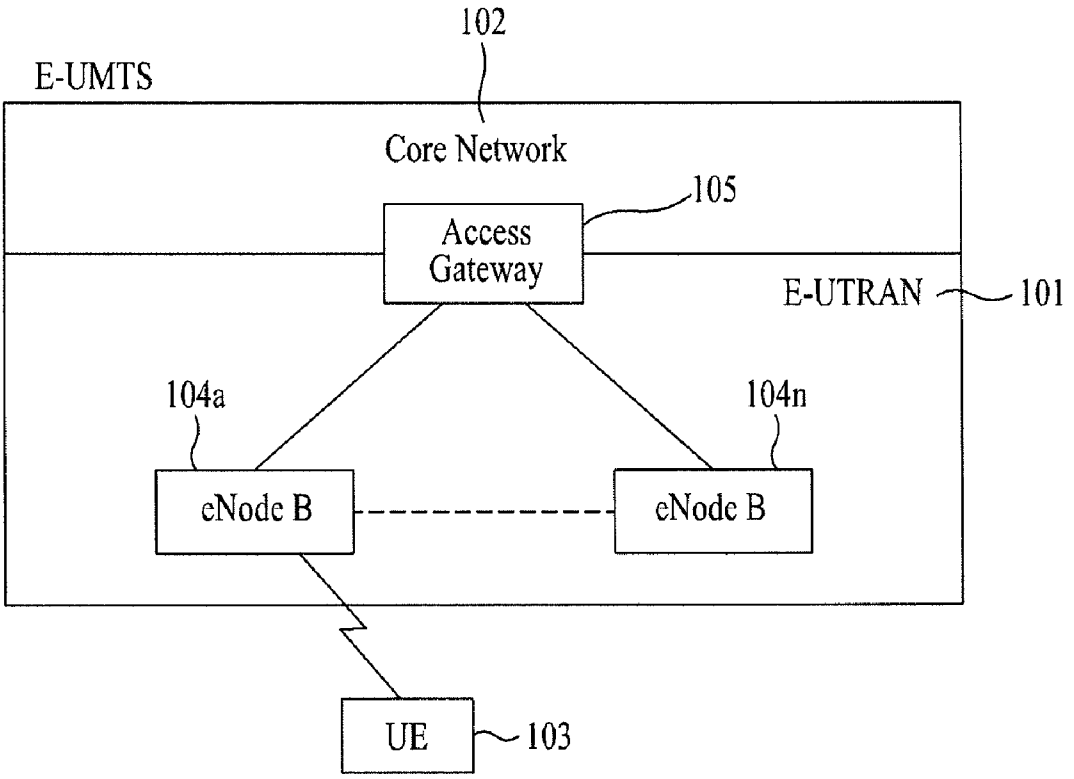
102
E-UMTS
Core Network
105
Access Gateway
E-UTRAN
101
104a
104n
eNode B
eNode B
UE
103

FIG. 2

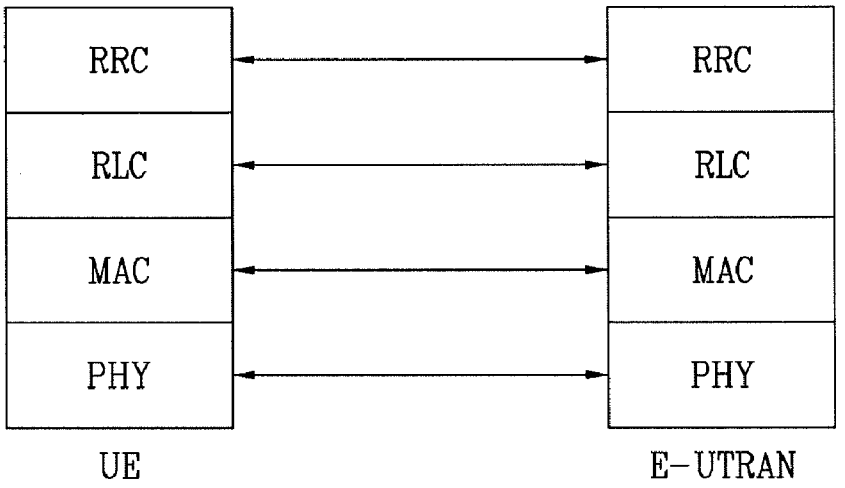
RRC
RLC
MAC
PHY
UE
RRC
RLC
MAC
PHY
E-UTRAN

FIG. 3

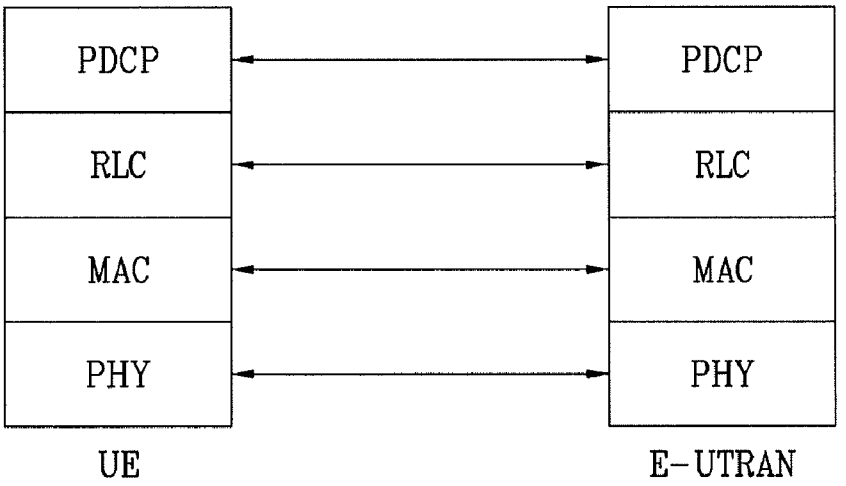
PDCP
RLC
MAC
PHY
UE
PDCP
RLC
MAC
PHY
E-UTRAN

FIG. 4

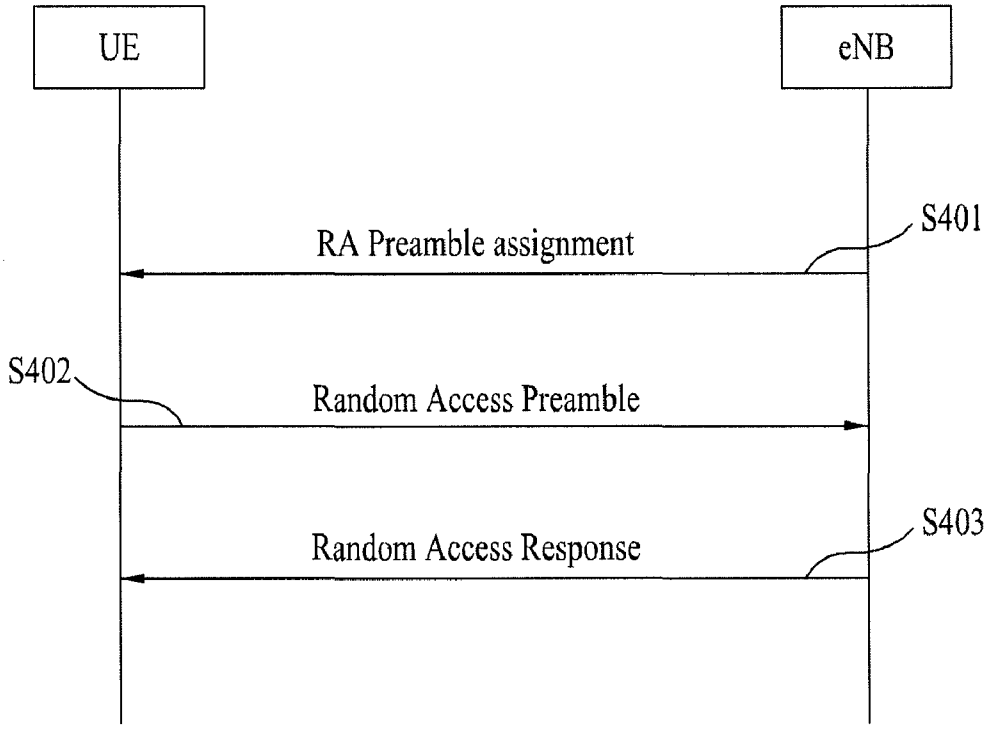
UE
eNB
S401
RA Preamble assignment
S402
Random Access Preamble
S403
Random Access Response

FIG. 5

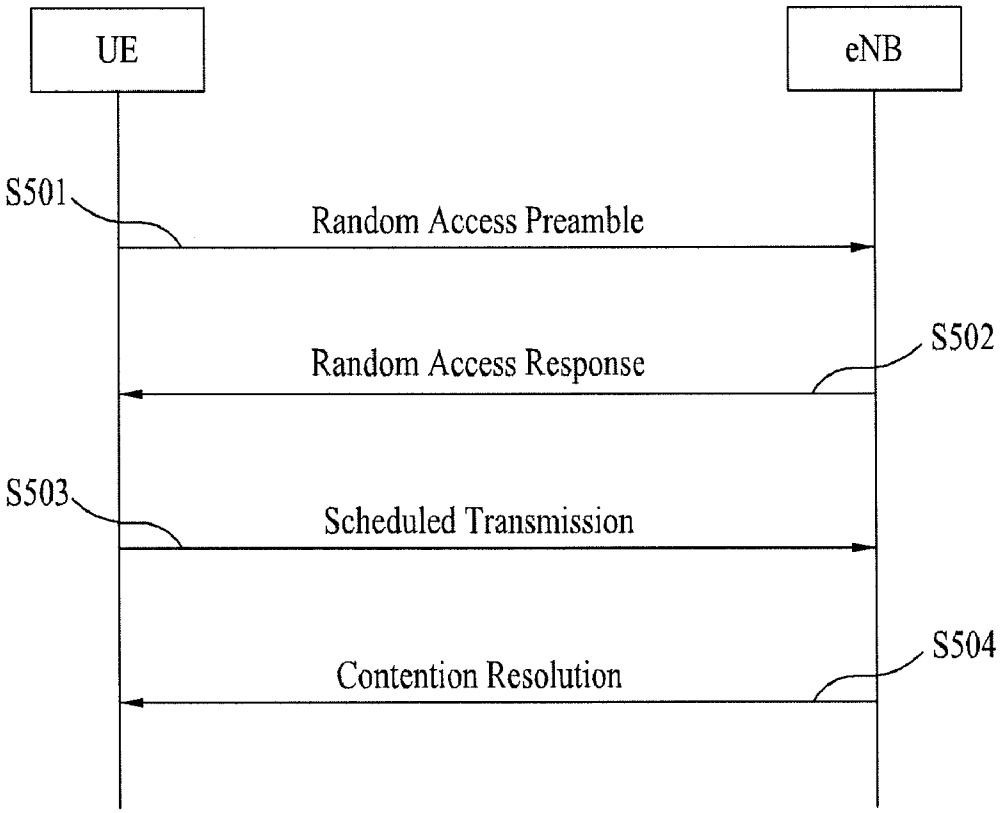
UE
eNB
S501
Random Access Preamble
S502
Random Access Response
S503
Scheduled Transmission
S504
Contention Resolution

FIG. 6

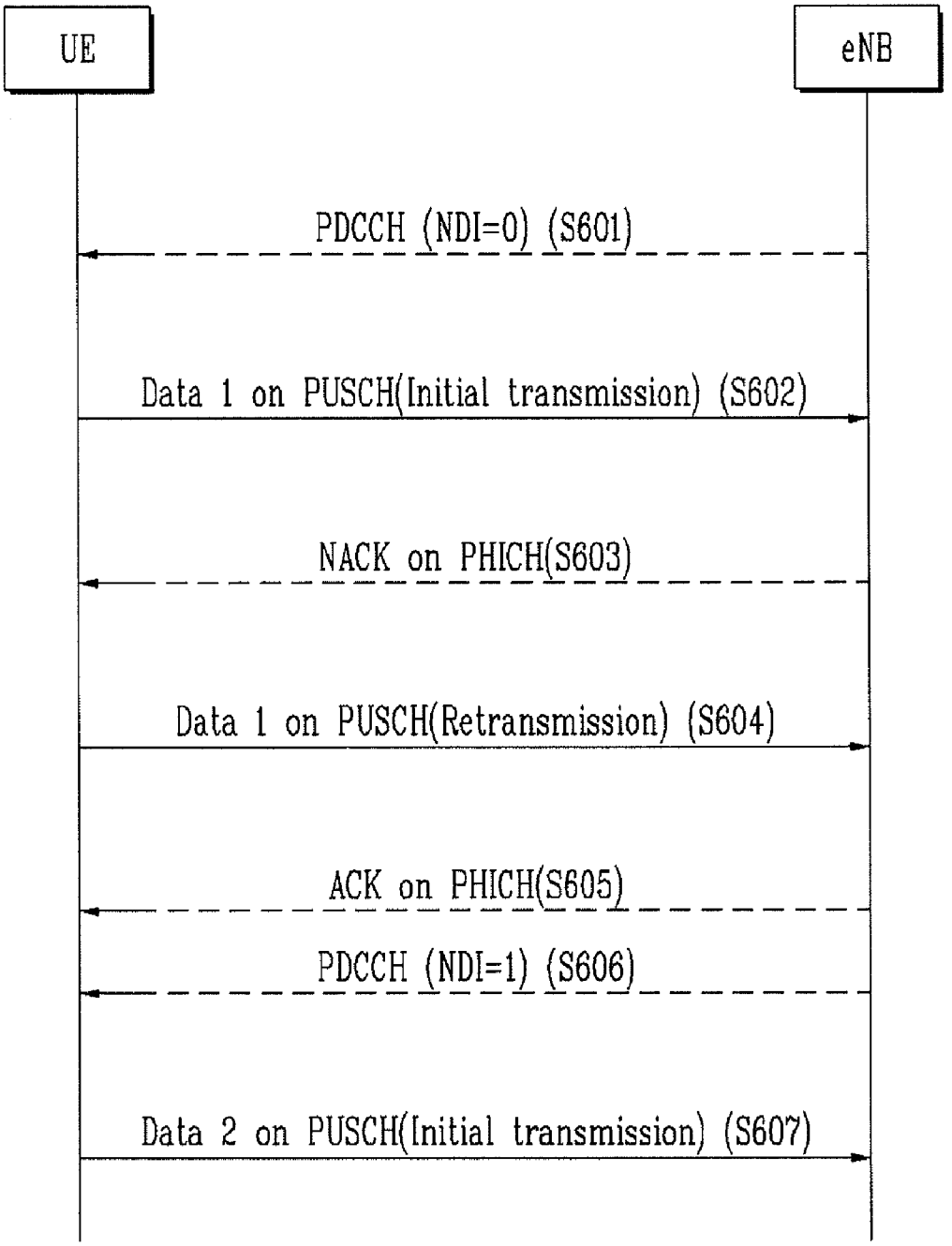
UE
eNB
PDCCH (NDI=0) (S601)
Data 1 on PUSCH(Initial transmission) (S602)
NACK on PHICH(S603)
Data 1 on PUSCH(Retransmission) (S604)
ACK on PHICH(S605)
PDCCH (NDI=1) (S606)
Data 2 on PUSCH(Initial transmission) (S607)

FIG. 7

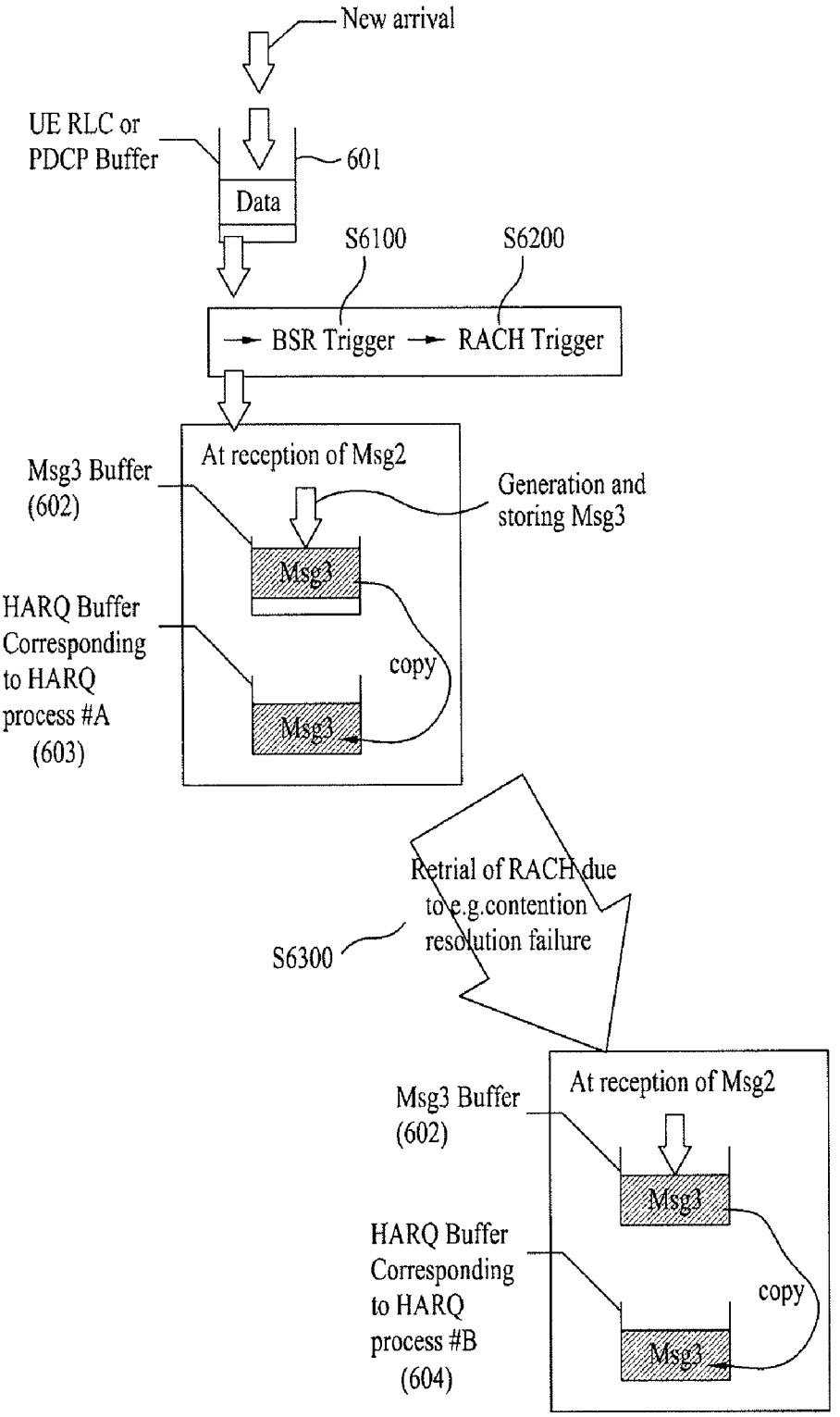
New arrival
UE RLC or PDCP Buffer
601
Data
S6100
S6200
BSR Trigger
RACH Trigger
At reception of Msg2
Msg3 Buffer (602)
Generation and storing Msg3
Msg3
HARQ Buffer Corresponding to HARQ process #A (603)
copy
Msg3
Retrial of RACH due to e.g.contention resolution failure
S6300
At reception of Msg2
Msg3 Buffer (602)
Msg3
HARQ Buffer Corresponding to HARQ process #B (604)
copy
Msg3

FIG. 8

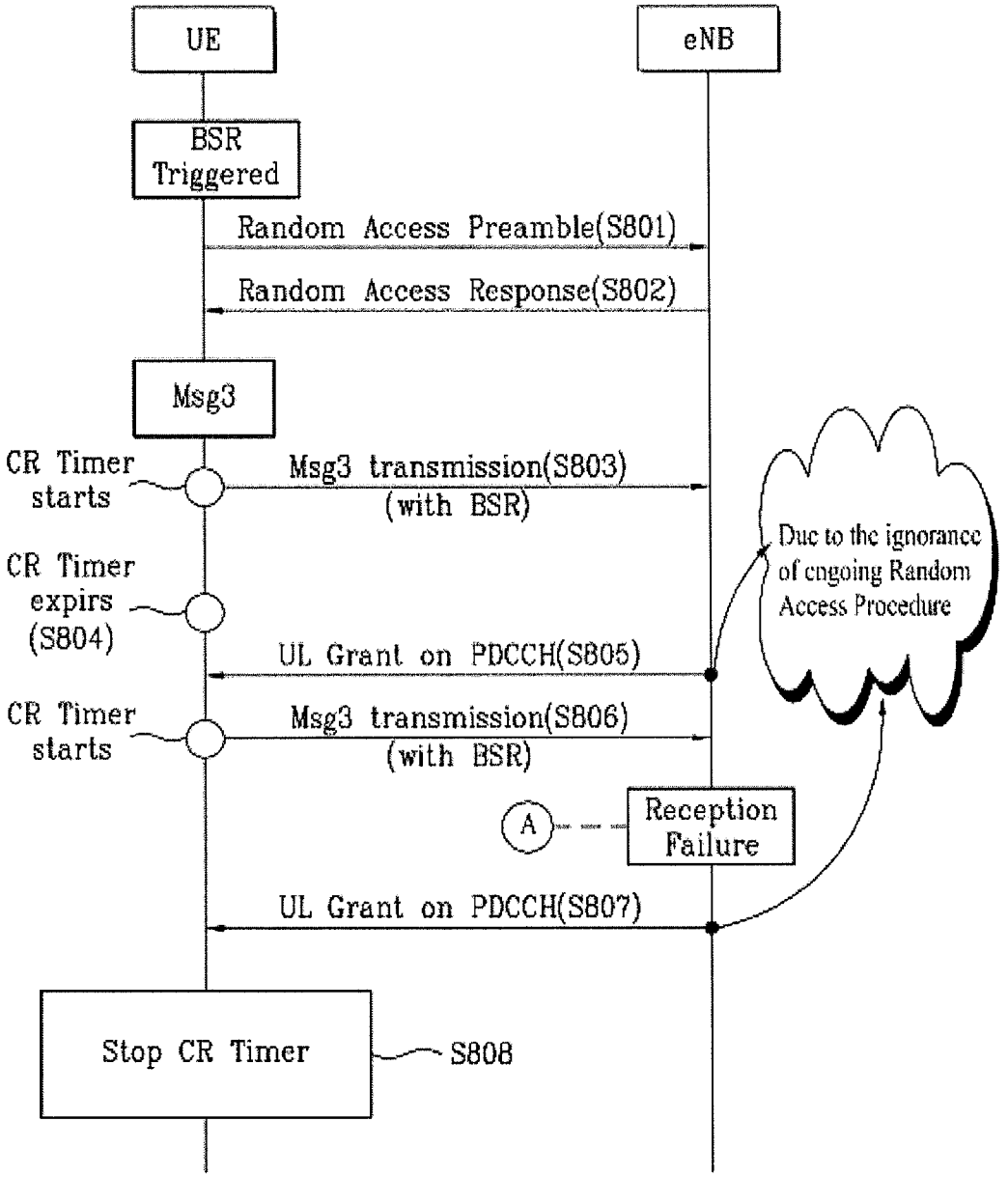
UE
eNB
BSR Triggered
Random Access Preamble(S801)
Random Access Response(S802)
Msg3
CR Timer starts
Msg3 transmission(S803) (with BSR)
CR Timer expirs (S804)
UL Grant on PDCCH(S805)
CR Timer starts
Msg3 transmission(S806) (with BSR)
A
Reception Failure
UL Grant on PDCCH(S807)
Due to the ignorance of ongoing Random Access Procedure
Stop CR Timer
S808

FIG. 9

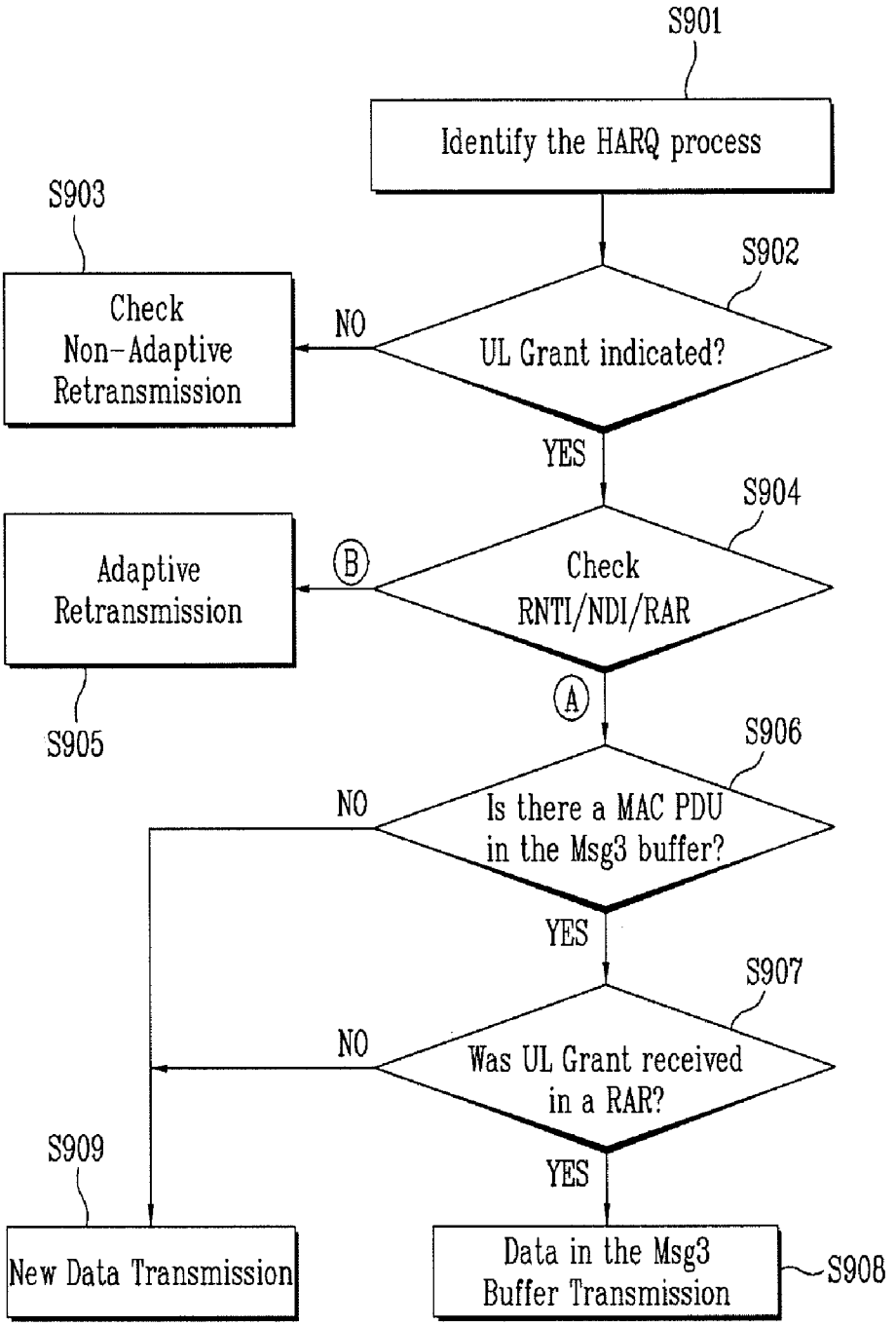
S901
Identify the HARQ process
S902
UL Grant indicated?
NO
S903
Check Non-Adaptive Retransmission
YES
S904
Check RNTI/NDI/RAR
B
Adaptive Retransmission
S905
A
S906
Is there a MAC PDU in the Msg3 buffer?
NO
YES
S907
Was UL Grant received in a RAR?
NO
YES
S909
New Data Transmission
Data in the Msg3 Buffer Transmission
S908

FIG. 10

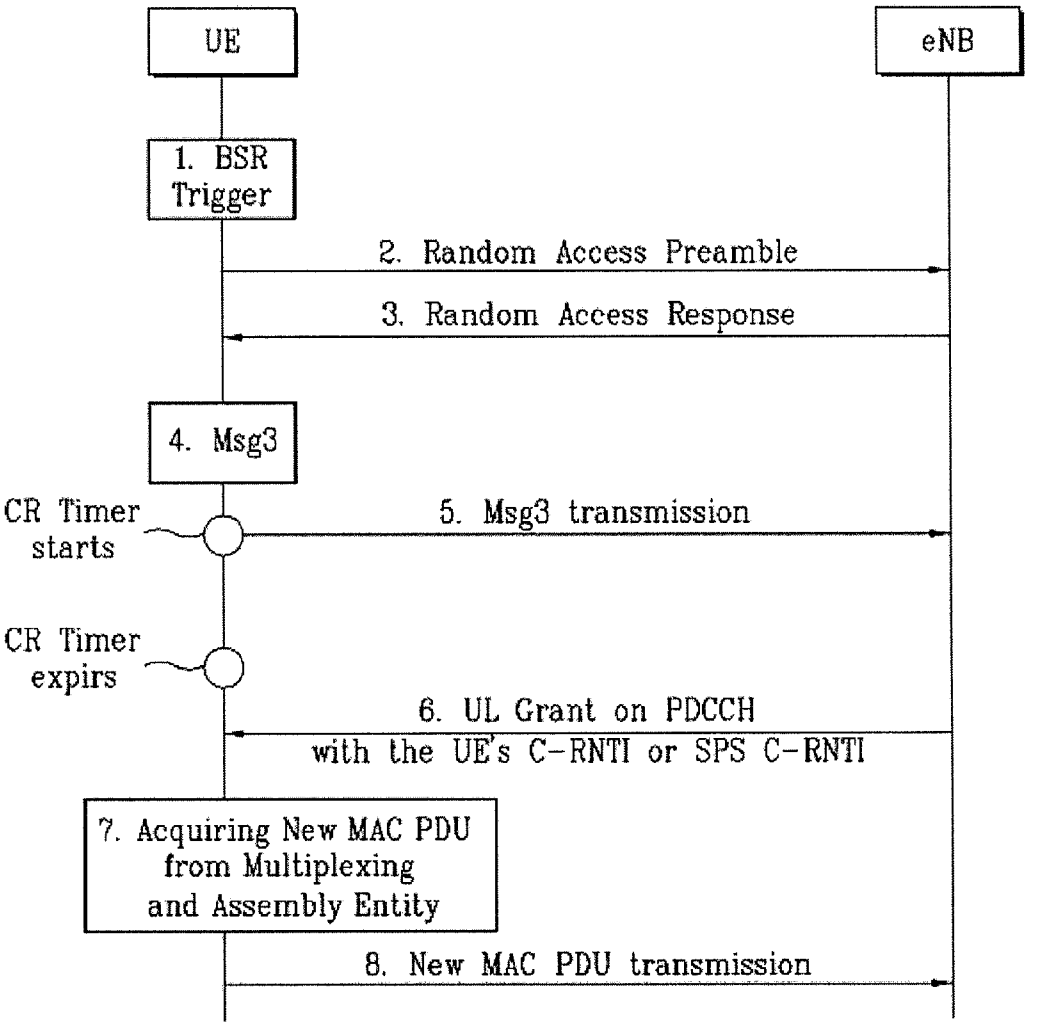
UE
eNB
1. BSR Trigger
2. Random Access Preamble
3. Random Access Response
4. Msg3
CR Timer starts
5. Msg3 transmission
CR Timer expirs
6. UL Grant on PDCCH with the UE's C-RNTI or SPS C-RNTI
7. Acquiring New MAC PDU from Multiplexing and Assembly Entity
8. New MAC PDU transmission

FIG. 11

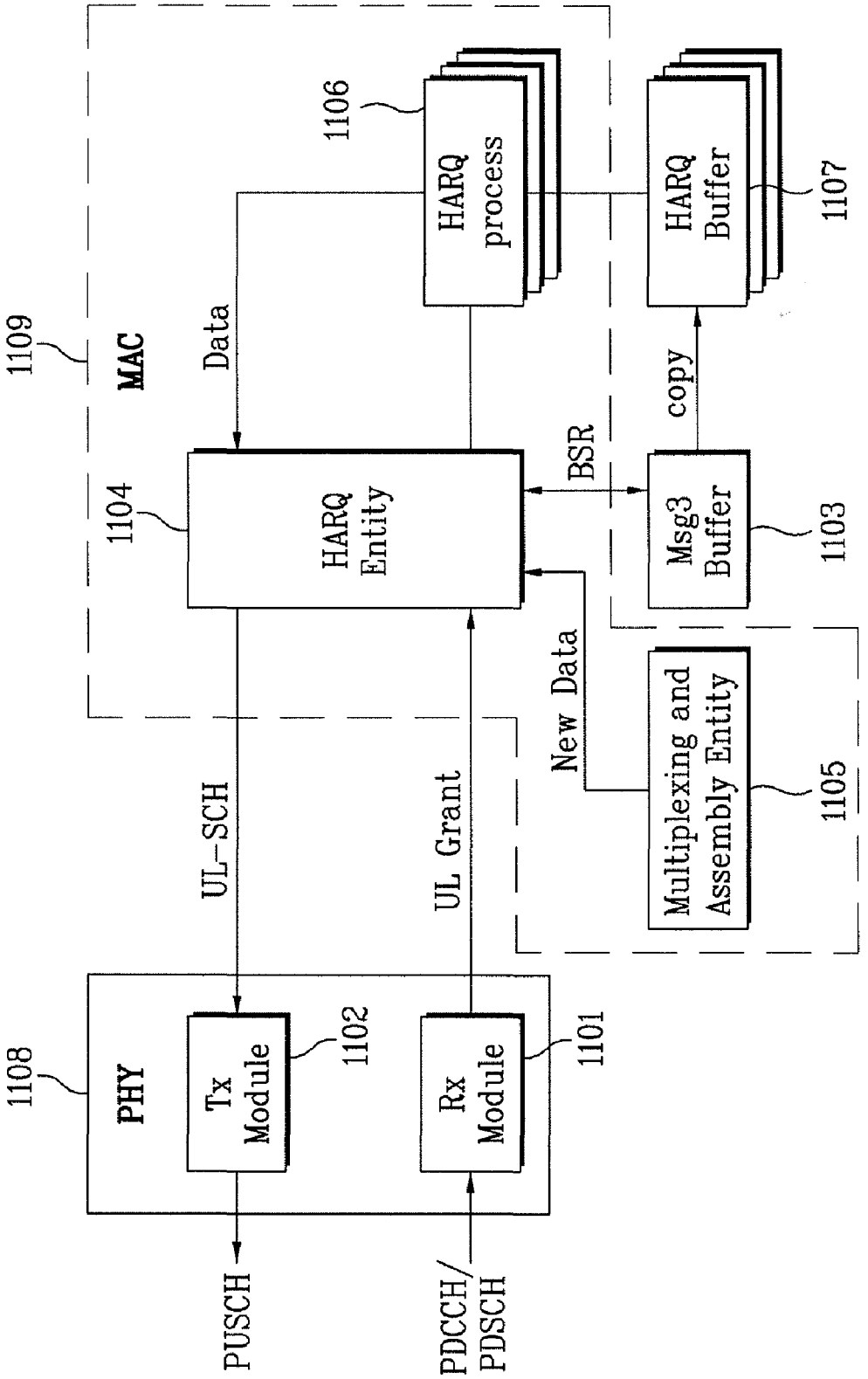
1109
MAC
1104
HARQ Entity
Data
1106
HARQ process
HARQ Buffer
1107
copy
BSR
Msg3 Buffer
1103
New Data
Multiplexing and Assembly Entity
1105
UL-SCH
UL Grant
1108
PHY
Tx Module
1102
Rx Module
1101
PUSCH
PDCCH/ PDSCH

DATA TRANSMISSION METHOD AND USER EQUIPMENT FOR THE SAME

CROSS REFERENCE TO RELATED APPLICATIONS

This application claims the benefit of U.S. Provisional Application No. 61/087,988, filed on Aug. 11, 2008, which is hereby incorporated by reference as if fully set forth herein.

This application claims the benefit of Korean Patent Application No. 10-2009-0057128, filed on Jun. 25, 2009, which is hereby incorporated by reference as if fully set forth herein.

BACKGROUND OF THE INVENTION

1. Field of the Invention

The present invention relates to a mobile communication technology, and more particularly, to a method for efficiently transmitting data stored in a message **3** (Msg**3**) buffer and a user equipment for the same.

2. Discussion of the Related Art

As an example of a mobile communication system to which the present invention is applicable, a 3rd Generation Partnership Project Long Term Evolution (3GPP LTE) communication system will be schematically described.

FIG. **1** is a schematic view showing the network architecture of an Evolved Universal Mobile Telecommunication System (E-UMTS) as an example of a mobile communication system.

The E-UMTS is evolved from the existing UMTS and has been currently standardized in the 3GPP. Generally, the E-UMTS may be called an LTE system.

An E-UMTS network may be largely divided into an Evolved UMTS Terrestrial Radio Access Network (E-UTRAN) **101** and a Core Network (CN) **102**. The E-UTRAN **101** may include a User Equipment (UE) **103**, a base station (hereinafter, referred to as an "eNode B" or "eNB") **104**, and an Access Gateway (AG) **105** positioned at the end of the network and connected to an external network. The AG **105** may be divided into a portion for processing user traffic and a portion for processing control traffic. At this time, an AG for processing new user traffic and an AG for processing control traffic may communicate with each other using a new interface.

One or more cells may exist in one eNode B. A plurality of eNode Bs may be connected by an interface for transmitting the user traffic or control traffic. The CN **102** may include the AG **105** and a node for registering a user of the UE **103**. An interface for distinguishing between the E-UTRAN **101** and the CN **102** may be used.

Layers of radio interface protocol between the UE and the network may be classified into a first layer L1, a second layer L2 and a third layer L3 based on three lower layers of an Open System Interconnection (OSI) reference model that is widely known in the field of communication systems. A physical layer belonging to the first layer provides an information transfer service using a physical channel. A Radio Resource Control (RRC) layer belonging to the third layer serves to control radio resources between the UE and the network. The UE and the network exchange an RRC message via the RRC layer. The RRC layer may be distributed and located at network nodes of the eNode B **104** and the AG **105**. Alternatively, the RRC layer may be located at only the eNode B **104** or the AG **105**.

FIGS. **2** and **3** show the structures of radio interface protocols between the UE and the UTRAN based on a 3GPP radio access network standard.

The radio interface protocols of FIGS. **2** and **3** are horizontally formed of a physical layer, a data link layer and a network layer. The radio interface protocols are vertically formed of a user plane for transmitting data information and a control plane for transmitting control signals. In detail, FIG. **2** shows the layers of a radio protocol control plane and FIG. **3** shows the layers of a radio protocol user plane. The protocol layers of FIGS. **2** and **3** may be divided into a first layer (L1), a second layer (L2) and a third layer (L3) based on three lower layers of an OSI reference model that is widely known in the field of communication systems.

Hereinafter, the layers of the control plane of the radio protocol of FIG. **2** and the user plane of the radio protocol of FIG. **3** will be described.

A physical (PHY) layer of the first layer provides an information transfer service to an upper layer using a physical channel. The PHY layer is connected to an upper layer, such as a Medium Access Control (MAC) layer, via a transport channel. Data is transferred between the MAC layer and the PHY layer via the transport channel. At this time, the transport channel is largely divided into a dedicated transport channel and a common transport channel, depending on whether or not a channel is shared. Data is also transferred between different PHY layers, such as a physical layer of a transmitting side and a physical layer of a receiving side, via a physical channel using radio resources.

Various layers exist in the second layer. First, the MAC layer serves to map various logical channels to various transport channels and serves to multiplex several logical channels into one transport channel. The MAC layer is connected to a Radio Link Control (RLC) layer, which is an upper layer, by the logical channel. The logical channel may be largely divided into a control channel for transmitting information about the control plane and a traffic channel for transmitting information about the user plane according to the kinds of information transmitted.

The RLC layer of the second layer serves to segment and concatenate data received from an upper layer so as to adjust data size such that a lower layer transmits data in a radio section. In addition, the RLC provides three modes, namely, a Transparent Mode (TM), an Unacknowledged Mode (UM) and an Acknowledged Mode (AM) in order to guarantee various Quality of Services (QoSs) requested by Radio Bearers (RBs). In particular, the AM RLC performs a retransmission function using an Automatic Repeat and Request (ARQ) function for reliable data transmission.

A Packet Data Convergence Protocol (PDCP) layer of the second layer performs a header compression function to reduce the size of an Internet Protocol (IP) packet header that includes unnecessary control information and has a relatively large size, for effective transmission in a radio section having a relatively small bandwidth when transmitting an IP packet such as an IPv4 packet or an IPv6 packet. Therefore, only necessary information in a header portion of data is transmitted so as to improve transmission efficiency of the radio section. In the LTE system, the PDCP layer also performs a security function, which includes ciphering for preventing data from being intercepted by a third party and integrity protection for preventing data from being handled by a third party.

A Radio Resource Control (RRC) located at a highest portion of the third layer is defined only in the control plane. The RRC layer handles logical channels, transport channels and physical channels for the configuration, re-configuration and release of RBs. Here, the RBs refer to logical paths provided by the first and second layers of the radio protocol, for data transfer between the UE and the UTRAN, and the

configuration of the RBs refers to a process of defining the characteristics of the radio protocol layer and channel necessary for providing a specific service, and setting detailed parameters and operation methods. Each of the RBs is divided into a signaling RB and a data RB. The SRB is used as a path for transmitting an RRC message in the control plane (C-plane), and the DRB is used as a path for transmitting user data in the user plane (U-plane).

Downlink transport channels for transmitting data from a network to a UE may include a Broadcast Channel (BCH) for transmitting system information and a downlink Shared Channel (SCH) for transmitting user traffic or a control message. The traffic or the control message of a downlink multicast or broadcast service may be transmitted via the downlink SCH or via a separate Downlink Multicast Channel (MCH). Uplink transport channels for transmitting data from a UE to a network may include a Random Access Channel (RACH) for transmitting an initial control message and an uplink SCH for transmitting user traffic or a control message.

Downlink physical channels for transmitting information transferred via the downlink transport channels in a radio section between a network and a UE may include a Physical Broadcast Channel (PBCH) for transmitting information about a BCH, a Physical Multicast Channel (PMCH) for transmitting information about an MCH, a Physical Downlink Shared Channel (PDSCH) for transmitting information about a PCH and a downlink SCH, and a Physical Downlink Control Channel (PDCCH) (also referred to as a DL L1/L2 control channel) for transmitting control information provided by the first layer and the second layer, such as downlink (DL) or uplink (UL) scheduling grant information. Uplink physical channels for transmitting information transferred via the uplink transport channels in a radio section between a network and a UE may include a Physical Uplink Shared Channel (PUSCH) for transmitting information about an uplink SCH, a Physical Random Access Channel (PRACH) for transmitting information about an RACH, and a Physical Uplink Control Channel (PUCCH) for transmitting control information provided by the first layer and the second layer, such as a HARQ ACK or NACK, a Scheduling Request (SR), a Channel Quality Indicator (CQI) report.

Hereinafter, a random access procedure provided by an LTE system will be schematically described based on the above description.

First, a UE performs the random access procedure in the following cases.

- when the UE performs initial access because there is no RRC Connection with an eNode B,
- when the UE initially accesses a target cell in a handover procedure,
- when the random access procedure is requested by a command of an eNode B,
- when there is uplink data transmission in a situation where uplink time synchronization is not aligned or where a specific radio resource used for requesting radio resources is not allocated, and
- when a recovery procedure is performed in case of radio link failure or handover failure.

In the LTE system, there are provided two procedures in selecting a random access preamble: one is a contention based random access procedure in which the UE randomly selects one preamble within a specific group for use, and another is a non-contention based random access procedure in which the UE uses a random access preamble allocated only to a specific UE by the eNode B. The non-contention based random access procedure may be used only in the handover procedure or when it is requested by the command of the base station, as described above.

A random access procedure of a UE with a specific eNode B may largely include (1) a step of, at the UE, transmitting a random access preamble to the eNode B (hereinafter, referred to as a "message **1**" transmitting step if such use will not lead to confusion), (2) a step of receiving a random access response from the eNode B in correspondence with the transmitted random access preamble (hereinafter, referred to as a "message **2**" receiving step if such use will not lead to confusion), (3) a step of transmitting an uplink message using the information received by the random access response message (hereinafter, referred to as a "message **3**" transmitting step if such use will not lead to confusion), and (4) a step of receiving a message corresponding to the uplink message from the eNode B (hereinafter, referred to as a "message **4**" receiving step if such use will not lead to confusion).

In the random access procedure, the UE stores data to be transmitted via the message **3** in a message **3** (Msg**3**) buffer and transmits the data stored in the msg**3** buffer in correspondence with the reception of an Uplink (UL) Grant signal. The UL Grant signal indicates information about uplink radio resources which may be used when the UE transmits a signal to the eNode B, and is received on a random access response message received on a PDCCH or a PUSCH in the LTE system. According to the current LTE system standard, it is defined that, if the UL Grant signal is received in a state in which data is stored in the Msg**3** buffer, the data stored in the Msg**3** buffer is transmitted regardless of the reception mode of the UL Grant signal. As described above, if the data stored in the Msg**3** buffer is transmitted in correspondence with the reception of all UL Grant signals, problems may occur. Accordingly, there is a need for research to solve such problems.

SUMMARY OF THE INVENTION

Accordingly, the present invention is directed to a data transmission method and a user equipment for the same that substantially obviate one or more problems due to limitations and disadvantages of the related art.

An object of the present invention is to provide a data transmission method and a user equipment for the same, which is capable of solving a problem which may occur when data stored in a message **3** (Msg**3**) buffer is transmitted according to a reception mode of an Uplink (UL) Grant signal.

Additional advantages, objects, and features of the invention will be set forth in part in the description which follows and in part will become apparent to those having ordinary skill in the art upon examination of the following or may be learned from practice of the invention. The objectives and other advantages of the invention may be realized and attained by the structure particularly pointed out in the written description and claims hereof as well as the appended drawings.

To achieve these objects and other advantages and in accordance with the purpose of the invention, as embodied and broadly described herein, a method of transmitting data by a user equipment through an uplink includes receiving an uplink grant (UL Grant) signal from a base station on a specific message, determining whether there is data stored in a message **3** (Msg**3**) buffer when receiving the UL Grant signal on the specific message, determining whether the specific message is a random access response message, and transmitting the data stored in the Msg**3** buffer to the base station using the UL Grant signal received on the specific

message, if there is data stored in the Msg3 buffer when receiving the UL Grant signal on the specific message and the specific message is the random access response message.

If there is no data stored in the Msg3 buffer when receiving the UL Grant signal on the specific message or the specific message is not the random access response message, new data may be transmitted to the base station in correspondence with the UL Grant signal received on the specific message.

The UL Grant signal received on the specific message may be a UL Grant signal received on a Physical Downlink Control Channel (PDCCH). In this case, the user equipment may transmit new data in correspondence with the UL Grant signal received on the PDCCH.

The UL Grant signal received on the specific message may be a UL Grant signal received on a random access response message received on Physical Downlink Shared Channel (PDSCH). In this case, if there is data stored in the Msg3 buffer when receiving the UL Grant signal on the random access response message, the user equipment may transmit the data stored in the buffer in the Msg3 buffer using the UL Grant signal received on the random access response message.

The data stored in the Msg3 buffer may be a Medium Access Control Protocol Data Unit (MAC PDU) including a user equipment identifier, and the data stored in the Msg3 buffer further include information about a buffer status report (BSR) if the user equipment starts the random access procedure for the BSR.

In another aspect of the present invention, a user equipment includes a reception module receiving an uplink grant (UL Grant) signal from a base station on a specific message, a transmission module transmitting data to the base station using the UL Grant signal received on the specific message, a message 3 (Msg3) buffer storing UL data to be transmitted in a random access procedure, and a Hybrid Automatic Repeat Request (HARQ) entity determining whether there is data stored in the Msg3 buffer when the reception module receives the UL Grant signal and the specific message is a random access response message, acquiring the data stored in the Msg3 buffer if there is data stored in the Msg3 buffer when the reception module receives the UL Grant signal and the specific message is the random access response message, and controlling the transmission module to transmit the data stored in the Msg3 buffer to the base station using the UL Grant signal received by the reception module on the specific message.

The user equipment may further include a multiplexing and assembly entity used for transmission of new data. In this case, the HARQ entity may acquire the new data to be transmitted from the multiplexing and assembly entity if there is no data stored in the Msg3 buffer when the reception module receives the UL Grant signal on the specific message or the received message is not the random access response message, and control the transmission module to transmit the new data acquired from the multiplexing and assembly entity using the UL Grant signal received by the reception module on the specific message.

The user equipment may further include one or more HARQ processes, and HARQ buffers respectively corresponding to the one or more HARQ processes. In this case, the HARQ entity may transfer the data acquired from the multiplexing and assembly entity or the Msg3 buffer to a specific HARQ process of the one or more HARQ processes and control the specific HARQ process to transmit the data acquired from the multiplexing and assembly entity or the Msg3 buffer through the transmission module.

When the specific HARQ process transmits the data stored in the Msg3 buffer through the transmission module, the data stored in the Msg3 buffer may be controlled to be copied into a specific HARQ buffer corresponding to the specific HARQ process, and the data copied into the specific HARQ buffer may be controlled to be transmitted through the transmission module.

The UL Grant signal received by the reception module on the specific message may be a UL Grant signal received on a Physical Downlink Control Channel (PDCCH). In this case, the HARQ entity may control new data to be transmitted in correspondence with the received UL Grant signal received on the PDCCH.

The UL Grant signal received by the reception module on the specific message may be a UL Grant signal received on a random access response message received on Physical Downlink Shared Channel (PDSCH), and the HARQ entity may control the data stored in the Msg3 buffer to be transmitted using the UL Grant signal received on the random access response message if there is data stored in the Msg3 buffer when the reception module receives the UL Grant signal on the random access response message.

According to the above-described embodiments of the present invention, it is possible to transmit data stored in a Msg3 buffer according to a reception mode of a UL Grant signal, without confusion.

It is to be understood that both the foregoing general description and the following detailed description of the present invention are exemplary and explanatory and are intended to provide further explanation of the invention as claimed.

BRIEF DESCRIPTION OF THE DRAWINGS

The accompanying drawings, which are included to provide a further understanding of the invention and are incorporated in and constitute a part of this application, illustrate embodiment(s) of the invention and together with the description serve to explain the principle of the invention. In the drawings:

FIG. 1 is a schematic view showing the network architecture of an Evolved Universal Mobile Telecommunication System (E-UMTS) as an example of a mobile communication system;

FIGS. 2 and 3 are views showing the structures of radio interface protocols between a user equipment (UE) and a UMTS Terrestrial Radio Access Network (UTRAN) based on a 3rd Generation Partnership Project (3GPP) radio access network standard;

FIG. 4 is a view illustrating an operating procedure of a UE and a base station (eNode B) in a non-contention based random access procedure;

FIG. 5 is a view illustrating an operating procedure of a UE and an eNode B in a contention based random access procedure;

FIG. 6 is a view illustrating an uplink Hybrid Automatic Repeat Request (HARQ) scheme;

FIG. 7 is a view illustrating a method of transmitting a message 3 in a random access procedure when uplink radio resources are requested;

FIG. 8 is a view illustrating a problem which may occur when data stored in a message 3 buffer is transmitted by an Uplink (UL) Grant signal received on a message other than a random access response message;

FIG. 9 is a flowchart illustrating a method of transmitting uplink data by a UE according to a preferred embodiment of the present invention;

FIG. **10** is a view illustrating a method of transmitting uplink data when a Buffer status Report (BSR) is triggered in a UE, according to an embodiment of the present invention; and

FIG. **11** is a schematic view showing the configuration of a UE according to an embodiment of the present invention.

DETAILED DESCRIPTION OF THE INVENTION

Hereinafter, the preferred embodiments of the present invention will be described with reference to the accompanying drawings. It is to be understood that the detailed description which will be disclosed along with the accompanying drawings is intended to describe the exemplary embodiments of the present invention, and is not intended to describe a unique embodiment which the present invention can be carried out. Hereinafter, the detailed description includes detailed matters to provide full understanding of the present invention. However, it will be apparent to those skilled in the art that the present invention can be carried out without the detailed matters. For example, the following description will be made on the assumption that a mobile communication system is a 3rd Generation Partnership Project Long Term Evolution (3GPP LTE) system, but the present invention is applicable to other mobile communication systems excluding the 3GPP LTE system.

In some instances, well-known structures and devices are omitted in order to avoid obscuring the concepts of the present invention and the important functions of the structures and devices are shown in block diagram form. The same reference numbers will be used throughout the drawings to refer to the same or like parts.

In the following description, it is assumed that a terminal includes a mobile or fixed user end device such as a user equipment (UE) and a mobile station (MS), and a base station includes a node of a network end communicating with a terminal, such as a Node-B, an eNode B, and a base station.

As described above, in the following description, a problem which may occur when data stored in a message **3** (Msg**3**) buffer is transmitted according to a reception mode of an Uplink (UL) Grant signal will be described in detail and a method of solving the problem will be described. Transmission and reception of a signal using a random access procedure and a Hybrid Automatic Repeat Request (HARQ) scheme will be described in detail.

FIG. **4** is a view illustrating an operating procedure of a terminal (UE) and a base station (eNode B) in a non-contention based random access procedure.

(1) Random Access Preamble Assignment

As described above, a non-contention based random access procedure may be performed (1) in a handover procedure and (2) when the random access procedure is requested by a command of an eNode B. Even in these cases, a contention based random access procedure may be performed.

First, it is important that a specific random access preamble without the possibility of collision is received from the eNode B, for the non-contention based random access procedure. Methods of receiving the random access preamble may include a method using a handover command and a method using a Physical Downlink Control Channel (PDCCH) command. The UE receives an assigned random access preamble (S**401**).

(2) Message **1** Transmission

The UE transmits the preamble to the eNode B after receiving the assigned random access preamble from the eNode B as described above (S**402**).

(3) Message **2** Transmission

The UE attempts to receive a random access response within a random access response reception window indicated by the eNode B through a handover command or system information after transmitting the random access preamble in step S**402** (S**403**). More specifically, the random access response information may be transmitted in the form of a Medium Access Control (MAC) Packet Data Unit (PDU), and the MAC PDU may be transferred via a Physical Downlink Shared Channel (PDSCH). In addition, the UE preferably monitors the PDCCH in order to enable to the UE to properly receive the information transferred via the PDSCH. That is, the PDCCH may preferably include information about a UE that should receive the PDSCH, frequency and time information of radio resources of the PDSCH, a transfer format of the PDSCH, and the like. Here, if the PDCCH has been successfully received, the UE may appropriately receive the random access response transmitted on the PDSCH according to information of the PDCCH. The random access response may include a random access preamble identifier (e.g. Random Access-Radio Network Temporary Identifier (RA-RNTI)), an UL Grant indicating uplink radio resources, a temporary C-RNTI, a Time Advance Command (TAC), and the like.

As described above, the reason why the random access response includes the random access preamble identifier is because a single random access response may include random access response information of at least one UE and thus it is reported to which UE the UL Grant, the Temporary C-RNTI and the TAC are valid. In this step, it is assumed that the UE selects a random access preamble identifier matched to the random access preamble selected by the UE in step S**402**.

In the non-contention based random access procedure, it is determined that the random access procedure is normally performed, by receiving the random access response information, and the random access procedure may be finished.

FIG. **5** is a view illustrating an operating procedure of a UE and an eNode B in a contention based random access procedure.

(1) Message **1** Transmission

First, the UE may randomly select a single random access preamble from a set of random access preambles indicated through system information or a handover command, and select and transmit a Physical Random Access Channel (PRACH) capable of transmitting the random access preamble (S**501**).

(2) Message **2** Reception

A method of receiving random access response information is similar to the above-described non-contention based random access procedure. That is, the UE attempts to receive its own random access response within a random access response reception window indicated by the eNode B through the system information or the handover command, after the random access preamble is transmitted in step S**501**, and receives a Physical Downlink Shared Channel (PDSCH) using random access identifier information corresponding thereto (S**502**). Accordingly, the UE may receive a UL Grant, a Temporary C-RNTI, a TAC and the like.

(3) Message **3** Transmission

If the UE has received the random access response valid for the UE, the UE may process all of the information included in the random access response. That is, the UE applies the TAC, and stores the temporary C-RNTI. In addition, data which will be transmitted in correspondence with the reception of the valid random access response may be stored in a Msg**3**

buffer. A process of storing the data in the Msg**3** buffer and transmitting the data will be described later with reference to FIG. **7**.

The UE uses the received UL Grant so as to transmit the data (that is, the message **3**) to the eNode B (S**503**). The message **3** should include a UE identifier. In the contention based random access procedure, the eNode B may not determine which UEs are performing the random access procedure, but later the UEs should be identified for contention resolution.

Here, two different schemes for including the UE identifier may be provided. A first scheme is to transmit the UE's cell identifier through an uplink transmission signal corresponding to the UL Grant if the UE has already received a valid cell identifier allocated by a corresponding cell prior to the random access procedure. Conversely, the second scheme is to transmit the UE's unique identifier (e.g., S-TMSI or random ID) if the UE has not received a valid cell identifier prior to the random access procedure. In general, the unique identifier is longer than the cell identifier. If the UE has transmitted data corresponding to the UL Grant, the UE starts a contention resolution (CR) timer.

(4) Message **4** Reception

After transmitting the data with its identifier through the UL Grant included in the random access response, the UE waits for an indication (instruction) from the eNode B for contention resolution. That is, the UE attempts to receive the PDCCH so as to receive a specific message (S**504**). Here, there are two schemes to receive the PDCCH. As described above, the UE attempts to receive the PDCCH using its own cell identifier if the message **3** transmitted in correspondence with the UL Grant is transmitted using the UE's cell identifier, and the UE attempts to receive the PDCCH using the temporary C-RNTI included in the random access response if the identifier is its unique identifier. Thereafter, in the former scheme, if the PDCCH is received through its own cell identifier before the contention resolution timer is expired, the UE determines that the random access procedure has been normally performed and completes the random access procedure. In the latter scheme, if the PDCCH is received through the temporary C-RNTI before the contention resolution timer has expired, the UE checks data transferred by the PDSCH indicated by the PDCCH. If the unique identifier of the UE is included in the data, the UE determines that the random access procedure has been normally performed and completes the random access procedure.

Hereinafter, the LTE system, by way of example, a uplink Hybrid Automatic Repeat Request (HARQ) scheme of a MAC layer will be described, concentrating on the transmission of uplink data.

FIG. **6** is a view illustrating an HARQ scheme.

A UE may receive UL Grant information or UL scheduling information from an eNode B on a PDCCH (step S**601**), in order to transmit data to the eNode B by the HARQ scheme. In general, the UL scheduling information may include a UE identifier (e.g., a C-RNTI or a Semi-Persistent Scheduling C-RNTI), resource block assignment, transmission parameters (modulation, coding scheme and redundancy version), and a New Data Indicator (NDI). In the LTE system, the UE has eight HARQ processes and the HARQ processes are synchronously performed with Transmission Time Intervals (TTIs). That is, specific HARQ processes may be sequentially assigned according to points in time when data is received, in a manner of using the first HARQ process at TTI **9** and using the second HARQ process at TTI **10** after a first HARQ process is used at TTI **1**, a second HARQ process is used at TTI **2**, . . . , and an eighth HARQ process is used at TTI **8**.

In addition, since the HARQ processes are synchronously assigned as described above, a HARQ process connected to a TTI in which a PDCCH for initial transmission of specific data is received is used for the transmission of the data. For example, if it is assumed that the UE has received a PDCCH including UL scheduling information at an Nth TTI, the UE transmits data at an $(N+4)^{th}$ TTI. In other words, a Kth HARQ process assigned at the $(N+4)^{th}$ TTI is used for the transmission of the data. That is, the UE may transmit the data to the eNode B on a PUSCH according to the UL scheduling information after checking the UL scheduling information transmitted to the UE by monitoring the PDCCH at every TTI (step S**602**).

When the data has been received, the eNode B stores the data in a soft buffer and attempts to decode the data. The eNode B transmits an ACK signal if the decoding of the data succeeds and transmits an NACK signal if the decoding of the data fails. An example in which the decoding of the data fails and the eNode B transmits the NACK signal on a Physical HARQ Indicator Channel (PHICH) is shown in FIG. **6** (step S**603**).

When the ACK signal has been received from the eNode B, the UE determines that the transmission of the data to the eNode B succeeds and transmits next data. However, when the UE receives the NACK signal as shown in FIG. **6**, the UE may determine that the transmission of the data to the eNode B has failed and retransmit the same data by the same scheme or a new scheme (step S**604**).

The HARQ retransmission of the UE may be performed by a non-adaptive scheme. That is, the initial transmission of specific data may be performed when the PDCCH including the UL scheduling information should be received, but the retransmission may be performed even when the PDCCH is not received. In the non-adaptive HARQ retransmission, the data is retransmitted using the same UL scheduling information as the initial transmission at a TTI at which a next HARQ process is assigned, without receiving the PDCCH.

The HARQ retransmission of the UE may be performed by an adaptive scheme. In this case, transmission parameters for retransmission are received on the PDCCH, but the UL scheduling information included in the PDCCH may be different from that of the initial transmission according to channel statuses. For example, if the channel status is better than that of the initial transmission, transmission may be performed at a high bit rate. In contrast, if the channel status is worse than that of the initial transmission, transmission may be performed at a lower bit rate than that of the initial transmission.

If the UE receives the UL scheduling information on the PDCCH, it is determined whether data which should be transmitted at this time is data which is initially transmitted or previous data which is retransmitted, by an NDI field included in the PDCCH. The NDI field is toggled in the order of 0, 1, 0, 1, . . . whenever new data is transmitted as described above, and the NDI field of the retransmission has the same value as that of the initial transmission. Accordingly, the UE may compare the NDI field with the previously transmitted value so as to determine whether or not the data is retransmitted.

The UE counts the number of times of transmission (CURRENT_TX_NB) whenever data is transmitted by the HARQ scheme, and deletes the data stored in the HARQ buffer when CURRENT_TX_NB has reached a maximum transmission number set in an RRC layer.

When the retransmitted data is received, the eNode B attempts to combine the received data and the data stored in the soft buffer due to the failure of the decoding by various schemes and decodes the combined data. The eNode B transmits an ACK signal to the UE if the decoding succeeds and transmits an NACK signal to the UE if the decoding fails. The eNode B repeats a process of transmitting the NACK signal and receiving the retransmitted data until the decoding of the data succeeds. In the example of FIG. **6**, the eNode B attempts to combine the data retransmitted in step S**604** and the data which is previously received and stored and decodes the combined data. The eNode B transmits the ACK signal to the UE on the PHICH if the decoding of the received data succeeds (step S**605**). The UE may transmit the UL scheduling information for the transmission of next data to the UE on the PDCCH, and may transmit the NDI toggled to 1 in order to report that the UL scheduling information is not used for the adaptive retransmission, but is used for the transmission of new data (step S**606**). The UE may transmit new data to the eNode B on the PUSCH corresponding to the received UL scheduling information (step S**607**).

The random access procedure may be triggered in the above-described cases as described above. Hereinafter, the case where the UE requests UL radio resources will be described.

FIG. **7** is a view illustrating a method of transmitting a message **3** in a random access procedure when UL radio resources are requested.

When new data is generated in a transfer buffer **601** of the UE, for example, an RLC buffer and a PDCP buffer, the UE should generally inform the eNode B of information about the generation of the data. More accurately, when data having priority higher than that of data stored in the transfer buffer of the UE is generated, the UE informs the eNode B that the data is generated.

This indicates that the UE requests radio resources to the eNode B in order to transmit the generated data. The eNode B may assign proper radio resources to the UE according to the above information. The information about the generation of the data is called a buffer status report (hereinafter, referred to as "BSR"). Hereinafter, as described above, the request for the transmission of the BSR is represented by triggering of the BSR transmission (S**6100**). If the BSR transmission is triggered, the UE should transmit the BSR to the eNode B. However, if the radio resources for transmitting the BSR are not present, the UE may trigger a random access procedure and attempt to request radio resources (S**6200**).

As described above, if the random access procedure for requesting the radio resources to the eNode B is triggered, the UE may transmit a random access preamble to the eNode B and receive a random access response message corresponding thereto as described with reference to FIGS. **4** and **5**. In addition, a message **3** (that is, a MAC PDU) including a UE identifier and a BSR may be generated and stored in a Msg**3** buffer **602**, in a MAC layer of the UE through a UL Grant signal included in the random access response message. The message **3** stored in the Msg**3** buffer **602** may be copied and stored in a HARQ process buffer **603** indicated by the UL Grant information. FIG. **7** shows, by way of example, the case where the HARQ process A is used for the transmission of the message **3**. Thus, the message **3** is copied to the HARQ buffer **603** corresponding to the HARQ process A. The message **3** stored in the HARQ buffer **603** may be transmitted to the eNode B on a PUSCH.

Meanwhile, if the UE should perform retrial of the random access procedure due to contention resolution failure, the UE may transmit the random access preamble to the eNode B again and receive a random access response (S**6300**). However, in the retried random access procedure, the UE uses the message **3** stored in the Msg**3** buffer **602** again, without generating a new message **3**. That is, the UE may copy and store the MAC PDU corresponding to the message **3** stored in the Msg**3** buffer **602** in a HARQ buffer **604**, and transmit the MAC PDU, according to the UL Grant signal included in the random access response received in the retried random access procedure. FIG. **7** shows the case where the reattempted random access procedure is performed by a HARQ process B. The data stored in the Msg**3** buffer **602** may be copied into the HARQ buffer B and transmitted.

As described above, if the random access response is received while the random access procedure is performed, the UE stores the message **3** stored in the Msg**3** buffer in the HARQ buffer and transmits the message **3**. As described above, in the current the LTE system standard for the HARQ process, it is defined that the transmission of the data stored in the Msg**3** buffer is triggered by the reception of any UL Grant signal. Accordingly, the CR timer may be erroneously driven such that an erroneous contention resolution process is performed. Due to the erroneous contention resolution procedure, the above-described BSR may not be normally transmitted and the UE may come to deadlock. This problem will be described in detail with reference to FIG. **8**.

FIG. **8** is a view illustrating a problem which may occur when data stored in a Msg**3** buffer is transmitted by an Uplink (UL) Grant signal received on a message other than a random access response message.

As described with reference to FIG. **7**, the UE may trigger the BSR when high priority data is generated, transmit the random access preamble in order to transmit the BSR to the eNode B (S**801**), and receive the random access response corresponding thereto (S**802**).

Thereafter, the UE may transmit a message **3** including the BSR via UL Grant information included in the random access response message received in step S**802** (S**803**). If the message **3** is transmitted, the CR timer is operated as described with reference to FIG. **5**.

If the random access procedure is completed before the CR timer expires, the UE determines that the random access procedure has not been successfully completed (S**804**). In this case, the UE may try to restart the random access procedure from the transmission of the random access preamble.

At this time, since the eNode B does not yet know that the UE is performing the random access procedure, the eNode B may transmit a UL Grant signal independent of the random access procedure on a masked PDCCH (S**805**). In this case, according to the current LTE system standard, the UE transmits the message **3** stored in the Msg**3** buffer according to the UL Grant signal received on the PDCCH in step S**805** (S**806**). In addition, when the message **3** is transmitted, the CR timer is restarted. That is, even when the UE does not perform the transmission of the random access preamble and the reception of the random access response message, the CR timer is restarted in step S**806**.

Although the CR timer is started as the UE transmits the message **3** in step S**806**, the eNode B may not know that the UE is performing the random access procedure because the reception of the random access preamble and the transmission of the random access response message are not performed. If another UL Grant signal is received on the PDCCH including the UE identifier (S**807**), the UE determines that the ongoing random access procedure is successfully completed. Accordingly, the UE may stop the ongoing CR time (S**808**).

If the message **3** transmitted to the eNode B in step S**806** is not successfully received by the eNode B (A), the UE no

longer transmits the message **3** including the BSR. Accordingly, if additional data is not generated, the UE may not transmit the data generated in the transfer buffer to the eNode B.

The above-described problem will be described as follows.

According to the current LTE system standard, if the UL Grant signal is received in a state in which the data is stored in the Msg**3** buffer, the UE transmits the data stored in the Msg**3** buffer to the eNode B. At this time, the UL Grant signal may be transmitted by the eNode B, not for the transmission of the data stored in the Msg**3** buffer, but for the transmission of other data. Accordingly, the CR timer may be erroneously started.

In addition, if the eNode B does not know that the CR timer is erroneously started in the UE and transmits the UL Grant signal for the transmission of other data as described with reference to FIG. **8**, information (e.g., BSR) to be transmitted through the message **3** may be lost.

In addition, the UE may not receive a message **4** for completing a proper contention resolution procedure even with respect to the ongoing random access procedure.

In a preferred embodiment of the invention for solving the above-described problem, the data stored in the Msg**3** buffer is restrictively transmitted only in the case where the UL Grant signal received from the eNode B is received on the random access response message, but not in all cases where the UL Grant signal is received from the eNode B. If the UL Grant signal is received on the masked PDCCH not by the random access response message but by the UE identifier (C-RNTI or a Semi Persistent Scheduling Radio Network Temporary Identifier (SPS-RNTI)) in a state in which the data is stored in the Msg**3** buffer, a method of acquiring and transmitting new data (MAC PDU) to the eNode B instead of the data stored in the Msg**3** buffer is suggested.

FIG. **9** is a flowchart illustrating a method of transmitting UL data by a UE according to a preferred embodiment of the present invention. In more detail, FIG. **9** shows the operation of a HARQ entity of the UE according to an embodiment of the present invention at every TTI.

First, the HARQ entity of the UE may identify a HARQ process associated with a TTI (S**901**). If the HARQ process associated with the TTI is identified, the HARQ entity of the UE may determine whether or not a UL Grant signal received from the eNode B indicated at the TTI (S**902**). The UE may determine whether or not a HARQ buffer corresponding to the HARQ process is empty if there is no information about the received UL Grant signal at the TTI, and perform non-adaptive retransmission as described with reference to FIG. **6** if there is data in the HARQ buffer (S**903**).

Meanwhile, if there is a UL Grant signal received from the eNode B at the TTI, it may be determined (1) whether the UL Grant signal is not received on the PDCCH indicated by the temporary C-RNTI and the NDI is toggled from the value during transmission prior to the HARQ process, (2) whether there is previous NDI and this transmission is initial transmission of the HARQ process, (3) whether the UL Grant signal is received on the PDCCH indicated by the C-RNTI and the HARQ buffer of the HARQ process is empty, or (4) whether the UL Grant signal is received on the random access response message (S**904**). If any one of the conditions (1) to (4) is satisfied in step S**904** (A), the method progresses to step S**906**. In contrast, if any one of the conditions (1) to (4) is not satisfied in step S**904** (B), the method progresses to step S**905** of performing adaptive retransmission using the UL Grant signal (S**905**).

Meanwhile, the UE determines whether there is data in the Msg**3** buffer in step S**906** (S**906**). In addition, even when there is data in the Msg**3** buffer, the UE determines whether the received UL Grant signal is received on the random access response message (S**907**). That is, the UE according to the present embodiment transmits the data stored in the Msg**3** buffer only when there is data in the Msg**3** buffer when receiving the UL Grant signal and the UL Grant signal is received on the random access response message (S**908**). If there is no data in the Msg**3** buffer when receiving the UL Grant signal or the UL Grant is not received on the random access response message, the UE determines that the eNode B makes a request not for the transmission of the data stored in the Msg**3** buffer but for transmission of new data, and performs new data transmission (S**909**). In more detail, the HARQ entity of the UE may be controlled such that a MAC PDU including new data from a multiplexing and assembly entity is acquired and is transmitted through the HARQ process.

Hereinafter, an example applied to a process of transmitting a BSR by the UE which operates by the embodiment described with reference to FIG. **9** as shown in FIG. **8** will be described.

FIG. **10** is a view illustrating a method of transmitting UL data when a BSR is triggered in a UE, according to an embodiment of the present invention.

As described above, new data may be generated in the RLC and PDCP buffers of the UE. It is assumed that the generated new data has higher priority than that of the data already stored in the RLC and PDCP buffers. The UE may trigger the BSR transmission in order to inform an eNode B of information about the generation of the data (step **1**).

The UE should transmit the BSR according to BSR transmission trigger, but, in a special case, there may be no radio resource for transmitting the BSR. In this case, the UE may trigger a random access procedure for transmitting the BSR. It is assumed that the random access procedure triggered in the present embodiment is the contention based random access procedure described with reference to FIG. **5**.

The UE may transmit a random access preamble to the eNode B according to the triggering of the random access procedure (step **2**).

The eNode B may receive the random access preamble transmitted by the UE and transmit a random access response message to the UE (step **3**). The UE may receive the random access response message.

The UE may generate a message **3** including the BSR and a UE identifier according to a UL Grant signal included in the random access response message received in step **3** and store the message **3** in a Msg**3** buffer (step **4**).

The UE may select a HARQ process according to the UL Grant information included in the random access response message received in step **3** and copy and store the message **3** stored in the Msg**3** buffer in the buffer corresponding to the selected HARQ process. Thereafter, the data stored in the HARQ buffer may be transmitted to the eNode B according to the UL HARQ procedure described with reference to FIG. **6** (step **5**). The UE starts (or restarts) the CR timer by the transmission of the message **3**.

When the CR timer expires, the UE may perform retrial of the random access procedure. That is, a random access preamble and a PRACH resource may be prepared to be selected and transmitted to the eNode B. However, in a state in which the CR timer is not operated, the UE may receive the UL Grant signal from the eNode B on a PDCCH masked by a UE identifier (step **6**).

When the UL Grant signal has been received on the PDCCH in step **6**, the UE generates new data different from the data stored in the Msg**3** buffer according to the UL Grant

information received in step **6** as a new MAC PDU, unlike the procedure of the embodiment of FIG. **8** for transmitting the message **3** stored in the Msg**3** buffer according to the UL Grant information received in step **6** (step **7**). In more detail, if the UE receives the UL Grant signal in step **6** but does not receive the UL Grant signal on the random access response message, a MAC PDU for transmitting not the data stored in the Msg**3** buffer but new data from a multiplexing and assembly entity may be acquired and transmitted using a HARQ process corresponding thereto.

After the new MAC PDU is generated, the UE according to the present embodiment may select a HARQ process according to the UL Grant signal received in step **6**, store the MAC PDU newly generated in step **7** in the buffer corresponding to the HARQ process, and transmit the MAC PDU to the eNode B according to the UL HARQ procedure (step **8**).

Thereafter, the UE may perform a random access procedure including the transmission of the random access preamble and the reception of the random access response and transmit the BSR stored in the Msg**3** buffer to the eNode B.

According to the above-described embodiment, it is possible to prevent the eNode B from erroneously operating the CR timer due to the UL Grant signal transmitted not for transmission of the data stored in the Msg**3** buffer but for transmission of new data. Accordingly, the problem that the message **3** is lost may be solved. In addition, the random access procedure of the UE with the eNode B may be normally performed.

Unlike the above-described embodiment, as another embodiment of the present invention, a method of performing a process while ignoring the UL Grant signal if the UL Grant signal is received from the eNode B on the PDCCH masked by the UE identifier during the random access procedure of the UE may be implemented. In this case, the UE may transfer the message **3** to the eNode B by the normal random access procedure, and the eNode B may retransmit the UL Grant signal for the transmission of new data after the random access procedure of the UE is completed.

Hereinafter, the configuration of the UE for implementing the above-described embodiment of the present invention will be described.

FIG. **11** is a schematic view showing the configuration of a UE according to an embodiment of the present invention.

As shown in FIG. **11**, the UE according to the present embodiment may include a reception (Rx) module **1101** for receiving a UL Grant signal from an eNode B on a specific message, a transmission (TX) module **1102** for transmitting data to the eNode B using the received UL Grant signal, a Msg**3** buffer **1103** for storing UL data transmitted in a random access procedure, and a HARQ entity **1104** for controlling the transmission of UL data of the UE.

In particular, the HARQ entity **1104** of the UE according to the present embodiment performs a function of determining whether there is data stored in the Msg**3** buffer **1103** when the Rx module **1101** receives the UL Grant signal and a function of determining whether the Rx module **1101** receives the UL Grant signal on a random access response message. If there is data stored in the Msg**3** buffer **1103** when the Rx module **1101** receives the UL Grant signal and the RX module **1101** receives the UL Grant signal on the random access response message, the data stored in the Msg**3** buffer **1103** is controlled to be acquired and transmitted to the eNode B. If there is no data stored in the Msg**3** buffer **1103** when the Rx module **1101** receives the UL Grant signal and the RX module **1101** receives the UL Grant signal not on the random access response message but on the PDCCH, the data stored in the Msg**3** buffer **1103** is not transmitted but new data is acquired from the multiplexing and assembly entity in the form of a MAC PDU and is transmitted to the eNode B.

In addition, in order to perform the UL HARQ procedure, the UE according to the present embodiment may include one or more HARQ processes **1106** and HARQ buffers **1107** corresponding to the HARQ processes **1106**. In the current LTE system, eight independent HARQ processes are defined for use, but the present invention is not limited thereto.

Meanwhile, the HARQ entity **1104** according to the present embodiment may transfer the data acquired from the multiplexing and assembly entity **1105** or the msg**3** buffer **1103** to a specific HARQ process **1106** using the above-described configuration, and control the specific HARQ process **1106** to transmit the data acquired from the multiplexing and assembly entity **1105** or the Msg**3** buffer **1103** through the Tx module **1102**. As described above, if the specific HARQ process **1106** transmits the data stored in the Msg**3** buffer **1103** through the Tx module **1102** as described above, the data stored in the Msg**3** buffer **1103** may be copied into the specific HARQ buffer **1107** corresponding to the specific HARQ process **1106** and the data copied into the specific HARQ buffer **1107** may be transmitted through the Tx module **1102**.

At this time, the data stored in the Msg**3** buffer **1103** is a MAC PDU including a UE identifier and may further include information such as a BSR according to the purpose of the random access procedure.

In the configuration of the UE shown in FIG. **11**, the Tx module **1102** and the Rx module **1101** may be configured as a physical layer processing module **1108**, and the HARQ entity **1104**, the multiplexing and assembly entity **1105** and one or more HARQ processes **1106** may be configured as a MAC layer module **1109**. However, the invention is not limited thereto. In addition, the Msg**3** buffer **1103** and the HARQ buffers **1107** corresponding to the HARQ processes **1106** may be implemented using any storage medium.

Although the signal transmission or reception technology and the UE for the same are applied to a 3GPP LTE system, they are applicable to various mobile communication systems having a similar procedure, in addition to the 3GPP LTE system.

It will be apparent to those skilled in the art that various modifications and variations can be made in the present invention without departing from the spirit or scope of the invention. Thus, it is intended that the present invention covers the modifications and variations of this invention provided they come within the scope of the appended claims and their equivalents.

What is claimed is:

1. A method of transmitting data by a user equipment through an uplink, the method comprising:

receiving an uplink grant (UL Grant) signal from a base station on a specific message;

determining whether there is data stored in a message **3** (Msg**3**) buffer when receiving the UL Grant signal on the specific message;

determining whether the specific message is a random access response message;

transmitting the data stored in the Msg**3** buffer to the base station using the UL Grant signal received on the specific message, if there is data stored in the Msg**3** buffer when receiving the UL Grant signal on the specific message and the specific message is the random access response message; and

transmitting new data to the base station in correspondence with the UL Grant signal received on the specific message, if there is no data stored in the Msg**3** buffer when

receiving the UL Grant signal on the specific message or the specific message is not the random access response message.

2. The method according to claim **1**, wherein the transmitting the new data to the base station includes:

acquiring a Medium Access Control Protocol Data Unit (MAC PDU) from a multiplexing and assembly entity; and

transmitting the MAC PDU to the base station.

3. The method according to claim **1**, wherein the UL Grant signal received on the specific message is a UL Grant signal received on a Physical Downlink Control Channel (PDCCH), and

wherein the user equipment transmits new data in correspondence with the UL Grant signal received on the PDCCH.

4. The method according to claim **1**, wherein the data stored in the Msg**3** buffer is a Medium Access Control Protocol Data Unit (MAC PDU) including a user equipment identifier.

5. The method according to claim **4**, wherein the data stored in the Msg**3** buffer further includes information about a buffer status report (BSR) if the user equipment starts a random access procedure for the BSR.

6. The method of claim **1**, wherein the UL Grant signal received on the specific message is either a UL Grant signal received on a Physical Downlink Control Channel (PDCCH) or a UL Grant signal received on the random access response message.

7. A user equipment, comprising:

a reception module adapted to receive an uplink grant (UL Grant) signal from a base station on a specific message;

a transmission module adapted to transmit data to the base station using the UL Grant signal received on the specific message;

a message **3** (Msg**3**) buffer adapted to store UL data to be transmitted in a random access procedure;

a Hybrid Automatic Repeat Request (HARQ) entity adapted to determine whether there is data stored in the Msg**3** buffer when the reception module receives the UL Grant signal and the specific message is a random access response message, acquiring the data stored in the Msg**3** buffer if there is data stored in the Msg**3** buffer when the reception module receives the UL Grant signal and the specific message is the random access response message, and controlling the transmission module to transmit the data stored in the Msg**3** buffer to the base station using the UL Grant signal received by the reception module on the specific message; and

a multiplexing and assembly entity used for transmission of new data,

wherein the HARQ entity acquires the new data to be transmitted from the multiplexing and assembly entity if there is no data stored in the Msg**3** buffer when the reception module receives the UL Grant signal on the specific message or the received message is not the random access response message, and controls the transmission module to transmit the new data acquired from the multiplexing and assembly entity using the UL Grant signal received by the reception module on the specific message.

8. The user equipment according to claim **7**, further comprising:

one or more HARQ processes; and

HARQ buffers respectively corresponding to the one or more HARQ processes,

wherein the HARQ entity transfers the data acquired from the multiplexing and assembly entity or the Msg**3** buffer to a specific HARQ process of the one or more HARQ processes and controls the specific HARQ process to transmit the data acquired from the multiplexing and assembly entity or the Msg**3** buffer through the transmission module.

9. The user equipment according to claim **8**, wherein, when the specific HARQ process transmits the data stored in the Msg**3** buffer through the transmission module, the data stored in the Msg**3** buffer is controlled to be copied into a specific HARQ buffer corresponding to the specific HARQ process, and the data copied into the specific HARQ buffer is controlled to be transmitted through the transmission module.

10. The user equipment according to claim **7**, wherein the UL Grant signal received by the reception module on the specific message is a UL Grant signal received on a Physical Downlink Control Channel (PDCCH), and

wherein the HARQ entity controls new data to be transmitted in correspondence with the received UL Grant signal received on the PDCCH.

11. The user equipment according to claim **7**, wherein the UL Grant signal received by the reception module on the specific message is a UL Grant signal received on a random access response message received on Physical Downlink Shared Channel (PDSCH), and

wherein the HARQ entity controls the data stored in the Msg**3** buffer to be transmitted using the UL Grant signal received on the random access response message if there is data stored in the Msg**3** buffer when the reception module receives the UL Grant signal on the random access response message.

12. The user equipment according to claim **7**, wherein the data stored in the Msg**3** buffer is a Medium Access Control Protocol Data Unit (MAC PDU) including a user equipment identifier.

13. The user equipment of claim **7**, wherein the UL Grant signal received on the specific message is either a UL Grant signal received on a Physical Downlink Control Channel (PDCCH) or a UL Grant signal received on the random access response message.

* * * * *

EXHIBIT 5

US008218481B2

(12) **United States Patent**
Kwon et al.

(10) **Patent No.: US 8,218,481 B2**
(45) **Date of Patent: Jul. 10, 2012**

(54) **METHOD OF TRANSMITTING DATA IN A MOBILE COMMUNICATION SYSTEM**

(75) Inventors: **Yeong Hyeon Kwon**, Gyeonggi-do (KR); **Seung Hee Han**, Gyeonggi-do (KR); **Hyun Hwa Park**, Gyeonggi-do (KR); **Dong Cheol Kim**, Gyeonggi-do (KR); **Hyun Woo Lee**, Gyeonggi-do (KR); **Min Seok Noh**, Gyeonggi-do (KR)

(73) Assignee: **LG Electronics Inc.**, Seoul (KR)

(*) Notice: Subject to any disclaimer, the term of this patent is extended or adjusted under 35 U.S.C. 154(b) by 135 days.

(21) Appl. No.: **12/303,947**

(22) PCT Filed: **Jun. 8, 2007**

(86) PCT No.: **PCT/KR2007/002784**

§ 371 (c)(1),
(2), (4) Date: **Jul. 7, 2010**

(87) PCT Pub. No.: **WO2007/142492**

PCT Pub. Date: **Dec. 13, 2007**

(65) **Prior Publication Data**

US 2010/0296436 A1 Nov. 25, 2010

(30) **Foreign Application Priority Data**

Jun. 9, 2006 (KR) 10-2006-0052167
Jun. 26, 2006 (KR) 10-2006-0057488

(51) **Int. Cl.**
H04L 12/50 (2006.01)

(52) **U.S. Cl.** **370/328**; 370/329; 370/330

(58) **Field of Classification Search** 370/328
See application file for complete search history.

(56) **References Cited**

U.S. PATENT DOCUMENTS

2005/0286409 A1 12/2005 Yoon et al.
2006/0153282 A1 * 7/2006 Jung et al. 375/146

FOREIGN PATENT DOCUMENTS

JP 04-035332 2/1992
JP 11-154929 6/1999

(Continued)

OTHER PUBLICATIONS

Chang et al: "Synchronization Method Based on a New Constant Envelop Preamble for OFDM Systems," IEEE Transactions on Broadcasting, vol. 51, No. 1, Mar. 2005, pp. 139-143, XP-011127926.

(Continued)

Primary Examiner — Jeffrey Pwu
Assistant Examiner — Shripal Khajuria
(74) *Attorney, Agent, or Firm* — Lee, Hong, Degerman, Kang & Waimey

(57) **ABSTRACT**

Disclosed is a data transmission method in a mobile communication system. The data transmission method through a code sequence in a mobile communication system includes grouping input data streams into a plurality of blocks consisting of at least one bit so as to map each block to a corresponding signature sequence, multiplying a signature sequence stream, to which the plurality of blocks are mapped, by a specific code sequence, and transmitting the signature sequence stream multiplied by the specific code sequence to a receiver.

16 Claims, 22 Drawing Sheets

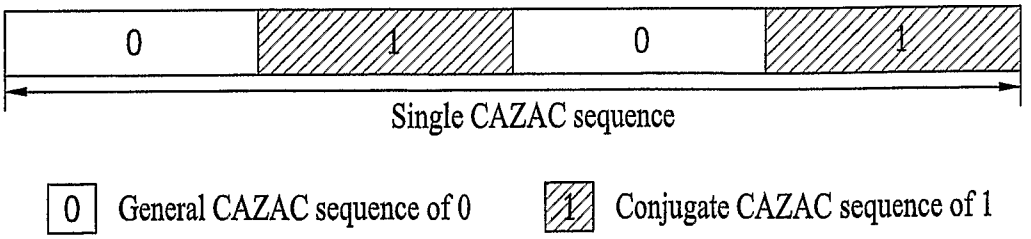

FOREIGN PATENT DOCUMENTS

JP	2000102067		4/2000
JP	2001268051		9/2001
JP	2003179576		6/2003
JP	2004512728		4/2004
JP	2004274794		9/2004
JP	2005260337		9/2005
WO	9637079	A1	11/1996
WO	01/11909	A1	2/2001
WO	2005/011128		2/2005
WO	2005/055527		6/2005
WO	2006/015108		2/2006

OTHER PUBLICATIONS

Texas Instruments: "On Allocation of Uplink Pilot Sub-Channels in EUTRA SC-FDMA," R1-050822, 3GPP TSG-RAN WG1 Ad Hoc on LTE, Aug. 2005, XP-002448008.

* cited by examiner

FIG. 1

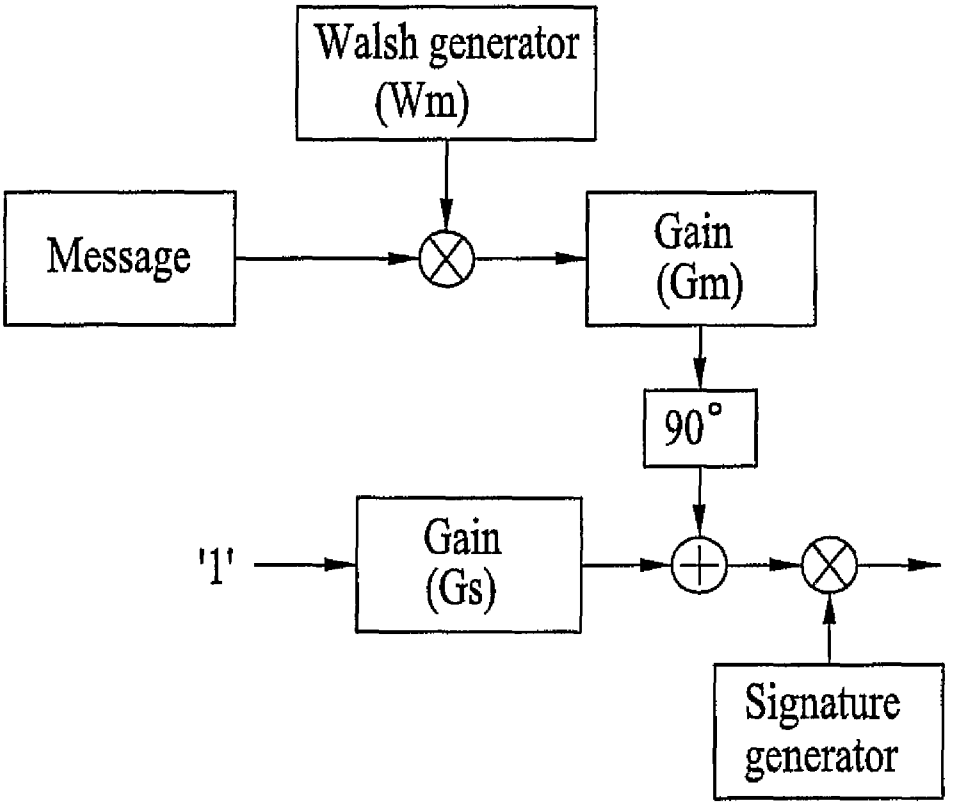
Walsh generator
(Wm)
Message
Gain
(Gm)
90°
'1'
Gain
(Gs)
Signature
generator

FIG. 2

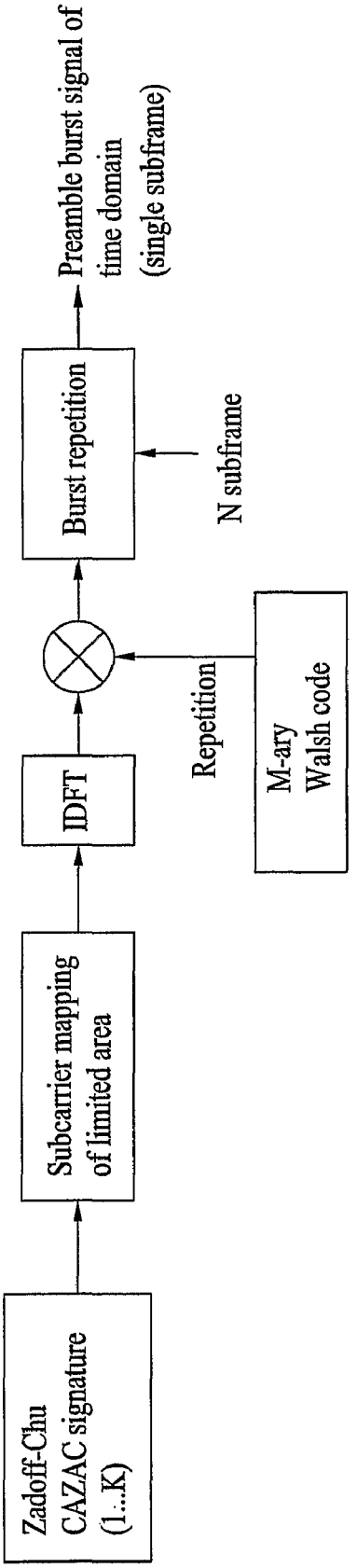
Zadoff-Chu
CAZAC signature
(1...K)
Subcarrier mapping
of limited area
IDFT
Repetition
M-ary
Walsh code
Burst repetition
N subframe
Preamble burst signal of
time domain
(single subframe)

FIG. 3A

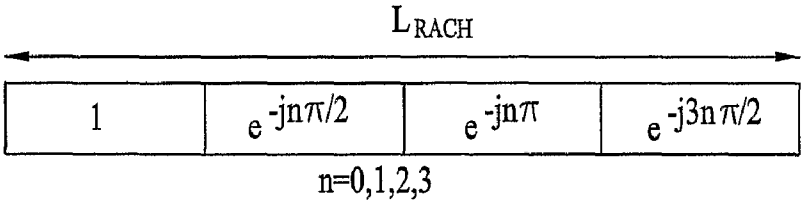

FIG. 3B

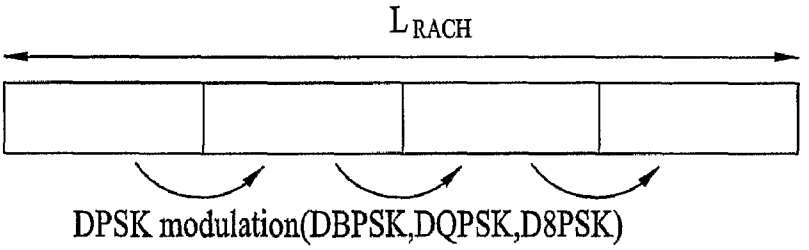

FIG. 4A

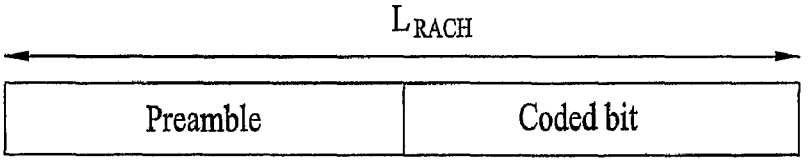

FIG. 4B

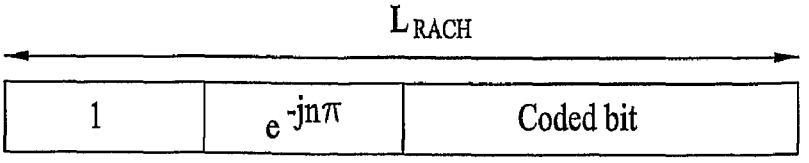

FIG. 5

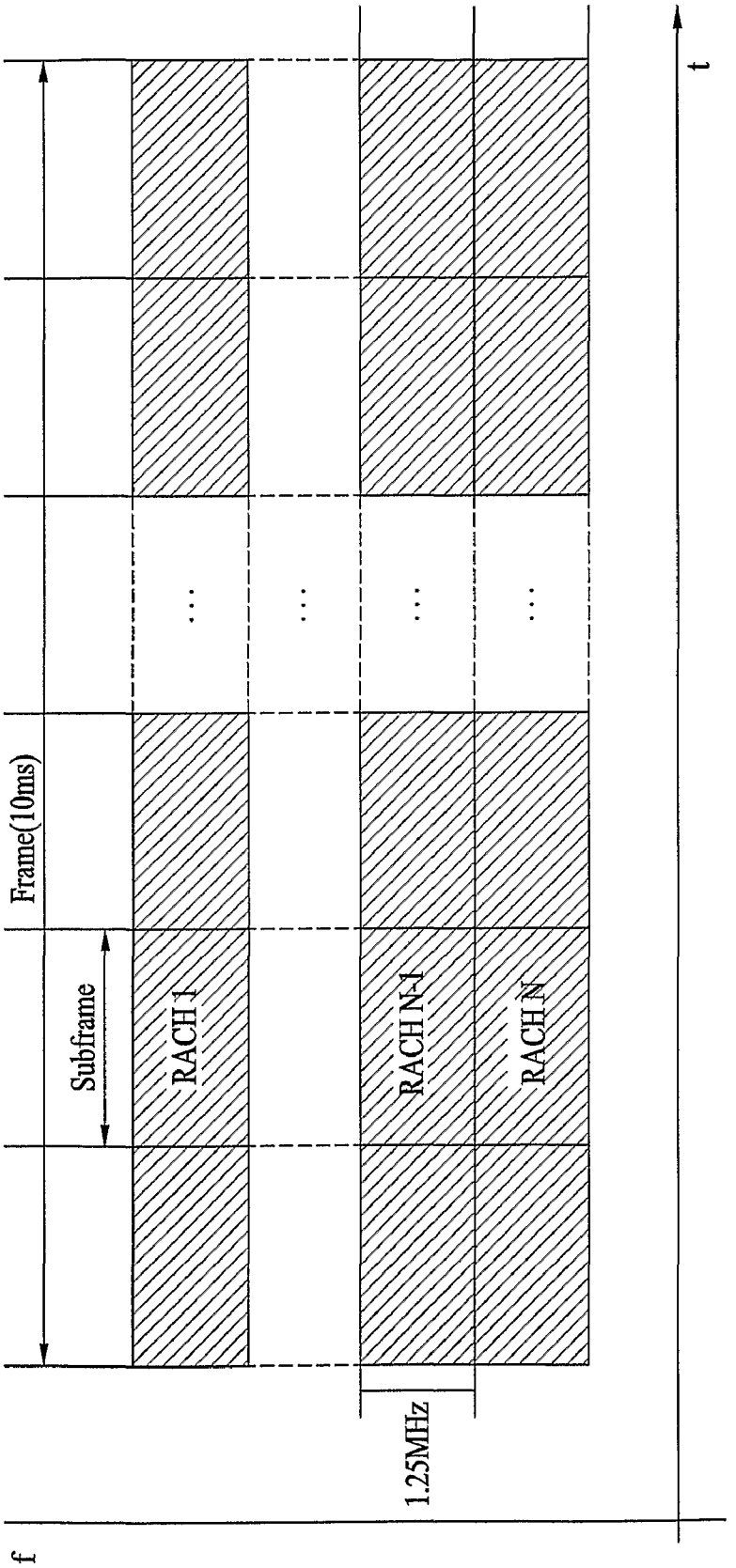

FIG. 6A

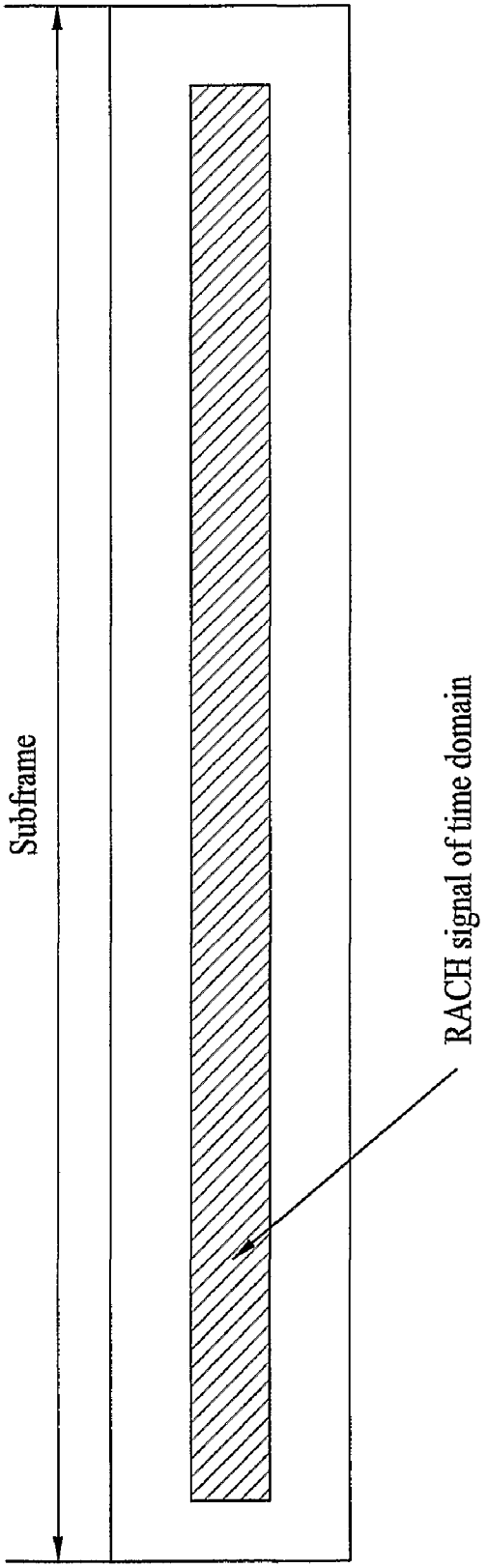

FIG. 6B

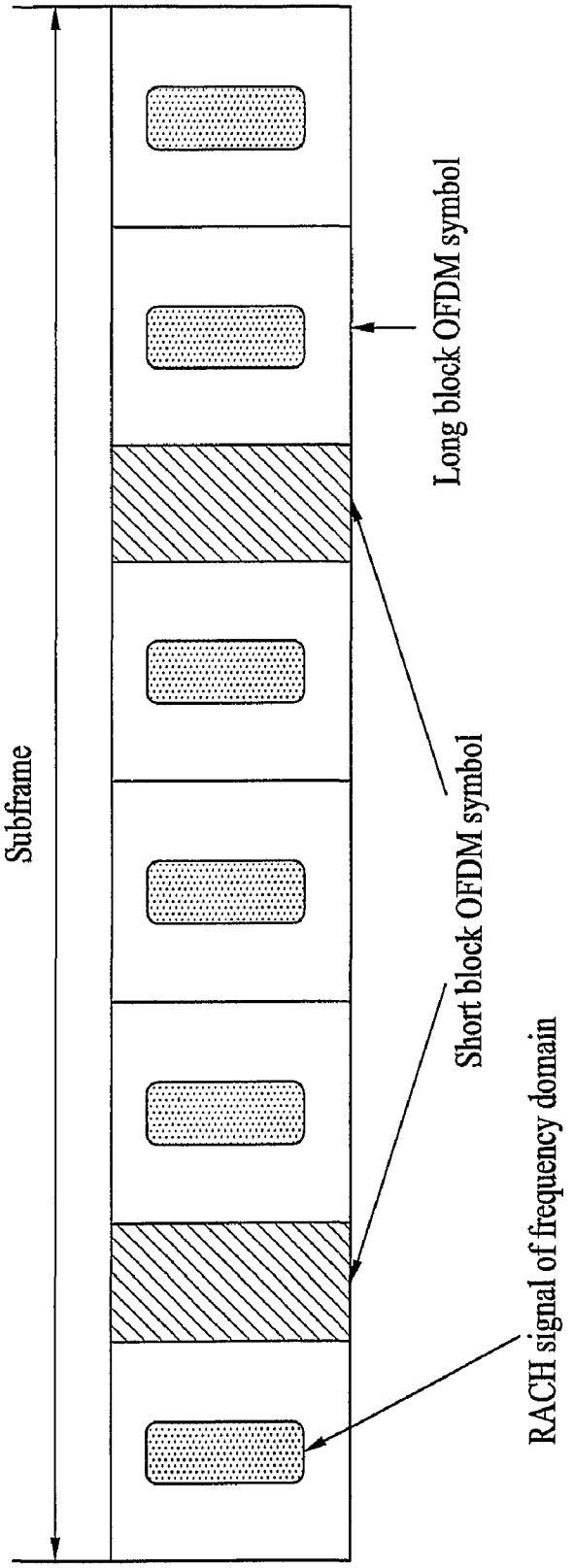
Subframe
Long block OFDM symbol
Short block OFDM symbol
RACH signal of frequency domain

FIG. 7

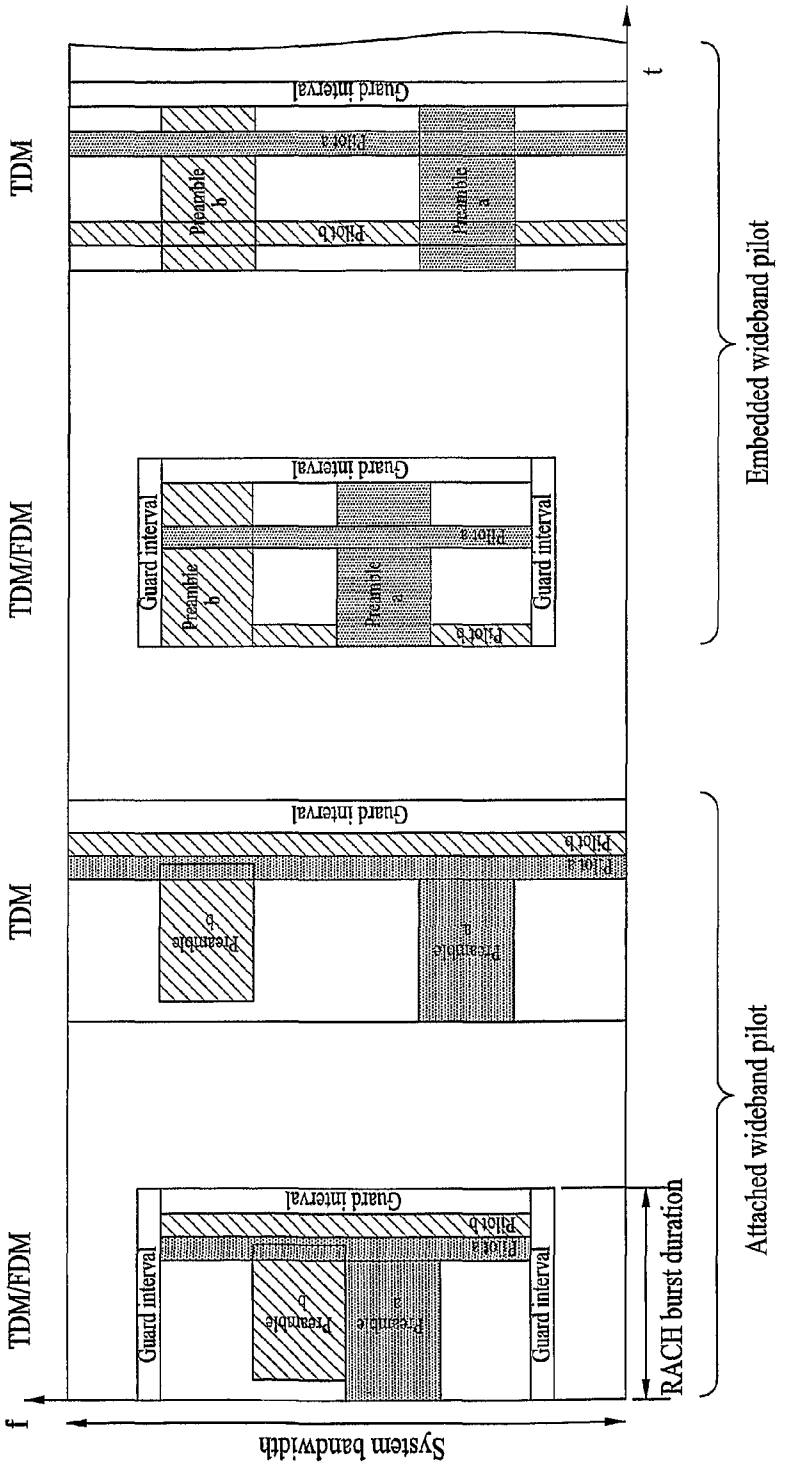
TDM/FDM
TDM
TDM/FDM
TDM
f
t
System bandwidth
Guard interval
Preamble b
Preamble a
Pilot a
Pilot b
RACH burst duration
Attached wideband pilot
Embedded wideband pilot

FIG. 8A

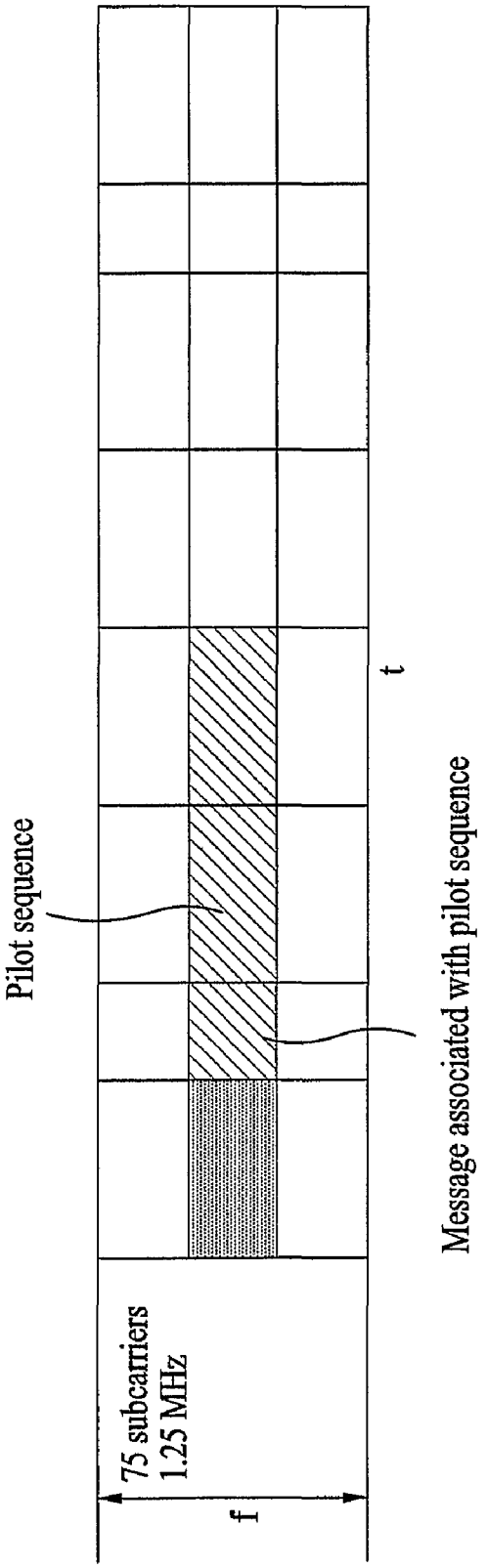
Pilot sequence
Message associated with pilot sequence
t
f
75 subcarriers
1.25 MHz

FIG. 8B

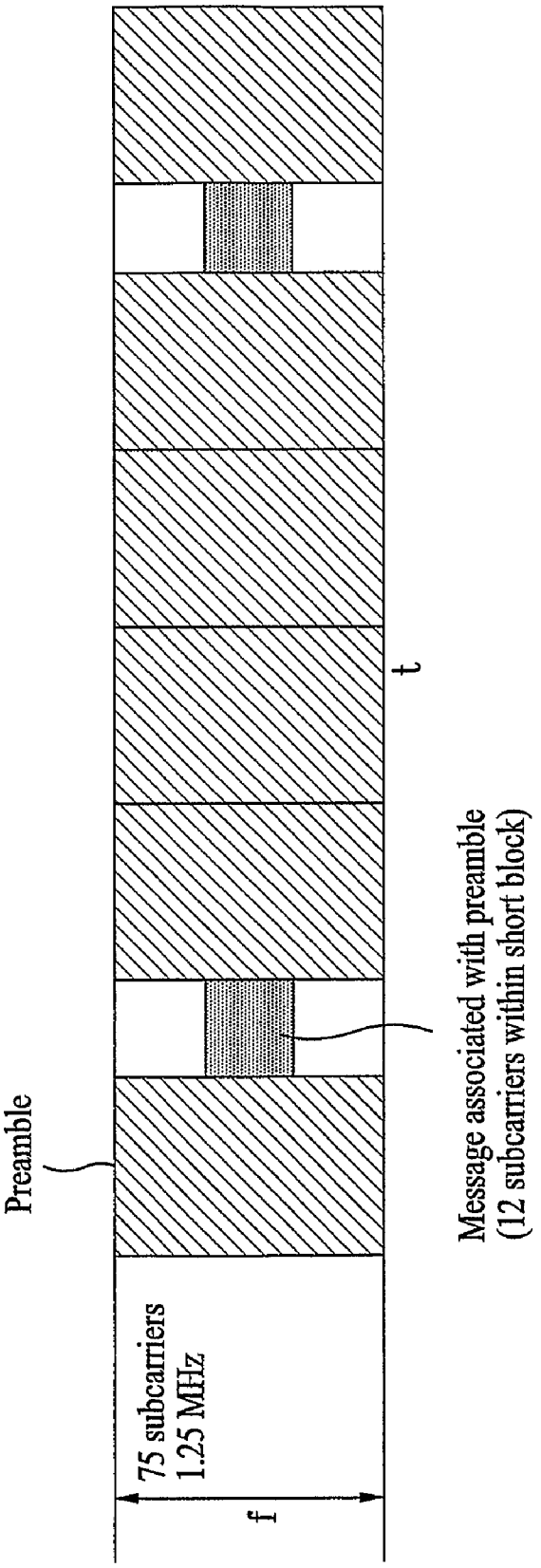
Preamble
75 subcarriers
1.25 MHz
f
t
Message associated with preamble
(12 subcarriers within short block)

FIG. 9

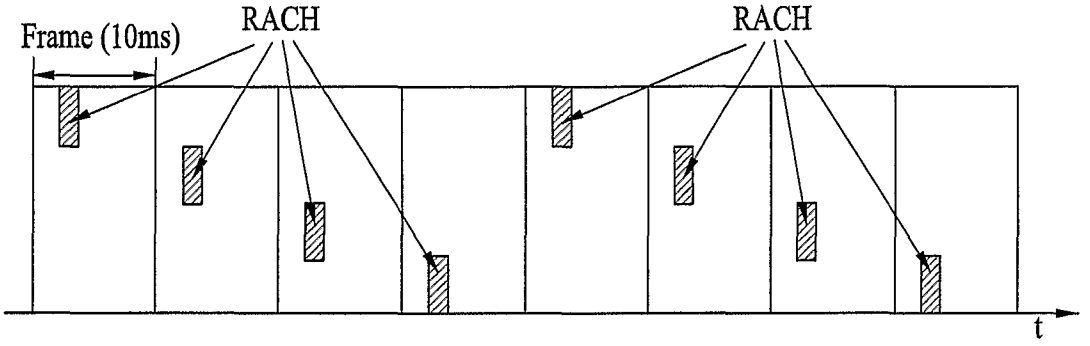

FIG. 10

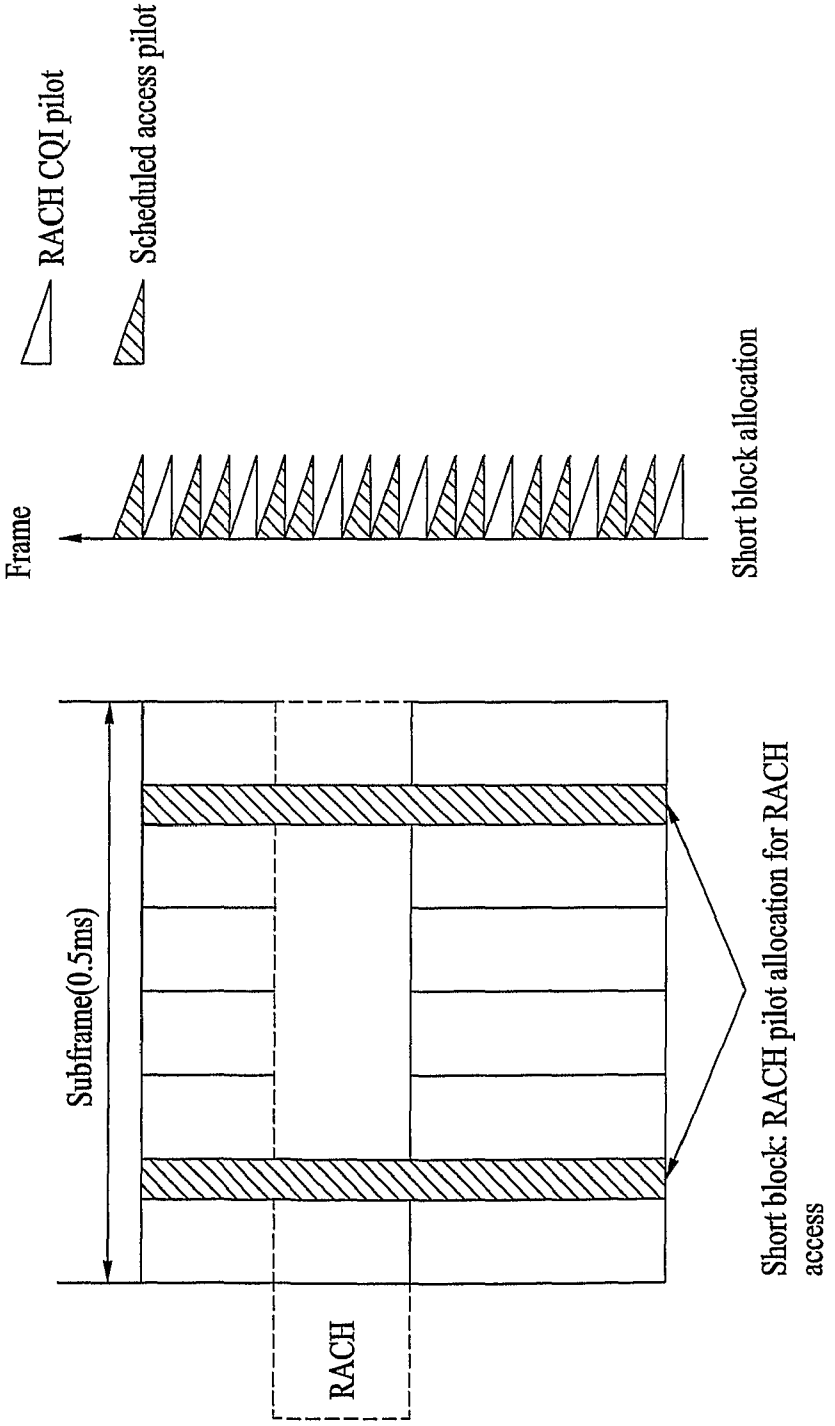
RACH CQI pilot
Scheduled access pilot
Frame
Short block allocation
Subframe(0.5ms)
RACH
Short block: RACH pilot allocation for RACH access

FIG. 11

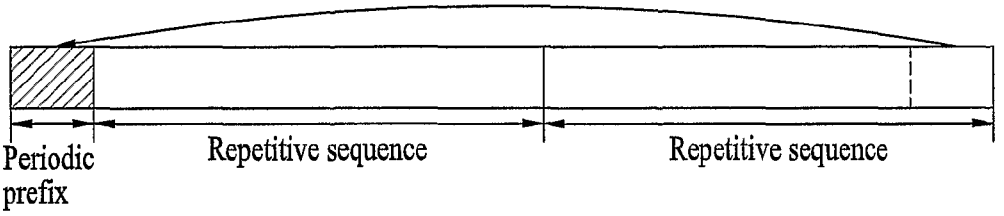
Periodic prefix
Repetitive sequence
Repetitive sequence

FIG. 12

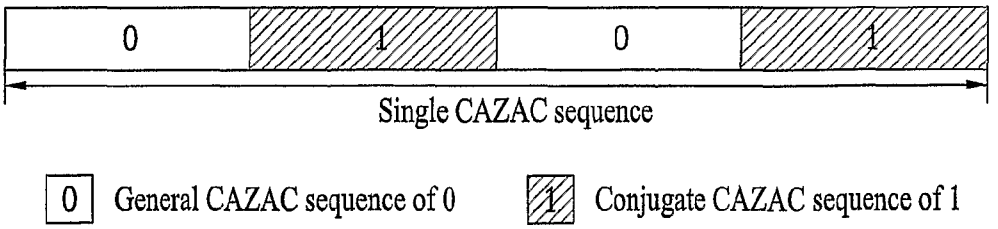
0
1
0
1
Single CAZAC sequence
0 General CAZAC sequence of 0
1 Conjugate CAZAC sequence of 1

FIG. 13

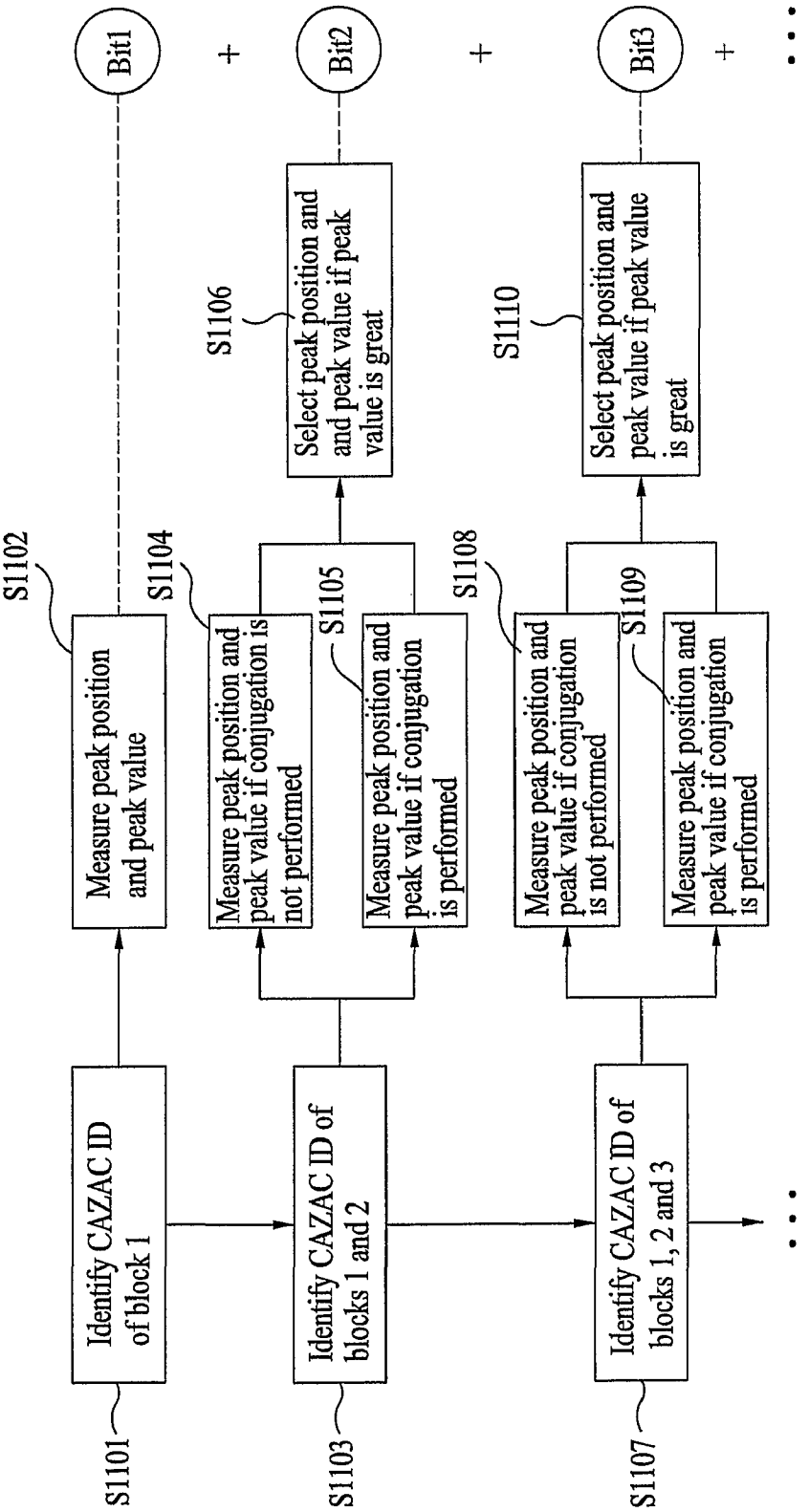
S1101
Identify CAZAC ID of block 1
S1102
Measure peak position and peak value
Bit1
+
S1103
Identify CAZAC ID of blocks 1 and 2
S1104
Measure peak position and peak value if conjugation is not performed
S1105
Measure peak position and peak value if conjugation is performed
S1106
Select peak position and and peak value if peak value is great
Bit2
+
S1107
Identify CAZAC ID of blocks 1, 2 and 3
S1108
Measure peak position and peak value if conjugation is not performed
S1109
Measure peak position and peak value if conjugation is performed
S1110
Select peak position and peak value if peak value is great
Bit3
+
...

FIG. 14

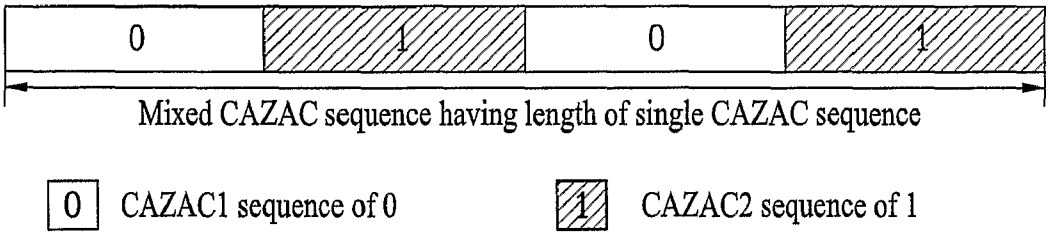
0
1
0
1
Mixed CAZAC sequence having length of single CAZAC sequence
0
CAZAC1 sequence of 0
1
CAZAC2 sequence of 1

FIG. 15

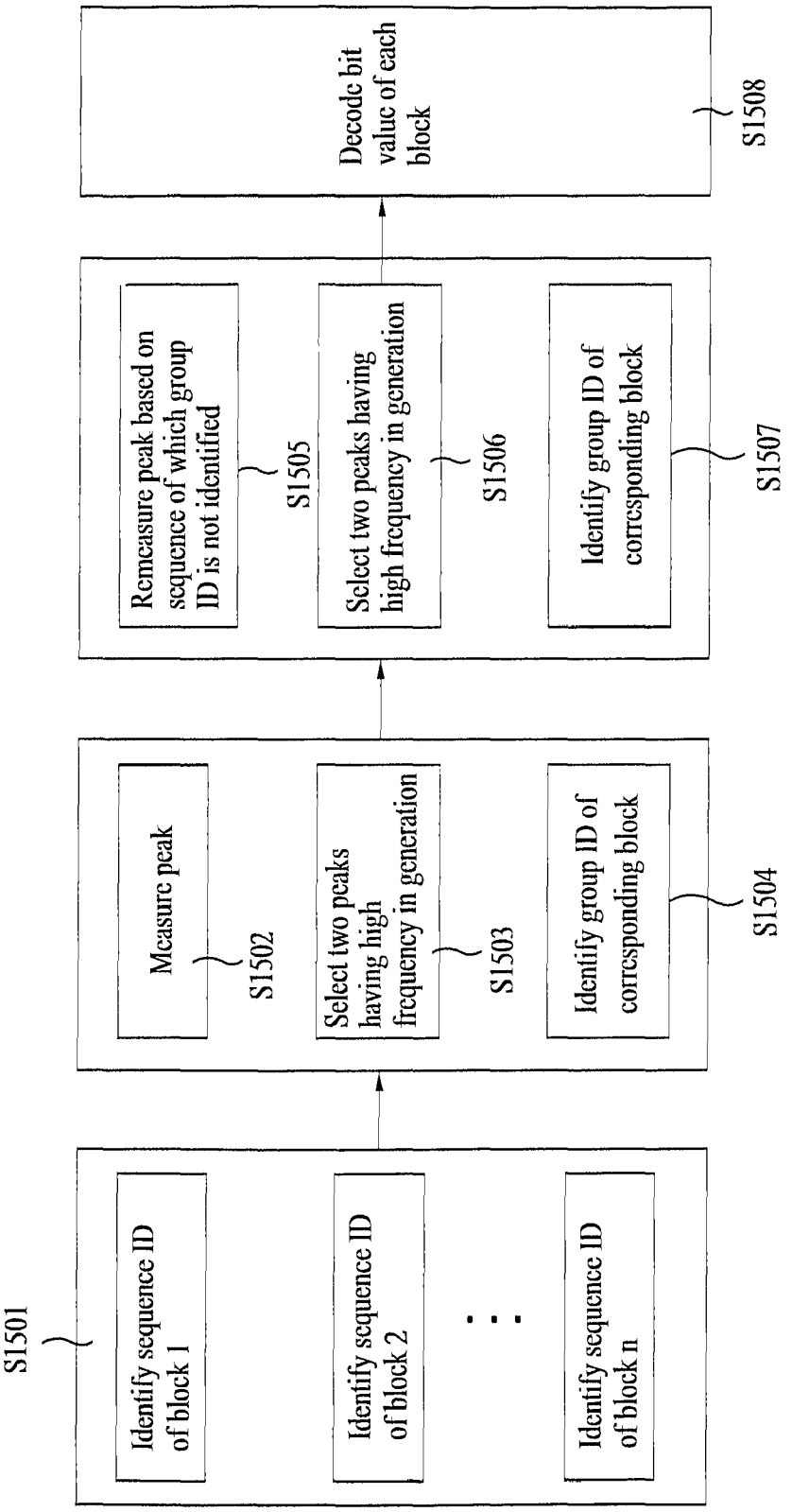
S1501
Identify sequence ID of block 1
Identify sequence ID of block 2
Identify sequence ID of block n
Measure peak
S1502
Select two peaks having high frequency in generation
S1503
Identify group ID of corresponding block
S1504
Remeasure peak based on sequence of which group ID is not identified
S1505
Select two peaks having high frequency in generation
S1506
Identify group ID of corresponding block
S1507
Decode bit value of each block
S1508

FIG. 16

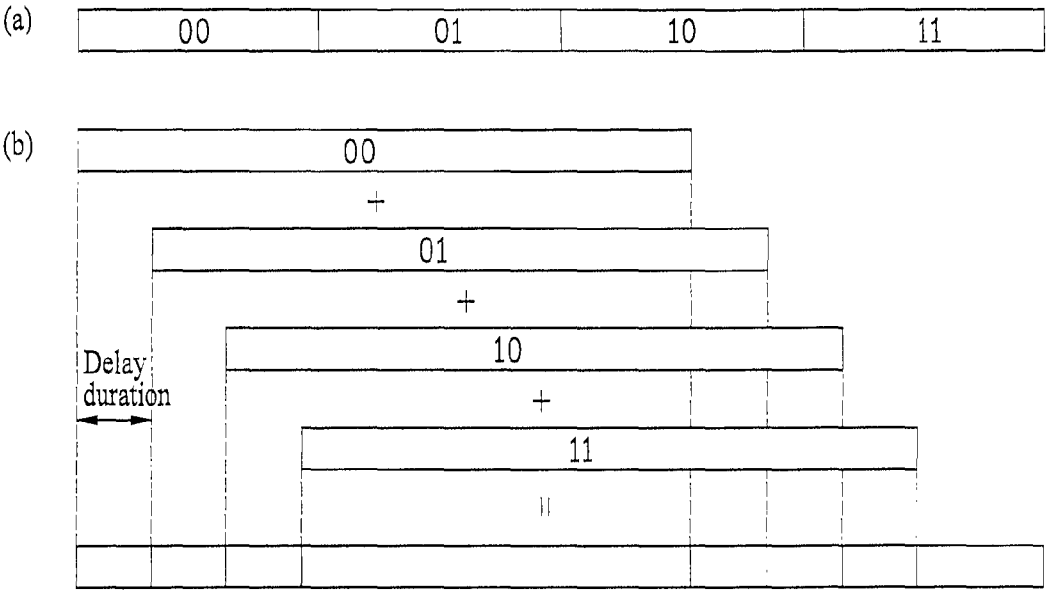

FIG. 17

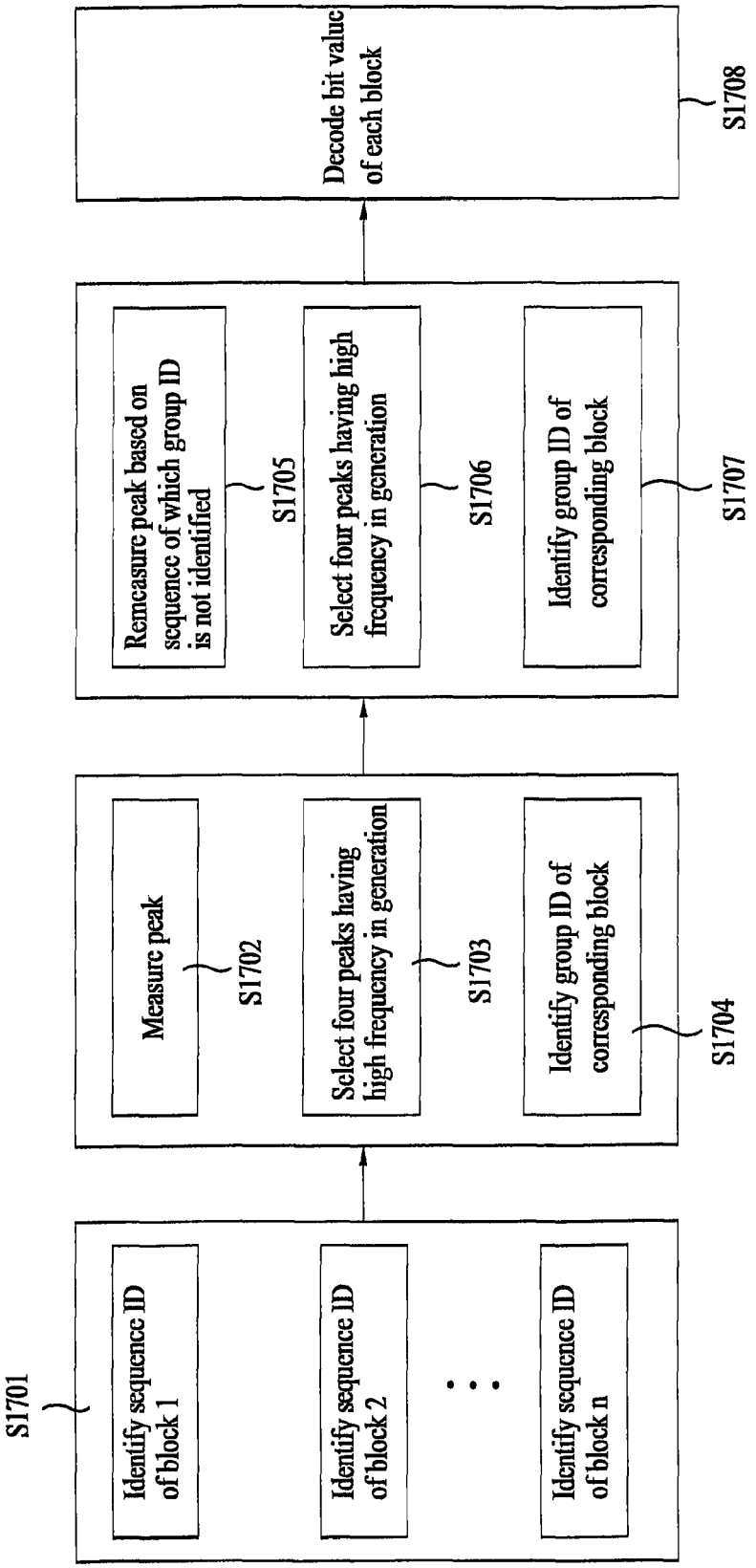
S1701
Identify sequence ID of block 1
Identify sequence ID of block 2
Identify sequence ID of block n
Measure peak
S1702
Select four peaks having high frequency in generation
S1703
Identify group ID of corresponding block
S1704
Remeasure peak based on sequence of which group ID is not identified
S1705
Select four peaks having high frequency in generation
S1706
Identify group ID of corresponding block
S1707
Decode bit value of each block
S1708

FIG. 18

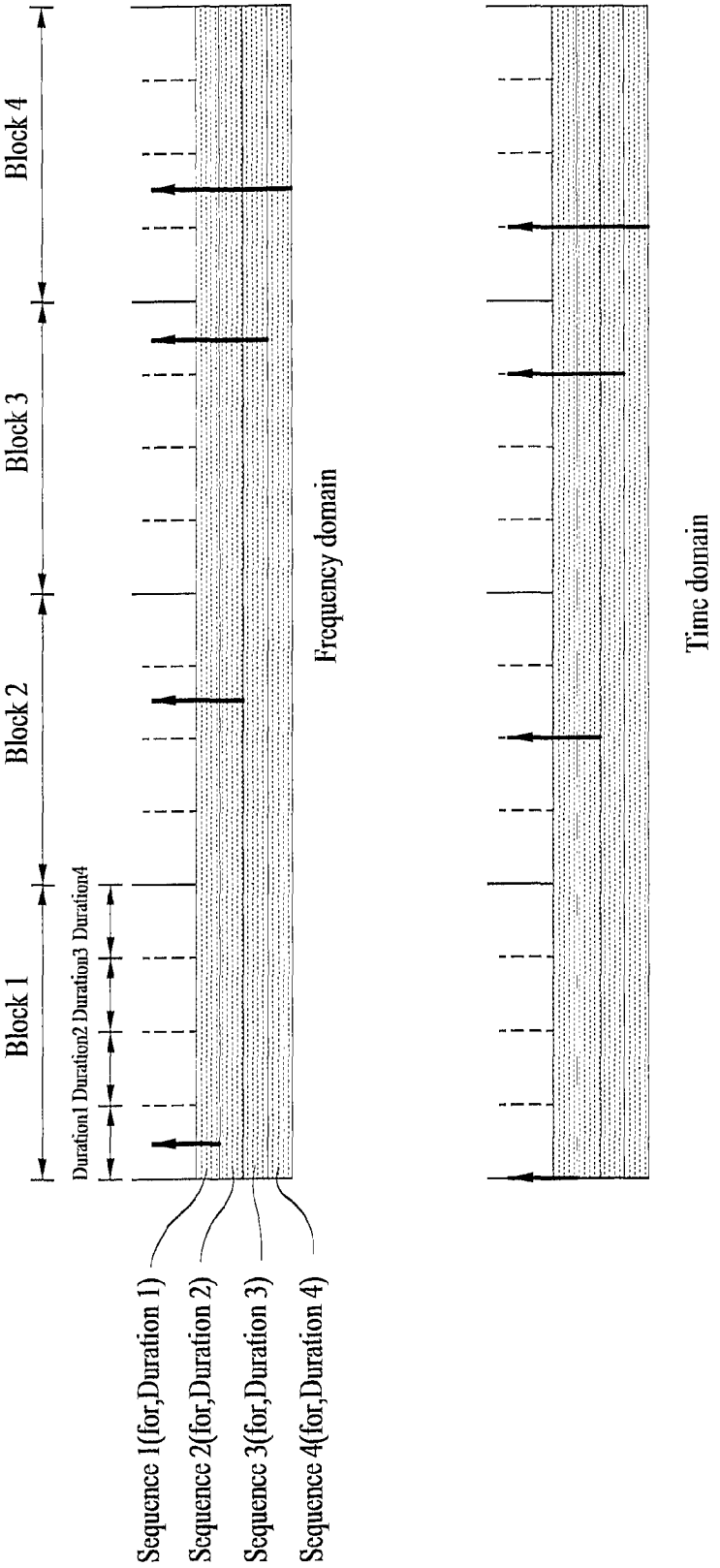
Block 1
Block 2
Block 3
Block 4
Duration1 Duration2 Duration3 Duration4
Sequence 1(for,Duration 1)
Sequence 2(for,Duration 2)
Sequence 3(for,Duration 3)
Sequence 4(for,Duration 4)
Frequency domain
Time domain

FIG. 19

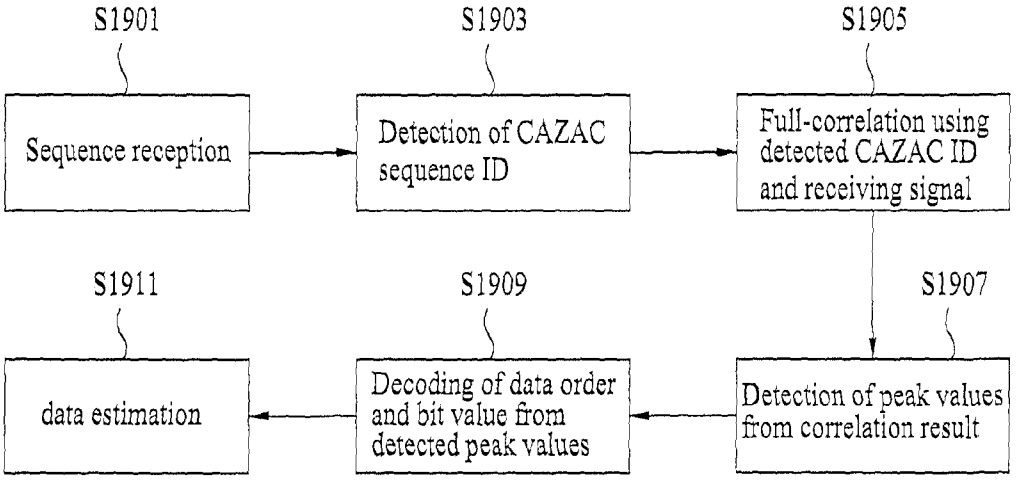
S1901
Sequence reception
S1903
Detection of CAZAC sequence ID
S1905
Full-correlation using detected CAZAC ID and receiving signal
S1907
Detection of peak values from correlation result
S1909
Decoding of data order and bit value from detected peak values
S1911
data estimation

FIG. 20A

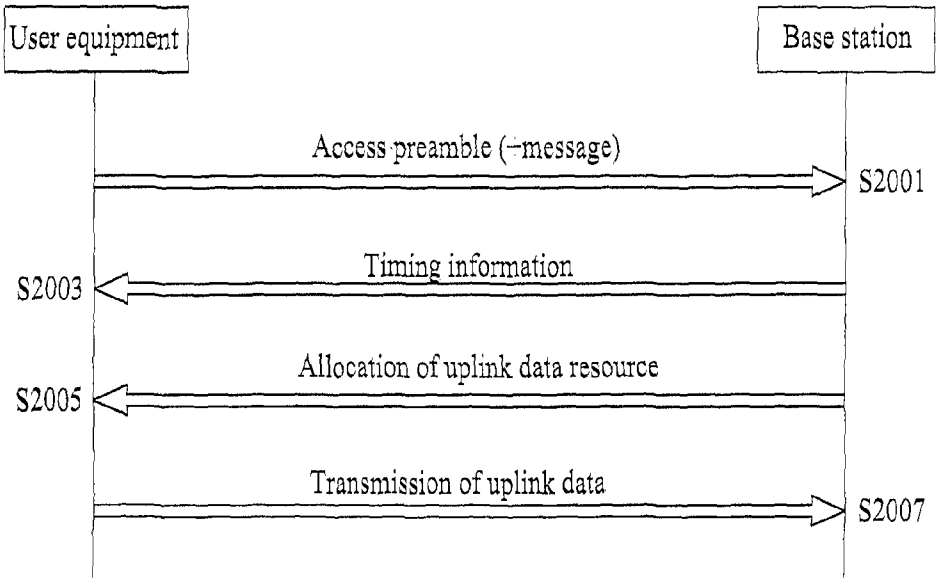

FIG. 20B

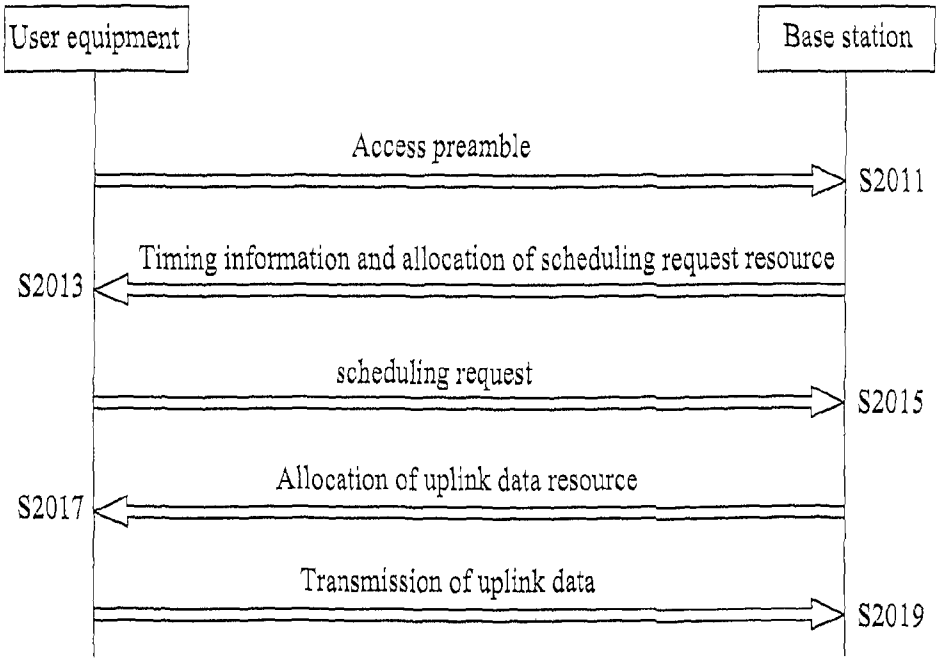

FIG. 21

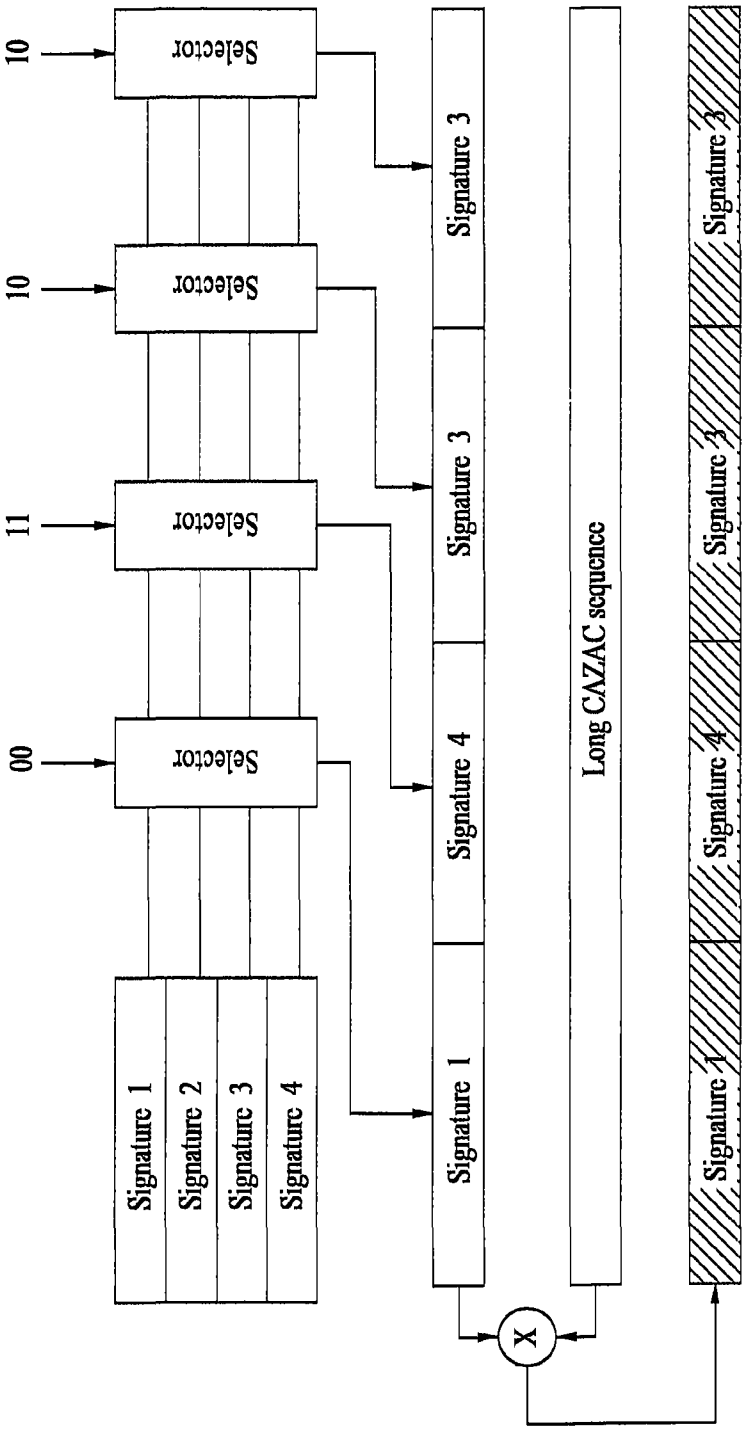
00
11
10
10
Selector
Selector
Selector
Selector
Signature 1
Signature 2
Signature 3
Signature 4
Signature 1
Signature 4
Signature 3
Signature 3
Long CAZAC sequence
X
Signature 1
Signature 4
Signature 3
Signature 3

FIG. 22

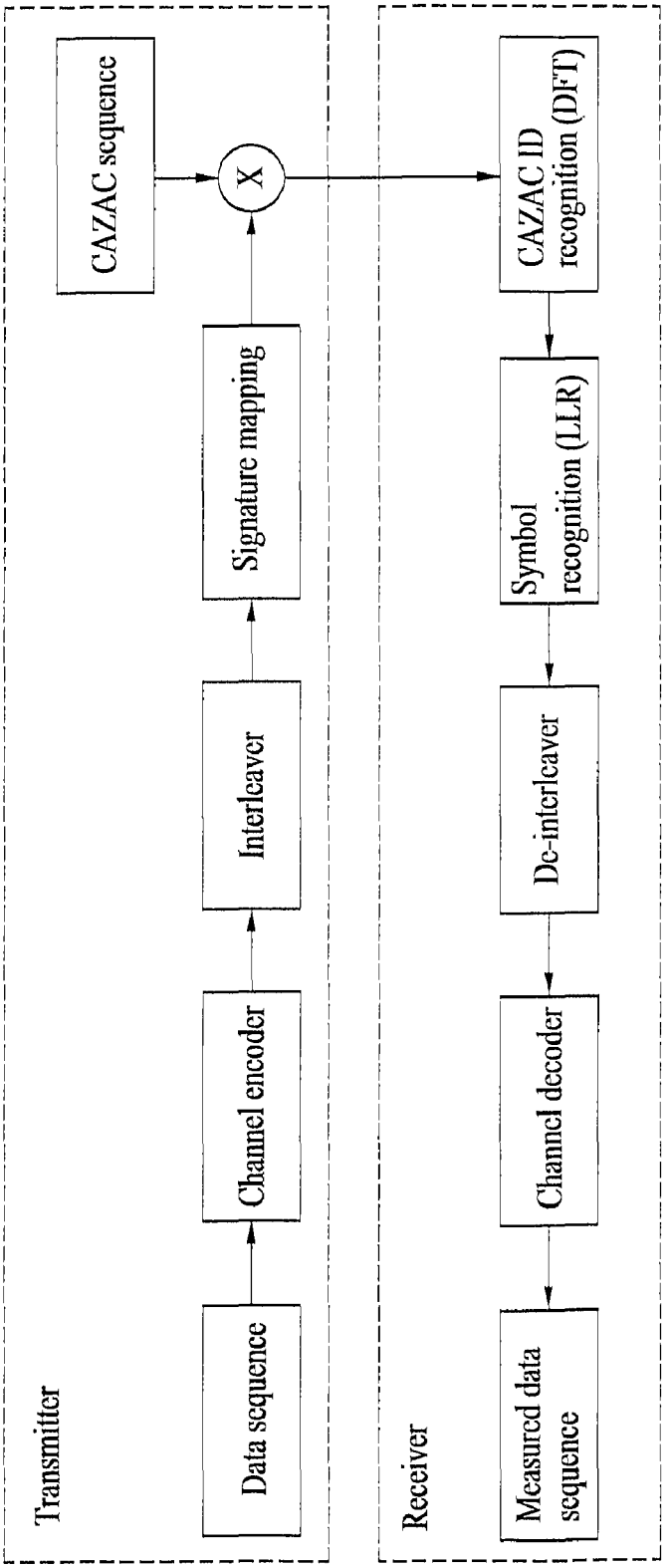
Transmitter
Data sequence
Channel encoder
Interleaver
Signature mapping
CAZAC sequence
X
Receiver
Measured data sequence
Channel decoder
De-interleaver
Symbol recognition (LLR)
CAZAC ID recognition (DFT)

METHOD OF TRANSMITTING DATA IN A MOBILE COMMUNICATION SYSTEM

CROSS-REFERENCE TO RELATED APPLICATIONS

This application is the National Stage filing under 35 U.S.C. §371 of International Application No. PCT/KR07/02784, filed on Jun. 8, 2007, which claims the benefit of earlier filing date and right of priority to Korean Application Nos. 10-2006-0052167, filed on Jun. 9, 2006, and 10-2006-0057488, filed on Jun. 26, 2006.

TECHNICAL FIELD

The present invention relates to a mobile communication system, and more particularly, to a method of expanding a code sequence, a structure of a random access channel and a method of transmitting data in a mobile communication system.

BACKGROUND ART

A user equipment uses a random access channel (RACH) to access a network in a state that the user equipment is not uplink synchronized with a base station. A signal having repetitive characteristic in a time domain is used in the random access channel, so that a receiver easily searches a start position of a transmission signal. In general, the repetitive characteristic is realized by repetitive transmission of a preamble.

A representative example of a sequence for realizing the preamble includes a CAZAC (Constant Amplitude Zero Auto Correlation) sequence. The CAZAC sequence is expressed by a Dirac-Delta function in case of auto-correlation and has a constant value in case of cross-correlation. In this respect, it has been estimated that the CAZAC sequence has excellent transmission characteristics. However, the CAZAC sequence has limitation in that maximum N−1 number of sequences can be used for a sequence having a length of N. For this reason, a method for increasing available bits of the sequence while maintaining the excellent transmission characteristics is required.

Meanwhile, there are provided various methods for transmitting data from a random access channel by using the CAZAC sequence. Of them, the first method is to directly interpret CAZAC sequence ID to message information. Assuming that data to be transmitted is a preamble, if a sufficient number of sequences that can be used as the preamble are provided, message passing can be performed with only CAZAC sequence ID without additional manipulation. However, since a method of transmitting additional information should be considered in an actual synchronized RACH, problems occur in that there is difficulty in realizing a sufficient number of CAZAC sequence sets, and the cost required for search of a receiver increases.

The second method is to simultaneously transmit CAZAC sequence and Walsh sequence by using a code division multiplexing (CDM) mode. In this case, CAZAC sequence ID is used as user equipment identification information, and the Walsh sequence transmitted in the CDM mode is interpreted as message information. FIG. **1** is a block schematic view illustrating a transmitter for realizing the second method. However, the second method has limitation in that even though the Walsh sequence is added to the CAZAC sequence, bits of message that can additionally be obtained are only $\log_2 N$ bits when the Walsh sequence has a length of N.

The third method is to transmit CAZAC sequence and Walsh sequence in such a way to mix the Walsh sequence with the CAZAC sequence. In this case, CAZAC sequence ID is used as user equipment identification information, and the Walsh sequence is interpreted as message information. FIG. **2** is a block diagram illustrating a data processing procedure at a transmitter for realizing the third method. However, according to the third method, since the Walsh sequence acts as noise in detection of the CAZAC sequence to cause difficulty in detecting sequence ID, there is limitation in that repetitive sequences should be transmitted to prevent the Walsh sequence from acting as noise in detection of the CAZAC sequence.

The fourth method is to either give orthogonality between blocks constituting a corresponding sequence by multiplying an exponential term by a CAZAC sequence or directly apply data modulation such as DPSK, DQPSK, D8PSK, etc. In this case, CAZAC sequence ID is used as user equipment identification information, and the modulated sequence is demodulated and then used as message information. FIG. **3**A illustrates data modulation according to the former method of the fourth method, and FIG. **3**B illustrates data modulation according to the latter method of the fourth.

Furthermore, the fifth method is to transmit CAZAC sequence by attaching a message part to the CAZAC sequence. FIG. **4**A illustrates the case where a message (coded bit) is attached to the CAZAC sequence used as a preamble, and FIG. **4**B illustrates the case where a message (coded bit) is attached to a sequence consisting of a predetermined number of blocks to which orthogonality is given.

However, the fourth method and the fifth method have a problem in that they are susceptible to change of channel condition.

DISCLOSURE OF THE INVENTION

Accordingly, the present invention has been suggested to substantially obviate one or more problems due to limitations and disadvantages of the related art, and an object of the present invention is to provide a method of transmitting and receiving message between a user equipment and a base station by using a long sequence to maximize time/frequency diversity and alleviating performance attenuation due to channel.

Another object of the present invention is to provide a method of transmitting data through a code sequence in a mobile communication system, in which the quantity of data can be increased and the transmitted data becomes robust to noise or channel change.

Still another object of the present invention is to provide a method of suggesting a structure of an efficient random access channel in a multi-carrier system.

Further still another object of the present invention is to provide a method of minimizing access time of a user equipment to a random access channel in a mobile communication system.

To achieve these objects and other advantages and in accordance with the purpose of the invention, as embodied and broadly described herein, a data transmission method through a random access channel in a mobile communication system comprises generating a new code by multiplying a code sequence by an exponential sequence, and transmitting the new code sequence to a receiving side.

In another aspect of the present invention, a data transmission method by using a code sequence in a mobile communication system comprises conjugating at least one element included in at least one block of a code sequence divided by at

least two blocks to indicate predetermined information, and transmitting the code sequence, in which the at least one block is conjugated, to a receiving side.

In still another aspect of the present invention, a data transmission method by using a code sequence in a mobile communication system generating a second code sequence indicating predetermined information by combining at least two first code sequences mapped with at least one information bit, respectively, and transmitting the second code sequence to a receiving side.

In further still another aspect of the present invention, a code sequence transmission method in a mobile communication system comprises generating a combination code sequence by combining a base code sequence to at least one code sequence obtained by circular shift of the base code sequence, and transmitting the combination code sequence to a receiving side.

In further still another aspect of the present invention, a code sequence transmission method in a mobile communication system generating a repetitive code sequence by repeatedly concatenating a first code sequence at least one or more times, generating a cyclic prefix (CP) by copying a certain part of a rear end of the repetitive code sequence and concatenating the copied part to a front end of the repetitive code sequence, and transmitting the repetitive code sequence, in which the CP is generated, to a receiving side.

In further still another aspect of the present invention, a method of allocating a random access channel (RACH) in a multi-carrier system comprises allocating a random access channel to each of at least two consecutive frames in a way that frequency bands of the random access channels allocated to the at least two consecutive frames are not overlapped with each other, and transmitting allocation information of the random access channels allocated to the at least two consecutive frames to at least one user equipment.

In further still another aspect of the present invention, a data transmission method through a code sequence in a mobile communication system mapping each of a plurality of blocks having at least one bit of a input data stream, respectively to a corresponding signature sequence, multiplying a signature sequence stream, to which the plurality of blocks are mapped, by a specific code sequence, and transmitting the signature sequence stream multiplied by the specific code sequence to a receiving side.

BRIEF DESCRIPTION OF THE DRAWINGS

FIG. **1** illustrates an example of a data transmission method through a random access channel in an OFDMA system according to the related art;

FIG. **2** illustrates another example of a data transmission method through a random access channel in an OFDMA system according to the related art;

FIG. **3**A and FIG. **3**B illustrate still another example of a data transmission method through a random access channel in an OFDMA system according to the related art;

FIG. **4**A and FIG. **4**B illustrate further still another example of a data transmission method through a random access channel in an OFDMA system according to the related art;

FIG. **5** illustrates an example of a structure of a random access channel used in an OFDMA system;

FIG. **6**A and FIG. **6**B illustrate examples of sending an RACH signal in a time domain or a frequency domain based on a structure of a random access channel of FIG. **5**;

FIG. **7** illustrates another example of a structure of a random access channel used in an OFDMA system;

FIG. **8**A and FIG. **8**B illustrate still another example of a structure of a random access channel used in an OFDMA system;

FIG. **9** illustrates a structure of a random access channel according to one embodiment of the present invention;

FIG. **10** illustrates a structure of a random access channel of a sub-frame to which RACH pilot is allocated;

FIG. **11** illustrates a repetitive structure of a preamble according to one embodiment of the present invention;

FIG. **12** is a structural view of unit data to illustrate one embodiment of the present invention, which transmits data by using a code sequence expanded through conjugation;

FIG. **13** is a flow chart illustrating a procedure of receiving and decoding data transmitted in a code sequence expanded through conjugation in accordance with one embodiment of the present invention;

FIG. **14** is a structural view of unit data to illustrate one embodiment of the present invention, which transmits data by using a code sequence expanded through grouping;

FIG. **15** is a flow chart illustrating a procedure of receiving and decoding data transmitted in a code sequence expanded through grouping;

FIG. **16** is a structural view of unit data to illustrate one embodiment of the present invention, which transmits data by using a code sequence expanded through grouping and delay processing;

FIG. **17** is a flow chart illustrating a procedure of receiving and decoding data transmitted in a code sequence expanded through grouping and delay processing;

FIG. **18** is a structural view of unit data to illustrate one embodiment of the present invention, which transmits data by using a code sequence expanded through PPM modulation;

FIG. **19** is a flow chart illustrating a procedure of receiving and decoding data transmitted in a code sequence expanded through PPM modulation;

FIG. **20**A and FIG. **20**B are flow charts illustrating a procedure of performing synchronization in a random access channel in accordance with a data transmission method of the present invention;

FIG. **21** illustrates a method of transmitting data to a receiver through a signaling channel in accordance with one embodiment of the present invention; and

FIG. **22** illustrates an example of a receiver and a transmitter for transmitting a preamble and data through RACH, SCH or other channel in accordance with one embodiment of the present invention.

BEST MODE FOR CARRYING OUT THE INVENTION

Hereinafter, structures, operations, and other features of the present invention will be understood readily by the preferred embodiments of the present invention, examples of which are illustrated in the accompanying drawings.

A random access channel (RACH) is used to allow a user equipment to access a network in a state that the user equipment is not uplink synchronized with a base station. A random access mode can be classified into an initial ranging access mode and a periodic ranging access mode depending on an access mode to network. According to the initial ranging access mode, the user equipment acquires downlink synchronization and first accesses a base station. According to the periodic ranging access mode, the user equipment connected with a network accesses the network if necessary. The initial ranging access mode is used to allow the user equipment to synchronize with the network while accessing the network and receive its required ID from the network. The periodic

ranging access mode is used to initiate a protocol to receive data from the base station or when a packet to be transmitted exists.

In particular, the periodic ranging access mode can be classified into two types in the 3GPP LTE (long term evolution) system, i.e., a synchronized access mode and a non-synchronized access mode. The synchronized access mode is used if an uplink signal is within a synchronization limit when the user equipment accesses the RACH. The non-synchronized access mode is used if the uplink signal is beyond the synchronization limit. The non-synchronized access mode is used when the user first accesses the base station or synchronization update is not performed after synchronization is performed. At this time, the synchronized access mode is the same as the periodic ranging access mode, and is used when the user equipment accesses the RACH for the purpose of notifying the base station of the change status of the user equipment and requesting resource allocation.

On the other hand, the synchronized access mode alleviates limitation of a guard time in the RACH by assuming that the user equipment does not depart from uplink synchronization with the base station. For this reason, much more time-frequency resources can be used. For example, a considerable amount of messages (more than 24 bits) may be added to a preamble sequence for random access in the synchronized access mode so that both the preamble sequence and the messages may be transmitted together.

A structure of the RACH, which performs a unique function of the RACH while satisfying the aforementioned synchronized and non-synchronized access modes will now be described.

FIG. **5** is a diagram illustrating an example of a structure of a random access channel (RACH) used in an OFDMA system. As shown in FIG. **5**, it is noted that the RACH is divided into N number of sub-frames on a time axis and M number of frequency bands on a frequency axis depending on a radius of a cell. Frequency in generation of the RACH is determined depending on QoS (Quality of Service) requirements in a medium access control (MAC) layer. In general, the RACH is generated per certain period (several tens of milliseconds (ms) to several hundreds of ms). In this case, frequency diversity effect and time diversity effect are provided in generating several RACHs and at the same time collision between user equipments which access through the RACH is reduced. The length of the sub-frame can be 0.5 ms, 1 ms, etc.

In the RACH structure as shown in FIG. **5**, a random sub-frame will be referred to as a time-frequency resource (TFR) which is a basic unit of data transmission. FIG. **6**A is a diagram illustrating a type of sending a random access signal to the TFR in a time domain, and FIG. **6**B illustrates a type of sending a RACH signal in a frequency domain.

As shown in FIG. **6**A, if a random access signal is generated in a time domain, the original sub-frame structure is disregarded and the signal is aligned through only the TFR. By contrast, as shown in FIG. **6**B, in case of the synchronized random access mode, the sub-frame structure is maintained in the frequency domain and at the same time a random access signal to be transmitted to sub-carriers of each OFDM symbol is generated. Accordingly, orthogonality can be maintained between respective blocks constituting TFR, and channel estimation can easily be performed.

FIG. **7** is a diagram illustrating another example of a structure of RACH used in an OFDMA system. As shown in FIG. **7**, it is noted that a preamble 'b' and a pilot 'a' are partially overlapped in a TDM/FDM mode and a TDM mode of RACH burst duration of an attached wideband pilot. It is also noted that a pilot 'a' and a pilot 'b' are simultaneously overlapped with a preamble 'a' and the preamble 'b' in the TDM/FDM mode and the TDM mode of an embedded wideband pilot. In other words, it is designed that a preamble and a pilot are together transmitted through the RACH, so that message decoding is easily performed through channel estimation if message is added to the RACH. Alternatively, a wideband pilot is used so that channel quality information (CQI) of a total of RACH bands can be acquired in addition to a preamble band of the RACH.

FIG. **8**A and FIG. **8**B are diagrams illustrating another examples of a structure of the RACH used in the OFDMA system,

As shown in FIG. **8**A, a preamble is transmitted for a predetermined time period through a frequency band, and a short block duration is provided at a certain period so that a pilot for decoding a preamble is transmitted to a corresponding short block. At this time, the pilot transmission is performed through a part of a total of frequency bands (transmission through **25** sub-carriers corresponding to a middle band of a total of 75 sub-carriers), so that the pilot can be transmitted to a specific user equipment under a multi-access environment.

Furthermore, as shown in FIG. **8**B, a message to be transmitted and a pilot for decoding the message are multiplexed and continue to be transmitted through some frequency bands (for example, 25 middle sub-carrier bands of a total of 75 sub-carrier bands) selected from a total of frequency bands. Accordingly, respective user equipments which perform multi-access can be identified by allocating some frequency bands at different frequencies.

FIG. **9** is a diagram illustrating a structure of RACH according to one embodiment of the present invention.

Generally, frequency in generation of the RACH is determined depending on QoS requirements in a MAC layer. The RACH is generated at a variable period (several ms to several hundreds of ms) depending on requirements of a cell. The RACH can be generated in a time domain or a frequency domain as described above with reference to FIG. **6**A and FIG. **6**B. In the embodiment of FIG. **9**, the structure of the RACH corresponds to the case where a random access signal is generated in the frequency domain.

Referring to FIG. **9**, in this embodiment, to overcome a drawback of a long interval required for retry when the user equipment fails to access the RACH, a corresponding RACH resource is dispersed in each frame within one period if frequency in generation of the RACH and the quantity of overhead are determined. The number of frames included in one period can freely be determined as occasion demands. At this time, it is preferable that the RACH is divisionally arranged so as to be uniformly distributed for each frequency band with respect to a plurality of frames constituting one period. However, position on the time axis may be changed without change of position on the frequency axis and vice versa depending on specific requirements (synchronized action or decrease of inter-cell interference) of a cell or if a system band is small. Also, arrangement of any one of frequency and time may be changed to obtain the minimum interval between the RACHs arranged in each frame.

In the embodiment of FIG. **9**, the network should notify the user equipment of position information of the allocated RACH resource. In other words, the network can notify each user equipment of frequency and time information occupied by the RACH resource allocated for each frame included in one period, and each user equipment can try random access through the allocated RACH resource by using the position information from the network. The position information of the RACH resource of each frame can be expressed by sub-

carrier offset, the number of sub-carriers, timing offset, and the number of symbols. However, if the RACH information on each frame is expressed by the above four parameters, it may be undesirable in that the quantity of the information can be increased. Accordingly, a method of decreasing the quantity of the information for expressing the position information of the RACH allocated on each frame is required. The position information of the RACH can be transmitted through a broadcast channel (BCH) or other downlink control channel.

As one method, a method using a hopping pattern may be considered. The hopping pattern means a pattern consisting of information indicating frequency domains of the RACH resource allocated to each frame within one period. In other words, in the embodiment of FIG. **9**, since the RACH resource is divisionally arranged so as to be uniformly distributed for each frequency band with respect to a plurality of frames constituting one period, an indicator which indicates a frequency band that can be allocated to each frame as the RACH resource is previously determined, and the frequency band of the RACH resource allocated to each frame within one period can be notified through a pattern of the indicator which indicates a corresponding frequency band.

For example, if four frames are used as one period in a system which uses a total of bands of 10 MHz, the position of the RACH includes sub-bands having an interval of 2.5 MHz as one RACH frequency band (band smaller than 1.25 MHz or 2.5 MHz). At this time, a total of bands consist of four sub-bands, wherein the respective sub-bands are designated by indicators, which indicate each sub-band, as 1, 2, 3 and 4 in due order from a high frequency band to a low frequency band. In this way, the frequency band position information of the RACH resource allocated to all frames within one period can be expressed by patterns configured by the above indicators, for example 2, 3, 1, 4. The hopping pattern may be configured differently or equally depending on each frame. Time information of the RACH resource allocated to each frame within one period can generally be expressed by timing offset and the number of symbols. At this time, at least any one of the timing offset and the number of symbols may be fixed to decrease the quantity of the information. For example, if it is previously scheduled that the timing offset and the number of symbols for the RACH resource of each frame are fixed, the network only needs to transmit the hopping pattern to notify the user equipment of the position information of the RACH resource of all frames within one period.

If each sub-band is narrow or considering influence of interference between user equipments, hopping patterns for all frames may be set equally. In this case, the network only needs to notify the user equipment of a frame period.

Hereinafter, the procedure of transmitting uplink data from the user equipment to the base station by using the structure of the RACH as shown in the embodiment of FIG. **9** will be described. In this case, data transmission is performed through the RACH among reverse common channels consisting of a plurality of frames.

First of all, the user equipment tries to access the dispersed RACH included in the current frame to transfer its information to the base station. If the user equipment successfully accesses the RACH, the user equipment transmits preamble data through the corresponding RACH. However, if the user equipment fails to access the RACH, the user equipment tries to access the RACH divisionally arranged in the frame of the next order. At this time, the RACH included in the frame of the next order is preferably arranged in a frequency band different from that of the RACH of the previous frame if the frequency band is not sufficiently wide or there are no specific requirements (inter-cell interference or limitation in action range of user equipment). Also, the above access procedure continues to be performed in the frame of the next order until the user equipment successfully accesses the RACH.

Meanwhile, in case of the synchronized RACH, the sub-frame of each frame preferably includes a short block to which a pilot for the user equipment which has accessed the corresponding RACH is allocated. At least one RACH pilot and access pilot may be allocated to the short block at a predetermined pattern. In other words, the user equipment which has accessed the RACH should know channel information to receive a channel from the base station. The channel information may be set in RACH pilot within an uplink short block. The base station allocates a proper channel to the user equipment through the corresponding RACH pilot. Meanwhile, if the user equipment which accesses the RACH notifies the base station of information of channel quality as to whether the user equipment is preferably allocated with which channel through the RACH pilot, a favorable channel can be allocated to the user equipment during scheduling, whereby communication of good quality can be maintained.

Accordingly, the RACH pilot that can be used for the user equipment which accesses the RACH is separately allocated to the sub-frame which includes RACH. Thus, the user equipment which accesses the RACH sends a preamble to the base station through the corresponding RACH and also sends a pilot for transmission of channel quality information to the designated RACH pilot. The RACH pilot is a sequence designated depending on a preamble, and it is preferable that the user equipments, which use different preamble sequences, use different RACH pilot sequences if possible or select RACH pilot of different sub-carriers or partially overlapped sub-carriers.

FIG. **10** is a diagram illustrating a structure of a random access channel of a sub-frame to which the RACH pilot is allocated. It is noted that each sub-frame includes at least one short block to which at least one RACH pilot and access pilot are allocated at a predetermined pattern. In this case, the RACH pilot exists in the frequency band of the allocated RACH and other system bands. In this embodiment, it has been described that two short blocks exist per one frame and the RACH pilot is transmitted to the short blocks. However, the present invention is not limited to such embodiment, and various modifications can be made within the apparent range by those skilled in the art.

As described above, it has been described that preamble, synchronization timing information including pilot information, uplink resource allocation information and message such as uplink data can be transmitted through the RACH of various structures. It will be apparent that the data transmission method according to the embodiments of the present invention can be used in the RACH and other channels.

Meanwhile, the preamble and the message may separately be transmitted through the RACH. Alternatively, the message may be transmitted by being implicitly included in the preamble. One embodiment of the present invention relates to a method of transmitting a preamble through the latter transmission manner. In one embodiment of the present invention, a code sequence more expanded than that of the related art can be used for effective transmission of the preamble. Hereinafter, a method of improving CAZAC sequence according to one embodiment of the present invention for effective transmission of the preamble will be described.

Since the receiver should search a start position of a transmission signal in the random access channel, it is generally designed that a transmission signal has a specific pattern in a time domain. To this end, the preamble is transmitted repeat-

edly or a certain interval is maintained between sub-carriers in a frequency domain to obtain repetitive characteristics in the time domain, thereby identifying time synchronization.

In the former case, the preamble represents a reference signal used for the purpose of initial synchronization setting, cell detection, frequency offset, and channel estimation. In a cellular mobile communication system, a sequence having good cross-correlation characteristic is preferably used for repetitive transmission of the preamble. To this end, binary hardamard code or poly-phase CAZAC sequence may be used. Particularly, the CAZAC sequence has been estimated that it has excellent transmission characteristics as it is expressed by a Dirac-Delta function in case of auto-correlation and has a constant value in case of cross-correlation.

The CAZAC sequence can be classified into GCL sequence (Equation 1) and Zadoff-Chu sequence (Equation 2) as follows.

$$c(k;N,M)=\exp\left(-\frac{j\pi Mk(k+1)}{N}\right)\text{ for odd }N \qquad \text{[Equation 1]}$$

$$c(k;N,M)=\exp\left(-\frac{j\pi Mk^2}{N}\right)\text{ for even }N$$

$$c(k;N,M)=\exp\left(\frac{j\pi Mk(k+1)}{N}\right)\text{ for odd }N \qquad \text{[Equation 2]}$$

$$c(k;N,M)=\exp\left(\frac{j\pi Mk^2}{N}\right)\text{ for even }N$$

In the above Equations, it is noted that if the CAZAC sequence has a length of N, actually available sequences are limited to N−1 number of sequences. Accordingly, it is necessary to increase the number of CAZAC sequences to efficiently use them in an actual system.

For example, a method of expanding the number of available sequences by 1 is suggested by providing an improved CAZAC sequence p(k) in such a way to multiply a CAZAC sequence c(k) by a predetermined modulation sequence m(k). In other words, assuming that Zadoff-Chu sequence is used as the CAZAC sequence, the CAZAC sequence c(k), the modulation sequence m(k) and the improved CAZAC sequence p(k) can be defined by the following Equations 3, 4, and 5, respectively.

$$\textit{CAZAC}\text{ sequence: }c(k;N,M)=\exp\left(\frac{j\pi Mk(k+1)}{N}\right) \qquad \text{[Equation 3]}$$

$$\text{Modulation sequence: }m(k)=\exp\left(\frac{j2\pi\delta}{N}k\right) \qquad \text{[Equation 4]}$$

Improved *CAZAC* sequence (or improved preamble): [Equation 5]

$$p(k)=c(k)*m(k)=\exp\left(\frac{j\pi M}{N}k(k+1)+\frac{j2\pi\delta}{N}k\right)$$

The improved CAZAC sequence p(k) maintains auto-correlation and cross-correlation characteristics of the CAZAC sequence. The following Equation 6 illustrates auto-correlation characteristic of p(k), and it is noted from the Equation 6 that the final result is a Dirac-delta function. In particular, if the modulation sequence m(k) is a sequence having a certain phase, it is characterized in that the modulation sequence m(k) always maintains the auto-correlation characteristic.

$$\begin{aligned}ad(d)&=\sum_k\exp\left(\frac{j\pi M}{N}(k+d)(k+d+1)+\frac{j2\pi\delta}{N}(k+d)\right)\\&\quad\exp\left(-\frac{j\pi M}{N}k(k+1)-\frac{j2\pi\delta}{N}k\right)\\&=\sum_k\exp\left(\frac{j2\pi M}{N}(2dk+d(d+1))+\frac{j2\pi\delta}{N}d\right)\\&=\exp\left(\frac{j2\pi\delta}{N}d\right)\sum_k\exp\left(\frac{j\pi M}{N}(2dk+d(d+1))\right)\\&=\begin{cases}1 & d=0\\0 & d\neq 0\end{cases}\end{aligned} \qquad \text{[Equation 6]}$$

Furthermore, the following Equation 7 illustrates cross-correlation characteristic of p(k).

$$\begin{aligned}cc(d)&=\sum_k\exp\left(\frac{j\pi(M+x)}{N}(k+d)(k+d+1)+\frac{j2\pi\delta}{N}(k+d)\right)\\&\quad\exp\left(-\frac{j\pi M}{N}k(k+1)-\frac{j2\pi\delta}{N}k\right)\\&=\sum_k\exp\left(\frac{j\pi x}{N}(k+d)(k+d+1)\right)\\&\quad\exp\left(\frac{j\pi M}{N}(k+d)(k+d+1)+\frac{j2\pi\delta}{N}(k+d)\right)\\&\quad\exp\left(-\frac{j\pi M}{N}k(k+1)-\frac{j2\pi\delta}{N}k\right)\\&=\sum_k\exp\left(\frac{j\pi x}{N}(k+d)(k+d+1)\right)\\&\quad\exp\left(\frac{j\pi M}{N}(2dk+d(d+1))+\frac{j2\pi\delta}{N}d\right)\\&=\exp\left(\frac{j\pi M}{N}d(d+1)\right)\sum_k\exp\left(\frac{j\pi x}{N}(k+d)(k+d+1)\right)\\&\quad\exp\left(\frac{j2\pi dM}{N}k\right)\end{aligned} \qquad \text{[Equation 7]}$$

In this case, although Equation 7 seems to be similar to Equation 6, it is noted that in view of summation term, auto-correlation is expressed by sum of exponential but cross-correlation is expressed by the product of two sequences. The first term is another CAZAC sequence of which seed value is x, and the second term is a simple exponential function. The sum of the product of two sequences is equal to obtaining a coefficient of the exponential function, and its value is equal to a value obtained by converting the CAZAC sequence of which seed value is x into a frequency domain and extracting a value from the frequency position of exponential.

Since the CAZAC sequence has auto-correlation of Dirac-delta characteristic, if it undergoes Fourier transform, it maintains auto-correlation characteristic of Dirac-delta of a constant amplitude even in the transformed area. For this reason, if values of specific positions are extracted from the frequency domain, their sizes are 1 and equal to each other but their phases are different from each other. Accordingly, if this result is added to the Equation 7 to obtain cross-correlation, the obtained cross-correlation can briefly be expressed by the following Equation 8.

$$cc(d)=\exp\left(\frac{j\pi M}{N}d(d+1)+\frac{j2\pi\delta}{N}d\right) \qquad \text{[Equation 8]}$$

-continued

$$\sum_k \exp\left(\frac{j\pi x}{N}(k+d)(k+d+1)\right)$$

$$\exp\left(\frac{j2\pi dM}{N}k\right)$$

$$= \exp\left(\frac{j\pi M}{N}d(d+1) + \frac{j2\pi\delta}{N}d\right)C(dM/N;x)$$

It is noted from the Equation 8 that since C(dM/N;x) always has a size of 1 and an exponential term also has a size of 1, the cross-correlation is always fixed at 1.

After all, characteristics of the related art CAZAC sequence can be maintained by the Equation 5 and at the same time the number of codes can be increased. This means that the result in the area where the exponential terms are multiplied is equal to applying circular shift to the Fourier transformed area, and multiplying exponential sequences in the time domain is equal to performing circular shift in the frequency domain.

In other words, it is noted that if correlation between two sequences p(k;M,N,d**1**) and p(k;M,N,d**2**) of which seed values are equal to each other is obtained, impulse occurs in a point where a delay value d in cross-correlation reaches d**1**-d**2**. Although design of the improved sequence as above has the same result as that of circular shift of the CAZAC sequence, this embodiment of the present invention is advantageous in that the result can be obtained by a simple procedure such as multiplying two exponential sequences without Fourier inverse transform after Fourier transform and circular shift.

Hereinafter, a method of improving data transmission reliability of a preamble by performing predetermined data processing for the related art code sequence and a method of expanding a length of a code sequence when data are simultaneously transmitted will be described. If the CAZAC sequence is used as the code sequence, the CAZAC sequence expanded by the above method is preferably used. However, the CAZAC sequence is not necessarily limited to the CAZAC sequence expanded by the above method, and the related art CAZAC sequence may be used.

First of all, a structure of transmission data, i.e., preamble, which is commonly applied to the embodiments of the present invention, will be described.

In a 3GPP LTE (Long Term Evolution) system, a transmitter can repeatedly transmit the same sequence two times or more so as to allow a receiver to easily detect transmission data or improve additional detection performance (i.e., increase of spreading gain). Accordingly, since the receiver only needs to detect repetitive patterns regardless of the type of the received sequence, it can simply identify time position of a user equipment which accesses the RACH and improve detection performance.

FIG. **11** is a diagram illustrating a structure of a preamble according to one embodiment of the present invention. In an orthogonal frequency divisional transmission system, a cyclic prefix (CP) is used, in which the last part of OFDM symbol is copied and then prefixed to the OFDM symbol to compensate a multi-path loss in signal transmission. Accordingly, if the OFDM symbol consists of two repetitive preambles, a part of the preamble of the later order is copied in the first part by CP to enable compensation of the multi-path loss for the corresponding preamble. Also, the CP is advantageous in that it is easy to identify user equipments which access different RACHs in case of CAZAC having good periodic correlation.

Since inter-symbol interference does not occur even though a single sequence is transmitted by prefixing CP thereto instead of repetitive transmission of sequence, a predetermined receiving algorithm can be realized in the frequency domain without any problem. However, if the receiver realizes a receiving algorithm in the time domain with neither repetitive transmission nor CP, the receiver should detect all kinds of code sequences to identify user equipments which access the RACH. In this respect, the preamble is preferably realized by a structure of a repetitive pattern. At this time, whether to realize a repetition pattern can be determined depending on a data rate supported by the system or the number of repetitive times can be determined if a repetitive pattern is realized. For example, to support a minimum data rate supported by the system, RACH preamble can repeatedly be transmitted one or more times depending on the length of the sequence.

First to fourth embodiments which will be described later relate to a data processing method of a sequence constituting the structure of the preamble. In these embodiments, data transmitted to the receiver could be the structure of the preamble of FIG. **11** or a partially omitted structure (having neither repetitive transmission nor CP). Although it is assumed that the CAZAC sequence is used as the code sequence for data transmission, the code sequence is not necessarily limited to the CAZAC sequence. Every sequence having excellent transmission characteristic, such as Hadarmad code and gold code, can be used as the code sequence.

<First Embodiment>

To transmit data, a landmark that can be identified is generally required for a transmission signal constituting data. In this embodiment, conjugation is used as the landmark. Since a phase variation width between a conjugated transmission signal and other transmission signal is very great, interference between transmission signals decreases, whereby reliability of data transmission can be improved in spite of influence of channel.

FIG. **12** illustrates a method of transmitting data through conjugation according to one embodiment of the present invention. In the embodiment of FIG. **12**, one CAZAC sequence is divided into four blocks, and '0 ' or '1 ' indicates whether to perform conjugate for each block. For example, it may be promised that a block which is not conjugated is expressed by '0 ', and a block which is conjugated is expressed by '1.' In this way, one CAZAC sequence can express information of 4 bits. In other words, if one CAZAC sequence is divided into N number of blocks, information of N bits can be expressed.

At this time, in a single CAZAC sequence of a long length corresponding to a length of transmission data, a part of the single CAZAC sequence, which corresponds to a specific block having a value of 1, may be conjugated. Also, in a plurality of CAZAC sequences of a short length corresponding to each block length of transmission data, a CAZAC sequence corresponding to a specific block having a value of 1 may be conjugated.

FIG. **13** is a diagram illustrating an example of a method of receiving and decoding the sequence transmitted through conjugation from the transmitter in accordance with one embodiment of the present invention.

It is preferable that the transmitter always allocates a value of 0 to the first block of the transmission data so that the first block is used as a reference later. Accordingly, the receiver identifies sequence ID for the received first block (S**1101**), and then measures a peak by using only the corresponding block (S**1102**). Next, the receiver identifies sequence IDs for the first and second blocks (S**1103**), and then measures a peak

by using the first and second blocks together. At this time, since it is unclear whether the sequence of the second block is in the conjugated status, the receiver respectively measures a peak corresponding to the case where the corresponding block is conjugated (S**1104**) and a peak corresponding to the case where the corresponding block is not conjugated (S**1105**), and then selects greater one of the two peaks (S**1106**). Subsequently, the receiver identifies sequence IDs for the first to third blocks (S**1107**), and then measures a peak by using the first to third blocks together. In this case, since it is unclear whether the sequence of the third block is in the conjugated status, the receiver respectively measures a peak corresponding to the case where the corresponding block is conjugated (S**1108**) and a peak corresponding to the case where the corresponding block is not conjugated (S**1109**), and then selects greater one of the two peaks (S**1110**). In this way, decoding is performed for the first block to the last block so that the original data is finally decoded.

<Second Embodiment>

FIG. **14** is a diagram illustrating a method of transmitting data using a sequence according to another preferred embodiment of the present invention. Although data transmission is performed by change of the sequence in the first embodiment, in this embodiment, a type of a sequence for expressing one block is divided into a sequence (first sequence) for a block value of '0 ' and a sequence (second sequence) for a block value of '1,' and the first and second sequence are grouped. In this case, since the receiver detects only sequence ID (ID of the first sequence or ID of the second sequence) for each block, the receiver is less affected by noise or channel.

All sequences are expressed by one group "$\{c_0(k;M_i), c_1(k;M_j)\}$" by grouping two sub-sequences (first sequence and second sequence) (i and j are integers different from each other). In this case, $c_0(k;M_i)$ is the first sequence for the block value of 0 (or bit value), and $c_1(k;M_j)$ is the second sequence for the block value of 1. At this time, a CAZAC sequence of a long length corresponding to a length of transmission data may be used as each sub-sequence constituting each group. Alternatively, a CAZAC sequence of a short length corresponding to each block length of transmission data may be used as each sub-sequence constituting each group.

Meanwhile, the receiver identifies sequence ID of each block, and identifies a type of the sequence (first sequence or second sequence) for each block from a sequence ID set consisting of the identified sequence IDs. At this time, the type of the sequence for each block can be expressed by group ID. In other words, in this embodiment, since it is assumed that code values of each block can be expressed by 0 and 1, two types of the sequence for each block or two types of group ID are obtained. The code values of each block can be restored through group ID. This decoding procedure will be described in detail with reference to FIG. **15**.

The receiver identifies sequence ID of each block constituting a corresponding sequence if the sequence is received (S**1501**), and measures a peak for a sequence ID set consisting of the identified sequence IDs (S**1502**). In this case, two peaks having high frequency in generation are selected (S**1503**) so that sequences which generate the corresponding peaks are identified as the first sequence and the second sequence constituting the group. At this time, if the first sequence and the second sequence are expressed by predetermined group IDs, respectively, first group ID indicating a code value of 0 and second group ID indicating a code value of 1 can be identified. After all, group ID of each block can be identified through the step S**1503** (S**1504**), and thus the code value of each block can be identified (S**1508**).

If sequence IDs that can not identify group ID exist due to error occurring during the decoding procedure, peaks are searched for a set of corresponding sequence IDs (S**1505**), and among the peaks, two powerful peaks are detected (S**1506**) so that group IDs are again identified from the detected powerful peaks (S**1507**). Subsequently, code values of the corresponding blocks can be identified from the identified group IDs (S**1508**).

<Third Embodiment>

FIG. **16** is a diagram illustrating a method of transmitting data using a sequence according to another preferred embodiment of the present invention.

If the second embodiment is more expanded, a total number of data bits that can be transmitted through one group can be increased. For example, if two sequences are defined as one group like the second embodiment, data of 1 bit per block can be transmitted. If four sequences are defined as one group, data of 2 bits per block can be transmitted. If eight sequences are defined as one group, data of 3 bits per block can be transmitted. However, since a plurality of sequences are grouped and defined as one set, a problem occurs in that if the length of each sequence is short, the number of groups that can be selected is decreased in proportion to the short length of each sequence.

Accordingly, it is necessary to expand the length of the sequence to increase the number of groups that can be selected. To this end, in this embodiment, the length of the sequence for each block is expanded while respective sequences are multi-overlapped as shown in FIG. **16**B and independence is maintained owing to transmission delay between the overlapped sequences.

Referring to FIG. **16**(*a*), a data value of 2 bits is given to each block. Accordingly, a sequence group for each block consists of four different CAZAC sequences. Since each CAZAC sequence constituting the sequence group should identify four values, a group size should be increased correspondingly. However, in this case, a problem occurs in that the number of groups that can be used by each base station is decreased. Accordingly, as shown in FIG. **16**, the length of each CAZAC sequence is expanded as much as need be while a predetermined delay is given to each CAZAC sequence during data transmission, whereby independence is maintained between the respective CAZAC sequences.

Meanwhile, the receiver identifies ID of a corresponding block based on the order of each CAZAC sequence represented in the time/frequency domain, and its method of decoding a code value from corresponding block ID is almost identical with that of the second embodiment. Hereinafter, a data decoding procedure of the receiver will be described in detail with reference to FIG. **17**.

The receiver identifies sequence ID of each block constituting a corresponding sequence if the sequence is received (S**1701**), and measures a peak for a sequence ID set consisting of the identified sequence IDs (S**1702**). In this embodiment, since one block expresses two bits, first, second, third and four sequences which express 00, 01, 10, 11 form one group. Accordingly, the receiver should select 4 peaks having high frequency in generation as a result of measurement (S**1703**). In this case, the selected peaks are respectively mapped to the first, second, third and fourth sequences in accordance with the order represented in the time/frequency domain. Also, if the first sequence to the fourth sequence are expressed by predetermined group IDs, respectively, first group ID indicating a code value of 00, second group ID indicating a code value of 01, third group ID indicating a code value of 10, and fourth group ID indicating a code value of 11 can be identified. After all, group ID of each block can be identified

through the step S**1703** (S**1704**), and thus the code value of each block can be identified (S**1708**).

If sequence IDs that can not identify group ID exist due to error occurring during the decoding procedure, peaks are again searched for a set of corresponding sequence IDs (S**1705**), and among the peaks, four powerful peaks are detected (S**1706**) so that group IDs are again identified from the detected powerful peaks (S**1707**). Subsequently, code values of the corresponding blocks can be identified from the identified group IDs (S**1708**).

<Fourth Embodiment>

FIG. **18** is a diagram illustrating a method of transmitting data using a sequence according to another preferred embodiment of the present invention.

In the case that the second embodiment and the third embodiment are more expanded, the signal position is changed through pulse position modulation (PPM) so that the length of the sequence can be expanded logically. The PPM originally transmits data with relative pulse delay but PPM based on start position of the sequence is used in this embodiment.

If bits of data to be transmitted are determined, the base station selects a sequence to be used for transmission of corresponding data and determines a length of a block for applying PPM to a corresponding sequence and a length of a duration constituting each block. A sequence corresponding to each block is separately required when a preamble is generated. However, in this embodiment, since circular shift equivalent to a specific duration within a specific block constituting a corresponding sequence is applied for the same sequence, the respective sequences are originally the same as one another but are identified from one another by circular shift.

For example, assuming that one sequence length is divided into four blocks (block **1** to block **4**) and each block is expressed by 2 bits, each block is again divided into four durations (duration **1** to duration **4**) to express values of "00, 01, 10, 11." At this time, four durations included in one block are used as start identification positions of circular shift for a sequence corresponding to a corresponding block. If a preamble to be transmitted has a total length of **256**, block **1** can have a circular shift value of 0~63, block **2** 64~127, block **3** 128~195, and block **4** 196~255. If a specific sequence to be used for transmission of the preamble is determined and "00" is transmitted through block **1**, sequence **1** undergoes circular shift so that a start position is arranged in duration **1** (0~15) of block **1**. If "10" is transmitted to block **2**, sequence **2** undergoes circular shift so that a start position is arranged in duration **3** (96~111) of block **2**. In this way, circular shift is applied for the other blocks and then the respective sequences (sequence **1** to sequence **4**) are grouped into one to generate one preamble. In this case, the number of blocks can be generated from 1 to every random number. Also, a minimum unit of circular shift can be limited to more than a certain value considering channel or timing error.

Meanwhile, the receiver identifies respective sub sequences (sequence **1** to sequence **4**) constituting corresponding sequences by data processing the transmitted sequences, and searches a start position of each of the identified sequences to perform data decoding. This will be described in detail with reference to FIG. **19**.

If a sequence is received in the receiver (S**1901**), the receiver detects ID of the corresponding sequence (S**1903**) and performs full correlation through predetermined data processing for a total of received signals (received sequence) by using the detected result (S**1905**). At this time, a full search algorithm or a differential search algorithm can be used for detection of the sequence ID.

Since the received signal is transmitted from the transmitter by gathering a plurality of sequences, the signal which has undergone the correlation includes a plurality of peaks. In this embodiment, four peaks are detected, and the receiver determines whether each of the detected peaks corresponds to which one of block **1** to block **4** and also corresponds to which duration of a corresponding block (S**1909**) to decode bit order and bit value of the original data (S**1911**).

The method of effectively transmitting the preamble sequence and message through the RACH has been described as above. Finally, a procedure of transmitting a preamble from a user equipment (UE) to a base station (Node-B) and performing synchronization between both the user equipment and the base station will be described based on two embodiments. FIG. **20**A and FIG. **20**B illustrate the two embodiments.

In the embodiment of FIG. **20**A, synchronization is performed in such a manner the user equipment accesses the base station only once. In other words, if the user equipment transmits a preamble and a messing including information required for synchronization to the base station (S**2001**), the base station transmits timing information to the user equipment (S**2003**) and at the same time allocates a resource for transmission of uplink data (S**2005**). The user equipment transmits the uplink data to the base station through the allocated resource (S**2007**).

In the embodiment of FIG. **20**B, for synchronization, the user equipment accesses the base station twice. In other words, if the user equipment transmits a preamble to the base station (S**2011**), the base station transmits timing information to the user equipment and at the same time allocates a resource for a request of scheduling (S**2013**). The user equipment transmits a message for a request of scheduling to the base station through the allocated resource (S**2015**). Then, the base station allocates a resource for transmission of uplink data to the user equipment (S**2017**). In this way, the user equipment transmits to the uplink data to the base station through the secondly allocated resource (S**2019**).

FIG. **21** is a diagram illustrating a method of transmitting data to a receiver through a signaling channel in accordance with one embodiment of the present invention.

Since the receiver should search a start position of a transmission signal in actually realizing the random access channel, it is generally designed that the random access channel has a specific pattern in the time domain. To this end, a preamble sequence may be used so that the random access signal originally has a repetitive pattern. Alternatively, a certain interval may be maintained between sub-carriers in the frequency domain to obtain repetitive characteristics in the time domain. Accordingly, the access modes of FIG. **6**A and FIG. **6**B are characterized in that the start position of the transmission signal should easily be searched in the time domain. To this end, the CAZAC sequence is used. The CAZAC sequence can be classified into GCL sequence (Equation 1) and Zadoff-Chu sequence (Equation 2). Meanwhile, a specific sequence of a long length is preferably used to transmit unique information of the user equipment or the base station through RACH (Random Access Channel) or SCH (Synchronization Channel). This is because that the receiver easily detects corresponding ID and more various kinds of sequences can be used to provide convenience for system design.

However, if message is transmitted with corresponding ID at a sequence of a long length, since the quantity of the

message is increased by $\log_2$ function, there is limitation in message passing with ID only when the sequence exceeds a certain length. Accordingly, in this embodiment, the sequence is divided by several short blocks, and a short signature sequence corresponding to data to be transmitted to each block of the sequence is used instead of specific manipulation such as conjugation or negation.

Referring to FIG. **21**, the sequence is divided into a predetermined number of blocks, and a short signature sequence corresponding to data to be transmitted is applied for each of the divided blocks. A long CAZAC sequence is multiplied by combination of the blocks for which the short signature sequence is applied, whereby a final data sequence to be transmitted to the receiver is completed.

In this case, assuming that the short signature sequence consists of four signatures, the following signature sets can be used. Also, if there is difference between respective data constituting the signature sets, any other signature set may be used without specific limitation.

1) Modulation values: {1+j, 1−j, −1−j, −1+j}

2) Exponential sequence: $\{[\exp(jw_0n)], [\exp(jw_1n)], [\exp(jw_an)], [\exp(jw_3n]\}$, where n=0 . . . Ns, and Ns is a length of each block

3) Walsh Hadamard sequence: {[1111], [1-11-1], [11-1-1], [1-1-11]}, where, if the length Ns of each block is longer than 4, each sequence is repeated to adjust the length.

Examples of the long CAZAC sequence that can be used in the embodiment of FIG. **21** include, but not limited to, one GCL CAZAC sequence, Zadoff-Chu CAZAC sequence, and a sequence generated by concatenation of two or more short GCL or Zadoff-Chu CAZAC sequences having the same length or different lengths.

The aforementioned manner of applying a short signature sequence for data transmission and reception to the long CAZAC sequence is advantageous in that it is less affected by channel than the related art modulation method of transmission data and performance is little decreased even though the number of bits constituting one signature is increased.

FIG. **22** illustrates an example of a receiver and a transmitter for transmitting a preamble and data through RACH, SCH or other channel by using the aforementioned manner.

Since the number of bits can be increased in accordance with increase of signatures, channel coding can be applied for the transmitter. If channel coding is performed, time/frequency diversity can be obtained through an interleaver. Also, bit to signature mapping can be performed to minimize a bit error rate. In this case, Gray mapping can be used. The sequence which has undergone this procedure is mixed with CAZAC and then transmitted.

The receiver detects CAZAC ID, and calculates a log-likelihood ratio (LLR) for each of bits. Then, the receiver decodes transmission data through a channel decoder. Considering complexity according to sequence search of the receiver configured as shown in FIG. **22**, the transmitter preferably uses an exponential sequence as a signature sequence. In this case, the receiver can simply search CAZAC ID through phase difference Fourier Transform. Afterwards, the receiver can again simply calculate LLR from the signature through Fourier Transform.

According to the present invention, the structure on the frequency axis/time axis of the RACH can be identified more definitely. Also, since the RACH resource is divisionally distributed for each frame, even though the user equipment fails to access a specific RACH, the user equipment can directly access RACH of the next frame, whereby access to the base station is improved. Moreover, the user equipment can easily access the RACH even in case of a traffic area of which QoS condition is strict.

Furthermore, according to the present invention, since information is transmitted and received between the user equipment and the base station by using the code sequence, time/frequency diversity can be maximized, and performance attenuation due to influence of channel can be alleviated through the signature manner.

According to the present invention, since the total length of the corresponding sequence can be used with maintaining the advantage of the code sequence according to the related art, data transmission can be performed more efficiently. Also, since the code sequence undergoes predetermined data processing, the quantity of information to be transmitted can be increased and the transmitted data becomes robust to noise or channel.

It will be apparent to those skilled in the art that the present invention can be embodied in other specific forms without departing from the spirit and essential characteristics of the invention. Thus, the above embodiments are to be considered in all respects as illustrative and not restrictive. The scope of the invention should be determined by reasonable interpretation of the appended claims and all change which comes within the equivalent scope of the invention are included in the scope of the invention.

Industrial Applicability

The present invention is applicable to a wireless communication system such as a mobile communication system or a wireless Internet system.

The invention claimed is:

1. A method of transmitting a preamble sequence in a mobile communication system, the method comprising:

repeating a specific sequence, having a length (L), N times to generate a consecutive sequence having a length (N*L);

generating said preamble sequence by concatenating a single cyclic prefix (CP) to a front end of said consecutive sequence; and

transmitting, on a random access channel, said preamble sequence to a receiving side.

2. The method of claim **1**, further comprising generating said specific sequence from a Constant Amplitude Zero Auto Correlation (CAZAC) sequence.

3. The method of claim **2**, further comprising applying a cyclic shift to said specific sequence generated from said CAZAC sequence.

4. The method of claim **3**, wherein a value of said applied cyclic shift is determined as an integer multiple of a predetermined circular shift unit.

5. The method of claim **3**, wherein a value of said applied cyclic shift is used as additional information.

6. The method of claim **3**, wherein applying said cyclic shift comprises multiplying said specific sequence by an exponential sequence.

7. The method of claim **1**, further comprising generating said specific sequence by combining at least two code sequences mapped with at least one information bit.

8. A transmitter for transmitting a preamble sequence in a mobile communication system, the transmitter comprising:

a preamble generation unit configured to generate said preamble sequence by repeating a specific sequence, having a length (L), N times to generate a consecutive sequence having a length (N*L) and concatenating a single cyclic prefix (CP) to a front end of said consecutive sequence;

a transmission unit configured to transmit, on a random access channel, said preamble sequence to a receiving side.

9. The transmitter of claim **8**, wherein said preamble generation unit is further configured to generate said specific sequence from a Constant Amplitude Zero Auto Correlation (CAZAC) sequence.

10. The transmitter of claim **9**, wherein said preamble generation unit is further configured to apply a cyclic shift to said specific sequence generated from said CAZAC sequence.

11. The transmitter of claim **10**, wherein a value of said applied cyclic shift is determined as an integer multiple of a predetermined circular shift unit.

12. The transmitter of claim **10**, wherein a value of said applied cyclic shift is used as additional information.

13. The transmitter of claim **10**, wherein said preamble generation unit is further configured to apply said cyclic shift by multiplying said specific sequence by an exponential sequence.

14. The transmitter of claim **8**, wherein said preamble generation unit is further configured to generate said specific sequence by combining at least two code sequences mapped with at least one information bit.

15. The method of claim **1**, wherein:

said consecutive sequence comprises at least a first sequence, a second sequence, and an N-th sequence; and

said CP is identical to a rear part of said N-th sequence.

16. The transmitter of claim **8**, wherein:

said consecutive sequence comprises at least a first sequence, a second sequence, and an N-th sequence; and

said CP is identical to a rear part of said N-th sequence.

* * * * *