IN THE UNITED STATES DISTRICT COURT

FOR THE DISTRICT OF DELAWARE

AIP ACQUISITION LLC, Plaintiff, v. LEVEL 3 COMMUNICATIONS, LLC, Defendant.	)	C.A. No. 12-617-GMS REDACTED: PUBLIC VERSION

DEFENDANT LEVEL 3 COMMUNICATIONS, LLC'S ANSWERING BRIEF IN OPPOSITION TO PLAINTIFF AIP ACQUISITION LLC'S MOTION TO AMEND

OF COUNSEL:
R. Laurence Macon
AKIN GUMP STRAUSS HAUER & FELD LLP
300 Convent St., Suite 1600
San Antonio, TX 78205
(210) 281-7222

David R. Clonts
Manoj S. Gandhi
Ifti Ahmed
AKIN GUMP STRAUSS HAUER & FELD LLP
1111 Louisiana Street, 44th Floor
Houston, TX 77002-5200
(713) 220-5800

John W. Shaw (No. 3362)
Jeffrey T. Castellano (No. 4837)
Andrew E. Russell (No. 5382)
SHAW KELLER LLP
300 Delaware Avenue, Suite 1120
Wilmington, DE 19801
(302) 298-0700
jshaw@shawkeller.com
jcastellano@shawkeller.com
arussell@shawkeller.com
Attorneys for Defendant
Level 3 Communications, LLC

Dated: December 19, 2013

TABLE OF CONTENTS

I. INTRODUCTION 1

II. NATURE AND STAGE OF THE PROCEEDINGS 1

III. SUMMARY OF ARGUMENT 2

IV. STATEMENT OF FACTS 4

V. LEGAL STANDARD 6

VI. ARGUMENT 8

A. Level 3 Will Be Prejudiced By The Addition Of New Services and Theories At The End Of Discovery And After *Markman* Briefing 8

B. AIP Unduly Delayed Filing Its Motion To Amend 10

C. The Motion To Amend Is Futile 11

D. AIP Has Violated The Local Rules Regarding Briefing And The Meet-And-Confer Requirement 14

VII. CONCLUSION 15

TABLE OF AUTHORITIES

CASE **PAGE(S)**

Allergan, Inc. v. Alcon, Inc.,
C.A. No. 04-968-GMS (D. Del. Jan. 17, 2006) 14

Alzheimer's Inst. of Am. v. Elan Corp. PLC,
274 F.R.D. 272 (N.D. Cal. 2011).....7, 10

Arthur v. Maersk,
434 F.3d 196 (3d Cir. 2006).....7, 10

In re Bill of Lading Transmission & Processing Sys. Patent Litig.,
681 F.3d 1323 (Fed. Cir. 2012).....12, 13

Bonutti Skeletal Innovations LLC v. Smith & Nephew, Inc.,
2013 WL 6058472 (D. Del. Nov. 18, 2013) 13

In re Burlington Coat Factory Sec. Litig.,
114 F.3d 1410 (3d Cir. 1997).....7, 8

Commil USA, LLC v. Cisco Sys., Inc.,
720 F.3d 1361 (Fed. Cir. 2013).....14

Cureton v. Nat'l Collegiate Athletic Ass'n,
252 F.3d 267 (3d Cir. 2001).....7, 8, 9

DeWitt v. Penn-Del Directory Corp.,
912 F. Supp. 707 (D. Del. 1996).....15

Fujitsu Ltd. v. Belkin Int'l, Inc.,
2012 WL 4497966 (N.D. Cal. Sept. 28, 2012) 14

Global-Tech Appliances, Inc. v. SEB S.A.,
131 S. Ct. 2060 (2011).....12, 13

j2 Global Commc'ns, Inc. v. EasyLink Servs. Int'l Corp.,
2011 WL 1532048 (C.D. Cal. Apr. 21, 2011) 7, 10

Jordan v. Bellinger,
2000 WL 1239956 (D. Del. Aug. 28, 2000) 14

Kolmes v. World Elastic Corp.,
1995 WL 918081 (M.D.N.C. Sept. 18, 1995).....14

Lorenz v. CSX Corp.,
1 F.3d 1406 (3d Cir. 1993).....8, 10

Semiconductor Energy Lab. Co., Ltd., v. Sanyo N. Am. Corp.,
2001 WL 194303 (D. Del. Feb. 22, 2001).....7, 8, 9

Superior Indus., LLC v. Thor Global Enters. Ltd.,
700 F.3d 1287 (Fed. Cir. 2012).....13

Venetec Int'l, Inc. v. Nexus Med., LLC,
541 F. Supp. 2d 612 (D. Del. 2008).....11

RULES

D. DEL. L.R. 7.1.1 15

D. DEL. L.R. 7.1.3 .....14, 15

FED. R. CIV. P. 12(b)(6) 8

FED. R. CIV. P. 15(a) 6, 7, 10, 11

I. INTRODUCTION

More than eighteen months after it sued Level 3 Communications, LLC ("Level 3"), and one day before the Court's deadline for amendment of pleadings, AIP Acquisition LLC ("AIP") asks the Court to allow it to assert a claim of indirect infringement against Level 3. AIP's motion to amend its complaint would expand the scope of the case and should be denied on the grounds of prejudice, undue delay, and futility.

AIP seeks to more than double the number of categories of accused services, and seeks to add a new claim to the case. The proposed amendment will prejudice Level 3 because Level 3 will be forced to engage in additional costly discovery on the new services and new infringement theory, and seek construction of additional claims or claim elements on the eve of the *Markman* hearing. Furthermore, AIP unduly delayed in seeking amendment—the new allegations are primarily and expressly based on public information that has been known to AIP since before the Rule 16 scheduling conference a year ago. Moreover, AIP's motion is futile because AIP's proposed amended complaint fails to state a claim against Level 3 for inducement of infringement.[1]

II. NATURE AND STAGE OF THE PROCEEDINGS

AIP filed its complaint in this action on May 17, 2012. The complaint included allegations of direct infringement only, based on alleged infringement by a few of Level 3's services. D.I. 1 at ¶ 17, 25, 28, 31, 34. Following a scheduling conference, a scheduling order was entered on January 23, 2013, setting a deadline of December 1, 2013, for motions for leave to amend pleadings. D.I. 14.

[1] Level 3 does not oppose AIP's motion to amend to the extent it removes allegations of infringement of two patents already dismissed from the case by stipulation and by order of the Court. D.I. 45 at 1; D.I. 22 (stipulation of partial dismissal); D.I. 23 (order granting stipulation of partial dismissal).

Over the past year, the parties have conducted extensive discovery with the understanding that the scope of the case was consistent with what AIP included in its complaint. For example, AIP served its disclosures pursuant to the Court's Default Standard for Discovery, Paragraph 4(a) on February 14, 2013, identifying the same services that it accused in its complaint. D.I. 16; *see* Exh. A (excerpts from AIP's Paragraph 4(a) disclosures). A few months later, on May 10, 2013, AIP served its Paragraph 4(c) disclosures, providing claim charts for the services and infringement theories that it identified in its complaint. D.I. 21; *see* Exh. B (excerpts from AIP's Paragraph 4(c) disclosures). Level 3 has since been working diligently toward substantially completing its discovery with regard to AIP's current claims. Fact discovery ends in less than two months, on February 14, 2014. D.I. 14.

In addition to fact discovery on the accused services, the parties have exchanged claim terms and proposed constructions and have completed *Markman* briefing on all of the asserted patents. During the exchange of constructions, Level 3 significantly reduced the number of claim terms for which it would seek construction, based on the scope of the case at the time. A *Markman* hearing is scheduled for next month, January 16, 2014. D.I. 14.

AIP filed its motion to amend on December 1, 2013. Prior to filing its motion to amend, AIP provided no indication whatsoever that it intended to expand its infringement allegations, accused services, or theory of the case; on the contrary, at every turn AIP affirmed that the scope of the case was reflected in the allegations and claims of the complaint filed in May 2012.

III. SUMMARY OF ARGUMENT

1. AIP's proposed amended complaint drastically expands the scope of the case by adding an indirect infringement claim, and by accusing new categories of services. If AIP is permitted to amend, Level 3 will be prejudiced by having to conduct additional discovery and being subject to new discovery requests by AIP. Moreover, Level 3 will have to revise its

litigation strategy and will be forced to engage in costly and burdensome research and investigation that goes along with any such revision. Finally, Level 3 will be forced to ask the Court to construe additional terms that may only become relevant as a result of AIP's proposed amendment adding more accused services and new theories of infringement, thereby placing a burden on both the Court and Level 3.

2. AIP has had access to all of the information it relies upon in its amended pleading for nearly a year, but waited until now, in the middle of the claim construction process and close to the end of fact discovery, to attempt to amend its pleadings. This delay is neither explained nor justified by AIP. Although AIP filed its motion one day before the deadline for amendment of pleadings, it has had all of the information necessary for the proposed pleading for at least ten months, and the Court's deadline cannot provide AIP with an excuse for its delay.

3. AIP's motion to amend is futile, because the proposed amended complaint fails to state a claim for induced infringement against Level 3. AIP has not alleged that Level 3 had any knowledge of the patents prior to filing of this lawsuit. AIP has also failed to allege facts that show Level 3 had knowledge of actual infringement by telecommunications providers at any time. And AIP has failed to allege any facts that even remotely suggest that Level 3 had specific intent to induce infringement. AIP has therefore failed to state a claim for inducement upon which relief could be granted. Moreover, under Federal Circuit law, Level 3's good-faith belief of invalidity of the asserted patents negates the intent required to show induced infringement.

4. AIP's motion is procedurally deficient. AIP's half-page form motion, with no substantive arguments or citation to authority, is not a full and fair opening brief and fails to provide the Court with a reason to allow AIP to amend its pleadings. Additionally, AIP's attempt to meet and confer was deficient under the Local Rules.

IV. STATEMENT OF FACTS

Rather than file its motion to amend when it first had access to the underlying facts, AIP waited until December 1, 2013—the last day before the amendment deadline, just weeks before the close of fact discovery and the *Markman* hearing, and after claim construction briefing. If amendment is permitted, Level 3 will be forced to undergo unnecessarily rushed and burdensome discovery, amend its claim construction positions, and re-construct its entire litigation strategy.

In its original complaint, D.I. 1, AIP accused Level 3 of directly infringing by making, using, selling, or offering for sale five specific categories of Level 3 services:

(a) Enterprise Long Distance Service;

(b) ISDN PRI Local Voice Service;

(c) Digital Trunk Local Voice Service;

(d) SIP Trunking Service; and

(e) Voice Termination Service.

D.I. 1 ¶ 17. As discovery progressed over the past year, AIP served multiple rounds of disclosures under the Court's Default Standard, paragraphs 4(a) and 4(c), listing and charting only the services accused in the complaint, and asserting only direct infringement. At no point prior to the filing of its motion did AIP indicate that it would be expanding its claims beyond those services and that theory of infringement.

In reliance on AIP's allegations, Level 3 has been diligently collecting and producing documents relating only to the specifically accused services under the infringement theory provided by AIP in the complaint and in its disclosures. Thus far, Level 3 has performed numerous interviews with its employees and employees of its equipment vendors, and as a result, collected and produced thousands of documents in reliance on AIP's disclosures and discovery

responses from AIP. Level 3 believes it is close to substantially completing its discovery obligations under the current scope of the case.

Additionally, Level 3 also chose claim terms to put forth for construction by the Court based on this set of accused services, and AIP's theory of direct infringement. And, of course, Level 3 researched, asserted, and developed its defenses (including non-infringement) based on AIP's accused services.

Now, almost nineteen months after the original complaint was served, near the end of fact discovery, and with a *Markman* hearing looming, AIP seeks to add at least twelve new categories of services that allegedly form the basis of an indirect infringement claim—many of which are services provided by third parties. The newly-identified services that AIP alleges are provided by Level 3 include: VOIP enhanced local service, Voice Termination, CrossRoads IP services, Link Dark Fiber Service, and Link Intercity Private Line Service. D.I. 45, Exh. 1 at ¶ 23. AIP further alleges infringement based on several services provided by third parties, including Charter's "Charter Phone service" and Time Warner's "Digital Home Phone Service, Business Class Phone Service, and Business Class PRI Service." *Id.* at ¶¶ 24, 27.

In support of its new allegations, AIP relies on information sourced primarily from public documents, all of which were available at least ten months ago. In particular, AIP's amended complaint relies on two press releases, dated February 6, 2006, and December 11, 2012, as well as a May 19, 2008, regulatory filing, and on the complaints that AIP itself filed against Charter and Time Warner (the alleged "Third Party Infringers" in AIP's new indirect infringement

theory) on August 13, 2012, and February 5, 2013, respectively. (D.I. 45, Exh. 1 and exhibits thereto).[2]

It was not until November 27, 2013, that AIP informed Level 3 of its intent to amend its complaint.[3] AIP did not inform Level 3 about the specific nature of its new indirect infringement allegations, the asserted patent, or the newly accused services. In fact, Level 3 did not have much notice of the substance of AIP's motion to amend until AIP's one-page, barebones motion along with its proposed amended complaint were filed on December 1, 2013. AIP's motion does not provide any reasons for the Court to permit amendment, other than the fact that the motion was filed one day before the amendment deadline. AIP does not address prejudice, delay, or the legal sufficiency of its amended pleadings in its motion. *See* D.I. 45.

AIP's proposed amended complaint alleges indirect infringement only of the '879 patent, but AIP does not allege any facts that relate to Level 3's pre-suit knowledge of the patent, nor does AIP allege facts that show knowledge of, or intent to induce, post-suit infringement by the alleged direct infringers.[4]

V. LEGAL STANDARD

Under FED. R. CIV. P. 15(a), amendment more than 21 days after the filing of the original pleading requires leave of court.[5] Although Rule 15(a) states that the court should "freely give

---

[2] Even at this stage, AIP seeks to keep the door open for further amendment of its pleadings. D.I. 45, Exh. 1 at ¶¶ 32, 33 ("Discovery may identify additional Third Party Infringers."). Level 3 reserves its rights to oppose any such attempts.

[3] *See* Exh. C (e-mail chain between M. Gandhi and F. Villegas). Delaware counsel for Level 3 was not copied on the motion. Level 3 responded that it opposed the amendment. *Id.*

[4] It is Level 3's belief that AIP has not conducted a proper pre-filing investigation or evaluation of the services that it alleges indirect infringement against, or of the relationship between Level 3 and its customers.

[5] If a motion to amend arises out of facts that occurred after the complaint, it is properly interpreted as a motion to supplement under Rule 15(d), rather than a motion to amend under

leave when justice so requires," amendment is not a foregone conclusion. As this Court has recognized, "a court may deny a motion to amend if there is sufficient reason to do so." *Semiconductor Energy Lab. Co., Ltd., v. Sanyo N. Am. Corp.*, C.A. No. 00–018–GMS, 2001 WL 194303, at *3-4 (D. Del. Feb. 22, 2001) (denying motion to amend on the grounds of undue delay and prejudice). "Among the grounds that could justify a denial of leave to amend are undue delay, bad faith, dilatory motive, prejudice, and futility." *In re Burlington Coat Factory Sec. Litig.*, 114 F.3d 1410, 1434 (3d Cir. 1997).

Amendment would cause prejudice where, for example, it would require a party to engage in substantial additional discovery, overhaul its litigation strategy, or forego claim construction positions. *See*, *e.g.*, *Cureton v. Nat'l Collegiate Athletic Ass'n*, 252 F.3d 267, 273 (3d Cir. 2001) (prejudice may be found where it would cause "additional discovery, cost, and preparation to defend against new facts or new theories."); *Semiconductor Energy*, C.A. No. 00–018–GMS, 2001 WL 194303 at *3-4 (denying motion to amend where "injecting [new claims] into the case would require both parties to engage in an entirely new discovery aspect of the case."); *Alzheimer's Inst. of Am. v. Elan Corp. PLC*, 274 F.R.D. 272, 276 (N.D. Cal. 2011) (denying motion to amend where amendment would preclude defendant from arguing for desired claim constructions); *j2 Global Commc'ns, Inc. v. EasyLink Servs. Int'l Corp.*, CV 09-04189 DDP AJWX, 2011 WL 1532048, at *2-3 (C.D. Cal. Apr. 21, 2011).

A delay in seeking amendment becomes "undue" when, for example, "a party fails to take advantage of previous opportunities to amend, without adequate explanation." *Arthur v.*

Rule 15(a). *Abbott Diabetes Care, Inc. v. DexCom, Inc.*, C.A. 05-590 GMS, 2006 WL 2375035, at *4 (D. Del. Aug. 16, 2006). The same standard applies for Rules 15(a) and 15(d). *Masimo Corp. v. Philips Electrs. N. Am. Corp.*, C.A. No. 09-80-JJF-MPT, 2010 WL 1609899, at *2 (D. Del. Apr. 20, 2010).

Maersk, 434 F.3d 196, 204 (3d Cir. 2006) (quoting *Lorenz v. CSX Corp.*, 1 F.3d 1406, 1414 (3d Cir. 1993)). Prejudice to the non-moving party is also relevant in determining whether a delay is undue. *See*, *e.g.*, *Semiconductor Energy*, 2001 WL 194303, at *3.

"Futility" means that the complaint, as amended, would fail to state a claim upon which relief could be granted. *Burlington*, 114 F.3d at 1434. In assessing "futility," the District Court applies the same standard of legal sufficiency as applies under Rule 12(b)(6). *Id.*

VI. ARGUMENT

A. Level 3 Will Be Prejudiced By The Addition Of New Services And Theories At The End Of Discovery And After *Markman* Briefing

If AIP is permitted to amend its complaint to add myriad new services and an entirely new infringement theory, Level 3 will face discovery costs far beyond those it would have faced if AIP had amended its complaint in a timely manner.

The Third Circuit and this Court have recognized that prejudice may be evidenced by the hardship of facing new theories and conducting additional discovery. *Cureton*, 252 F.3d at 273 ("The issue of prejudice requires that we focus on the hardship to the defendants . . . . Specifically, we have considered whether allowing an amendment would result in additional discovery, cost, and preparation to defend against new facts or new theories."); *Semiconductor Energy*, 2001 WL 194303 at *3-4 (holding that amendment would cause undue prejudice where "discovery is substantially complete" and where "injecting [new claims including willful infringement] into the case would require both parties to engage in an entirely new discovery aspect of the case.").

Permitting AIP to expand the scope of the case by adding new services and a new indirect infringement theory will expand the scope of discovery—Level 3 will be forced to again gather, review, and produce documents and information (internally and from third parties) to respond to

AIP's discovery requests and to support its own claims and defenses. In addition, amendment would require Level 3 to commit substantial resources to modifying its litigation strategy including researching, finding support for, and asserting new and modified defenses and possibly counterclaims for the new services and the new indirect infringement theory.

This is exactly the type of additional burden (and resultant prejudice) addressed in *Cureton* and *Semiconductor Energy*.[6] Since May of 2012, Level 3 has been relying on the fact that the case consists of a direct infringement assertion against a limited number of Level 3 services. These new claims are "an entirely new discovery aspect of the case," and if they are injected without prior warning at this point in the schedule, Level 3 will be severely and unjustifiably prejudiced.[7]

Aside from the burden of new discovery, the fact that the claim construction process is nearly complete adds to the prejudice that would be visited upon Level 3 by amendment. Permitting amendment will preclude Level 3 from pursing construction of claim elements that would be relevant to the new allegations of infringement AIP seeks to add (absent additional briefing). That is, Level 3 would be forced to revisit its claim construction position to take into account arguments and claim terms that may not have been relevant or applicable under the original set of facts, but which become so in light of the amended complaint's allegations. At this time, Level 3 has asked the Court for construction of only three terms, and the inclusion of

---

[6] It should be noted that in *Semiconductor Energy*, the parties had not yet begun claim construction briefing, but the Court denied the motion to amend nonetheless. 2001 WL 194303 at *3. The argument for denial of the motion in this case is therefore even stronger here, where briefing on claim construction is complete.

[7] A simple extension of the discovery deadline will not cure this prejudice because the dramatic expansion in the scope of the case when so much of the discovery and *Markman* process is complete will increase burden and cost regardless of how much time Level 3 has to catch up. Prejudice can only be avoided by denial of AIP's motion.

numerous new accused services would likely require Level 3 to seek construction of additional claim terms.

Other courts have recognized that allowing a plaintiff to amend its complaint after claim construction briefing is prejudicial if the amendment would have affected the claim constructions offered by the opponent. *See, e.g., Alzheimer's Inst. of Am.*, 274 F.R.D. at 276 (denying, before the *Markman* hearing, a motion to amend to assert infringement claims for a second patent, already asserted against other defendants, because the defendant had not participated in the claim construction briefing for that patent, and would have argued for different constructions); *j2 Global Commc'ns*, 2011 WL 1532048 at *2-3 (denying motion to amend under Rule 15(b) where plaintiff sought to add a patent to the case after the *Markman* hearing, because defendant was unable to present its arguments, despite the fact that the patent had been asserted against other defendants).

With fact discovery set to close in early 2014, claim construction briefing finished, and the *Markman* hearing looming, amendment is unduly prejudicial and AIP's delay inexcusable.

B. AIP Unduly Delayed Filing Its Motion To Amend

AIP's motion to amend should be denied because AIP unduly delayed in filing, in violation of Rule 15(a). The Third Circuit has stated that "'at some point, . . . delay will become 'undue,' placing an unwarranted burden on the court' . . . . When a party fails to take advantage of previous opportunities to amend, without adequate explanation, leave to amend is properly denied." *Arthur v. Maersk*, 434 F.3d 196, 204 (3d Cir. 2006) (quoting *Lorenz v. CSX Corp.*, 1 F.3d 1406, 1414 (3d Cir. 1993)).

AIP's basis for its nearly year-long delay in filing its motion to amend is unclear.[8] The facts that AIP relies on in its amended complaint were publicly available for at least the past ten months, and three of the five documents that it cites in support of its motion are over a year old. AIP's motion is silent regarding the delay.

Prior to filing its motion to amend, AIP provided no indication to Level 3 or the Court that it intended to add new accused services or a claim of indirect infringement; instead, AIP continued to permit Level 3 to rely on the fact that the only services and claims at issue were those set forth in the original complaint as well as AIP's discovery response and disclosures.

AIP served its disclosures pursuant to the Court's Default Standard for Discovery, Paragraph 4(a) on February 14, 2013, and pursuant to Paragraph 4(c) on May 10, 2013. D.I. 16, 21; *see* Exhs. A and B. At the time of these disclosures, AIP clearly knew of the facts that it alleges in its proposed amended complaint and could have easily sought leave to amend its pleadings. Yet, AIP waited until the last minute. After a year of reliance by Level 3, AIP filed its motion to amend on the very last calendar day before the deadline. All the available facts indicate that AIP could have made its motion much earlier and avoided substantial prejudice that would be caused by the amendment. AIP has thus unduly delayed in filing its motion to amend.

C. The Motion To Amend Is Futile

AIP's proposed amendment is futile because the amended complaint fails to state a claim

[8] AIP does not allege any facts supporting the reasonableness of its delay in its motion. D.I. 45. Although AIP's motion to amend was filed just before the deadline for amendment of the pleadings, that fact alone does not excuse the nearly year-long period where AIP had the information it now uses to support its amended complaint. Delay under Rule 15(a) is independent of the question of whether the scheduling order was violated under Rule 16. *See, e.g.*, *Venetec Int'l, Inc. v. Nexus Med.*, LLC, 541 F. Supp. 2d 612, 617-18 (D. Del. 2008) (distinguishing Rule 15(a) regarding amended pleadings from Rule 16(b) regarding modifications to the scheduling order).

for inducement of infringement against Level 3 at least because it fails to adequately allege the requisite elements of knowledge and specific intent.[9]

Induced infringement requires that the alleged indirect infringer have knowledge of the patent and knowledge that the acts of the direct infringer constitute patent infringement. *See Global-Tech Appliances, Inc. v. SEB S.A*., 131 S. Ct. 2060, 2067–68 (2011). The knowledge requirement of *Global-Tech* may be satisfied by showing actual knowledge or willful blindness. *Id*. at 2072.

AIP's proposed amended complaint fails to allege that Level 3 had pre-suit knowledge of AIP's asserted patents-in-suit, let alone knowledge of possible infringement of the '879 patent. AIP did not notify Level 3 of the '879 patent before this lawsuit was filed, and the proposed amended complaint does not contain any allegations of knowledge of the patents-in-suit before the service of the complaint on May 21, 2012. D.I. 45, Exh. 1 at ¶¶ 29, 31. Therefore, at a minimum, AIP's amended complaint fails to state a claim for pre-suit indirect infringement.

Furthermore, AIP has failed to allege facts that demonstrate Level 3 has the requisite knowledge of infringement or intent to induce infringement at any time (pre-suit or post-suit). Although, as AIP points out, Level 3 provides certain accused Level 3 services to the named customers, agreements with these customers were entered into well before Level 3 had any notice of the '879 patent, and therefore these business relationships alone cannot support an allegation of knowledge of infringement, or intent to induce infringement of the '879 patent. *See*

[9] "[A] plaintiff's obligation to provide the 'grounds' of his entitlement to relief requires more than labels and conclusions, and a formulaic recitation of the elements of a cause of action will not do." *Bell Atl. Corp. v. Twombly*, 550 U.S. 544, 555 (2007) (citation omitted). The Federal Circuit has held that "because Form 18 addresses only direct infringement, we must look to Supreme Court precedent for guidance regarding the pleading requirements for claims of indirect infringement." *In re Bill of Lading Transmission & Processing Sys. Patent Litig*., 681 F.3d 1323, 1337 (Fed. Cir. 2012).

D.I. 45, Exh. 1 at ¶ 30. Even if it is accepted that Level 3 had knowledge of the patent as of the filing of the original complaint, it does not follow that Level 3 can be assumed to have knowledge of the alleged infringement by its customers or intent to induce such infringement.

Indeed, as this Court recently found, indirect infringement cannot be based solely on an allegation of knowledge of the patent and use of allegedly infringing services or products by customers. *See Bonutti Skeletal Innovations LLC v. Smith & Nephew, Inc*., No. CV 12-1111-GMS, 2013 WL 6058472, at *1 n.5 (D. Del. Nov. 18, 2013). In *Bonutti*, the Court dismissed indirect infringement claims on the grounds that "[a]llegations that [defendant] knew of [plaintiff]'s patents and of its customers' use of [defendant]'s products do not suffice to establish that defendant also knew that its customers' use of [defendant]'s own products would amount to infringement of [plaintiff]'s patents." *Id.* (citing *In Re Bill of Lading*, 681 F.3d at 1323); *see also Superior Indus., LLC v. Thor Global Enters. Ltd*., 700 F.3d 1287, 1296 (Fed. Cir. 2012) (affirming dismissal of induced infringement claims where plaintiff failed to allege any facts to support a reasonable inference that defendant "specifically intended to induce infringement of the [asserted] Patent or that it knew it had induced acts that constitute infringement."). As in *Bonutti*, AIP has failed to allege facts that establish anything beyond the fact that Level 3 had knowledge of the patent as of May 21, 2012 and that Level 3 has relationships with its customers related to Level 3's services. This cannot support a claim of indirect infringement. Further, based on the discovery that has occurred in the case thus far, there is also no evidence that even suggests, nor has AIP specifically alleged, that Level 3 was willfully blind to the alleged infringement of AIP's '879 patent. *Global-Tech,* 131 S. Ct. at 2070-71.

Moreover, the Federal Circuit has held that "evidence of an accused inducer's good-faith belief of invalidity may negate the requisite intent for induced infringement." *Commil USA, LLC*

v. Cisco Sys., Inc., 720 F.3d 1361, 1368 (Fed. Cir. 2013), *reh'g denied*, No. 2012-1042, 2013 WL 6500270 (Fed. Cir. Oct. 25, 2013).[10] There is ample evidence of Level 3's strong belief that the '879 patent is invalid. AIP's filing of an *inter partes* review petition and the Patent Trial and Appeal Board's subsequent finding of a "reasonable likelihood" that every asserted claim of the '879 patent is invalid, clearly support Level 3's lack of specific intent. *See* PTAB's Decision Instituting IPR of the '879 Patent (Exh. D). There is therefore ample evidence to support Level 3's good-faith belief of invalidity of the '879 patent that would "negate the requisite intent for induced infringement." *Commil*, 720 F.3d at 1368. AIP's attempt to add a claim for inducement of infringement against Level 3 at this stage of the case is futile and should be rejected.

D. AIP Has Violated The Local Rules Regarding Briefing And The Meet-And-Confer Requirement

AIP's brief as well as its attempt at a meet and confer with Level 3 are deficient under the Local Rules. The motion barely discusses the propriety of the amendment other than its supposed timeliness. Local Rule 7.1.3(c)(2) states that "[t]he party filing the opening brief shall not reserve material for the reply brief which should have been included in a full and fair opening brief." *See Allergan, Inc. v. Alcon, Inc.*, C.A. No. 04-968-GMS, at 1-2 (D. Del. Jan. 17, 2006) (calling defendants' reservation of arguments for a reply brief regarding justification for a motion to amend "the very definition of sandbagging") (attached as Exh. E); *see Jordan v. Bellinger*, C.A. No. 98–230–GMS, 2000 WL 1239956, at n.7 (D. Del. Aug. 28, 2000) (refusing to consider arguments that were withheld until a reply brief). Level 3 will oppose any attempts by AIP to introduce new arguments in its reply brief in violation of L.R. 7.1.3(c)(2). AIP's

[10] *See also Fujitsu Ltd. v. Belkin Int'l, Inc*., No. 10–cv–3972, 2012 WL 4497966, at *34-36, 39-41 (N.D. Cal. Sept. 28, 2012) (considering reexamination proceedings as relevant to induced infringement); *Kolmes v. World Elastic Corp*., No. 93-cv-719, 1995 WL 918081, at *10 (M.D.N.C. Sept. 18, 1995) (no induced infringement because defendants "had a good faith belief in the invalidity of the [] patent" as evidenced by their "requesting reexamination by the PTO").

decision not to present arguments or facts regarding prejudice, delay, or futility in its opening brief is a conscious waiver on those issues.

Furthermore, AIP failed to satisfy the Local Rule requirement to meet and confer prior to filing its motion. AIP's only communication to Level 3 prior to filing was a two-sentence e-mail to Level 3's counsel, stating that AIP intended to file a motion to amend and asking whether Level 3 would oppose. AIP did not include Level 3's Delaware counsel on that email, and made no attempt to verbally meet and confer or discuss the substance of the motion in any way. Exh. C. For example, AIP's email did not mention the additional services or the identity of any alleged "Third Party Infringers."

This poor attempt at a meet and confer does not represent a "reasonable effort" to resolve the dispute and is insufficient under Local Rule 7.1.1 (which requires "reasonable effort . . . to reach agreement with the opposing party on the matters set forth in the motion"). *See DeWitt v. Penn-Del Directory Corp.*, 912 F. Supp. 707, 713 (D. Del. 1996) (striking a motion to compel after a similarly cursory endeavor to meet and confer). AIP's failure to participate in the dispute resolution procedures set forth in the Local Rules, alone, justifies a denial of its motion.

VII. CONCLUSION

The amendment sought by AIP would require additional burdensome discovery and will likely raise new claim construction disputes after *Markman* briefing has closed in this case. As such, the amendment is prejudicial and unduly burdensome to the Court and Level 3. In addition, AIP unreasonably delayed in bringing the motion. Moreover, the motion is futile with respect to claims that AIP seeks to add. In light of these facts, combined with AIP's failure to meet and confer, Level 3 urges the Court to deny AIP's motion.

Respectfully submitted,

/s/ Jeffrey T. Castellano

John W. Shaw (No. 3362)
Jeffrey T. Castellano (No. 4837)
Andrew E. Russell (No. 5382)
SHAW KELLER LLP
300 Delaware Avenue, Suite 1120
Wilmington, DE 19801
(302) 298-0700
jshaw@shawkeller.com
jcastellano@shawkeller.com
arussell@shawkeller.com
Attorneys for Defendant
Level 3 Communications, LLC

OF COUNSEL:
R. Laurence Macon
AKIN GUMP STRAUSS HAUER & FELD LLP
300 Convent St., Suite 1600
San Antonio, TX 78205
(210) 281-7222

David R. Clonts
Manoj S. Gandhi
Ifti Ahmed
AKIN GUMP STRAUSS HAUER & FELD LLP
1111 Louisiana Street, 44th Floor
Houston, TX 77002
(713) 220-5800

Dated: December 19, 2013

EXHIBITS A THROUGH C

REDACTED IN THEIR ENTIRETY

EXHIBIT D

Trials@uspto.gov
Tel: 571-272-7822

Paper 14
Entered: October 31, 2013

UNITED STATES PATENT AND TRADEMARK OFFICE

BEFORE THE PATENT TRIAL AND APPEAL BOARD

LEVEL 3 COMMUNICATIONS, LLC
Petitioner

v.

AIP ACQUISITION, LLC
Patent Owner

Case IPR2013-00296
Patent 7,724,879 B2

Before HOWARD B. BLANKENSHIP, JUSTIN T. ARBES, and JAMES B. ARPIN, *Administrative Patent Judges*.

ARPIN, *Administrative Patent Judge*.

DECISION
Institution of *Inter Partes* Review
37 C.F.R. § 42.108

I. INTRODUCTION

Level 3 Communications, LLC ("Petitioner") filed a petition to institute an *inter partes* review of claims 1-15 (Paper 6; "Pet.") of Patent No. US 7,724,879 B2 (Ex. 1001; "the '879 Patent"). AIP Acquisition, LLC ("Patent Owner") filed a patent owner preliminary response (Paper 13; "Prelim. Resp."). We have jurisdiction under 35 U.S.C. § 314.

The standard for instituting an *inter partes* review is set forth in 35 U.S.C. § 314(a) which provides as follows:

> THRESHOLD.—The Director may not authorize an *inter partes* review to be instituted unless the Director determines that the information presented in the petition filed under section 311 and any response filed under section 313 shows that there is a reasonable likelihood that the petitioner would prevail with respect to at least 1 of the claims challenged in the petition.

Upon consideration of the petition and patent owner preliminary response, we determine that the information presented in the petition establishes that there is a reasonable likelihood that Petitioner would prevail with respect to claims 1-15 of the '879 Patent. Accordingly, pursuant to 35 U.S.C. § 314, we authorize an *inter partes* review to be instituted as to claims 1-15 of the '879 Patent.

A. Related Proceedings

The '879 Patent is involved in concurrent district court litigation. On May 17, 2012, Patent Owner filed an action against Petitioner alleging infringement of the '879 Patent, *AIP Acquisition LLC v. Level 3*

Communications, LLC, Civ. Action No. 12-617 (D. Del.). Petitioner was served with the complaint in this action on May 21, 2012. Related district court litigation regarding the '879 Patent is: *AIP Acquisition LLC v. iBasis, Inc.*, Civ. Action No. 12-616 (D. Del.), filed May 17, 2012; *AIP Acquisition LLC v. Time Warner Cable Inc., et al.,* Civ. Action No. 12-01692 (D. Del.), filed December 11, 2012; *AIP Acquisition LLC v. Cox Communications Inc., et al.*, Civ. Action No. 12-01691 (D. Del.), filed December 11, 2012; *AIP Acquisition LLC v. Comcast Corporation, et al.*, Civ. Action No. 12-01690 (D. Del.), filed December 11, 2012; *AIP Acquisition LLC v. Cablevision Systems Corporation, et al.*, Civ. Action No. 12-01688 (D. Del.), filed December 11, 2012; and *AIP Acquisition LLC v. Charter Communications Inc., et al.*, Civ. Action No. 12-01689 (D. Del.), filed December 11, 2012. *See* Pet. 1-2.

B. The '879 Patent

The '879 Patent relates to methods for allowing telecommunications services to operate over telecommunications networks (e.g., the Public Switched Telephone Network or "PSTN") and data networks (e.g., digital networks). Prelim. Resp. 2-3. For example, claimed methods allow the Internet, or another data network, to function like a telecommunications network. Ex. 1001, col. 6, ll. 36-38. Calling parties may dial remote locations for the price of a local access and service fee to have voice conversations with called parties in those locations and to avoid using long distance carriers. *Id.* at ll. 38-42. In order to make such calls, a local system

may be dialed via computer access or a regular telephone, which prompts the calling party for the called party's telephone number or other identification. *Id*. at ll. 42-44. The calling party then is connected to the called party over the Internet or another data network, such as by connecting the parties via a node through a local call or through other networks. *Id.* at ll. 44-47. For example, a calling party may access a node that converts the telephone transmission (e.g., the voice transmission) into data supported by the network chosen by the node. *Id.* at ll. 47-49. In this example, a network may connect to another node proximate to the called party that then converts the data transmission back into a voice communication and converts the voice communication into a local call to the called party with the called party node operated by an independent service provider located elsewhere, such as in another country. *Id.* at ll. 49-54.

A method, as recited in the challenged claims, is illustrated by the conceptual block diagram in Figure 9, reproduced below:

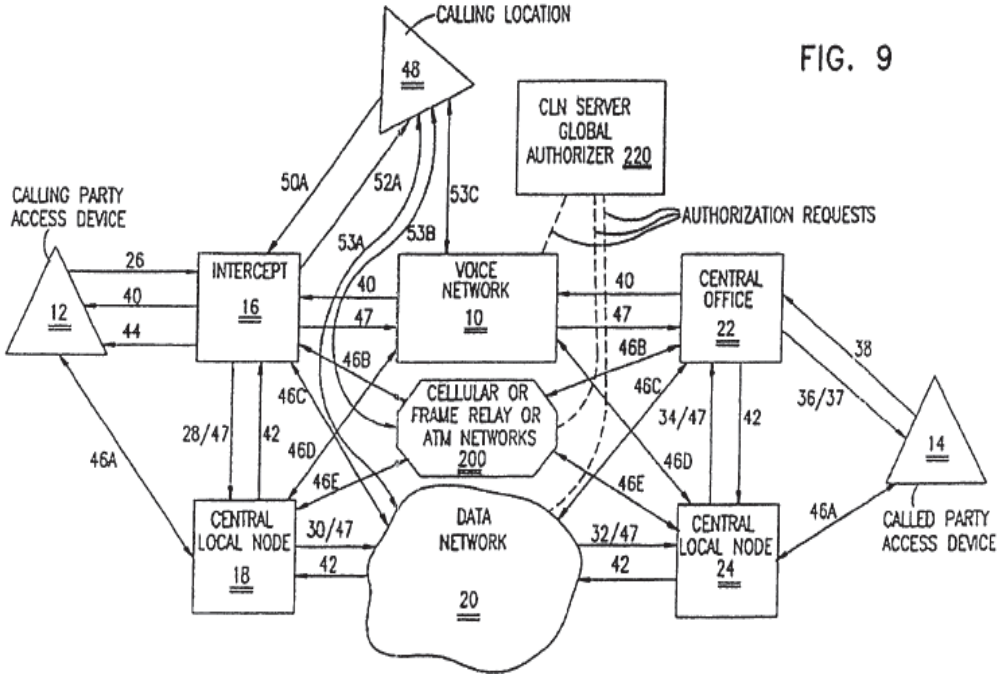

In Figure 9 of the ’879 Patent, a conceptual block diagram depicts the principles of operation of the method, as recited in independent claim 1, for transmitting voice communications between a calling party and a called party over a data network or another network. *Id*. at col. 4, ll. 3-4; col. 14, ll. 27-45. The block diagram of Figure 9 provides an overview of the transmission flow between a calling party and a called party. *See id*. at col. 6, ll. 36-56. The calling party at a calling location 48 transmits a call to a calling party access device 12 via an intercept 16 over link 50A. *Id.* at col. 14, l. 62-col. 15, l. 3. Intercept 16 may be part of a central local node 18. *Id.* at col. 15, ll. 11-12. Local node 18 receives transmissions from access device 12, converts those transmissions from a first format (e.g., a

telecommunication protocol) to "an internet protocol" for transmission over a data network 20, and sends the converted transmissions over the data network 20 in order to establish and transmit voice communication for a phone call with a called party access device 14. *Id.* at Fig. 9.

As an alternative to communicating through data network 20, additional two-way direct link connections 46A-E are depicted. *Id.* at col. 14, ll. 29-36. Through these connections, calling party access device 12 may route communications to called party access device 14 via either a communications network 10[1] or another network 200, such as a cellular, Asynchronous Transfer Mode (ATM), or frame relay network. *Id.*; *see also* Ex. 1001, col. 7, ll. 34-39.

Access device 14 may receive the voice communication via a central local node 24 and/or a central office 22. *Id.* at col. 15, ll. 4-8. Central local node 24 and central office 22 may be separate components. *Id.* at col. 15, ll. 12-14. The transmissions are converted from the internet protocol to another format suitable for reception by access device 14, such as the telecommunications protocol from which the transmissions were originally converted. *See id.* at col. 4, ll. 34-42.

[1] In Figure 9 of Ex. 1001, communications network 10 is described as "voice network 10."

C. Illustrative Claim

Challenged claim 1 is independent. Challenged claims 2-15 depend, directly or indirectly, from independent claim 1. Claim 1 is illustrative and is reproduced below:

> 1. A method for communication between two access devices via one or more networks, comprising the steps:
>
> receiving a transmission in a first format through a first communication network from a first access device, the first format comprising a telecommunication protocol for establishing and transmitting voice communication for a phone call in one of a digital telephone network, an analog telephone network, and a cellular network;
>
> performing a first conversion converting the transmission from the first format to a second format, the second format being an internet protocol;
>
> sending the converted transmission through a second communication network, the second communication network being a data network, for reception by a second access device; and
>
> performing a second conversion further converting the converted transmission from the second format to a further format suitable for the second access device, wherein the first access device and the second access device comprise telecommunication nodes, and said further format comprises said first format or another telecommunication protocol.

D. References Relied Upon

Petitioner relies upon the following references:

Gordon	US 5,608,786	Mar. 4, 1997 (filed Feb. 13, 1995)	(Ex. 1005)
Iwami	US 5,604,737	Feb. 18, 1997 (filed Dec. 13, 1994)	(Ex. 1006)
Kobayashi	US 5,337,352	Aug. 9, 1994	(Ex. 1007)
Chau	US 5,187,710	Feb. 16, 1993	(Ex. 1008)
Kammerl	US 5,051,983	Sep. 24, 1991	(Ex. 1013)

Ian Merritt, PROVIDING TELEPHONE LINE ACCESS TO A PACKET VOICE NETWORK at 1-15 (1983) (available at Defense Technical Information Center, Accession Number ADA 126270) (Ex. 1009);

S. Casner *et al*., *Wideband Communication*, 1982 ANNUAL TECHNICAL REPORT: RESEARCH PROGRAM IN COMPUTER TECHNOLOGY, March 1983 at 1-11, 85-97 (available at National Technical Information Service, Product Code ADAl27288) (Ex. 1010);

G.C. O'Leary *et al*., *A Modular Approach To Packet Voice Terminal Hardware Design*, 50 AFIPS CONFERENCE PROCEEDINGS, May 1981 at 183-188 (Ex. 1011);

Clifford J. Weinstein *et al*., *Experience With Speech Communication In Packet Networks*, 1 IEEE JOURNAL ON SELECTED AREAS IN COMMUNICATIONS, SPECIAL ISSUE ON PACKET SWITCHED VOICE AND DATA COMMUNICATIONS, 963-980 (1983) (Ex. 1012);

T. Ramteke, NETWORKS, 3, 4, 10, 58-60, 136-138, 245-247, 292-293, and 384 (1984) (Ex. 1014);

D. Cohen, RFC 741—Specifications for the Network Voice Protocol (NVP), Nov. 22, 1977. (Ex. 1015);

NSF Network News, *NSFNET Acceptable Use Policy*, National Science Foundation, Washington, D.C., 4 and 11, available at http://old.cni.org/docs/infopols/NSF.html (Ex. 1016);

S. Halabi, INTERNET ROUTING ARCHITECTURES, i-x, and 5-35 (2nd ed. 2000) (Ex. 1017);

NEWTON'S TELECOM DICTIONARY, 30, 211, 554, 643, 706, 827, 933, and 1014 (1994) (Ex. 1018); and

R.F. Rey, ENGINEERING AND OPERATIONS IN THE BELL SYSTEM, 52-56 (2nd ed. 1983) (Ex. 1019).

E. *The Asserted Grounds*

Petitioner alleges that claims 1-9 and 11-15 are anticipated under 35 U.S.C. § 102(e) by Gordon, and claims 1-15 are unpatentable under 35 U.S.C. § 103(a) based upon the listed references in various combinations. The specific grounds asserted by Petitioner are detailed in the table below:

Claims	Statutory Basis	Applied Reference(s)
1-9 and 11-15	35 U.S.C. § 102(e)	Gordon
6	35 U.S.C. § 103(a)	Gordon and Iwami
8, 9, 11, and 12	35 U.S.C. § 103(a)	Gordon and Kobayashi
10	35 U.S.C. § 103(a)	Gordon, Kobayashi, and Chau
1-8, 12, 14, and 15	35 U.S.C. § 103(a)	Merritt, Casner, O'Leary, and Weinstein
1-8, 12, and 15	35 U.S.C. § 103(a)	Merritt, Casner, O'Leary, Weinstein, and Iwami

8, 9, and 11-13	35 U.S.C. § 103(a)	Merritt, Casner, O'Leary, Weinstein, and Kobayashi
10	35 U.S.C. § 103(a)	Merritt, Casner, O'Leary, Weinstein, Kobayashi, and Chau
1-7 and 15	35 U.S.C. § 103(a)	Kammerl and Iwami
8, 9, and 11-13	35 U.S.C. § 103(a)	Kammerl, Iwami, and Kobayashi
10	35 U.S.C. § 103(a)	Kammerl, Iwami, Kobayashi, and Chau
14	35 U.S.C. § 103(a)	Kammerl, Iwami, and Gordon

II. CLAIM CONSTRUCTION

In an *inter partes* review, "[a] claim in an unexpired patent shall be given its broadest reasonable construction in light of the specification of the patent in which it appears." 37 C.F.R. § 42.100(b); *see also Office Patent Trial Practice Guide*, 77 Fed. Reg. 48756, 48766 (Aug. 14, 2012) (*Claim Construction*). Under the broadest reasonable construction standard, claim terms are given their ordinary and customary meaning as would be understood by one of ordinary skill in the art in the context of the entire disclosure. *CCS Fitness, Inc. v. Brunswick Corp.*, 288 F.3d 1359, 1366 (Fed. Cir. 2002). Nevertheless, a "claim term will not receive its ordinary meaning if the patentee acted as his own lexicographer and clearly set forth a definition of the disputed claim term in either the specification or

prosecution history." *Id*. Any special definition for a claim term must be set forth in the specification with reasonable clarity, deliberateness, and precision. *In re Paulsen*, 30 F.3d 1475, 1480 (Fed. Cir. 1994). In the absence of such a special definition or other consideration, "limitations are not to be read into the claims from the specification." *In re Van Geuns*, 988 F.2d 1181, 1184 (Fed. Cir. 1993).[2]

Petitioner and Patent Owner propose particular constructions for several claim terms. Patent Owner states that two of its proposed constructions differ materially from those proposed by Petitioner. *See, e.g.*, Prelim. Resp. 4. Patent Owner contends that, given the interpretation of certain claim terms, Gordon alone does not disclose each and every element of challenged claims 1-9 and 11-15 and that the asserted combinations of the applied references would not have taught or suggested all of the limitations of challenged claims 1-15. *Id*. at 1. In particular, Patent Owner contends that, in view of the interpretation of the claim terms "internet protocol" and "signaling message," the challenged claims are neither anticipated nor rendered unpatentable by the applied art. *Id.* To determine whether to institute an *inter partes* review, we construe the claim terms that Patent

---

[2] We note that the '879 Patent is set to expire on October 11, 2014. While the Board applies the broadest reasonable interpretation standard to the claims of an unexpired patent, the claim interpretation standard for an expired patent may be different. *See In re Rambus Inc.*, 694 F.3d 42, 46 (Fed. Cir. 2012) ("the Board's review of the claims of an expired patent is similar to that of a district court's review").

Owner relies upon to distinguish the challenged claims over the applied references and to which terms Petitioner ascribes alternative constructions.

A. An internet protocol

Claim 1 recites that the claimed method comprises the step of "performing a first conversion converting the transmission from the first format to a second format, *the second format being an internet protocol*." Claim 1 further recites that this second format is for sending the converted transmission through a second communication network (i.e., a data network). The Specification of the '879 Patent does not define expressly the term "internet protocol." Nevertheless, referring to Figure 2, the Specification states that:

> Both servers 60, 62 are networked *using transmission control protocol/Internet protocol TCP/IP, which is a set of protocols that link dissimilar computers across a variety of other networks and protocols as conventionally used on local area networks, minicomputers and mainframes*, or are networked with a router in the case of an ATM.

Ex. 1001, col. 7, ll. 45-50 (emphasis added). Thus, internet protocols, such as TCP/IP, link computers across a variety of networks and protocols and are an alternative to protocols used with an ATM network. The Specification further explains that:

> Other applications of the invention concern transmissions through conventional switched frame relay, conventional switched asynchronous transfer mode and other conventional

> data networks such as the Internet. Frame relay is an international standard for efficiently handling high-speed data over wide area networks that uses network bandwidth only when there is traffic to send. Asynchronous transfer mode allows users to combine voice, video and data on a single phone line and operates at up to Gigabyte-per-second speeds in which usable capacity is segmented into fixed-size cells each consisting of header and information fields allocated to services on demand. *The Internet network differs from frame relay switching and asynchronous transfer mode [ATM] by using internet protocols* such as transmission control protocol/Internet protocol (TCP/IP), which is a set of protocols developed by the Department of Defense to link dissimilar computers across a variety of other networks and protocols.

Ex. 1001, col. 7, ll. 23-39 (emphasis added). Moreover, as noted above, with respect to Figure 9, the Specification distinguishes between the conversion of telecommunication transmissions for transmission over a data network, such as data network 20, and for transmission over another network 200, such as a cellular, ATM, or frame relay network. *Id.* at col. 14, ll. 29-36.

Relying upon the Declaration of Dr. Vincent C. Jones (Ex. 1002), Petitioner proposes a broad construction of the term "internet protocol." Pet. 7-8 (citing Ex. 1002 ¶¶ 39-41). Specifically, Petitioner argues that the term "internet protocol" means "a set of rules, procedures or conventions relating to format and timing of data that allows communications between networks." *Id.* at 7 (quoting Ex. 1002 ¶ 41). Although Dr. Jones acknowledges that the Specification indicates that an Internet network "differs" from frame relay switching and ATM "by using internet protocols"

(Ex. 1002 ¶ 39 (quoting Ex. 1001, col. 7, ll. 34-39)), Dr. Jones relies instead upon the definitions of the words "internetworking" and "protocol" (*see id.* at ¶ 40 (citing Ex. 1014 and Ex. 1018)) in formulating Petitioner's construction of the term "internet protocol." We disagree with this construction, as it is overly broad and fails to take proper account of the Specification.

Patent Owner contends that, in view of the Specification, the term "internet protocol" must be construed to "satisfy three requirements: (1) that it be the type of protocol used on the Internet; (2) that it include TCP/IP; and (3) that it ***not*** be an ATM or a frame relay protocol." Prelim. Resp. 8-9. Patent Owner relies on extrinsic evidence (Prelim. Resp. 8-10 (citing Ex. 2002 and Ex. 2003)) to conclude that the term "datagram protocol" satisfies these requirements and that "the broadest reasonable interpretation of 'an internet protocol' in the context of the '879 patent is simply 'a datagram protocol'" (*id.* at 7-8). We note, however, that the term "datagram protocol" does not appear in the Specification, and we determine that it is unnecessary to introduce this new term in order to construe the term "internet protocol."

We are persuaded that based on the term's usage in the Specification, an "internet protocol" must satisfy the three requirements identified by Patent Owner. *Id*. at 8-9. Moreover, as Petitioner notes, the ordinary meaning of the term "protocol" is "a specific set of rules, procedures or conventions relating to format and timing of data transmission between two devices." Ex. 1002 ¶ 37 (quoting Ex. 1018, p. 827). Therefore, for

purposes of this decision, we construe the term "internet protocol" as a set of rules, instructions, or procedures relating to the format and timing of data transmissions between two devices over the Internet, such as TCP/IP. The term "internet protocol," as used in the claims of the '879 Patent, does *not* encompass ATM and frame relay protocols.

B. Signaling messages

Dependent claim 15 recites that "the transmission [of claim 1] comprises *signaling messages*" (emphasis added). Unlike the term "internet protocol," the term "signaling messages" does not appear in the Specification. Petitioner's declarant, Dr. Jones, proposes a construction of the term "signaling messages" based on the use of "signaling" in an extrinsic source (Ex. 1014, p. 58) and the separate definitions of the words "messages" (Ex. 1018, p. 643) and "signaling" (Ex. 1014, p. 58; Ex. 1018, p. 933) in a contemporary dictionary of telecommunications terms. Ex. 1002 ¶¶ 48-49. Petitioner argues that the term "signaling messages" means "control information exchanged between two points in a network to establish, maintain, and remove a connection," but Petitioner's construction does not distinguish between information controlling the establishment of the call and the speech content of the call. *See* Pet. 8 (citing Ex. 1002 ¶¶ 48-50).

Patent Owner contends that Petitioner's proposed construction of this term is overly broad because it fails to take into account the context in which

the term is used in claim 15 and its relation to the term "transmission" in independent claim 1. Prelim. Resp. 12-13. In particular, Patent Owner objects that Petitioner's construction "fails to limit the scope of a 'signaling message' to phone call connections." *Id.* at 13. Instead, Patent Owner contends that the broadest reasonable interpretation of the term "signaling message" is "control information exchanged between two points in a network to establish, maintain and remove a phone call *as distinguished from conversation information exchanged between a caller and a call recipient over an already established phone call*." *Id.* at 15 (emphasis added).

Patent Owner contends that the "transmission" of claim 1 comprises "signaling messages" and that, because the "transmission" is in a "first format comprising a telecommunication protocol for establishing and transmitting voice communication for a phone call," the "signaling messages" are related specifically to control of a phone call *connection*. *Id.* at 13. Consequently, Patent Owner contends that this construction is consistent with the Specification, which provides that "control information in the form of an inquiry of the availability status of the party to be called may be sent through different networks by routing it through a control location of the inventive system that converts it into compatible form." *Id.* (quoting Ex. 1001, col. 2, ll. 4-12).

Although both Petitioner and Patent Owner agree that the term "signaling messages" is construed properly to include "control information

exchanged between two points in a network to establish, maintain and remove" a phone call or a telephone connection (Pet. 8; Prelim. Resp. 13), Patent Owner attempts to distinguish these signals *in time* from speech or conversation information exchanged between the calling party and the called party. We discern no such distinction in the language of claim 1 or 15 or in the Specification. Claim 15 further limits the "transmission" of claim 1 to comprise "signaling messages," but claim 1 recites that the "transmission" is transmitted in a first format (e.g., telecommunications protocol) and that the transmission then is converted to a second format (e.g., internet protocol). Therefore, for purposes of this decision, we construe the term "signaling messages" to mean control information exchanged between two points in a network to establish, maintain, and remove a telephone connection.

C. Additional construed terms

Petitioner proposes constructions of the terms "access device," "telecommunication protocol," "telecommunication node," "selecting a route for the transmission based on at least one criteria defined by user preference," and "selecting a route for the transmission based on credit availability of a calling party." Pet. 6-7. Specifically, Petitioner argues that these terms "are to be given their broadest reasonable interpretation, as understood by one of ordinary skill in the art and consistent with the disclosure. 37 C.F.R. § 42.100(b)." *Id.* at 6. We determine that Petitioner's proposed constructions of these terms are consistent with their ordinary and customary meanings (*see* Ex. 1002 ¶¶ 35-38 and 42-47) and are not

inconsistent with the use of these terms in the Specification. Thus, we are persuaded by Petitioner's proposed construction of these terms, as follows:

Claim Term	Petitioner's Construction
access device	any device that allows entry to a circuit or other communications facility such as a voice or data network
telecommunication protocol	a specific set of rules, procedures or conventions relating to format and timing of a communication
telecommunication node	a point of connection in a telecommunication network
selecting a route for the transmission based on at least one criteria defined by user preference (Claim 8)	choosing a transmission route for a communication based on a user's criteria
wherein the at least one criteria [of claim 8] comprises credit availability of a calling party (Claim 10)	choosing whether to transmit or disconnect a call based on a credit availability

Pet. 7-8. Moreover, Patent Owner does not propose alternative constructions for these terms. *See* Prelim. Resp. 4 ("This section identifies selected ones of those overly broad definitions. . . . Patent Owner reserves the right to contest any or all of the claim term proposals set forth in the Petition, whether or not they are specifically addressed below."). Therefore, for purposes of this decision, we construe these additional claim terms in the manner proposed by Petitioner.

III. DECISION TO INSTITUTE

For the reasons described below, we institute an *inter partes* review on the grounds that each of claims 1-15 is unpatentable over the combination of Kammerl and Iwami, alone or in further combination with Kobayashi, Chau, or Gordon.

IV. GROUNDS FOR REVIEW

A. Priority Date for the '879 Patent Claims

The '879 Patent, issued from U.S. Patent Application No. 11/895,460 filed August 24, 2007, is a continuation of a series of three applications, the last of which is a continuation-in-part of U.S. Patent Application No. 08/320,269 (the "'269 Application"), filed October 11, 1994. Ex. 1001, col. 1, ll. 7-14. Gordon and Iwami have U.S. filing dates of February 13, 1995, and December 13, 1994, respectively. Ex. 1005 (Item [22] on face page); Ex. 1006 (Item [22] on face page). Initially, we note that Petitioner only may request *inter partes* review based on statutory grounds under 35 U.S.C. §§ 102 or 103 based on patents or printed publications. 37 C.F.R. § 42.104(b)(2). Petitioner must identify the references relied upon in support of its challenge to the claims of the '879 Patent. *Id.*

Petitioner argues that the '879 Patent is not entitled to the benefit of the earliest date, October 11, 1994, to which the applicant claimed priority under 35 U.S.C. § 120. Pet. 10-11. In particular, Petitioner notes that Dr. Jones opined that "the '269 application would not have conveyed to a

person of ordinary skill in the art that the applicant was in possession of *the subject matter claimed* in the '879 patent at the time that the '269 application was filed." *Id.* at 10 (emphasis added; citing Ex. 1002 ¶¶ 51-58). Moreover, Petitioner argues that the '269 Application does not mention the term "internet protocol" and that, based on Dr. Jones's review, the '269 Application does not provide support for the use of an "internet protocol." *Id.*

Although Patent Owner notes that the '879 Patent claims an earliest priority date of October 11, 1994, Patent Owner does not rely on this priority date to distinguish the cited references, and, in particular, to distinguish Gordon and Iwami, over the challenged claims. Prelim Resp. 2 n.1. Rather, Patent Owner states that it "reserves the right to present evidence and argument in support of the October 11, 1994, priority claim." *Id.*

We are not persuaded that, because the term "internet protocol" does not appear in the '269 Application, the '269 Application lacks support for that term. *See* Ex. 1002 ¶ 52. Moreover, because we do not adopt Petitioner's construction of the term "internet protocol," Dr. Jones's opinion as to whether a person skilled in the relevant art would have understood the applicant to have been "in possession of any of the claims of the '879 patent when the '269 application was filed" also is not persuasive. *See id.* at ¶ 58.

Nevertheless, Dr. Jones correctly observes that Figures 2-6, 7A-7G, 8, and 9 of the '879 Patent, and their corresponding descriptions in the '879 Patent, are not included in the '269 Application. *Id.* at ¶ 52. Further, Patent

Owner indicates that Figure 9 of the '879 Patent provides an overview of the claimed invention. Prelim. Resp. 3. Moreover, figures corresponding to Figures 2-6, 7A-7G, 8, and 9 of the '879 Patent first appear in U.S. Patent Application No. 08/727,681, now issued as Patent No. US 6,188,756 B1, *filed October 8, 1996*. Ex. 3001. Based on the current record, and in view of Patent Owner's failure to contest Petitioner's challenge to the priority date of the'879 Patent, we determine that Petitioner has demonstrated a reasonable likelihood that the claims of the '879 Patent are not entitled to the October 11, 1994, filing date of the '269 Application. Therefore, for purposes of this decision, we ascribe an effective filing date of October 8, 1996, for each challenged claim. Consequently, Petitioner has demonstrated a reasonable likelihood that Gordon and Iwami are prior art references under 35 U.S.C.
§ 102(e), and we decide whether to institute an *inter partes* review based on consideration of all of the cited references.

B. Unpatentability Due To Obviousness

1. Kammerl and Iwami

Petitioner argues that Kammerl discloses all of the limitations of independent claim 1, except for "the second format being an internet protocol." Pet. 47-52. Petitioner argues, however, that Iwami clearly teaches a second format that is an internet protocol. *Id.* at 49. Petitioner argues that, referring to Iwami's Figure 1, "Iwami discloses using the Internet Protocol for establishing and transmitting voice communications for

a phone call. In particular, Iwami's system allows a telephone connected through a public telephone network to place a call across a packet-switched network to a terminal connected through a Local Area Network (LAN)." *Id*. at 41 (citing Ex. 1006, col. 1, ll. 55-60, col. 11, ll. 19-25, col. 12, ll. 52-59).

As Iwami further explains:

> *the LAN communication controller 14 shown in FIG. 2 may be adapted to simultaneously support a plurality of communication protocols, for example, TCP/IP protocol and UDP/IP protocol*, such that the voice communication packet is transmitted utilizing the UDP/IP protocol . . . and *control information such as the voice communication request command and voice communication end notice command* shown in FIG. 5 *and the connected terminal determination result notice command* shown in FIG. 19 *are transmitted utilizing the TCP/IP protocol.* The appropriate use of different protocols in this way will . . . reliably control the start, termination, and so on of the voice communication.

Ex. 1006, col. 17, ll. 44-58 (emphases added). Petitioner argues that a person of ordinary skill in the relevant art:

> would have understood that Internet Protocol as taught by Iwami could be used over the ATM network taught by Kammerl. Doing so would have allowed Kammerl's voice communications to be transmitted on networks other than ATM networks. This is the reason that internetworking or internet protocols such as the Internet Protocol were developed—to allow internetworking of diverse networks.

Pet. 49-50 (citing Ex. 1002 ¶ 227) (citations omitted).

Finally, referring to Figure 2, reproduced below, Kammerl depicts a second example of a broadband communications network, such that a number of network transfers are provided in different transmission directions. Ex. 1013, col. 5, ll. 33-36.

FIG 2

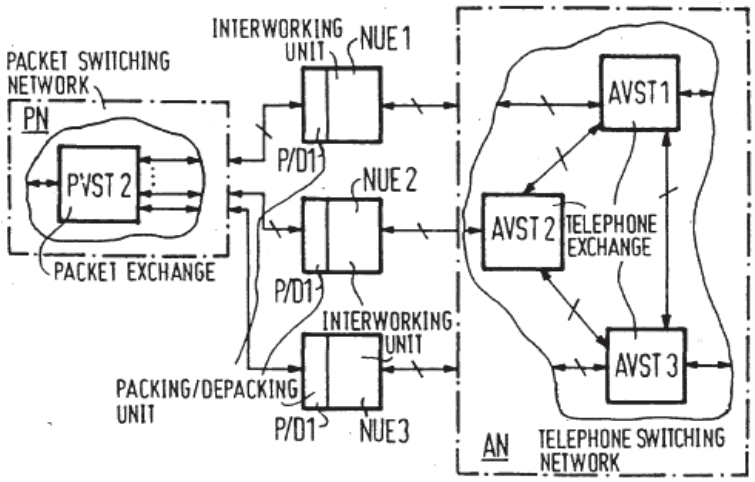

As depicted in Figure 2 above, three interworking units (NUE1, NUE2, and NUE3) are connected to a packet switching network PN and to a telephone switching network AN. *Id.* at ll. 36-39. Each of the three interworking units is connected to one of three different telephone exchanges (AVST1, AVST2, and AVST3) by way of a trunk group for each. *Id.* at ll. 39-42. Moreover, Kammerl teaches that the broadband communications network depicted in Figure 2 may be modified, such that

packet switching network PN is connected as a transit network by way of interworking units between two telephone switching networks. *Id.* at ll. 57-61. Thus, Petitioner argues that Kammerl teaches the "sending" and "performing" steps of independent claim 1. Pet. 50-52.

Patent Owner objects to Petitioner's proposed combination of Kammerl and Iwami for two reasons. First, Patent Owner contends that Kammerl and Iwami fail to teach or suggest all of the limitations of claim 1. Prelim. Resp. 52-54. Initially, Patent Owner contends that Iwami does not teach or suggest "performing a second conversion further converting the converted transmission from the second format to a further format suitable for the second access device," as recited in claim 1. *Id.* at 53. Instead, Patent Owner contends that, at most, Iwami's communication server performs "a conversion from a first to a second format, but does not perform a second conversion to a further format." *Id.* (citing Ex. 1006, col. 3, ll. 4-10). We note, however, that Petitioner relies on Kammerl, *not* Iwami, as teaching the step of "performing a second conversion further converting the converted transmission from the second format to a further format suitable for the second access device." Pet. 51-52.

Patent Owner further contends that, assuming *arguendo* that Kammerl teaches the second conversion, Kammerl's second conversion would be performed "in the context of an ATM network." Prelim. Resp. 53. As noted above, however, Petitioner relies on Iwami, *not* Kammerl, to teach or suggest the "internet protocol" recited in claim 1. Pet. 49-50. Thus, we are

not persuaded that Kammerl and Iwami fail to teach all of the limitations of challenged claim 1.

Second, Patent Owner contends that a person of ordinary skill in the relevant art would not have had a reason to combine the teachings of these references in the manner proposed by Petitioner. Prelim. Resp. 54-57. In particular, Patent Owner contends that a person of ordinary skill in the relevant art would not have modified the teachings of Kammerl in view of the teachings of Iwami to teach conversion to an internet protocol "because: (i) Kammerl teaches away from such a modification; (ii) the modification renders Kammerl's system inoperable for its intended purpose; and (iii) the Petitioner's stated reason in support of this proposed modification is nonsensical." *Id.* at 55.

A reference may be said to teach away when a person of ordinary skill, upon reading the reference, would be discouraged from following the path set out in the reference, or would be led in a direction divergent from the path that was taken by the applicant. *In re Gurley*, 27 F.3d 551, 53 (Fed. Cir. 1994). "The fact that the motivating benefit comes at the expense of another benefit, however, should not nullify its use as a basis to modify the disclosure of one reference with the teachings of another. Instead, the benefits, both lost and gained, should be weighed against one another." *Winner Int'l Royalty Corp. v. Wang*, 202 F.3d 1340, 1349 n.8 (Fed. Cir. 2000); *see DePuy Spine, Inc. v. Medtronic Sofamor Danek, Inc.*, 567 F.3d

1314, 1327 (Fed. Cir. 2009) ("A reference does not teach away . . . if it merely expresses a general preference for an alternative invention.").

Kammerl states that "[t]he problem which the present invention overcomes is [to] reduce the lag times due to the packet switching network in transmission of speech signals at least partially in a packet switching network." Ex. 1013, col. 1, ll. 57-60. Patent Owner contends that modifying Kammerl's system to include using Iwami's TCP/IP protocol would increase, not reduce, lag times. Prelim. Resp. 55. Patent Owner, however, does not provide sufficient and credible evidence that packet-switching networks, such as those employing TCP/IP, must incur increased lag times when compared to ATM networks. *See id.* Further, we note that Kammerl describes using an ATM network with respect to a preferred embodiment of the invention. Ex. 1013, col. 3, ll. 35-41. Kammerl's independent claims, however, are not limited to ATM networks, and we conclude that Kammerl's disclosure is broader than the general preference expressed in the preferred embodiment. Thus, based on the current record, we are not persuaded that Kammerl teaches away from its combination with Iwami.

Similarly, Patent Owner does not provide sufficient and credible evidence that the modification of Kammerl to include the use of an internet protocol, rather than ATM, would render Kammerl's invention unsuitable for its intended purpose. Regarding the use of TPC/IP protocols, Iwami states that "[t]he appropriate use of different protocols in this way will

prevent a delay in the arrival of the voice communication packets and reliably control the start, termination, and so on of the voice communication." Ex. 1006, col. 17, ll. 55-58.

Finally, Patent Owner contends that Petitioner's stated reason for combining the teachings of Kammerl and Iwami is "nonsensical." Prelim. Resp. 56. As noted above, Petitioner argues that a person of ordinary skill in the relevant art:

> would have understood *that Internet Protocol as taught by Iwami could be used over the ATM network taught by Kammerl*. . . . Doing so would have allowed Kammerl's voice communications *to be transmitted on networks other than ATM networks*. . . . This is the reason that internetworking or internet protocols such as the Internet Protocol were developed to allow internetworking of diverse networks.

Pet. 49 (emphases added). Patent Owner contends that "sending the voice signals as IP packets over the ATM network does not perform any type of internetworking function, as the IP packets are merely transported intact across the ATM link and extracted on the other side." Prelim. Resp. 56-57. Based on the current record, however, we see no reason why Internet Protocol packets, as taught by Iwami, could not be transmitted over the ATM network taught by Kammerl, and we are persuaded by the analysis set forth by Petitioner and Dr. Jones. *See* Pet. 49 (citing Ex. 1002, ¶ 227). Thus, we are not persuaded that Petitioner's reason for combining Kammerl and Iwami is "nonsensical."

In view of the foregoing discussion, we are persuaded that Petitioner demonstrates a reasonable likelihood of prevailing on its challenge to the patentability of independent claim 1. We also are persuaded that Petitioner demonstrates a reasonable likelihood of prevailing on its challenge to the patentability of claims 2-7 and 15 of the '879 Patent as unpatentable over Kammerl and Iwami. Pet. 52-55. Patent Owner in its preliminary response does not argue these claims separately, but instead relies upon its arguments regarding the base claim, claim 1, to distinguish over the combined references.

2. Kammerl, Iwami, and Kobayashi

Petitioner argues that Kammerl, Iwami, and Kobayashi teach all of the limitations of dependent claims 8, 9, and 11-13. Pet. 56-58. In particular, claim 8 recites that the method of claim 1 "further compris[es] the step of selecting a route for the transmission based on at least one criteria defined by user preference." Each of claims 9 and 11 depends directly from claim 8 and recites that the at least one criteria comprises "a specified level of transmission quality" and the "cost of routing," respectively.

With respect to claims 8, 9, and 11, Petitioner argues that Kammerl is directed to providing voice-over-packet networks in order to improve the "quality of speech signal transmissions." Pet. 56 (quoting Ex. 1013, col. 1, ll. 34-35). Further, Petitioner argues that "Kobayashi teaches a method of improving transmission *quality by routing* on the basis of the recorded preferences of users of the network." *Id.* (emphasis added; citing Ex. 1007,

col. 3, ll. 20-25 ("conditions dependent on the respective tenants")). Thus, Petitioner concludes that Kammerl, Iwami, and Kobayashi teach all of the limitations of each of claims 8, 9, and 11.

Claim 12 recites that, in the method of claim 8, "the transmission comprises execution of a call setup procedure." Petitioner argues that Kammerl teaches executing a call setup procedure "that involve[s] inserting signaling procedure signals from subscriber's sets into packets and relaying them between the subscriber's sets." Pet. 57-58 (citing Ex. 1013, col. 3, ll. 41-55). Thus, Petitioner argues that Kammerl, Iwami, and Kobayashi teach all of the limitations of each of claims 8 and 12.

Claim 13 recites that the method of claim 1 "further compris[es] the step of storing at least one of subscriber information, rate schedules, and call details." Petitioner argues that Kobayashi teaches that "the controller CONT determines the optimal route (least-cost route) by referring to a table stored in the memory MEM." Pet. 58 (quoting Ex. 1007, col. 2, ll. 24-26). Petitioner further argues that a person of ordinary skill in the relevant art would have had reason to combine the teachings of Kobayashi with those of Kammerl and Iwami, so that users may be billed for their communication usage, based on predictable methodologies, such as those relying on stored subscriber information. *Id.* Thus, Petitioner argues that Kammerl, Iwami, and Kobayashi teach all of the limitations of claim 13.

Patent Owner does not dispute Petitioner's mapping of the disclosure of Kobayashi or Kammerl on the limitations of claims 8, 9, 11, and 12, or

Petitioner's mapping of the disclosure of Kobayashi on the limitations of claim 13. Instead, Patent Owner contends that Petitioner fails to demonstrate (1) that Kammerl and Iwami teach all of the limitations of independent claim 1 and (2) that a person of ordinary skill in the art would have had reason to combine the teachings of Kammerl and Iwami to achieve the invention recited in claim 1. Prelim. Resp. 52-57. We are not persuaded by Patent Owner's contentions, for the reasons set forth above. Petitioner demonstrates a reasonable likelihood of prevailing on its challenge to the patentability of claims 8, 9, and 11-13 of the '879 Patent as unpatentable over Kammerl, Iwami, and Kobayashi.

3. Kammerl, Iwami, Kobayashi, and Chau

Petitioner argues that Kammerl, Iwami, Kobayashi, and Chau teach all of the limitations of dependent claim 10. Pet. 58. Claim 10 depends directly from claim 8 and recites that the at least one criteria comprises "credit availability of a calling party." In particular, Petitioner argues that Chau teaches performing a credit check on callers. *Id.* Specifically, Chau teaches that "[t]he sponsor collects the caller response and may do a credit check on a caller using the provided information. If the credit check indicates that the call should not be accepted, then a suitable message is outputted to the caller and the call is terminated." Ex. 1008, col. 7, ll. 54-59. Moreover, Petitioner argues that modifying the teachings of Kammerl, Iwami, and Kobayashi to conduct a credit check on the caller *as at least one criteria*, as taught by Chau, would involve no more than applying known techniques to achieve a

predictable result. Pet. 58; *see KSR Int'l Co. v. Teleflex Inc.*, 550 U.S. 398, 416 (2007) ("The Court recognized that when a patent claims a structure already known in the prior art that is altered by the mere substitution of one element for another known in the field, the combination must do more than yield a predictable result.").

Patent Owner does not dispute Petitioner's mapping of the disclosure of Chau on the limitations of claim 10. Instead, Patent Owner contends that Petitioner fails to demonstrate (1) that Kammerl and Iwami teach all of the limitations of independent claim 1 and (2) that a person of ordinary skill in the art would have had reason to combine the teachings of Kammerl and Iwami to achieve the invention recited in claim 1. Prelim. Resp. 52-57. As noted above, we are not persuaded by Patent Owner's contentions. Consequently, we are persuaded that Petitioner demonstrates a reasonable likelihood of prevailing on its challenge to the patentability of claim 10 of the '879 Patent as unpatentable over Kammerl, Iwami, Kobayashi, and Chau.

4. Kammerl, Iwami, and Gordon

Petitioner argues that Kammerl, Iwami, and Gordon teach all of the limitations of dependent claim 14. Pet. 58-59. Claim 14 depends directly from independent claim 1 and recites that, in the method of claim 1, "the transmission is related to a fax transmission." Petitioner argues that "Gordon teaches sending a fax transmission over a data network." *Id.* In particular, Gordon teaches that "a facsimile transmission addressed to a

particular address in Japan can effectively use the UniPost access system." Ex. 1005, col. 8, ll. 1-3; *see also* Ex. 1005, col. 8, 11-18 (using "the Internet data transmission system 4 to transfer the facsimile to the Tokyo UniPost Access Node 6"). Petitioner argues that modifying the teachings of Kammerl and Iwami to send a facsimile transmission as taught by Gordon, instead of a voice transmission, would involve no more than applying known techniques to achieve a predictable result. Pet. 59; *see KSR*, 550 U.S. at 416.

Patent Owner does not dispute Petitioner's mapping of the disclosure of Gordon on the limitations of claim 14. Instead, Patent Owner contends that Petitioner fails to demonstrate (1) that Kammerl and Iwami teach all of the limitations of independent claim 1 and (2) that a person of ordinary skill in the art would have had reason to combine the teachings of Kammerl and Iwami to achieve the invention recited in claim 1. Prelim. Resp. 52-57. As noted above, we are not persuaded by Patent Owner's contentions. Consequently, we are persuaded that Petitioner demonstrates a reasonable likelihood of prevailing on its challenge to the patentability of claim 14 of the '879 Patent as unpatentable over Kammerl, Iwami, and Gordon.

C. Remaining Asserted Grounds of Unpatentability

Petitioner asserts additional grounds of unpatentability with respect to claims 1-15, as listed in Section I.E above. Those additional grounds are denied as redundant in light of the determination that there is a reasonable likelihood that the challenged claims are unpatentable based on the grounds

of unpatentability, discussed above, on which we institute an *inter partes* review. *See* 37 C.F.R. § 42.108(a).

V. CONCLUSION

For the foregoing reasons, we determine that Petitioner demonstrates a reasonable likelihood of prevailing on its challenge to the patentability of claims 1-15 of the '879 Patent.

VI. ORDER

For the reasons given, it is

ORDERED that the petition is *granted* as to claims 1-15 of the '879 Patent and that, pursuant to 35 U.S.C. § 314, an *inter partes* review of the '879 Patent is hereby instituted for the following grounds:

Claims 1-7 and 15 under 35 U.S.C. § 103(a) as unpatentable over Kammerl and Iwami;

Claims 8, 9, and 11-13 under 35 U.S.C. § 103(a) as unpatentable over Kammerl, Iwami, and Kobayashi;

Claim 10 under 35 U.S.C. § 103(a) as unpatentable over Kammerl, Iwami, Kobayashi, and Chau; and

Claim 14 under 35 U.S.C. § 103(a) as unpatentable over Kammerl, Iwami, and Gordon.

FURTHER ORDERED that the petition for *inter partes* review based on each of the other asserted grounds is *denied*.

FURTHER ORDERED that pursuant to 35 U.S.C. § 314(a), an *inter partes* review of the '879 Patent is hereby instituted commencing on the entry date of this Order, and, pursuant to 35 U.S.C. § 314(c) and 37 C.F.R. § 42.4, notice is hereby given of the institution of a trial.

FURTHER ORDERED that an initial conference call with the Board is scheduled for 2:00 PM EST on December 2, 2013. The parties are directed to the *Office Trial Practice Guide*, 77 Fed. Reg. at 48765-66, for guidance in preparing for the initial conference call, and should come prepared to discuss any proposed changes to the Scheduling Order entered herewith and any motions the parties anticipate filing during the trial.

PETITIONER:

Michael B. Ray
Jon E. Wright
Sterne, Kessler, Goldstein & Fox, P.L.L.C.
mray-ptab@skgf.com
jwright-ptab@skgf.com

PATENT OWNER:

John C. Phillips
W. Karl Renner
Roberto J. Devoto
Fish & Richardson P.C.
Phillips@fr.com;
axf@fr.com;
Devoto@fr.com
IPR38460-0002IP1@fr.com

EXHIBIT E

IN THE UNITED STATES DISTRICT COURT
FOR THE DISTRICT OF DELAWARE

ALLERGAN, INC., and ALLERGAN SALES, LLC, Plaintiffs, v. ALCON INC., ALCON LABORATORIES, INC., and ALCON RESEARCH, LTD., Defendants.	)	Civil Action No. 04-968 (GMS)

ORDER

Presently before the court is the defendants' motion to amend its answer to the plaintiffs' complaint. (D.I. 107.) This motion to amend was filed on July 25, 2005, about a week before the close of fact discovery and nearly eight months after the deadline for amended pleadings. The defendant's proposed amended answer contains approximately fourteen pages of new factual allegations in support of four new affirmative defenses and counterclaims: (1) unenforceability of U.S. Patent No. 6,641,834 ("the '834 patent") for inequitable conduct; (2) unenforceability of U.S. Patent No. 6,673,337 ("the '337 patent") for inequitable conduct; (3) unenforceability of the '834 patent and/or the '337 patent for unclean hands; and (4) invalidity of the '834 patent for the misjoinder of an inventor.

The Federal Rules of Civil Procedure provide that "[a] schedule shall not be modified except upon a showing of good cause . . . ." Fed. R. Civ. P. 16(b). A showing of "good cause" requires the movant to demonstrate that a deadline "cannot reasonably be met despite the diligence of the party seeking the extension." Rule 16 advisory committee notes (1983 Amend.). Here, the defendants argue that they could not have pleaded these defenses and counterclaims until after the deposition

of the first-named inventor of the patents, and the deposition of the plaintiffs' former in-house counsel because those depositions revealed previously-unknown information. If the defendants are correct, it would seem that their motion should be granted. However, the defendants' opening brief points to no specific deposition testimony to back their argument. In fact, the defendants waited to submit any exhibits (other than the proposed amended answer) until they filed their reply brief – the very definition of sandbagging. And, those exhibits, which are prefaced by seven-page declaration that can only be described as an additional argumentative brief, do not support the defendants' contention that the depositions were a necessary predicate to their amendment. Instead, the exhibits merely demonstrate alleged stonewalling by the plaintiffs – acts which are irrelevant to this motion if the depositions yielded no fruit. From the defendants' submissions, the court is unable to discern exactly what was discovered during the depositions. All the defendants offer are vague representations. (See, e.g., D.I. 123 at 9.) Moreover, the heart of the defendants' amendments, found at paragraphs 70 through 72 of the proposed amended answer, appear to mention nothing material regarding the deposition testimony of either the inventor or the attorney. To the contrary, the defendants cite new drug applications and publicly-available prior art to support their claims that the plaintiffs were not forthright with the patent office. Therefore, the court holds that the defendants have not shown good cause in accordance with Rule 16(b).

IT IS HEREBY ORDERED THAT:

The defendants' motion to amend (D.I. 107) be DENIED.

Dated: January 17, 2006

/s/ Gregory M. Sleet
UNITED STATES DISTRICT JUDGE

CERTIFICATE OF SERVICE

I, Jeffrey T. Castellano, hereby certify that on December 19, 2013, this document was served on the persons listed below in the manner indicated:

BY EMAIL:

Richard K. Herrmann
Kenneth L. Dorsney
Mary Matterer
MORRIS JAMES LLP
500 Delaware Ave., Suite 1500
P.O. Box 2306
Wilmington, DE 19899-2306
rherrmann@morrisjames.com
mmatterer@morrisjames.com

Karen H. Bromberg
Francisco A. Villegas
Damir Cefo
Maria Granovsky
Joyce E. Kung
COHEN & GRESSER LLP
800 Third Avenue
New York, NY 10022
kbromberg@cohengresser.com
fvillegas@cohengresser.com
dcefo@cohengresser.com
mgranovsky@cohengresser.com
jkung@cohengresser.com

SHAW KELLER LLP

/s/ Jeffrey T. Castellano
Jeffrey T. Castellano (No. 4837)
300 Delaware Avenue, Suite 1120
Wilmington, DE 19801
(302) 298-0700
jcastellano@shawkeller.com
Attorney for Defendant
Level 3 Communications LLC