EXHIBIT A

US005988078A

United States Patent [19]

Levine

[11] Patent Number: 5,988,078

[45] Date of Patent: Nov. 23, 1999

[54] **METHOD AND APPARATUS FOR RECEIVING CUSTOMIZED TELEVISION PROGRAMMING INFORMATION BY TRANSMITTING GEOGRAPHIC LOCATION TO A SERVICE PROVIDER THROUGH A WIDE-AREA NETWORK**

[75] Inventor: **Michael R. Levine**, Boca Raton, Fla.

[73] Assignee: **Gemstar Development Corp.**, Pasadena, Calif.

[21] Appl. No.: **08/947,950**

[22] Filed: **Oct. 9, 1997**

Related U.S. Application Data

[63] Continuation of application No. 08/287,343, Aug. 8, 1994, Pat. No. 5,692,214, which is a continuation-in-part of application No. 07/848,338, Mar. 9, 1992, abandoned, which is a continuation-in-part of application No. 07/802,249, Dec. 4, 1991, abandoned.

[51] **Int. Cl.**[6] **G06F 13/14**; H04N 7/03

[52] **U.S. Cl.** **110/8**; 348/13; 348/460; 709/218

[58] **Field of Search** 395/200; 348/13, 348/460; 709/218; 710/8

[56] **References Cited**

U.S. PATENT DOCUMENTS

4,521,914	6/1985	Petrovic	455/158.5
4,630,108	12/1986	Gomersall	348/13
4,734,765	3/1988	Okada et al.	348/107
4,751,578	6/1988	Reiter et al.	348/564
5,223,924	6/1993	Strubbe	358/86
5,291,554	3/1994	Morales	380/5
5,382,983	1/1995	Kwoh et al.	348/716
5,404,505	4/1995	Levinson	707/10
5,485,219	1/1996	Woo	348/460
5,534,911	7/1996	Levitan	348/1
5,619,274	4/1997	Roop et al.	348/461
5,663,757	9/1997	Morales	348/13
5,703,795	12/1997	Mankovitz	345/327
5,781,246	7/1998	Alten et al.	348/569

Primary Examiner—Thomas C. Lee
Assistant Examiner—Albert Wang
Attorney, Agent, or Firm—Gifford, Krass, Groh, Sprinkle, Anderson & Citkowski, PC

[57] **ABSTRACT**

A personal computer is used to assist in the selection of television programs to be recorded at future times and to control a video tape recorder to implement the selected recordings. An application program allows the computer to receive data representing a schedule of future programs. The operator can perform data base operations on the data to obtain listings of programs of particular interest. A program to be recorded is selected by moving a cursor into position with the display of the program listing on the computer. An output device generates infrared signals to control the video tape recorder and a cable box to tune and record a selected program.

10 Claims, 3 Drawing Sheets

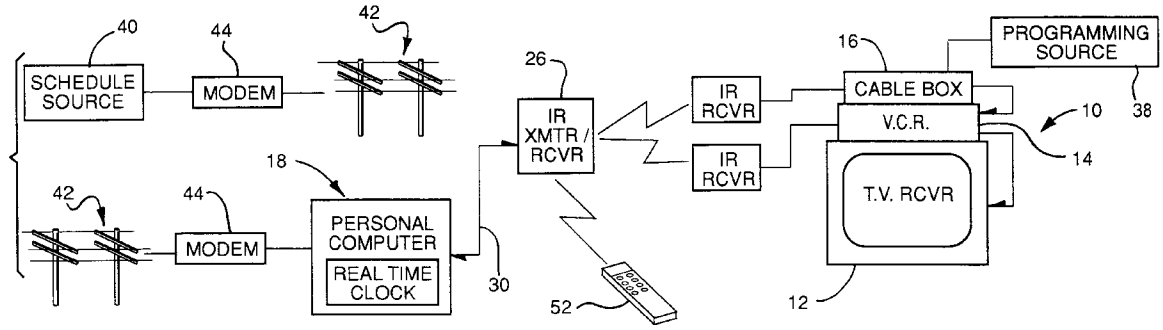

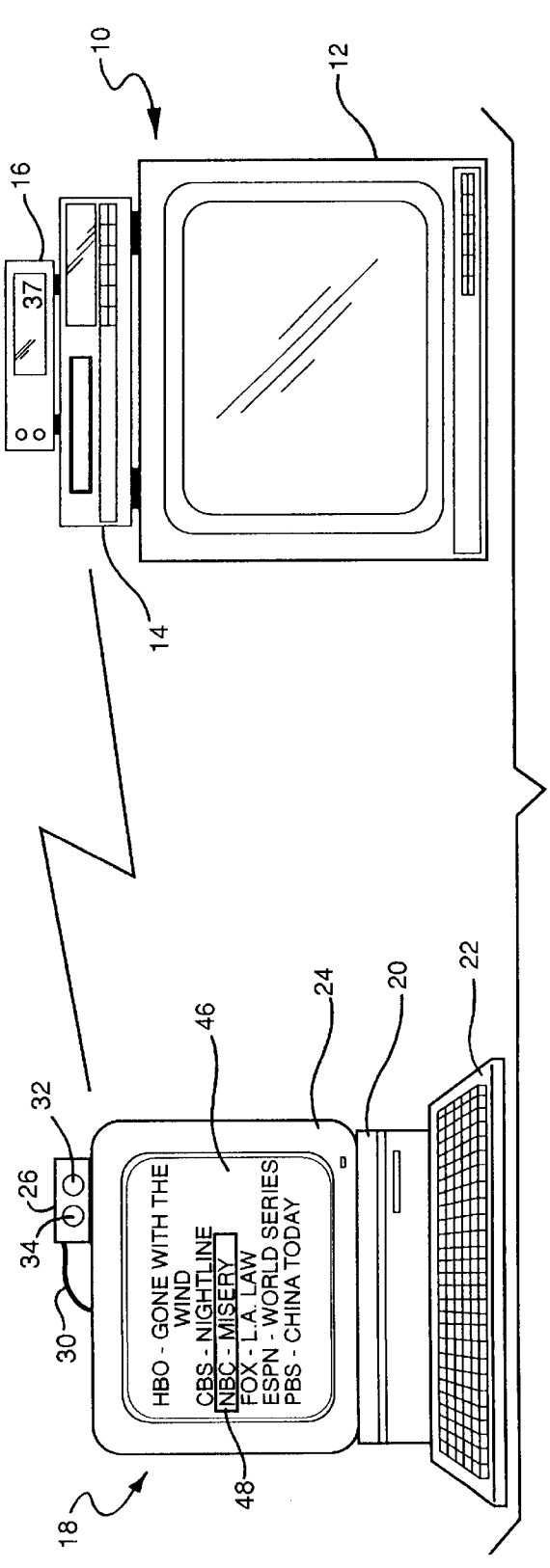
10
12
16
37
14
18
HBO - GONE WITH THE WIND
CBS - NIGHTLINE
NBC - MISERY
FOX - L.A. LAW
ESPN - WORLD SERIES
PBS - CHINA TODAY
46
24
20
22
32
26
34
30
48

FIG - 1

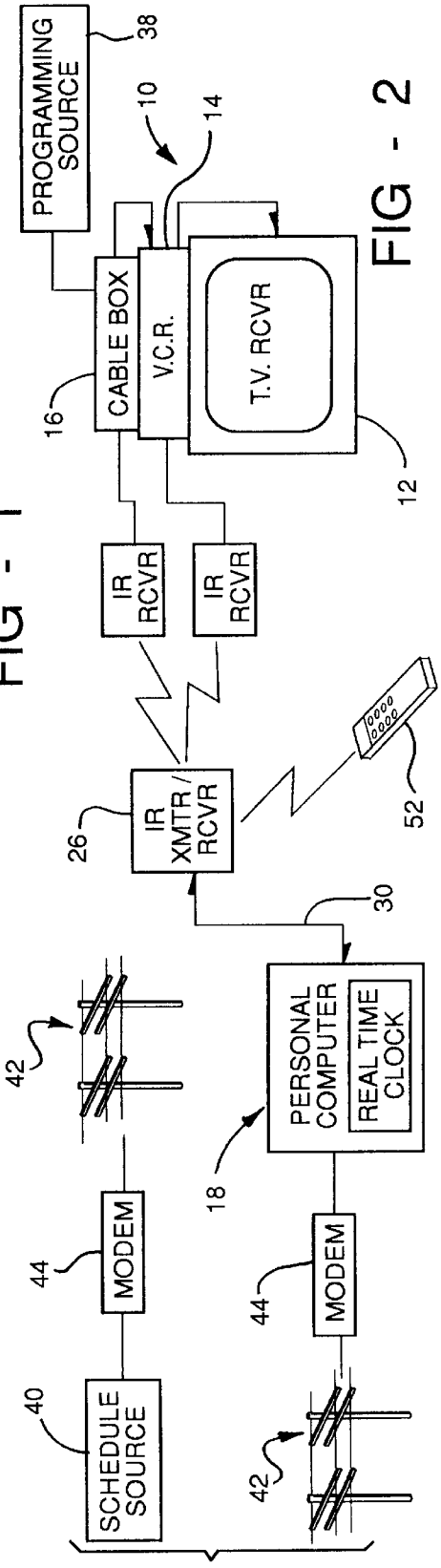
PROGRAMMING SOURCE
38
10
14
CABLE BOX
V.C.R.
T.V. RCVR
16
12
IR RCVR
IR RCVR
IR XMTR / RCVR
26
52
30
PERSONAL COMPUTER
REAL TIME CLOCK
18
42
MODEM
44
SCHEDULE SOURCE
40

FIG - 2

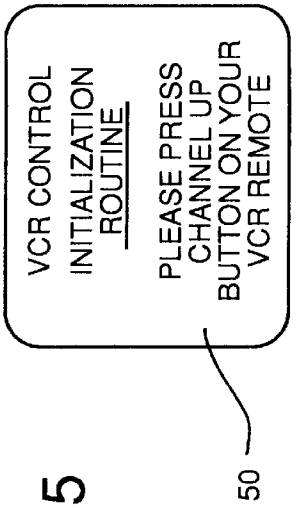

FIG - 5

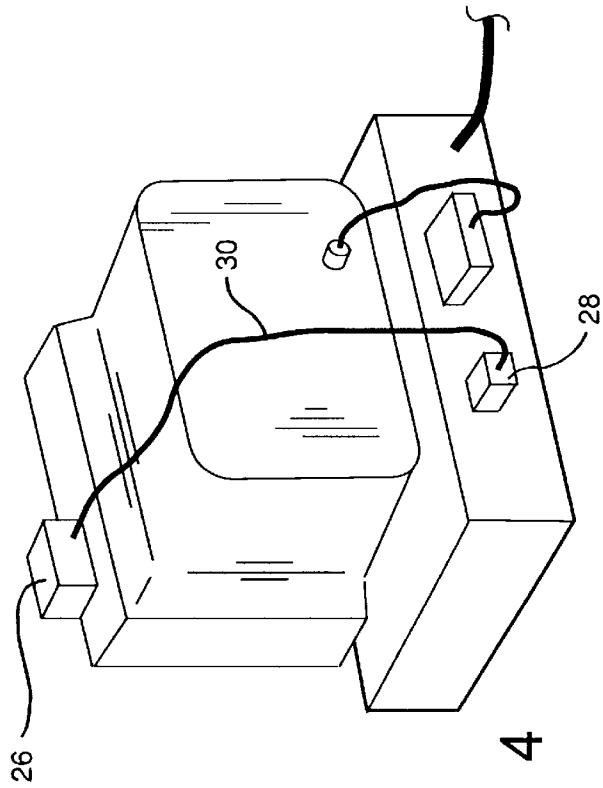

FIG - 4

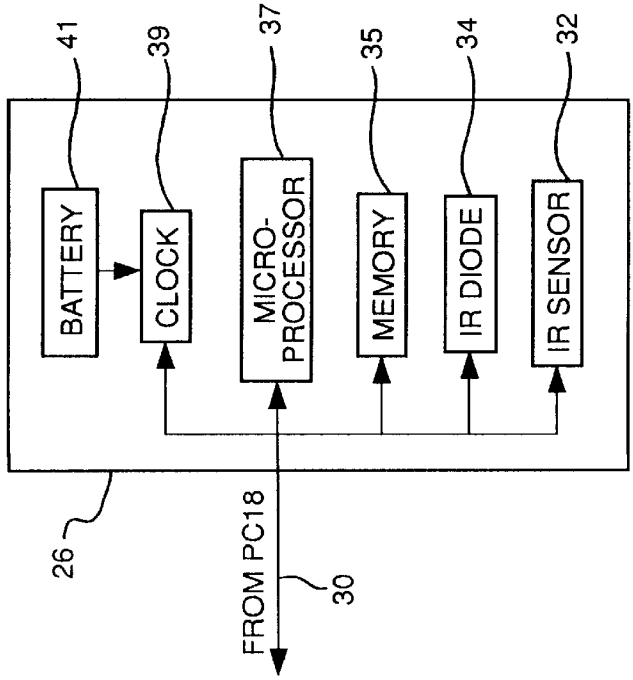

FIG - 3

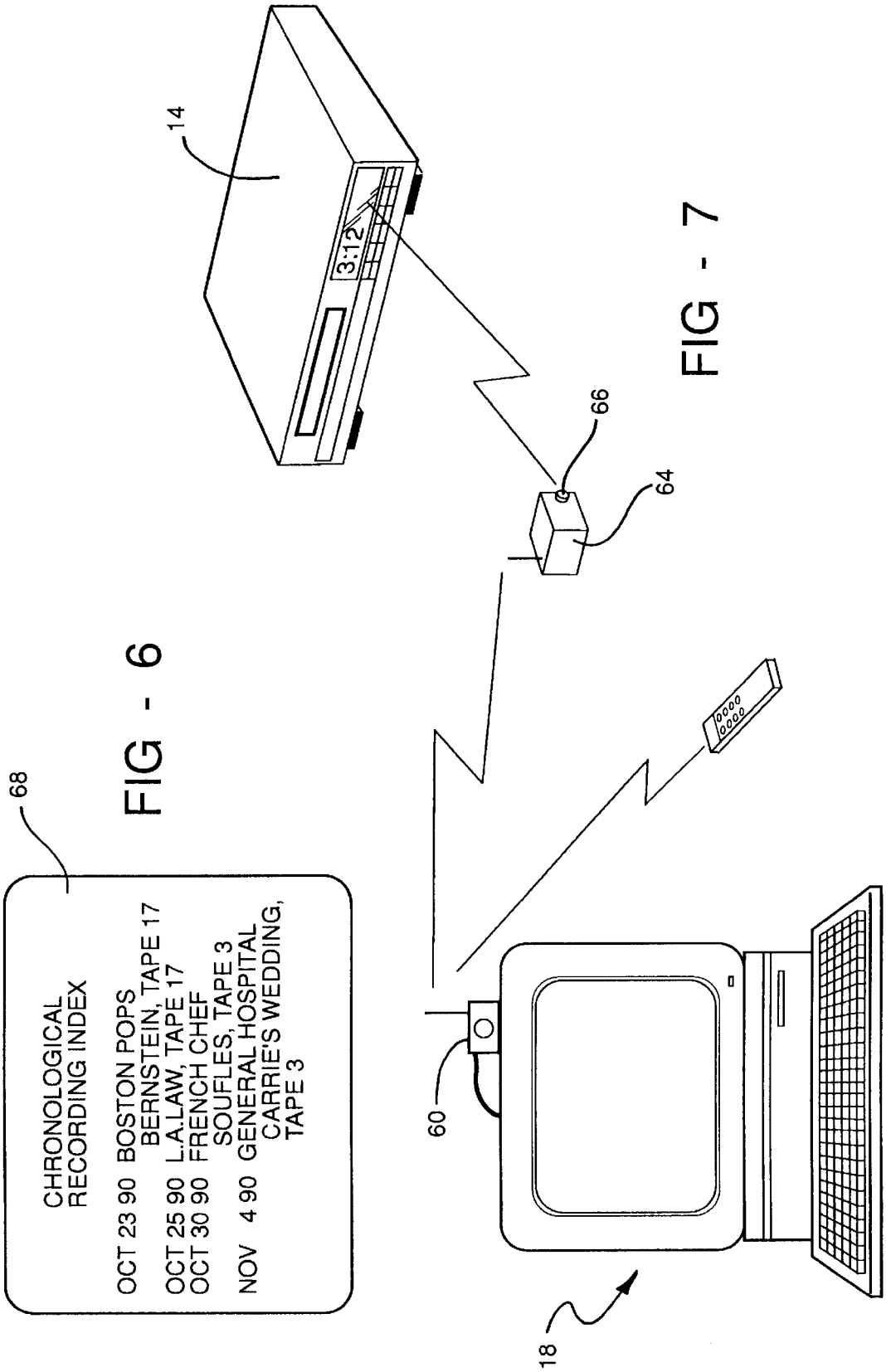
14
3:12
66
64
60
18
68
CHRONOLOGICAL
RECORDING INDEX
OCT 23 90 BOSTON POPS
BERNSTEIN, TAPE 17
OCT 25 90 L.A.LAW, TAPE 17
OCT 30 90 FRENCH CHEF
SOUFLES, TAPE 3
NOV 4 90 GENERAL HOSPITAL
CARRIE'S WEDDING,
TAPE 3

FIG - 6

FIG - 7

METHOD AND APPARATUS FOR RECEIVING CUSTOMIZED TELEVISION PROGRAMMING INFORMATION BY TRANSMITTING GEOGRAPHIC LOCATION TO A SERVICE PROVIDER THROUGH A WIDE-AREA NETWORK

RELATED APPLICATIONS

This is a continuation of application Ser. No. 08/287,343, filed Aug. 8, 1994, now U.S. Pat. No. 5,692,214 which is a continuation-in-part of Ser. No. 07/848,338, filed Mar. 9, 1992, now abandoned, which is a continuation-in-part of Ser. No. 802,249, filed Dec. 4, 1991 (now abandoned).

FIELD OF THE INVENTION

This invention relates to a method and apparatus for controlling a video recorder to allow the unattended recording of future occurring programs using a personal computer and more particularly to such a method and apparatus which provides a display of a schedule of future programming available to the recorder on the personal computer.

BACKGROUND OF THE INVENTION

My U.S. Pat. No. 4,908,713 discloses a system for providing a schedule of future video programming available to a video recorder to a database memory located at the recorder so that the operator may display selected sections of the future schedule as an aid in choosing programs for recording. The schedule may be provided to the memory and updated either by broadcasting schedule information or by delivering disposable memories to the system on a subscription basis. Other of my applications disclose such systems in which the video recorder is programmed for unattended recording of a future program by simply pointing a cursor at the listing of that program on the schedule display. Since the system already stores the data required to record the program, it is unnecessary for the operator to re-enter the same data. My application Ser. No. 802,249 further discloses such a system in which the local memory stores the identification of programs that have been recorded and allows their display in order to select previously recorded programs for viewing.

These systems greatly simplify the problems of selecting programs for recording, actually performing the recording process, and viewing recorded programs. They suffer from the disadvantage of adding hardware and software to existing video cassette recorders or cable boxes which do not contain a schedule memory and a database program for selecting particular entries on the memory for display.

SUMMARY OF THE INVENTION

The present invention allows the implementation of the electronic schedule memory and cursor-based programming on a conventional video recorder through use of an associated personal computer which communicates with the video recorder via infrared signals of the type used for remote control of the video recorder. The infrared signals are preferably generated by a transmitter connected to an output port of the personal computer and are driven by signals generated by an application program run by the personal computer. The same transmitter may control the tuner of an associated cable box.

Future programming schedule information may be provided to the personal computer from a remote database by telephonic communication, by broadcast, or by subscription

provision of disposable memories. The schedule information may be displayed on the monitor of the personal computer under control of a database program allowing chronological, alphabetical or topical selection and the operator may move a cursor on the display screen to point to a particular program to select it for future recording. The remote transmitter connected to the personal computer output port can send signals to the video recorder at the time the selection is made, allowing the future unattended programming memory of the video recorder to initiate the recording of a specific channel at the proper time or the remote may exercise control over the video recorder at the time the recording is to be made.

The personal computer transmitter may be instructed as to the particular code systems used by the video recorder remote control either by information transmitted from a remote database provider based on the identification of the make of the video recorder by the computer use, or through use of an initialization program which displays commands to the computer operator on the monitor of the personal computer directing the operator to press selected buttons on the remote transmitter provided with the video recorder. The computer program thus learns and stores the required remote codes. In the same manner, the personal computer can control an associated cable tuner to ensure that the channel specified for recording is provided to the VCR. The personal computer program can also store and display an index of programming that has been recorded by the system.

Through use of the method and apparatus of the present invention the advantages of an electronic schedule guide and cursor-controlled programming of the video recorder may be achieved without the provision of a specialized form of cassette recorder or cable box.

Other objectives, advantages and applications of the present invention will be made apparent by the following detailed description of the preferred embodiment of the invention. The description makes reference to the accompanying drawings in which:

DETAILED DESCRIPTION OF THE DRAWINGS

FIG. **1** illustrates a personal computer and television viewing system including a TV receiver, a video recorder and a cable box, implementing the preferred embodiment of the present invention;

FIG. **2** is a schematic diagram of the preferred embodiment of the invention;

FIG. **3** is a schematic diagram of the IR transmitter/receiver;

FIG. **4** is a perspective view of the rear of a personal computer illustrating the method of attachment of an infrared transmitter and receiver to an I/O port of the computer;

FIG. **5** is an illustration of a screen displayed on the personal computer monitor during an initialization procedure; and

FIG. **6** is an illustration of a personal computer screen displaying an index of recorded programs and the tape cassettes on which each is recorded; and

FIG. **7** is an illustration of a second embodiment of the invention in which the personal computer and video recorder are located remotely from one another and the output signals from the personal computer are transmitted by radio to an infrared transmitter for control of the video recorder.

DETAILED DESCRIPTION OF THE PREFERRED EMBODIMENT

Referring to FIG. **1**, the preferred embodiment of the invention employs a television recording and receiving

system, generally indicated at **10**, comprising a conventional television receiver **12**, a video cassette recorder **14** and a cable tuner and descrambler box **16**. A variety of known forms of interconnection can be made between the cable box **16**, the recorder **14** and the television receiver **12** to allow either the recording or viewing of programs tuned by the cable box **16** or the simultaneous viewing of one program and the recording of another. The present invention is equally applicable to broadcast receiver systems which do not employ a cable box and to satellite receivers.

The video recorder **14** will normally be of the type employing an infrared remote control (not shown) as will the tuner in the cable box **16**. The VCR **14** may, but need not necessarily, incorporate a future, unattended recording memory which includes a real time clock (not shown).

The method and apparatus of the present invention further utilizes a conventional personal computer, generally indicated at **18**, incorporating a main computer housing **20**, a keyboard **22** and a monitor **24**. The term "personal computer" is used broadly to incorporate work stations, minicomputers and portable units.

The personal computer **18** is conventional but is provided with a special application program to implement the present invention. The organization of this application program is well within the skill of a programmer using the functional description of the program provided herein.

An infrared transmitter and receiver **26** is connected to an I/O port of the personal computer, preferably a parallel port, by a male connector **28** and a cable **30**. The infrared unit **26** incorporates a conventional infrared signal detector **32** and an infrared emitter **34**. In alternative embodiments the signals could represent other forms of electromagnetic or supersonic transmission, "infrared" is hereinafter used to define the generic form of signals.

The infrared signals emitted by the unit **26** are picked up by the infrared remote receiver of the video recorder **14** and may also be picked up by the infrared recorder of the cable box **16** to control its tuner.

The application program is loaded into the personal computer via a diskette or the like. The program requires as data the schedule of future programming available to the system **10** from a programming source **38**, such as a cable or the like, for a particular period of time such as a week or month.

In the preferred embodiment of the invention the schedule information is provided to the personal computer **18** from a remote database **40**, which may constitute a database provider such as "COMPUSERVE," "PRODIGY" or the like. This information may be customized for the cable service **38** available to the system through an initialization routine in which the computer operator keys in the postal ZIP code of his location and, if necessary, an identification of the cable service provider. The head end database uses this information to provide the computer **18** with the schedule of programming for that service. The operator of the personal computer system **18** may communicate with the schedule source over phone lines **42** using modems **44** at each end. Alternatively, the personal computer could employ a program in which the system automatically communicates with the schedule source **40** at predetermined periods, such as each morning at 4:00 a.m. or the like, to update the schedule stored in the personal computer **18**. As another alternative, diskettes could mailed out to the personal computer on a subscription basis or the schedule information could be provided to the personal computer via cablecast or broadcast.

Through use of a database program employing menus, submenus and the like, the operator may obtain a display of programming for a particular period of time, such as that illustrated at **46** in FIG. **1**. To select a listed program for future recording the operator may move a cursor **48** into super-position with the listing. Alternatively, two or three digit numbers could be associated with each listing and the operator could signal a programming selection by hitting an appropriate number on the keyboard **22**.

In the preferred embodiment of the invention this selection transfers information relating to the programming selection to a memory **35** within the IR unit **26** (FIG. **3**). The unit **26** also includes a microprocessor **37**, a real time clock **39** and a power supply battery **41**. The microprocessor **37** continually compares the present time signal from the clock **39** with the start time of the programs to be recorded as stored in the memory **35** and sends an appropriate infrared code to the VCR **14** (and, if appropriate, the cable box **16**) at the start time. A similar signal at the programmed conclusion time of the program terminates the recording. This arrangement eliminates the need for the computer to continually remain in the on state.

In alternative embodiments of the invention employing programmable cable tuners or programmable satellite receivers, the infrared transmissions could be used to program these units.

Alternatively, the control signals to the IR unit **26** may be provided in real time by the computer **18** under control of its internal clock. The IR unit might then simply consist of an IR diode connected to the personal computer **18** by a long wire so the diode may be placed near the receiver **10**. At the time the recording is to be initiated, the personal computer transmits signals from an I/O port through the cable **30** to the infrared transmitter/receiver **26**. The unit **26** then send signals to the video cassette recorder **14**, which tune the set to the required channel and initiates the recording. Signals might also be sent to the cable box **16** to cause it to tune to the appropriate channel. As a third alternative, when the operator makes a programming selection, the information relating to that selection, including channel and the start and stop time could be immediately sent from unit **26** to video cassette recorder **14** to program the recorder for the future unattended recording of the desired program.

Alternatively the unit **26** may be detachable from the computer **18** so that after it is loaded with data on programs to be recorded it may be detached and moved into proximity with the receiver system **10**, which may be located in another room.

To perform the transmission function, the personal computer **18** requires information as to the nature of the remote control codes used by the video recorder **14** and the cable box **16** if that is additionally to be controlled. Preferably, this information is provided from the remote database **40** during an initialization routine in which the operator keys in the identification of the make and model of the VCR and cable box. Alternatively, to acquire this information, the application program for the personal computer may go through an initialization routine using screens of the type illustrated at **50** in FIG. **5**. These screens advise the computer operator to press selected buttons on the remote control transmitter **52** for the VCR **14** or the transmitter for the cable box **16**. The personal computer application program- receives signals from the IR sensor **32** and stores these codes for use in transmitting control signals to the video recorder **14** and the cable box **16**. The application program may alternatively store a database of the control codes for popular video

recorders or cable boxes and thus allow the unit to be identified by only pressing one or two selected keys, or it may require the operator to go through all of the keys in order to develop the appropriate remote control schedule.

In another embodiment of the invention the unit **26** includes sound detection apparatus. This provides several advantages, including the ability to receive information in acoustic form either from the personal computer or over a telephone line, for example using an acoustic coupler. An increasing number of conventional personal computers are now provided in standard form with a sound generating capability, and even if not factory supplied, numerous sound-generating modules and add-on cards are widely available as options. With such a capability residing in the personal computer, information may be transmitted from the personal computer to the module **26** in acoustical form. For example, information pertaining to a program to be recorded may be delivered in this manner, as well as any control code information required for proper activation and/or tuning of other system components, including the video recorder or cable box, to ensure that the proper channel is tuned at the appropriate time.

The ability to accept an acoustical signal may further facilitate an entirely wireless implementation of module **26**, and may also enable module **26** to be partially or completely compatible with automated VCR programming techniques, including the VCRPlus™ system which is currently being marketed commercially. With VCRPlus™ program listings include a multi-digit numerical code which is entered by an operator to bring about the automatic, unattended recording of a particular program without the need for entering a more sophisticated sequence of information such as program start time, stop time, channel tuning, and so forth, as is presently entered through typical on-screen programming sequences. Certain of the VCRPlus™ modules contain acoustic couplers, enabling them to be programmed over a standard telephone line. Utilizing this capability, a customer dials a service telephone number and informs a representative or uses touch tone codes to enter information such as VCR make/manufacturer, cable tuner make/manufacturer, and geographic information, for example, in the form of a zip code. Given this information, the system then down-loads the appropriate control codes to be used by the VCRPlus™ module to ensure that the entry of a VCRPlus™ numerical code records the desired program for that user in their particular geographic area.

The present invention may take advantage of some or all of the VCRPlus™ features or similar features of any similar automated programming system. If the database received and stored in the personal computer by the present invention includes encoded program information such as VCRPlus™ codes, these may be delivered directly from the personal computer to the module **26** instead of more detailed program-related information. Although presently available VCRPlus™ control units typically only receive control code information in acoustic form, with the numerical code associated with a desired program entered via keypad, such units contain all of the hardware necessary to accept the numerical code in acoustic form as well. In such a case, then, with the present invention storing a large database of programs in the personal computer, the VCRPlus™ code alone may be delivered to the remote unit **26** to bring about the desired programming sequence. In the event that the unit **26** includes a sound detection capability, the numerical code may be transmitted by the personal computer to the module **26** in acoustic form, in addition to the remote-control codes, which may also be delivered in acoustic form, either from the personal computer or over a phone line as is currently the case with the VCRPlus™ system. In the event that the personal computer is used to transmit the control codes to the module **26**, regardless of the form in which such codes are delivered, a look-up table may be provided to the personal computer either in disk form or through a separate telephonic connection, and upon entry of equipment make/model and any required geographic information by the operator through the keyboard provided on the personal computer, a look-up may be carried out by the computer so that the appropriate control codes are used for all equipment involved.

The embodiment of the invention illustrated in FIG. **7** is utilized in systems where the cassette recorder **14** is located a large distance from the personal computer **18**, such as in another room of the house. In this system the remote I/R transmitter **26** is replaced by a radio transmitter **60**. The radio signals are received by a remote receiver **64** disposed physically in front of the video recorder **14**. Receiver **64** includes an infrared transmitter **66** and the received radio signals are transmitted into serial infrared commands which are transmitted by the unit **64** to the infrared receiver of the video recorder **14**.

The application program for the remote television receiver **18** may also maintain a database of the programs that have been recorded by the system and allow display of these programs on the monitor of the personal computer. The identifying information may include codes as to the nature of the program such as a tennis match, comedy, movie or the like to allow menu-driven database operations to be used in the selection of programming for viewing. The information may record storage location of the programming, in terms of video cassettes, which the operator may enter into the system via the keyboard. A typical screen of this index is illustrated at **68** in FIG. **6**.

Having thus described my invention, I claim:

1. In a television distribution arrangement wherein a plurality of geographically dispersed television viewing locations receive television programming from a source of such programming, a method of receiving information specific to the type of programming available to a particular one of the viewing locations, the method comprising the steps of:

providing a computerized unit at the particular viewing location, the unit including an operator input and a modem;

establishing a connection to a wide-area network through the modem;

transmitting, from the computerized unit, information to a service provider through the wide-area network regarding the geographical location of the particular viewing location; and

receiving, from the service provider, information specific to the type of programming available to the particular viewing location.

2. The method of claim **1**, wherein the information transmitted to the service provider includes the Zip Code associated with the particular viewing location.

3. The method of claim **1**, wherein the information received from the service provider includes a schedule of the television programming available to the particular viewing location.

4. The method of claim **1**, wherein the computerized unit is interfaced to a display, and wherein the method further includes the step of displaying the information specific to the type of programming available to the particular viewing location.

5. The method of claim 1, wherein the computerized unit further includes a memory for storing the information specific to the type of programming available to the particular viewing location.

6. A method of receiving customized television programming schedule information, comprising the steps of:

providing, at a television viewing location, a controller interfaced to a bidirectional modem and a display device;

establishing a connection to a wide-area network through the modem;

transmitting, from the television viewing location, information to a service provider through the wide-area network regarding the geographical area of the viewing location;

receiving, from the service provider, television programming schedule information specific to the viewing location; and

viewing the information on the display device.

7. The method of claim 6, wherein the information transmitted to the service provider through the wide-area network regarding the geographical area of the viewing location is the Zip Code associated with the viewing location.

8. A system enabling a viewer of a television receiver to download information specific to the type of television programming available to the receiver, the system comprising:

an electronic terminal unit including an operator input, a bidirectional modem, and a controller in communication with the operator input and the modem, the controller being programmed to perform the following functions:

a) establish a connection to a service provider through the modem,

b) receive information through the operator input pertaining to the geographic location of the television receiver,

c) transmit the information pertaining to the geographic location of the television receiver to the service provider, and

d) receive, from the service provider, the information specific to the type of television programming available to the receiver.

9. The system of claim 8, further including an electronic television interface in communication with the controller, the controller being further programmed to affect the operation of the television receiver in accordance with the information specific to the type of television programming available to the receiver.

10. The system of claim 8, further including a memory in communication with the controller for storing and retrieving the information specific to the type of television programming available to the receiver.

* * * * *