IN THE UNITED STATES DISTRICT COURT

FOR THE DISTRICT OF DELAWARE

HELICOS BIOSCIENCES CORPORATION	)	
Plaintiff,	)	
v.	)	Civ. No. 10-735-SLR
ILLUMINA, INC.,	)	
Defendant.	)	

Richard D. Kirk, Esquire and Stephen B. Brauerman, Esquire of Bayard, P.A., Wilmington, Delaware. Counsel for Plaintiff. Of Counsel: Douglas J. Kline, Esquire, Daniel M. Forman, Esquire, Brian A. Fairchild, Esquire, Sheryl Koval Garko, Esquire and Kurt M. Kjelland, Esquire of Goodwin Procter LLP.

Steven J. Balick, Esquire and Lauren E. Maguire, Esquire of Ashby & Geddes, Wilmington, Delaware. Counsel for Defendant. Of Counsel: Jeffrey N. Costakos, Esquire and Rebecca Jan Pirozzolo-Mellowes, Esquire of Foley & Lardner LLP.

MEMORANDUM OPINION

Dated: August 28, 2012
Wilmington, Delaware

ROBINSON, District Judge

I. INTRODUCTION

Plaintiff Helicos Biosciences Corporation ("Helicos") filed a patent infringement complaint against Pacific Biosciences of California ("PacBio") on August 27, 2010, alleging infringement of its U.S. Patent Nos. 7,645,596 ("the '596 patent"), 7,037,687 ("the '687 patent"), 7,169,560 ("the '560 patent"), and 7,767,400 ("the '400 patent"). (D.I. 1) Prior to PacBio's answer, Helicos amended its complaint adding allegations of infringement of the '596, '687 and '560 patents by Life Technologies Corporation ("Life") and of the '687, '560 patents by Illumina, Inc. ("Illumina"); Illumina is also alleged to infringe Helicos's U.S. Patent No. 7,593,109 ("the '109 patent"). (D.I. 9) PacBio answered and asserted counterclaims for declaratory judgment of noninfringement, invalidity, and unenforceability of the '596, '687, '560 and '400 patents. (D.I. 14) Life also brought counterclaims for declaratory judgment of noninfringement and invalidity of the patents asserted against it. (D.I. 21) Illumina brought counterclaims for declaratory judgment of noninfringement and invalidity of the '560, '687 and '109 patents asserted against it, and for a declaratory judgment that the '560 patent is unenforceable. (D.I. 22)

In December 2011, the court denied PacBio's motion to stay the litigation pending reexamination of the '596, '687, '560 and '400 patents, and also denied Life's motion to "drop it from this suit or, in the alternative, sever and stay the claims against Life." (D.I. 170; D.I. 175) By agreement of the parties and the court, Helicos filed a second amended complaint adding plaintiff Arizona Science and Technology Enterprises LLC d/b/a Arizona Technology Enterprises ("AZTE"), the exclusive licensee

of the '596 and '687 patents, to the suit. (D.I. 157, ex. 1; D.I. 159, ex. 1; D.I. 163; D.I. 171) On February 15, 2012, Helicos, AZTE and Illumina entered a stipulation of dismissal with respect to these parties' claims regarding the '560 patent. (D.I. 213)

On May 3, 2012, following an evidentiary hearing, the court denied a motion to transfer venue to the Northern District of California filed by PacBio, Life and Illumina. (D.I. 251) PacBio was dismissed from the suit on May 10, 2012. (D.I. 255) The '596, '687 and '560 patents have been finally rejected by the examiner in concurrent reexamination proceedings; the PTO issued notices of right to appeal on April 26 and May 9, 2012. (D.I. 262 at 1) On June 14, 2012, Helicos and AZTE executed a covenant not to sue Life on the '596, '687 and '560 patents. (D.I. 302) On June 15, 2012, Helicos and AZTE stipulated to the dismissal of their claims of infringement of the '687 patent against Illumina, and Illumina stipulated to the dismissal of its related counterclaims. (D.I. 301) A stipulation of dismissal was filed with respect to Life on June 28, 2012. (D.I. 336)

Remaining are Helicos's claims that Illumina infringes the '109 patent.[1] Currently pending before the court are several motions: (1) Illumina's motion for summary judgment of invalidity of the '109 patent (D.I. 266);[2] (2) Helicos's motion for summary judgment of infringement of claims 1-4, 6-7, 9-10 and 13 of the '109 patent (D.I. 272);[3]

[1]Because AZTE is not the owner or exclusive licensee of the remaining patent, and its claims have been fully resolved, AZTE has been terminated as a party.

[2]The portion of Illumina's motion relating to the '687 patent is moot.

[3]Illumina's motion is mooted in part by Helicos's disclaiming of claims 1 and 6 of the '109 patent under 37 C.F.R. § 1.321(a). (D.I. 335)

and (3) Illumina's motion for summary judgment of noninfringement (D.I. 291). The court has jurisdiction over these matters pursuant to 28 U.S.C. § 1338.

II. BACKGROUND

A. The Parties

Helicos is a Delaware corporation with its principal place of business in Cambridge, Massachusetts. (D.I. 171 at ¶ 2) Founded in 2004, Helicos is a life science company in the business of developing genetic analysis techniques for the research, discovery, and clinical diagnostics markets. (*Id.* at ¶ 3)

Illumina is a Delaware corporation with its principal place of business in San Diego, California. (D.I. 178 at ¶ 8) Illumina is also a life science company has been developing products for use in analyzing genetic variation and function since 1998. (D.I. 267 at 2)

B. The '109 Patent

The '109 patent, entitled "Apparatus and Methods for Analyzing Samples," was issued September 22, 2009. One inventor, Kevin Ulmer, is named. The '109 patent is a continuation of the application now issued as U.S. Patent No. 7,276,720; priority is claimed to a provisional application filed July 19, 2004. Helicos is listed as the assignee.

The abstract of the '109 patent characterizes the invention as "related to apparatus, systems and methods for analyzing biological samples." There are two general components to the foregoing: the use of a vacuum source to pull microfluidic volumes through analytical equipment; and the use of "optical equipment in conjunction

with analytical equipment to analyze samples and control the operation thereof." ('109 patent, abstract) The latter is at issue on the present motions.

The background section describes certain disadvantages of prior art, vacuum-driven systems for analyzing samples in a flow cell. For example, leaks, contaminants, and air bubbles are all of concern. ('109 patent at col. 1:25-57) "In analyzing microfluidic volumes and related biological materials using a light source, it is desirable for the light source to hit the sample in such a way that results in total internal reflection flourescence ('TIRF')," or "an optical phenomenon that occurs when light propagating in a dense medium, such as glass, meets an interface with a less dense medium such as water." (*Id.*, col. 1:58-64) At a certain angle, called the "critical angle," all of the light is refracted through the interface into the dense medium. (*Id.* at col. 1:64-col. 2:1) Some of the beam's energy "propagates a short distance," or "about 100 nm," "into the less dense medium, generating an evanescent wave." (*Id.*, col. 2:1-4) This energy can either be absorbed back into the dense medium or, if present, absorbed by a flourophore molecule within the evanescent wave, where it can absorb photons. (*Id.* at col. 2:4-10) Excited flourophores can be observed using an intensified CCD camera. (*Id.*) "Accurately maintaining the critical angle to obtain TIRF in a dynamic system is difficult." (*Id.*)

The court focuses on the lighting system aspect of the invention, which includes "a first light source for analyzing a sample of interest and a second light source. The first light source defines a first optical path that intersects a sample of interest and the second light source operates with the first light source for determining a position of the

first optical path." (*Id.*, col. 2:22-27) That is, the "first beam of light is for analyzing the sample of interest." (*Id.*, col. 2:66-67) The second beam "may be used to continuously monitor the position of the first optical path." (*Id.* at col. 2:50-51)

In various embodiments, "[t]he first beam of light is at least partially coaxial with the second beam of light." (*Id.* at col. 2:65-66) The second light source may be "directed to a position sensor for sensing an angle of reflection of the first optical path relative to the sample of interest," generating a signal which will cause the position of the first optical path to be adjusted to vary the angle of reflection. (*Id.* at col. 2:30-39) The beams generally work simultaneously, with the goal of maintaining substantially total reflection of the first light source relative to the sample of interest. (*Id.* at col. 2:28-39) Optionally, a third light source may be included, defining a third optical path at least partially coaxial with the first optical path, and operating simultaneously. (*Id.* at col. 2:45-50)

In other aspects, the invention relates to a system for analyzing a sample, including a flow cell, passive vacuum source, lighting system (as described above) and optical instrument. (*Id.* at col. 3:7-33) An apparatus for handling microflouridic volumes ("such as biological samples for analysis") is also disclosed, which includes a passive vacuum source and flow cell. (*Id.* at col. 3:34-46) The specification goes on to detail how the apparatus and system of the invention can be used for detecting single molecules, for example, a flow cell including a bound nucleotide and an attached primer (*id.*, col. 3:47-56) and applying a vacuum to "a flow cell that defines a channel that is treated to identify specific molecules" (*id.* at col. 4:14-19). Another method involves

"attaching template nucleic acids to a flow cell in the presence of a primer for template-dependent nucleic acid synthesis." That is, individual template nucleic acids are positioned on the flow cell so that each is individually optically resolvable, "dye-labeled primers [are] hybridize[d] to individual templates," the label is excited, and the emission spectrum is detected and compared to known spectra to identify the sequence. (*Id.* at col. 4:36-67)

Finally, the '109 patent discloses a "flow cell for analyzing single molecules such as nucleotides," and a slide to use in such a flow cell, which can include "at least one nucleotide bound to a surface of the slide." (*Id.* at col. 5:5-22) A coverslip embodiment is also described. (*Id.* at col. 5:22-36)

C. Claims at Issue

Helicos originally asserted claims 1, 2-4, 6-7, 9-10 and 13 of the '109 patent against Illumina. As noted above, Helicos disclaimed claims 1 and 6 with the PTO pursuant to 37 C.F.R. § 1.321(a).[4] (D.I. 335) Remaining in suit, therefore, are dependent claims 2-4, 7, 9-10 and 13 of the '109 patent (hereinafter, the "asserted claims"). For purposes of analyzing the dependent claims remaining in suit, the court reproduces claim 1 below.

1. A system for analyzing a sample, comprising:

a flow cell;

---

[4]"A patentee owning the whole or any sectional interest in a patent may disclaim any complete claim or claims in a patent. In like manner any patentee may disclaim or dedicate to the public the entire term, or any terminal part of the term, of the patent granted. Such disclaimer is binding upon the grantee and its successors or assigns. A notice of the disclaimer is published in the Official Gazette and attached to the printed copies of the specification. . . ."

> a lighting system for illuminating the sample in the flow cell; and
>
> an optical instrument for viewing the sample in the flow cell,
>
> wherein the lighting system comprises:
>
> one or more analytical light sources, each light source defining an optical path that intersects the sample; and
>
> a focusing light source operating with any one of the analytical light sources to focus said optical instrument on the sample.

Claim 2 adds the additional requirement that "the optical system comprises two or more analytical light sources." Claim 3 further limits claim 1 and requires "a stage for receiving the flow cell, wherein the stage is movable in at least one direction." Claim 4 depends from claim 1 and requires at least one of the analytical light sources and the focusing light source to operate simultaneously. The remaining dependent claims add the following limitations to claim 1: (1) that "each of the analytical light sources emit light of a different wavelength" (claim 7); (2) the "flow cell comprises a surface for receiving a nucleotide (claim 9); (3) and the "illumination and viewing employs total internal reflection flourescence (TIRF)" (claim 13). Claim 10 depends further from claim 9, and requires that "the surface of the flow cell comprises a primer for bonding the nucleotide thereto."

III. STANDARD OF REVIEW

A court shall grant summary judgment only if "the pleadings, depositions, answers to interrogatories, and admissions on file, together with the affidavits, if any, show that there is no genuine issue as to any material fact and that the moving party is entitled to judgment as a matter of law." Fed. R. Civ. P. 56(c). The moving party bears the burden of proving that no genuine issue of material fact exists. *See Matsushita*

Elec. Indus. Co. v. Zenith Radio Corp., 475 U.S. 574, 586 n.10 (1986). "Facts that could alter the outcome are 'material,' and disputes are 'genuine' if evidence exists from which a rational person could conclude that the position of the person with the burden of proof on the disputed issue is correct." *Horowitz v. Fed. Kemper Life Assurance Co.*, 57 F.3d 300, 302 n.1 (3d Cir. 1995) (internal citations omitted). If the moving party has demonstrated an absence of material fact, the nonmoving party then "must come forward with 'specific facts showing that there is a genuine issue for trial.'" *Matsushita*, 475 U.S. at 587 (quoting Fed. R. Civ. P. 56(e)). The court will "view the underlying facts and all reasonable inferences therefrom in the light most favorable to the party opposing the motion." *Pa. Coal Ass'n v. Babbitt*, 63 F.3d 231, 236 (3d Cir. 1995). The mere existence of some evidence in support of the nonmoving party, however, will not be sufficient for denial of a motion for summary judgment; there must be enough evidence to enable a jury reasonably to find for the nonmoving party on that issue. *See Anderson v. Liberty Lobby, Inc.*, 477 U.S. 242, 249 (1986). If the nonmoving party fails to make a sufficient showing on an essential element of its case with respect to which it has the burden of proof, the moving party is entitled to judgment as a matter of law. *See Celotex Corp. v. Catrett*, 477 U.S. 317, 322 (1986).

IV. DISCUSSION

Illumina contends that the asserted claims are invalid for lack of an adequate written description, lack of enablement, and anticipated and/or rendered obvious in view of the prior art. The parties also dispute whether Illumina's Laser HiSeq 2000, HiScan and HiScan SQ products, along with all of its MiSeq, HiSeq1000, HiSeq1500, and

HiSeq2500 products, infringe any of the asserted claims. The parties have concurrently briefed two claim terms requiring construction: "an optical instrument for viewing the sample in the flow cell;" and "a focusing light source operating with any one of the analytical light sources to focus said optical instrument on the sample."[5] (D.I. 250 at 6) While Illumina has proffered constructions for both terms, Helicos does not propose any constructions for either term, arguing that the plain meaning should apply. (*Id.*) Because the issues of claim construction are central to the parties' motions, the court shall address them at the forefront.

A. Claim Construction

1. Standards

Claim construction is a matter of law. *Phillips v. AWH Corp.*, 415 F.3d 1303, 1330 (Fed. Cir. 2005) (en banc). Claim construction focuses on intrinsic evidence - the claims, specification and prosecution history – because intrinsic evidence is "the most significant source of the legally operative meaning of disputed claim language." *Vitronics Corp. v. Conceptronic, Inc.*, 90 F.3d 1576, 1582 (Fed. Cir. 1996); *Markman v. Westview Instruments, Inc.,* 52 F.3d 967, 979 (Fed. Cir. 1995) (en banc), *aff'd*, 517 U.S. 370 (1996). Claims must be interpreted from the perspective of one of ordinary skill in the relevant art at the time of the invention. *Phillips*, 415 F.3d at 1313.

Claim construction starts with the claims, *id.* at 1312, and remains centered on the words of the claims throughout. *Interactive Gift Express, Inc. v. Compuserve*, *Inc.*,

[5]While the parties have separately identified "operating with" as it appears within this longer limitation, the court declines to parse the claim in this manner and construes the limitation as a whole.

256 F.3d 1323, 1331 (Fed. Cir. 2001). In the absence of an express intent to impart different meaning to claim terms, the terms are presumed to have their ordinary meaning. *Id.* Claims, however, must be read in view of the specification and prosecution history. Indeed, the specification is often "the single best guide to the meaning of a disputed term." *Phillips*, 415 F.3d at 1315.

2. "A focusing light source operating with any one of the analytical light sources to focus said optical instrument on the sample"

The parties agree that there is no explicit description in the '109 patent specification regarding either the concept of "focus" or a "focusing light source." It is Illumina's position that, in view of the lack of written description support, the court must construe the claims "to preserve the[ir] validity" by limiting the claims' scope "to the system disclosed in the patent – namely, a light source that alters the angle of the optical path of one of the analytical light sources." (D.I. 263 at 30) Claim construction and written description analyses "serve related functions in determining whether a claim is commensurate with the scope of the specification – a court looks to the specification for guidance to ascertain the scope of the claim in claim construction; it also looks to the specification to decide whether the disclosure provides adequate support for the claims in [a] written description analysis." *Revolution Eyewear, Inc. v. Aspex Eyewear, Inc.*, 563 F.3d 1358, 1367 (Fed. Cir. 2009). The court begins, then, with Helicos's referenced support for the limitation.

In its opening papers, Helicos cursorily references figure 12B of the '109 patent as describing "the optics required for a focusing system." (D.I. 257 at 22) No further discussion is provided. In its reply papers, Helicos takes Illumina to task for

"attempt[ing] to limit the 'focusing light source' to something that alters the angle of the optical path of an analytical light source, as described in [f]igures 12A and 12B, [which is] improper, even if altering the angle of the optical path were related to focusing." (D.I. 299 at 20)

At oral argument, Helicos argued that "focusing," or "adjusting the distance between the objective lens and the flow cell," is disclosed through the specification's description of adjusting the distance between the flow cell and objective lens along the Z axis. (D.I. 347 at 20, 46) Helicos pointed out that Illumina's expert, Steven Auger ("Auger"), opines (with respect to written description) that,

> [t]o one skilled in the art, the term "autofocus" would imply a plurality of components in an imaging or viewing system combined in such a way as to measure the quality of focus of the system and to automatically change the distance between the imaging objective lens and the sample such that the conditions described above would occur, e.g., the sample plane and focal plane would be made to coincide. The direction of this motion is generally referred to as the z-axis of an imaging system. Either the sample or the objective lens could be moved along the z-axis to achieve the desired relative positioning.

(D.I. 269, ex. R at ¶ 24) Additionally, Helicos argued that "figure 12A describes a second light source 602B that is used to control the optical instrument,"[6] i.e., "to determine the position of the first optical path 630." ('109 patent, col. 15:60-62; col. 16:31-34)

[6]Helicos's presentation slides were not docketed.

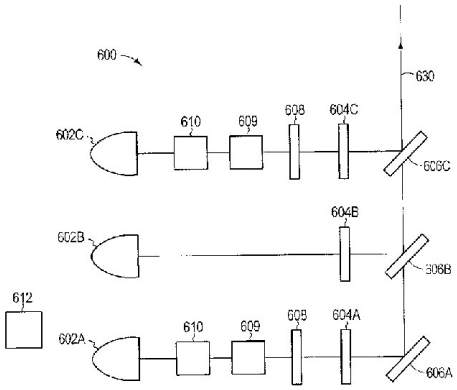

FIG. 12A

Helicos's technical expert, Shimon Weiss, Ph.D. ("Weiss"), has opined that a person of ordinary skill in the art would have understood that the second light source is used for the purpose of controlling the operation of the apparatus.[7] (D.I. 270 at ex. W, ¶ 39) Finally, Helicos argued that figure 7A of the '109 patent specification explicitly shows the computer feedback loop between the computer module, microscope module and the lighting/optics module, as follows.

[7]The court denies Illumina's motion to strike Weiss's § 112 opinions. (D.I. 310) In its motion, Illumina argued that Weiss read the '109 patent specification and the claims together, and could not separate in his mind the disclosure of the "focusing light source" in the claims from the rest of the disclosure. (D.I. 267, ex. T at 112:21-113:10; 114:2-115:15) Claim construction and written description are related analyses. *See Revolution Eyewear*, 563 F.3d at 1367. Only the claims can define the scope of the invention that was required to be adequately described and enabled; the court disagrees with Illumina that knowledge of the claim limitation at issue "infected" Weiss's analyses. To the extent Weiss's opinions are substantively deficient, the court will address those issues following the parties' additional submissions, explained *infra*.

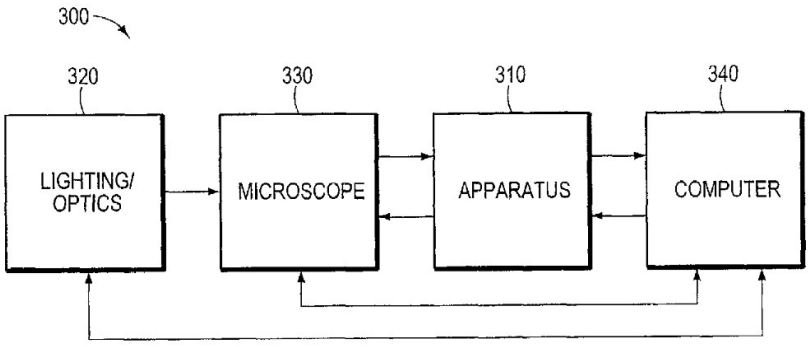

FIG. 7A

As an initial matter, the court disagrees with Helicos that the limitation at issue requires no construction; a lay jury requires context for such unfamiliar technical language. Illumina's proposal – that "the focusing light source focuses the optical instrument on the sample by providing data used to alter the angle of the optical path of at least one analytical light source" – is, however, confusing and unduly narrow. (D.I. 250 at 6) That the "focusing light source **focuses**" the instrument does not illuminate what action is effectuated by the second light source.

Illumina has not identified, nor has the court located, a portion of the specification explicitly requiring that the second light source collect or use data (such as by processing) to alter the angle of the first light beam. For example, a "position sensor" (to which the second beam is directed and which is used to adjust the position of the first beam) is provided in "another aspect" of "various embodiments" of the invention. ('109 patent, col. 2:28; col. 2:54-64) The specification further provides that, "in various embodiments," the system "**could** include a processor for collecting and

processing data generated by the system, storage for storing the data, and means for displaying at least one of the data and the sample." (*Id.*, col. 3:30-33) (emphasis added) "Various embodiments" of the claimed methods include a "processor" for "collecting and processing data generated during the method" which, optionally, can be displayed. (*Id.* at col. 4:31-35)

Figure 1 is described to illustrate "one embodiment" of the invention.[8] (*Id.*, col. 5:47-49)

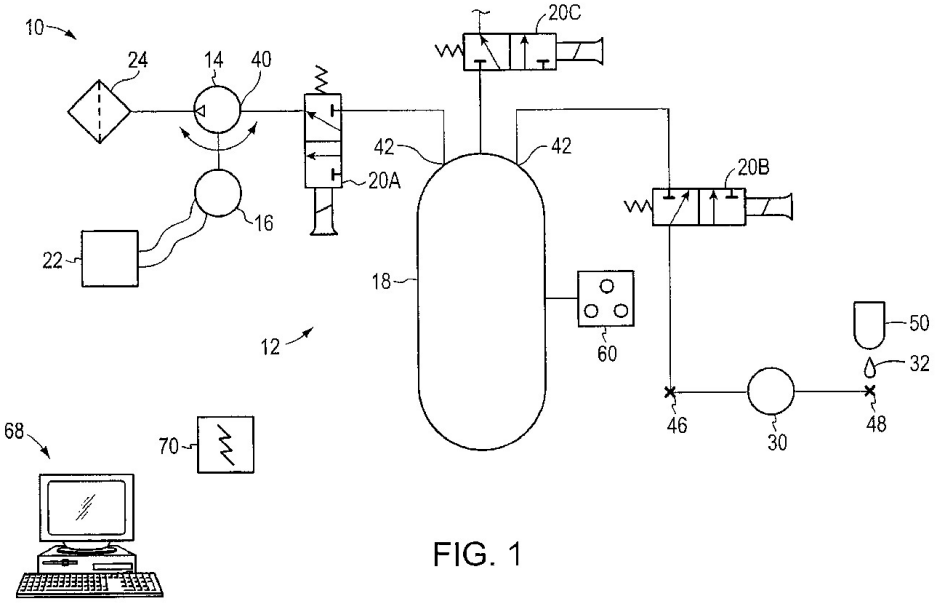

FIG. 1

Therein, a computer (68) and "related software" are disclosed, as follows.

The computer 68 can be a conventional computer system including a

[8]The inventor states that none of the detailed descriptions of embodiments (referencing the figures) are intended to be limiting. ('109 patent, col. 6:15-26)

> processor, hard drive, RAM, a video monitor, and a keyboard, as may be found in a laboratory setting. The computer 68 can interact with the controller 70 to store and process data as necessary to operate the apparatus 10. Alternatively or additionally, the controller 70 can include an internal data processor. Alternatively, the apparatus 10 can be controlled manually.

(*Id.*, col. 8:22-31) This passage refers generally to the processing of data to operate the machine as a whole, not to data used to alter the angle of the optical path of at least one analytical light source.

Elsewhere, the specification describes single-molecule sequencing.

> [A] microfluidic volume comprising a polymerase and a solution of nucleotides is pulled through the flow cell and exposed to the bound templates. Complementary nucleotides will be incorporated in the primer. Detectable labels are used to improve detection. Detection, however, can occur by detecting the indicia of nucleotide incorporation, for example, heat produced by the reaction or pyrophosphate production resulting from incorporation. By monitoring nucleotide incorporation over time, the user can thus determine the sequence of the exposed nucleotide at that position on the slide or coverslip. Because the apparatus permits parallel monitoring of a very large number of individually-resolvable single molecules, each at a separate position on the coverslip, a correspondingly large amount of sequence information can be collected at one time. Thus, computer systems are useful to monitor the observed label during the process and for handling the resulting sequence data. Depending on the nature of the DNA or RNA molecules sequenced, the apparatus can be used, for example, to identify nucleic acid sequence variations associated with disease; to select or monitor a course of treatment; or to monitor gene expression in an individual or in a population of individuals.

(*Id.* at col. 14:55-col. 15:9) The foregoing does not indicate that the "apparatus," itself, processes any sequence information, only that the apparatus can be used with a computer (e.g., (68)) as a tool in identifying and comparing DNA and RNA sequences.

These are the only portions of the specification relating to "data" collection and/or processing. Even if the court were to assume that data is always generated by the second light beam, there is no particular requirement that such data be "used" to alter

the path of an analytical light source. Presumably, this is the reason the parties sought to separately define what is meant by "operates with" –i.e., that the "second light source **operates with** the first light source for determining a position of the first optical path." (*Id*., col. 2:24-27) (emphasis added) The question presented by Illumina's construction is, essentially, whether "operates with" can denote something **other** than the use of data to monitor and/or adjust the angle of reflection generated by the first (analytical) light source.

The court answers in the affirmative. Absent a clear disclaimer of claim scope or other express limitation, the claims must be construed in the broadest reasonable manner, and the court does not find occasion to introduce the concept of "data" or data usage into the claims. *See Rexnord Corp. v. Laitram Corp*., 274 F.3d 1336, 1344 (Fed. Cir. 2001) ("Our case law is clear that an applicant is not required to describe in the specification every conceivable and possible future embodiment of his invention"); *see also Home Diagnostics, Inc. v. LifeScan, Inc*., 381 F.3d 1352, 1357 (Fed. Cir. 2004) (the "specification's silence regarding alternative embodiments" should not be interpreted as a disavowal of claim scope).

In view of the foregoing, the court construes "a focusing light source operating with any one of the analytical light sources to focus said optical instrument on the sample" as follows: "The focusing light source is a second light source that works together with at least one of the analytical light sources to help determine the position of the optical path defined by said analytical light source so that said optical path intersects the sample of interest." ('109 patent, col. 2:22-27) While the court agrees

with Illumina that the '109 patent discusses the use of a second light source to maintain the critical angle for the first light beam, this is discussed as one embodiment of the invention, which is otherwise cast broadly. (*Id.*, col. 2:28-39; col. 2:54-64; col. 2:67-col. 3:6)

B. § 112: "A Focusing Light Source . . ."

1. Standards

The statutory basis for the enablement and written description requirements, § 112 ¶1, provides in relevant part:

> The specification shall contain a written description of the invention, and of the manner and process of making and using it, in such full, clear, concise, and exact terms as to enable any person skilled in the art to which it pertains, or with which it is most nearly connected, to make and use the same . . . .

"The enablement requirement is met where one skilled in the art, having read the specification, could practice the invention without 'undue experimentation.'" *Streck, Inc. v. Research & Diagnostic Systems, Inc.*, 665 F.3d 1269, 1288 (Fed. Cir. 2012) (citation omitted). "While every aspect of a generic claim certainly need not have been carried out by the inventor, or exemplified in the specification, reasonable detail must be provided in order to enable members of the public to understand and carry out the invention." *Genentech, Inc. v. Novo Nordisk A/S*, 108 F.3d 1361, 1366 (Fed. Cir. 1997). The specification need not teach what is well known in the art. *Id.* (citing *Hybritech v. Monoclonal Antibodies, Inc.*, 802 F.2d 1367, 1384 (Fed. Cir. 1986)). A reasonable amount of experimentation may be required, so long as such experimentation is not "undue." *ALZA Corp. v. Andrx Pharmaceuticals, Inc.*, 603 F.3d 935, 940 (Fed. Cir. 2010).

"Whether undue experimentation is needed is not a single, simple factual determination, but rather is a conclusion reached by weighing many factual considerations." *Martek Biosciences Corp. v. Nutrinova, Inc.*, 579 F.3d 1363, 1378 (Fed. Cir. 2009) (citing *In re Wands*, 858 F.2d 731, 737 (Fed. Cir. 1988). The Federal Circuit has provided several factors that may be utilized in determining whether a disclosure would require undue experimentation: (1) the quantity of experimentation necessary; (2) the amount of direction or guidance disclosed in the patent; (3) the presence or absence of working examples in the patent; (4) the nature of the invention; (5) the state of the prior art; (6) the relative skill of those in the art; (7) the predictability of the art; and (8) the breadth of the claims. *In re Wands*, 858 F.2d at 737. These factors are sometimes referred to as the "*Wands* factors." A court need not consider every one of the *Wands* factors in its analysis, rather, a court is only required to consider those factors relevant to the facts of the case. *See Streck, Inc.*, 655 F.3d at 1288 (citing *Amgen, Inc. v. Chugai Pharm. Co., Ltd.*, 927 F.2d 1200, 1213 (Fed. Cir. 1991)).

The enablement requirement is a question of law based on underlying factual inquiries. *See Green Edge Enterprises, LLC v. Rubber Mulch Etc., LLC*, 620 F.3d 1287, 1298-99 (Fed. Cir. 2010) (citation omitted); *Wands*, 858 F.2d at 737. Enablement is determined as of the filing date of the patent application. *In re '318 Patent Infringement Litigation*, 583 F.3d 1317, 1323 (Fed. Cir. 2009) (citation omitted). The burden is on one challenging validity to show, by clear and convincing evidence, that the specification is not enabling. *See Streck, Inc.*, 665 F.3d at 1288 (citation

omitted).

A patent must also contain a written description of the invention. 35 U.S.C. § 112, ¶ 1. The written description requirement is separate and distinct from the enablement requirement. *See Ariad Pharmaceuticals, Inc. v. Eli Lilly and Co.*, 598 F.3d 1336, 1351 (Fed. Cir. 2011). It ensures that "the patentee had possession of the claimed invention at the time of the application, i.e., that the patentee invented what is claimed." *LizardTech, Inc. v. Earth Resource Mapping, Inc.*, 424 F.3d 1336, 1344-45 (Fed. Cir. 2005). The Federal Circuit has stated that the relevant inquiry – "possession as shown in the disclosure" – is an "objective inquiry into the four corners of the specification from the perspective of a person of ordinary skill in the art. Based on that inquiry, the specification must describe an invention understandable to that skilled artisan and show that the inventor actually invented the invention claimed." *Ariad*, 598 F.3d at 1351.

This inquiry is a question of fact; "the level of detail required to satisfy the written description requirement varies depending on the nature and scope of the claims and on the complexity and predictability of the relevant technology." *Id.* (citation omitted). In this regard, Illumina must provide clear and convincing evidence that persons skilled in the art would not recognize in the disclosure a description of the claimed invention. *See PowerOasis, Inc. v. T-Mobile USA, Inc.*, 522 F.3d 1299, 1306-17 (Fed. Cir. 2008) (citation omitted). While compliance with the written description requirement is a question of fact, the issue is "amenable to summary judgment in cases where no reasonable fact finder could return a verdict for the non-moving party." *Id.* at 1307

(citing *Invitrogen Corp. v. Clontech Labs., Inc.*, 429 F.3d 1052, 1072-73 (Fed. Cir. 2005)).

2. Discussion

Illumina has moved for summary judgment of invalidity based on lack of written description and lack of enablement, because the '109 patent does not disclose "a focusing light source operating with any one of the analytical light sources to focus said optical instrument on the sample." As construed, the limitation at issue requires that "[t]he focusing light source is a second light source that works together with at least one of the analytical light sources to help determine the position of the optical path defined by said analytical light source so that said optical path intersects the sample of interest." Put another way, "focus" relates to the direction (or redirection) of the optical path of the first (analytical) light source closer to the critical angle, or total reflection, irrespective of the fact that this act ultimately may facilitate viewing the sample as a sharper image.

In its motion, Illumina cites the testimony of its expert, Auger, who states that "the '109 patent does not describe how the focusing light source works" and provides no illustration of such a system. (D.I. 269, ex. R at ¶ 20) According to Auger, to a person of ordinary skill in the art,

> the term "focus" in the context of TIRF-based imaging, microscopy and DNA sequencing would have been understood to mean that the sample is aligned at a position beyond the imaging (objective) lens such that a sharp image is formed by the system's optics at the system's image sensor, whether that sensor be an eye, film, CCD-camera, or the link. This position is typically planar over the field of view of the system and is commonly referred to as the focal plane.

(*Id.* at ¶ 21)

Auger provides an alternate meaning of the "focal plane" as understood by an ordinary artisan, that is, the plane at which a bundle of rays, passing through the objective perpendicularly, reflects back at an angle identical to that of the original input beam (but on the opposite side of the plane). (D.I. 269, ex. R at ¶ 22) Notably, "[t]he angle required [ ] to maintain total internal reflection is in no way linked to the determination of the focal plane. Total internal reflection can and will occur over any range of angles between the critical angle and the maximum acceptance angle of the objective lens even if the sample is grossly out of focus." (*Id.* at ¶ 23) "In other words, exceeding the critical angle will not put the system in focus, nor will varying the input angle affect the focus. While varying the angle may result in a better image (for example, because the sample is better illuminated), it will not make the image sharper or more in focus." (*Id.* at ¶ 27) Weiss agreed on this point, stating that "altering the angle required to maintain total internal reflection does not itself focus the image." (D.I. 297, ex. A at ¶ 42)

Both experts agree, therefore, that varying the angle of the optical path is not linked to the determination of the focal plane. Helicos's expert, Weiss, explains in this regard that, "[i]nstead, [ ] focusing is achieved by either moving either the sample stage or the objective lens along the Z axis so that the sample plane and focal plane are made to coincide." (D.I. 297, ex. A at ¶ 42) Having defined what "focus" means (albeit not in the context of claim construction), Weiss opines that the specification describes the elements of an "autofocusing" system that was well known in the art at the time of the invention, as well as moving the microscopic stage or optical elements in the Z axis.

(*See id.* at ¶¶ 24, 38-40)[9] Critically absent from Weiss's explanation, however, is how the "focusing light source" effects movement of the sample stage or objective lens along the Z axis by "operating with" at least one analytical light source, as required.

In sum, and based on the record created by the parties, the court concludes that Illumina has demonstrated, by clear and convincing evidence, that the written description requirement has not been met. Although the parties seem to agree on the ordinary meaning of the word "focus" (to wit, "to make an image sharper"), the complete limitation is in dispute – "a focusing light source operating with any one of the analytical light sources to focus said optical instrument on the sample" – implicating the angle (position) of the optical path of at least one analytical light source.[10] The parties agree that varying the angle of the optical path of the analytical light source will not make the image sharper or more in focus and the specification, not surprisingly, contains no description of such.[11] The court has been unable to reconcile the language chosen by

---

[9]Illumina's expert does not disagree that the specification contains a description of a prior art autofocusing system. (D.I. 269, ex. R at ¶ 25)

[10]Recall that, during the claim construction exercise, Helicos chose to ignore the requirements of the complete limitation; Illumina chose to describe the operation of a single embodiment.

[11]The court notes at this juncture Helicos's argument that the absence of any description of the claimed "focusing light source operating with any one of the analytical light sources to focus said optical instrument on the sample" cannot establish lack of enablement, insofar as the inventors were not required to disclose everything known to persons of ordinary skill in the art. (D.I. 296 at 12) In support, Helicos cites Auger's testimony that he could have "looked at claim 1" and created a claimed system in 2004. (*Id.*) (citation omitted) Helicos does not point to any portion of the disclosure that purportedly enables the claims at issue. Nor is there any indication that the disclosure enables the full scope of the claims. Cognizant of Illumina's burden, however, and the fact that neither party presented evidence addressing the *Wands* factors, the court does not grant summary judgment of lack of enablement on this record. In short, while the

the inventor to describe his invention and the science at issue. Given this hobson's choice, the court finds the '109 patent invalid for lack of written description and enters judgment in favor of Illumina.

C. Anticipation and Obviousness

Each of the remaining invalidity issues before the court hinge on a central issue: whether Illumina's asserted prior art (PCT International Publication Number WO 03/060589 ("Osborne"); U.S. Patent No. 6,420,169 ("Read"); or U.S. Patent No. 4,715,708 ("Ito")) each disclose the "flow cell" claimed in the '109 patent. In relevant part, Osborne discloses a "microscope slide or similar body." (D.I. 270, ex. X) While Illumina asserts that this is synonymous with a flow cell, Auger agreed that microscope slides and flow cells are optically, but not functionally, identical. (*Id.*, ex. D at 94:16-95:18) Weiss opines that the incorporation of a "flow cell" into the "step and repeat" process of the '109 patent was not obvious and, in fact, "absolutely central" to the focusing issues that the invention sought to solve. (D.I. 297, ex. A at ¶ 75)

Illumina also argues that Ito discloses an optical system for viewing a sample in a "flow cell." (D.I. 270, ex. GG) According to Weiss, Ito "is directed to an optical system for detecting a focusing state in a flow cell in a flow cytometer," or an apparatus for analyzing particles in a stream of liquid. (D.I. 297, ex. A at ¶ 132) Further, "the flow cells discussed for use in flow cytometry in [Ito] are not within the meaning of flow cells as used in claim 1 of the '109 patent." (*Id.* at ¶¶ 133-34)

'109 patent may ultimately be nonenabled for the same reasons discussed with respect to written description, neither party focused its efforts on enablement (as a separate requirement) at this stage.

Neither party asked the court to construe the "flow cell" limitation. Given the dispute at bar, the court will require the parties to construe "flow cell" in a supplemental paper limited to five pages in length, with citations to the record. The court withholds judgment on these § 102/103 issues at this time.

Read incorporates by reference U.S. Patent No. 5,546,839 ("Dower II"), which (Illumina asserts) discloses a flow cell. The threshold issue presented here is whether and to what extent Read incorporates by reference Dower II, which is a question of law. *See Advanced Display Sys., Inc. v. Kent State Univ.*, 212 F.3d 1272, 1283 (Fed. Cir. 2000). The relevant language in Read is as follows: "This application [i]s also related to the following U.S. Applications, all of which are incorporated herein by reference for all purposes . . . ." (D.I. 270, ex. EE at col. 1:18-20) The Federal Circuit has made clear, however, that

> [t]o incorporate matter by reference, a host document must contain language clearly identifying the subject matter which is incorporated and where it is to be found; a mere reference to another application, or patent, or publication is not an incorporation of anything therein[.] Put differently, the host document must identify with detailed particularity what specific material it incorporates and clearly indicate where that material is found in the various documents.

Callaway Golf Co. v. Acushnet Co., 576 F.3d 1331, 1346 (Fed. Cir. 2009) (internal quotations and citations omitted). Thus, Read cannot anticipate the asserted claims.

Auger asserts that Read and Bower II render the asserted claims of the '109 patent obvious (D.I. 269, ex. S at ¶ 17); Weiss opines that Read does not render the asserted claims obvious (D.I. 297, ex. A at ¶¶ 306-09). While Weiss did not address Read with Bower II in the cited portion of his report, the court declines to find the '109 patent invalid as obvious on this record. Put another way, to the extent the parties have

addressed obviousness in view of Read and Bower II, it appears that genuine issues of material fact remain.

C. Infringement

The parties have filed cross-motions for summary judgment on the issue of infringement of the '109 patent. (D.I. 272; D.I. 291) The court need not delve into a thorough explanation of the principles of infringement or the accused Illumina products, insofar as the record does not sufficiently address infringement under the court's now-adopted construction of the "focusing light source operating with any one of the analytical light sources to focus the optical instrument on the sample" limitation. In its opening brief, Helicos argues that Illumina's products infringe because the accused products have "a third laser that is used to achieve focus on the sample," that is, "by adjusting the distance between the objective and the sample in the Z direction." (D.I. 274 at 27) (citations omitted) In certain products, the analytical and focusing light sources operate in alternative cycles; in others, they operate simultaneously. (*Id.* at 27-28) Notwithstanding, Illumina asserts that there is no dispute that "the asserted focusing light source and the focusing function in the accused Illumina products are completely independent of the analytical light sources." (D.I. 292 at 28) Thus, the parties have focused on the construction of "operating with" as a phrase independent of the limitation as a whole.

Because the court takes up claim construction and summary judgment simultaneously, and neither party advocated for the construction ultimately adopted by the court, the parties' summary judgment arguments are not framed in terms of the

focusing light source's effect on the optical path of the analytical light beam. Consequently, the court denies both motions.

At this juncture, however, the court addresses two additional issues presented on the summary judgment record. The first is Illumina's argument that it should be granted summary judgment of noninfringement by its current products (made after about June 2010) because they "use a different focusing system than the focusing system accused of infringement in this case." (D.I. 292 at 25) In its responsive papers, Helicos has responded to Illumina's claim of confusion about the accused products and has outlined those products it intends to prove infringe the '109 patent at trial. (D.I. 319 at 10-12) The court does not grant Illumina's motion as it pertains to new products, insofar as Helicos has presumably alleviated any confusion as to the claims going to trial.

Secondly, Illumina argues that it cannot infringe the '109 patent because its products: (1) view a flourophore temporarily attached to the sample, not the sample itself; or (2) view an aggregate signal of a cluster of flourophores. (D.I. 292 at 39-44) The parties did not seek the court's construction of the term "sample" as it appears in the '109 patent claims. Rather, Illumina asserted that the phrase "an optical instrument for viewing the sample in the flow cell" should be construed to mean "[a]n optical instrument, separate from the lighting system, that contains components for viewing the sample in the flow cell." (D.I. 250 at 6)

In order to further illuminate the issues at bar, the court shall require the parties to construe the term "sample" and, in so doing, provide support for their positions that a "sample" does or does not include the label attached to it. Given that summary

judgment of infringement or noninfringement is precluded for other reasons, court need not further address this issue.

V. CONCLUSION

For the aforementioned reasons, the court denies Helicos's motion for summary judgment of infringement (D.I. 272); denies Illumina's motion for summary judgment of noninfringement (D.I. 291); and denies Illumina's motion to strike Weiss's opinions (D.I. 310). The court grants Illumina's motion for summary judgment of invalidity based on inadequate written description, and denies Illumina's motion for summary judgment of invalidity on the basis of anticipation by Read. (D.I. 266) The court will take up the remaining issues following supplemental briefing. An appropriate order shall issue.