IN THE UNITED STATES DISTRICT COURT
FOR THE DISTRICT OF DELAWARE

LG ELECTRONICS U.S.A., INC. and LG ELECTRONICS, INC., Plaintiffs, v. WHIRLPOOL CORPORATION, Defendant.	C. A. No. 08-234 (GMS) Jury Trial Demanded
WHIRLPOOL CORPORATION, WHIRLPOOL PATENTS COMPANY, WHIRLPOOL MANUFACTURING CORPORATION, and MAYTAG CORPORATION, Counterclaim Plaintiffs, v. LG ELECTRONICS U.S.A., INC., LG ELECTRONICS, INC., and LG ELECTRONICS MONTERREY MEXICO, S.A., DE, CV, Counterclaim Defendants.	

WHIRLPOOL CORPORATION'S FIRST AMENDED ANSWER AND AFFIRMATIVE DEFENSES TO THE COMPLAINT AND COUNTERCLAIMS THERETO

Defendant, Whirlpool Corporation ("Whirlpool"), files this Answer and Affirmative Defenses to the Complaint of Plaintiffs LG Electronics U.S.A., Inc. and LG Electronics, Inc., ("Plaintiffs"), and Whirlpool, Whirlpool Patents Company ("WPC"), Whirlpool Manufacturing Corporation ("WMC"), and Maytag Corporation ("Maytag") (collectively

"Counterclaim Plaintiffs") file the following counterclaims appended hereto against Plaintiffs and LG Electronics Monterrey Mexico S.A., DE, CV (collectively "Counterclaim Defendants"):

NATURE OF THE ACTION

1. Whirlpool admits that the Complaint purports to be an action under the patent laws of the United States and denies the remaining allegations of Paragraph 1 of the Complaint.

PARTIES

2. Whirlpool admits that LG USA has a principal place of business at 1000 Sylvan Avenue, Englewood Cliffs, New Jersey 07632. Whirlpool is without sufficient knowledge or information either to admit or deny the remaining allegations of Paragraph 2 of the Complaint and, on that basis, denies the remaining allegations of Paragraph 2 of the Complaint.

3. Whirlpool admits that LG has a principal place of business at LG Towers, 20 Yoido-dong, Yeongdeungpo-gu, Seoul, Korea 150-721. Whirlpool is without sufficient knowledge or information either to admit or deny the remaining allegations of Paragraph 3 of the Complaint and, on that basis, denies the remaining allegations of Paragraph 3 of the Complaint.

4. Whirlpool is without sufficient knowledge or information either to admit or deny the allegations of Paragraph 4 of the Complaint and, on that basis, denies the allegations of Paragraph 4 of the Complaint.

5. Whirlpool admits the allegations in Paragraph 5 of the Complaint.

JURISDICTION AND VENUE

6. Whirlpool admits the allegations in Paragraph 6 of the Complaint.

7. Whirlpool admits the allegations in Paragraph 7 of the Complaint.

8. Whirlpool admits the allegations in Paragraph 8 of the Complaint.

COUNT ONE: INFRINGEMENT OF U.S. PATENT NO. 7,316,121

9. Whirlpool incorporates by reference, as if set forth fully herein, its responses in Paragraphs 1 through 8 of this Answer to each and every allegation set forth in Paragraphs 1 through 8 of the Complaint.

10. Whirlpool admits that U.S. Patent No. 7,316,121 ("the '121 patent") is entitled "Dispenser of Icemaker in Refrigerator" and lists January 8, 2008 as the issue date. Whirlpool admits that Plaintiffs purport to have attached a copy of the '121 patent as Exhibit A. Whirlpool is without sufficient knowledge or information either to admit or deny the remaining allegations of Paragraph 10 of the Complaint and, on that basis, denies the remaining allegations of Paragraph 10 of the Complaint.

11. Whirlpool is without sufficient knowledge or information either to admit or deny the allegations of Paragraph 11 of the Complaint and, on that basis, denies the allegations of Paragraph 11 of the Complaint.

12. Whirlpool admits that it has made, used, sold and/or offered for sale Whirlpool-branded refrigerator model nos. GC5NHAXS, GF6NFEXT, GD5VVAXT, GS6NBEXR, GS6NVEXS, and GD5NVAXS. Whirlpool denies the remaining allegations of Paragraph 12 of the Complaint.

13. Whirlpool denies the allegations of Paragraph 13 of the Complaint.

14. Whirlpool denies the allegations of Paragraph 14 of the Complaint.

15. Whirlpool denies the allegations of Paragraph 15 of the Complaint.

16. Whirlpool denies the allegations of Paragraph 16 of the Complaint.

COUNT TWO: INFRINGEMENT OF U.S. PATENT NO. 6,834,922

17. Whirlpool incorporates by reference, as if set forth fully herein, its responses in Paragraphs 1 through 16 of this Answer to each and every allegation set forth in Paragraphs 1 through 16 of the Complaint.

18. Whirlpool admits that U.S. Patent No. 6,834,922 ("the '922 patent") is entitled "Vegetable Compartment in Refrigerator" and lists December 28, 2004 as the issue date. Whirlpool admits that Plaintiffs purport to have attached a copy of the '922 patent as Exhibit B. Whirlpool is without sufficient knowledge or information either to admit or deny the remaining allegations of Paragraph 18 of the Complaint and, on that basis, denies the remaining allegations of Paragraph 18 of the Complaint.

19. Whirlpool is without sufficient knowledge or information either to admit or deny the allegations of Paragraph 19 of the Complaint and, on that basis, denies the allegations of Paragraph 19 of the Complaint.

20. Whirlpool admits that it has marketed, manufactured, sold, and/or offered for sale Maytag-branded refrigerator model no. MFI2568AE.

21. Whirlpool admits that it has marketed, manufactured, sold, and/or offered for sale Amana-branded refrigerator model no. AFI2538AE.

22. Whirlpool admits that it has marketed, manufactured, sold, and/or offered for sale KitchenAid-branded refrigerator model no. KBFS20ETSS.

23. Whirlpool admits that it has marketed, manufactured, sold, and/or offered for sale Jenn-Air-branded refrigerator model no. JFI2089AEP.

24. Whirlpool admits that it has made, used, sold, and/or offered for sale Whirlpool branded model nos. GX5FHDXT and GC5NHAXS, Maytag branded model no.

MFI2568AE, Amana branded model no. AFI2538AE, KitchenAid branded model no. KBFS20ETSS, and Jenn-Air branded model no. JFI2089AEP. Whirlpool denies the remaining allegations of Paragraph 24 of the Complaint.

25. Whirlpool denies the allegations of Paragraph 25 of the Complaint.

26. Whirlpool denies the allegations of Paragraph 26 of the Complaint.

27. Whirlpool denies the allegations of Paragraph 27 of the Complaint.

28. Whirlpool denies the allegations of Paragraph 28 of the Complaint.

COUNT THREE: INFRINGEMENT OF U.S. PATENT NO. 7,147,292

29. Whirlpool incorporates by reference, as if set forth fully herein, its responses in Paragraphs 1 through 28 of this Answer to each and every allegation set forth in Paragraphs 1 through 28 of the Complaint.

30. Whirlpool admits that U.S. Patent No. 7,147,292 ("the '292 patent") is entitled "Obturator for Refrigerator" and lists December 12, 2006 as the issue date. Whirlpool admits that Plaintiffs purport to have attached a copy of the '292 patent as Exhibit C. Whirlpool is without sufficient knowledge or information either to admit or deny the remaining allegations of Paragraph 30 of the Complaint and, on that basis, denies the remaining allegations of Paragraph 30 of the Complaint.

31. Whirlpool is without sufficient knowledge or information either to admit or deny the allegations of Paragraph 31 of the Complaint and, on that basis, denies the allegations of Paragraph 31 of the Complaint.

32. Whirlpool admits that it has marketed, manufactured, sold, and/or offered for sale Maytag-branded refrigerator model no. MFI2568AE.

33. Whirlpool admits that it has made, used, sold, and/or offered for sale Maytag-branded refrigerator model no. MFI2568AE. Whirlpool denies the remaining allegations of Paragraph 33 of the Complaint.

34. Whirlpool denies the allegations of Paragraph 34 of the Complaint.

35. Whirlpool denies the allegations of Paragraph 35 of the Complaint.

36. Whirlpool denies the allegations of Paragraph 36 of the Complaint.

37. Whirlpool denies the allegations of Paragraph 37 of the Complaint.

38. Any allegations in Paragraphs 1-37 that are not specifically admitted by Whirlpool are hereby denied.

39. Whirlpool denies that Plaintiffs are entitled to any of the relief requested in the Complaint.

AFFIRMATIVE DEFENSES

Without admitting or acknowledging that Whirlpool bears the burden of proof as to any of the following affirmative defenses, based upon information and belief, Whirlpool asserts the following affirmative defenses:

FIRST AFFIRMATIVE DEFENSE (NON-INFRINGEMENT)

40. Whirlpool does not infringe, has not infringed, and does not and has not induced infringement or contributed to the infringement of any valid and enforceable claim of the '121 patent, the '922 patent, or the '292 patent, either literally or under the doctrine of equivalents.

SECOND AFFIRMATIVE DEFENSE (FAILURE TO STATE A CLAIM)

41. Plaintiffs have failed to state a claim upon which relief can be granted.

THIRD AFFIRMATIVE DEFENSE
(INVALIDITY)

42. The one or more claims asserted by Plaintiffs of the '121 patent, the '922 patent, and the '292 patent are invalid under one or more provisions of 35 U.S.C. §§ 102, 103, and/or 112.

FOURTH AFFIRMATIVE DEFENSE
(FAILURE TO MARK)

43. On information and belief, Plaintiffs have failed to mark any refrigerator with any of the '121 patent, '922 patent or '292 patent numbers and have otherwise failed to comply with the marking and/or notice requirements set forth in 35 U.S.C. § 287. Plaintiffs are therefore barred from recovering any damages for any period prior to the filing of the Complaint.

COUNTERCLAIMS

Counterclaim Plaintiffs Whirlpool Corporation, Whirlpool Patents Company, Whirlpool Manufacturing Corporation, and Maytag Corporation allege the following counterclaims against Counterclaim Defendants LG Electronics, Inc., LG Electronics, U.S.A., Inc., and LG Electronics Monterrey Mexico, S.A., DE, CV (collectively "Counterclaim Defendants"):

THE PARTIES

44. Counterclaim Plaintiff Whirlpool Corporation is a Delaware corporation having its principal place of business at 2000 North M-63, Benton Harbor, Michigan 49022.

45. Counterclaim Plaintiff Whirlpool Patents Company is a Michigan corporation having its principal place of business at 500 Renaissance Drive, Suite 102, St. Joseph, Michigan 49085. Whirlpool Patents Company is a wholly owned subsidiary of Counterclaim Plaintiff Whirlpool Corporation.

46. Counterclaim Plaintiff Whirlpool Manufacturing Corporation is a Michigan corporation having its principal place of business at 500 Renaissance Drive, Suite 102, St. Joseph, Michigan 49085. Whirlpool Manufacturing Corporation is a wholly owned subsidiary of Counterclaim Plaintiff Whirlpool Corporation.

47. Counterclaim Plaintiff Maytag Corporation is a Delaware corporation having its principal place of business at 2000 North M-63, Benton Harbor, Michigan 49022. Maytag is a wholly owned subsidiary of Counterclaim Plaintiff Whirlpool Corporation.

48. In its Complaint, Counterclaim Defendant LG Electronics U.S.A., Inc. has alleged that it is a Delaware corporation having its principal place of business at 1000 Sylvan Avenue, Englewood Cliffs, New Jersey 07632.

49. In its Complaint, Counterclaim Defendant LG Electronics, Inc. has alleged that it is a Korean corporation having its principal place of business at LG Twin Towers, 20 Yoido-dong, Yeongdeungpo-gu, Seoul, Korea 150-721. Counterclaim Defendants have also alleged that LG Electronics U.S.A., Inc. is a wholly owned subsidiary of LG Electronics, Inc.

50. On information and belief, Counterclaim Defendant LG Electronics Monterrey Mexico, S.A., DE, CV is a Mexican corporation having its principal place of business at Av. Industrias 180, Fracc Industrial Pimsa Ote., 66603 Apodaca, Nuevo Leon, Mexico.

JURISDICTION AND VENUE

51. These counterclaims arise under the patent laws of the United States, 35 U.S.C. §§ 1 *et seq.*, and the Federal Declaratory Judgment Act, 28 U.S.C. §§ 2201 and 2202. This Court has subject matter jurisdiction pursuant to 28 U.S.C. §§ 1331 and 1338(a).

52. By its Complaint, LG Electronics, Inc. has alleged that it is the owner of all rights, title and interest in and to the '121 patent, the '922 patent and the '292 patent. Plaintiffs

have alleged that Whirlpool has infringed and continues to infringe the '121 patent, the '922 patent and the '292 patent. Plaintiffs have also alleged that Whirlpool has committed acts of indirect infringement by contributorily infringing and inducing others to infringe the '121 patent, the '922 patent and the '292 patent.

53. By filing this Complaint and alleging infringement on the part of Whirlpool, Plaintiffs have created a reasonable apprehension on the part of Whirlpool that Plaintiffs will maintain this lawsuit against Whirlpool or will initiate additional lawsuits against Whirlpool for infringement of the '121 patent, the '922 patent and the '292 patent, and such apprehension will persist even if Plaintiffs were subsequently to dismiss this lawsuit. For these reasons, an actual controversy within this Court's jurisdiction exists under 28 U.S.C. § 2201.

54. As set forth in the Complaint and in the Answer to which this Counterclaim is appended, a justiciable controversy has arisen and exists between Whirlpool and Plaintiffs concerning the validity and scope of the '121 patent, the '922 patent and the '292 patent and Whirlpool's liability for any alleged infringement of the '121 patent, the '922 patent and the '292 patent.

55. Plaintiffs have voluntarily submitted to the jurisdiction of the United States District Court for the District of Delaware as a result of initiating the present action within this Court. Plaintiffs are subject to personal jurisdiction in this judicial district for the purposes of Counterclaim Plaintiffs' counterclaims.

56. Counterclaim Defendant LG Electronics Monterrey Mexico, S.A., DE, CV ("LG Mexico") is subject to personal jurisdiction in this judicial district, *inter alia*, because Counterclaim Defendant LG Mexico has committed and continues to commit infringing acts in

this district and/or because Counterclaim Defendant LG Mexico has placed and continues to place infringing products into the stream of commerce which are sold in this district.

57. Venue is proper in the United States District Court for the District of Delaware as to the Plaintiffs by virtue of Plaintiffs having filed their Complaint in this judicial district.

58. Venue is proper in the judicial district as to Counterclaim Defendant LG Mexico, *inter alia*, by virtue of it being subject to personal jurisdiction in this district. *See* 28 U.S.C. § 1391(c).

FIRST COUNTERCLAIM
(DECLARATORY JUDGMENT OF NON-INFRINGEMENT)

59. Whirlpool incorporates by reference as if set forth fully herein the allegations in Paragraphs 40 through 58.

60. Whirlpool's activities do not and have not constituted infringement, either directly, contributorily, or by inducement of any valid and enforceable claim of the '121 patent, the '922 patent, or the '292 patent, either literally or under the doctrine of equivalents.

61. Whirlpool is entitled to a declaration pursuant to 28 U.S.C. § 2201 stating that Whirlpool has not infringed and does not infringe, directly or indirectly, any valid and enforceable claim of any of the patents asserted against it.

SECOND COUNTERCLAIM
(DECLARATORY JUDGMENT OF INVALIDITY)

62. Whirlpool incorporates by reference as if set forth fully herein the allegations in Paragraphs 40 through 61.

63. By their Complaint, Plaintiffs allege that the '121 patent, the '922 patent, or the '292 patent are valid. Whirlpool denies these allegations and contends that one or more

claims of each of the '121 patent, the '922 patent, and the '292 patent are invalid, under 35 U.S.C. §§ 102, 103, and/or 112. Consequently, there is an actual and justiciable controversy between Whirlpool and Plaintiffs concerning the validity of the patents.

64. Whirlpool is entitled to a declaration pursuant to 28 U.S.C. § 2201 stating that one or more claims of each of the '121 patent, the '922 patent, and the '292 patent are invalid.

THIRD COUNTERCLAIM
(DECLARATORY JUDGMENT OF FAILURE TO MARK)

65. Whirlpool incorporates by reference as if set forth fully herein the allegations in Paragraphs 40 through 64.

66. On information and belief, Counterclaim Defendants failed to comply with the marking and/or notice requirements set forth in 35 U.S.C. § 287.

67. Whirlpool is entitled to a declaration pursuant to 28 U.S.C. § 2201 stating that Plaintiffs failed to comply with the marking and/or notice requirements and are therefore barred from recovering any damages for any period prior to the filing of the Complaint.

FOURTH COUNTERCLAIM
(INFRINGEMENT OF U.S. PATENT NO. 6,082,130)

68. Counterclaim Plaintiffs reallege and incorporate by reference each of Paragraphs 44 through 67 above.

69. WPC is the owner by assignment from Whirlpool of United States Patent No. 6,082,130 ("the '130 patent"), which was duly, properly, and legally issued to Whirlpool by virtue of an assignment from the inventors on July 4, 2000, for an invention entitled "Ice Delivery System for a Refrigerator." A true and correct copy of the '130 patent is attached hereto as Exhibit A.

70. WPC has licensed rights under the '130 Patent to WMC, which has in turn licensed rights under the '130 Patent to Whirlpool. Whirlpool has the right to offer for sale and sell in the United States products covered by the '130 patent.

71. On information and belief, Counterclaim Defendants have been making, using, selling, offering for sale within, and/or importing into, the United States refrigerators that come within the scope of one or more claims of the '130 patent, and have induced infringement of and/or contributorily infringed one or more claims of the '130 patent. Said refrigerators include, but are not limited to, LG model nos. LSC27950SW and LFX25980ST.

72. On information and belief, Counterclaim Defendants have been infringing the '130 patent and will continue to do so unless and until enjoined by this Court.

73. Counterclaim Defendants' acts of infringement of the '130 patent have caused Counterclaim Plaintiffs irreparable injury and damages in an as-yet-undetermined amount and, unless and until enjoined by this Court, will continue to do so.

74. On information and belief, Counterclaim Defendants' acts of infringement of the '130 patent have been and continue to be willful and deliberate, rendering this case eligible for enhanced damages under 35 U.S.C. § 284 and attorney fees under 35 U.S.C. § 285.

FIFTH COUNTERCLAIM
(INFRINGEMENT OF U.S. PATENT NO. 6,810,680)

75. Counterclaim Plaintiffs reallege and incorporate by reference each of Paragraphs 44 through 74 above.

76. On November 2, 2004, the United States Patent and Trademark Office ("USPTO") duly and legally issued U.S. Patent No. 6,810,680 ("the '680 patent"), entitled "Ice Maker Fill Tube Assembly." A true and correct copy of the '680 patent is attached hereto as Exhibit B.

77. Maytag is the owner by assignment of the '680 patent and Maytag has the right to offer for sale and sell in the United States products covered by the '680 patent.

78. On information and belief, Counterclaim Defendants have been making, using, selling, offering for sale within, and/or importing into, the United States refrigerators that come within the scope of one or more claims of the '680 patent, and have induced infringement of and/or contributorily infringed one or more claims of the '680 patent. Said refrigerators include, but are not limited to, LG model no. LSC26905SB.

79. On information and belief, Counterclaim Defendants have been infringing the '680 patent and will continue to do so unless and until enjoined by this Court.

80. Counterclaim Defendants' acts of infringement of the '680 patent have caused Counterclaim Plaintiffs irreparable injury and damages in an as-yet-undetermined amount and, unless and until enjoined by this Court, will continue to do so.

81. On information and belief, Counterclaim Defendants' acts of infringement of the '680 patent have been and continue to be willful and deliberate, rendering this case eligible for enhanced damages under 35 U.S.C. § 284 and attorney fees under 35 U.S.C. § 285.

SIXTH COUNTERCLAIM
(INFRINGEMENT OF U.S. PATENT NO. 6,915,644)

82. Counterclaim Plaintiffs reallege and incorporate by reference each of Paragraphs 44 through 81 above.

83. On July 12, 2005, the United States Patent and Trademark Office ("USPTO") duly and legally issued U.S. Patent No. 6,915,644 ("the '644 patent"), entitled "Ice Maker Fill Tube Assembly." A true and correct copy of the '644 patent is attached hereto as Exhibit C.

84. Maytag is the owner by assignment of the '644 patent and Maytag has the right to offer for sale and sell in the United States products covered by the '644 patent.

85. On information and belief, Counterclaim Defendants have been making, using, selling, offering for sale within, and/or importing into, the United States refrigerators that come within the scope of one or more claims of the '644 patent, and have induced infringement of and/or contributorily infringed one or more claims of the '644 patent. Said refrigerators include, but are not limited to, LG model no. LSC26905SB.

86. On information and belief, Counterclaim Defendants have been infringing the '644 patent and will continue to do so unless and until enjoined by this Court.

87. Counterclaim Defendants' acts of infringement of the '644 patent have caused Counterclaim Plaintiffs irreparable injury and damages in an as-yet-undetermined amount and, unless and until enjoined by this Court, will continue to do so.

88. On information and belief, Counterclaim Defendants' acts of infringement of the '644 patent have been and continue to be willful and deliberate, rendering this case eligible for enhanced damages under 35 U.S.C. § 284 and attorney fees under 35 U.S.C. § 285.

SEVENTH COUNTERCLAIM
(INFRINGEMENT OF U.S. PATENT NO. 5,269,601)

89. Counterclaim Plaintiffs reallege and incorporate by reference each of Paragraphs 44 through 88 above.

90. WPC is the owner by assignment from Whirlpool of United States Patent No. 5,269,601 ("the '601 patent"), which was duly, properly, and legally issued to Whirlpool by virtue of an assignment from the inventors on December 14, 1993, for an invention entitled "Method and Apparatus for Manufacture of Plastic Refrigerator Liners." A true and correct copy of the '601 patent is attached hereto as Exhibit D.

91. WPC has licensed rights under the '601 Patent to WMC, which has in turn licensed rights under the '601 Patent to Whirlpool. Whirlpool has the right to offer for sale and sell in the United States products covered by the '601 patent.

92. On information and belief, Counterclaim Defendants have been making, using, selling, offering for sale within, and/or importing into, the United States refrigerators that come within the scope of one or more claims of the '601 patent, and have induced infringement of and/or contributorily infringed one or more claims of the '601 patent. Said refrigerators include, but are not limited to, LG model nos. LSC26905SB and LSC27950SW.

93. On information and belief, Counterclaim Defendants have been infringing the '601 patent and will continue to do so unless and until enjoined by this Court.

94. Counterclaim Defendants' acts of infringement of the '601 patent have caused Counterclaim Plaintiffs irreparable injury and damages in an as-yet-undetermined amount and, unless and until enjoined by this Court, will continue to do so.

EIGHTH COUNTERCLAIM
(INFRINGEMENT OF U.S. PATENT NO. 5,269,154)

95. Counterclaim Plaintiffs reallege and incorporate by reference each of Paragraphs 44 through 94 above.

96. WPC is the owner by assignment from Whirlpool of United States Patent No. 5,269,154 ("the '154 patent"), which was duly, properly, and legally issued to Whirlpool by virtue of an assignment from the inventors on December 14, 1993, for an invention entitled "Heated Ice Door for Dispenser." A true and correct copy of the '154 patent is attached hereto as Exhibit E.

97. WPC has licensed rights under the '154 Patent to WMC, which has in turn licensed rights under the '154 Patent to Whirlpool Corporation. Whirlpool has the right to offer for sale and sell in the United States products covered by the '154 patent.

98. On information and belief, Counterclaim Defendants have been making, using, selling, offering for sale within, and/or importing into, the United States refrigerators that come within the scope of one or more claims of the '154 patent, and have induced infringement of and/or contributorily infringed one or more claims of the '154 patent. Said refrigerators include, but are not limited to, LG model nos. LSC27950SW and LFX25980ST.

99. On information and belief, Counterclaim Defendants have been infringing the '154 patent and will continue to do so unless and until enjoined by this Court.

100. Counterclaim Defendants' acts of infringement of the '154 patent have caused Counterclaim Plaintiffs irreparable injury and damages in an as-yet-undetermined amount and, unless and until enjoined by this Court, will continue to do so.

NINTH COUNTERCLAIM
(INFRINGEMENT OF U.S. PATENT NO. 6,997,526)

101. Counterclaim Plaintiffs reallege and incorporate by reference each of Paragraphs 44 through 100 above.

102. On February 14, 2006, the United States Patent and Trademark Office ("USPTO") duly and legally issued U.S. Patent No. 6,997,526 ("the '526 patent"), entitled "Refrigerator Door Storage Systems." A true and correct copy of the '526 patent is attached hereto as Exhibit F.

103. Maytag is the owner by assignment of the '526 patent and Maytag has the right to offer for sale and sell in the United States products covered by the '526 patent.

104. On information and belief, Counterclaim Defendants have been making, using, selling, offering for sale within, and/or importing into, the United States refrigerators that come within the scope of one or more claims of the '526 patent, and have induced infringement of and/or contributorily infringed one or more claims of the '526 patent. Said refrigerators include, but are not limited to, LG model no. LFX25980ST.

105. On information and belief, Counterclaim Defendants have been infringing the '526 patent and will continue to do so unless and until enjoined by this Court.

106. Counterclaim Defendants' acts of infringement of the '526 patent have caused Counterclaim Plaintiffs irreparable injury and damages in an as-yet-undetermined amount and, unless and until enjoined by this Court, will continue to do so.

PRAYER

WHEREFORE, Whirlpool prays for judgment that:

1. Dismiss Plaintiffs' Complaint with prejudice and order that Plaintiffs be denied all relief requested in its Complaint and take nothing;

2. Enter judgment in favor of Whirlpool and against Plaintiffs on all claims in the Complaint;

3. Enter judgment that Whirlpool has not directly infringed, contributorily infringed, or induced infringement of any valid and enforceable claim of the '121 patent, the '922 patent, or the '292 patent, and does not directly infringe, contributorily infringe, or induce infringement of any valid and enforceable claim of the '121 patent, the '922 patent, or the '292 patent;

4. Enter judgment that one or more claims of each of the '121 patent, the '922 patent, and the '292 patent, including at least those claims asserted against Whirlpool, are invalid;

5. Enter judgment that Plaintiffs have failed to satisfy the marking statute and as a consequence are not entitled to any relief prior to the filing of the Complaint;

6. Enter judgment that Counterclaim Defendants have infringed one or more claims of the '130 patent, '680 patent, '644 patent, '601 patent, '154 patent, and '526 patent;

7. Enter judgment that Counterclaim Defendants' infringement of the '130 patent, '680 patent, and '644 patent, has been deliberate and willful;

8. Permanently enjoin Counterclaim Defendants, their officers, agents, servants, employees, and attorneys, and those persons in active concert or participation with

them, from further infringement of the '130 patent, '680 patent, '644 patent, '601 patent, '154 patent, and '526 patent;

9. Enter judgment awarding Counterclaim Plaintiffs damages for Counterclaim Defendants' infringement of the '130 patent, '680 patent, '644 patent, '601 patent, '154 patent, and '526 patent;

10. Enter judgment awarding Counterclaim Plaintiffs enhanced damages up to three times their amount pursuant to 35 U.S.C. § 284;

11. Enter judgment awarding Counterclaim Plaintiffs pre- and post-judgment interest on their damages, together with all costs and expenses;

12. Enter judgment awarding Counterclaim Plaintiffs reasonable attorney fees pursuant to 35 U.S.C. § 285; and

13. Grant such other and further relief as the Court may deem just and proper.

OF COUNSEL:
Scott F. Partridge
Paul R. Morico
BAKER BOTTS L.L.P.
One Shell Plaza
910 Louisiana Street
Houston, Texas 77002
(713) 229-1569
scott.partridge@bakerbotts.com
paul.morico@bakerbotts.com

Dated: May 8, 2008

/s/ Frederick L. Cottrell, III
Frederick L. Cottrell, III (#2555)
Anne Shea Gaza (#4093)
RICHARDS, LAYTON & FINGER, P.A.
920 North King Street
One Rodney Square
Wilmington, DE 19801
(302) 651-7700
cottrell@rlf.com
gaza@rlf.com

Attorneys For Defendant And Counterclaim Plaintiff Whirlpool Corporation And Counterclaim Plaintiffs Whirlpool Patents Company, Whirlpool Manufacturing Corporation And Maytag Corporation

JURY DEMAND

Defendant and Counterclaim Plaintiff Whirlpool and Counterclaim Plaintiffs Whirlpool Patents Company, Whirlpool Manufacturing Corporation and Maytag Corporation hereby demand a trial by jury for all issues so triable.

/s/ Frederick L. Cottrell, III
Frederick L. Cottrell, III (#2555)
Anne Shea Gaza (#4093)
RICHARDS, LAYTON & FINGER, P.A.
920 North King Street
One Rodney Square
Wilmington, DE 19801
(302) 651-7700
cottrell@rlf.com
gaza@rlf.com

Attorneys For Defendant And Counterclaim Plaintiff Whirlpool Corporation And Counterclaim Plaintiffs Whirlpool Patents Company, Whirlpool Manufacturing Corporation And Maytag Corporation

OF COUNSEL:
Scott F. Partridge
Paul R. Morico
BAKER BOTTS L.L.P.
One Shell Plaza
910 Louisiana Street
Houston, Texas 77002
(713) 229-1569
scott.partridge@bakerbotts.com
paul.morico@bakerbotts.com

Dated: May 8, 2008

CERTIFICATE OF SERVICE

I hereby certify that on May 8, 2008, I caused to be served by hand delivery and electronic mail the foregoing document and electronically filed the same with the Clerk of Court using CM/ECF which will send notification of such filing(s) to the following:

Steven J. Balick
John G. Day
Tiffany Geyer Lydon
Ashby & Geddes
500 Delaware Avenue, 8th Floor
P. O. Box 1150
Wilmington, DE 19899

I hereby certify that on May 8, 2008, the foregoing document was sent via electronic mail to the following non-registered participants:

Richard L. Stroup
Andrew C. Sono
Parmanand K. Sharma
Walter D. Davis, Jr.
Finnegan, Henderson, Farabow, Garrett & Dunner, L.L.P.
901 New York Avenue, NW
Washington, DC 20001-4413

/s/ Frederick L. Cottrell, III
Frederick L. Cottrell, III (#2555)
cottrell@rlf.com

EXHIBIT A

U 7061699

THE UNITED STATES OF AMERICA

TO ALL TO WHOM THESE PRESENTS SHALL COME:

UNITED STATES DEPARTMENT OF COMMERCE
United States Patent and Trademark Office

April 06, 2007

THIS IS TO CERTIFY THAT ANNEXED HERETO IS A TRUE COPY FROM THE RECORDS OF THIS OFFICE OF:

U.S. PATENT: *6,082,130*
ISSUE DATE: *July 04, 2000*

By Authority of the
Under Secretary of Commerce for Intellectual Property
and Director of the United States Patent and Trademark Office

M. BASSFORD
Certifying Officer

US006082130A

United States Patent [19]

Pastryk et al.

[11] Patent Number: 6,082,130

[45] Date of Patent: Jul. 4, 2000

[54] **ICE DELIVERY SYSTEM FOR A REFRIGERATOR**

[75] Inventors: **Jim J. Pastryk**, New Troy; **Mark H. Nelson**, Berrien Springs; **Verne H. Myers**, St. Joseph, all of Mich.; **Daryl L. Harmon**, Newburgh, Ind.; **Andrew M. Oltman**; **Gregory G. Hortin**, both of Evansville, Ind; **Devinder Singh**, St. Joseph, Mich.

[73] Assignee: **Whirlpool Corporation**, Benton Harbor, Minn.

[21] Appl. No.: **09/221,534**

[22] Filed: **Dec. 28, 1998**

[51] **Int. Cl.**[7] **F25C 5/18**

[52] **U.S. Cl.** **62/344**; 222/146.6

[58] **Field of Search** 62/344; 222/146.6

[56] **References Cited**

U.S. PATENT DOCUMENTS

2,785,539	3/1957	Simmons et al.	62/108.5
3,025,683	3/1962	Baker et al.	62/419
3,146,601	9/1964	Gould	62/344
3,226,939	1/1966	Harbison et al.	62/344
3,545,217	12/1970	Linstromberg	62/137
3,602,007	8/1971	Drieci	62/344
3,621,668	11/1971	Swerbinsky	62/137
3,635,043	1/1972	Sterling	62/137
3,747,363	7/1973	Grimm	62/377
3,798,923	3/1974	Pink et al.	62/344
4,084,725	4/1978	Buchser	221/75
4,100,761	7/1978	Linstromberg et al.	62/137
4,176,527	12/1979	Linstromberg et al.	62/320
4,227,383	10/1980	Horvay	62/344
4,649,717	3/1987	Tate, Jr. et al.	62/240
4,756,165	7/1988	Chestnut et al.	62/135
4,942,979	7/1990	Linstromberg et al.	221/75
4,970,871	11/1990	Rudick	62/187
5,033,273	7/1991	Buchser et al.	62/344
5,050,777	9/1991	Buchser	222/146
5,160,094	11/1992	Willis et al.	62/137
5,187,950	2/1993	Weldon	62/449

Primary Examiner—William E. Tapolcai

Attorney, Agent, or Firm—Stephen D. Krefman; Joel M. Van Winkle; Robert O. Rice

[57] **ABSTRACT**

A refrigerator having a cabinet defining a freezer compartment having an access opening and a closure member for closing the access opening. An ice maker is disposed within the freezer compartment for forming ice pieces and an ice storage bin is removably mounted to the closure member below the ice maker for receiving ice from the ice maker. The ice storage bin has an upper portion which is transparent and has a bottom opening. An ice discharge chute extends through the closure member below the bottom opening of the ice storage bin. A motor is mounted on the closure member. An auger is vertically disposed within the ice storage bin and is drivingly connected to the motor. Upon energization of the motor, the auger moves ice pieces from the ice storage bin through the bottom opening to the ice discharge chute for dispensing ice pieces from the ice storage bin.

25 Claims, 7 Drawing Sheets

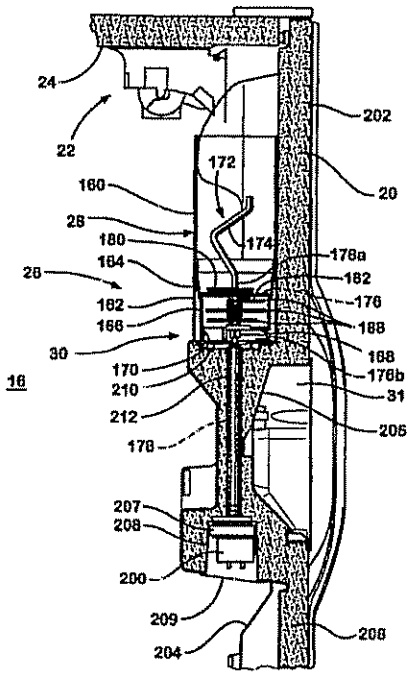

ClibPDF - www.fastio.com

Copy provided by USPTO from the PIRS Image Database on 04/06/2007

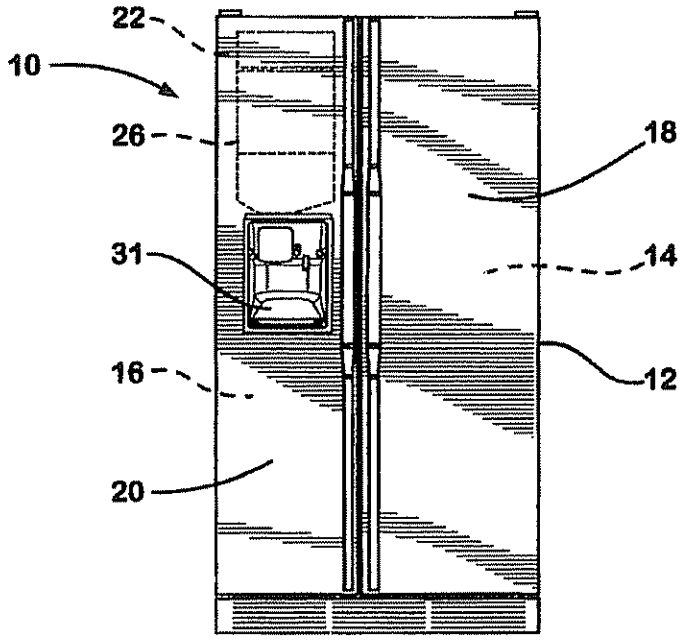

Fig. 1

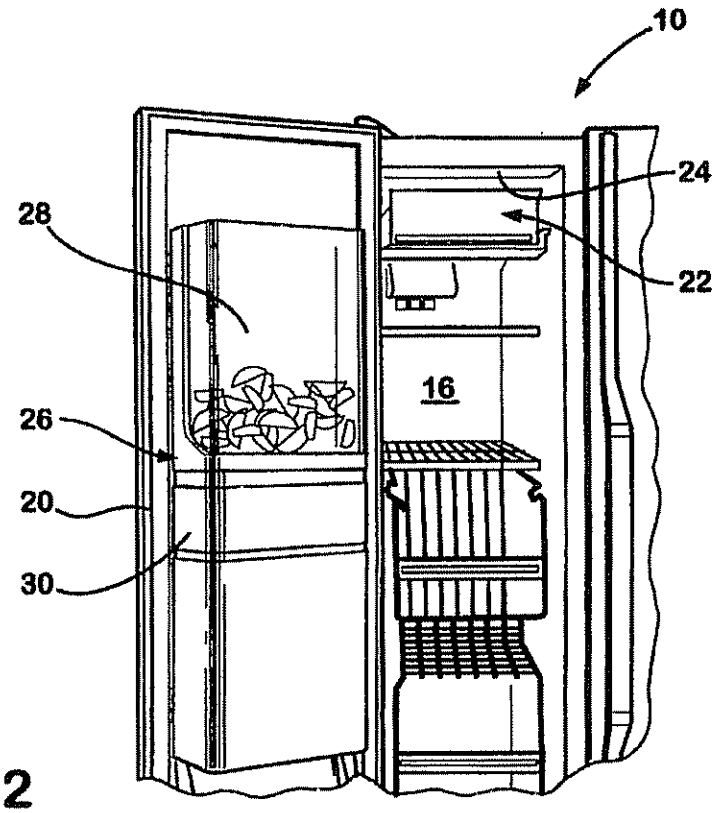

Fig. 2

ClibPDF - www.fastio.com
Copy provided by USPTO from the PIRS Image Database on 04/06/2007

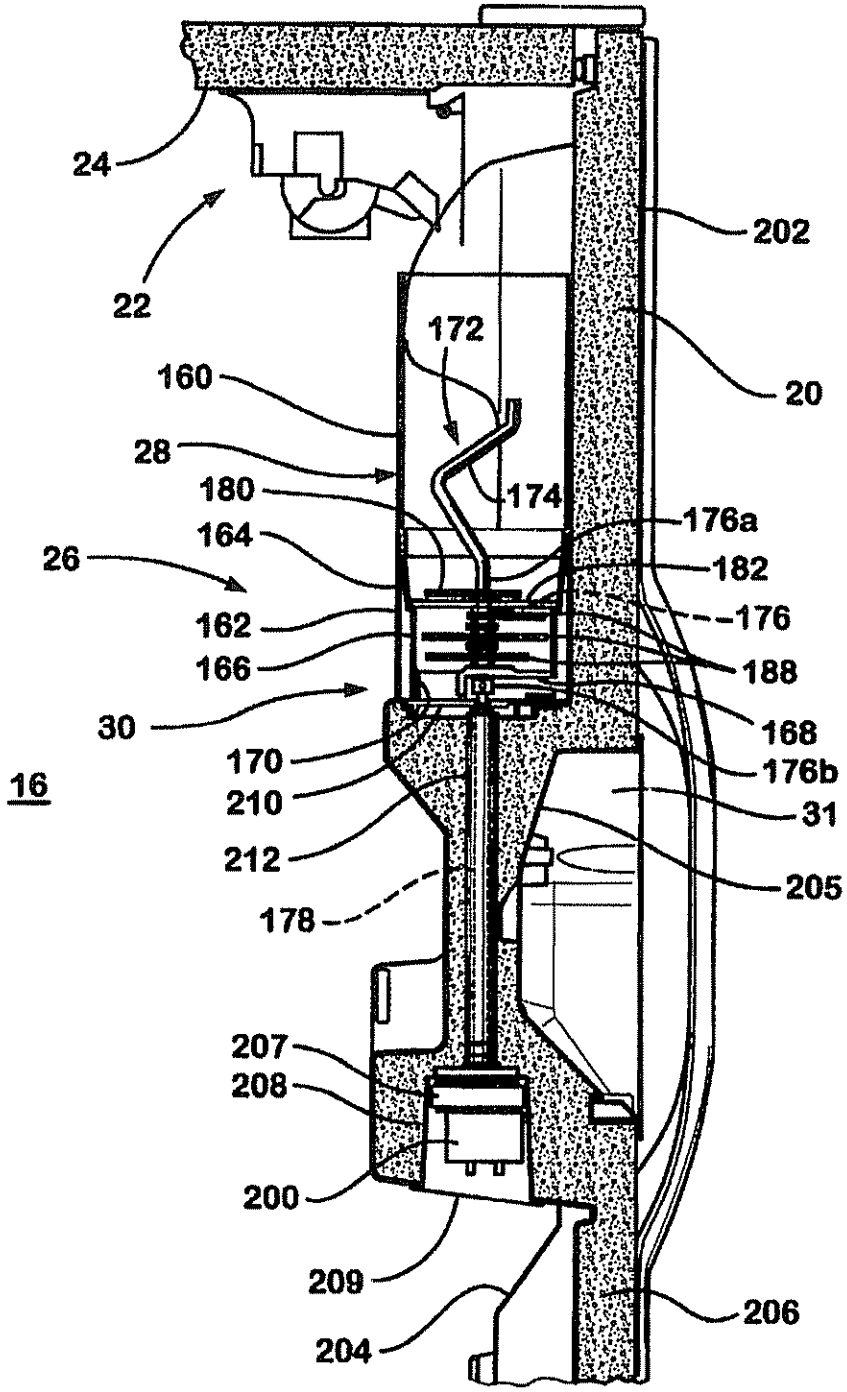

Fig. 3

ClibPDF - www.fastio.com
Copy provided by USPTO from the PIRS Image Database on 04/06/2007

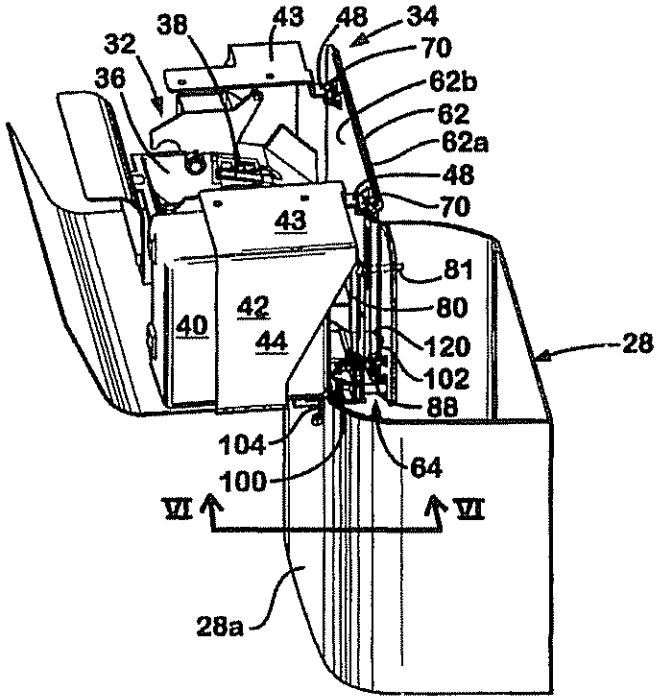

Fig. 4

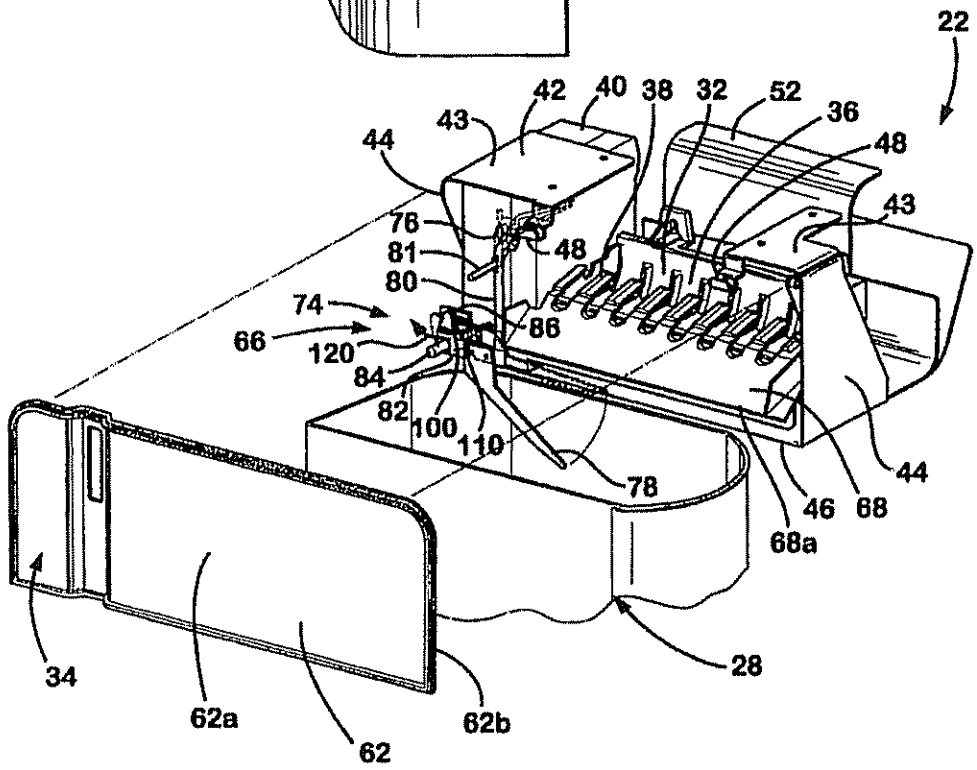

Fig. 5

ClibPDF - www.fastio.com
Copy provided by USPTO from the PIRS Image Database on 04/06/2007

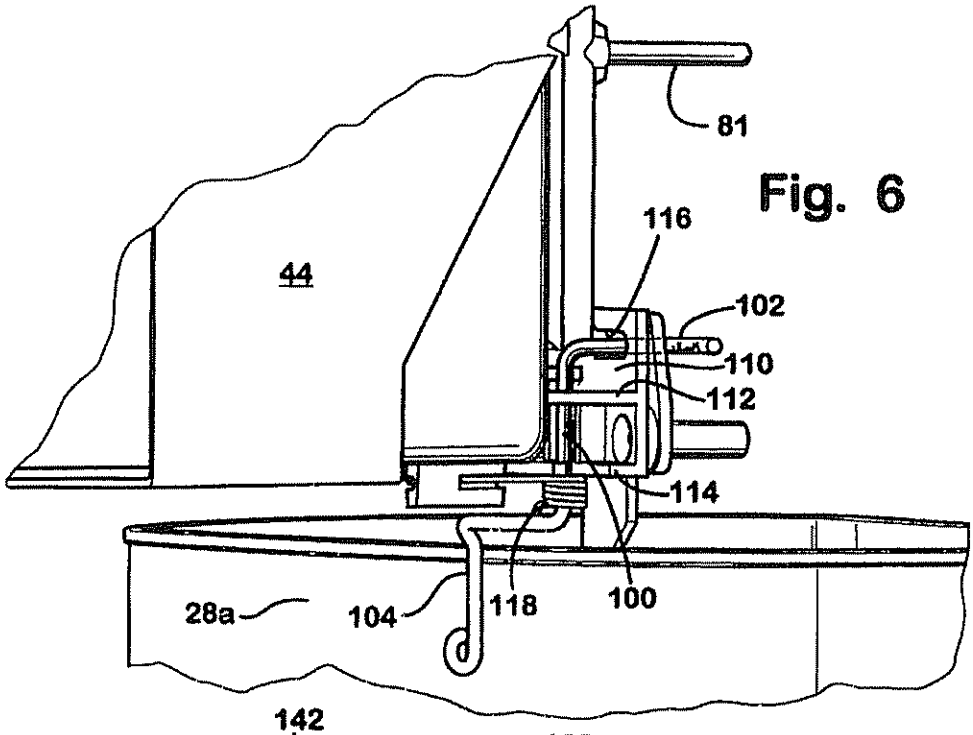

Fig. 6

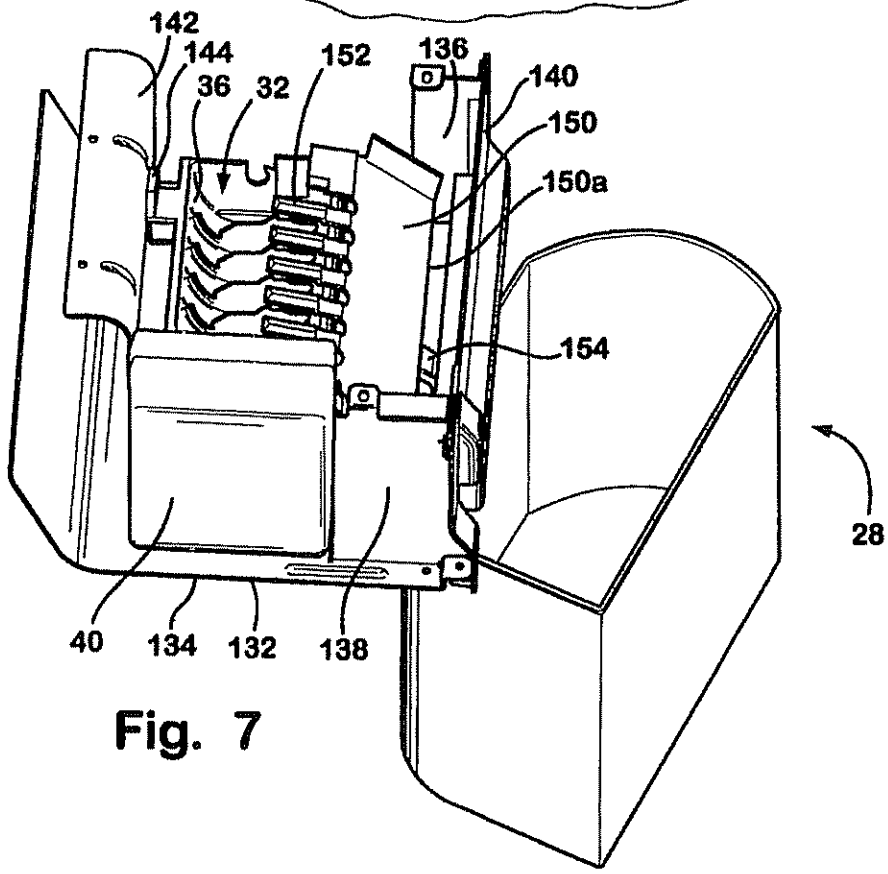

Fig. 7

ClibPDF - www.fastio.com
Copy provided by USPTO from the PIRS Image Database on 04/06/2007

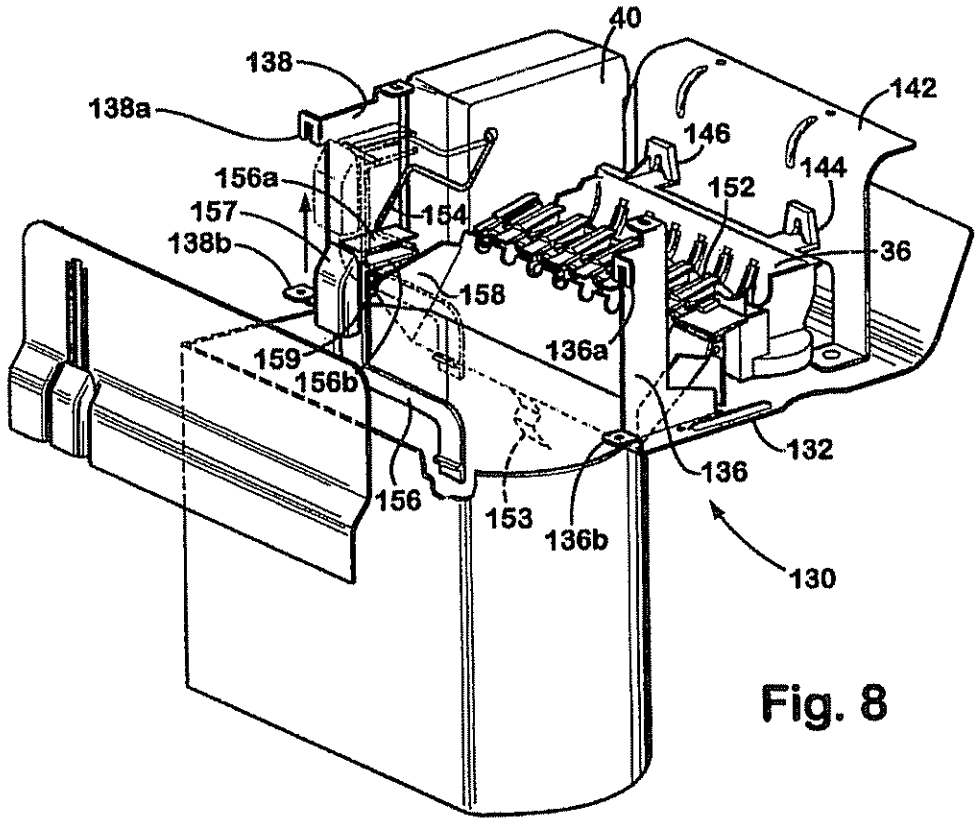

Fig. 8

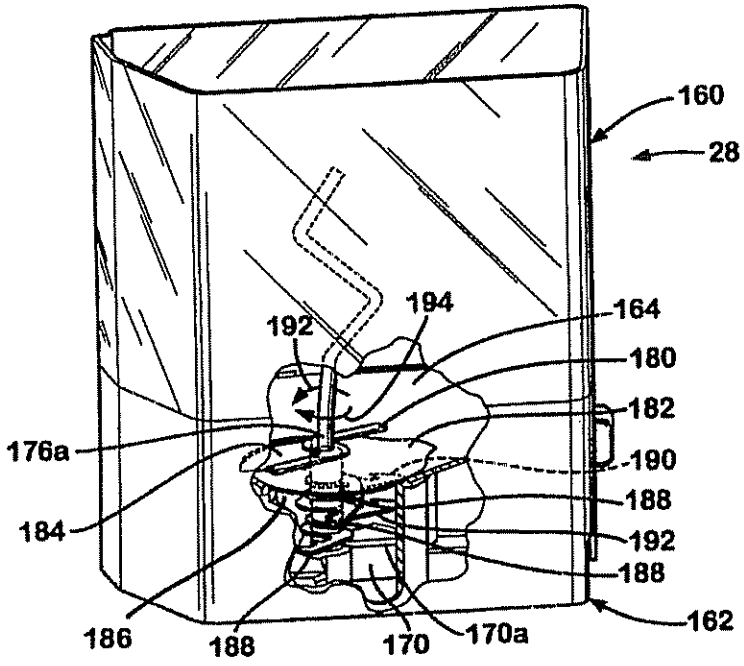

Fig. 9

ClibPDF - www.fastio.com
Copy provided by USPTO from the PIRS Image Database on 04/06/2007

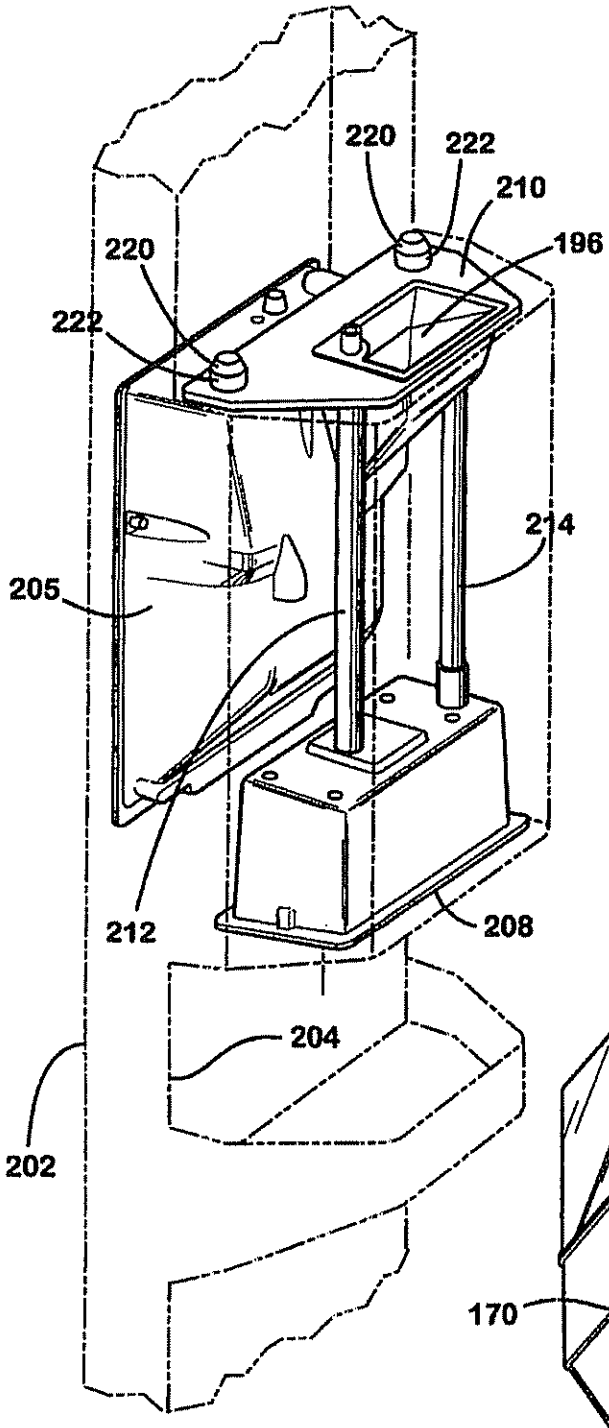

Fig. 10

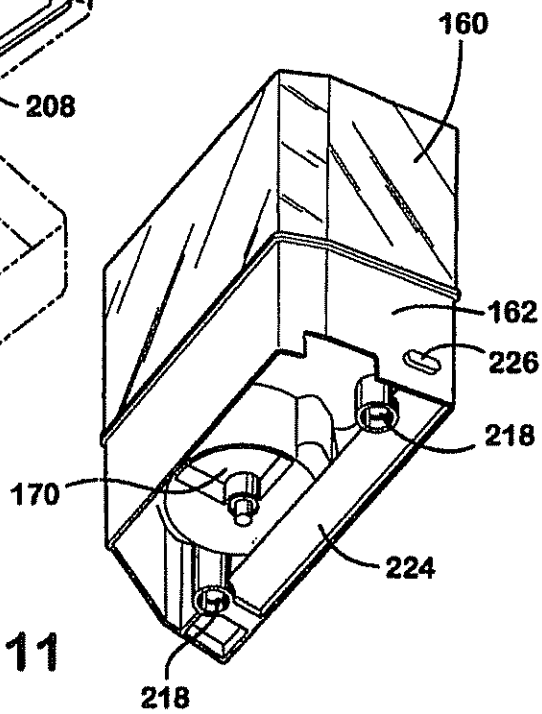

Fig. 11

ClibPDF - www.fastio.com
Copy provided by USPTO from the PIRS Image Database on 04/06/2007

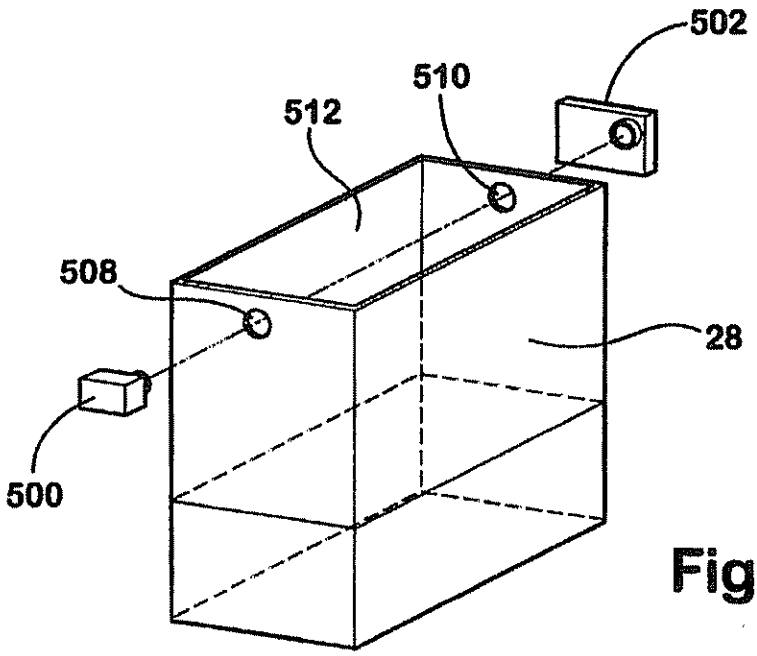

Fig. 12

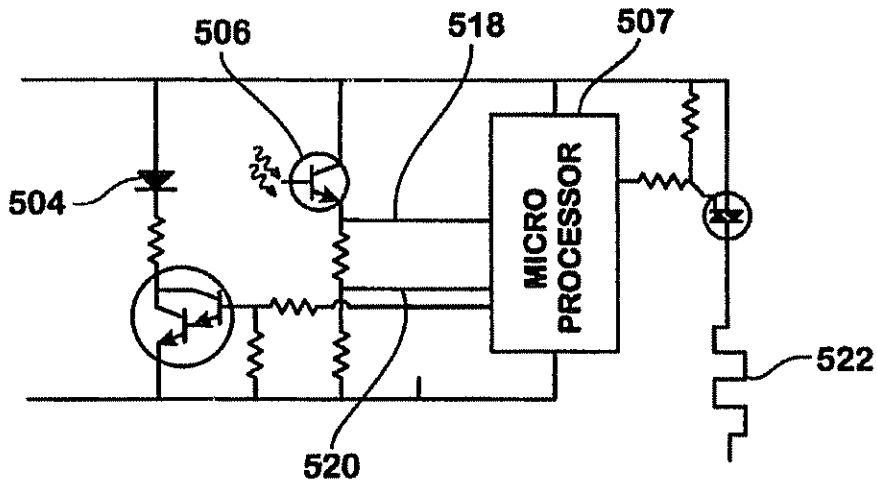

Fig. 13

ClibPDF - www.fastio.com
Copy provided by USPTO from the PIRS Image Database on 04/06/2007

ICE DELIVERY SYSTEM FOR A REFRIGERATOR

BACKGROUND OF THE INVENTION

1. Field of the Invention

The invention relates to an ice making system for a refrigerator and more particularly to an ice delivery system mounted to a refrigerator closure member or door.

2. Description of Related Art

Automatic ice making systems for use in a home refrigerator are well known. Typically, ice making systems include an ice maker mounted within the freezer compartment of the refrigerator and an ice storage receptacle or bin supported beneath the ice maker for receiving the formed ice from the ice maker. The ice maker is commonly mounted within the freezer compartment adjacent the side or rear wall of the freezer compartment such that water and power can be readily supplied to the ice maker. The ice storage receptacle is generally supported by a shelf structure beneath the ice maker within the freezer compartment. U.S. Pat. No. 4,942,979, to Linstromberg et al. is an example of a prior art ice making system.

Ice making systems may also include ice delivery systems for automatically delivering ice pieces or bodies from the ice storage bin to a dispensing position or space provided on the external surface of the refrigerator. Conveying means, conventionally in the form of horizontally arranged augers disposed within the ice storage receptacle, have been used for transferring ice pieces from the ice storage bin through an opening provided in the freezer compartment door such that ice pieces may be automatically dispensed.

Illustratively, U.S. Pat. No. 4,084,725, to Buchser, discloses an ice dispensing apparatus for use in a domestic refrigerator having an ice maker and an ice storage receptacle mounted within a freezer compartment. The ice storage receptacle extends across the freezer compartment and has a front end adjacent the freezer door. As illustrated, a wire auger is horizontally positioned within the bottom of the ice storage receptacle and is selectively rotated by a motor when ice dispensing is desired. Ice cubes are delivered from the storage receptacle to an external service area in the freezer door by means of a rotatable tubular drum having an internal helical auger blade. The tubular drum is mounted to the end of the wire auger. When the wire auger and tubular drum are rotated, ice pieces are moved horizontally forward in the ice storage receptacle to fall into a chute for passing the ice pieces through the freezer door to the service area.

Another ice dispensing apparatus is illustrated in U.S. Pat. No. 4,176,527, to Linstromberg et al., which discloses an ice dispensing apparatus for use in a domestic refrigerator having an ice maker and an ice storage receptacle wherein ice pieces are delivered by a delivery means from the ice storage receptacle to an external service area either in the form of crushed ice or integral whole ice pieces. As shown, the ice maker and ice storage receptacle are mounted within the freezer compartment of the refrigerator. The ice storage receptacle extends across the freezer compartment and has a front end adjacent the freezer door. The transfer means comprises a rotatable wire auger horizontally disposed within the bottom of the ice storage receptacle. The wire auger has mounted at its distal end an auger blade. A motor is supported along the back wall of the freezer compartment and is drivingly connected to the wire auger. When the motor is energized, the wire auger conveys ice pieces horizontally forward toward the auger blade such that ice pieces are supplied into a delivery chute wherein ice pieces are passed through the freezer door to the external service area. An ice crushing system may be selectively engaged such that the ice pieces may be crushed prior to delivery to the chute.

As can be seen in all of the above mentioned patent references, one aspect of conventional ice making and dispensing systems is that they occupy a relatively large amount of freezer shelf space. In particular, the ice storage bin extends across the freezer compartment and occupies a large amount of freezer compartment space. This is perceived as a disadvantage by many consumers who generally prefer to have more available shelf space. Accordingly, it would be an improvement to provide an ice making system which occupied less freezer shelf space.

Another disadvantage of prior art ice making and delivery systems is that a relatively large motor is required to rotate the ice conveying auger which is commonly provided. The motor size is related to the force necessary to break up frozen ice and move ice pieces horizontally forward within the ice receptacle.

Another disadvantage of the prior art is that the amount of ice in the ice storage receptacle is not readily visually apparent. Moreover, conventional ice making systems having automatic ice dispensing systems do not allow for easy removal of the ice storage receptacle and bulk removal of ice pieces.

SUMMARY OF THE INVENTION

Accordingly, the present invention is directed to a refrigerator having a cabinet defining a freezer compartment having an access opening and a closure member for closing the access opening. An ice maker is disposed within the freezer compartment for forming ice pieces and an ice storage bin is removably mounted to the closure member below the ice maker for receiving ice from the ice maker. The ice storage bin has an upper portion which is transparent and has a bottom opening. An ice discharge chute extends through the closure member below the bottom opening of the ice storage bin. A motor is mounted on the closure member. An auger is vertically disposed within the ice storage bin and is drivingly connected to the motor. Upon energization of the motor, the auger moves ice pieces from the ice storage bin through the bottom opening to the ice discharge chute for dispensing ice pieces from the ice storage bin.

The ice storage bin may define an ice crushing region through which the ice pieces must pass when ice pieces are discharged through the bottom opening. The ice crushing region has an inlet opening. The auger has a shaft portion passing through the ice crushing region. At least one ice crusher blade is rotatably connected to the shaft portion for rotation within the ice crushing region. At least one stationary blade is mounted within the ice crushing region such that the ice crusher blade rotates past the stationary blade. When the motor is rotated in a first direction the ice pieces are crushed by the ice crusher blade and stationary blade prior to being dispensed through the chute and when the motor is rotated in a second direction whole ice pieces are dispensed through the ice chute.

The closure member of the present invention is a door including an inner liner, a outer wrapper and a foam material therebetween. A mounting plate is connected to the inner liner. The ice discharge chute extends through the door adjacent the mounting plate. A cup shaped support member is connected to the inner liner below the mounting plate. The ice storage bin is removably mounted to the mounting plate for receiving ice pieces. The motor is supported by the

ClibPDF - www.fastio.com

Copy provided by USPTO from the PIRS Image Database on 04/06/2007

support member below the ice storage bin and the motor drive shaft extends from the support member to the mounting plate. The foam material is added to the door after the inner liner, outer wrapper, mounting plate and support member have been assembled such that the foam bonds to these components and secures them into position

BRIEF DESCRIPTION OF THE DRAWINGS

FIG. **1** is a front view of a refrigerator apparatus having an ice storing and dispensing system embodying the present invention;

FIG. **2** is a fragmentary perspective view illustrating the ice storing and dispensing system within the freezer compartment of the refrigerator apparatus with the freezer door open;

FIG. **3** is a fragmentary, side sectional view of the ice storing and dispensing system of FIG **1**;

FIG. **4** is a fragmentary, perspective view of a first embodiment of the ice storage and dispensing system of the present invention;

FIG. **5** is a fragmentary, perspective view of the first embodiment of the ice storage and dispensing system of the present invention wherein the front cover of the ice maker has been removed;

FIG. **6** is a fragmentary, enlarged perspective view of the first embodiment of the ice storage and dispensing system of the present invention wherein the front cover has been removed, illustrating the bin lever and associated components;

FIG. **7** is a fragmentary, perspective view of a second embodiment of the ice storage and dispensing system of the present invention, illustrating the freezer door partially open;

FIG. **8** is a fragmentary, perspective view of the second embodiment of the ice storage and dispensing system of the present invention wherein the front cover has been removed, illustrating the freezer door in a closed position;

FIG. **9** is a fragmentary, enlarged, perspective view of the ice storage bin with a cut away portion illustrating the ice crusher assembly;

FIG. **10** is an enlarged, perspective view of the components of the ice storage and dispensing system of the present invention which are mounted to the freezer door wherein the freezer door liner, wrapper and insulation have been removed; and

FIG. **11** is an enlarged, perspective view of the bottom of the ice storage bin of the ice storage and dispensing system of the present invention

FIG. **12** is a simplified, elevational view of the ice storage bin and the optical ice level sensing system.

FIG. **13** is a schematic electrical diagram illustrating the circuitry of the optical ice level sensing system of FIG. **12**.

DESCRIPTION OF THE PREFERRED EMBODIMENTS

In the illustrative embodiment of the invention as shown in FIGS. **1–3**, a refrigerator **10**, comprising a side-by-side fresh food/freezer configuration, is provided having a cabinet **12** forming an above freezing fresh food compartment **14** and a below freezing freezer compartment **16**. Both the fresh food compartment **14** and the freezer compartment **16** are provided with access openings. A fresh food closure member or door **18** and a freezer closure member or door **20** are hingedly mounted to the cabinet **12** for closing the access openings, as is well known.

An ice making assembly **22** is disposed within the freezer compartment **16**. The ice making assembly **22** is mounted to the inside surface of the top wall **24** of the freezer compartment **16**. An ice dispensing system **26**, mounted to the freezer door **20**, is provided below the ice making assembly **22** for receiving ice pieces therefrom. The ice dispensing system **26** includes an ice storage receptacle or bin **28** having an ice crushing system **30**. When operated, the ice dispensing system **26** transfers ice pieces from the bin **28** through the freezer door **20** whereby ice pieces may be dispensed through a conventional, forwardly exposed ice dispenser station or external ice service area **31**.

A first embodiment of the ice making assembly **22** can be described in greater detail by referring now to FIGS. **4** and **5**. The ice maker assembly **22** generally comprises an ice maker **32** and an ice discharge assembly **34**. The ice maker **32** is a conventional ice piece making apparatus which forms crescent shaped ice pieces. The ice maker **32** includes an ice mold body **36**, an ice stripper **38**, a rotatable ejector (not shown) and a housing **40**. The housing surrounds a drive motor and drive module (not shown) which operate to rotate the ejector (not shown) when ice harvesting is necessary. The ice maker disclosed in U.S. Pat. No. 4,649,717, herein incorporated by reference, is illustrative of the type of ice maker used in the present invention.

The ice maker **32** is supported by a mounting bracket **42** along the upper, front portion of the freezer compartment **16**. The mounting bracket **42** is attached to the top wall **24** (FIG. **3**) of the freezer compartment and forms a member having a generally U-shaped cross section. The bracket **42** includes top mounting surfaces **43** which attach to the top wall **24**. Side walls **44** extend downwardly along the sides of the ice maker **32**. A bottom wall **46** joins the side walls **44** and forms a heat shield beneath the bottom of the ice maker **32**. Downwardly directed tabs **48** depend from the top mounting surfaces **43**. The ice maker **32** is attached to the mounting bracket **42** via mounting legs (not shown). An air baffle member **52** is connected to the back of the ice maker **32** and acts to direct the flow of air within the freezer compartment **16** across the ice mold **36** as will be further discussed hereinbelow.

The ice discharge assembly **34** is designed to prevent ice harvesting when the ice storage bin **28** is full of ice pieces. The need for this function is well recognized in the ice maker art. If ice harvesting is not appropriately controlled, the ice maker **32** may make an excessive quantity of ice and overfill the ice storage receptacle **28**. In addition to limiting the quantity of ice produced, the ice discharge assembly **34** operates to control the discharge of ice pieces from the ice maker **32** such that ice pieces are not discharged when the freezer door **20** is open. If ice pieces are discharged when the door **20** is open, the ice pieces will fall onto the floor since the ice storage bin **28** is mounted on the door **20**. To achieve these dual purposes, the ice discharge assembly **34** includes a front cover **62**, a latching mechanism **64** and an ice level sensing mechanism **66** which operate together to achieve the above describe functions.

The ice stripper **38** includes a ramp **68** for directing harvested ice into the ice storage bin **28**. The ramp **68** may be integrally formed with the ice stripper, as shown, or may be a separate member. The front cover **62** is pivotably supported by the tabs **48** in front of the ice maker **32**. The front cover **62** is a generally flat member having a front surface **62***a* and a back surface **62***b*. The front cover includes a pair of support extensions **70** extending from the back surface **62***b* which are rotatably captured by the tabs **48** and allow the cover **62** to swing or pivot freely as long as the

ClibPDF - www.fastio.com
Copy provided by USPTO from the PIRS Image Database on 04/06/2007

latching mechanism **64** is not engaged. The ramp **68** is angled downwardly and forwardly toward the back surface of the front cover **62**. A bottom terminal edge **68***a* of the ramp **68** is disposed adjacent the back surface of the cover **62** wherein a small gap separates the bottom edge **68***a* and the back surface **62***b* of the cover **62**.

When ice pieces are ready to be harvested from the ice mold body **36**, the ejector and stripper **38** cooperate to remove ice pieces from the mold body **36** and urge the harvested ice pieces to slide forwardly along the stripper **38**. The ice pieces slide forward off the stripper **38** and are directed to slide down the ramp **68**. The spacing between the back wall of the cover **62** and the bottom edge **68***a* of the ramp **68** is such that ice pieces are not able to fit through the elongated gap which separates the ramp **68** and the cover **62**. Accordingly, ice pieces sliding down the ramp **68** make contact with the cover **62**. However, the mass of the ice pieces and the slope of the ramp **68** is such that the ice pieces push the cover **62** forward upon contact, rotating the cover **62** about the tabs **48**, wherein the ice pieces are able to fall into the storage bin **28**.

As mentioned above, the ice discharge assembly **34** serves to prevent overfilling of the ice storage receptacle by sensing the level of ice in the ice storage bin **28** and to prevent ice discharge when the door **20** is open. The ice level sensing mechanism **66** of the first embodiment of the ice discharge assembly, shown in FIGS. **4**, **5** and **6**, operates to prevent overfilling of the bin **28**. The ice level sensing mechanism **66** includes a shut-off arm **76** extending from the housing **40**. The shut-off arm **76** is lifted by a cam located within the housing **40** prior to and during the harvesting of ice cubes. The actuation of the shut-off arm **76** is described in U.S. Pat. No. 5,160,094 which is herein incorporated by reference.

The shut-off arm **76** is connected to a sensing finger **78** through a connecting rod **80**. The finger is connected to base **82** or alternatively, the base **82** and finger may be one integral part. The base **82** is pivotably supported by a pin **84**. As shown, the connecting rod **80** is rotatably connected to the shut-off arm **76** and the base **82** to allow for rotational motion of the finger **78** about the pin **84**. Thus, as the shut-off arm **76** is raised during the ice harvesting cycle, the finger **78** is pivotably raised out of the storage bin **28**. Once the ice pieces are harvested and have fallen into the bin **28**, the finger **78** is lowered back into the bin **28**.

When a sufficient amount of ice pieces have been delivered to the ice storage bin **28** so as to cause the level therein to rise to a preselected full level, the operation of the ice maker **32** will be interrupted by preventing the shut-off arm **76** from returning to its normal position. This occurs when the finger **78** contacts ice pieces when it is lowered back into the ice storage bin **28** such that it is prevented from fully descending into the bin **28**. The ice maker operation will be interrupted until such time as the level of ice pieces in the bin **28** is lowered as by removing some or all of the ice bodies therein. When this occurs, the finger **78** is allowed to fully descend into the bin **28** permitting the shut-off arm **76** to return to its normal position wherein the ice maker operation is resumed. A lever **81** extends from the connecting rod through the front cover **62** to allow a user to manually deenergize the ice maker **32** by lifting the shut-off arm **76** via the lever **81**.

As can be readily appreciated from the above description, every time the freezer door **20** is opened, the ice storage bin **28**, being mounted on the door **20**, is removed from beneath the ice making assembly **22**. Accordingly, it is necessary to completely lift the ice level sensing finger **78** out of the ice storage bin **28** when the freezer door **20** is opened. Failure to lift the finger **78** out of the bin **28** when the door **20** is open could result in damage to the finger **78** and to the entire ice level sensing system **66**.

FIG. **6** in combination with FIGS. **5** and **6** illustrate the mechanism used to lift the finger **78** out of the bin **28** when the door **20** is opened. A bin lever **100** is rotatably supported adjacent the rear wall **28***a* of the bin **28**. The bin lever **100** is preferably a wire member having an upper latching portion **102** and a lower bin engagement portion **104** joined by a center portion. As shown in the FIG. **6**, the bin lever **100** may be supported by a side extension portion **110** extending from the main body of the ramp **68**. The bin lever **100** is snap fit into a pair of slotted openings provided on a support walls **112** and **114** which extend from the side extension **110**. The upper latching portion **102** extends forwardly through a guide slot **116** formed into the side extension **110**. The guide slot **116** ensures the proper vertical orientation of the upper latching portion **102** of the bin lever **100**. It should be noted that the bin lever **100** could be supported in other ways, such as by structure extending from the housing **40**.

A spring **118** engages the bin lever **100** and biases it to rotate clockwise when viewed from above, as shown by arrow **120**, such that the bin engagement portion **104** is biased toward the rear wall of the bin **28***a*. When the door **20** is closed, the rear wall **28***a* of the bin **28** engages the bin engagement portion **104** winding the spring **118** and causing the bin lever **100** to rotate counterclockwise, opposite of the arrow **120**. However, when the door **20** is opened, the bin lever **100** is free to rotate clockwise until the latching portion **102** engages the base of the guide slot **116**.

As described above, the finger **78** is connected to the base **82** and the base is pivotally supported about the pin **84**. The pin **84** extends outwardly from the side extension **110**. Accordingly, lowering and raising the finger **78** is accomplished by rotating the finger about the pin **84**. The base has a ramp surface **86**. The ramp surface **86** is positioned within the travel of the latching portion **102** of the bin lever **100**. When the door **20** is closed, the bin lever is rotated to a position which allows the finger to descend into the bin **28**. However, when the door **20** is opened, the clockwise rotation of the bin lever **100** causes the latching portion **102** to engage the ramp surface **86**, rotating the finger **78** up out of the bin **28**. In this manner, whenever the door **20** is opened the finger **78** is lifted completely clear of the bin **28**. To further ensure that damage does not occur to the finger **78** when the freezer door **20** is opened, the finger **78** may be formed from flexible plastic or elastomeric material such that finger **78** will flex if forced into contact with the bin **28**.

The lifting of the finger **78**, caused by the sliding engagement between the ramp surface **86** and the latching portion **102**, also lifts the connecting rod **80** and the shut-off arm **76** such that the ice maker **32** is deenergized, preventing ice harvesting when the door **20** is open, thereby preventing ice from falling from the ice discharge assembly **34** when the door **20** is open.

The latching mechanism **64** further provides a means for preventing ice from falling from the ice discharge assembly **34** when the door **20** is open. The latching mechanism **64** operates to secure the front cover **62** in a closed position when the door **20** is open. The front cover **62** includes a catch **88** which extends from the back surface **62***b*. The catch **88** is positioned adjacent the latching portion **102** of the bin lever **100**. As described above, when the door **20** is opened, the bin lever **100** rotates clockwise, as shown by arrow **120**. This rotation of the bin lever **100** causes the latching portion

ClibPDF - www.fastio.com
Copy provided by USPTO from the PIRS Image Database on 04/06/2007

102 to rotate into a position wherein the latching portion engages the catch 88 thereby preventing the cover 62 from pivoting about the tabs 48. Accordingly, whenever the door 20 is open, the bin lever 100 rotates to a position wherein the cover 62 is latched closed. When the cover 62 is latched closed, the gap between the back surface 62*b* and the bottom edge 68*a* of the ramp is insufficient for ice pieces to pass therebetween. Thus, any ice pieces which are on the ice stripper 38 or ramp 68 when the door 20 is opened are prevented from falling out of the ice discharge assembly 34 until the door 20 is again closed.

While the bin lever 100 is shown rotatably supported about a vertical axis, it can be readily understood that the bin lever could be rotatably supported about a horizontal axis. Moreover, the bin lever could be operated to lift an ice sensing finger which is slidably supported above the ice storage bin rather than an ice sensing finger which is rotatably supported.

FIGS. 7 and 8 disclose an alternative embodiment ice discharge assembly 130. In this embodiment, the ice maker 32, which is similar to the first embodiment, is supported by mounting bracket 132. The mounting bracket 132 includes a bottom shield portion 134 positioned below the ice maker 32. A pair of arms 136, 138 extend upwardly from the bottom shield portion toward the top wall 24 (FIG. 3) of the freezer compartment and provide means for rigidly mounting a front cover 140. As shown, the connection means for the front cover may include a pair of slotted tabs 136*a*, 138*a* and a pair of tabs 136*b*, 138*b*. A rear air deflector 142 also extends upwardly from the bottom shield portion 134. Both the arms 136, 138 and the rear air deflector 142 mount to the top wall 24 of the freezer compartment. The ice maker 32 is mounted to the rear air deflector 142 by a pair of mounting feet 144, 146.

A rotatable ramp 150 is connected to the ice maker 32 and may preferably be pivotably connected to an ice stripper 152. However, the ramp 150 may be pivotably connected to other ice maker components such as the ice mold. The ramp 150 is biased to rotate upwardly toward a horizontal position. The ramp 150 is preferably biased by a spring (not shown) which is between the ramp 150 and the ice maker 32. An arm portion 153 extends downwardly and outwardly from the ramp 150 and engages the ice storage bin 28 when the door 20 is closed. In this manner, as the door 20 is closed and the ice storage bin 28 is positioned beneath the ice making assembly 22, the bin 28 engages the arm 153 and rotates the ramp 150 approximately 70° into a downward position.

The ramp 150 includes a bottom terminal edge 150*a*. When the ramp 150 is rotated into its horizontal position, due to the door 20 being open, the terminal edge 150*a* is positioned adjacent the back of the front cover 140 such that any ice that is dispensed from the ice maker 32 is trapped between the ramp 150 and the front cover 140. In this manner, ice can not be discharged from the ice discharge assembly 130 when the door 20 is open. When the ramp 150 is rotated down, due to the door 20 being closed, the bottom edge 150*a* is moved away from the front cover 140 such that ice pieces can slide down the ramp 150 and fall into the ice storage bin 28.

In addition to preventing the discharge of ice when the freezer door 20 is open, the ice discharge assembly serves to prevent overfilling of the ice storage bin 28 by sensing the level of ice in the bin 28. To that end, a shut-off arm 154 is provided extending from the housing 40. The shut-off arm 154, similar to the shut-off arm 76, is lifted by a cam located within the housing 40 prior to and during the harvesting of ice cubes. The actuation of the shut-off arm 154 is described in U.S. Pat. No. 5,160,094 which was previously incorporated by reference.

The shut-off arm is a wire member having a terminal portion which is drivingly connected to an ice sensing finger 156. In particular, the terminal portion of the shut-off arm 154 is disposed between a pair of horizontal walls 156*a*, 156*b* extending from the upper end of the ice sensing finger 156. The ice sensing finger 156 is slidingly supported by the front cover 140 for vertical movement and has a bottom portion which extends down into the ice storage bin 28. During ice harvesting from the ice maker 32, the shut-off arm 154 lifts the ice sensing finger 156 up out of the bin 28 and then lowers the finger 156 back into the bin. When a sufficient amount of ice pieces have been delivered to the storage bin 28 so as to cause the level therein to rise to a preselected full level, the operation of the ice maker 32 will be interrupted by preventing the shut-off arm 154 from returning to its normal position. In addition to deenergizing the ice maker in response to the ice level sensing operation, a knob 157 extends from the finger 156 through the front cover 140 to allow a user to manually deenergize the ice maker 32 by lifting the shut-off arm 154 via the knob 157.

The motion of the rotatable ramp 150 during the opening of the freezer door 20 also acts to lift the finger 156 out of the bin 20 when the door 20 is opened, thereby preventing damage to the finger 156. The ramp 150 includes a side wall 158 having a rod-like extension 159. The extension 159 is disposed beneath the wall 156*b* of the finger 156. Upon opening the door 20, the ramp 150 rotates upwardly wherein the extension 159 engages the wall 156*b* and raises the finger 156 and rotates the shut-off arm up from its normal position. In this manner, the ice maker 32 is deenergized, preventing ice harvesting when the door 20 is open and thereby preventing ice pieces from falling from the ice discharge assembly 130 when the freezer door 20 is open. To further ensure that damage does not occur to the finger 156 when the freezer door 20 is opened, the finger 156 may be formed from flexible plastic or elastomeric material such that finger 156 will flex if forced into contact with the bin 28.

In the ice discharge assembly 34 of the first embodiment, shown in FIGS. 4–6, and the ice discharge assembly 130 of the second embodiment, shown in FIGS. 7 and 8, the mechanical ice level sensing systems may be replaced by an electronic optical system as shown in FIGS. 12 and 13. In an optical ice level sensing system, light (electromagnetic radiation of any wavelength) is used to sense the presence of ice pieces. An optical ice level sensing system takes advantage of the fact that ice pieces formed by a conventional ice maker, as described above, have a cloudy core which is due to air bubble entrapment, crazing during the freezing process, and water impurities among other things. This cloudy core of the ice pieces blocks a wide range of wave lengths that are generated and sensed by many standard infrared (IR) radiation products.

As shown in FIGS. 12 and 13, an optical ice level sensing system includes a light emitter 500 and receiver 502. The emitter 500 may be a printed circuit board (PCB) having a IR photo diode 504 which emits an IR light while the receiver may be a photo transistor 506 mounted to a PCB along with a microprocessor 507 and the necessary electronic circuitry to operate the optical ice level sensing system. The microprocessor 507 controls the operation of the ice level sensing system. The emitter 500 may be mounted to a side wall of the freezer compartment 16 adjacent the top of the ice storage bin 28 while the receiver

ClibPDF - www.fastio.com

Copy provided by USPTO from the PIRS Image Database on 04/06/2007

502 is mounted to the side wall of the freezer compartment 16 opposite from the emitter. A pair of openings 508 and 510 are disposed in the ice storage bin 28 near the top surface of the bin 28 such that a line of sight or clear path 512 is created between the emitter and the receiver.

During operation of the optical system, IR radiation is generated by the emitter 500 which is directed to pass along the path 512 through the ice storage bin 28 to be received by the receiver 502. As discussed above, ice pieces, due to there cloudy core, will impede the transmission of the IR radiation such that the level of the level the IR signal received by the receiver can be used as an indicator of the ice level. When the IR photo diode 504 is pulsed, if the photo transistor 506 senses an IR signal, this indicates that the ice bin 28 is not completely filled with ice and the ice maker 32 will be operated to produce and harvest more ice pieces. If the photo transistor 506 does not sense an IR signal when the emitter 500 is pulsed, this indicated that the ice bin 28 is full of ice pieces and further ice will not be harvested.

One problem with an optical ice level sensing system is that ice can coat the photo diode 504 and the photo transistor 506 such that sending and receiving IR signals is impaired. The signal may be degraded to a point where the optical system provides a false full ice bin signal when in fact the ice storage bin is not full of ice pieces. This occurs particularly quickly when the refrigerator is operated in a hot and humid location wherein when the freezer door 20 is opened, moisture immediately condenses onto the cold surfaces within the freezer compartment 16.

This degradation can be sensed and distinguished from a normal situation as shown in FIG. 13. The microprocessor 507 receives signal 1 across line 518 and signal 2 across line 520. With clean optics, both signal 1 and 2 are read as a logic level "1" when the bin is empty and a logic level "0" when the bin is full. At some point during the degradation process, the lesser voltage at signal 2 will fall below the microprocessor input threshold and be read as a logic level "0" while the greater signal 1 is still large enough to be read as a logic level "1". Whenever signals 1 and 2 differ, ice build up has occurred and it is necessary to clean the optic system.

Heater resistors are shown as 522 which are used to clean the optics system. The heaters are physically located adjacent the photo transistor 506 and the photo diode 504. When optic cleaning is necessary, the heaters 522 are energized to warm the photo transistor 506 and the photo diode 504 such that the accumulated ice is melted away.

Turning now back to FIGS. 2 and 3, the ice dispensing system 26 can be further explained. The ice storage bin 28 is mounted to the freezer door and includes an upper ice bin member 160 and a lower ice bin member 162. The upper ice bin member 160 is formed from a clear plastic material such that the quantity of ice pieces stored within the ice bin 28 is easily visually determined. The lower ice bin member 162 is rigidly connected to the upper ice bin member 160 and includes a funnel wall portion 164, a cylindrical wall portion 166 and a bottom wall portion 168. The bottom wall portion 168 includes an ice outlet opening 170 through which the ice pieces must pass to be dispensed.

Rotatably supported within the ice bin 28 is an auger 172 having a shaped upper end 174 and a bottom shaft 176. The upper end 174 is supported within the upper ice bin member 160 and is designed to break up any large clumps of ice pieces which may be formed when ice pieces partially melt and then refreeze. Accordingly, rotation of the auger 172 ensures that the ice pieces are free to move downwardly, under the urgings of gravity, though the lower ice bin member and the ice crushing system 30 such that ice pieces may be dispensed. The upper end 174 of the auger 172 is also configured to avoid pushing ice pieces up and over the rim of the upper ice bin member 160.

As best seen in FIGS. 3 and 9, the bottom shaft 176 of the auger 172 is disposed within the lower ice bin member. The bottom shaft 176 is provided with a flat surface such that various parts may be assembled to the shaft for co-rotation therewith. The upper end 176*a* of the bottom shaft 176 is positioned within the funnel wall portion 164 and the bottom end 176*b* of the bottom shaft 176 extends through the bottom wall for coupling to a drive shaft 178. The coupling between the drive shaft 178 and the bottom shaft 176 may be accomplished through use of a coupling member.

Drivingly connected to the upper end 176*a* of the bottom shaft 176 is a bridge breaker blade 180. The bridge breaker blade 180 rotates above a blade cover 182. The blade cover 182 is a plate which is attached to the lower ice bin member at the junction between the funnel wall portion 164 and the cylindrical wall portion 166. The cover 182, together with the funnel wall portion 164, forms a bottom wall of the upper ice bin member 160. An inlet opening 184 is formed into the cover 182 through which ice pieces must pass to be discharged. The inlet opening 184 is positioned 180° opposite of the outlet opening 170. As the auger 172 rotates, ice pieces are directed by the funnel wall portion 164 toward the inlet opening 184. The bridge breaker blade 180 ensures that the inlet opening 184 does not become jammed or bridged by ice pieces thereby preventing ice dispensing.

Once ice pieces pass through the inlet opening 184 they are disposed within a cylindrical ice crushing region 186 defined by the cylindrical wall portion 166, the cover 182 and the bottom wall portion 166. The bottom shaft 176 passes through the center of this region. Extending from the bottom shaft 176 are a plurality of ice crusher blades 188. The ice crusher blades 188 are connected to the bottom shaft for co-rotation therewith. A plurality of stationary blades 190 extend between the bottom shaft 176 and the cylindrical wall portion 166. The stationary blades 190 are positioned adjacent the side edge 170*a* of the ice outlet opening.

Rotation of the auger 172 causes the ice pieces to pass through the inlet opening 184 and fall into the ice crushing region 186. If the auger 172 is rotated counterclockwise, as shown by arrow 192, the ice pieces within the crushing region 186 are swept by the ice crushing blades 188 from the inlet opening 184 around within the crushing region 186 to fall through the outlet opening 184. The ice pieces move from the inlet opening 184 to the outlet opening 170 without having to pass through the stationary crusher blades. In this manner, when the auger 172 is rotated in the direction of arrow 192, whole ice pieces are dispensed though the outlet opening 170 and no ice crushing occurs.

If the auger 172 is rotated clockwise, as shown by arrow 194, the ice pieces within the crushing region 186 are swept by the ice crushing blades 188 from the inlet opening and are driven into the stationary ice crushing blades 190. The rotation of the auger 172 rotates the blades 188 past the stationary blades 190 resulting in the ice pieces being crushed. The crushed ice pieces, once past the stationary blades 190, fall through the outlet opening 170. In this manner, when the auger 172 is rotated in the direction of arrow 194, crushed ice pieces are dispensed though the outlet opening 170. Once the ice pieces, in either a whole or crushed form, are passed through the ice outlet opening 170, they fall through a chute 196 formed into the freezer door 20 to a waiting receptacle positioned within the service area 31

ClibPDF - www.fastio.com
Copy provided by USPTO from the PIRS Image Database on 04/06/2007

While the dispensing of the ice pieces have been described with regard to the use of a plurality of crusher blades **188**, the invention could readily be practiced with just one crusher blade **188** and one stationary blade **190**. Moreover, the invention could dispense ice from the ice storage bin **28** without use of rotating and stationary crushing blades. For example, the rotary blades **188** and stationary blades **190** could be omitted and replaced with a paddle or other valving devices such as a pivotable or rotary door.

As just described, rotation of the auger **172** and the associated ice crusher blades **188** causes ice to be moved from the area of the upper ice bin member **160**, through the ice inlet opening **184** and outlet opening **170** such that ice pieces are dispensed. The auger **172** is rotated by the drive shaft **178** which extends from a motor **200**. The motor **200** is supported on the freezer door **20** below the ice service. The drive shaft **178** extends a relatively large distance between the motor and the ice bin **28**.

To ensure proper operation of the ice delivery system of the present invention, it is important to rigidly and securely support the motor **200** and the ice bin **28** on the freezer door **20** since these parts must align for proper operation. The construction of the freezer door, as shown in FIG. **3**, provides the necessary strength and rigidity. The freezer door **20** comprises a metallic outer wrapper **202**, an inner liner **204** with a foam material **206** disposed between the wrapper **202** and the liner **204**. The ice service area **31** is formed by a service housing **205** which attaches to an opening in the wrapper **202**. The fabrication of the door **20** may be such that the foam material **206** is foamed in place between the wrapper **202**, the liner **204** and service housing **205** and bonds to the inner surfaces of the wrapper **202**, liner **204** and service housing **205** providing a great deal of strength and rigidity.

FIGS. **3** and **10** illustrate the components used to support the motor and the ice storage bin **28**. The motor **200** is mounted to a bracket **207** within a cup-shaped support member or housing **208** which is connected to the inner liner **204** prior to the foaming operation. A motor cover plate **209** is placed over the open end of the housing **208** after the motor is assembled to the door. The ice bin **28** is mounted to a mounting plate **210** which is connected to the inner liner **204**. A conduit **212** extends between the mounting plate **210** and the housing **208** through which the drive shaft **178** can extend. A wiring conduit **214** is also connected to the motor housing **208** and extends upwardly to connect to the housing **205**. In this manner, wiring can be routed between the motor **200** and controls placed in the ice service area **31**.

Accordingly, it can be understood that during fabrication of the freezer door **20**, the housing **208**, the mounting plate **210**, the conduit **212** and the wiring conduit **214** are assembled to the inner liner **204** and then the foam **206** is foamed between the liner **204** and the wrapper **202** such that the components are bonded into position. Moreover, it can be readily appreciated by one skilled in the art that the conduits **212** and **214** may be integrally formed as part of the mounting plate **210** or the housing **208**. Likewise, the mounting plate **210** or the housing **208** may be able to be integrally formed as part of the service housing **205**.

One of the benefits of the present invention is that the ice bin **28** is removable from the freezer door. This allows a user to readily remove the ice bin **28** and dump a large quantity of ice into a receptacle such as an insulated cooler. FIGS. **10** and **11** best show how this is accomplished. The lower ice bin member **162** is provided with a pair of cylindrical bosses **218** or receptacles which correspond to mounting pins **220** provided on the mounting plate **210**. When the ice storage bin **28** is properly set upon the mounting plate **210**, the receptacles **218** and pins **220** align. Moreover, when the bin **28** is properly placed on the plate **210**, the drive shaft **178** is coupled with the auger **172** and the ice outlet **170** is disposed over the chute **196**.

Means are provided for securing the bin **28** to the mounting plate **210**. Each of the pins **220** are provided with an annular groove **222**. A retention bar **224** is slidingly supported by the lower ice bin member **162**. A button **226**, connected to the bar **224**, is provided for longitudinally moving the retention bar **224** which is biased toward the button **226**. The retention bar **224** has a pair of cut out portions (not shown) corresponding to the grooves **222**. When the bin **28** is placed onto the mounting plate **210**, the pins **220** are received into the receptacles **218** and the cut out portions of the retention bar **224** are engaged into the grooves **222** provided on the pins **220**. When it is desired to remove the bin **28**, the button **226** is depressed such that the cut out portions of the retention bar **224** are disengaged from the grooves **222**, allowing separation between the plate **210** and the bottom bin member **162**.

While the retention means are shown in the present description as a retention bar and a pair of pins, the present invention is not limited to this structure. For example, only on pin could be used. Moreover, the retention means could be something other than a pin and bar such as a hook and latch arrangement.

It can be seen, therefore, that the present invention provides a unique ice delivery system wherein the ice maker is located along the top wall of the freezer and the ice storage bin is mounted to the freezer door. A dispensing system including a motor is also supported on the freezer door. The present invention provides an ice storage bin which is a vertically elongated storage container with a vertically arrange auger disposed therein such that the dispensing of ice is readily accomplished. The ice storage bin is partially transparent which allows for the easy visual determination of the amount of ice in the storage bin. The present invention further provides a manner of assembling the ice storage bin and motor to the freezer door which is designed to provide adequate strength and rigidity.

While the present invention has been described with reference the above described embodiment, those of skill in the Art will recognize that changes may be made thereto without departing from the scope of the invention as set forth in the appended claims.

We claim:

1. A refrigerator including a freezer compartment having an access opening and a closure member for closing the access opening, the refrigerator comprising:

an ice maker being disposed within the freezer compartment for forming ice pieces;

an ice storage bin mounted to the closure member below the ice maker for receiving ice from the ice maker, the ice storage bin having a bottom opening;

a motor mounted on the closure member; and

an auger disposed within the ice storage bin and drivingly connected to the motor,

wherein upon energization of the motor, the auger moves ice pieces from the ice storage bin through the bottom opening for dispensing from the ice storage bin.

2. The refrigerator according to claim **1**, further comprising:

an ice discharge chute through the closure member below the bottom opening of the ice storage bin wherein upon

ClibPDF - www.fastio.com

Copy provided by USPTO from the PIRS Image Database on 04/06/2007

energization of the motor, the auger moves ice pieces from the ice storage bin through the bottom opening to the ice discharge chute.

3. The refrigerator according to claim 1, further wherein the auger is supported in a vertical orientation within the ice storage bin

4. The refrigerator according to claim 1 further wherein the ice storage bin is at least partially formed out of a transparent material such that the amount of ice pieces in the ice storage bin can be readily visually determined.

5. The refrigerator according to claim 1 further comprising:

a breaker blade rotatably connected to the auger, the breaker blade being disposed within the ice storage bin adjacent the bottom opening of the ice storage bin.

6. The refrigerator according to claim 1 further wherein the ice storage bin comprises:

the ice storage bin defines an ice crushing region through which the ice pieces must pass when ice pieces are discharged through the bottom opening, the ice crushing region having an inlet opening;

the auger having a shaft portion passing through the ice crushing region;

at least one ice crusher blade rotatably connected to the shaft portion for rotation within the ice crushing region; and

at least one stationary blade mounted within the ice crushing region such that the ice crusher blade rotates past the stationary blade.

7. The refrigerator according to claim 6 further comprising:

a breaker blade rotatably connected to the auger, the breaker blade being disposed adjacent the inlet opening of the ice crushing region.

8. The refrigerator according to claim 1 further wherein the ice storage bin comprises:

an upper ice bin member having a bottom edge;

a lower ice bin member connected to the lower edge of the upper ice bin member, the lower ice bin member defining an ice crushing region through which the ice pieces must pass when ice pieces are discharge through the bottom opening;

the auger having a shaft portion passing through the ice crushing region;

at least one ice crusher blade rotatably connected to the shaft portion for rotation within the ice crushing region; and

at least one stationary blade mounted within the ice crushing region such that the ice crusher blade rotates past the stationary blade.

9. The refrigerator according to claim 1 wherein the ice storage bin is removable from the freezer compartment closure member.

10. A refrigerator including a cabinet for defining a freezer compartment having top wall and an access opening, the refrigerator comprising:

a closure member for closing the access opening;

an ice maker being disposed within the freezer compartment adjacent the top wall for forming ice pieces;

an ice storage bin removably mounted to the closure member below the ice maker for receiving ice from the ice maker, the ice storage bin having a bottom opening;

an ice discharge chute forming an opening through the closure member below the bottom opening of the ice storage bin;

a motor mounted on the closure member; and

an auger vertically disposed within the ice storage bin and drivingly connected to the motor,

wherein upon energization of the motor, the auger moves ice pieces from the ice storage bin through the bottom opening to the ice discharge chute.

11. The refrigerator according to claim 10 further wherein the ice storage bin is formed out of a clear material such that the amount of ice pieces in the ice storage bin can be readily visually determined.

12. The refrigerator according to claim 10 further comprising:

a breaker blade rotatably connected to the auger, the breaker blade being disposed within the ice storage bin adjacent the bottom opening of the ice storage bin.

13. The refrigerator according to claim 10 further wherein the ice storage bin comprises:

the ice storage bin defines an ice crushing region through which the ice pieces must pass when ice pieces are discharged through the bottom opening, the ice crushing region having an inlet opening;

the auger having a shaft portion passing through the ice crushing region;

at least one ice crusher blade rotatably connected to the shaft portion for rotation within the ice crushing region; and

at least one stationary blade mounted within the ice crushing region such that the ice crusher blade rotates past the stationary blade,

wherein when the motor is rotated in a first direction the ice pieces are crushed prior to being dispensed through the chute and when the motor is rotated in a second direction whole ice pieces are dispensed through the ice chute.

14. The refrigerator according to claim 13 further comprising:

a breaker blade rotatably connected to the auger, the breaker blade being disposed adjacent the inlet opening of the ice crushing region.

15. The refrigerator according to claim 10 further wherein the ice storage bin comprises:

an transparent upper ice bin member having a bottom edge;

a lower ice bin member connected to the lower edge of the upper ice bin member, the lower ice bin member defining an ice crushing region through which the ice pieces must pass when ice pieces are discharge through the bottom opening, the ice crushing region having an inlet opening;

the auger having a shaft portion passing through the ice crushing region;

at least one ice crusher blade rotatably connected to the shaft portion for rotation within the ice crushing region; and

at least one stationary blade mounted within the ice crushing region such that the ice crusher blade rotates past the stationary blade,

wherein when the motor is rotated in a first direction the ice pieces are crushed prior to being dispensed through the chute and when the motor is rotated in a second direction whole ice pieces are dispensed through the ice chute.

ClibPDF - www.fastio.com

Copy provided by USPTO from the PIRS Image Database on 04/06/2007

16. The refrigerator according to claim 10, further comprising:

a mounting plate connected to the closure member wherein the ice storage bin is removably mounted to the mounting plate for support on the closure member

17. The refrigerator according to claim 16 further wherein:

the mounting plate includes at least one pin;

the ice storage bin includes at least one receptacle corresponding to the pin and a locking mechanism to secure the ice storage bin to the mounting plate

18. A refrigerator including a cabinet defining a freezer compartment having an access opening, the refrigerator comprising:

a door hingedly mounted to the cabinet for closing the access opening, the door including an inner liner, a outer wrapper and a foam material therebetween;

a mounting plate connected to the inner liner;

an ice discharge chute extending through the door adjacent the mounting plate;

a support member connected to the inner liner below the mounting plate;

an ice storage bin removably mounted to the mounting plate for receiving ice pieces, the storage bin having a bottom opening;

a motor supported by the support member below the ice storage bin, the motor having a drive shaft extending from the support member to the mounting plate; and

an auger rotatably disposed within the ice storage bin for coupling with the drive shaft wherein upon energization of the motor, the auger moves ice pieces from the ice storage receptacle through the bottom opening to the ice discharge chute.

19. The refrigerator according to claim 18 further comprising:

an ice maker mounted within the freezer compartment for delivering ice pieces to the ice storage bin

20. The refrigerator according to claim 18 wherein the foam material is added to the door after the inner liner, outer wrapper, mounting plate and support member have been assembled such that the foam bonds to these components and secures them into position.

21. The refrigerator according to claim 18 wherein the support member is a cup-shaped housing for receiving the motor.

22. The refrigerator according to claim 18 further comprising:

a conduit extending from the support member to the mounting plate through which the drive shaft extends.

23. The refrigerator according to claim 22 further comprising:

a housing mounted onto the outer wrapper defining an ice service area;

a wiring conduit extending from the support member to the housing.

24. The refrigerator according to claim 18 further wherein the ice storage bin is at least partially formed from a transparent material such that the amount of ice pieces in the ice storage bin can be readily visually determined.

25. The refrigerator according to claim 18 further wherein the ice storage bin comprises:

an upper ice bin member having a bottom edge;

a lower ice bin member connected to the lower edge of the upper ice bin member, the lower ice bin member defining an ice crushing region through which the ice pieces must pass when ice pieces are discharge through the bottom opening, the ice crushing region having an inlet opening;

the auger having a shaft portion passing through the ice crushing region;

at least one ice crusher blade rotatably connected to the shaft portion for rotation within the ice crushing region; and

at least one stationary blade mounted within the ice crushing region such that the ice crusher blade rotates past the stationary blade

* * * * *

ClibPDF - www.fastio.com

Copy provided by USPTO from the PIRS Image Database on 04/06/2007

EXHIBIT B

US006810680B2

(12) **United States Patent**
Pohl et al.

(10) **Patent No.: US 6,810,680 B2**
(45) **Date of Patent: Nov. 2, 2004**

(54) **ICE MAKER FILL TUBE ASSEMBLY**

(75) Inventors: **Douglas A. Pohl**, Davenport, IA (US); **William James Vestal**, Monmouth, IL (US); **Kenton John Widmer**, Knoxville, IL (US)

(73) Assignee: **Maytag Corporation**, Newton, IA (US)

(*) Notice: Subject to any disclaimer, the term of this patent is extended or adjusted under 35 U S C 154(b) by 0 days

(21) Appl. No : **10/355,085**

(22) Filed: **Jan. 31, 2003**

(65) **Prior Publication Data**

US 2004/0148957 A1 Aug 5, 2004

(51) **Int. Cl.**[7] **F25C 5/02**
(52) **U.S. Cl.** **62/71**; 62/420
(58) **Field of Search** 62/347, 340, 300, 62/71, 75, 353, 420

(56) **References Cited**

U S PATENT DOCUMENTS

3,744,270	A		7/1973	Wilcox	
3,755,994	A		9/1973	Bidiwala	
3,775,994	A	*	12/1973	Linstromberg et al	62/177
3,835,661	A		9/1974	Kochendorfer et al	
3,866,434	A	*	2/1975	Pugh et al	62/340
3,937,032	A	*	2/1976	Bright	62/135
4,020,644	A		5/1977	True, Jr. et al	
4,142,378	A	*	3/1979	Bright et al	62/135
4,191,025	A		3/1980	Webb	
4,272,025	A	*	6/1981	Mazzotti	239/240
4,341,087	A	*	7/1982	Van Steenburgh, Jr	62/233
4,366,679	A	*	1/1983	Van Steenburgh, Jr	62/347
4,632,280	A	*	12/1986	Mawby et al	222/275
4,635,444	A		1/1987	Mawby et al	
4,680,943	A		7/1987	Mawby et al	
5,924,301	A	*	7/1999	Cook	62/347
5,964,617	A	*	10/1999	Hoang et al	439/528
6,148,624	A	*	11/2000	Bishop et al	62/137
6,157,777	A		12/2000	Banks et al	
6,470,701	B2	*	10/2002	Tchougounov et al	62/347
6,490,873	B2	*	12/2002	Tchougounov	62/71
6,574,982	B1	*	6/2003	Wiseman et al	62/347
2001/0011461	A1		8/2001	Tchougounov et al	

FOREIGN PATENT DOCUMENTS

JP	402126070	A	*	5/1990

* cited by examiner

Primary Examiner—William Doerrler
Assistant Examiner—Mohammad M. Ali
(74) *Attorney, Agent, or Firm*—Diederiks & Whitelaw, PLC

(57) **ABSTRACT**

An ice maker assembly in a refrigerator freezer includes a fill tube for transporting liquid to a mold The freezer includes an outer wall spaced apart from an inner wall, with a plenum formed therebetween An opening is formed within the inner wall, through which the fill tube extends with a clearance. Warm air generated by a defrost cycle passes through the clearance in the inner wall and around the fill tube, thereby warming the fill tube In addition, the fill tube includes vents formed therein to allow active ventilation of the fill tube and to prevent ice formation within the fill tube

14 Claims, 2 Drawing Sheets

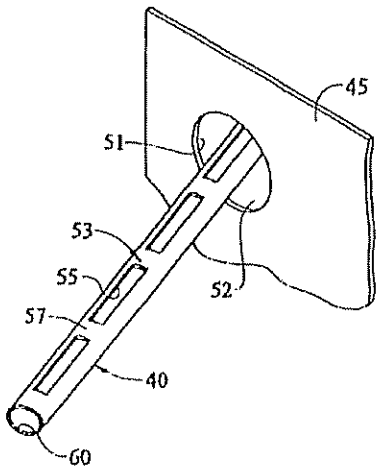

FIG. 1

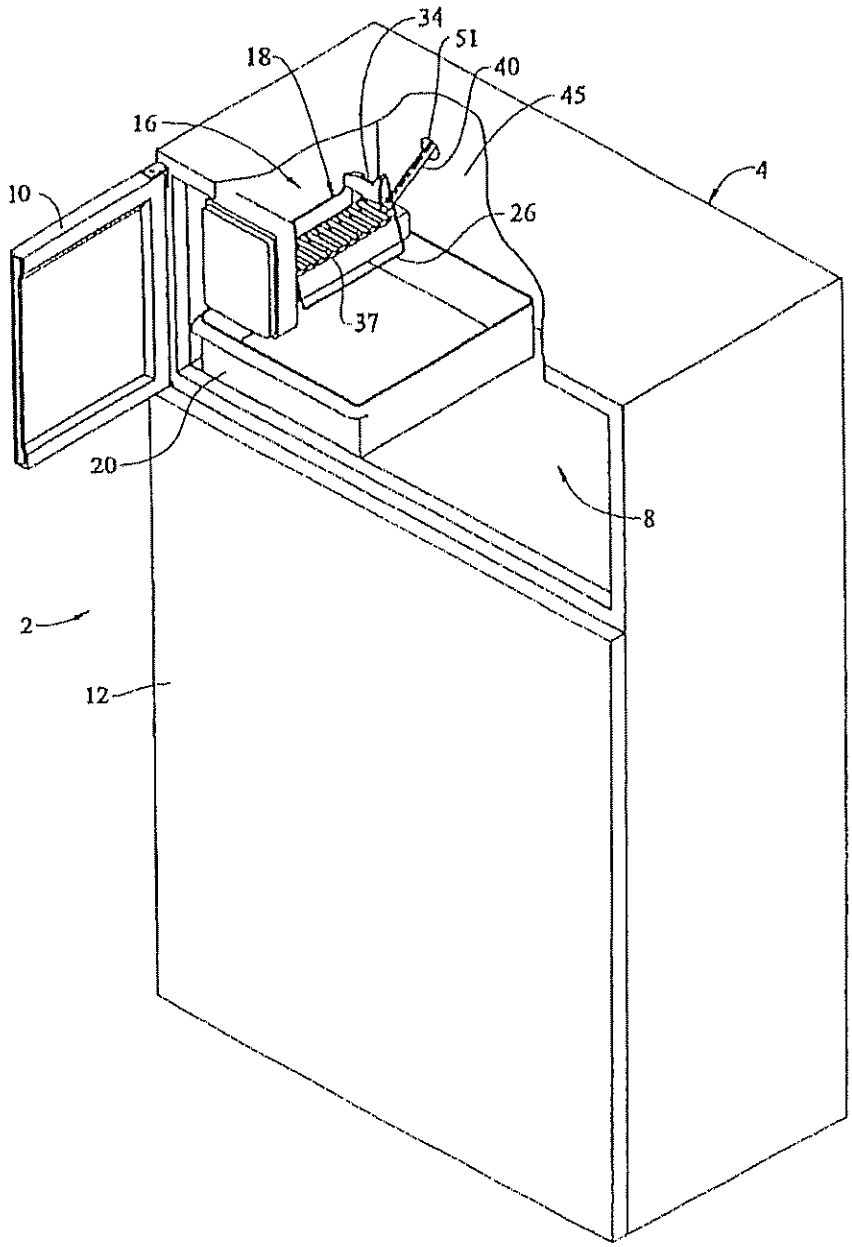

FIG. 2

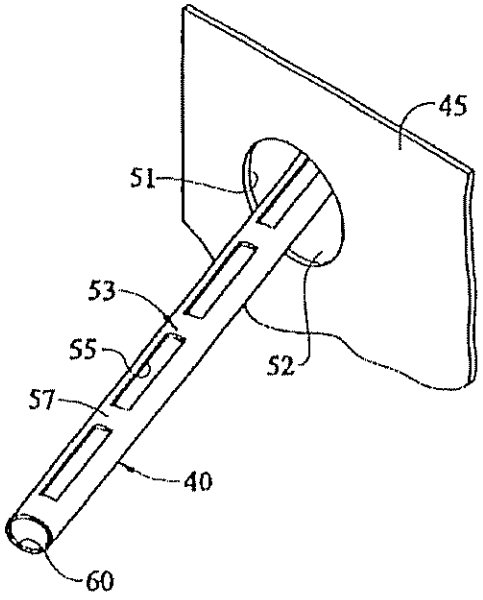

FIG. 3

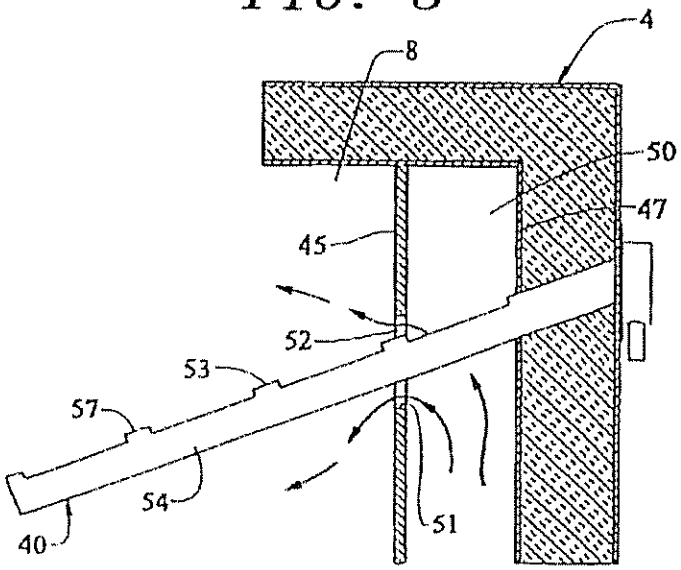

ICE MAKER FILL TUBE ASSEMBLY

BACKGROUND OF THE INVENTION

1 Field of the Invention

The present invention pertains to the art of refrigerators, and, more particularly, to a fill tube arrangement for an ice maker assembly provided in a freezer of a refrigerator

2 Discussion of the Prior Art

Providing automatic ice makers in household refrigerators has become extremely commonplace Ice makers typically include a tray that is filled by a water fill tube extending through a wall of a freezer compartment

Since the ice maker fill tube extends into the freezer compartment, a problem exists in that water can freeze within the tube and lead to clogging of the tube Several attempts have been made to solve this problem For example, U S Pat. No 4,020,644 discloses a water supply line that is maintained in contact with the freezer compartment outer case over a pre-selected length of the fill tube sufficient to prevent freezing of water in the fill tube In addition, the fill tube is insulated with foam material In the arrangement of the '644, patent, there is still a possibility that the tube may freeze More particularly, only a portion of the tube is in heat exchange relationship with the outer case Therefore, any heat provided by the outer case may not be sufficient to prevent freezing of other portions of the fill tube Further, the tube is surrounded by foam and may be difficult to remove if it is necessary to clear an ice blockage within the tube.

Another attempt to solve the problem of ice formation in an ice maker fill tube is demonstrated by U.S Pat No 6,157,777. In this arrangement, an ice maker fill tube includes a heater for maintaining a fluid within the tube at or above a predetermined temperature The fill tube and heater are integrally formed so the heater is protected from physical damage However, this arrangement adds significantly to the costs associated with manufacturing the fill tube and ice maker Additionally, the heater arrangement will certainly affect installation and repair costs associated with the fill tube and ice maker

Based on the known prior art, there is a need in the art for an ice maker fill tube assembly that prevents ice from freezing within the fill tube Further, there is a need for an assembly that is inexpensive to manufacture, easy to maintain, and provides reliable protection against ice build-up

SUMMARY OF THE INVENTION

The present invention is directed to a fill tube arranged for an ice maker assembly in a freezer compartment of a refrigerator, wherein the fill tube functions to transport liquid from a reservoir to a mold The freezer includes an outer wall spaced apart from an inner wall, and a plenum formed therebetween An opening is formed within the inner wall, through which the fill tube extends with a desired clearance. Warm air generated by a defrost cycle passes through the clearance in the inner wall and around the fill tube, thereby warming the fill tube

In addition, the fill tube is formed with vents to allow active ventilation of the fill tube in order to prevent ice formation within the fill tube. Particularly, warm air generated by a defrost cycle is allowed to enter the vents formed within the fill tube to prevent freezing of the fill tube The fill tube is also exposed to dehumidified freezer air from behind the inner wall The dehumidified freezer air helps to prevent ice formation on the surface of the fill tube, as well as ice restrictions within the fill tube.

Additional objects, features and advantages of the present invention will become more readily apparent from the following detailed description of a preferred embodiment when taken in conjunction with the drawings wherein like reference numerals refer to corresponding parts in the several views

BRIEF DESCRIPTION OF THE DRAWINGS

FIG 1 is a partial sectional view of a refrigerator having a freezer compartment incorporating the ice maker fill tube assembly constructed in accordance with the present invention;

FIG 2 is a perspective view of the fill tube assembly of FIG 1; and

FIG 3 is a cross-sectional view showing the fill tube assembly and a portion of the freezer compartment of FIG 1

DETAILED DESCRIPTION OF THE PREFERRED EMBODIMENT

With initial reference to FIG. 1, a refrigerator 2 includes a cabinet 4 within which is defined a freezer compartment 8. Freezer compartment 8 can be selectively accessed through the pivoting of a freezer door 10 Also provided is a fresh food door 12 which enables access to a fresh food compartment (not shown) As shown, refrigerator 2 constitutes a top-mount model However, as will become fully evident below, the present invention is equally applicable to various types of refrigerators, including side-by-side models

Arranged within freezer compartment 8 is an ice maker assembly 16. In a manner known in the art, ice maker assembly 16 includes an ice maker unit 18 and an ice storage bin 20 Ice maker unit 18 is shown to include a bale arm 26 which is pivotable upward and downward based on the amount of ice retained in storage bin 20. Bale arm 26 is actually pivotally connected to a switch arm 34

Ice maker unit 18 also includes an ice mold 37 In general, this construction, as well as the operation of ice maker unit 18, is known in the art Basically, the flow of water is directed to ice mold 37 by a fill tube 40 to fill up various cavities (not separately labeled) of ice mold 37 in order to produce ice cubes which are deposited into storage bin 20. In a typical ice maker arrangement, when the storage bin 20 has collected a sufficient number of ice cubes, the stored ice cubes will act on bale arm 26 to cause bale arm 26 to be lifted which, in turn, operates on switch arm 34 to de-activate ice maker unit 18 Bale arm 26 is biased downward to an ice making position such that, when a sufficient number of ice cubes are removed from storage bin 20, ice maker unit 18 will be automatically reactivated Since the operation of automatic ice makers are widely known in the art, further details thereof will not be discussed here.

The present invention is particularly directed to aspects of fill tube 40 of overall ice maker assembly 16. As previously mentioned, ice maker assembly 16 is located within freezer compartment 8 Freezer compartment 8 includes an evaporator coil cover 45, which includes air flow openings (not shown), and an insulated rear wall 47 (also see FIGS 2 and 3) which is defined by a freezer liner As best shown in FIG. 3, within cabinet 4, evaporator coil cover 45 and insulated rear wall 47 have a plenum 50 formed therebetween Fill tube 40 extends through insulated rear wall 47, plenum 50,

and evaporator coil cover **45**. More specifically, evaporator coil cover **45** includes an opening **51** through which fill tube **40** passes, with a clearance **52** therebetween.

By positioning fill tube **40** so that it passes through plenum **50** and opening **51** in evaporator coil cover **45** with clearance **52**, fill tube **40** is exposed to active ventilation with dehumidified freezer air. More particularly, air from plenum **50** is directed around fill tube **40** due to clearance **52** between fill tube **40** and evaporator coil cover **45**. Ventilation with dehumidified freezer air sublimates ice from the surface of fill tube **40** and prevents ice restrictions within fill tube **40**. In addition, fill tube **40** is exposed to heat which develops behind evaporator coil cover **45** during a freezer defrost cycle. This heat serves to melt any ice which may form within fill tube **40**.

In accordance with the most preferred form of the invention, fill tube **40** includes a top or upper portion **53** and a bottom or lower portion **54**. The top portion **53** of fill tube **40** includes a plurality of axially spaced vents **55** formed therein. Preferably, vents **55** take the form of elongated slots and fill tube **40** is formed of a flexible PVC material. As shown in FIG. **2**, vents **55** are alternated with cross ribs **57** to help maintain the structure of fill tube **40** while allowing active venting of fill tube **40**. On the other hand, bottom portion **54** of fill tube **40** is solid to allow water to flow through fill tube **40** to an outlet **60**.

As indicated above, when refrigerator **2** performs a defrost cycle, warm air fills plenum **50**. The warm air passes through opening **51** and surrounds fill tube **40**. Warm air generated by a defrost cycle also enters vents **55** formed within fill tube **40** to prevent freezing of water within fill tube **40**. Fill tube **40** is also exposed to dehumidified freezer air from behind inner wall **45** which helps to prevent ice formation on the surface of fill tube **40** and prevents ice restrictions within fill tube **40**. Therefore, with this overall construction, an unobstructed supply of water to make ice cubes is available.

Although described with reference to a preferred embodiment of the invention, it should be readily understood that various changes and/or modifications can be made to the invention without departing from the spirit thereof. In general, the invention is only intended to be limited by the scope of the following claims.

We claim:

1. A refrigerator freezer comprising:

an outer wall spaced apart from an inner wall, said inner wall being formed with an opening; and

an ice maker assembly including:

a mold cavity for collecting liquid to be frozen; and

a fill tube for transporting liquid to the mold cavity, said fill tube including at least one vent formed along its length, wherein the fill tube extends through the opening in the inner wall with a clearance between said inner wall and said fill tube to permit a flow of air about the fill tube through the clearance.

2. An ice maker assembly comprising:

a mold cavity for collecting liquid to be frozen; and

a fill tube for transporting liquid to the mold cavity, said fill tube including at least one vent formed along its length, wherein said ice maker assembly is positioned in a refrigerator freezer having an outer wall spaced apart from an inner wall, said inner wall including an opening through which the fill tube extends, said fill tube extending through the opening with a clearance between said inner wall and said fill tube to permit a flow of the air about the fill tube through the clearance.

3. The ice maker assembly of claim **2**, wherein the at least one vent includes a plurality of axially spaced vents.

4. The ice maker assembly of claim **3**, wherein each of said vents takes the form of a slot.

5. The ice maker assembly of claim **4**, wherein the fill tube includes an upper surface portion and a lower surface portion, said vents being formed in the upper surface portion.

6. A refrigerator freezer comprising:

an outer wall spaced apart from an inner wall, said inner wall being formed with an opening; and

an ice maker assembly including:

a mold cavity for collecting liquid to be frozen; and

a liquid fill tube for transporting liquid to the mold cavity, wherein the liquid fill tube extends through the opening in the inner wall with a clearance between said inner wall and said liquid fill tube to permit a flow of air about the fill tube through the clearance.

7. The refrigerator freezer of claim **6**, wherein the liquid fill tube is formed with a plurality of longitudinally spaced vents.

8. The refrigerator freezer of claim **7**, wherein each of said vents takes the form of a slot.

9. The refrigerator freezer of claim **8**, wherein the fill tube includes an upper surface portion and a lower surface portion, said vents being formed in the upper surface portion.

10. The refrigerator freezer of claim **6**, wherein said inner wall constitutes an evaporator coil cover.

11. The refrigerator freezer of claim **6**, wherein said outer wall constitutes an insulated wall of a freezer liner.

12. A method of preventing ice from forming in an ice maker fill tube of a refrigerator comprising the steps of:

generating a flow of warm air in a plenum located between an inner wall, which is formed with an opening, and an outer wall of a refrigerator freezer compartment by running a defrost cycle in the refrigerator; and

warming the fill tube, that extends through the plenum and the opening in the inner wall, by allowing the warm air to flow around the fill tube through a clearance formed between the fill tube and the opening of the inner wall.

13. The method of claim **12**, further comprising: warming the fill tube by allowing the warm air to enter at least one hole formed within the fill tube.

14. The method of claim **13**, further comprising: allowing the warm air to enter any one of a plurality of axially spaced holes formed along an upper surface portion of the fill tube.

* * * * *

EXHIBIT C

US006915644B2

(12) **United States Patent**
Pohl et al.

(10) **Patent No.: US 6,915,644 B2**
(45) **Date of Patent: Jul. 12, 2005**

(54) **ICE MAKER FILL TUBE ASSEMBLY**

(75) Inventors: **Douglas A. Pohl**, Davenport, IA (US); **William James Vestal**, Monmouth, IL (US); **Kenton John Widmer**, Knoxville, IL (US)

(73) Assignee: **Maytag Corporation**, Newton, IA (US)

(*) Notice: Subject to any disclaimer, the term of this patent is extended or adjusted under 35 U.S.C. 154(b) by 0 days.

(21) Appl. No.: **10/942,994**

(22) Filed: **Sep. 17, 2004**

(65) **Prior Publication Data**

US 2005/0028548 A1 Feb. 10, 2005

Related U.S. Application Data

(63) Continuation of application No. 10/355,085, filed on Jan. 31, 2003, now Pat. No. 6,810,680.

(51) **Int. Cl.**[7] **F25C 5/02**

(52) **U.S. Cl.** **62/71**; 62/420

(58) **Field of Search** 62/71, 74, 75, 62/137, 344, 347, 352, 353, 420; 141/82; 137/588, 592

(56) **References Cited**

U.S. PATENT DOCUMENTS

3,744,270	A		7/1973	Wilcox
3,755,994	A		9/1973	Bidlwala
3,835,661	A		9/1974	Kochendorfer et al.
3,866,434	A		2/1975	Pugh et al.
3,937,032	A		2/1976	Bright
4,013,083	A	*	3/1977	Helbling 132/271
4,020,644	A		5/1977	True, Jr. et al.
4,142,378	A		3/1979	Bright et al.
4,191,025	A		3/1980	Webb
4,265,089	A	*	5/1981	Webb 62/72
4,272,025	A		6/1981	Mazzotti
4,306,423	A	*	12/1981	Webb et al. 62/353
4,341,087	A		7/1982	Van Steenburgh, Jr.
4,366,679	A		1/1983	Van Steenburgh, Jr.
4,412,429	A	*	11/1983	Kohl 62/347
4,452,049	A	*	6/1984	Nelson 62/74
4,628,699	A	*	12/1986	Mawby et al. 62/137
4,632,280	A		12/1986	Mawby et al.
4,635,444	A		1/1987	Mawby et al.
4,680,943	A		7/1987	Mawby et al.
5,160,094	A	*	11/1992	Willis et al. 62/137
5,434,946	A	*	7/1995	Barzilai et al. 392/385
5,894,207	A	*	4/1999	Goings 318/478
5,924,301	A		7/1999	Cook
5,964,617	A		10/1999	Hoang et al.
6,148,624	A		11/2000	Bishop et al.
6,153,105	A	*	11/2000	Tadlock et al. 210/650
6,157,777	A		12/2000	Banks et al.
6,189,966	B1	*	2/2001	Faust et al. 297/180.14
6,196,627	B1	*	3/2001	Faust et al. 297/180.14
6,339,302	B1	*	1/2002	Greenbank et al. 318/103
6,470,701	B2		10/2002	Tchougounov et al.
6,490,873	B2		12/2002	DeWitt et al.
6,574,982	B1		6/2003	Wiseman et al.
2001/0011461	A1		8/2001	Tchougounov et al.

FOREIGN PATENT DOCUMENTS

JP	2-126070		5/1990
JP	405149655	A *	6/1993
JP	405280846	A *	10/1993

* cited by examiner

Primary Examiner—William E. Tapolcai
Assistant Examiner—Mohammad M. Ali
(74) *Attorney, Agent, or Firm*—Diederiks & Whitelaw

(57) **ABSTRACT**

An ice maker assembly in a refrigerator freezer includes a fill tube for transporting liquid to a mold. The freezer includes an outer wall spaced apart from an inner wall, with a plenum formed therebetween. An opening is formed within the inner wall, through which the fill tube extends with a clearance. Warm air generated by a defrost cycle passes through the clearance in the inner wall and around the fill tube, thereby warming the fill tube. In addition, the fill tube includes vents formed therein to allow active ventilation of the fill tube and to prevent ice formation within the fill tube.

13 Claims, 2 Drawing Sheets

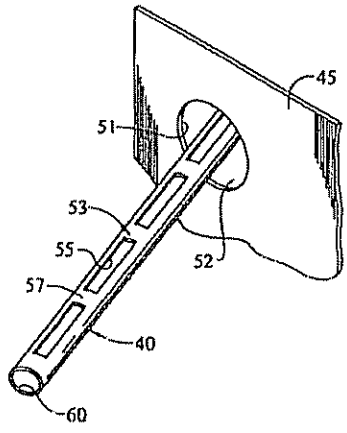

FIG. 1

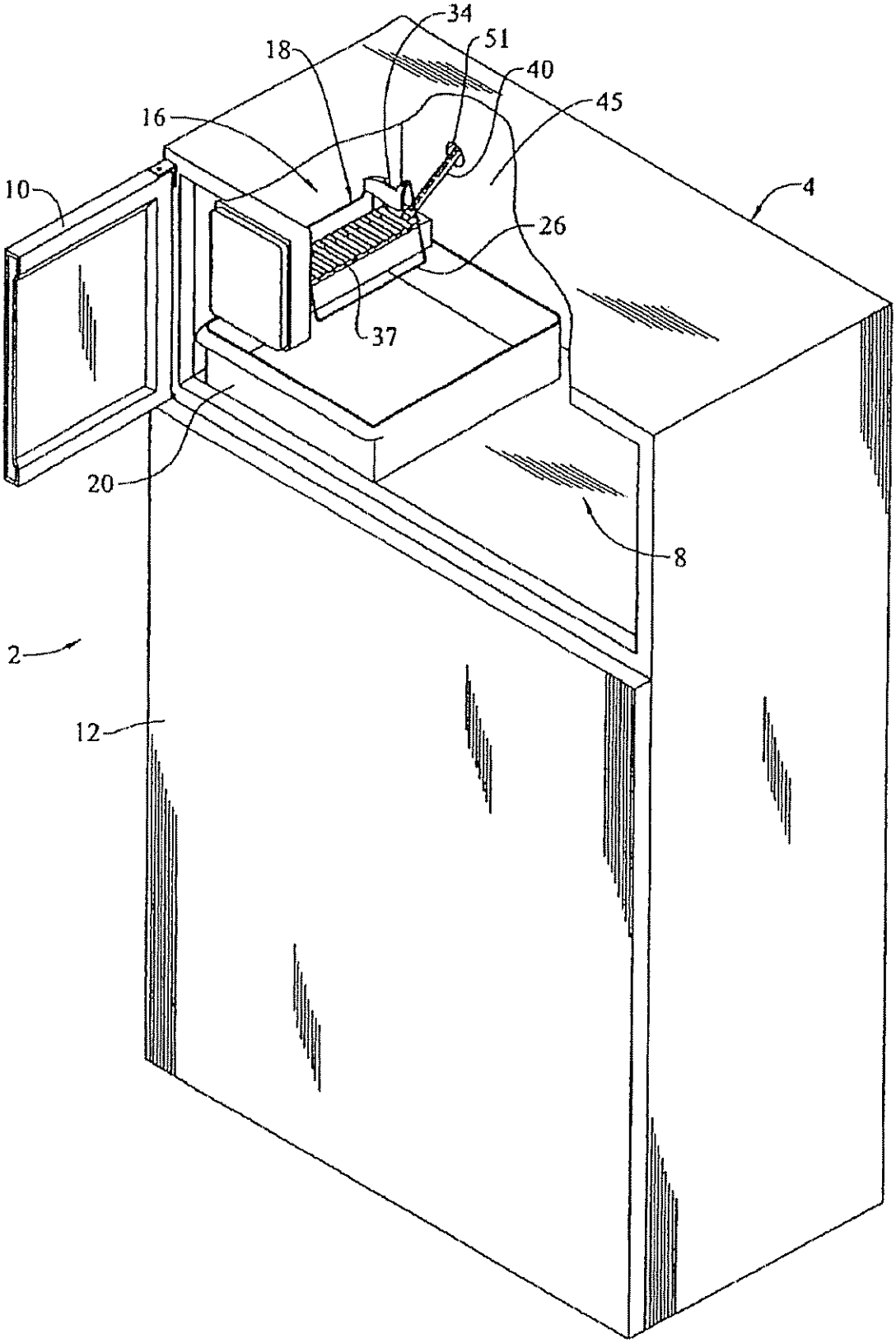

FIG. 2

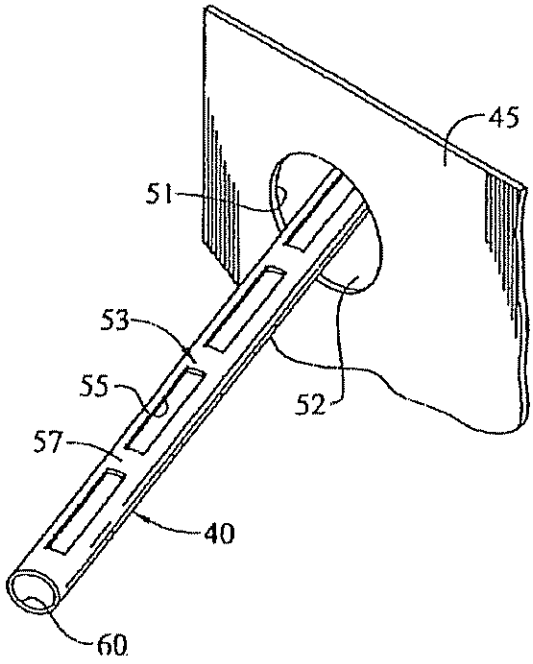

FIG. 3

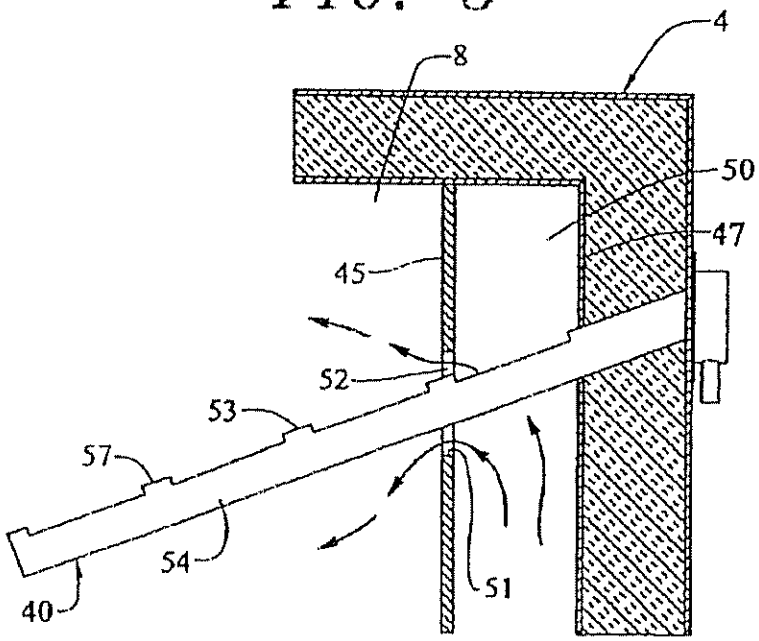

ICE MAKER FILL TUBE ASSEMBLY

CROSS-REFERENCE TO RELATED APPLICATIONS

This application represents a continuation of U S patent application Ser No 10/355,085 filed Jan 31, 2003, now U S Pat No 6,810,680.

BACKGROUND OF THE INVENTION

1 Field of the Invention

The present invention pertains to the art of refrigerators, and, more particularly, to a fill tube arrangement for an ice maker assembly provided in a freezer of a refrigerator.

2 Discussion of the Prior Art

Providing automatic ice makers in household refrigerators has become extremely commonplace Ice makers typically include a tray that is filled by a water fill tube extending through a wall of a freezer compartment

Since the ice maker fill tube extends into the freezer compartment, a problem exists in that water can freeze within the tube and lead to clogging of the tube Several attempts have been made to solve this problem For example, U S Pat No 4,020,644 discloses a water supply line that is maintained in contact with the freezer compartment outer case over a pre-selected length of the fill tube sufficient to prevent freezing of water in the fill tube In addition, the fill tube is insulated with foam material In the arrangement of the '644 patent, there is still a possibility that the tube may freeze More particularly, only a portion of the tube is in heat exchange relationship with the outer case Therefore, any heat provided by the outer case may not be sufficient to prevent freezing of other portions of the fill tube Further, the tube is surrounded by foam and may be difficult to remove if it is necessary to clear an ice blockage within the tube

Another attempt to solve the problem of ice formation in an ice maker fill tube is demonstrated by U.S. Pat No 6,157,777 In this arrangement, an ice maker fill tube includes a heater for maintaining a fluid within the tube at or above a predetermined temperature The fill tube and heater are integrally formed so the heater is protected from physical damage However, this arrangement adds significantly to the costs associated with manufacturing the fill tube and ice maker Additionally, the heater arrangement will certainly affect installation and repair costs associated with the fill tube and ice maker

Based on the known prior art, there is a need in the art for an ice maker fill tube assembly that prevents ice from freezing within the fill tube Further, there is a need for an assembly that is inexpensive to manufacture, easy to maintain, and provides reliable protection against ice build-up

SUMMARY OF THE INVENTION

The present invention is directed to a fill tube arranged for an ice maker assembly in a freezer compartment of a refrigerator, wherein the fill tube functions to transport liquid from a reservoir to a mold The freezer includes an outer wall spaced apart from an inner wall, and a plenum formed therebetween An opening is formed within the inner wall, through which the fill tube extends with a desired clearance Warm air generated by a defrost cycle passes through the clearance in the inner wall and around the fill tube, thereby warming the fill tube.

In addition, the fill tube is formed with vents to allow active ventilation of the fill tube in order to prevent ice formation within the fill tube. Particularly, warm air generated by a defrost cycle is allowed to enter the vents formed within the fill tube to prevent freezing of the fill tube The fill tube is also exposed to dehumidified freezer air from behind the inner wall The dehumidified freezer air helps to prevent ice formation on the surface of the fill tube, as well as ice restrictions within the fill tube

Additional objects, features and advantages of the present invention will become more readily apparent from the following detailed description of a preferred embodiment when taken in conjunction with the drawings wherein like reference numerals refer to corresponding parts in the several views

BRIEF DESCRIPTION OF THE DRAWINGS

FIG 1 is a partial sectional view of a refrigerator having a freezer compartment incorporating the ice maker fill tube assembly constructed in accordance with the present invention;

FIG 2 is a perspective view of the fill tube assembly of FIG 1; and

FIG 3 is a cross-sectional view showing the fill tube assembly and a portion of the freezer compartment of FIG 1.

DETAILED DESCRIPTION OF THE PREFERRED EMBODIMENT

With initial reference to FIG 1, a refrigerator 2 includes a cabinet 4 within which is defined a freezer compartment 8. Freezer compartment 8 can be selectively accessed through the pivoting of a freezer door 10. Also provided is a fresh food door 12 which enables access to a fresh food compartment (not shown) As shown, refrigerator 2 constitutes a top-mount model However, as will become fully evident below, the present invention is equally applicable to various types of refrigerators, including side-by-side models

Arranged within freezer compartment 8 is an ice maker assembly 16. In a manner known in the art, ice maker assembly 16 includes an ice maker unit 18 and an ice storage bin 20. Ice maker unit 18 is shown to include a bale arm 26 which is pivotable upward and downward based on the amount of ice retained in storage bin 20. Bale arm 26 is actually pivotally connected to a switch arm 34

Ice maker unit 18 also includes an ice mold 37. In general, this construction, as well as the operation of ice maker unit 18, is known in the art. Basically, the flow of water is directed to ice mold 37 by a fill tube 40 to fill up various cavities (not separately labeled) of ice mold 37 in order to produce ice cubes which are deposited into storage bin 20. In a typical ice maker arrangement, when the storage bin 20 has collected a sufficient number of ice cubes, the stored ice cubes will act on bale arm 26 to cause bale arm 26 to be lifted which, in turn, operates on switch arm 34 to de-activate ice maker unit 18. Bale arm 26 is biased downward to an ice making position such that, when a sufficient number of ice cubes are removed from storage bin 20, ice maker unit 18 will be automatically reactivated Since the operation of automatic ice makers are widely known in the art, further details thereof will not be discussed here.

The present invention is particularly directed to aspects of fill tube 40 of overall ice maker assembly 16 As previously mentioned, ice maker assembly 16 is located within freezer compartment 8 Freezer compartment 8 includes an evaporator coil cover 45, which includes air flow openings (not shown), and an insulated rear wall 47 (also see FIGS 2 and

3) which is defined by a freezer liner. As best shown in FIG. 3, within cabinet 4, evaporator coil cover 45 and insulated rear wall 47 have a plenum 50 formed therebetween. Fill tube 40 extends through insulated rear wall 47, plenum 50, and evaporator coil cover 45. More specifically, evaporator coil cover 45 includes an opening 51 through which fill tube 40 passes, with a clearance 52 therebetween.

By positioning fill tube 40 so that it passes through plenum 50 and opening 51 in evaporator coil cover 45 with clearance 52, fill tube 40 is exposed to active ventilation with dehumidified freezer air. More particularly, air from plenum 50 is directed around fill tube 40 due to clearance 52 between fill tube 40 and evaporator coil cover 45. Ventilation with dehumidified freezer air sublimates ice from the surface of fill tube 40 and prevents ice restrictions within fill tube 40. In addition, fill tube 40 is exposed to heat which develops behind evaporator coil cover 45 during a freezer defrost cycle. This heat serves to melt any ice which may form within fill tube 40.

In accordance with the most preferred form of the invention, fill tube 40 includes a top or upper portion 53 and a bottom or lower portion 54. The top portion 53 of fill tube 40 includes a plurality of axially spaced vents 55 formed therein. Preferably, vents 55 take the form of elongated slots and fill tube 40 is formed of a flexible PVC material. As shown in FIG. 2, vents 55 are alternated with cross ribs 57 to help maintain the structure of fill tube 40 while allowing active venting of fill tube 40. On the other hand, bottom portion 54 of fill tube 40 is solid to allow water to flow through fill tube 40 to an outlet 60.

As indicated above, when refrigerator 2 performs a defrost cycle, warm air fills plenum 50. The warm air passes through opening 51 and surrounds fill tube 40. Warm air generated by a defrost cycle also enters vents 55 formed within fill tube 40 to prevent freezing of water within fill tube 40. Fill tube 40 is also exposed to dehumidified freezer air from behind inner wall 45 which helps to prevent ice formation on the surface of fill tube 40 and prevents ice restrictions within fill tube 40. Therefore, with this overall construction, an unobstructed supply of water to make ice cubes is available.

Although described with reference to a preferred embodiment of the invention, it should be readily understood that various changes and/or modifications can be made to the invention without departing from the spirit thereof. In general, the invention is only intended to be limited by the scope of the following claims.

What is claimed is:

1. An ice maker assembly comprising:

a mold cavity for collecting liquid to be frozen; and

a fill tube for transporting liquid to the mold cavity, said fill tube including at least one vent formed along its length, wherein the at least one vent includes a plurality of axially spaced vents for a ventilating flow of air.

2. The ice maker assembly of claim 1, wherein each of said vents takes the form of a slot.

3. The ice maker assembly of claim 2, wherein the fill tube includes an upper surface portion and a lower surface portion, said vents being formed in the upper surface portion.

4. The ice maker assembly of claim 1, further comprising: a plurality of cross ribs alternating with the plurality of vents axially along the fill tube.

5. The ice maker assembly of claim 1, wherein the fill tube has an upper portion and a bottom portion, said bottom portion being solid to allow water to flow through the fill tube, said vents being defined along the upper portion of the fill tube.

6. A refrigerator freezer comprising:

an outer wall spaced apart from an inner wall, said inner wall being formed with an opening; and

an ice maker assembly including:

a mold cavity for collecting liquid to be frozen; and

a liquid fill tube for transporting liquid to the mold cavity, wherein the liquid fill tube extends through the opening in the inner wall, said fill tube being formed with a plurality of axially spaced vents for a ventilating flow of air.

7. The refrigerator freezer of claim 6, wherein the liquid fill tube is formed with a clearance between said inner wall and said liquid fill tube.

8. The refrigerator freezer of claim 6, wherein each of said vents takes the form of a slot.

9. The refrigerator freezer of claim 8, wherein the fill tube includes an upper surface portion and a lower surface portion, said vents being formed in the upper surface portion.

10. The refrigerator freezer of claim 6, wherein said inner wall constitutes an evaporator coil cover.

11. The refrigerator freezer of claim 6, wherein said outer wall constitutes an insulated wall of a freezer liner.

12. A method of preventing ice from forming in an ice maker fill tube of a refrigerator comprising the steps of:

generating a flow of warm air in a plenum located between an inner wall, which is formed with an opening, and an outer wall of a refrigerator freezer compartment by running a defrost cycle in the refrigerator; and

warming the fill tube, that extends through the plenum and the opening in the inner wall, by allowing the warm air to enter at least one hole formed within the fill tube.

13. The method of claim 12, further comprising: allowing the warm air to enter any one of a plurality of axially spaced holes formed along an upper surface portion of the fill tube.

* * * * *

EXHIBIT D

US005269601A

United States Patent [19]

Williams et al.

[11] Patent Number: 5,269,601

[45] Date of Patent: Dec. 14, 1993

[54] METHOD AND APPARATUS FOR MAUNFACTURE OF PLASTIC REFRIGERATOR LINERS

[75] Inventors: Stephen G. Williams, Ohio Township, Warrick County, Ind.; David L. Schwartz, Ft. Smith, Ark.

[73] Assignee: Whirlpool Corporation, Benton Harbor, Mich.

[21] Appl. No.: 880,859

[22] Filed: May 11, 1992

[51] Int. Cl.[5] A47B 81/00

[52] U.S. Cl. 312/406.1

[58] Field of Search 312/406, 406.1, 407; 220/467, 440

[56] References Cited

U.S. PATENT DOCUMENTS

2,028,943	1/1936	Money	113/120
2,876,927	3/1959	Henning	220/440
3,088,621	5/1963	Brown	220/440 X
3,221,916	12/1965	Rysgaard	220/440
3,294,462	12/1966	Kesling	312/214
3,719,303	3/1973	Kronenberger	220/9 F
3,813,137	5/1974	Fellwock et al.	312/214
3,835,660	9/1974	Franck	312/407 X
3,940,195	2/1976	Tillman	312/406.1
3,944,111	3/1976	Nonomaque et al.	220/63 R
4,053,972	10/1977	Kordes	29/423
4,130,615	12/1978	Decker, Jr. et al.	264/46.5
4,498,713	2/1985	Fellwock et al.	312/406.1
4,771,532	9/1988	Taylor, Jr. et al.	29/455.1
4,914,341	4/1990	Weaver et al.	312/407
5,033,182	7/1991	Winterheimer et al.	312/406.1 X

FOREIGN PATENT DOCUMENTS

55-78894	6/1980	Japan	220/440
61-265483	11/1986	Japan	312/406
1138951	1/1969	United Kingdom	220/440
9014295	11/1990	World Int. Prop. O.	220/467

Primary Examiner—Rodney M. Lindsey

Attorney, Agent, or Firm—Thomas J. Roth; Stephen D. Krefman; Thomas E. Turcotte

[57] ABSTRACT

Plaques are formed on the sidewalls of the liner in a refrigerator to reduce thermally induced bowing of the cabinet. The plaques may consist of indentations in the liner, which in a preferred form are rectangular, or arrays of multiplanar indentations. The plaques provide increased surface area in the liner to permit thermal expansion without bowing, and also increase the structural rigidity of the liner to resist bowing. Thermal bowing is encountered where there are long unsupported wall surfaces and high temperature gradients across the wall. Therefore the plaques are very effective in the freezer compartment of a side-by-side refrigerator, where bowing can be severe in the absence of the disclosed corrective measure.

25 Claims, 6 Drawing Sheets

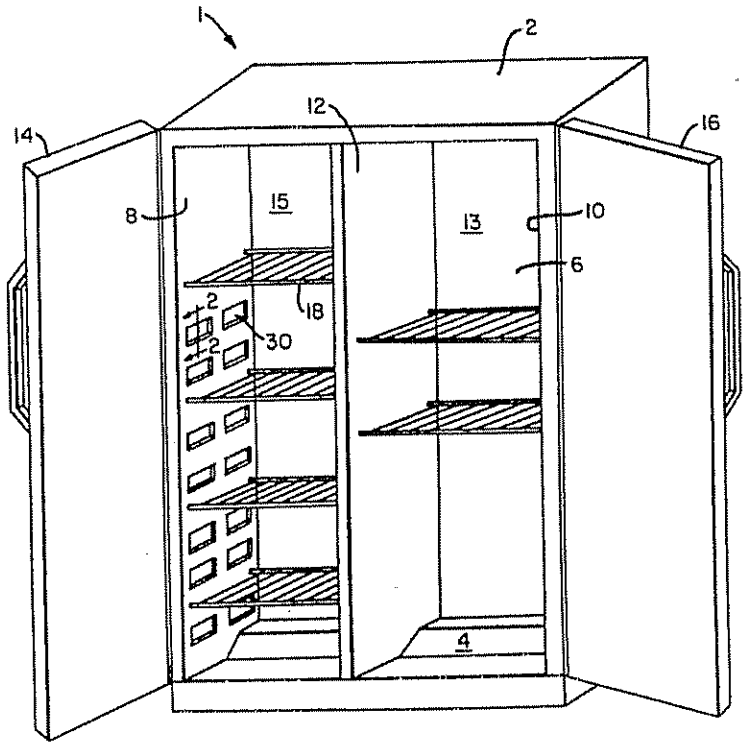

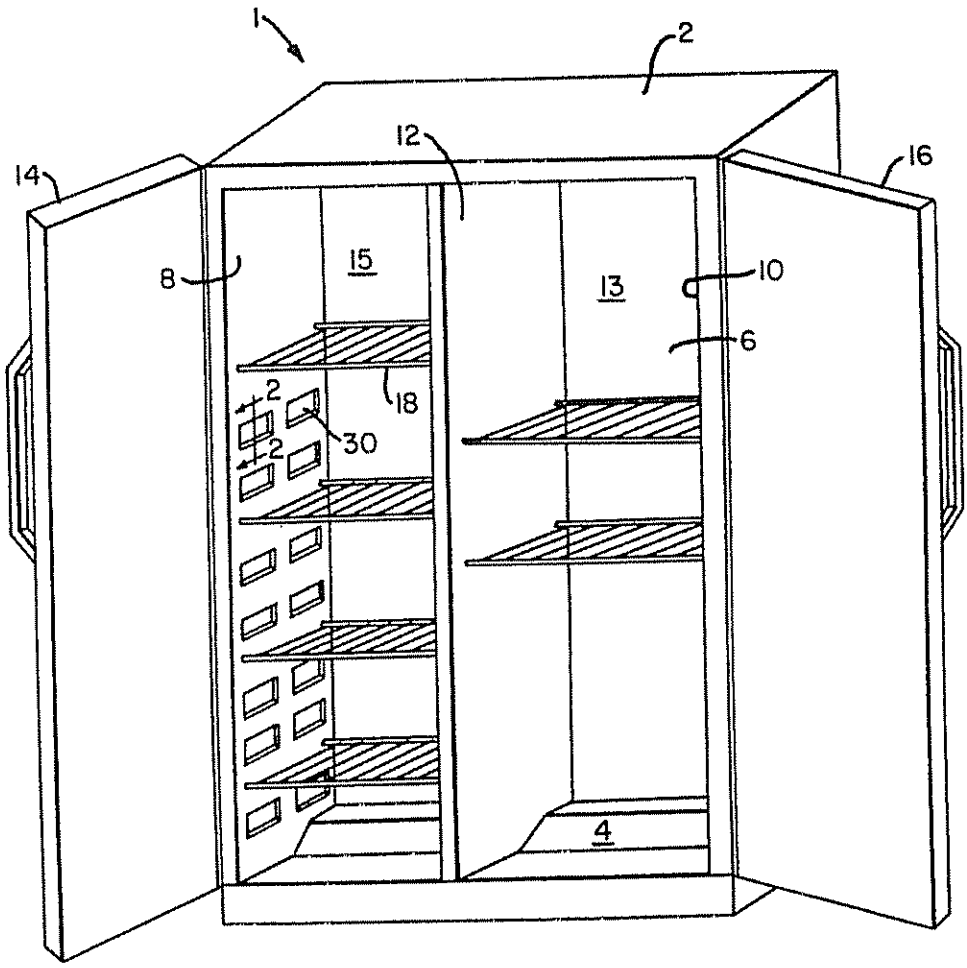

FIG. 1

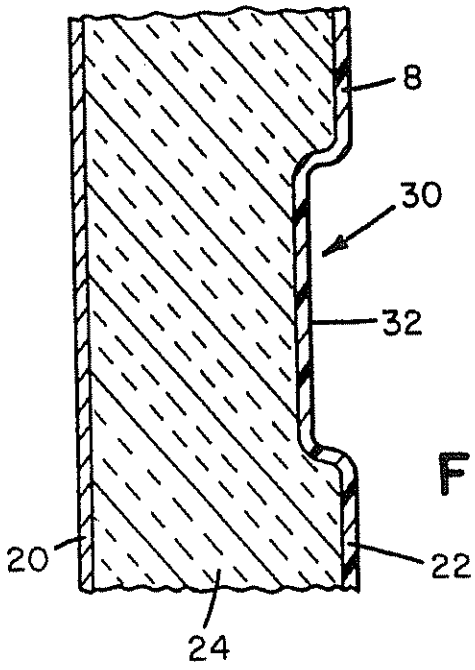

FIG. 2

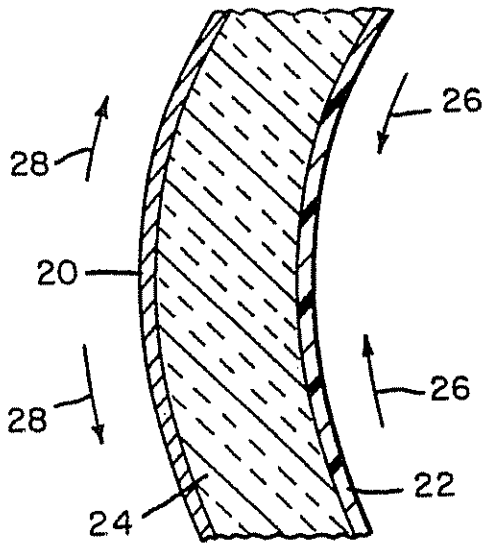

FIG. 3

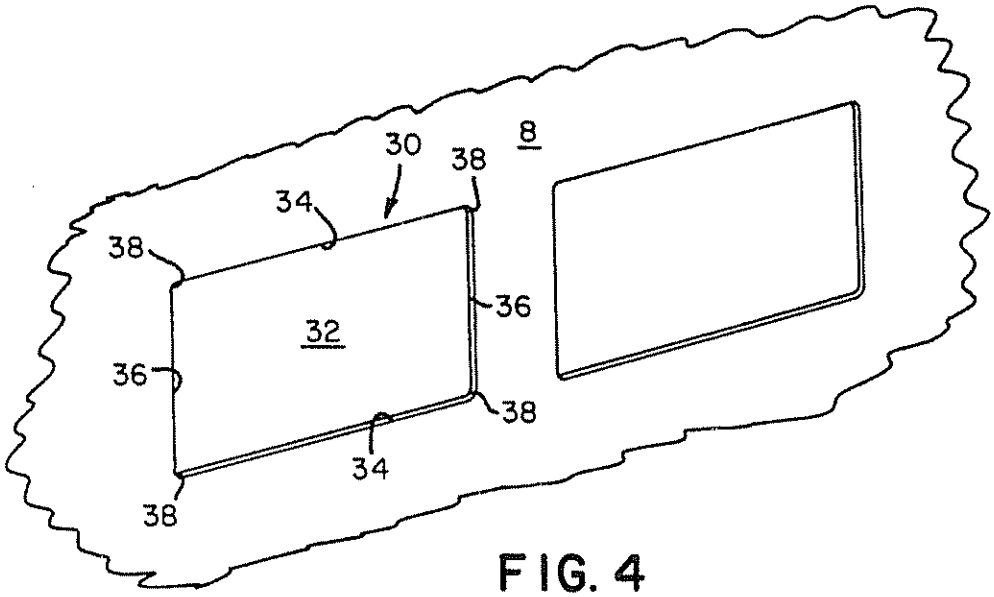

FIG. 4

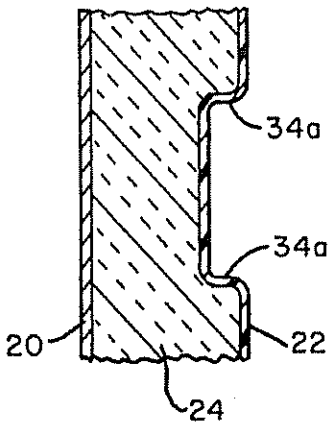

FIG. 5A

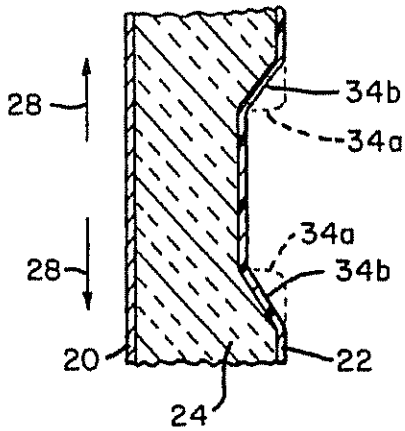

FIG. 5B

FIG. 6

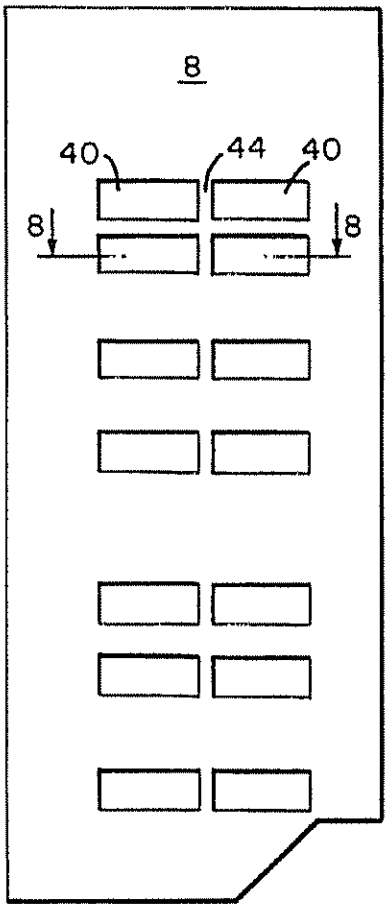

FIG. 7

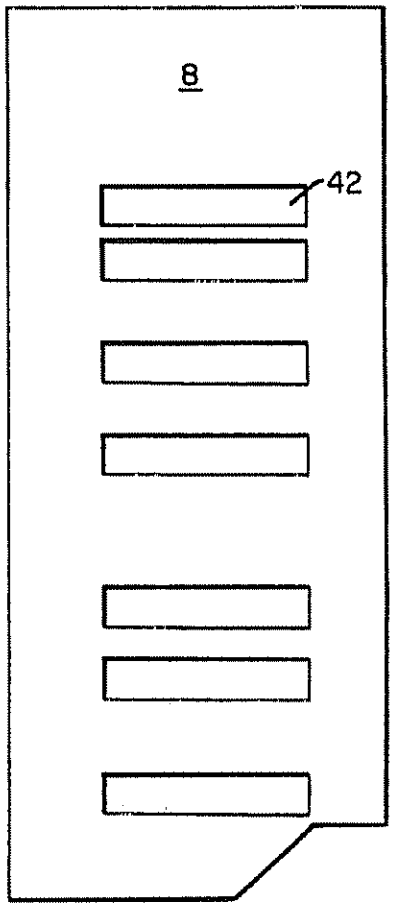

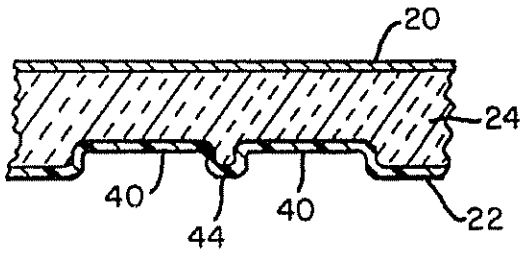

FIG. 8

FIG. 10

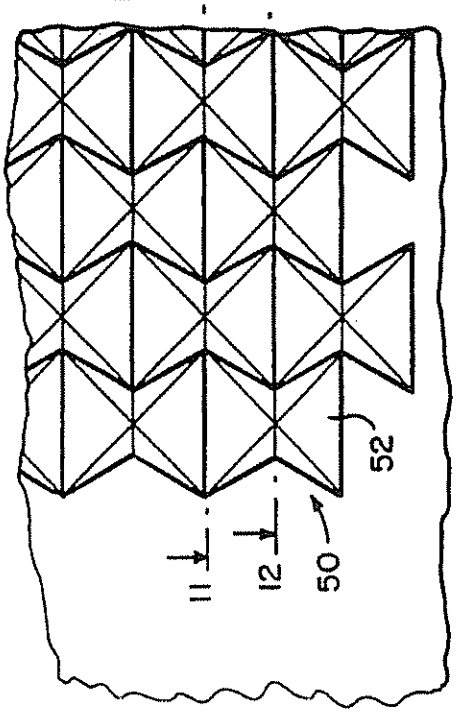

FIG. 11

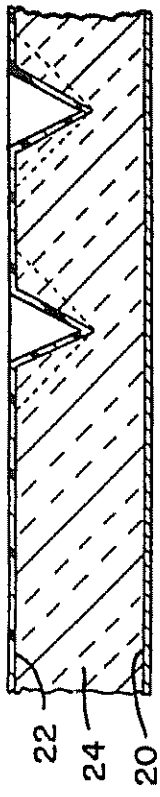

FIG. 12

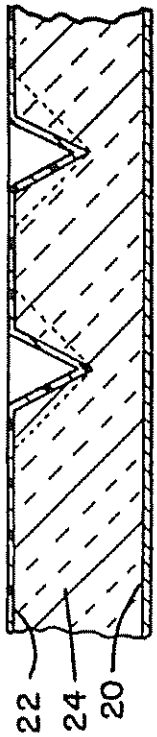

FIG. 9

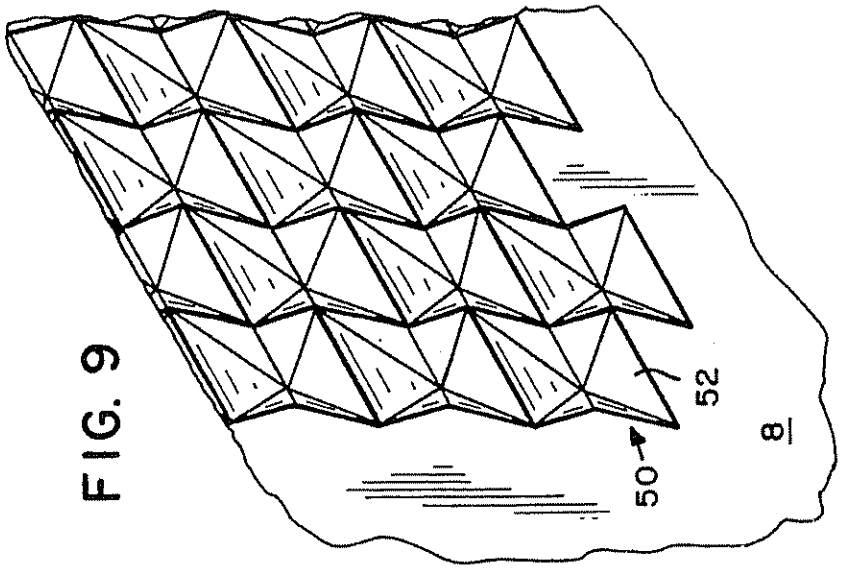

FIG. 14

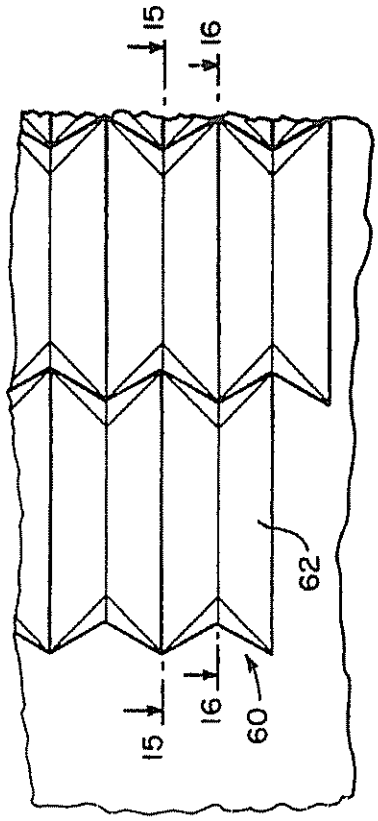

FIG. 15

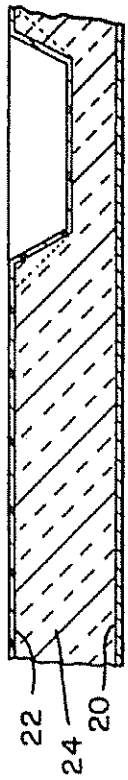

FIG. 16

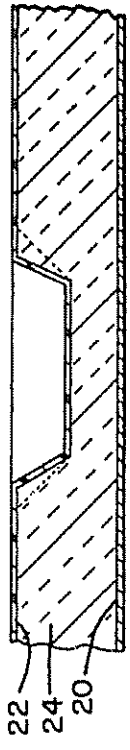

FIG. 13

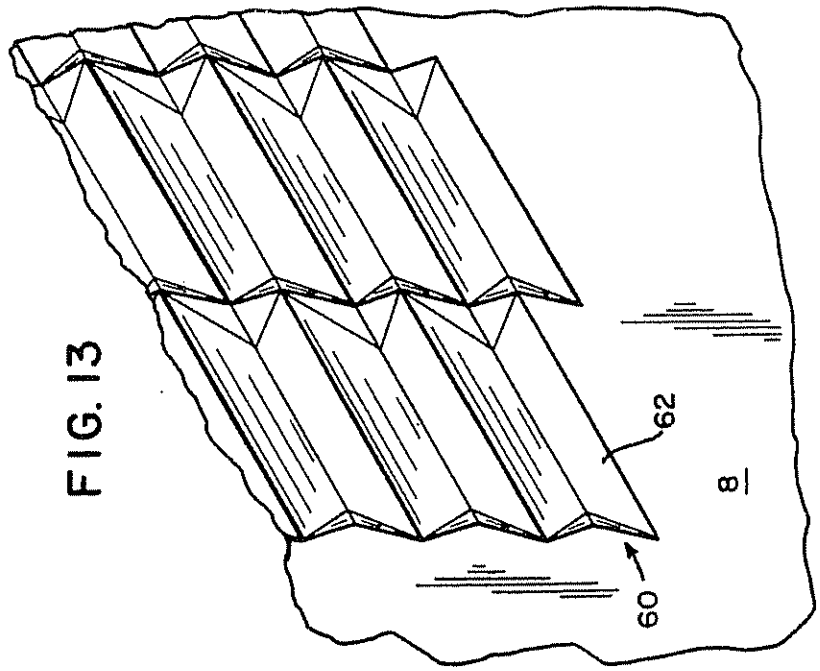

METHOD AND APPARATUS FOR MAUNFACTURE OF PLASTIC REFRIGERATOR LINERS

BACKGROUND

1. Field Of The Invention

The present invention relates to a domestic refrigerator with "plaques" formed in the refrigerator cabinet walls to prevent thermal bowing of the cabinet.

2. Description Of The Prior Art

A current state of the art domestic refrigerator cabinet consists of an exterior prepainted steel shell, an interior plastic liner for dividing the cabinet interior into a fresh food compartment and a frozen food compartment, and a layer of foam between the metal shell and the plastic liner which acts as thermal insulation and provides structural rigidity to the refrigerator cabinet.

The inner liner may be formed to provide any of the common refrigerator configurations, including the top-mount type in which a horizontal separator divides the unit into an upper frozen food compartment and a lower fresh food compartment, the bottom-mount type which is essentially the inverse of the top-mount type, and the side-by-side type in which a central vertical separator divides the unit into side by side fresh and frozen food compartments.

Thermal bowing of the cabinet sidewalls is a serious problem in the above described refrigerator cabinets. It is believed that the temperature gradient which exists across the cabinet wall produces a bi-material effect, where the various materials in the cabinet wall expand or contract by a different amount in response to the temperature gradient. The interior plastic liner is exposed to the cooled interior of the refrigerator compartments, and the liner surface therefore tends to contract slightly. The exterior shell is exposed to a warm ambient temperature, and therefore tends to expand. Although the liner and shell surfaces respond differently to the thermal effects, they are locked together by the foam layer and may not move freely with respect to one another. As a result, the cabinet sidewalls tend to bow outward to compensate for the expansion and contraction of the different layers of the walls.

The bowing is generally more severe in cabinet walls adjacent to the frozen food compartment than in those adjacent to the fresh food compartment due to the greater temperature gradient across the freezer compartment walls. Side-by-side refrigerators are more susceptible to cabinet bowing than top-mount or bottom-mount cabinets because the side-by-side cabinet is divided vertically by a compartment separator wall, and lacks the horizontal divider of the top- or bottom-mount which to some extent ties the cabinet sidewalls together. Bowing of the cabinet sidewalls is of particular concern because the compartment shelves are sometimes mounted between the opposed sidewalls of the compartment, and when the cabinet bow is excessive the shelves are unable to span the increased distance and may collapse. Other detrimental effects of cabinet bowing include misalignment of the cabinet doors and door seals, misactivation of door-actuated switches, and increased energy consumption due to air leakage around the doors.

It is generally known in the art that refrigerator liners may have various forms of embossing and indentations for purposes such as to cover manufacturing imperfections in refrigerator liner sidewalls, to provide incremental increases in refrigerator volume, or to provide enhanced visual aesthetics in the refrigerator liner. However, it was not known previously that the presently disclosed plaques may be used to prevent cabinet bowing. U.S. Pat. No. 2,028,943 (Money) discloses a stamped metal refrigerator liner with raised ridges to increase the rigidity of the sidewalls, however this patent is not directed to reducing deformation of the entire cabinet wall. U.S. Pat. No. 4,053,972 (Kordes) shows a refrigerator door with apparently decorative rectangular liner indentations. U.S. Pat. No. 4,498,713 (Fellwock et al) discloses horizontal and vertical stress-relief ribs in a refrigerator cabinet liner. U.S. Pat. No. 4,914,341 (Weaver et al) discloses that horizontal ribs in a refrigerator door liner are effective to reduce door liner stress.

SUMMARY OF THE INVENTION

To overcome the problem of thermally-induced cabinet bowing, plaques are formed on the plastic inner liner. Each plaque consists of an indentation in the plastic inner liner in the direction of the foam insulation layer. The plaques are preferably rectangular in shape, and may be located in various configurations on the liner to avoid interfering with shelves and other mechanical components. Alternately, the plaques may consist of arrays of multiplanar indentations arranged on the liner surface.

It is believed that a combination of physical factors contribute to the effectiveness of the plaques at resisting cabinet bowing. First, the plaques increase the surface area of the liner, and the plaque edges act as small hinges, permitting planar surface expansion without causing bowing of the cabinet sidewall. Also, the plaques increase the structural rigidity of the liner and therefore resist thermal bowing.

The preferred embodiment of the present invention includes horizontally aligned pairs of rectangular plaques vertically spaced along the liner sidewall and compartment separator wall in the frozen food compartment of a side-by-side refrigerator. The horizontally aligned pairs of plaques are separated by a narrow vertical channel formed in the liner. Computer-simulated structural testing confirms that the narrow vertical channel provides increased structural rigidity and further resists thermal bowing deformation in the horizontal and vertical directions.

The plaques are also useful in preventing cabinet bowing in the fresh food compartment of a side-by-side refrigerator, as well as in the fresh and frozen food compartments of top-mount and bottom-mount refrigerator cabinets.

DESCRIPTION OF THE DRAWING

FIG. 1 is a front perspective view of a domestic side-by-side refrigerator with liner plaques formed in the sidewalls of the freezer compartment;

FIG. 2 is a partial vertical sectional view through one of the plaques in the exterior wall of the refrigerator cabinet along line 2—2 of FIG. 1;

FIG. 3 is a partial vertical sectional view through one of the exterior walls of an unplaqued refrigerator cabinet illustrating in exaggerated scale the effects of thermally-induced cabinet bowing;

FIG. 4 is a partial perspective view of the liner of a domestic refrigerator showing liner plaques formed in accordance with the present invention;

FIGS. 5(*a*) and 5(*b*) are partial vertical sectional views through one of the exterior walls of the plaqued refrigerator cabinet illustrating in exaggerated scale the expansion-joint effect of the plaque in response to thermal forces, with FIG. 5(*a*) illustrating the normal configuration of the plaque without expansion forces, and FIG. 5(*b*) illustrating the absorption of surface expansion forces without bowing;

FIG. 6 is an elevational view of one sidewall of the frozen food compartment liner in a side-by-side refrigerator showing the preferred embodiment for the placement of plaques on the wall;

FIG. 7 is an elevational view of the frozen food compartment liner in a side-by-side refrigerator showing an alternate embodiment for the placement of plaques on the wall;

FIG. 8 is a partial horizontal sectional view of the preferred embodiment of FIG. 6 along line 8—8;

FIG. 9 is a partial perspective view of a refrigerator liner showing a first embodiment of an array of multiplanar formations to prevent refrigerator cabinet bowing;

FIG. 10 an elevational view of a portion of an array of multiplanar formations of the type comprising the array of FIG. 9;

FIG. 11 is a sectional view along line 11—11 of FIG. 10;

FIG. 12 is a sectional view along line 12—12 of FIG. 10;

FIG. 13 is a partial perspective view of a refrigerator liner showing a second embodiment of an array of multiplanar formations to prevent refrigerator cabinet bowing;

FIG. 14 an elevational view of a portion of an array of multiplanar formations of the type comprising the array of FIG. 13;

FIG. 15 is a sectional view along line 15—15 of FIG. 14;

FIG. 16 is a sectional view along line 16—16 of FIG 14;

DETAILED DESCRIPTION OF THE PREFERRED EMBODIMENT

FIG. 1 shows a side-by-side refrigerator cabinet 1 consisting of several wall portions, including a top wall 2, a bottom wall 4, a back wall 6, first and second side walls 8 and 10, a compartment separator wall 12 located between the exterior side walls for dividing the cabinet interior into a fresh food compartment 13 and a frozen food compartment 15, and hinged doors 14 and 16 for closing the open fronts of the compartments A number of shelves 18 are typically mounted in the compartments between the opposed sidewalls of each compartment The shelves are mounted by any suitable means, such as by mounting structures, or socket structures protruding from the sides of the compartment walls.

Each of the exterior walls is a multi-layered structure 15 similar to that shown in FIG. 2, which shows a cross section of the freezer compartment sidewall 8 along line 2—2 of FIG. 1. The exterior layer 20 is typically a pre-painted steel shell which forms the exterior wrapper for the cabinet. The interior layer 22 is a plastic thermoformed liner made of high-impact polystyrene (HIPS) or other suitable material. The space between the steel shell and the plastic liner is filled with rigid foam insulation 24. The foam is initially deposited in the space in liquid form, and it then expands to fill the space. The foam eventually hardens and locks the inner liner to the outer shell, providing thermal insulation and structural support for the cabinet walls.

A sealed refrigeration system, generally consisting of a compressor and one or more heat exchange units, is provided to cool the fresh and frozen food compartments to temperatures suitable for the storage of food items. The frozen food compartment 15 is maintained at a temperature well below the freezing point of water, and the fresh food compartment 13 is maintained at a temperature slightly higher than the freezing point of water. Therefore, the differences between the refrigerated compartment temperatures and the room ambient temperature creates a significant temperature differential across the exterior refrigerator cabinet walls, and also across the interior cabinet wall which separates the fresh food and frozen food compartments.

With this significant temperature differential, the refrigerator cabinet walls may be subject to thermally-induced bowing. As illustrated in FIG. 3 in exaggerated scale for clarity, the bi-material effect resulting from the different thermal properties of the cabinet wall materials causes the cooled surface of the interior liner 22 to contract slightly, as indicated by arrows 26, and in response to the relatively warm room ambient temperature causes the surface of the exterior shell 20 to expand slightly, as indicated by arrows 28. As a result, the cabinet sidewalls tend to bow outward. Refrigerator cabinet wall bowing of ½ inch has been observed, and may result in numerous problems in the product operation.

Plaques 30 are formed into the side walls of the refrigerator cabinet to resist thermal bowing of the cabinet walls due to the temperature gradient across the side walls. As shown in FIG 4, the plaques consist of indentations in the plastic inner liner which may be formed simultaneously with the thermoforming of the plastic liner. The plaques are generally rectangular in shape, and have a rectangular planar face 32 offset from the general plane of the plastic liner. Each plaque is bounded by a pair of horizontal edges 34 and a pair of vertical edges 36 which are radiused to provide a smooth transition between the surface of the liner and the surface of the plaque face. The corners 38 of each plaque are rounded to eliminate surface stress on the liner and for improved aesthetics.

The plaque configuration is incorporated into the liner thermoform tooling so that the liner 22 and plaques 30 are formed in a single manufacturing step The liner 22 is then inserted into the formed exterior shell 20, and liquified foam is placed in the space between the liner and shell. The foam 24 expands and hardens in the space, filling the area between the shell, the liner, and the plaques. The rectangular face 32 and the edge portions 36 and 38 of the plaques are surrounded by the foam, as shown in FIG. 2. The resulting refrigerator cabinet is a unitary structural assembly, with the liner, foam, and shell firmly locked together.

It is believed that a number of factors combine to make the resulting plaqued refrigerator cabinet uniquely resistant to thermally-induced bowing. Rather than focus solely on the effect of the plaques on the liner, it is important to view the plaques as they relate to the liner, the foam, and the shell as a unitary structural assembly.

First, the horizontal and vertical edge portions of the plaques, 34 and 36 respectively, function as small expansion joints between the liner surface and the plaque surfaces, and are able to compensate for surface con-

traction and expansion without causing surface bowing. FIG. 5(*a*) illustrates the refrigerator wall configuration in the vicinity of the plaque in its unstressed configuration. As the exterior shell 20 expands, forces 28 are transmitted through the foam layer 24 to the liner 22, creating tension on the liner surface. FIG. 5(*b*) illustrates in exaggerated scale for clarity that the plaque edges are able to flex slightly from their original configuration 34*a* to an extended configuration 34*b* to relieve the surface tension on the liner. Expansion and contraction of the entire cabinet wall assembly can then take place without bowing.

Test results confirm that the plaques are effective as expansion joints to relieve liner surface tension. Table 1 below shows the results of tensile deflection testing on samples of plaqued and unplaqued HIPS refrigerator liners. The unplaqued samples exhibited yield forces which averaged 146,000 psi at 1% tensile deflection. The plaqued samples exhibited yield forces which averaged 32,000 psi at 1% tensile deflection. Because the plaqued liner samples have only 22% of the internal stiffness of the flat unplaqued liner samples, the plaqued material is more resistant to cabinet bowing due to the reduction of internal liner wall stiffness.

TABLE 1

TENSILE DEFLECTION TESTING OF PLAQUED AND UNPLAQUED HIPS LINER SAMPLES

Sample Configuration	Tensile Deflection	Yield Force (psi)
Unplaqued HIPS	1%	146,000 psi
Plaqued HIPS	1%	32,000 psi

Second, the plaqued liner surface 22 is itself inherently more structurally rigid than a comparable unplaqued piece of the same material. The plaque edge portions are angularly offset from the planes of the liner and plaque surfaces, forming beam structures on the liner surface. The horizontal and vertical pairs of plaques edges, 34 and 36 respectively, thus resist bowing about the horizontal and vertical axes of the liner due to this beam effect. When the liner is bonded to the foam 24 and steel shell 20, the entire structural assembly is then more rigid and resistant to bowing.

The plaques 30 then serve both as a structural stiffener to resist bowing deformation, and as liner internal tension relief elements. The physical configuration of the plaques determines their effectiveness in preventing deformation.

Computer finite element analysis testing indicates that the degree of cabinet bowing is inversely proportional to the distance by which the plaque surface is offset from the surface of the liner. Table 2 indicates the relationship between liner plaque depth and percentage decrease of cabinet deformation for a plaque configuration as shown in FIG. 7 compared to a unplaqued liner. A plaque depth of 1/16 inch resulted in a 14.6% decrease in wall deformation over an unplaqued wall, while a plaque depth of $\frac{1}{8}$ inch resulted in a 17.8% decrease in wall deformation. The testing suggests that increasing the plaque depth beyond $\frac{1}{8}$ inch $\frac{1}{4}$ inch, or possibly deeper, would result in further incremental improvements in the resistance to wall deformation. However, these greater plaque depths have not been tested, and may require more significant modification to the liner tooling.

TABLE 2

EFFECT OF PLAQUE DEPTH ON CABINET WALL DEFORMATION

Liner Configuration	Plaque Depth (inches)	Percent Decrease In Wall Deformation
Unplaqued	0.0	0.0%
Plaqued	0.0625	14.6%
Plaqued	0.1250	17.8%

The preferred embodiment of a refrigerator cabinet with liner plaques is shown in FIG. 6. It has been determined that providing horizontally aligned pairs of plaques spaced vertically along the liner wall as shown in FIG. 6 increases the resistance to deformation over a liner having larger single plaques spaced vertically along the wall, as shown in FIG. 7. The preferred embodiment of FIG. 6 is nearly identical to the configuration of FIG. 7, except that the large plaques 42 of FIG. 7 are divided into horizontally-aligned pairs 40 in FIG. 6 by the vertical "channel" 44 formed in the liner. The improved bowing resistance of the preferred embodiment is believed to result from the structural rigidity of the vertical liner channel 44 between the aligned pairs of plaques 40 running the length of the liner wall.

Channel 44 is an uninterrupted planar vertical strip of liner material which separates the individual plaques 40 in each of the horizontally aligned plaque pairs. In the cross-section view shown in FIG. 8, the channel 44 is coplanar with the general plane of the refrigerator liner 8 beyond plaques 44, although the channel may also conceivably be offset from the general plane of the liner.

Table 3 indicates the dramatic decrease in wall deformation resulting from the provision of the vertical channel of FIG. 6. The liner configuration of FIG. 7 with a plaque depth of $\frac{1}{8}$ inch provides a 17.8% decrease in wall deformation over an unplaqued liner. The liner configuration of FIG. 6, which has a plaque depth of $\frac{1}{8}$ inch and vertical spacing of plaques similar to that of FIG. 7, but with the addition of the vertical channel 42 splitting the plaques into horizontally aligned pairs 40, provides a 31% decrease in wall deformation over an unplaqued liner.

TABLE 3

EFFECT OF VERTICAL CHANNEL ON CABINET WALL DEFORMATION

Liner Configuration	Percent Decrease In Wall Deformation
Unplaqued	0.0%
Plaqued, no channel	17.8%
Plaqued with channel	31.0%

FIGS. 9 through 16 are directed to a different type of structure for reducing bowing in a refrigerator cabinet. Both FIGS. 9 and 13 show arrays 50 and 60, respectively, of adjacent identical multiplanar indentations 52 and 62, respectively, in the liner surface 8. FIG. 10 shows how the individual multiplanar indentations 52 fit together to make up the array of FIG. 9. The structure of FIG. 10 consists of 6 planar surfaces which form a hybrid pyramid shape projecting into the foam layer of the refrigerator cabinet wall. FIGS. 11 and 12 are sectional views through the refrigerator cabinet along lines 11—11 and 12—12, respectively, of FIG. 10, and show the details of the liner profile.

FIG. 13 shows an array 60 of differently shaped indentations 62 in liner surface 8. FIG. 14 shows how the

individual multiplanar indentations **62** fit together to make up the array of FIG. **13**. The indentation **62** of FIG. **14** consists of 6 planar surfaces which form an elongated hybrid pyramid shape projecting into the foam layer of the refrigerator cabinet wall. FIGS. **15** and **16** are sectional views through the refrigerator cabinet along lines **15—15** and **16—16**, respectively, of FIG. **14**, and show the details of the liner profile.

In each version of the multiplanar formations shown in FIGS. **9**, **10**, **13** and **14**, the various planar surfaces which comprise the multiplanar formation are capable of flexure with respect to one another about their adjacent edges to absorb thermally induced expansion and contraction of the refrigerator wall structure without bowing. As can be seen from the orientations of the various edges, these formations are capable of flexure in response to diagonal forces as well as horizontal and vertical forces. Arrangement of the individual multiplanar formations in arrays multiplies the effect of the individual structures.

The arrays may be placed in an arrangement similar to the rectangular plaques of FIGS. **6** and **7** to avoid interference with shelf structures and other mechanical components mounted on the refrigerator liner.

The discussions provided in this specification are primarily directed to the use of plaques on side-by-side domestic refrigerators where the problems of cabinet bowing are severe. However, it should be understood that the present invention is not intended to be limited to side-by-side refrigerators, or to domestic refrigeration products in general, and may be useful to resist thermal bowing in a broad array of applications. It is also to be understood that, in light of the above teachings, the preferred configuration of the invention described in this specification is susceptible to various changes of form, proportions, and details of construction, all of which are intended to fall within the scope of the appended claims.

What is claimed is:

1. Thermally-induced bowing reduction means for an insulating wall structure, wherein said wall structure comprises bonded-together layers of an exterior metal shell, an intermediate rigid foam insulating layer, and an interior planar plastic layer, wherein said bowing reduction means comprises at least one plaque formed on said interior plastic layer, said plaque comprising:

a planar surface integrally formed with said interior plastic layer and offset from the plane of said interior plastic layer in the direction of said foam layer by a predetermined distance; and

edge portions defining the boundaries of said planar surface and extending between the planar surface of said plaque and the plane of said interior plastic layer, said edge portions providing:

expansion joints between the plane of said interior plastic layer and the plane of said planar surface such that said edge portions are capable of flexure to absorb thermally-induced contraction and expansion of the interior plastic layer, and

beam elements on said interior plastic layer preventing bowing of said interior plastic layer;

said intermediate foam insulating layer closely embracing said edge portions

2. The bowing reduction means of claim **1** wherein said planar surface of each plaque is generally rectangular in shape.

3. The bowing reduction means of claim **1** wherein said planar surfaces of said plaques are offset from the plane of said interior plastic liner by between 0.0625 and 0.25 inches.

4. The bowing reduction means of claim **2** comprising at least one aligned pair of plaques, said aligned pair comprising first and second plaques disposed adjacent to one another on said interior plastic liner, with said first plaque having an edge portion of said substantially rectangular planar surface adjacent to an edge portion of said second plaque, and said first and second plaques being separated from one another by a channel disposed between said adjacent edge portions of said aligned pair of plaques.

5. The bowing reduction means of claim **4** wherein said channel comprises a surface coplanar with said interior plastic liner surface.

6. The bowing reduction means of claim **5** comprising a plurality of aligned pairs of plaques, each of said aligned pairs comprising a channel disposed between said first and second plaques in said aligned pair, wherein the channels of each of said plurality of aligned pairs are in alignment along said interior plastic liner.

7. An improved refrigerator cabinet structure including first and second vertical sidewalls and an interior cabinet divider wall, where each of said wall structures is formed of bonded together layers comprising a planar layer of interior plastic liner, an opposed planar layer, and an intermediate layer of insulating foam disposed between said interior plastic liner and said opposed layer, wherein said improved refrigerator cabinet includes means to reduce thermally-induced bowing of said walls, said bow-reduction means comprising:

at least one plaque formed in said interior plastic liner, said plaque comprising a substantially rectangular planar surface parallel to the plane of said interior plastic liner and offset therefrom by a predetermined distance in the direction of said intermediate foam layer; and

edge portions defining the boundaries of said substantially rectangular planar surface and extending between the planar surface of said plaque and the plane of said interior plastic layer, said edge portions providing:

expansion joints between the plane of said interior plastic layer and the plane of said substantially rectangular planar surface such that said edge portions are capable of flexure to absorb thermally-induced contraction and expansion of the interior plastic liner surface, and

beam elements on said interior plastic layer preventing bowing of said interior plastic layer;

said intermediate foam insulating layer closely embracing said edge portions.

8. The refrigerator cabinet of claim **7** wherein said opposed planar layer of said cabinet wall is a layer of plastic liner material on said interior cabinet divider wall.

9. The refrigerator cabinet of claim **7** wherein said planar surfaces of said plaques are offset from the plane of said interior plastic liner by between 0.0625 and 0.25 inches.

10. The refrigerator cabinet of claim **7** wherein said opposed planar layer of said cabinet wall is an exterior steel shell of said refrigerator cabinet.

11. The refrigerator cabinet of claim **7** comprising at least one horizontally aligned pair of plaques, with said aligned pair comprising first and second plaques disposed adjacent to one another on said interior plastic liner, with said first plaque in said aligned pair having a

vertical edge portion adjacent to a vertical edge portion of said second plaque in said horizontally aligned pair, and said first and second plaques being separated from one another by a vertical channel disposed between said adjacent vertical edges, with said channel having a surface coplanar with the surface of said interior plastic liner.

12. The refrigerator cabinet of claim 11 where said channel has a surface coplanar with the plane of said interior plastic liner.

13. The refrigerator cabinet of claim 11 comprising a plurality of horizontally aligned pairs of plaques, wherein said individual horizontally aligned pairs of plaques are vertically spaced along the surface of said interior plastic liner.

14. The refrigerator cabinet of claim 13 wherein each of said horizontally aligned pairs includes a vertical channel disposed between said individual plaques in said horizontally aligned pair, wherein the individual vertical channels of each of said plurality of horizontally aligned pairs are vertically aligned along said interior plastic liner.

15. An improved cabinet structure for a side-by-side domestic refrigerator appliance, wherein said cabinet includes first and second vertical outer sidewalls, each of said outer sidewalls formed of bonded together layers comprising a substantially planar metal shell facing the exterior of said cabinet, a substantially planar plastic liner facing the interior of said cabinet, an intermediate layer of insulating foam between said metal shell and said plastic liner, and a vertical compartment separator wall interposed between said first and second outer sidewalls for dividing the interior space of said cabinet into a frozen food compartment and a fresh food compartment, where said separator wall is formed from first and second spaced apart planar layers of plastic liner, with the first of said layers of plastic liner facing the interior of said fresh food compartment, and the second of said layers of plastic liner facing the interior of said frozen food compartment, and an intermediate layer of insulating foam between said first and second layers of plastic liner of said separator wall, wherein said improved side-by-side refrigerator cabinet includes means to reduce thermally-induced cabinet bowing of said sidewalls and said separator wall, said bow-reduction means comprising:

at least one plaque formation on said substantially planar plastic liner, said plaque formation comprising at least one substantially planar rectangular surface formed integrally with said interior plastic liner and offset therefrom in the direction of said foam by a predetermined distance, each of said rectangular surfaces further comprising two vertical edge portions and two horizontal edge portions defining the boundary of said rectangular plaque and extending between the planar surface of said plaque and the surface of said plastic interior liner, said edge portions providing:

expansion joints between the plane of said interior plastic layer and the plane of said substantially rectangular planar surface such that said edge portions are capable of flexure to absorb thermally-induced contraction and expansion of the inter plastic liner surface, and

beam elements on said interior plastic layer preventing bowing of said interior plastic layer;

said intermediate foam insulating layer closely embracing said edge portions

16. The refrigerator cabinet of claim 15 wherein said rectangular planar surfaces of said plaques are offset from the plane of said inner plastic liner by 0.125 inches.

17. The refrigerator cabinet structure of claim 15 wherein said plaque formation comprises a single rectangular plaque, and a plurality of said rectangular plaques are spaced vertically along said interior plastic liner.

18. The refrigerator cabinet structure of claim 15 wherein each of said plaque formations comprises a horizontally aligned pair of plaques, with said aligned pair comprising first and second plaques disposed adjacent to one another on said interior plastic liner, with said first plaque in said aligned pair having a vertical edge portion adjacent to a vertical edge portion of said second plaque in said horizontally aligned pair, and said first and second plaques being separated from one another by a vertical channel disposed between said adjacent vertical edges, with said channel having a surface coplanar with the surface of said interior plastic liner.

19. The refrigerator cabinet of claim 18 comprising a plurality of horizontally aligned pairs of plaques, wherein said individual horizontally aligned pairs of plaques are vertically spaced along the surface of said interior plastic liner.

20. The refrigerator cabinet of claim 19 wherein each of said horizontally aligned pairs includes a vertical channel disposed between said individual plaques in said horizontally aligned pair, wherein the individual vertical channels of each of said plurality of horizontally aligned pairs are vertically aligned along said interior plastic liner.

21. The refrigerator cabinet of claim 15 wherein said rectangular planar surfaces of said plaques are offset from the plane of said inner plastic liner by between 0.0625 and 0.25 inches

22. An improved refrigerator cabinet structure including first and second vertical sidewalls, each of said sidewalls formed of bonded together layers comprising a substantially planar exterior metal shell, a substantially planar interior plastic liner having a general plane, and an intermediate layer of insulating foam, wherein said improved refrigerator cabinet includes means to reduce thermally-induced cabinet bowing, said bow-reduction means comprising:

an array of substantially identical adjacent multiplanar formations of said plastic liner, each of said multiplanar formations comprising:

a predetermined number of adjacent intersecting planar surfaces angularly offset from said general plane of said plastic liner in the direction of said foam, each planar surface comprising at least three linear edge portions including:

a single linear base edge which intersects said general plane along a line segment, and

first and second linear side edges, wherein each of said linear side edges defines the intersection of said planar surface with an adjacent planar surface along a line segment; and

wherein a plurality of said multiplanar formations are formed on said plastic liner surface and are disposed adjacent one another in an array such that at least one base edge of each of said multiplanar formations intersect with a base edge of an adjacent multiplanar formation along a line segment;

and each of said edge portions providing:

expansion joints between the plane of said interior plastic layer and the plane of said substantially

rectangular planar surface such that said edge portions are capable of flexure to absorb thermally-induced contraction and expansion of the interior plastic liner surface, and

beam elements of said interior plastic layer preventing bowing of said interior plastic layer;

said intermediate foam insulating layer closely embracing said edge portions.

23. The improved refrigerator cabinet structure of claim 22 wherein each of said substantially identical multiplanar formations comprises six adjacent planar surfaces, wherein each of said planar surfaces is triangular in shape, and all of said planar surfaces in said multiplanar formation intersect with one another at a single point.

24. The improved refrigerator cabinet structure of claim 22 wherein two of said planar surfaces in each of said substantially identical multiplanar formation comprise four linear edge portions, including a remote edge, wherein said remote edges of both of said four-edged planar surfaces intersect along a line segment.

25. The improved refrigerator cabinet structure of claim 24 wherein each of said substantially identical multiplanar formations comprises six adjacent planar surfaces, wherein

four of said planar surfaces are triangular in shape, and comprise three edges, including a base edge and a first and second side edges, and

two of said planar surfaces are trapezoidal in shape, and comprise four edges, including a base edge, first and second side edges, and a remote edge, and

wherein said remote edges of both of said trapezoidal planar surfaces intersect along a line segment.

* * * * *

EXHIBIT E

US005269154A

United States Patent [19]

Schmidt

[11] Patent Number: 5,269,154

[45] Date of Patent: Dec. 14, 1993

[54] **HEATED ICE DOOR FOR DISPENSER**

[75] Inventor: Christopher G. Schmidt, Knight Township, Vanderburgh County, Ind.

[73] Assignee: Whirlpool Corporation, Benton Harbor, Mich.

[21] Appl. No.: 914,400

[22] Filed: Jul. 17, 1992

[51] Int. Cl.[5] F25D 21/06

[52] U.S. Cl. 62/275; 62/344; 62/389

[58] Field of Search 62/272, 273, 275, 80, 62/377, 344, 389

[56] References Cited

U.S. PATENT DOCUMENTS

2,858,408	10/1958	Barroero	62/275
3,055,193	9/1962	Smith	62/272
3,224,216	12/1965	Crouch	62/275
3,680,329	8/1972	Burtis	62/275
3,813,896	6/1974	Lebahn	62/409
3,942,334	3/1976	Pink	62/344
3,968,660	7/1976	Amann et al.	62/275
4,102,660	7/1978	Beckett et al.	62/344
4,139,763	2/1979	McMullan et al.	219/528
4,142,092	2/1979	Abrams	219/218
4,548,049	10/1985	Rajgopal	62/275
4,555,049	11/1985	Mawby et al.	222/517
4,774,397	9/1988	Grise	219/549
5,029,737	7/1991	Yamamoto	222/526
5,050,777	9/1991	Buchser	222/146.6

Primary Examiner—Henry A. Bennet
Assistant Examiner—William C. Doerrler
Attorney, Agent, or Firm—Thomas J. Roth; Thomas E. Turcotte; Stephen D. Krefman

[57] **ABSTRACT**

A closure is shown for use with an ice dispensing apparatus having an ice chute operatively associated with a discharge opening. The closure includes a door case having a front wall of a size and shape corresponding to the opening and a rearwardly turned perimeter wall connected to the front wall and having an outwardly turned flange. An insulation core is disposed within the perimeter wall rearwardly of the front wall. A gasket engages the opening incident to the closure being in the closed position. A rear wall is provided for substantially covering the opening incident to the closure being in the closed position. A resistance heater is positioned in the door case between the front wall and the insulation to prevent sweating of the closure.

11 Claims, 4 Drawing Sheets

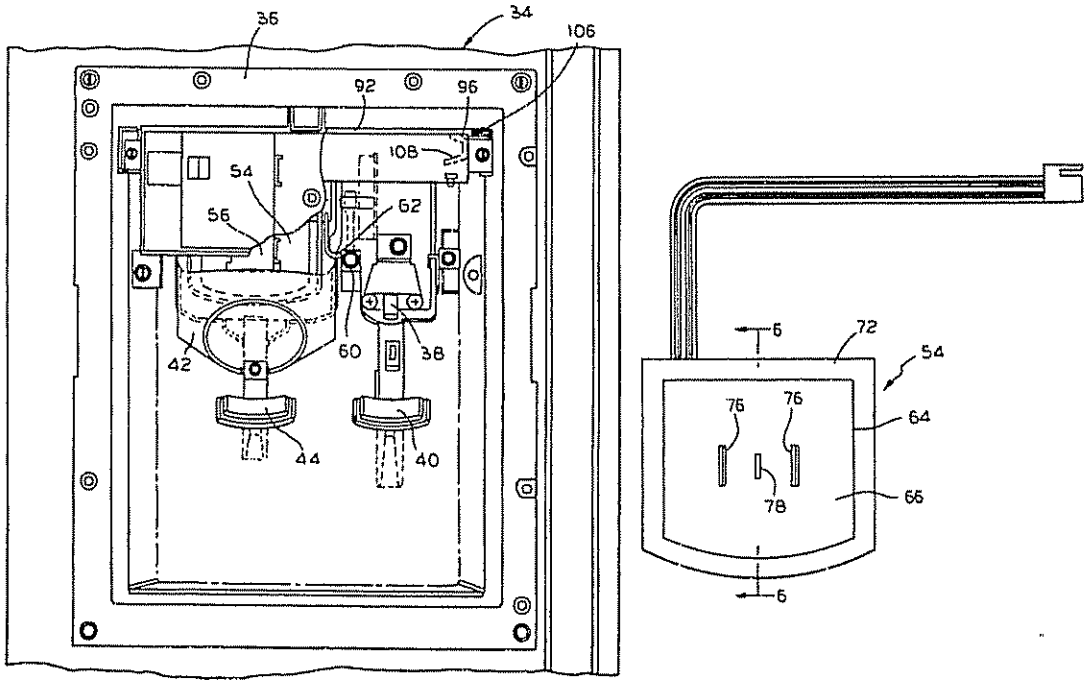

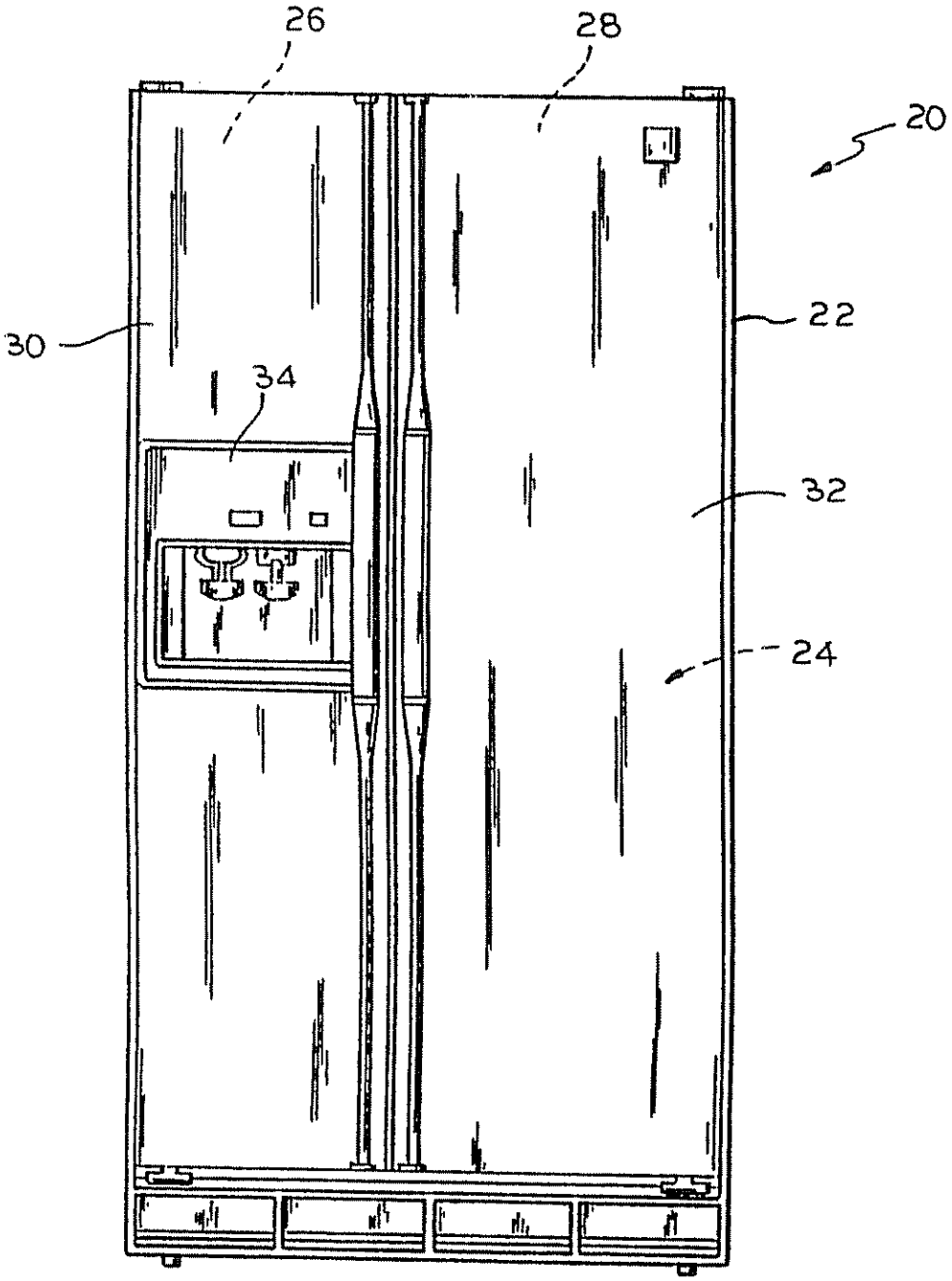

FIG.1

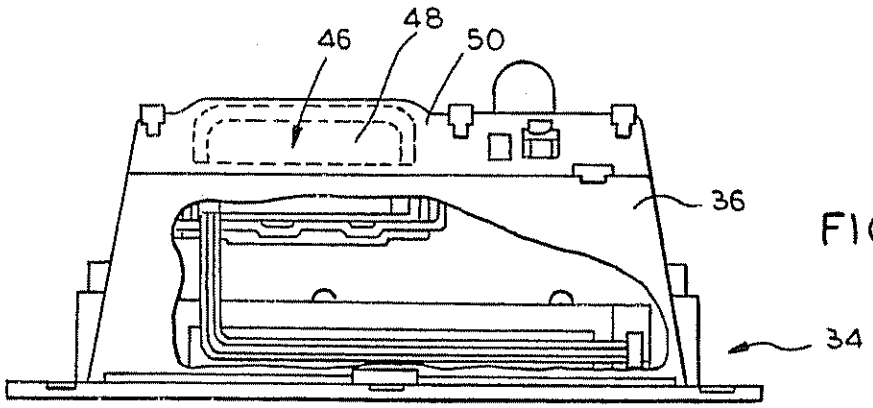

FIG. 3

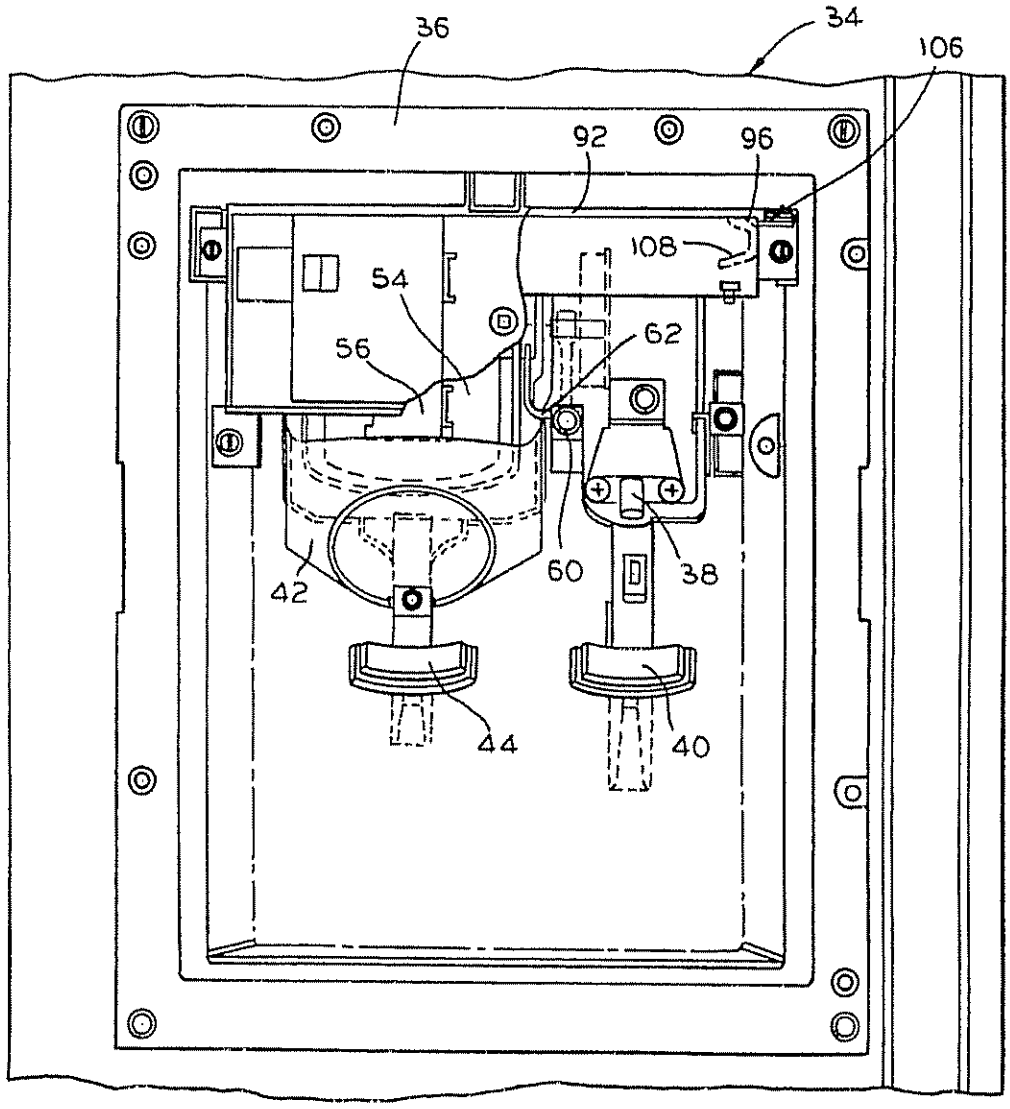

FIG. 2

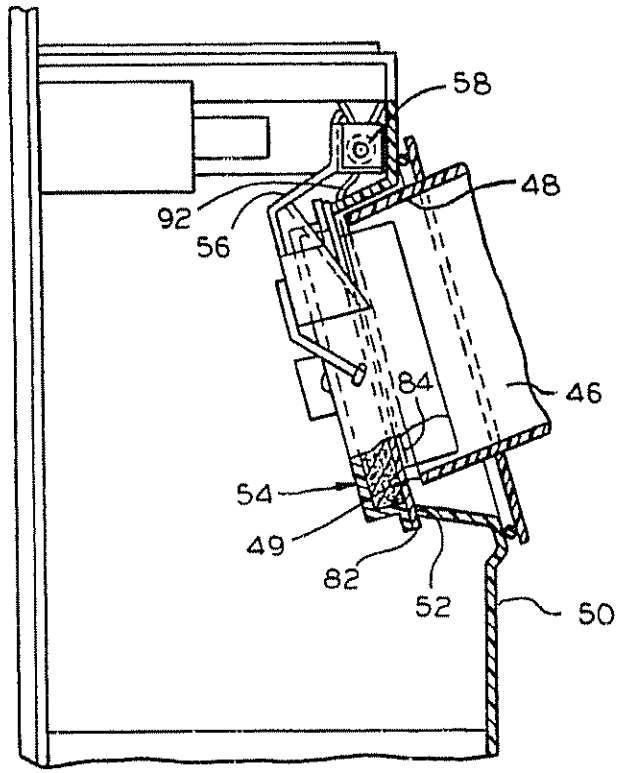

FIG.4

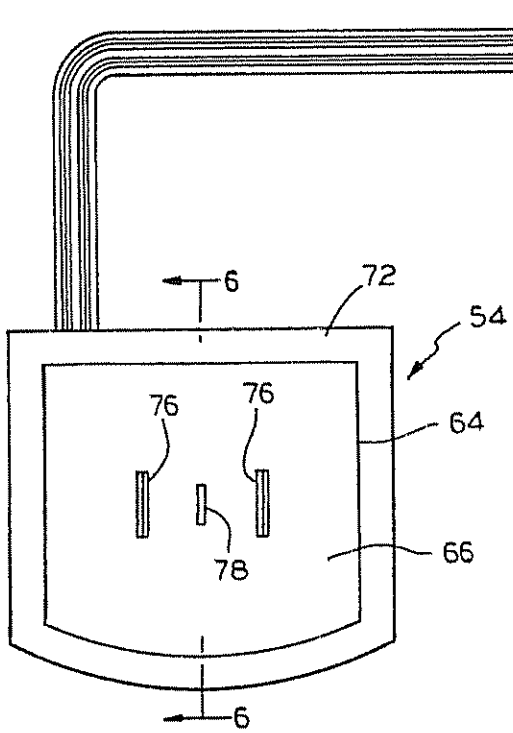

FIG.5

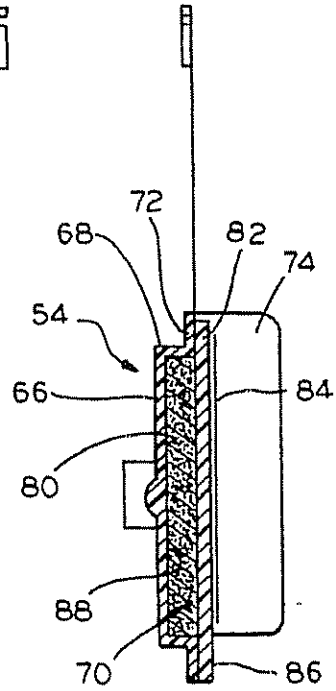

FIG.6

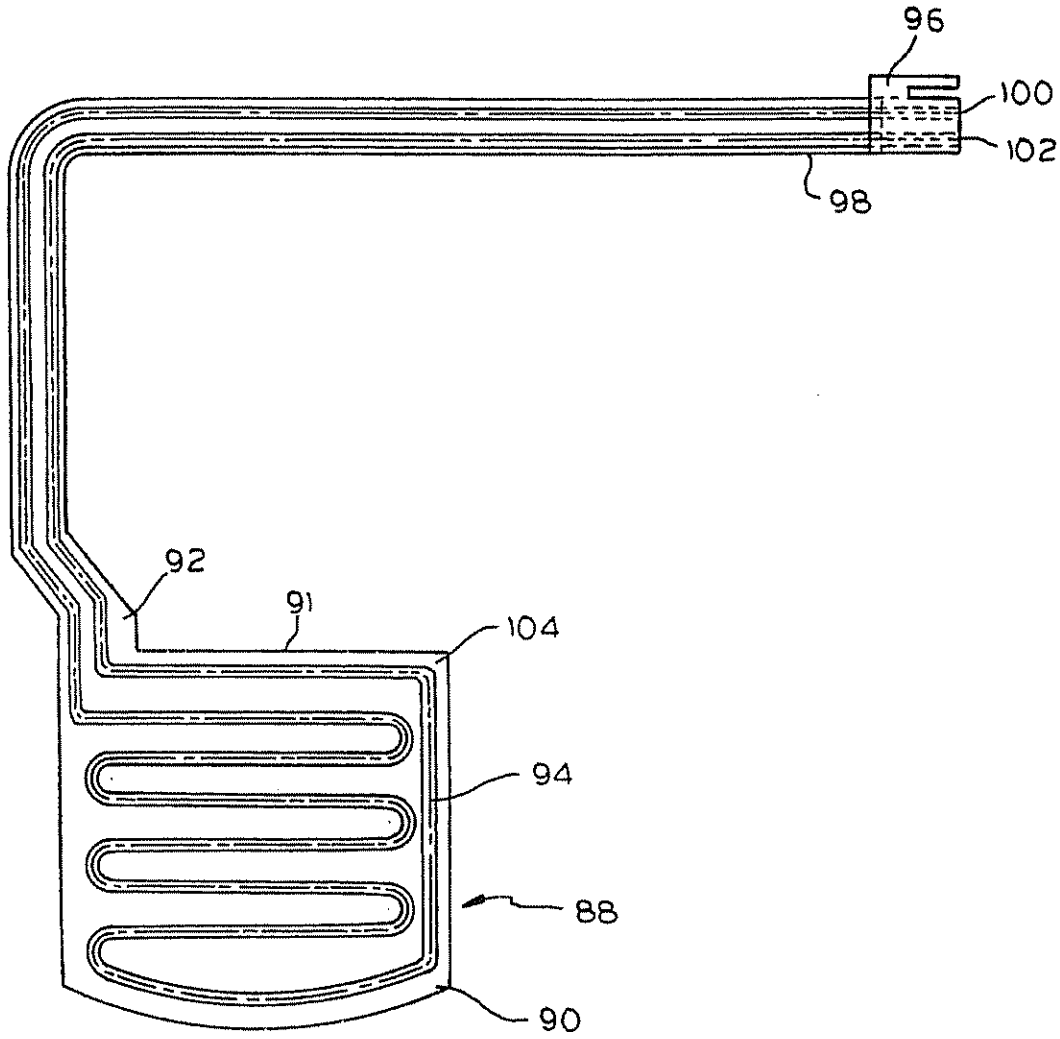

FIG. 7

HEATED ICE DOOR FOR DISPENSER

FIELD OF THE INVENTION

This invention relates to an ice dispensing apparatus and, more particularly, to an improved closure therefor.

BACKGROUND OF THE INVENTION

In one form of an ice making apparatus, an automatic apparatus is provided for forming ice bodies and periodically delivering the formed ice bodies into a subjacent container maintained within a freezer space of a refrigeration apparatus cabinet. In one conventional form, the ice bodies are removed from the container by a user grasping the ice bodies through an open top of the container and removing the desired quantity.

In another form of a refrigeration apparatus, a through-the-door ice dispenser is provided for automatically delivering a desired quantity of formed ice bodies from the container into a suitable receptacle, such as a glass or pitcher. Such an apparatus includes a conveying means for conveying ice bodies stored in the container to a discharge chute in the door. One example of such an automatic ice body dispenser is shown in Buchser U.S. patent application No. 549,651, filed Jan. 2, 1990, which is owned by the assignee of the present invention. As disclosed therein, the ice bodies are delivered from the container to a transfer mechanism by means of an auger which is rotated by a motor at the rear end of the auger. The forward end of the auger is connected to the transfer mechanism which transfers the ice bodies seriatim to the subjacent transfer chute leading to the dispensing area.

A typical conventional through-the-door ice dispenser includes a front opening in the ice chute through which ice pieces are delivered in a dispensing operation. The ice pieces may comprise the fully formed ice bodies, or crushed ice. Such an ice dispensing apparatus is shown in Buchser et al, U.S. patent application No. 522,901, which is owned by the assignee of the present invention, and which comprises a closure mounted frontwardly of the opening and being biased to a closed position wherein the closure effectively blocks the opening. An actuator is mounted adjacent the closure for moving the closure to an open position to permit free delivery of ice pieces through the opening as an incident of the actuator being moved from a released position to an actuated position.

Such a closure comprises an insulated well having an outer gasket for sealing engagement with the discharge chute. With such an ice dispensing apparatus, it is possible that external sweating, i e., moisture or condensation, will appear in the ice dispenser area under high temperature or humidity conditions. This sweating results from the relatively low temperature inside the chute and the ambient conditions to which the exterior of the closure is exposed.

The present invention is directed to overcoming one or more of the problems as set forth above.

SUMMARY OF THE INVENTION

There is disclosed herein, in accordance with the present invention, an ice dispenser closure provided with a heater to prevent external condensation.

Broadly, there is disclosed herein an ice dispensing apparatus having an ice chute operatively associated with a discharge opening through which ice bodies are delivered in a dispensing operation. An improvement

therein comprises a closure of a size larger than the discharge opening. Means are provided for mounting the closure frontwardly adjacent the opening and including means for moving the closure between an open position to permit free delivery of ice pieces through the opening and a closed position wherein the closure effectively blocks the opening. A heating means is operatively associated with the closure for heating the closure to prevent sweating thereon.

It is a feature of the invention that a heater is provided internally to the closure.

It is another feature of the invention that the heating means is a resistance heater.

It is still another feature of the invention that the heating means is connected to an external power source, and including a flexible conductor extending between the closure and the source of power.

It is another feature of the invention that the closure includes a door case having a front well having an outwardly turned perimeter flange connected to a rear wall for engaging the opening, and the heating means is disposed between the front well and the rear wall.

There is disclosed herein in accordance with a further aspect of the invention an improvement in an ice dispensing apparatus having an ice chute comprising a generally tubular-like wall portion operatively associated with a discharge opening through which ice pieces are delivered in a dispensing operation. The improvement comprises an ice chute closure including a door case having a front well of a size and shape corresponding to the discharge opening, the well being connected to an outwardly turned perimeter flange. The flange supports a gasket. Means are provided for mounting the closure frontwardly of the opening and being biased to a closed position wherein the closure effectively blocks the opening with the gasket sealing against the wall portion and the baffles being disposed outwardly of the wall portion. An actuator is mounted adjacent the closure and includes means for moving the closure to an open position to permit free delivery of ice pieces through the opening as an incident of the actuator being moved from a released position to an actuated position. A heating means is operatively associated with the ice chute closure for heating said closure to prevent sweating thereon.

More specifically, there is disclosed herein a closure for use with an ice dispensing apparatus having an ice chute operatively associated with a discharge opening. The closure includes a door case having a front wall of a size and shape corresponding to the discharge opening, a rearwardly turned perimeter wall connected to the front wall and having an outwardly turned flange. An insulation core is disposed within the perimeter wall rearwardly of the front wall. A gasket engages the opening incident to the closure being in the closed position. A rear wall is provided for substantially covering the chute opening incident to the closure being in the closed position. Means are provided for adhering the gasket and the rear wall in assembled relation with the flange. A resistance heater is enclosed in the door case to prevent external condensation on the closure.

Further features and advantages of the invention will readily be apparent from the specification and from the drawings.

BRIEF DESCRIPTION OF THE DRAWINGS

FIG. 1 is a front elevation view of a refrigeration apparatus including an ice dispenser closure according to the invention;

FIG. 2 is a front elevation, partially cutaway view of a through-the-door ice dispensing housing of FIG. 1 with a cover plate removed;

FIG. 3 is a top plan, partially cutaway view of the housing of FIG. 2;

FIG. 4 is a partial sectional view, with parts removed for clarity, of FIG. 2 specifically illustrating a closure in the closed position;

FIG. 5 is a front elevation view of the closure of FIG. 2;

FIG. 6 is a sectional view taken along the line 6—6 of FIG. 5; and

FIG. 7 is an elevation view of a resistance heater included in the closure of FIG. 5.

DETAILED DESCRIPTION OF THE INVENTION

With reference to FIG. 1, a refrigeration apparatus 20, comprising a side-by-side refrigerator/freezer, includes a cabinet 22 having a storage space 24. Particularly, the storage space 24 comprises a below-freezing, or freezer, compartment 26, and an above-freezing, or fresh food, refrigerated compartment 28. Access to the compartments 26 and 28 is had through respective freezer and refrigerator doors 30 and 32 hingedly mounted to the cabinet 22, as is well known.

The freezer door 30 is provided with a through-the-door ice and water dispenser 34. The dispenser 34 is contained within a housing 36, see FIGS. 2 and 3, suitably mounted in the freezer door 30. The dispenser 34 includes a water spigot 38 through which water is automatically transferred to a receptacle position therebelow actuating a water dispenser lever 40, and an ice passage 42 through which ice pieces may be automatically transferred upon actuation of an ice dispenser lever 44. In the illustrated embodiment, the ice pieces may be fully formed ice bodies or crushed ice.

Although not shown, the freezer compartment 26 houses a conventional ice making apparatus which delivers ice pieces to a downwardly, forwardly inclined delivery chute 46 in the door 30, see FIG. 4. Particularly, the chute 46 comprises a generally tubular-like wall portion 48 defining a front opening 49 which opens into a discharge opening 52 of a rear wall 50 of the dispenser housing 36 through which ice pieces are delivered in a dispensing operation. The discharge opening 52 is configured to be generally rectangular, except that the bottom edge thereof is curved to facilitate transfer of ice pieces, as is well known.

A closure 54 is mounted frontwardly of the opening 52. Specifically, a mounting structure 56 is pivotally mounted to the housing 36 as at a pivot link 58, and the mounting structure 56 biases the closure 54 to a closed position, illustrated in FIG. 4, effectively blocking the opening 52. As illustrated generally in FIG. 2, the ice dispenser lever 44 is mounted in the housing 36 adjacent the closure 54 and includes an actuator arm 60 for engaging a connecting rod 62 extending sidewardly from the mounting structure 56. As such, movement of the dispenser lever 44 from a released position to an actuated position causes the closure 54 to move to the open position, not shown, to permit free delivery of ice pieces through the opening 52.

The mounting structure 56 and its operation as disclosed herein are for illustration only. For a more complete understanding relative to the operation of the same, reference may be had to Marks U.S. Pat. No. 4,089,436, owned by the assignee hereof. In fact, the particular mounting structure and actuating mechanism may take many known forms and the embodiment disclosed herein is merely a illustrative of one such known form.

In accordance with the invention, the closure 54 prevents external condensation from collecting thereon.

With reference to FIGS. 5 and 6, the closure 54 is illustrated in detail. The closure 54 includes a door case 64 having a front wall 66 of a size and shape corresponding to the discharge opening 52. A rearwardly turned perimeter wall is 68 is connected to the front wall 66 to provide a well 70. A perimeter flange 72 is connected to and extends outwardly from the perimeter wall 68. A pair of baffle walls 74, one of which is shown, are connected to and extend rearwardly from opposite sides of the flange 72. A pair of locking tabs 76 extend frontwardly from the front wall 66 and are used for mounting the closure 54 to the locking structure 56, as disclosed in FIG. 4. A protrusion 78, also on the front wall 66 between the locking tabs 76, rides on the locking structure 56 to allow for limited movement between the closure 54 and mounting structure 56 to insure a proper seal when the closure 54 is in the closed position.

In the illustrated embodiment, the door case 64 is of integral, molded construction, and may be of, for example, A.B.S flame retardant plastic.

In order to minimize heat transfer between the freezer compartment 26 and the outside, the well 70 is filled with a core 80 of insulation. The core 80 may comprise, for example, closed-cell polyethylene foam. The core 80 is flush mounted with the flange 72 and supports a foam pad 82. Particularly, the foam pad 82 is secured using a suitable adhesive to both the flange 72 and the core 80. The foam pad 82 may be, for example, closed-cell polyethylene foam. The pad 82 is slightly larger than the discharge opening 52 so that when the closure 54 is in the closed position, see FIG. 4, the outer edge of the pad 82 engages the same.

An impact shield 84 is secured to the rear surface of the pad 82. Particularly, the impact shield 84 may comprise, for example, a mylar polyester clear film. The shield 84 may be sealed using pressure sensitive adhesive to the pad 82. The impact shield 84 is of a size corresponding to that of the gasket pad 82, but is of a slightly smaller size so that a peripheral, outer edge gasket portion 86 of the pad 82 is exposed.

Thus, when the closure 54 is in a closed position, as illustrated in FIG. 4, the gasket outer edge portion 86 engages the outer edge of the housing 50 at the opening 52 to provide a seal and prevent flow of air between the freezer compartment and ambient. Further, the impact shield 84 minimizes the amount of ice which comes into direct contact with the pad 82 in order to prevent freeze up thereof which would diminish the sealing capability of the pad 82.

When the closure 54 is in the closed position, see FIG. 3, the baffle walls 74 are disposed outwardly of the ice chute wall portion 48. When the closure 54 is moved to the open position, a free delivery of ice pieces is permitted through the opening 52. At the same time, the baffle walls 74 which are positioned on opposite sides of the chute wall portion 48 direct the flow of ice pieces delivered through the opening 52.

In order to prevent external condensation on the closure **54**, a heater **88** is provided in the well **70** sandwiched between the front wall **66** and the insulation core **80**.

With reference to FIG. **7**, the heater **88** is illustrated in detail. The heater **88** is of laminated construction and comprises a pair of laminated plastic sheets **90**. The sheets **90** have a generally rectangular main portion **91**, of a size and shape corresponding to the closure front wall **66**, connected at an upper corner to an elongate, generally L-shaped extending portion **92**. Silkscreened between the plastic sheets **90** is a track **94** of conductive, resistance ink traced thereon in a serpentine configuration. A silver blend of significantly lower resistance is screened on the trailing portion **92**, or areas in which heat is not required A termination stabilizer **96** is secured to the trailer distal end **98** for connection of the opposite ends **100** and **102** of the track **94** to a power source.

An aluminum foil plate, indicated generally at **104**, is provided on a back side of one of the plastic sheets **90**. The foil layer **104** further distributes heat and isolates the heater **88** from the insulator core **80**.

The plastic sheets **90** are flexible. When mounted in the closure, the connecting portion **92** extends upwardly therefrom, see FIG. **4**, so as not to impede with opening and closing movement of the closure **54**. The termination stabilizer **96** is then connected, as at **106**, see FIG. **2**, to suitable supply terminals **108** for powering the same. This provides for continuous energization of the heater trace resistance track **94**.

The heater **88** mounted in the closure **54** has been found to considerably reduce external condensation with a relatively low wattage heater on the order of two watts.

Thus, there is disclosed herein, in accordance with the invention, a closure for use with an ice dispensing apparatus which includes a heater for preventing external condensation.

The disclosed embodiments of the invention are illustrative of the broad inventive concepts comprehended hereby.

I claim:

1. In an ice dispensing apparatus having an ice chute operatively associated with a discharge opening through which ice pieces are delivered in a dispensing operation, the improvement comprising:

a closure of a size larger than said discharge opening;

means for mounting said closure frontwardly adjacent said opening and including means for moving said closure between an open position to permit free delivery of ice pieces through said opening and a closed position wherein said closure effectively blocks said opening; and

heating means operatively associated with said closure for heating said closure to prevent sweating thereon, said heating means comprises a laminated heater consisting of a pair of plastic sheets sandwiching a resistance heater element, said heater element comprises a track of conductive, resistance ink screened on said plastic sheets.

2. The improvement of claim **1** wherein said heating means is movable with said closure and said heating means further comprises a flexible connector for connection to a power source.

3. In an ice dispensing apparatus having an ice chute comprising a generally tubular-like wall portion operatively associated with a discharge opening through which ice pieces are delivered in a dispensing operation, the improvement comprising:

a closure including a door case having a front well of a size and shape corresponding to said discharge opening, said well being connected to an outwardly turned perimeter flange, said flange supporting a gasket;

heating means mounted in said door case for heating said closure to prevent sweating thereon; and

means for mounting said closure frontwardly adjacent said opening and including means for moving said closure between an open position to permit free delivery of ice pieces through said opening and a closed position wherein said closure effectively blocks said opening, said heating means comprises a laminated heater consisting of a pair of plastic sheets sandwiching a resistance heater element, said heater element comprises a track of conductive, resistance ink screened on said plastic sheets.

4. In an ice dispensing apparatus having an ice chute comprising a generally tubular-like wall portion operatively associated with a discharge opening through which ice pieces are delivered in a dispensing operation, the improvement comprising:

a closure including a door case having a front well of a size and shape corresponding to said discharge opening, said well being connected to an outwardly turned perimeter flange, said flange supporting a gasket;

heating means mounted in said door case for heating said closure to prevent sweating thereon;

means for mounting said closure frontwardly adjacent said opening and including means for moving said closure between an open position to permit free delivery of ice pieces through said opening and a closed position wherein said closure effectively blocks said opening; and

a core of insulation disposed in said well rearwardly of said heating means.

5. The improvement of claim **4** wherein said heating means comprises a foil layer on an outer surface in contact with said core of insulation.

6. A closure for use with an ice dispensing apparatus having an ice chute operatively associated with a discharge opening through which ice pieces are delivered in a dispensing operation, the closure being mounted frontwardly of the opening and being biased to a closed position wherein the closure effectively blocks the opening, and an actuator mounted adjacent the closure and including means for moving the closure to an open position to permit free delivery of ice pieces through the opening as an incident of the actuator being moved from a released position to an actuated position, the closure comprising:

a door case having a front wall of a size and shape corresponding to the discharge opening and a rearwardly turned perimeter wall connected to said front wall and having an outwardly turned flange;

heating means mounted in said door case for heating said closure to prevent sweating thereon;

an insulation core disposed within said perimeter wall rearwardly of said front wall;

a gasket for engaging the ice chute incident to the closure being in the closed position;

a rear wall for substantially covering said discharge opening incident to the closure being in the closed position; and

means adhering said gasket and said rear wall in assembled relation with said flange.

7. The closure of claim 6 wherein said heating means comprises a resistance heater.

8. The closure of claim 6 wherein said heating means is movable with said closure and said heating means further comprises a flexible connector for connection to a power source.

9. The closure of claim 6 wherein said heating means comprises a laminated heater consisting of a pair of plastic sheets sandwiching a resistance heater element.

10. The closure of claim 9 wherein said heater element comprises a track of conductive, resistance ink screened on said plastic sheets.

11. The closure of claim 6 wherein said gasket comprises a pad having its outer edges secured to said flange and said rear wall comprises an impact shield secured to a rear surface of said pad wherein only a peripheral edge portion of said gasket is exposed.

* * * * *

EXHIBIT F

US006997526B2

(12) **United States Patent**
Leimkuehler et al.

(10) **Patent No.: US 6,997,526 B2**
(45) **Date of Patent: Feb. 14, 2006**

(54) **REFRIGERATOR DOOR STORAGE SYSTEMS**

(75) Inventors: **Scott W. Leimkuehler**, Swisher, IA (US); **Eric K. Silbaugh**, Cedar Rapids, IA (US)

(73) Assignee: **Maytag Corporation**, Newton, IA (US)

(*) Notice: Subject to any disclaimer, the term of this patent is extended or adjusted under 35 U S C. 154(b) by 0 days.

(21) Appl No : **10/314,703**

(22) Filed: **Dec. 9, 2002**

(65) **Prior Publication Data**

US 2004/0108799 A1 Jun 10, 2004

(51) **Int. Cl.**
A47B 96/04 (2006 01)

(52) **U.S. Cl.** **312/321.5**; 312/405 1

(58) **Field of Classification Search** 312/321 5, 312/404, 405 1, 408

See application file for complete search history.

(56) **References Cited**

U S PATENT DOCUMENTS

2,898,173 A		8/1959	Squire	
3,029,953 A	*	4/1962	Morrissey, Jr	312/321 5
3,817,395 A		6/1974	LeFever	
4,279,397 A		7/1981	Larsson	
4,859,010 A	*	8/1989	Jeziorowski	312/321 5
4,908,544 A	*	3/1990	Lau	312/321 5
4,921,315 A	*	5/1990	Metcalfe et al	312/321 5
5,004,305 A	*	4/1991	Montuoro et al	312/405 1
5,193,892 A		3/1993	Swindel	
5,199,277 A		4/1993	Granstrom et al	
5,226,717 A		7/1993	Hoffman	
5,322,366 A		6/1994	Revlett et al	
5,346,299 A	*	9/1994	Werkmeister et al	312/405 1
5,370,455 A		12/1994	Sedovic et al	
5,375,924 A	*	12/1994	Pohl et al	312/405 1
5,513,910 A		5/1996	Ellingwood et al	
5,685,624 A		11/1997	Lee	
6,231,146 B1	*	5/2001	Dang	312/405 1
6.799,818 B1	*	10/2004	Ahmed et al	312/405 1

FOREIGN PATENT DOCUMENTS

FR 1 116 644 12/1954

* cited by examiner

Primary Examiner—Peter R Brown
(74) *Attorney, Agent, or Firm*—McKee, Voorhees & Sease, P.L.C.

(57) **ABSTRACT**

Devices and methods for reversibly securing a shelf trim piece or the like to a refrigerator door panel. The shelf securing arrangement does not require holes to be disposed in the door panel A positive snap-lock securement is provided

74 Claims, 4 Drawing Sheets

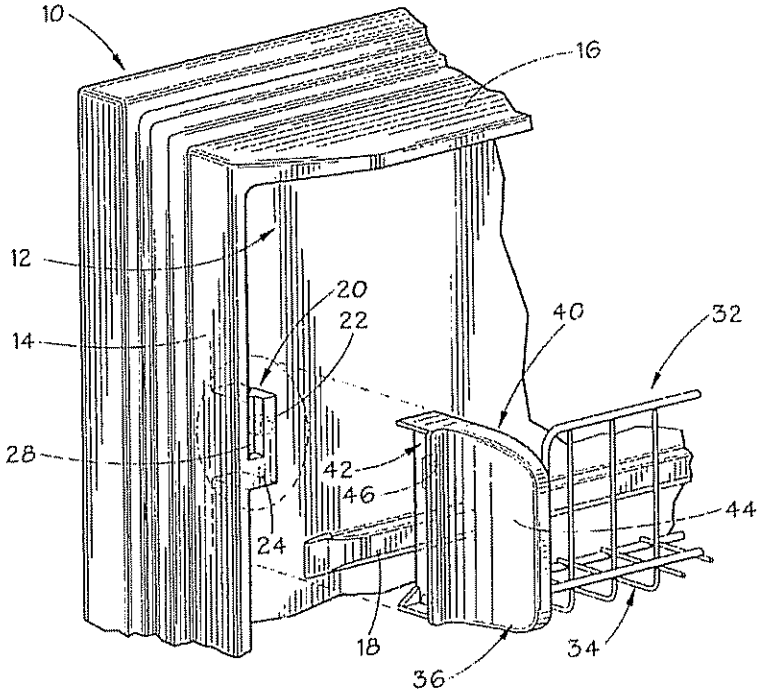

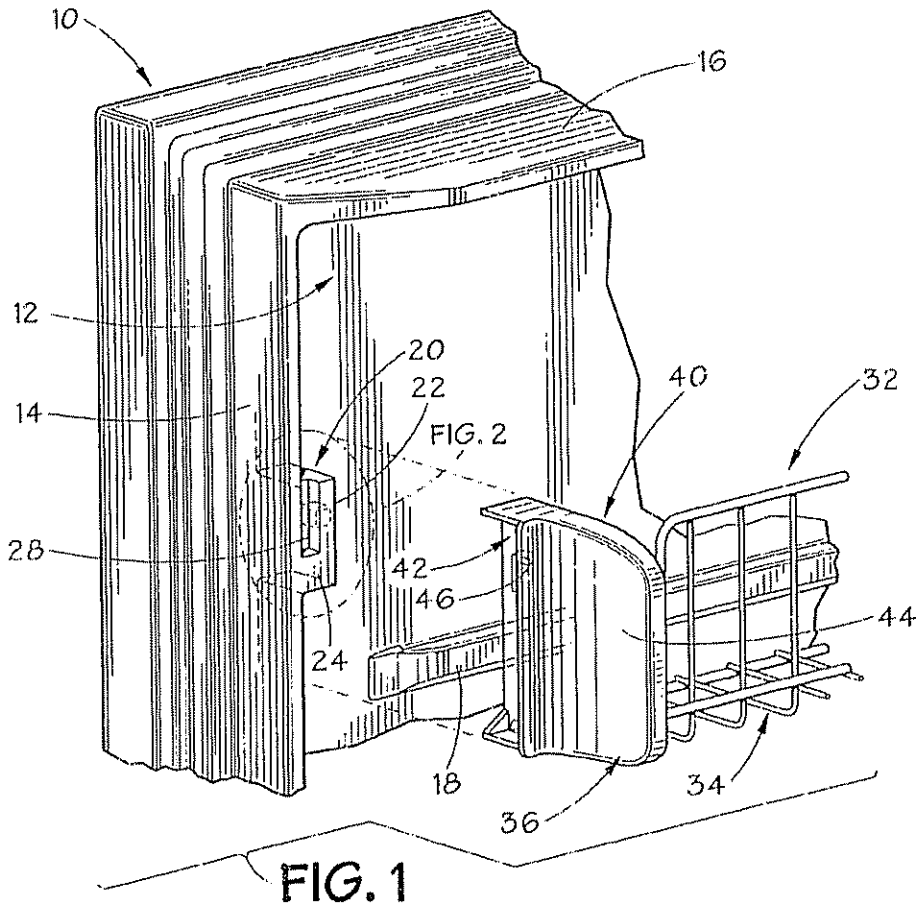

FIG. 1

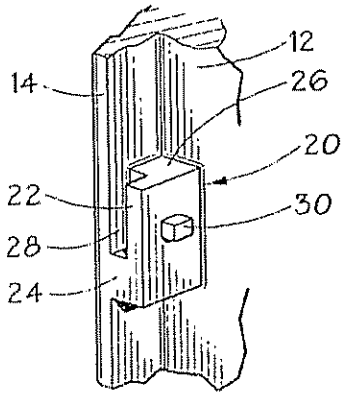

FIG. 2

FIG. 3

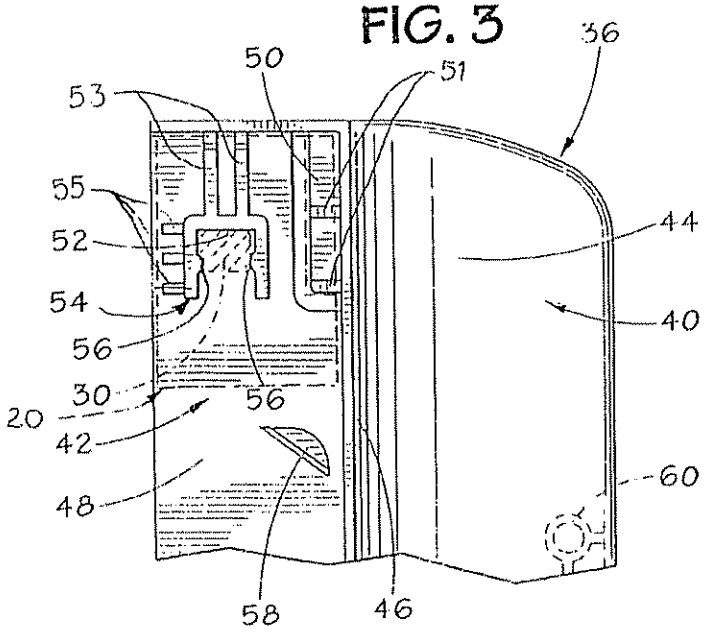

FIG. 4

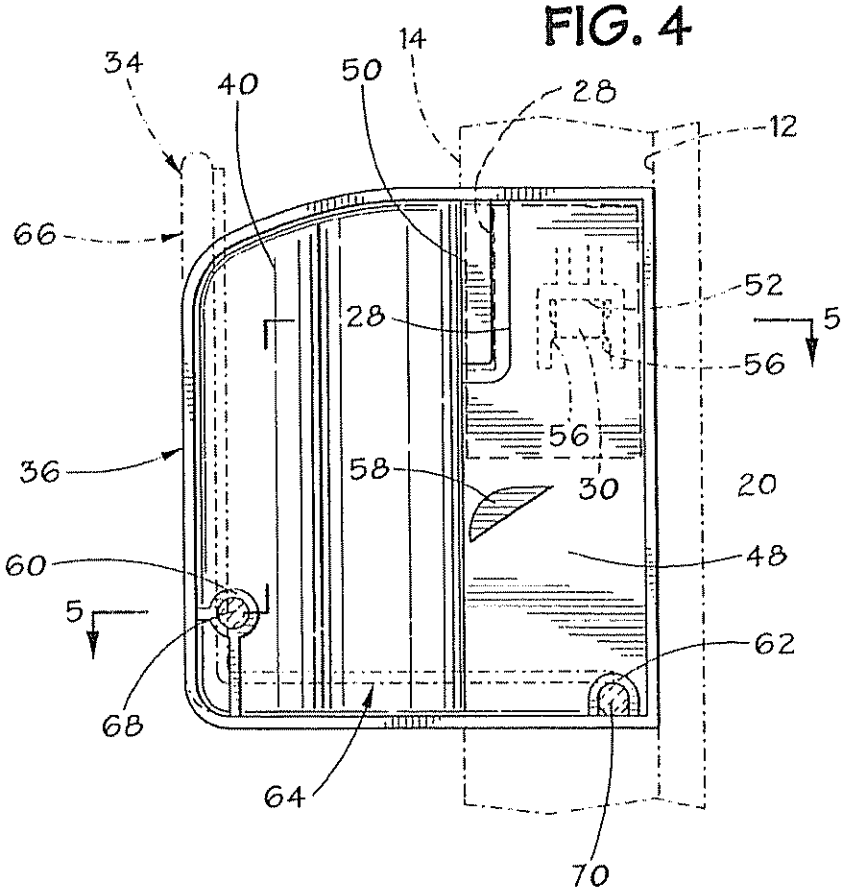

FIG. 6

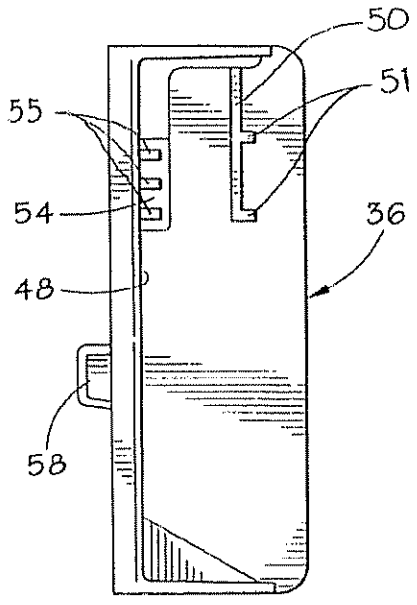

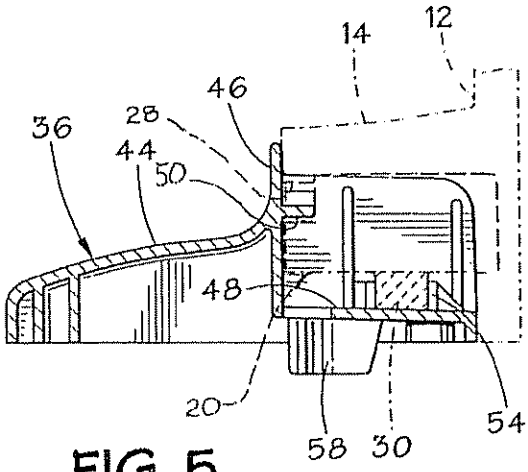

FIG. 5

FIG. 7

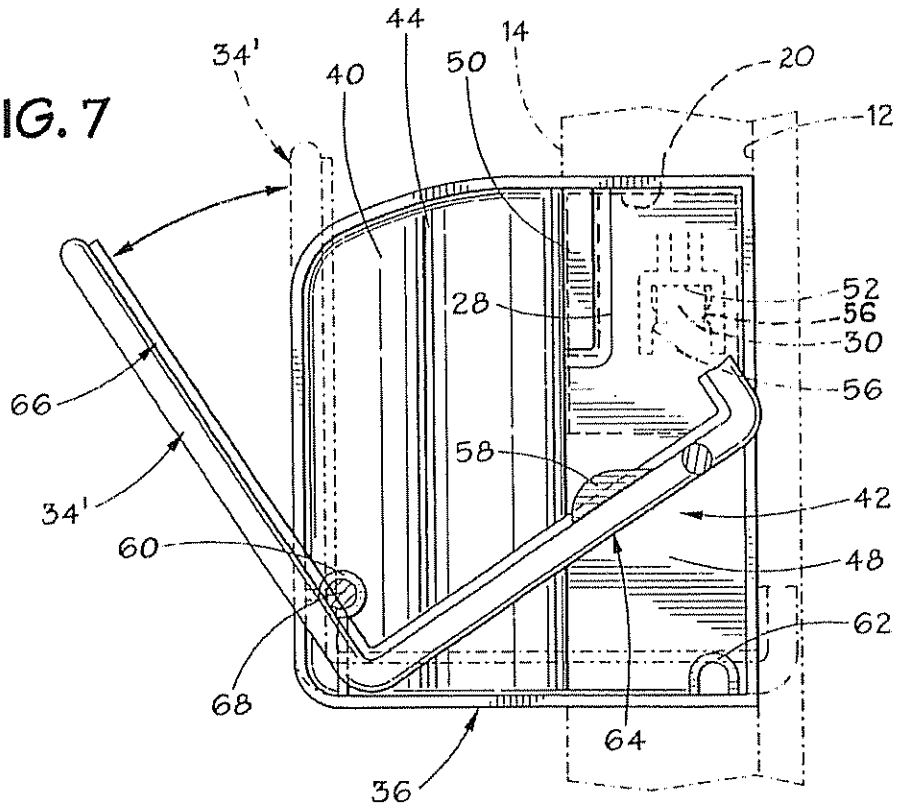

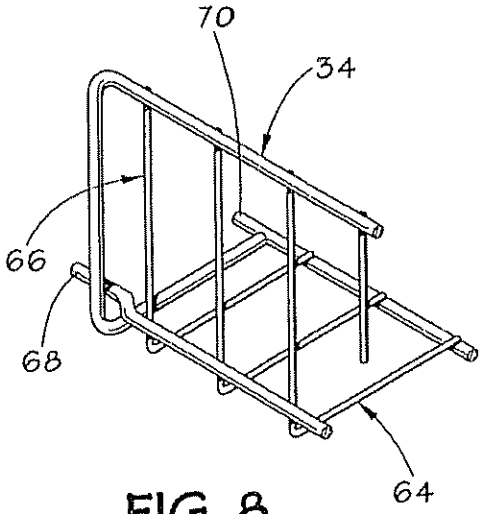

FIG. 8

FIG. 9

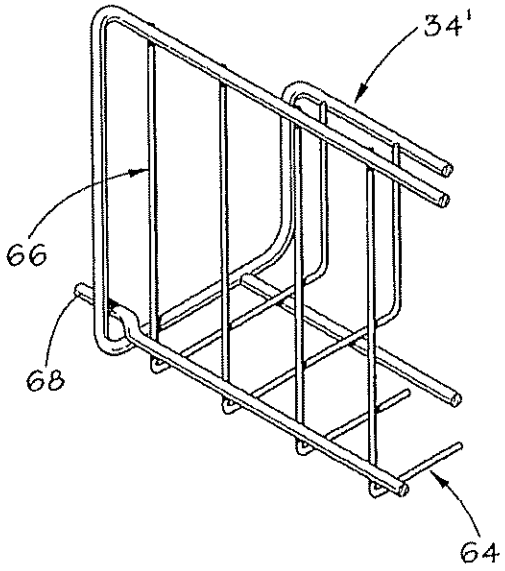

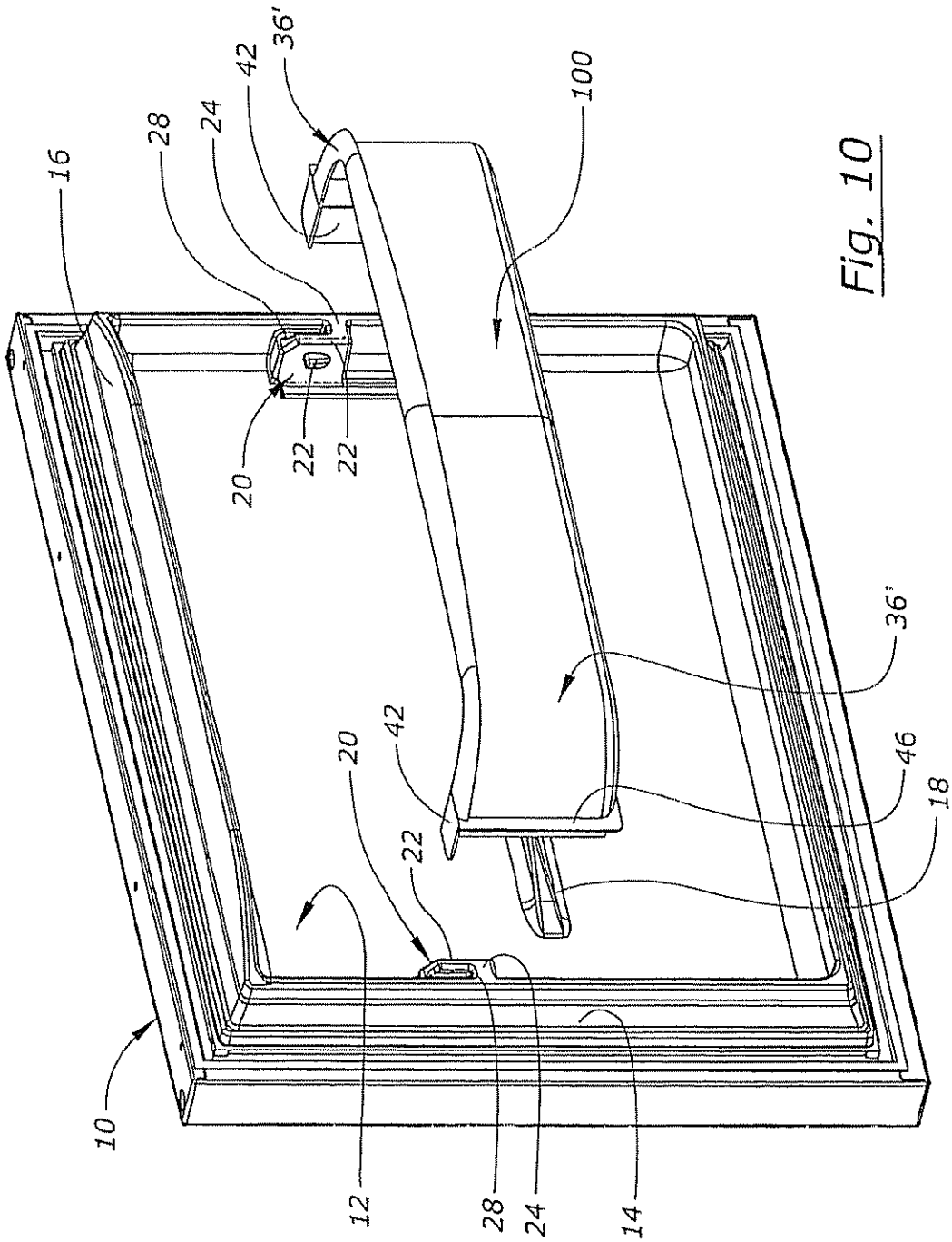

Fig. 10

REFRIGERATOR DOOR STORAGE SYSTEMS

BACKGROUND OF THE INVENTION

1 Field of the Invention

The invention relates generally to storage systems for refrigerator doors and, in particular aspects, to devices and methods for affixing panels, shelves, retainers, and the like to an interior portion of a refrigerator door In other particular aspects, the invention relates to an outwardly tiltable shelf or basket assembly for use in a refrigerator door

2 Description of the Related Art

Contemporary refrigerators have doors that are equipped with shelves and storage areas where food items may be placed and conveniently accessed Although interior door storage systems have been used for a long time, there remains a need for acceptable arrangements for reversibly securing associated components to the door panel These components include shelves, baskets and trim

Storage systems are known that require slots or apertures to be placed in the door panel Complimentary-shaped pins on the storage shelf slide into the slots Such a system is described in U S Pat No 5,042,398 issued to Lau, et al. Another example is found in U S Pat No 5,160,191 issued to Holland, et al This type of securing arrangement is undesirable since the slots form a point of weakness in the door panel Over time, cracks can develop around the slots leading to an eventual failure Further, an opening through the door panel is also undesirable since moisture can enter the opening and can lead to mold and fungus growth within the door resulting in unpleasant smells and generally unhealthy conditions Also, with a foam-in-place door construction, any opening would provide a leakage path

An alternative shelf support system is described in U S Pat No 5,322,366 issued to Revlett, et al A shelf trim piece is reversibly secured to an interior refrigerator door panel using a snap-fit connection The snap-fit connection is formed between sidewardly extending projections located on interior door dikes and the end caps of the trim piece Each of the end caps has a deformable end wall with a ramped portion and an opening disposed therein The trim piece is attached to the door panel by aligning the end caps with the door dikes and then sliding the trim piece horizontally toward the door panel As the ramped portions of the end walls contact the projections on the dikes, the end walls are temporarily deformed to move the openings in the end walls over the projections in a snap-fit manner To remove the trim piece, one must pull the end wall sideways and then slide the trim piece horizontally away from the door panel

This type of arrangement is problematic The use of a deformable end wall together with an opening presents a structural weak point in the trim piece The end wall may be easily broken off, particularly during the operation of removing the trim piece from the door liner This is especially true in reduced wall thickness liners that are now prevalent and necessary to form a channel for mounting a dart-type door gasket.

U.S. Pat No 5,370,455 issued to Sedovic, et al describes a refrigerator door storage assembly wherein a shelf module contains a pair of generally L-shaped slots on either lateral side The liner of the refrigerator door has bosses that nest within the slots when the shelf module is placed onto the door liner This arrangement is also not optimal The nesting arrangement, while permitting a user to easily remove the module, is not secure enough in practice Significant jolts to the door may cause the module to become dislodged, and children can too easily remove the modules

Also, the process of removing a large object, such as a carton of milk, from below the module, may inadvertently release the module from the door Undesirable lateral movement of the shelf module is also possible

Some shelf, basket, or retainer connection arrangements utilize structure which extends forwardly of the door liner dikes This can present issues and problems when trying to design a door liner for use with different types of doors (e g hinged, pullout), or different types of baskets, shelves, retainers, etc, or for different models of refrigerators (refrigerators or freezers) It can be desirable to avoid or minimize such forward extensions Doing so can be advantageous to provide clearance to parts and minimize space taken for retaining geometry It can also facilitate interchangeability for different styles and models of refrigerators, thus reducing capital expenses in design and manufacturing Similarly, it can be desirable to avoid or minimize structure which extends inwardly from the edges of the door liner or the door liner dikes

An improvement that addresses the problems of the prior art would be desirable

It is within the context of the problems and concerns previously described that a need for improvement in the art exists There is a need for a system that can be used to support from the door liner both a structure such as a retaining member, shelve, or basket, and the weight of items placed on the same, and which provides sufficient strength and is durable Further needs exist regarding a system that can be locked in place, but is easy to remove, yet occupies a minimum amount of space

SUMMARY OF THE INVENTION

Devices and methods are described for reversibly securing a shelf trim piece or the like to a refrigerator door panel The shelf securing arrangement does not require holes to be disposed in the door panel A positive snap-lock securement can be provided In described embodiments, a flush-mount flange member is provided that adjoins the door dike to provide an indication of proper horizontal alignment as well as an aesthetically pleasing appearance

In a preferred embodiment, a tilt-out shelf or basket arrangement is reversibly secured to the interior of a refrigerator door. The shelf or basket has a pair of end caps that are reversibly secured to dikes on the door panel. The vertical dikes of the door panel have specially-shaped mounting portions that can include laterally projecting bosses. The mounting portions can be configured to be formed in the door liner in relatively low profile, both relative to forward or inward (medial) directions from the dike The door panel also can have a horizontally disposed support that can adjoin the lower edge of the basket or shelf

In a preferred embodiment, each end cap has a boss contacting portion that includes a vertically oriented, generally U-shaped channel that is open at its lower end The channel is shaped and sized to be complimentary to the boss and contains a raised bump so that when the boss is inserted into the channel a positive snap-lock securement is achieved The end caps may be removed from the door panel by reversing this process

A number of alternative basket, shelf, or other retainer assemblies are described that may be used with the end cap securing arrangement of the present invention In one instance, a wire holding area is fixedly secured between the end caps while, in another, a wire holding area may be

forwardly and rearwardly tilted with respect to the end caps In a further arrangement, a plastic molded shelf having the end cap support geometry molded in place, can be used

BRIEF DESCRIPTION OF THE DRAWINGS

FIG 1 is an isometric, exploded view of a portion of the interior side of a refrigerator freezer door with a basket having a removably affixable end cap constructed in accordance with the present invention.

FIG 2 depicts a portion of one of the door dikes to which an end cap is reversibly affixed

FIG 3 is an exterior side view of an exemplary end cap and in ghost lines illustrating a snap-fit connection with part of the mounting structure on the door liner

FIG 4 is an interior side view, partially in phantom, of a fixed wire basket assembly in secured relation to a door dike

FIG 5 is a cross-sectional cutaway view taken along the lines 5—5 in FIG 4

FIG 6 is a back end-on view of the end cap shown in FIGS 3, 4 and 5

FIG 7 is an interior side view of a tiltable basket assembly secured to the interior of the freezer door

FIG 8 illustrates, in isolation, a portion of the fixed basket assembly.

FIG 9 depicts, in isolation, a portion of the tilt-out basket assembly.

FIG 10 illustrates a single piece molded embodiment incorporating the end cap geometry of FIGS 1–7 at both opposite lateral ends

DETAILED DESCRIPTION OF THE PREFERRED EMBODIMENTS

FIGS 1, 2, 4 and 7 illustrate the interior side of an exemplary refrigerator door 10 of the type used for the freezer section of a domestic refrigerator unit having a lower freezer compartment and an upper refrigeration compartment The door 10 to the freezer compartment is shown in the open position and having an inner plastic liner 12 It is noted that, while the invention is being described with respect to use with the door to a freezer compartment, it could as easily be utilized with the door to a refrigeration compartment The plastic liner 12 has outwardly protruding vertical and horizontal door dikes 14 and 16 around the periphery of the liner 12 It is noted that only one vertical dike 14 and one horizontal dike 16 is shown However, in actuality, these dikes 14 and 16 completely surround the periphery of the liner 12 (see, e g , FIG 10) Therefore, it should be understood that a second dike (not shown in FIGS 1–9) similar to dike 14 is located on the opposite lateral side of the door 10. The inner liner 12 also includes a horizontal support ledge 18 The support ledge 18 extends most of, but not all of the way across the width of the door liner 12

A rectangular mounting portion (one shown at 20) is located on the liner 12 adjacent each vertical dike 14 The mounting portion 20 includes a vertically disposed rectangular plate 22 that is disposed in a parallel relation to the dike 14 The plate 22 is joined to the inner surface of the dike 14 by a bottom web 24 along its lower edge and a lateral web 26 (see FIG 2) along its rear edge. A recess 28 is formed at the forward edge of the portion 20, being defined between the dike 14 and the plate 22 A boss or lug 30 projects inwardly from each mounting portion 20. Each boss 30 has a generally rectangular shape with rounded corners

Mounting portion 20, including boss 30, can be molded and an integral part of door liner 12, and in particular dike

14 of door liner 12 As such, it can be plastic. Mounting portion 20 here is low profile in the sense it does not project forwardly ahead of dike 14, and does not extend very much inwardly or medially towards the dike on the other side of door liner 12 (e g an inch or less).

A basket assembly 32 is removably mountable to the liner 12 of the door 10 in order to retain food items within the door 10 The basket assembly 32 is made up of a wire frame holding portion with an end cap (one shown in FIG 1) at either lateral end There are two alternative embodiments for the wire frame holding portion described herein. FIG 4 illustrates a fixed basket assembly 32 wherein the wire frame holding portion 34 is secured to the end caps 36 so that it does not move respect to the end caps 36 The wire frame holding portion 34 is shown apart from other components in FIG 8 FIG 7 depicts an alternative basket assembly 32' wherein the end caps 36 retain between them wire frame holding portion 34' that is tiltably moveable with respect to the end caps 36 The wire frame holding portion 34' is shown apart from other components in FIG 9.

The construction of an exemplary end cap 36 is shown in FIGS 3, 4, 5, 6 and 7 The end cap 36 is typically a unitarily molded plastic body that includes a forward decorative, or aesthetic, plate portion 40 and a rearward securing portion 42 The aesthetic plate portion 40 presents a curved outer face 44 which, as FIG 5 shows best, provides a forward facing surface 46 located at the rear part of the aesthetic plate portion 40 The rear securing portion 42 of the end cap 36 features a plate member 48 that is shaped and sized to adjoin the plate 22 of the securing portion 20 The rearward side of surface 46 has a shaped tab 50 that is integrally formed with it The tab 50 is shaped and sized to reside within the recess 28 in a downwardly sliding relation when the end cap 36 is secured to the liner 12 As shown in FIGS 3, 5, and 6, tab 50 in this example has a main planar portion generally parallel to plate 48, but has several perpendicular ribs 51 that also fit within recess 28 (such that tab 50 and ribs 51 preferably frictionally fit therein). Ribs 51 can assist in strengthening tab 50 In addition, a substantially U-shaped channel 52 is formed out of raised ridges 54 that project outwardly from the plate member 48. The interior of the U-shaped channel 52 includes a pair of bumps 56 (see FIG 3) that can extend substantially from wall 48 outwardly to the outer edges of raised ridges 48 and can be rounded in profile Strengthening ribs 53 and 55 can be used to deter flexing of and strengthen ridges 48 defining U-shaped channel 52

The channel 52 is shaped and sized to receive therein the boss 30 of the mounting portion 20 of the door liner 12 The bumps 56 restrict passage of boss 30 into and out of the channel 52 in order to create a snap-fit entry The distance between the adjacent-most parts of bumps 56 on opposite sides of channel 52 is less than the widest width of boss 30. Boss 30 can have a opposite forward and rearward substantially flat faces defining the widest width of boss 30 But the lower edges of those opposite sides can be rounded or even tapered inwardly (see, e g , FIG 10). As boss 30 moves into channel 52, boss 30 interference fits through bumps 56, which move slightly outward by slight flexing of ridges 54 Bumps 56 can be positioned so that when boss 30 is fully inserted into channel 52, (FIG 3), the flat opposite faces of boss 30 have moved past bumps 56 and thus boss 30 "snaps" into channel 52 in a basically locked position Alternatively, bumps 56 could be positioned and configured to hold boss 30 in an interference type fit in channel 52

The fit of boss 30 into channel 52 is illustrated in FIGS. 3, 4, 5, and 7 For clarity in the drawings, recess 28 of

mounting portion **20** is shown in ghost lines, indicating generally the fit of tab **50** and ribs **52** into recess **28**. The shape and location of tab 50/ribs **51** are shown in detail in FIGS. **3–7**. The shape and location of recess **28** are shown in detail the FIGS. **1** and **2**. It is to be understood that when end cap **36** is installed on mounting portion **20**, tab **50** enters recess **28** and boss **30** on door dike **14** enters channel **52** on end cap **36** until boss **30** is seated and captured in channel **52**. Tab **50** is also seated and substantially captured in recess **28**.

The plate member **48** of the end cap **36** includes an inwardly projecting stop member **58**. The lower end of the plate member **48** also contains two circular retaining recesses **60, 62** that are visible in FIGS. **4** and **7**.

Turning now to FIGS. **8** and **9**, the end portions of two alternative wire holding baskets **34, 34'** are shown. These two baskets provide examples of the food retaining structures that may be used with the end caps **36** as part of a refrigerator shelf assembly. The two exemplary baskets **34, 34'** are constructed in essentially the same manner using metal stock that has been welded at intersections to form the basket. Each basket **34, 34'** includes a floor portion **64** and a wall portion **66**. When the basket **34** or **34'** is secured to the liner **12**, food items are placed on the floor portion **64**, and the wall portion **66** prevents the food items from falling off the floor portion **64**. The wire basket **34**, which is retained between two end caps **36** in a secured, non-movable relation, has a laterally-protruding rod portion **68** proximate the intersection of the floor portion **64** and the wall portion **66**. In addition, there is a second laterally protruding rod portion **70** located proximate the rear of the floor portion **64**. Again, it is pointed out that only one end of the wire basket **34** is shown in FIG. **8**, and the opposite end of the wire basket, which is not shown, will have the same protruding portions. The wire basket **34** is affixed to an end cap **36** in the manner illustrated in FIG. **4** wherein the rod portion **68** is seated within the circular recess **60** and the rod portion **70** is seated within the circular recess **62**.

The tiltable wire basket **34'**, as FIG. **9** shows, has a laterally protruding rod portion **68** located proximate the intersection of the floor portion **64** and the wall portion **66**. However, there is no protruding rod portion **70**. The wire basket **34'** is secured to each end cap **36** as illustrated in FIG. **7**. The rod portion **68** is seated within the circular opening **60** of each end cap **36** and the wire basket **34'** can be tilted forwardly and outwardly with respect to the end caps **36** using the rod portions **68** as a pivot point, as illustrated in FIG. **7**. As the basket **34'** is tilted outwardly, the stop member **58** of each end cap **36** will eventually engage the floor portion **64**, thereby limiting the amount by which the wire basket portion may be outwardly tilted. Use of a single end cap design that can accommodate both a fixed-relation and tiltable basket easily is advantageous.

In order to removably secure a basket assembly **32** or **32'** to the liner **12**, each end cap **36** is moved rearwardly onto the mounting portion **20** of the door dike **14**. The end cap **36** is then moved downwardly so that the tab **50** is slid into the recess **28**. In addition, the boss **30** of the mounting portion **20** enters the channel **52** of the end cap **36** in a snap-fit manner as the boss **30** is forced over or past the two bumps **56**. Thus, a secure fit is provided by both the snap-fit mechanism provided by the channel **52** and boss **30** as well as the engagement of the tab **50** within the recess **28**. Lateral movement of the basket assembly **32** or **32'** is limited by the frictional engagement and trapping of the tab **50** within the recess **28**. So is downward, frontward, and rearward movement. Upward movement is possible only if the snap-fit is overcome. Also, tabs **50** in recesses **28** deter lateral, downward, and rearward movement. The nature of restricting the gap width of entry into channel **52** with, for example, one or more bumps **56**, provides a snap-fit retention or frictional retention that essentially locks end cap to the mounting portion. The end cap can be released by overcoming frictional retention or providing enough force to back the boss out of the snap-fit retention. This provides for a relatively low profile locking but easy release and removal without complex structure or utilizing deformable or deflecting pieces, such as described with regard to the prior art, which could over time break or cease to function properly. The forward-facing surface **46** of the end caps **36** provides a flush-mount flange that provides an aesthetically pleasing appearance. The rear end of the floor portion **64** of each wire basket **34, 34'** rests on the horizontal support ledge **18** of the liner **12**.

FIG. **10** illustrates in perspective view an alternative example of reversible securement of a structure to door **10**. Here a one-piece molded plastic shelf **100** includes end caps **36** at opposite ends, but integrally formed therein, such that shelf **100** and end caps **36** comprise an integral one-piece apparatus. Vertical mounting structures, as previously described, receive corresponding mounting structure of end caps **36'** (e.g. tab **50**, U-shaped channel **52**) to support and snap-fit rear securing portions **42** on opposite ends of shelf **100** to mounting portions **20** on opposite sides of liner **12** of door **10**.

FIG. **10** therefore illustrates how a different structure can be releasably mounted with such mounting configuration. The structure can be of variety of things. Examples are baskets, shelves, or retaining members. The structure can also be support structure for any of a basket, shelf, or retaining member. As shown, the structure can be multi-pieced (e.g. the end caps separate from the basket, shelf, or retaining member), or can be integrated, including being one-piece (e.g. end cap and basket, shelf, or retaining member one-piece).

Those of skill in the art will recognize that many changes and modifications may be made to the devices and methods of the present invention without departing from the scope and spirit of the invention. Thus, the scope of the invention is limited only by the terms of the claims that follow and their equivalents.

What is claimed is:

1. A door retainer assembly for retaining food items in a refrigerator unit, comprising:

a door liner having a generally vertical dike on opposite lateral sides of the door liner;

at least one mounting portion spaced apart from each dike and having at least one connecting portion to connect the mounting portion to the dike;

a shelf assembly that is removably securable to the at least one mounting portion, the shelf assembly comprising:

a food-retaining shelf portion; and

a pair of end caps that retain the food-retaining shelf portion between them, each end cap adapted to releasably mount to one of the mounting portions.

2. The door retainer assembly of claim **1** wherein the end caps and shelf portion are one piece.

3. The door retainer assembly of claim **1** wherein:

the mounting portion further comprises a plate member disposed in a substantially parallel relation to the dike and defining a mounting portion space between the plate member and the dike; and

the end caps each comprise a tab integrally formed therewith, the tab being shaped to be retained within the mounting portion space when the end caps are secured to the mounting portions

4. The door retainer assembly of claim 3 wherein:

the liner further comprises a boss that projects away from the dike; and

the end caps each further comprise a channel that is shaped to receive a boss when the end caps are secured to the mounting portions

5. The door retainer assembly of claim 4 wherein the channel is formed of ridges that protrude outwardly from a surface of the end cap to define a substantially U-shaped channel

6. The door retainer assembly of claim 5 wherein the channel includes at least one raised bump to restrict entry and exit of the boss from the channel

7. The door retainer assembly of claim 4 wherein the boss projects from the mounting portion.

8. The door retainer assembly of claim 4 wherein the channel comprises a U-shape

9. The door retainer assembly of claim 4 wherein the channel comprises a receiver with at least three sides

10. The door retainer assembly of claim 9 wherein the channel is bounded by four sides.

11. The door retainer assembly of claim 9 wherein the receiver retains movement of the end cap when in place in substantially all but one direction.

12. The door retainer assembly of claim 3 wherein the tab comprises an elongated wall

13. The door retainer assembly of claim 1 wherein the food-retaining shelf portion comprises a wire basket.

14. The door retainer assembly of claim 13 wherein the wire basket is retained between the end caps so that the wire basket is moveable tiltably with respect to the end caps.

15. The door retainer assembly of claim 13 wherein the wire basket is retained between the end caps in a non-moveable relation

16. The door retainer assembly of claim 13 wherein each of the end caps comprise a substantially circular retaining recess and the wire basket comprises a protruding rod portion to reside within the retaining recess, the end caps being mountable to the wire basket by seating the protruding rod portions within the retaining recesses.

17. The door retainer assembly of claim 1 wherein the end caps each further comprise a plate portion having a forward-facing surface that overlies a portion of the dike when the end cap is secured to the mounting portions.

18. The door retainer assembly of claim 1 wherein the door liner further comprises a generally horizontally disposed ledge portion upon which the food-retaining shelf portion rests when the end caps are secured to the mounting portions

19. The door retainer assembly of claim 1 wherein the vertical dike is of generally uniform thickness.

20. The door retainer assembly of claim 1 wherein the vertical dike extends substantially the full height of the liner

21. The door retainer assembly of claim 1 wherein the mounting portion is integrally formed in the liner.

22. The door retainer assembly of claim 1 wherein the mounting portion comprises an elongated projection in the liner generally parallel to the dike but spaced from the dike to define the space between the dike and the mounting portion

23. The door retainer assembly of claim 1 wherein to mounting portion is partially hollow in cross section

24. The door retainer assembly of claim 1 wherein the connecting portion comprises an interface between the dike and the mounting portion.

25. The door retainer assembly of claim 1 wherein the connecting portion comprises a wall integrally formed with the dike.

26. The door retainer assembly of claim 1 wherein the connecting portion comprises a web.

27. The door retainer assembly of claim 26 wherein the web comprises connecting material between the mounting portion and the dike.

28. The door retainer assembly of claim 26 wherein the web comprises a junction between the mounting portion and the dike

29. The door retainer assembly of claim 26 wherein the web comprises a built-up section to hold the mounting portion in fixed relation to the dike

30. The door retainer assembly of claim 1 wherein the mounting portion is formed in the door liner

31. The door retainer assembly of claim 1 wherein the connecting portion comprises a web.

32. The door retainer assembly of claim 1 wherein the dike has a substantially uniform thickness or width

33. The door retainer assembly of claim 1 wherein the end cap snap fits to a mounting portion.

34. A door retaining assembly for retaining food items in a refrigerator unit comprising:

a door liner having a pair of generally vertical dikes;

at least one mounting portion located adjacent to each dike and comprising a substantially rectangular plate member that is connected to the dike by at least one connecting portion and defining a space between the plate member and the dike;

a shelf assembly that is removably securable to the mounting portions of the door liner, the shelf assembly comprising:

a food-retaining shelf portion;

a pair of end caps that retain the food-retaining shelf portion between them, the end caps being mountable to the mounting portions, the end caps each having a tab to reside within the space between the plate member and the dike when the end cap is secured to one of said mounting portions

35. The door retaining assembly of claim 34 further comprising a boss on the liner, and each end cap further comprising a channel shaped receive the boss.

36. The door retainer assembly of claim 35 wherein the boss projects from the mounting portion.

37. The door retainer assembly of claim 35 wherein the channel comprises a U-shape

38. The door retainer assembly of claim 35 wherein the channel comprises a receiver with at least three sides

39. The door retainer assembly of claim 38 wherein the channel is bounded by four sides

40. The door retainer assembly of claim 38 wherein the receiver retains movement of the end cap when in place in substantially all but one direction

41. The door retaining assembly of claim 34 wherein the food-retaining shelf portion comprises a wire basket.

42. The door retaining assembly of claim 34 wherein the pair of end caps and food-retaining shelf are one piece.

43. The door retainer assembly of claim 34 wherein the vertical dike is of generally uniform thickness.

44. The door retainer assembly of claim 34 wherein the vertical dike extends substantially the full height of the liner

45. The door retainer assembly of claim 34 wherein the mounting portion is integrally formed in the liner

46 The door retainer assembly of claim 34 wherein the mounting portion comprises an elongated projection in the liner generally parallel to the dike but spaced from the dike to define the space between the dike and the mounting portion

47 The door retainer assembly of claim 34 wherein the mounting portion is partially hollow in cross section

48 The door retainer assembly of claim 34 wherein the connecting portion comprises an interface between the dike and the mounting portion

49 The door retainer assembly of claim 34 wherein the connecting portion comprises a wall integrally formed with the dike

50 The door retainer assembly of claim 34 wherein the connecting portion comprises a web

51 The door retainer assembly of claim 50 wherein the web comprises connecting material between the mounting portion and the dike

52 The door retainer assembly of claim 50 wherein the web comprises a junction between the mounting portion and the dike

53 The door retainer assembly of claim 50 wherein the web comprises a built-up section to hold the mounting portion in fixed relation to the dike

54 The door retainer assembly of claim 34 wherein the tab comprises an elongated wall

55 The door retainer assembly of claim 34 wherein the mounting portion is formed in the door liner

56 The door retainer assembly of claim 34 wherein the connecting portion comprises a web

57 The door retainer assembly of claim 34 wherein the dike has a substantially uniform thickness or width

58 The door retainer assembly of claim 34 wherein the end cap snap fits to a mounting portion

59 An apparatus for releasably attaching a structure to a door liner of a door of a refrigerator unit, the door defining generally a plane, comprising:

(a) an end cap comprising

(a1) a male member, and

(a2) an interface for a food-retaining structure;

(b) a mounting portion formed in the door liner, the mounting portion defining

(b1) a space having an entrance facing substantially outwardly of the plane of the door and configured to receive the male member of the end cap and restrain it from movement generally in the direction of the plane of the door;

(b2) the mounting portion having a relatively low profile in relationship to the door liner;

(c) a boss extending substantially from the dike,

(d) the end cap further comprising a capture member having an interior space defined by a plurality of walls and an entrance, the capture member adapted to capture and resist exit of the boss when the end cap is mounted to the mounting portion and the boss passes through the entrance of the capture member, the capture member comprising a U-shaped member with the entrance adapted to be placed over the boss

60 The apparatus of claim 59 wherein the interface comprises a pre-formed connection in the endcap adapted to receive a food-retaining portion of the structure

61 The apparatus of claim 60 wherein the food-retaining structure is a shelf, a basket, or a retainer

62 The apparatus of claim 59 wherein the interface is an integral junction with the food-retaining structure such that the end cap and the food-retaining structure is one piece

63 The apparatus of claim 59 wherein the door liner comprises first and second vertical dikes and wherein the mounting portions are positioned at or near the vertical dikes respectively of the door liner

64 The apparatus of claim 59 wherein the door liner comprises a top, a bottom and opposite sides each having a forwardmost surface, and the relatively low profile of the mounting portion does not extend beyond the forwardmost surface of the opposite side of the door liner adjacent to it

65 The apparatus of claim 64 wherein the relatively low profile of the mounting portion does not extend substantially medially of the door liner

66 The apparatus of claim 59 further comprising at least one raised portion on the interior of the U-shaped member such that the boss is snap-fit into the U-shaped member when moved sufficiently through the entrance

67 The apparatus of claim 59 wherein the male member and the boss simultaneously can be inserted into the recess and capture member respectively when the end cap is installed on the mounting portion to support and hold the end cap against movement in any direction unless sufficient removing force in a removal direction is applied to release the capture member from the boss

68 The apparatus of claim 59 wherein the capture member has a restricted cross-section into which the boss can be manually forced and to resist removal of the boss against release absent sufficient removing force in a removal direction.

69 The apparatus of claim 59 wherein the recess comprises a space bounded by walls on four sides

70 The apparatus of claim 59 wherein the door liner has a top, bottom and opposite sides and the entrance to the recess is generally in an outward and topward direction

71 A door retainer assembly for retaining items in a refrigerator unit comprising:

a door liner having a generally vertical dike on opposite lateral sides of the door liner and at least one mounting portion spaced apart from each dike, wherein the mounting portion includes at least one connecting portion to connect the mounting portion to the dike, the mounting portion comprising an elongated projection having one generally planar surface spaced from and facing the vertical dike to define a space therebetween;

a shelf assembly adapted for removeable securement to the at least one mounting portion of the door liner, the shelf assembly comprising a shelf portion and a pair of end caps that retain the shelf portion between them, each end cap adapted to releasably mount to one of said mounting portions, each end cap having a male member adapted to fit in the space between the mounting portion and the dike and having a receiver adapted to snap fit over a boss extending from the dike

72 A door retaining assembly for retaining food items in a refrigerator unit comprising:

a door liner having a pair of generally vertical dikes and at least one mounting portion spaced apart from each dike, wherein the mounting portion includes a member having a generally flat surface facing but spaced apart from the dike and connected to the dike by at least one connecting portion wherein the mounting portion defines a space between the elongated member and the dike; and

a shelf assembly that is removeably securable to the mounting portions, the shelf assembly comprising:

a shelf portion;

a pair of end caps that retain the shelf portion between them, the end caps being selectively mountable to

the mounting portions of the door liner, the end caps each having a male member adapted to reside within the space by the mounting portion when the end cap is secured to the mounting portion; and

a receiver adapted to receive a boss extended from the dike.

73. A refrigerator unit having a door retaining assembly for retaining food items, the door retaining assembly having the advantage of secure but reversible mounting of a food-retaining assembly to the refrigerator, the refrigerator unit comprising:

a body, a door, and a refrigeration system;

the door comprising a door liner having a generally vertical dike on opposite lateral sides of the door liner and a mounting portion located adjacent to each dike having at least one connecting portion to connect the mounting portion to the dike, the mounting portion comprising art elongated projection having one generally planar surface spaced from but facing the vertical dike to define a space therebetween;

a shelf assembly adapted for removeable securement to the mounting portions, the shelf assembly comprising a shelf portion and a pair of end caps that retain the shelf portion between them, each end cap adapted to releasably mount to a said mounting portion, each end cap having a male member adapted to fit in the space between the mounting portion and the dike and having a receiver adapted to snap fit over a boss extending from the dike.

74. A refrigerator unit having a door retaining assembly for retaining food items, the door retaining assembly having the advantage of secure but reversible mounting of a food-retaining assembly to the refrigerator, the refrigerator unit comprising:

a body, a door, and a refrigeration system;

a door liner having a pair of generally vertical dikes, a mounting portion located adjacent to each dike comprising a member having a generally flat surface facing but spaced apart from the dike and connected to the dike by at least one connecting portion, wherein the mounting portion defines a space between the elongated member and the dike;

a shelf assembly that is removeably securable to the door liner, the shelf assembly comprising:

a shelf portion;

a pair of end caps that retain the shelf portion between them, the end caps being selectively mountable to the mounting portions of the door liner, the end caps each having a male member adapted to reside within the space by the mounting portion when the end cap is secured to the mounting portion;

a receiver adapted to receive a boss extending from the dike.

* * * * *