IN THE UNITED STATES DISTRICT COURT
FOR THE DISTRICT OF DELAWARE

LG ELECTRONICS U.S.A., INC., and LG ELECTRONICS, INC., & Plaintiffs, v. WHIRLPOOL CORPORATION, Defendant.	C.A. No. 08-234-GMS Jury Trial Demanded
WHIRLPOOL CORPORATION, WHIRLPOOL PATENTS COMPANY, WHIRLPOOL MANUFACTURING CORPORATION, and MAYTAG CORPORATION, Counterclaim Plaintiffs, v. LG ELECTRONICS U.S.A., INC., LG ELECTRONICS, INC., and LG ELECTRONICS MONTERREY MEXICO, S.A. DE CV, Counterclaim Defendants.	

PLAINTIFFS' MEMORANDUM IN SUPPORT OF
MOTION TO STAY CERTAIN ISSUES PURSUANT TO 28 U.S.C. § 1659

Of Counsel:

Richard L. Stroup
Patrick J. Coyne
Anand K. Sharma
Walter D. Davis, Jr.
FINNEGAN, HENDERSON, FARABOW, GARRETT & DUNNER, L.L.P.
901 New York Avenue, N.W.
Washington, D.C. 20001-4413
(202) 408-4000
richard.stroup@finnegan.com
patrick.coyne@finnegan.com
anand.sharma@finnegan.com
walter.davis@finnegan.com

ASHBY & GEDDES
Steven J. Balick (I.D. #2144)
John G. Day (I.D. #2403)
Tiffany Geyer Lydon (I.D. #3950)
500 Delaware Avenue, 8th Floor
P.O. Box 1150
Wilmington, Delaware 19899
(302) 654-1888
sbalick@ashby-geddes.com
jday@ashby-geddes.com
tlydon@ashby-geddes.com

Attorneys for Plaintiffs
LG ELECTRONICS U.S.A., INC.,
LG ELECTRONICS, INC., and
LG ELECTRONICS MONTERREY MEXICO, S.A., DE, CV

TABLE OF CONTENTS

Page

INTRODUCTION 1

FACTUAL BACKGROUND 2

ARGUMENT 3

28 U.S.C. §1659 REQUIRES THE COURT TO STAY CERTAIN ISSUES IN THE INSTANT LITIGATION UNTIL A FINAL DECISION IN THE ITC PROCEEDING 3

CONCLUSION 5

TABLE OF CITATIONS

Page

Cases Cited

In re Princo Corp., 478 F.3d 1345 (Fed. Cir. 2007) 4

Statutes Cited

28 U.S.C. § 1659 1-3

28 U.S.C. § 1659(a) 1, 3-5

Other Authority Cited

H.R. Rep. 103-826(I) 4

Plaintiffs and Counterclaim Defendants LG Electronics, USA, Inc. and LG Electronics, Inc.; and Counterclaim Defendant LG Electronics Monterrey Mexico, S.A. de C.V. (collectively "LG"), respectfully submit this memorandum in support of their motion for a mandatory, statutory stay, pursuant to 28 U.S.C. § 1659(a), of all proceedings pertaining to Whirlpool's allegations of infringement of United States Patent Nos. 6,810,680 ("the '680 patent") and 6,915,644 ("the '644 patent") in this case until the final determination of *In the Matter of Certain Refrigerators and Components Thereof*, Inv. No. 337-TA-632 (the "ITC Investigation"), now pending before the United States International Trade Commission ("ITC").

INTRODUCTION

Under 28 U.S.C. § 1659, a respondent in the ITC has the absolute right to stay proceedings before a district court on common issues; provided it moves for a stay within thirty days of the institution of the district court action. Because the very same parties, patents, and claims in the ITC Investigation are now pending before this Court, LG has the statutory right to stay proceedings on these patents in this Court.

In response to a Complaint filed by Defendant and Counterclaim Plaintiff Whirlpool Corporation, and Counterclaim Plaintiffs Whirlpool Patents Company, Whirlpool Manufacturing Corporation, and Maytag Corporation (collectively "Whirlpool"), the ITC initiated an Investigation naming LG Electronics, USA, Inc.; LG Electronics, Inc.; & LG Electronics Monterrey Mexico, S.A. de C.V., as Respondents. In the ITC Complaint, Whirlpool alleges that LG infringes United States Patent Nos. 6,082,130 ("the '130 patent"), 6,971,730 ("the '730 patent), and 7,240,980 ("the '980 patent"), as well as the '680 and '644 patents. Before this Court, Whirlpool in its Counterclaim alleges that LG infringes the '130, '680, and '644 patents, placing those patents at issue in the present action.

ITC investigations require the consideration and resolution of additional issues not before this Court, adding to the complexity of the investigation. By statute, the trial of an ITC investigation must be completed within approximately a year, and the expenses to complete an ITC investigation are usually several millions of dollars. The ITC has no right or authority to stay an investigation in favor of a pending District Court action involving the same issues.

The district courts, however, are required to stay proceedings on issues that are pending on claims before the ITC, if the respondent seeks such a stay. Pursuant to 28 U.S.C. § 1659, LG hereby requests a stay of all proceedings pertaining to the asserted '680 and '644 patents. Although LG also has the statutory right to request a stay with respect to the '130 patent, LG is not moving for a stay of the '130 patent issues. Rather, LG intends promptly to pursue resolution of the issues regarding the '130 patent.

FACTUAL BACKGROUND

On January 23, 2008, Whirlpool filed a complaint in the ITC ("the ITC Complaint") against LG, the Plaintiffs and Counterclaim Defendants herein, alleging patent infringement. Specifically, Whirlpool alleged that LG has infringed one or more claims of each of the '130, '680, '644, '730, and '980 patents. Exh. A.

The ITC instituted Investigation No. 337-TA-632 ("the ITC Investigation") to investigate alleged infringement of one or more claims of the '130, '680, '644, '730, and '980 patents by LG's alleged "importation into the United States, the sale for importation into the United States, and/or the sale or offer for sale within the United States after importation, of refrigerators and components thereof. . ." Exh. A.

LG responded to the ITC Complaint by denying the Whirlpool Defendants' allegations of infringement and raising affirmative defenses of non-infringement, unenforceability, and invalidity of the '130, '680, '644, '730, and '980 patents. Exh. B.

In response to the Complaint LG filed before this Court, Whirlpool filed counterclaims, adding parties and alleging infringement of several patents, including the '130, '680, and '644 patents. D.I. 8. Through that counterclaim, the very same parties in the ITC Investigation are now before this Court. And the '680 and the '644 patents, and issues relating to those patents, are now before both the ITC and this Court. In response to these circumstances, LG is exercising its right, under 28 U.S.C. § 1659(a), and asking this Court to stay all proceedings pertaining to the asserted '680 and '644 patents.

LG and Whirlpool are also parties to another civil action pending in the U.S. District Court for the District of New Jersey, involving three of the same Whirlpool patents now before this Court. In that action, LG sought a Declaratory Judgment that it was not infringing the patents before the ITC and that those patents were invalid. In order to conserve judicial resources and to facilitate the orderly and efficient disposition of the issues between them, LG and Whirlpool have agreed to transfer the claims in the New Jersey action to this Court so that the issues may all be resolved before the same Court. LG filed a joint stipulation on May 15, 2008, to effect a transfer of the New Jersey action to this Court. When that transfer is completed, LG expects that the parties and this Court will address how best to proceed with both this case and the related case, now in New Jersey.

ARGUMENT

28 U.S.C. § 1659 REQUIRES THIS COURT TO STAY CERTAIN ISSUES IN THE INSTANT LITIGATION UNTIL A FINAL DECISION IN THE ITC PROCEEDING

Federal statute provides that when a common issue exists between an ITC proceeding and a district court action, any claims involving such a common issue must be stayed, if requested by

a party to the civil action that is also a respondent in the ITC proceeding. Section 1659(a) of Title 28 provides, in pertinent part:

> (a) Stay.--In a civil action involving parties that are also parties to a proceeding before the United States International Trade Commission under section 337 of the Tariff Act of 1930, at the request of a party to the civil action that is also a respondent in the proceeding before the Commission, ***the district court shall stay,*** until the determination of the Commission becomes final, ***proceedings in the civil action with respect to any claim that involves the same issues involved in the proceeding before the Commission***, but only if such request is made within--
>
> (1) 30 days after the party is named as a respondent in the proceeding before the Commission, or
>
> (2) 30 days after the district court action is filed, whichever is later.

(Emphasis added). The mandatory stay lasts "until the [ITC] proceedings are no longer subject to judicial review." *In re Princo Corp*., 478 F.3d 1345, 1355 (Fed. Cir. 2007). Section 1659(a) specifically provides for stays "with respect to any claim that involves the same issues as those pending before the Commission." H.R. Rep. 103-826(I), at 141.

Here, all the requirements of Section 1659(a) have been met, obligating this Court to stay all proceedings related to the '680 and '644 patents. Specifically, and as set forth in Section 1659(a):

1. **Same Parties**. Whirlpool's allegations of infringement regarding the '680 and the '644 patent in its Counterclaims before this Court "involv[e] parties that are also parties to a proceeding before the United States International Trade Commission under Section 337 of the Tariff Act of 1930 . . . ."

2. **Same Issues**. Whirlpool's allegations of infringement regarding the '680 and the '644 patent in its Counterclaims before this Court "involve[ ] the same issues involved in the proceeding before the Commission . . . ."

3. **Requested Stay by Respondent in ITC Investigation**. LG's election under section 1659(a) is the "request of a party to the civil action that is also a respondent in the proceeding before the Commission . . . ."

4. **LG's Section 1659(a) Election is Timely**. LG's election under section 1659(a) is made within "30 days after the district court action is filed."

Accordingly, because each of the requirements of Section 1659(a) is met, this Court "shall stay" all proceedings pertaining to the asserted claims of the '680 and '644 patents "until the determination of the Commission becomes final . . . ." 28 U.S.C. § 1659(a).

CONCLUSION

For the reasons set forth above, LG respectfully requests that this Court stay all proceedings pertaining to the '680 and '644 patents in this case until the ITC's determination in *In the Matter of Certain Refrigerators and Components Thereof*, Inv. No. 337-TA-632, becomes final and is no longer subject to judicial review.

Of Counsel:

Richard L. Stroup
Patrick J. Coyne
Anand K. Sharma
Walter D. Davis, Jr.
FINNEGAN, HENDERSON, FARABOW, GARRETT & DUNNER, L.L.P.
901 New York Avenue, N.W.
Washington, D.C. 20001-4413
(202) 408-4000
richard.stroup@finnegan.com
patrick.coyne@finnegan.com
anand.sharma@finnegan.com
walter.davis@finnegan.com

ASHBY & GEDDES

/s/ Tiffany Geyer Lydon

Steven J. Balick (I.D. #2114)
John G. Day (I.D. #2403)
Tiffany Geyer Lydon (I.D. #3950)
500 Delaware Avenue, 8th Floor
P.O. Box 1150
Wilmington, Delaware 19899
(302) 654-1888
sbalick@ashby-geddes.com
jday@ashby-geddes.com
tlydon@ashby-geddes.com

Attorneys for Plaintiffs
LG ELECTRONICS U.S.A., INC.,
LG ELECTRONICS, INC., and
LG ELECTRONICS MONTERREY MEXICO, S.A., DE, CV

Dated: May 16, 2008

EXHIBIT A

Internet at *http://parkplanning.nps.gov/sagu.*

FOR FURTHER INFORMATION CONTACT: Contact Superintendent Sarah Craighead of Saguaro National Park at the address, telephone number, or electronic mail address shown above.

Dated: November 2, 2007.

Michael D. Snyder,

Regional Director, Intermountain Region, National Park Service.

[FR Doc. E8–3570 Filed 2–25–08; 8:45 am]

BILLING CODE 4312–52–P

DEPARTMENT OF THE INTERIOR

National Park Service

Cape Cod National Seashore; South Wellfleet, MA; Cape Cod National Seashore Advisory Commission; Two Hundredth Sixty Fourth Notice of Meeting

Notice is hereby given in accordance with the Federal Advisory Committee Act (Pub. L. 92–463, 86 Stat. 770, 5 U.S.C. App 1, Section 10), that a meeting of the Cape Cod National Seashore Advisory Commission will be held on February 25, 2008.

The Commission was reestablished pursuant to Public Law 87–126 as amended by Public Law 105–280. The purpose of the Commission is to consult with the Secretary of the Interior, or her designee, with respect to matters relating to the development of Cape Cod National Seashore, and with respect to carrying out the provisions of sections 4 and 5 of the Act establishing the Seashore.

The Commission members will meet at 1 p.m. in the meeting room at Headquarters, Marconi Station, Wellfleet, Massachusetts for the regular business meeting to discuss the following:

1. Adoption of Agenda.
2. Approval of Minutes of Previous Meeting (December 11, 2007).
3. Reports of Officers.
4. Reports of Subcommittees. Improved Properties/Town Bylaws. Wind Turbines/Cell Towers.
5. Superintendent's Report. Herring River Restoration update. Update on Dune Shacks and Report. Highlands Center Update. Alternate Transportation Funding. Centennial Challenge.
6. Old Business.
7. New Business.
8. Date and agenda for next meeting.
9. Public comment and
10. Adjournment.

The meeting is open to the public. It is expected that 15 persons will be able to attend the meeting in addition to Commission members.

Interested persons may make oral/written presentations to the Commission during the business meeting or file written statements. Such requests should be made to the park superintendent at least seven days prior to the meeting. Further information concerning the meeting may be obtained from the Superintendent, Cape Cod National Seashore, 99 Marconi Site Road, Wellfleet, MA 02667.

Dated: January 10, 2008.

George E. Price, Jr.,

Superintendent.

[FR Doc. E8–3599 Filed 2–25–08; 8:45 am]

BILLING CODE 4310–WV–P

DEPARTMENT OF THE INTERIOR

National Park Service

National Preservation Technology and Training Board—National Center for Preservation Technology and Training: Meeting

AGENCY: National Park Service, U.S. Department of the Interior.

ACTION: Notice.

SUMMARY: Notice is hereby given in accordance with the Federal Advisory Committee Act (FACA) (5 U.S.C. Appendix (1988)), that the Preservation Technology and Training Board (Board) of the National Center for Preservation Technology and Training (NCPTT), National Park Service will meet on Tuesday and Wednesday, April 15–16, 2008, in Natchitoches, Louisiana.

The Board was established by Congress to provide leadership, policy advice, and professional oversight to the National Park Service's National Center for Preservation Technology and Training (National Center) in compliance with section 404 of the National Historic Preservation Act of 1966, as amended, (16 U.S.C. 470x–2(e)).

The Board will meet at Lee H. Nelson Hall, the headquarters of NCPTT, at 645 University Parkway, Natchitoches, LA 71457—telephone (318) 356–7444. The meeting will run from 9 a.m. to 5 p.m. on April 15 and from 9 a.m. to 12 p.m. on April 16.

The Board's meeting agenda will include: review and comment on National Center FY2007 accomplishments and operational priorities for FY2008; FY2008 and FY2009 National Center budget and initiatives; proposed Conference on Sustainability in Preservation; revitalization of the Center's Friends group, and Board workgroup reports.

The Board meeting is open to the public. Facilities and space for accommodating members of the public are limited, however, and persons will be accommodated on a first come, first served basis. Any member of the public may file a written statement concerning any of the matters to be discussed by the Board.

Persons wishing more information concerning this meeting, or who wish to submit written statements, may contact: Mr. Kirk A. Cordell, Executive Director, National Center for Preservation Technology and Training, National Park Service, U.S. Department of the Interior, 645 University Parkway, Natchitoches, LA 71457—telephone (318) 356–7444. In addition to U.S. Mail or commercial delivery, written comments may be sent by fax to Mr. Cordell at (318) 356–9119.

Minutes of the meeting will be available for public inspection no later than 90 days after the meeting at the office of the Executive Director, National Center for Preservation Technology and Training, National Park Service, U.S. Department of the Interior, 645 University Parkway, Natchitoches, LA 71457—telephone (318) 356–7444.

Dated: January 23, 2008.

Kirk A. Cordell,

Executive Director, National Center for Preservation Technology and Training, National Park Service.

[FR Doc. E8–3609 Filed 2–25–08; 8:45 am]

BILLING CODE 4312–53–P

INTERNATIONAL TRADE COMMISSION

[Inv. No. 337–TA–632]

In the Matter of Certain Refrigerators and Components Thereof; Notice of Investigation

AGENCY: U.S. International Trade Commission.

ACTION: Institution of investigation pursuant to 19 U.S.C. 1337.

SUMMARY: Notice is hereby given that a complaint was filed with the U.S. International Trade Commission on January 23, 2008, under section 337 of the Tariff Act of 1930, as amended, 19 U.S.C. 1337, on behalf of Whirlpool Patents Company of St. Joseph, Michigan; Whirlpool Manufacturing Corporation of St. Joseph, Michigan; Whirlpool Corporation of Benton Harbor, Michigan; and Maytag Corporation of Benton Harbor, Michigan. A supplement to the complaint was filed on February 11, 2008. The complaint, as supplemented, alleges violations of section 337 based

upon the importation into the United States, the sale for importation, and the sale within the United States after importation of certain refrigerators and components thereof that infringe certain claims of U.S. Patent Nos. 6,082,130; 6,810,680; 6,915,644; 6,971,730; and 7,240,980. The complaint, as supplemented, further alleges that an industry in the United States exists as required by subsection (a)(2) of section 337.

The complainants request that the Commission institute an investigation and, after the investigation, issue an exclusion order and cease and desist orders.

ADDRESSES: The complaint, as supplemented, except for any confidential information contained therein, is available for inspection during official business hours (8:45 a.m. to 5:15 p.m.) in the Office of the Secretary, U.S. International Trade Commission, 500 E Street, SW., Room 112, Washington, DC 20436, telephone 202–205–2000. Hearing impaired individuals are advised that information on this matter can be obtained by contacting the Commission's TDD terminal on 202–205–1810. Persons with mobility impairments who will need special assistance in gaining access to the Commission should contact the Office of the Secretary at 202–205–2000. General information concerning the Commission may also be obtained by accessing its Internet server at *http://www.usitc.gov*. The public record for this investigation may be viewed on the Commission's electronic docket (EDIS) at *http://edis.usitc.gov*.

FOR FURTHER INFORMATION CONTACT: Rett Snotherly, Esq., Office of Unfair Import Investigations, U.S. International Trade Commission, telephone (202) 205–2599.

Authority: The authority for institution of this investigation is contained in section 337 of the Tariff Act of 1930, as amended, and in section 210.10 of the Commission's Rules of Practice and Procedure, 19 CFR 210.10 (2007).

Scope of Investigation: Having considered the complaint, as supplemented, the U.S. International Trade Commission, on February 20, 2008, *ordered that*—

(1) Pursuant to subsection (b) of section 337 of the Tariff Act of 1930, as amended, an investigation be instituted to determine whether there is a violation of subsection (a)(1)(B) of section 337 in the importation into the United States, the sale for importation, or the sale within the United States after importation of certain refrigerators and components thereof that infringe on one or more of claims 1, 2, 4, 6, 8, and 9 of U.S. Patent No. 6,082,130; claims 1–14 of U.S. Patent No. 6,810,680; claims 1–13 of U.S. Patent No. 6,915,644; claims 2, 3, 7–12, 22–24, and 29 of U.S. Patent No. 6,971,730; and claims 1 and 3–20 of U.S. Patent 7,240,980, and whether an industry in the United States exists as required by subsection (a)(2) of section 337;

(2) For the purpose of the investigation so instituted, the following are hereby named as parties upon which this notice of investigation shall be served:

(a) The complainants are—

Whirlpool Patents Company, 500 Renaissance Drive, Suite 102, St. Joseph, Michigan 49085.

Whirlpool Manufacturing Corporation, 500 Renaissance Drive, Suite 102, St. Joseph, Michigan 49085.

Whirlpool Corporation, 2000 North M–63, Benton Harbor, Michigan 49022.

Maytag Corporation, 2000 North M–63, Benton Harbor, Michigan 49022.

(b) The respondents are the following entities alleged to be in violation of section 337, and are the parties upon which the complaint is to be served:

LG Electronics, Inc., LG Twin Towers, 20 Yeouido-dong, Yeongdeungpo-gu, Seoul, 150–721, South Korea.

LG Electronics, USA, Inc., 1000 Sylvan Ave., Englewood Cliffs, New Jersey 07632.

LG Electronics Monterrey, Mexico, S.A., DE, CV, Av. Industrias 180, Fracc Industrial Pimsa Ote., 66603 Apodaca, Nuevo Leon, Mexico.

(c) The Commission investigative attorney, party to this investigation, is Rett Snotherly, Esq., Office of Unfair Import Investigations, U.S. International Trade Commission, 500 E Street, SW., Room 401Q, Washington, DC 20436; and

(3) For the investigation so instituted, the Honorable Theodore R. Essex is designated as the presiding administrative law judge.

Responses to the complaint and the notice of investigation must be submitted by the named respondents in accordance with section 210.13 of the Commission's Rules of Practice and Procedure, 19 CFR 210.13. Pursuant to 19 CFR 201.16(d) and 210.13(a), such responses will be considered by the Commission if received not later than 20 days after the date of service by the Commission of the complaint and the notice of investigation. Extensions of time for submitting responses to the complaint and the notice of investigation will not be granted unless good cause therefor is shown.

Failure of a respondent to file a timely response to each allegation in the complaint and in this notice may be deemed to constitute a waiver of the right to appear and contest the allegations of the complaint and this notice, and to authorize the administrative law judge and the Commission, without further notice to the respondent, to find the facts to be as alleged in the complaint and this notice and to enter an initial determination and a final determination containing such findings, and may result in the issuance of an exclusion order or cease and desist orders or both directed against the respondent.

By order of the Commission.

Issued: February 21, 2008.

Marilyn R. Abbott,

Secretary to the Commission.

[FR Doc. E8–3575 Filed 2–25–08; 8:45 am]

BILLING CODE 7020–02–P

DEPARTMENT OF JUSTICE

Notice of Lodging of Agreed Amendment to the Consent Decree Providing for Remedial Actions at Neal's Landfill, Lemon Lane Landfill and Bennett's Dump and Addressing General Matters Under the Comprehensive Environmental Response, Compensation and Liability Act

Notice is hereby given that on February 19, 2008, a proposed Amendment to the Consent Decree Providing for Remedial Actions at Neal's Landfill, Lemon Lane Landfill and Bennett's Dump and Addressing General Matters (''Amendment'') in *United States of America, et al.*, v. *CBS Corporation*, Civil Action No. 1:81–cv–0448–RLY–KPF was lodged with the United States District Court for the Southern District of Indiana.

In 1985, CBS entered into a Consent Decree with the United States, the State of Indiana, the City of Bloomington and Monroe County to remove and incinerate PCB contamination from six sites in and near Bloomington, Indiana. The proposed Amendment is the last in a series of partial settlements that the parties have negotiated over the past 10 years to replace the remedial measures in the original 1985 settlement. The proposed Amendment requires CBS to perform additional cleanup actions selected by the U.S. Environmental Protection Agency to address PCB contamination in groundwater, surface water, soils and sediment at the last three sites. CBS shall, among other things, expand and operate the existing water treatment plant at Illinois Central Spring, expand the collection system and operate the existing treatment plant at Neal's Landfill, and build and operate

EXHIBIT B

Part 1

PUBLIC VERSION

UNITED STATES INTERNATIONAL TRADE COMMISSION
WASHINGTON, D.C.

Administrative Law Judge
Honorable Theodore R. Essex

In the Matter of	
CERTAIN REFRIGERATORS AND COMPONENTS THEREOF	**Investigation No. 337-TA-632**

RESPONSE OF LG ELECTRONICS, INC., LG ELECTRONICS, USA, INC., AND LG ELECTRONICS MONTERREY MEXICO S.A., DE, CV TO THE COMPLAINT AND NOTICE OF INVESTIGATION

RECEIVED
OFC OF THE SECRETARY
US INT'L TRADE COMM
2008 MAY 15 PM 5:08

Thomas L. Jarvis
Richard L. Stroup
Andrew C. Sonu
Parmanand K. Sharma
Paul C. Goulet
Walter D. Davis, Jr.
Finnegan, Henderson, Farabow,
Garrett, & Dunner L.L.P.
901 New York Avenue, NW
Washington, DC 20001-4413
(202) 408-4000
(202) 408-4400 fax

COUNSEL FOR LG ELECTRONICS, INC.,
LG ELECTRONICS, USA, INC., AND
LG ELECTRONICS MONTERREY MEXICO S.A. DE
C.V.

Respondents LG Electronics, Inc., LG Electronics, USA, Inc., and LG Electronics Monterrey Mexico S.A. de C.V. (collectively "Respondents") respectfully submit the following Response to Complainants Whirlpool Corporation, Whirlpool Patents Company, Whirlpool Manufacturing Corporation, and Maytag Corporation (collectively "Complainants") Complaint Under Section 337 of the Tariff Act of 1930.

RESPONSE TO THE NOTICE OF INVESTIGATION

Responding to the Notice of Investigation filed in the above-entitled investigation, Respondents admit such an investigation exists, and that LG Electronics, Inc., LG Electronics, USA, Inc., and LG Electronics Monterrey Mexico S.A. de C.V. are named respondents therein. However, Respondents otherwise deny the existence of the predicates and requirements for liability under such investigation, and therefore deny the allegations in the Notice of Investigation, to the extent such allegations exist.

All allegations in the Complaint that are not specifically admitted as set forth below are hereby denied.

RESPONSE TO THE COMPLAINT

I. INTRODUCTION

1.1 Complainants Whirlpool Patents Company ("Whirlpool Patents"), Whirlpool Manufacturing Corporation ("Whirlpool Manufacturing"), Whirlpool Corporation ("Whirlpool"), and Maytag Corporation ("Maytag") (collectively, "Complainants") request the International Trade Commission ("the Commission") to commence an investigation into the importation, sale

for importation, and sale after importation, of certain refrigerators and components thereof in violation of Section 337 of the Tariff Act of 1930, as amended, 19 U.S.C. §1337.

Answer: Responding to paragraph 1.1, Respondents admit that Complainants purport to bring an action based upon the importation, sale for importation, and sale after importation of certain refrigerators and components thereof allegedly in violation of Section 337 of the Tariff Act of 1930, as amended, 19 U.S.C. §1337. Respondents deny that the accused products of Respondents violate Section 337 of the Tariff Act of 1930, as amended, 19 U.S.C. §1337. Respondents deny the existence of the predicates and requirements of the aforementioned action and deny the remaining allegations.

1.2 The proposed respondents LG Electronics, Inc. ("LG"), LG Electronics, USA, Inc. ("LG USA"), and LG Electronics Monterrey Mexico, S.A., De, CV ("LG Mexico") (collectively, "the LG Entities") have engaged in unfair acts in violation of Section 337(a)(I)(B)(i) through the importation into the United States, the sale for importation into the United States, and/or the sale or offer for sale within the United States after importation, of refrigerators and components thereof that infringe at least claims 1, 2, 4, 6, 8, and 9 of U.S. Patent No. 6,082,130 ("the '130 Patent"), claims 1-14 of U.S. Patent No. 6,810,680 ("the '680 Patent"), claims 1-13 of U.S. Patent No. 6,915,644 ("the '644 Patent"), claims 2,3, 7-12, 22-24, and 29 of U.S. Patent No. 6,971,730 ("the '730 Patent"), and claims 1 and 3-20 of U.S. Patent No. 7,240,980 ("the '980 Patent"). The '130 Patent is owned by Complainant Whirlpool Patents Company, and a copy of that patent is attached hereto as Exhibit 1. The '680, '644, '730, and '980 Patents are owned by Complainant Maytag Corporation, and copies of those patents are attached hereto as Exhibits 2, 3, 4, and 5, respectively.

Answer: Responding to paragraph 1.2, Respondents admit that they are the named Respondents in this investigation. Respondents deny that they have engaged in unfair acts in violation of Section 337(a)(I)(B)(i) through the importation into the United States, the sale for importation into the United States, and/or the sale or offer for sale within the

United States after importation of refrigerators and components that allegedly infringe claims 1, 2, 4, 6, 8, and 9 of U.S. Patent No. 6,082,130 ("the '130 Patent"); claims 1-14 of U.S. Patent No. 6,810,680 ("the '680 Patent"); claims 1-13 of U.S. Patent No. 6,915,644 ("the '644 Patent"); claims 2, 3, 7-12, 22-24, and 29 of U.S. Patent No. 6,971,730 ("the '730 Patent"); and claims 1 and 3-20 of U.S. Patent No. 7,240,980 ("the '980 Patent") (collectively, "the Asserted Patents"). Respondents deny that Respondents' refrigerators or any components thereof directly or indirectly infringe any valid and enforceable claim of the Asserted Patents. Respondents admit that the '680, '644, and '730 Patents list on their faces Maytag Corporation as the assignee for those patents. Respondents admit that Exhibits 1-5 include what are purported to be copies of the Asserted Patents. Respondents are otherwise without sufficient knowledge or information to form a belief as to the truth of the remaining allegations in paragraph 1.2 and therefore deny them.

1.3 Complainants seek a permanent exclusion order under Section 337(d) excluding from entry into the United States refrigerators and components thereof manufactured, sold, assembled, sold for importation, sold after importation, or imported by or on behalf of any of the LG Entities that infringe any of at least claims 1, 2, 4, 6, 8, and 9 of the' 130 Patent, claims 1-14 of the '680 Patent, claims 1-13 of the '644 Patent, claims 2, 3, 7-12, 22-24, and 29 of the '730 Patent, and claims 1 and 3-20 of the '980 Patent.

Answer: Responding to paragraph 1.3, Respondents admit that Complainants seek the stated relief. However, Respondents deny the existence of the predicates and requirements of such relief and deny that Complainants are entitled to such relief. Respondents deny that Respondents' refrigerators or any components thereof directly or indirectly infringe any valid and enforceable claim of the Asserted patents.

1.4 Complainants also seek an order under Section 337(f)(l) directing the LG Entities to cease and desist from unfair methods of competition and unfair acts, including importing, assembling, testing, marketing, distributing, offering for sale, selling, or otherwise transferring in the United States imported refrigerators and/or components thereof that infringe any of at least claims 1, 2, 4, 6, 8, and 9 of the' 130 Patent, claims 1-14 of the '680 Patent, claims 1-13 of the

'644 Patent, claims 2, 3, 7-12, 22-24, and 29 of the '730 Patent, and claims 1 and 3-20 of the '980 Patent.

Answer: Responding to paragraph 1.4, Respondents admit that Complainants seek the stated relief. However, Respondents deny the existence of the predicates and requirements of such relief and deny that Complainants are entitled to such relief. Respondents deny that Respondents' refrigerators or any components thereof directly or indirectly infringe any valid and enforceable claim of the Asserted patents.

II. COMPLAINANTS

2.1 Complainant Whirlpool Patents Company is a Michigan corporation having its principal place of business at 500 Renaissance Drive, Suite 102, St. Joseph, Michigan 49085. This complaint is made under oath by an authorized agent of Whirlpool Patents Company. Whirlpool Patents Company is a wholly owned subsidiary of Whirlpool Corporation.

Answer: Responding to paragraph 2.1, Respondents lack sufficient knowledge or information to form a belief as to the truth of the allegations in this paragraph and therefore deny them.

2.2 Complainant Whirlpool Manufacturing Corporation is a Michigan corporation having its principal place of business at 500 Renaissance Drive, Suite 102, St. Joseph, Michigan 49085. This complaint is made under oath by an authorized agent of Whirlpool Manufacturing Corporation. Whirlpool Manufacturing Corporation is a wholly owned subsidiary of Whirlpool Corporation.

Answer: Responding to paragraph 2.2, Respondents lack sufficient knowledge or information to form a belief as to the truth of the allegations in this paragraph and therefore deny them.

2.3 Complainant Whirlpool Corporation is a Delaware corporation having its principal place of business at 2000 North M-63, Benton Harbor, Michigan 49022. This complaint is made under oath by an authorized agent of Whirlpool Corporation.

Answer: Responding to paragraph 2.3, Respondents lack sufficient knowledge or information to form a belief as to the truth of the allegations in this paragraph and therefore deny them.

2.4 Whirlpool Patents Company is the owner by assignment of the '130 Patent. Whirlpool Patents has licensed rights under the '130 Patent to Whirlpool Manufacturing, which has in turn licensed rights under the '130 Patent to Whirlpool Corporation.

Answer: Responding to paragraph 2.4, Respondents lack sufficient knowledge or information to form a belief as to the truth of the allegations in this paragraph and therefore deny them.

2.5 Whirlpool is the world's leading manufacturer and seller of major home appliances. When Whirlpool began in St. Joseph, Michigan in 1911, its business operations were dedicated to the field of washing machines. In that field, Whirlpool pioneered numerous innovations, including the top-loading automatic washer, which has become a standard product in most households today. In the 1950s, Whirlpool's success and reputation for quality allowed it to diversify its product line to include refrigerators, dryers, ranges, and dishwashers, and to expand geographically to open manufacturing facilities in Indiana and Ohio. Today, Whirlpool maintains manufacturing and development facilities in 14 different locations in the United States, and employs over 80,000 people worldwide (approximately 28,000 in North America). Products bearing Whirlpool-owned brands - including KitchenAid®, Roper®, and the more recently acquired Maytag®, Amana®, and Jenn-Air® brands - are at the top of nearly every market in the home appliance industry. Whirlpool also manufactures Kenmore®-branded appliances

(marketed by Sears Holding Corporation and its affiliates ("Sears")). Whirlpool's line of refrigerator products constitutes a major part of Whirlpool's worldwide investments, notoriety, and success in the marketplace.

Answer: Responding to paragraph 2.5, Respondents lack sufficient knowledge or information to form a belief as to the truth of the allegations in this paragraph and therefore deny them.

2.6 Complainant Maytag Corporation is a Delaware corporation having its principal place of business at 2000 North M-63, Benton Harbor, Michigan 49022. This complaint is made under oath by an authorized agent of Maytag. Maytag Corporation is a wholly owned subsidiary of Whirlpool Corporation.

Answer: Responding to paragraph 2.6, Respondents lack sufficient knowledge or information to form a belief as to the truth of the allegations in this paragraph and therefore deny them.

2.7 Much like Whirlpool, Maytag started manufacturing consumer washing machines in the early 1900s, and soon expanded its business into the remainder of the home and commercial appliance industry. In March of 2006, Maytag was acquired by Whirlpool, merging together the almost two centuries of collective innovation that have enabled these companies to deliver the highest-quality products to the home appliance industry.

Answer: Responding to paragraph 2.7, Respondents lack sufficient knowledge or information to form a belief as to the truth of the allegations in this paragraph and therefore deny them.

2.8 To remain at the top of this highly competitive industry, Whirlpool and Maytag have invested vast amounts of resources in research, development, and quality management of their product design, including more than 5,000 Whirlpool employees today that are trained and actively involved in innovation initiatives.

Answer: Responding to paragraph 2.8, Respondents lack sufficient knowledge or information to form a belief as to the truth of the allegations in this paragraph and therefore deny them.

2.9 In the field of household refrigerators, Whirlpool and Maytag have adapted their products continuously to meet the demands of U.S. consumers, including a focus on "side-by-side" designs that became popular in the late 1990s, and a more recent shift to the now popularized bottom-mount pull out drawer freezer and French door refrigerator models. With each of these shifts in design focus came the need for new innovations to implement consumer-driven design changes and features, while maintaining the high level of quality that has been the hallmark of Whirlpool and Maytag products. These innovations have reached nearly every aspect of Whirlpool's products, including aesthetic design, maintenance, energy efficiency, flexibility, and performance features. The claimed inventions of the '130, '680, '644, '730, and '980 Patents are key examples of these types of innovations.

Answer: Responding to paragraph 2.9, Respondents lack sufficient knowledge or information to form a belief as to the truth of the allegations in this paragraph and therefore deny them.

III. PROPOSED RESPONDENTS

3.1 Respondent, LG Electronics, Inc. is a Korean corporation having its principal place of business at LG Twin Towers, 20 Yeouido-dong, Yeoungdeungpo-gu, Seoul, 150-721, South Korea. Upon information and belief, LG's business includes the manufacture, importation, and/or sale of refrigerators and components thereof in facilities in various foreign jurisdictions, including Korea, for importation into and sale in the United States. Upon information and belief, certain third parties (*e.g.*, affiliates of Sears and General Electric Company ("General Electric"))

also may import refrigerators and components thereof assembled, manufactured, and sold for importation by LG.

Answer: Responding to paragraph 3.1, Respondents admit that LG Electronics, Inc is a Korean corporation having its principal place of business at LG Twin Towers, 20 Yeouido-dong, Yeoungdeungpo-gu, Seoul, 150-721, South Korea. Respondents admit that LG Electronics, Inc.'s business includes the assembly and/or sale of refrigerators and components thereof in facilities in foreign jurisdictions, including Korea, for importation into and distribution in the United States. Respondents lack sufficient knowledge or information to form a belief as to the truth of the remaining allegations in this paragraph and therefore deny them.

3.2 Respondent, LG Electronics, USA, Inc. is a New Jersey corporation having its principal place of business at 1000 Sylvan Ave., Englewood Cliffs, New Jersey 07632. Upon information and belief, LG USA's business includes the sale and/or importation of refrigerators and components thereof for sale in the United States.

Answer: Responding to paragraph 3.2, Respondents admit that LG Electronics U.S.A., Inc.'s principal place of business is 1000 Sylvan Avenue, Englewood Cliffs, New Jersey 07632. Respondents admit that LG Electronics U.S.A., Inc.'s business includes the distribution and/or importation of refrigerators and components thereof into the United States. Respondents lack sufficient knowledge or information to form a belief as to the truth of the remaining allegations in this paragraph and therefore deny them

3.3 Respondent, LG Electronics Monterrey Mexico, S.A., De, CV is a Mexican corporation having its principal place of business at Av. Industrias 180, Fracc Industrial Pimsa Ote., 66603 Apodaca, Nuevo Leon, Mexico. Upon information and belief, LG Mexico's business includes the manufacture, importation, and/or sale of refrigerators and components thereof for importation into and sale in the United States. Upon information and belief, certain third parties also may import refrigerators and components thereof assembled, manufactured, and sold for importation by LG Mexico.

Answer: Responding to paragraph 3.3, Respondents admit that LG Electronics Monterrey Mexico, S.A. de C.V. ("LG Mexico") is a Mexican corporation having its principal place of business at Av. Industrias 180, Fracc Industrial Pimsa Ote., 66603 Apodaca, Nuevo Leon, Mexico. Respondents admit that LG Mexico's business includes the assembly and/or delivery of refrigerators and components thereof for importation and distribution in the United States. Respondents lack sufficient knowledge or information to form a belief as to the truth of the remaining allegations in this paragraph and therefore deny them.

IV. THE PATENTS AT ISSUE

A. Identification of Patents and Ownership by Whirlpool Patents and Maytag.

4.1 Whirlpool Patents is the owner by assignment of United States Patent No. 6,082,130, which was duly, properly, and legally issued to Whirlpool Corporation by virtue of an assignment from the inventors on July 4, 2000, for an invention entitled "Ice Delivery System for a Refrigerator." A certified copy of the '130 Patent accompanies this Complaint as Exhibit 1. A certified copy of the assignment to Whirlpool Corporation and a copy of the assignment from Whirlpool Corporation to Whirlpool Patents are provided in Exhibit 6 to this Complaint. Under Commission Rule 210.12(c)(2) and (3), also provided with this Complaint in Appendix 1 are: (a) a certified copy and three additional copies of the prosecution history of the '130 Patent; and (b) four copies of each patent and applicable pages of each technical reference mentioned in the prosecution of the '130 Patent.

Answer: Responding to paragraph 4.1, Respondents admit that the '130 Patent on its face indicates that it issued on July 4, 2000 to Whirlpool Corporation and is entitled "Ice Delivery System for a Refrigerator." Respondents admit that Exhibit 1 includes what is purported to be a copy of the '130 Patent. Respondents admit that Exhibit 6 includes what is purported to be a copy of an assignment to Whirlpool Corporation and a copy of an assignment from Whirlpool Corporation to Whirlpool Patents. Respondents admit that Appendix 1 includes what is purported to be (a) a certified copy and three additional copies of the prosecution history of the '130 Patent, and (b) four copies of each patent and applicable pages of each technical reference mentioned in the prosecution of the '130 Patent. Respondents are otherwise without sufficient knowledge or information to form a

belief as to the truth of the remaining allegations in paragraph 4.1 and therefore deny them.

4.2 Maytag is the owner by assignment of United States Patent No. 6,810,680, which was duly, properly, and legally issued to Maytag by virtue of an assignment from the inventors on November 2, 2004, for an invention entitled "Ice Maker Fill Tube Assembly." A certified copy of the '680 Patent accompanies this Complaint as Exhibit 2. A certified copy of the assignment to Maytag accompanies this Complaint as Exhibit 7. Under Commission Rule 210.12(c)(2) and (3), also provided with this Complaint in Appendix 2 are: (a) a certified copy and three additional copies of the prosecution history of the '680 Patent; and (b) four copies of each patent and applicable pages of each technical reference mentioned in the prosecution of the '680 Patent.

Answer: Responding to paragraph 4.2, Respondents admit that the '680 Patent on its face indicates that it issued on November 2, 2004 to Maytag Corporation and is entitled "Ice Maker Fill Tube Assembly." Respondents admit that Exhibit 2 includes what is purported to be a copy of the '680 Patent. Respondents admit that Exhibit 7 includes what is purported to be a copy of an assignment to Maytag Corporation. Respondents admit that Appendix 2 includes what is purported to be (a) a certified copy and three additional copies of the prosecution history of the '680 Patent, and (b) four copies of each patent and applicable pages of each technical reference mentioned in the prosecution of the '680 Patent. Respondents are otherwise without sufficient knowledge or information to form a belief as to the truth of the remaining allegations in paragraph 4.2 and therefore deny them.

4.3 Maytag is the owner by assignment of United States Patent No. 6,915,644, which was duly, properly, and legally issued to Maytag by virtue of an assignment from the inventors on November 2, 2004, for an invention entitled "Ice Maker Fill Tube Assembly." A certified copy of the '644 Patent accompanies this Complaint as Exhibit 3. A copy of the assignment to Maytag accompanies this Complaint as Exhibit 8. Under Commission Rule 210.12(c)(2) and (3),

also provided with this Complaint in Appendix 3 are: (a) four copies of the prosecution history of the '644 Patent; and (b) four copies of each patent and applicable pages of each technical reference mentioned in the prosecution of the '644 Patent. Complainants have requested a certified copy of the prosecution history of the '644 Patent from the U.S. Patent and Trademark Office, and will supplement with that certified copy as soon as possible.

Answer: Responding to paragraph 4.3, Respondents admit that the '644 Patent on its face indicates that it issued to Maytag Corporation and is entitled "Ice Maker Fill Tube Assembly." Respondents deny that the '644 Patent issued on November 2, 2004. Respondents admit that Exhibit 3 includes what is purported to be a copy of the '644 Patent, however, Respondents deny that that copy is certified. Respondents admit that Exhibit 8 includes what is purported to be a copy of an assignment to Maytag Corporation. Respondents admit that Appendix 3 includes what is purported to be (a) four copies of the prosecution history of the '644 Patent, and (b) four copies of each patent and applicable pages of each technical reference mentioned in the prosecution of the '644 Patent. Respondents are otherwise without sufficient knowledge or information to form a belief as to the truth of the remaining allegations in paragraph 4.3 and therefore deny them.

4.4 Maytag is the owner by assignment of United States Patent No. 6,971,730, which was duly, properly, and legally issued to Maytag by virtue of an assignment from the inventor on December 6, 2005, for an invention entitled "Freezer Drawer Support Assembly." A certified copy of the '730 Patent accompanies this Complaint as Exhibit 4. A certified copy of the assignment to Maytag accompanies this Complaint as Exhibit 9. Under Commission Rule 210.12(c)(2) and (3), also provided with this Complaint in Appendix 4 are: (a) a certified copy and three additional copies of the prosecution history of the '730 Patent; and (b) four copies of each patent and applicable pages of each technical reference mentioned in the prosecution of the '730 Patent.

Answer: Responding to paragraph 4.4, Respondents admit that the '730 Patent on its face indicates that it issued on December 6, 2005 to Maytag Corporation and is entitled

"Freezer Drawer Support Assembly." Respondents admit that Exhibit 4 includes what is purported to be a copy of the '730 Patent. Respondents admit that Exhibit 9 includes what is purported to be a copy of an assignment to Maytag Corporation. Respondents admit that Appendix 4 includes what is purported to be (a) a certified copy and three additional copies of the prosecution history of the '730 Patent, and (b) four copies of each patent and applicable pages of each technical reference mentioned in the prosecution of the '730 Patent. Respondents are otherwise without sufficient knowledge or information to form a belief as to the truth of the remaining allegations in paragraph 4.4 and therefore deny them.

4.5 Maytag is the owner by assignment of United States Patent No. 7,240,980, which was duly, properly, and legally issued to Maytag by virtue of an assignment from the inventors on December 6, 2005, for an invention entitled "Freezer Drawer Support Assembly." A certified copy of the '980 Patent accompanies this Complaint as Exhibit 5. A copy of the assignment to Maytag accompanies this Complaint as Exhibit 10. Whirlpool Corporation was listed inadvertently as the assignee on the '980 Patent due to an administrative error. Complainants are in the process of correcting this error with the U.S. Patent and Trademark Office to correctly reflect that Maytag Corporation is the proper assignee on the '980 Patent. Under Commission Rule 210.12(c)(2) and (3), also provided with this Complaint in Appendix 5 are: (a) four copies of the prosecution history of the '980 Patent; and (b) four copies of each patent and applicable pages of each technical reference mentioned in the prosecution of the '980 Patent. Complainants have requested a certified copy of the prosecution history of the '980 Patent from the U.S. Patent and Trademark Office, and will supplement with that certified copy as soon as possible.

Answer: Responding to paragraph 4.5, Respondents admit that the '980 Patent on its face indicates that it is entitled "Freezer Drawer Support Assembly." Respondents deny that the '980 Patent issued on December 6, 2005. Respondents admit that Exhibit 5 includes what is purported to be a copy of the '980 Patent. Respondents admit that Exhibit 10 includes what is purported to be a copy of an assignment to Maytag Corporation. Respondents admit that Appendix 5 includes what is purported to be (a) four copies of the prosecution history of the '980 Patent, and (b) four copies of each patent and

applicable pages of each technical reference mentioned in the prosecution of the '980 Patent. Respondents are otherwise without sufficient knowledge or information to form a belief as to the truth of the remaining allegations in paragraph 4.5 and therefore deny them.

4.6 The '130, '680, '644, '730, and '980 Patents are valid, enforceable, and in full force and effect.

Answer: Responding to paragraph 4.6, Respondents deny the allegations of this paragraph.

B. Non-Technical Description of the Patents.

The '130 Patent.

4.7 One performance feature relating to ice production in refrigerator products that Whirlpool and Maytag both incorporated into their refrigerator products during the advent of side-by-side refrigerator models was an ice storage bin and dispenser on the door. Existing ice dispensing systems involved an ice storage bin and motorized mechanism for moving ice pieces out of the storage bin mounted within the freezer compartment under an icemaker, and an opening in the ice storage bin that is connected to or aligned with the ice dispenser in the freezer door when the door is closed. The '130 Patent modifies this conventional design by mounting the storage bin along with the mechanism for transferring ice from the storage bin to the dispenser on the inside of a door. This modified design - sometimes referred to as the "in-door ice" concept - permits easier access to the storage bin and also increases storage capacity in the freezer compartment for other frozen items.

Answer: Responding to paragraph 4.7, Respondents deny Complainants' characterization of the '130 Patent's disclosure and state that the '130 Patent speaks for itself. Respondents are otherwise without sufficient knowledge or information to form a belief as to the truth of the remaining allegations in paragraph 4.7 and therefore deny them.

4.8 Seven Whirlpool engineers developed and first disclosed refrigerators having "indoor ice" in the '130 Patent. The refrigerators disclosed and claimed include a freezer compartment with an ice dispenser in the door wherein an icemaker in the freezer compartment produces ice stored in a storage bin mounted on the inside of the door. Disposed within the storage bin is an auger connected to a motor, which, when the motor is energized, rotates to move ice pieces in the storage bin through an opening in the bottom of the bin to the ice dispenser in the door. These features are recited in independent claim 1 of the '130 Patent. Figures 2 and 3 of the '130 Patent illustrate one representative embodiment of the system.

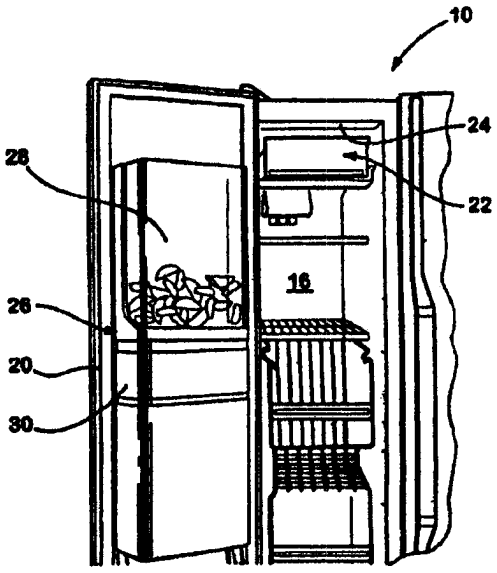

Fig. 2

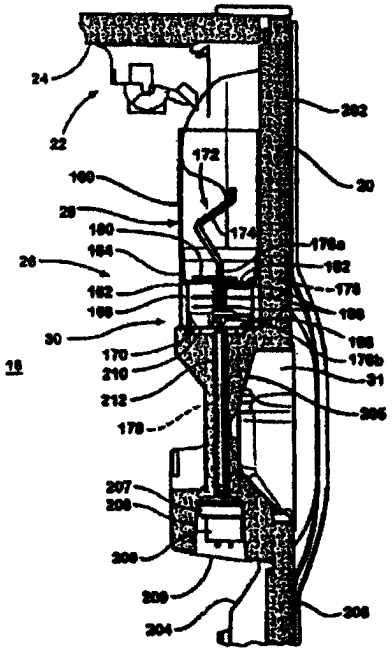

Fig. 3

In this embodiment, an auger (element 172) in the ice storage bin (element 28) is connected to a motor (element 200). In certain embodiments, the refrigerator also includes one or more crushing blades disposed in the ice storage bin which may be used to crush the ice pieces into

smaller pieces before they are dispensed through a dispenser (element 31). These elements are added and further described, for example, in dependent claims 5 and 6.

Answer: Responding to paragraph 4.8, Respondents deny Complainants' characterization of the '130 Patent's disclosure and state that the '130 Patent speaks for itself. Respondents are otherwise without sufficient knowledge or information to form a belief as to the truth of the remaining allegations in paragraph 4.8 and therefore deny them.

The '680 and '644 Patents.

4.9 For any refrigerator product having an automatic icemaker, a necessary component of that product is a tube or other means for filling the ice mold in the icemaker with water. One problem encountered with such fill tubes is the tendency of the water in the tube to freeze before it reaches the ice mold. This phenomenon not only hinders the effective operation of the icemaker, but in some cases causes the fill tube to rupture, requiring disconnection of the ice fill tube from its water supply. Maytag refrigerator products in the market prior to the implementation of the '680 and '644 Patents' technology had a service incident rate ("SIR") for problems involving rupture of the ice fill tube of about 5% (*i.e.*, 50,000 failures for every 1 million products). Prior solutions to this problem generally required the use of a heater to prevent the fill tube and its contents from freezing, but this additional heater added significant cost to the manufacture and maintenance of the refrigerator unit, and decreased the energy efficiency at which the overall unit was able to operate.

Answer: Responding to paragraph 4.9, Respondents deny Complainants' characterization of the '680 and '644 Patents' disclosure and state that the '680 and '644 Patents speak for themselves. Respondents are otherwise without sufficient knowledge or information to form a belief as to the truth of the remaining allegations in paragraph 4.9 and therefore deny them.

4.10 Maytag engineers developed a unique solution to this problem, which is now claimed in the '680 and '644 Patents. One aspect of this solution involved inserting the ice fill tube into the freezer compartment through a hole in the freezer compartment's inner liner with a certain "clearance" between the inner diameter of the hole and the outer diameter of the tube. This clearance communicated with the space between the outer wall and the inner liner of the freezer compartment where heat is generated. The heat is permitted to circulate through the clearance to the area of the freezer compartment immediately surrounding the fill tube, thereby preventing ice formation on the surface of or within the tube. This element is recited in independent claims 1 and 6 of the '680 Patent. Another aspect of this solution disclosed in the '680 and '644 Patents includes one or more vents formed along the length of the fill tube that further aid in preventing ice formation in the fill tube. This element is recited in independent claim 1 and dependent claim 7 of the '680 Patent and independent claims 1 and 6 of the '644 Patent. Those vents are further described in dependent claims 3-5 and 7-9 of the '680 Patent and dependent claims 2 and 8 of the '644 Patent. Figure 2 of the '680 Patent illustrates an exemplary embodiment of the inventions claimed in the '680 and '644 Patents.

FIG. 2

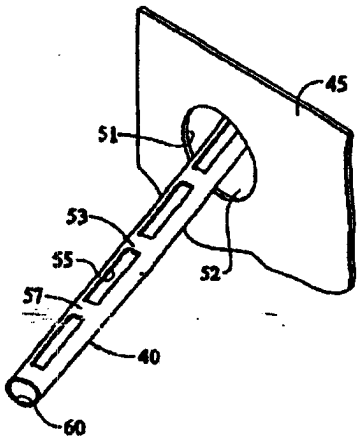

This figure shows the opening (element 51) in the inner liner (element 45) of the freezer through which the fill tube (element 40) is inserted with a clearance (element 52) between the outer surface of the tube and the edges of the opening, as well as the vents (element 55) in the top portion of the fill tube along its length. The implementation of this solution reduced the SIR for problems involving the rupture of a frozen fill tube from its prior level of 5% to almost zero.

Answer: Responding to paragraph 4.10, Respondents deny Complainants' characterization of the '680 and '644 Patents' disclosure and state that the '680 and '644 Patents speak for themselves. Respondents are otherwise without sufficient knowledge or information to form a belief as to the truth of the remaining allegations in paragraph 4.10 and therefore deny them.

The '730 and '980 Patents.

4.11 One of the most recent shifts in the household refrigerator market has been the popularization of the bottom-mount pull out drawer freezer models appearing around 2001. *See, e.g.*, Exhibit 16-C, Figure 2. One of the design challenges presented with these models was the attachment of a supporting structure to the side walls of the freezer compartment liner on which

the drawer could be slidably supported. However, attachment of such a structure to the thin plastic wall of the freezer compartment liner required the formation of unwanted holes in the liner, and in some cases, the side wall of the liner to which the structure was attached would be unable to bear heavy loads placed in the freezer drawer, causing damage to the liner.

Answer: Responding to paragraph 4.11, Respondents are without sufficient knowledge or information to form a belief as to the truth of the allegations in this paragraph and therefore deny them.

4.12 Additionally, whatever supporting structures installed on the side walls of the freezer compartment on which the freezer drawer travels need to be parallel to ensure smooth, unobstructed sliding of the drawer. Conventional freezer compartment liners in most household refrigerator models are formed such that the side walls of the liner are tapered or drafted slightly toward the back wall. However, these tapers and/or drafts make the side walls of the liner not parallel, which presented additional challenges to the design of a smoothly sliding freezer drawer.

Answer: Responding to paragraph 4.12, Respondents are without sufficient knowledge or information to form a belief as to the truth of the allegations in this paragraph and therefore deny them.

4.13 Maytag engineer Bill Koons devised and developed the idea of using a pair of adapter pieces that can be installed on the side walls of the freezer compartment liner in a manner that provides improved support for the drawer slides mounted thereon. A pair of extensible drawer slides then may be mounted on the sides of the adapters facing the center of the freezer compartment, which can support a basket to complete the drawer assembly. These elements are recited in one or more of independent claims 1, 2, and 22 of the '730 Patent and independent claims 1 and 8 of the '980 Patent.

Answer: Responding to paragraph 4.13, Respondents deny Complainants' characterization of the '730 and '980 Patents' disclosure and state that the '730 and '980 Patents speak for themselves. Respondents are otherwise without sufficient knowledge or information to form a belief as to the truth of the remaining allegations in paragraph 4.13 and therefore deny them.

4.14 Exemplary embodiments of the claimed refrigerators and the adapter used in the claimed inventions of the '730 and '980 Patents are illustrated in Figures 1, 2 (front view of adapter), and 3 (back view of adapter) of the '980 Patent.

FIG. 1

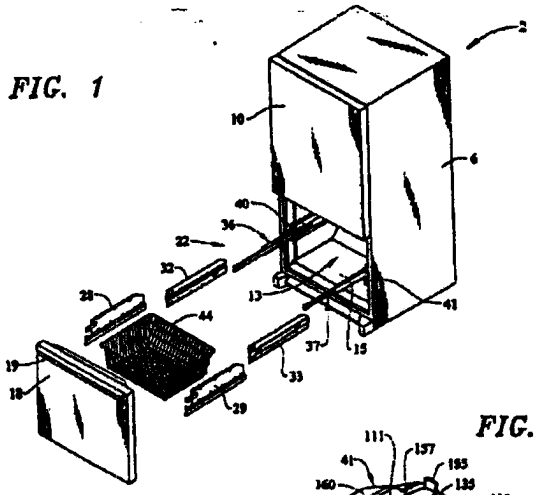

FIG. 3

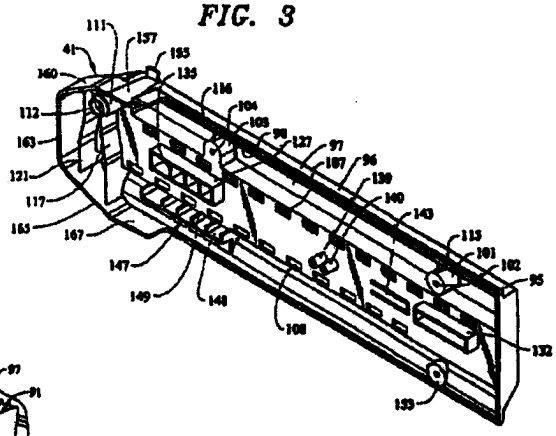

FIG. 2

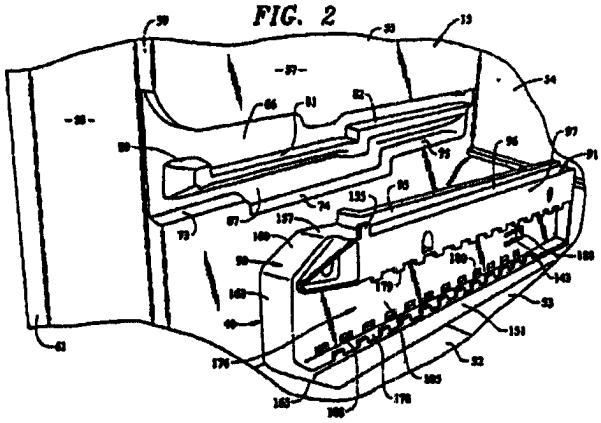

As shown, a channel (element 176 in Figure 2) on an adapter (elements 40 and 41) defines a space that receives an extensible drawer slide (element 36 in Figure 1). These elements also are recited in independent claims 1 and 2 and dependent claim 27 of the '730 Patent, and are further specified in dependent claims 9, 10, and 24 of the '730 Patent. These elements also are recited in independent claims 1 and 8 of the '980 Patent, and are further specified in claims 2-5 and 11 of the '980 Patent. The adapter shown in Figures 2 and 3 also includes a cantilevered member (element 143) that projects into the channel and "snap-fits" the drawer slide inserted into the channel. These elements are recited in dependent claims 11 and 23 of the '730 Patent and claims 6 and 8 of the '980 Patent.

Answer: Responding to paragraph 4.14, Respondents deny Complainants' characterization of the '730 and '980 Patents' disclosure and state that the '730 and '980 Patents speak for themselves. Respondents are otherwise without sufficient knowledge or information to form a belief as to the truth of the remaining allegations in paragraph 4.14 and therefore deny them.

4.15 Koons' solution also solved the problem associated with the taper and/or draft of the side walls of the liner by forming the adapter pieces with a taper or draft in the opposite direction (*i.e.*, back to front), such that the opposing surfaces of a pair of adapters, when installed in the freezer compartment, would be parallel to each other. This feature is recited in independent claims 1 and 2, and dependent claim 29, of the '730 Patent and claims 1 and 13 of the '980 Patent.

Answer: Responding to paragraph 4.15, Respondents deny Complainants' characterization of the '730 and '980 Patents' disclosure and state that the '730 and '980 Patents speak for themselves. Respondents are otherwise without sufficient knowledge or information to form a belief as to the truth of the remaining allegations in paragraph 4.15 and therefore deny them.

C. Licenses Under the Whirlpool and Maytag Patents.

4.16 Whirlpool Patents has nonexclusively licensed rights under the '130 Patent to Whirlpool Manufacturing, which in turn has nonexclusively licensed rights in the '130 Patent to Whirlpool Corporation. There are no additional licenses of rights under the '130 Patent.

Answer: Responding to paragraph 4.16, Respondents are without sufficient knowledge or information to form a belief as to the truth of the allegations in this paragraph and therefore deny them.

4.17 Under Commission Rule 210.12(c)(1), three copies of the agreements licensing rights under the '130 Patent accompany this Complaint in Confidential Appendix 1. These agreements are confidential.

Answer: Responding to paragraph 4.17, Respondents are without sufficient knowledge or information to form a belief as to the truth of the allegations in this paragraph and therefore deny them.

4.18 Maytag has not licensed any rights under the '680, '644, '730, or '980 Patent.

Answer: Responding to paragraph 4.18, Respondents are without sufficient knowledge or information to form a belief as to the truth of the allegations in this paragraph and therefore deny them.

D. Foreign Counterpart Applications.

4.19 Attached hereto as Exhibit 11 is a chart listing each foreign patent issued and each foreign patent application (not already issued as a patent) corresponding to each of the '130, '680, '644, '730, and '980 Patents. Exhibit 11 also includes an indication of the prosecution status of each foreign patent application. No foreign application corresponding to any of the '130, '680, '644, '730, or '980 Patent has been denied.

Answer: Responding to paragraph 4.19, Respondents are without sufficient knowledge or information to form a belief as to the truth of the allegations in this paragraph and therefore deny them.

V. THE LG ENTITIES' PATENT INFRINGEMENT

A. The LG Entities' Infringing Products

5.1 Representative claim 1 of the '130 Patent is reproduced in the Claim Chart 1 provided in Exhibit 12. Also provided in Exhibit 12-A are photographs of a representative LG refrigerator product that bears the model number LSC27950SW. Portions of the photographs are labeled with numbers corresponding to the numbered parts in the description of the LG refrigerator product in Claim Chart 1. As demonstrated by this claim chart and photographs in Exhibit 12-A, the representative LG refrigerator product includes every element of claim 1 of the '130 Patent. Complainants assert that Respondents infringe at least claims 1,2,4,6, 8, and 9 of the '130 Patent.

Answer: Responding to paragraph 5.1, Respondents admit that claim 1 of the '130 Patent is reproduced in the Claim Chart 1 provided in Exhibit 12. Respondents deny that the claim chart and photographs in Exhibit 12-A demonstrate that the representative LG refrigerator includes every element of claim 1 of the '130 Patent. Respondents deny that Respondents infringe any valid and enforceable claim of the '130 Patent. Respondents are without sufficient knowledge or information to form a belief as to the truth of the remaining allegations in paragraph 5.1 and therefore deny them.

5.2 Representative claim 1 of the '680 Patent is reproduced in Claim Charts 2a and 2b provided in Exhibit 12. Provided in Exhibit 12-B1 are photographs of a representative LG refrigerator product that bears the model number LSC26905SB. Provided in Exhibit 12-B2 are photographs of a representative Kenmore®-branded refrigerator product that, on information and belief, is manufactured, imported, sold for importation, and/or sold after importation by LG and bears the model number 795.77719700. Portions of the photographs are labeled with numbers corresponding to the numbered parts in the description of the LG and Kenmore®-branded

refrigerator products in Claim Charts 2a and 2b. As demonstrated by these claim charts and the photographs in Exhibits 12-B1 and 12-B2, the representative LG and Kenmore®-branded refrigerator products include every element of claim 1 of the '680 Patent. Complainants assert that Respondents infringe at least claims 1-14 of the '680 Patent.

Answer: Responding to paragraph 5.2, Respondents admit that claim 1 of the '680 Patent is reproduced in the Claim Charts 2a and 2b provided in Exhibit 12. Respondents deny that the claim charts and photographs in Exhibits 12-B1 and 12-B2 demonstrate that the representative LG and Kenmore®-branded refrigerator products include every element of claim 1 of the '680 Patent. Respondents deny that Respondents infringe any valid and enforceable claim of the '680 Patent. Respondents are without sufficient knowledge or information to form a belief as to the truth of the remaining allegations in paragraph 5.2 and therefore deny them.

5.3 Representative claim 6 of the '644 Patent is reproduced in Claim Charts 3a and 3b provided in Exhibit 12. Provided in Exhibit 12-B1 are photographs of a representative LG refrigerator product that bears the model number LSC26905SB. Provided in Exhibit 12-B2 are photographs of a representative Kenmore®-branded refrigerator product that, on information and belief, is manufactured, imported, sold for importation, and/or sold after importation by LG and bears the model number 795.77719700. Portions of the photographs are labeled with numbers corresponding to the numbered parts in the description of the LG and Kenmore®-branded refrigerator products in Claim Charts 3a and 3b. As demonstrated by these claim charts and the photographs in Exhibits 12-B1 and 12-B2, the representative LG and Kenmore®-branded refrigerator products include every element of claim 6 of the '644 Patent. Complainants assert that Respondents infringe at least claims 1-13 of the '644 Patent.

Answer: Responding to paragraph 5.3, Respondents admit that claim 6 of the '644 Patent is reproduced in the Claim Charts 3a and 3b provided in Exhibit 12. Respondents deny that the claim charts and photographs in Exhibits 12-B1 and 12-B2 demonstrate that the representative LG and Kenmore®-branded refrigerator products include every element of

claim 6 of the '644 Patent. Respondents deny that Respondents infringe any valid and enforceable claim of the '644 Patent. Respondents are without sufficient knowledge or information to form a belief as to the truth of the remaining allegations in paragraph 5.3 and therefore deny them.

5.4 Representative claim 2 of the '730 Patent is reproduced in Claim Charts 4a and 4b provided in Exhibit 12. Provided in Exhibit 12-Cl are photographs of a representative LG refrigerator product that bears the model number LFX25980ST. Provided in Exhibit 12-C2 are photographs of a representative Kenmore®-branded refrigerator product that, on information and belief, is manufactured, imported, sold for importation, and/or sold after importation by LG and bears the model number 795.77562600. Portions of the photographs are labeled with numbers corresponding to the numbered parts in the description of the LG and Kenmore®-branded refrigerator products in Claim Charts 4a and 4b. As demonstrated by these claim charts and the photographs in Exhibits 12-Cl and 12-C2, the representative LG and Kenmore®-branded refrigerator products include every element of claim 2 of the '730 Patent. Complainants assert that Respondents infringe at least claims 2, 3, 7-12, 22-24, and 29 of the '730 Patent.

Answer: Responding to paragraph 5.4, Respondents admit that claim 2 of the '730 Patent is reproduced in the Claim Charts 4a and 4b provided in Exhibit 12. Respondents deny that the claim charts and photographs in Exhibits 12-C1 and 12-C2 demonstrate that the representative LG and Kenmore®-branded refrigerator products include every element of claim 2 of the '730 Patent. Respondents deny that Respondents infringe any valid and enforceable claim of the '730 Patent. Respondents are without sufficient knowledge or information to form a belief as to the truth of the remaining allegations in paragraph 5.4 and therefore deny them.

5.5 Representative claim 1 of the '980 Patent is reproduced in Claim Charts 5a and 5b provided in Exhibit 12. Provided in Exhibit 12-Cl are photographs of a representative LG refrigerator product that bears the model number LFX25980ST. Provided in Exhibit 12-C2 are photographs of a representative Kenmore®-branded refrigerator product that, on information and

belief, is manufactured, imported, sold for importation, and/or sold after importation by LG and bears the model number 795.77562600. Portions of the photographs are labeled with numbers corresponding to the numbered parts in the description of the LG and Kenmore®-branded refrigerator products in Claim Charts 5a and 5b. As demonstrated by these claim charts and the photographs in Exhibits 12-Cl and 12-C2, the representative LG and Kenmore®-branded refrigerator products include every element of claim 1 of the '980 Patent. Complainants assert that Respondents infringe at least claims 1 and 3-20 of the '980 Patent.

Answer: Responding to paragraph 5.5, Respondents admit that claim 1 of the '980 Patent is reproduced in the Claim Charts 5a and 5b provided in Exhibit 12. Respondents deny that the claim charts and photographs in Exhibits 12-C1 and 12-C2 demonstrate that the representative LG and Kenmore®-branded refrigerator products include every element of claim 1 of the '980 Patent. Respondents deny that Respondents infringe any valid and enforceable claim of the '980 Patent. Respondents are without sufficient knowledge or information to form a belief as to the truth of the remaining allegations in paragraph 5.5 and therefore deny them.

B. The LG Entities' Unlawful Importation.

5.6 Upon information and belief, the LG Entities presently import, sell for importation, and/or sell or offer for sale within the United States after importation, refrigerators and components thereof that infringe claims of the '130, '680, '644, '730, and '980 Patents.

Answer: Responding to paragraph 5.6, Respondents deny that they presently import, sell for importation, and/or sell or offer for sale within the United States after importation, refrigerators and components thereof that infringe any valid and enforceable claims of the '130, '680, '644, '730, and '980 Patents.

5.7 Upon information and belief, at least some of the refrigerators and components thereof that infringe claims of the '130, '680, '644, '730, and '980 Patents imported, sold for importation, and/or sold or offered for sale within the United States after importation by the LG Entities are branded with the Kenmore® brand owned by Sears or with the GE® brand owned by

General Electric. Upon information and belief, one or more of the LG Entities sell such refrigerators to Sears and/or General Electric for importation into the United States, and such refrigerators currently are sold in the United States. Exemplary Kenmore®-branded infringing refrigerator products sold by Sears within the United States that, on information and belief, are manufactured, imported, sold for importation, and/or sold after importation by LG include the refrigerator products pictured in Exhibits 12-B2 and 12-C2.

Answer: Responding to paragraph 5.7, Respondents deny that they import, sell for importation, and/or sell or offer for sale within the United States after importation, refrigerators and components branded with the Kenmore® brand owned by Sears or with the GE® brand owned by General Electric that infringe any valid and enforceable claims of the '130, '680, '644, '730, and '980 Patents. Respondents admit that one or more of the LG Entities sell refrigerator products to Sears and/or General Electric, who in turn sell those products in the United States. Respondents are without sufficient knowledge or information to form a belief as to the truth of the remaining allegations in paragraph 5.7 and therefore deny them.

5.8 Attached as Exhibit 13 to this Complaint is the sales receipt from the purchase of the LG refrigerator products that are pictured and described in Exhibits 12-A, 12-Bl, and 12-Cl showing that these refrigerator products were purchased in St. Joseph, Michigan on behalf of Whirlpool on or about January 8, 2008. Attached as Exhibit 14 to this Complaint is the sales receipt from the purchase of the representative Kenmore®-branded infringing refrigerator product pictured and described in Exhibit 12-B2 that, on information and belief, was manufactured, imported, sold for importation, and/or sold after importation by LG. Exhibit 14 shows that this product was purchased in Benton Harbor, Michigan on behalf of Whirlpool on or about January 7, 2008. Attached as Exhibit 15 to this Complaint is the sales receipt from the purchase of the representative Kenmore®-branded infringing refrigerator product pictured and described in Exhibit 12-C2 that, on information and belief, was manufactured, imported, sold for importation,

and/or sold after importation by LG. Exhibit 15 shows that this product was purchased in Benton Harbor, Michigan on behalf of Whirlpool on or about January 7, 2008. As shown in Figure 1 of each of Exhibits 12-A, 12-Bl, 12-B2, 12-Cl, and 12-C2, those representative products were manufactured in Korea and Mexico.

Answer: Responding to paragraph 5.8, Respondents are without sufficient knowledge or information to form a belief as to the truth of the allegations in this paragraph and therefore deny them.

VI. THE DOMESTIC INDUSTRY

6.1 A domestic industry, as defined in 19 U.S.C. § 1337(a)(3), exists, and additionally or alternatively, is in the process of being established, in connection with Complainants' activities, related to the inventions protected under the '130, '680, '644, '730, and '980 Patents. A domestic industry exists and/or is in the process of being established based on the domestic manufacture, research, development, sales, and marketing-related expenditures made by Complainants, either directly or by their wholly owned subsidiaries, in connection with numerous refrigerator products that include the following features: (a) in-door-ice delivery systems covered by the '130 Patent; (b) vented icemaker fill tube assemblies covered by the '680 and '644 Patents; and (c) pull out drawer freezers covered by the '730 and '980 Patents. Section A below demonstrates how certain exemplary products made by Complainants include each of the features covered by the asserted patents. Sections B through D below describe Complainants' domestic expenditures associated with products that include features covered by the asserted patents.

Answer: Responding to paragraph 6.1, Respondents are without sufficient knowledge or information to form a belief as to the truth of the allegations in this paragraph and therefore deny them.

A. Complainants' Practice of the Asserted Patents.

6.2 Representative claim 1 of the '130 Patent is reproduced in Claim Chart 1 provided in Exhibit 16. Also provided in Exhibit 16-A are photographs of a representative refrigerator product of Complainants that bears the model number ED5FHAXSQO1. Portions of the photographs are labeled with numbers corresponding to the numbered parts in the description of the refrigerator product in Claim Chart 1. As demonstrated by the claim chart and the photographs in Exhibit 16-A, the representative refrigerator product of Complainants includes every element of claim 1 of the '130 Patent.

Answer: Responding to paragraph 6.2, Respondents admit that claim 1 of the '130 Patent is reproduced in Claim Chart 1 provided in Exhibit 16. Respondents are without sufficient knowledge or information to form a belief as to the truth of the remaining allegations in this paragraph and therefore deny them.

6.3 Representative claim 1 of the '680 Patent is reproduced in Claim Chart 2 provided in Exhibit 16. Also provided in Exhibit 16-B are photographs of a representative refrigerator product of Complainants that bears the model number MZD2666KEW. Portions of the photographs are labeled with numbers corresponding to the numbered parts in the description of the refrigerator product in Claim Chart 2. As demonstrated by this claim chart and the photographs in Exhibit 16-B, the representative refrigerator product of Complainants includes every element of claim 1 of the '680 Patent.

Answer: Responding to paragraph 6.3, Respondents admit that claim 1 of the '680 Patent is reproduced in Claim Chart 2 provided in Exhibit 16. Respondents are without sufficient knowledge or information to form a belief as to the truth of the remaining allegations in this paragraph and therefore deny them.

6.4 Representative claim 6 of the '644 Patent is reproduced in Claim Chart 3 provided in Exhibit 16. Also provided in Exhibit 16-B are photographs of a representative refrigerator product of Complainants that bears the model number MZD2666KEW. Portions of the photographs are labeled with numbers corresponding to the numbered parts in the description of the refrigerator product in Claim Chart 3. As demonstrated by this claim chart and the photographs in Exhibit 16-B, the representative refrigerator product of Complainants includes every element of claim 6 of the '644 Patent.

Answer: Responding to paragraph 6.4, Respondents admit that claim 6 of the '644 Patent is reproduced in Claim Chart 3 provided in Exhibit 16. Respondents are without sufficient knowledge or information to form a belief as to the truth of the remaining allegations in this paragraph and therefore deny them.

6.5 Representative claim 2 of the '730 Patent is reproduced in Claim Chart 4 provided in Exhibit 16. Also provided in Exhibit 16-C are photographs of a representative refrigerator product of Complainants that bears the model number MFI2568AES. Portions of the photographs are labeled with numbers corresponding to the numbered parts in the description of the refrigerator product in Claim Chart 4. As demonstrated by this claim chart and the photographs in Exhibit 16-C, the representative refrigerator product of Complainants includes every element of claim 2 of the '730 Patent.

Answer: Responding to paragraph 6.5, Respondents admit that claim 2 of the '730 Patent is reproduced in Claim Chart 4 provided in Exhibit 16. Respondents are without sufficient knowledge or information to form a belief as to the truth of the remaining allegations in this paragraph and therefore deny them.

6.6 Representative claim 1 of the '980 Patent is reproduced in Claim Chart 5 provided in Exhibit 16-C. Also provided in Exhibit 16-C are photographs of a representative refrigerator product of Complainants that bears the model number MFI2568AES. Portions of the

photographs are labeled with numbers corresponding to the numbered parts in the description of the refrigerator product in Claim Chart 5. As demonstrated by this claim chart and the photographs in Exhibit 16-C, the representative refrigerator product of Complainants includes every element of claim 1 of the '980 Patent.

Answer: Responding to paragraph 6.6, Respondents admit that claim 1 of the '980 Patent is reproduced in Claim Chart 5 provided in Exhibit 16. Respondents are without sufficient knowledge or information to form a belief as to the truth of the remaining allegations in this paragraph and therefore deny them.

B. Complainants' Significant Investment in Plant and Equipment.

6.7 Complainants have made significant investments in plant and equipment as contemplated by Section 337(a)(3) in the form of investments in domestic facilities used for the manufacture, engineering, and/or research and development in connection with Complainants' covered products in at least the following locations: Evansville, Indiana; Amana, Iowa; Fort Smith, Arkansas; and La Vergne, Tennessee.

Answer: Responding to paragraph 6.7, Respondents are without sufficient knowledge or information to form a belief as to the truth of the allegations in this paragraph and therefore deny them.

6.8 Complainants' operating costs for operating the foregoing facilities in 2006 and 2007 are substantial, as described in Declaration of Todd S Melton ("Melton Declaration"), which is attached as Confidential Exhibit 1 to this Complaint. The information contained in that Declaration is confidential. The expenditures described therein include costs to supply power to the facilities, maintenance, costs associated with equipment and/or equipment repair. *(See* Confidential Exhibit I, Melton Declaration, ¶¶ 6-8).

Answer: Responding to paragraph 6.8, Respondents admit only that the identified exhibit speaks for itself. Respondents are without sufficient knowledge or information to form a

belief as to the truth of the remaining allegations in this paragraph and therefore deny them.

C. Complainants' Significant Employment of Labor or Capital.

6.9 Complainants have made significant employment of labor and capital as contemplated by Section 337(a)(3) in the form of at least the following: employees and labor associated salaries, wages, and benefits; costs associated with all aspects of the development and production of Complainants' covered products; and investments in materials necessary for the manufacture of Complainants' covered products. Specifically, Complainants employ 1,124, 2,057, 2,310, and 523 employees at their facilities in Evansville, Amana, Fort Smith, and La Vergne, respectively. (*See* Confidential Exhibit 1, Melton Declaration, ¶ 4). A substantial number of such employees are involved in some aspect of the development, engineering, manufacture, promotion, or other activities related to sales of the Complainants' covered products. (*See* Confidential Exhibit 1, Melton Declaration, ¶ 4). Further, in 2006 and 2007, Complainants' total capital expenditures in connection with activities in connection with their covered products were substantial. (*See* Confidential Exhibit I, Melton Declaration, ¶¶ 5-9). The expenditures made in connection with Complainants' covered refrigerator products for each of the '130, '680, '644, '730, and '980 Patents are discussed below. Because each of Complainants' covered products may be covered by more than one of these patents, the expenditures attributable to each of the patents may overlap in some cases.

Answer: Responding to paragraph 6.9, Respondents admit only that the identified exhibit speaks for itself. Respondents are without sufficient knowledge or information to form a belief as to the truth of the remaining allegations in this paragraph and therefore deny them.

6.10 With respect to expenditures made in connection with the '130 Patent, Complainants made substantial domestic expenditures during 2006 and 2007 in production costs associated with Complainants' covered refrigerator products. (*See* Confidential Exhibit 1, Melton Declaration, ¶ 6). Complainants made substantial domestic expenditures during 2006 and 2007 on other costs, such as freight, warehousing, and warranty costs associated with Complainants' covered refrigerator products. (*See* Confidential Exhibit 1, Melton Declaration, ¶ 6). Complainants made substantial domestic expenditures during 2006 and 2007 on sales and promotional activities such as brand-based sales activities (*e.g.*, point-of-sale materials, consumer incentives/rebates, and media expenses), trade-based sales activities (*e.g.*, training, incentives and other marketing activities with trade partners), and sales allowances associated with Complainants' covered refrigerator products. (*See* Confidential Exhibit 1, Melton Declaration, ¶ 6).

Answer: Responding to paragraph 6.10, Respondents admit only that the identified exhibit speaks for itself. Respondents are without sufficient knowledge or information to form a belief as to the truth of the remaining allegations in this paragraph and therefore deny them.

6.11 With respect to expenditures made in connection with the '680 Patent, Complainants made substantial domestic expenditures during 2006 and 2007 in production costs associated with Complainants' covered refrigerator products. (*See* Confidential Exhibit 1, Melton Declaration, ¶ 7). Complainants made substantial domestic expenditures during 2006 and 2007 on other costs, such as freight, warehousing, and warranty costs associated with Complainants' covered refrigerator products. (*See* Confidential Exhibit 1, Melton Declaration, ¶ 7). Complainants made substantial domestic expenditures during 2006 and 2007 on sales and

promotional activities such as brand-based sales activities (*e.g.*, point-of-sale materials, consumer incentives/rebates, and media expenses), trade-based sales activities (*e.g.*, training, incentives and other marketing activities with trade partners), and sales allowances associated with Complainants' covered refrigerator products. (*See* Confidential Exhibit 1, Melton Declaration, ¶ 7).

Answer: Responding to paragraph 6.11, Respondents admit only that the identified exhibit speaks for itself. Respondents are without sufficient knowledge or information to form a belief as to the truth of the remaining allegations in this paragraph and therefore deny them.

6.12 With respect to expenditures made in connection with the '644 Patent, Complainants made substantial domestic expenditures during 2006 and 2007 in production costs associated with Complainants' covered refrigerator products. (*See* Confidential Exhibit 1, Melton Declaration, ¶ 7). Complainants made substantial domestic expenditures during 2006 and 2007 on other costs, such as freight, warehousing, and warranty costs associated with Complainants' covered refrigerator products. (*See* Confidential Exhibit 1, Melton Declaration, ¶ 7). Complainants made substantial domestic expenditures during 2006 and 2007 on sales and promotional activities such as brand-based sales activities (*e.g.*, point-of-sale materials, consumer incentives/rebates, and media expenses), trade-based sales activities (*e.g.*, training, incentives and other marketing activities with trade partners), and sales allowances associated with Complainants' covered refrigerator products. (*See* Confidential Exhibit 1, Melton Declaration, ¶ 7).

Answer: Responding to paragraph 6.12, Respondents admit only that the identified exhibit speaks for itself. Respondents are without sufficient knowledge or information to form a belief as to the truth of the remaining allegations in this paragraph and therefore deny them.

6.13 With respect to expenditures made in connection with the '730 Patent, Complainants made substantial domestic expenditures during 2006 and 2007 in production costs associated with Complainants' covered refrigerator products. (*See* Confidential Exhibit 1, Melton Declaration, ¶ 8). Complainants made substantial domestic expenditures during 2006 and 2007 on other costs, such as freight, warehousing, and warranty costs associated with Complainants' covered refrigerator products. (*See* Confidential Exhibit 1, Melton Declaration, ¶ 8). Complainants made substantial domestic expenditures during 2006 and 2007 on sales and promotional activities such as brand-based sales activities (*e.g.*, point-of-sale materials, consumer incentives/rebates, and media expenses), trade-based sales activities (*e.g.*, training, incentives and other marketing activities with trade partners), and sales allowances associated with Complainants' covered refrigerator products. (*See* Confidential Exhibit 1, Melton Declaration, ¶ 8).

Answer: Responding to paragraph 6.13, Respondents admit only that the identified exhibit speaks for itself. Respondents are without sufficient knowledge or information to form a belief as to the truth of the remaining allegations in this paragraph and therefore deny them.

6.14 With respect to expenditures made in connection with the '980 Patent, Complainants made substantial domestic expenditures during 2006 and 2007 in production costs associated with Complainants' covered refrigerator products. (*See* Confidential Exhibit 1, Melton Declaration, ¶ 8). Complainants made substantial domestic expenditures during 2006 and 2007 on other costs, such as freight, warehousing, and warranty costs associated with Complainants' covered refrigerator products. (*See* Confidential Exhibit 1, Melton Declaration, ¶ 8). Complainants made substantial domestic expenditures during 2006 and 2007 on sales and

promotional activities such as brand-based sales activities (*e.g.*, point-of-sale materials, consumer incentives/rebates, and media expenses), trade-based sales activities (*e.g.*, training, incentives and other marketing activities with trade partners), and sales allowances associated with Complainants' covered refrigerator products. (*See* Confidential Exhibit 1, Melton Declaration, ¶ 8).

Answer: Responding to paragraph 6.14, Respondents admit only that the identified exhibit speaks for itself. Respondents are without sufficient knowledge or information to form a belief as to the truth of the remaining allegations in this paragraph and therefore deny them.

D. Complainants' Substantial Investment in the Exploitation of the Subject Patents, Including Engineering, and Research and Development.

6.15 Complainants have made substantial investments in the exploitation of the subject patents, including engineering, and research and development. The Complainants' substantial investment in the exploitation of the subject patents can be seen by reference to the volume of covered refrigerator products domestically manufactured and then sold by Complainants during 2006 and 2007 alone. Specifically, in connection with products covered by the '130 Patent, in 2006 and 2007, Complainants manufactured and sold substantial quantities of covered units, with substantial net sales revenues. (*See* Confidential Exhibit 1, Melton Declaration, ¶ 10). In connection with products covered by the '680 Patent, in 2006 and 2007, Complainants manufactured and sold substantial quantities of covered units, with substantial net sales revenues. (*See* Confidential Exhibit 1, Melton Declaration, ¶ 10). In connection with products covered by the '644 Patent, in 2006 and 2007, Complainants manufactured and sold substantial quantities of covered units, with substantial net sales revenues. (*See* Confidential Exhibit 1, Melton Declaration, ¶ 10). In connection with products covered by the '730 Patent, in 2006 and 2007,

Complainants manufactured and sold substantial quantities of covered units, with substantial net sales revenues. (*See* Confidential Exhibit 1, Melton Declaration, ¶ 10). In connection with products covered by the '980 Patent, in 2006 and 2007, Complainants manufactured and sold substantial quantities of covered units, with substantial net sales revenues. (*See* Confidential Exhibit 1, Melton Declaration, ¶ 10).

Answer: Responding to paragraph 6.15, Respondents admit only that the identified exhibit speaks for itself. Respondents are without sufficient knowledge or information to form a belief as to the truth of the remaining allegations in this paragraph and therefore deny them.

6.16 Complainants' substantial inyestments can also be seen by reference to their engineering expenditures, which includes research and development costs for Complainants' covered refrigerator products. Specifically, in 2006 and 2007, Complainants made significant expenditures on engineering costs for products covered by the '130, '680, '644, '730, and '980 Patents. (*See* Confidential Exhibit 1, Melton Declaration, ¶ 9).

Answer: Responding to paragraph 6.16, Respondents admit only that the identified exhibit speaks for itself. Respondents are without sufficient knowledge or information to form a belief as to the truth of the remaining allegations in this paragraph and therefore deny them.

VII. CLASSIFICATIONS OF INFRINGING PRODUCTS UNDER THE HARMONIZED TARIFF SCHEDULE OF THE UNITED STATES

The refrigerators and components thereof that the LG Entities import, sell for importation, and/or sell after importation unlawfully and in violation of Whirlpool Patents' and Maytag's patent rights are classified in the Harmonized Tariff Schedule of the United States ("HTSUS") under HTSUS item numbers 8418.21.0030 and 8418.21.0090. These are exemplary numbers for illustration only and are not intended to be restrictive of the products accused.

Answer: Respondents deny that they import, sell for importation, and/or sell after importation refrigerators and components thereof that violate Whirlpool Patents' and Maytag's patent rights. Respondents also deny that the refrigerators and components thereof are classified in the Harmonized Tariff Schedule of the United States ("HTSUS") under HTSUS item numbers 8418.21.0030 and 8418.21.0090. Respondents are without sufficient knowledge or information to form a belief as to the truth of the remaining allegations in this paragraph and therefore deny them.

VIII. RELATED LITIGATION

The '130, '680, '644, '730, and '980 Patents have not been the subject of any court or agency proceeding. No foreign patent corresponding to the '130, '680, '644, '730, or '980 Patent has been the subject of any court or agency proceeding.

Answer: Respondents are without sufficient knowledge or information to form a belief as to the truth of the allegations in this paragraph and therefore deny them.

IX. RELIEF REQUESTED

Wherefore, Complainants request that the United States International Trade Commission:

(a) institute an investigation pursuant to Section 337 of the Tariff Act of 1930, as amended, 19 U.S.C. § 1337, into the unfair acts and methods of competition by the LG Entities in the importation, sale for importation, sale, and/or offer for sale after the importation within the United States, and/or the manufacture abroad for importation, sale, and/or offer for sale within the United States, of refrigerators and/or components thereof that infringe any of at least claims I, 2, 4, 6, 8, and 9 of the' 130 Patent, claims 1-14 of the '680 Patent, claims 1-13 of the '644 Patent, claims 2, 3, 7-12, 22-24, and 29 of the '730 Patent, or claims I and 3-20 of the '980 Patent;

(b) hold a public hearing for purposes of receiving evidence and hearing argument concerning whether there has been a violation of Section 337;

(c) determine that there has been a violation of Section 337;

(d) issue a permanent exclusion order pursuant to Section 337(d), excluding from entry into the United States refrigerators and/or components thereof manufactured, sold, assembled, imported, or sold for importation by or on behalf of any of the LG Entities that infringe any of at least claims I, 2, 4, 6, 8, and 9 of the '130 Patent, claims 1-14 of the '680 Patent, claims 1-13 of the '644 Patent, claims 2, 3, 7-12, 22-24, and 29 of the '730 Patent, or claims 1 and 3-20 of the '980 Patent;

(e) issue a permanent cease and desist order pursuant to Section 337(f), directing the LG Entities and their related companies to cease and desist their unfair acts and methods of competition, including importing, selling for importation, assembling, testing, marketing, distributing, offering for sale, selling, or otherwise transferring in the United States imported refrigerators and/or components thereof that infringe any of claims 1, 2, 4, 6, 8, and 9 of the '130 Patent, claims 1-14 of the '680 Patent, claims 1-13 of the '644 Patent, claims 2, 3, 7-12, 22-24, and 29 of the '730 Patent, or claims 1 and 3-20 of the '980 Patent; and

(f) issue such other and further relief as the Commission deems just and proper under the law, based upon the facts determined by the investigation and the authority of the Commission.

Answer: Respondents respond that the Complaint is unfounded and the relief requested by Complainants should be denied in its entirety.

INFORMATION REQUIRED UNDER COMMISSION RULE 210.13

Respondents understand the accused products in this Investigation to be LG refrigerator

products with model numbers LSC27950SW, LSC26905SB, and LFX25980ST, as well as Kenmore-branded refrigerator products with model numbers 795.77719700 and 795.77562600 (collectively "Accused Products"). Respondents presently understand that Accused Products are imported under Harmonized Tariff Schedule Code 8418.10.0040. The quantity and value of U.S. sales in 2007, of the Accused Products are [ ] Further, Respondents understand that the United States may be an important market for purchase of the Accused Products, and the Accused Products' sales in the United States are [ ] of Respondents' total sales worldwide.

Respondents assemble the Accused Products and it appears that Respondents produced [ ] of Accused Products in 2007. Respondents are continuing its investigation and will supplement this response if necessary.

AFFIRMATIVE DEFENSES

Respondents assert the following affirmative defenses. Respondents note that this Investigation is in its early stages and that discovery has just commenced. Accordingly, as this Investigation proceeds, Respondents reserve the right to modify and supplement their defenses and to assert additional defenses through discovery and other appropriate means under the Rules and procedures of the ITC and the Ground Rules of the Judge.

As part of their affirmative defenses and pleading of defenses, Respondents incorporate by reference the responses and denials set forth in Paragraphs 1.1 through 6.16, and the responses and denials as set forth in Sections VII, VIII, and XI above.

'130 PATENT: NONINFRINGEMENT

1. Respondents have not infringed and do not infringe any valid and/or enforceable claims of the '130 patent, either directly or indirectly. Complainants bear the burden to prove infringement of the '130 patent and have failed to assert any valid claims of infringement upon which relief can be granted.

2. In the Complaint, Complainants identified claim 1 of the '130 patent as "representative" of the asserted claims of this patent. Based on the claim chart for representative claim 1, Complainants are claiming that Respondents infringe.

3. The Respondents' accused products do not infringe representative claim 1. By means of example only, the accused products do not include "an ice maker being disposed within the freezer compartment for forming ice pieces," or "an ice storage bin ...for receiving ice from the ice maker," or "a motor mounted on the closure member," as recited by claim 1 of the '130 patent. Accordingly, regardless of how the remaining elements and limitations of representative claim 1 are construed, Respondents do not infringe this claim.

4. To the extent that any of the asserted claims of the '130 patent are somehow construed to avoid the prior art and not be invalid over the prior art, then Respondents do not practice or infringe the asserted claims.

'130 PATENT: INVALIDITY

5. The Asserted Claims of the '130 patent are invalid under the Patent Laws of the United States, 35 U.S.C. § 100 et seq., including, but not limited to, 35 U.S.C. §§ 102 and 103.

6. In the Complaint, Complainants identified claim 1 of the '130 patent as "representative" of the asserted claims of this patent.

7. Representative claim 1 of the '130 patent is invalid under 35 U.S.C. § 102. An illustrative example of the anticipatory prior art includes, but is not limited to, Japanese Utility Model Publication No. 51-21165 and Japanese Utility Model Publication No. 51-21173 (attached hereto as Exhibits 1 & 2).

8. Representative claim 1 of the '130 patent is invalid under 35 U.S.C. § 103. An illustrative example of the prior art rendering obvious this claim includes, but is not limited to, the prior art identified above and Japanese Patent Publication No. 49-50545, Japanese Utility Model Publication No. 51-148756 (attached hereto as Exhibits 3 & 4), as well as the prior art cited in the '130 patent and already of record.

'680 PATENT: NONINFRINGEMENT

9. Respondents have not infringed and do not infringe any valid and/or enforceable claims of the '680 patent, either directly or indirectly. Complainants bear the burden to prove infringement of the '680 patent and have failed to assert any valid claims of infringement upon which relief can be granted.

10. In the Complaint, Complainants identified claim 1 of the '680 patent as "representative" of the asserted claims of this patent. Based on the claim chart for representative claim 1, Complainants are claiming that Respondents infringe.

11. The Respondents' accused products do not infringe representative claim 1. By means of example only, the accused products do not include "a clearance between said inner wall and said fill tube to permit a flow of air about the fill tube through the clearance," as recited

by claim 1 of the '680 patent. Accordingly, regardless of how the remaining elements and limitations of representative claim 1 are construed, Respondents do not infringe this claim.

12. To the extent that any of the asserted claims of the '680 patent are somehow construed to avoid the prior art and not be invalid over the prior art, then Respondents do not practice or infringe the asserted claims.

'680 PATENT: INVALIDITY

13. The Asserted Claims of the '680 patent are invalid under the Patent Laws of the United States, 35 U.S.C. § 100 et seq., including, but not limited to, 35 U.S.C. §§ 102, 103, and 112.

14. In the Complaint, Complainants identified claim 1 of the '680 patent as "representative" of the asserted claims of this patent.

15. Representative claim 1 of the '680 patent is invalid under 35 U.S.C. § 102. By means of example only, the anticipatory prior art includes but is not limited to Korean Patent Publication No. U1999-0019474 (attached hereto as an Exhibit 5) and the prior art that Complainants placed into the public domain, through sales, offers for sales, and public uses of its products, including by means of example only, Maytag refrigerators having model numbers beginning with MSD2758 and MTB2156.

16. Representative claim 1 of the '680 patent is invalid under 35 U.S.C. § 103. An illustrative example of the prior art rendering obvious this claim includes, but is not limited to, the prior art identified above, Korean Patent Publication No. U1999-0030068 (attached hereto as Exhibit 6), and the prior art cited in the '680 and the '644 patents and already of record.

17. Representative claim 1 of the '680 patent is invalid under 35 U.S.C. § 112 because the claim language "wherein the fill tube extends through the opening in the inner wall with a clearance between said inner wall and said fill tube to permit a flow of air about the fill tube through the clearance" is vague and indefinite.

'644 PATENT: NONINFRINGEMENT

18. Respondents have not infringed and do not infringe any valid and/or enforceable claims of the '644 patent, either directly or indirectly. Complainants bear the burden to prove infringement of the '644 patent and have failed to assert any valid claims of infringement upon which relief can be granted.

19. In the Complaint, Complainants identified claim 6 of the '644 patent as "representative" of the asserted claims of this patent. Based on the claim chart for representative claim 6, Complainants are claiming that Respondents infringe.

20. The Respondents' accused products do not infringe representative claim 6. By means of example only, the accused products do not include "a fill tube being formed with a plurality of axially spaced vents for a ventilating flow of air," as recited by claim 6 of the '644 patent. Accordingly, regardless of how the remaining elements and limitations of representative claim 6 are construed, Respondents do not infringe this claim.

21. To the extent that any of the asserted claims of the '644 patent are somehow construed to avoid the prior art and not be invalid over the prior art, then Respondents do not practice or infringe the asserted claims.

'644 PATENT: INVALIDITY

22. The Asserted Claims of the '644 patent are invalid under the Patent Laws of the United States, 35 U.S.C. § 100 et seq., including, but not limited to, 35 U.S.C. §§ 102, 103 and 112.

23. In the Complaint, Complainants identified claim 6 of the '644 patent as "representative" of the asserted claims of this patent.

24. Representative claim 6 of the '644 patent is invalid under 35 U.S.C. § 102. An illustrative example of the prior art anticipating this claim includes, but is not limited to, Korean Patent Publication No. U1999-0019474 (attached hereto as an Exhibit 7) and the prior art that Complainants placed into the public domain, through sales, offers for sales, and public uses of its products, including by means of example only, Maytag refrigerators having model numbers beginning with MSD2758.

25. Representative claim 6 of the '644 patent is invalid under 35 U.S.C. § 103. An illustrative example of the prior art rendering obvious these claims includes, but is not limited to, the prior art examples referenced above as anticipatory prior art alone or in combination with one or more of the prior art referenced in paragraphs 15 and 16, and the prior art cited in the '680 and '644 patents and already of record.

26. Representative claim 6 of the '644 patent is invalid under 35 U.S.C. § 112 because the claim language "said fill tube being formed with a plurality of axially spaced vents for ventilating flow of air" is vague and indefinite.

'730 PATENT: NONINFRINGEMENT

27. Respondents have not infringed and do not infringe any valid and/or enforceable claims of the '730 patent, either directly or indirectly. Complainants bear the burden to prove infringement of the '730 patent and have failed to assert any valid claims of infringement upon which relief can be granted.

28. In the Complaint, Complainants identified claim 2 of the '730 patent as "representative" of the asserted claims of this patent. Based on the claim chart for representative claim 2, Complainants are claiming that Respondents infringe.

29. The Respondents' accused products do not infringe representative claim 2. By means of example only, the accused products do not include side adapters "tapering from a rear portion to a front portion," or "with the upper ledges and channels being arranged substantially parallel to each other," as recited by claim 2 of the '730 patent. Accordingly, regardless of how the remaining elements and limitations of representative claim 2 are construed, Respondents do not infringe this claim.

30. To the extent that any of the asserted claims of the '730 patent are somehow construed to avoid the prior art and not be invalid over the prior art, then Respondents do not practice or infringe the asserted claims.

'730 PATENT: INVALIDITY

31. The Asserted Claims of the '730 patent are invalid under the Patent Laws of the United States, 35 U.S.C. § 100 et seq., including, but not limited to, 35 U.S.C. §§ 102, 103, and 112.

32. In the Complaint, Complainants identified claim 2 of the '730 patent as "representative" of the asserted claims of this patent.

33. The claims of the '730 patent are invalid under 35 U.S.C. § 102. By means of example only, the anticipatory prior art includes but is not limited to the prior art that Complainants placed into the public domain, through publications, sales, offers for sales, and uses of its products. Such products include by means of example only, Amana refrigerators identified at the EASY REACH PLUS refrigerators, including but not limited to Model Nos. beginning with ARB2117 and BRD18V1.

34. Representative claim 2 of the '730 patent is invalid under 35 U.S.C. § 103. An illustrative example of the prior art rendering obvious these claims includes, but is not limited to, the prior art examples listed as anticipatory prior art alone or in combination with one or more of Japanese Patent Publication No. H06-257935, Japanese Patent Publication No. 2001-091153, and/or Japanese Utility Model Publication No. H08-001438, EP 0 656 182, DE 3 505 757, DE 298 17 743, US 6,478,393, US 3,006,710 (attached hereto as Exhibits 8, 9, 10, 11, 12, 13, & 14), and the prior art cited in the '730 and the '980 patent and already of record.

35. Representative claim 2 of the '730 patent is invalid under 35 U.S.C. § 112 because the claim language reciting side adapters "tapering from a rear portion to a front portion," or "with the upper ledges and channels being arranged substantially parallel to each other," is vague and indefinite.

'980 PATENT: NONINFRINGEMENT

36. Respondents have not infringed and do not infringe any valid and/or enforceable claims of the '980 patent, either directly or indirectly. Complainants bear the burden to prove infringement of the '980 patent and have failed to assert any valid claims of infringement upon which relief can be granted.

37. In the Complaint, Complainants identified claim 1 of the '980 patent as "representative" of the asserted claims of this patent. Based on the claim chart for representative claim 1, Complainants are claiming that Respondents infringe.

38. The Respondents' accused products do not infringe representative claim 1. By means of example only, the accused products do not include a liner with side walls "having a respective laterally outwardly projecting offset sections" or " a basket slidably supported by first and second side adapters," as recited by claim 1 of the '980 patent. Accordingly, regardless of how the remaining elements and limitations of representative claim 1 are construed, Respondents do not infringe this claim.

39. To the extent that any of the asserted claims of the '980 patent are somehow construed to avoid the prior art and not be invalid over the prior art, then Respondents do not practice or infringe the asserted claims.

'980 PATENT: INVALIDITY

40. The Asserted Claims of the '980 patent are invalid under the Patent Laws of the United States, 35 U.S.C. § 100 et seq., including, but not limited to, 35 U.S.C. §§ 102, 103, and 112.

41. In the Complaint, Complainants identified claim 1 of the '980 patent as "representative" of the asserted claims of this patent.

42. The claims of the '980 patent are invalid under 35 U.S.C. § 102. By means of example only, the anticipatory prior art includes but is not limited to the prior art that Complainants placed into the public domain, through publications, sales, offers for sales, and uses of its products. Such products include by means of example only, Amana refrigerators identified at the EASY REACH PLUS refrigerators, including but not limited to Model Nos. beginning with ARB2117 and BRD18V1.

43. Representative claim 1 of the '980 patent is invalid under 35 U.S.C. § 103. An illustrative example of the prior art rendering obvious these claims includes, but is not limited to, the prior art examples referenced above as anticipatory prior art alone or in combination with one or more of the prior art referenced in paragraphs 33 and 34, and the prior art cited in the '980 and '730 patents and already of record.

44. Representative claim 1 of the '980 patent is invalid under 35 U.S.C. § 112 because the claim language reciting a liner with side walls "having a respective laterally outwardly projecting offset sections" or " a basket slidably supported by first and second side adapters," is vague and indefinite.

PATENT MISUSE, INEQUITABLE CONDUCT, AND UNCLEAN HANDS

45. Complainants are barred from relief in this case because of their patent misuse, inequitable conduct, and unclean hands and improper assertion of patent infringement claims against Respondents. Complainants are asserting patents that are invalidated by prior art that

Complainants themselves, or their predecessors, placed into the public domain. Complainants failed to comply with the duty of disclosure owed to the U.S. Patent and Trademark Office and the public. On information and belief, Complainants have failed to comply with the pre-filing investigations required under the Commissions rules and the controlling law. Complainants have unclean hands and have committed patent misuse by virtue of, without limitation, their filing the Complaint and asserting infringement without a proper investigation, their pursuing patent infringement claims that have no factual basis, their filing and pursuing infringement claims on patents known to be invalid, and not infringed, and their misuse of the patents-in-suit as averred above.

WAIVER

46. Complainants have, through their acts, conduct, and failure to act, waived any right to relief.

PUBLIC INTEREST

47. The relief sought by Complainants would be contrary to the public interest.

OTHER DEFENSES

48. Respondents reserve the right to assert additional defenses, including detailed allegations of inequitable conduct, based on further discovery and investigation in this matter.

Respectfully submitted,

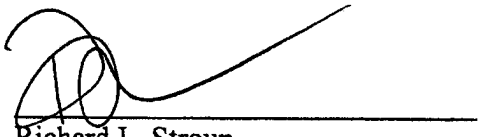

Richard L. Stroup
Thomas L. Jarvis
Andrew C. Sonu
Parmanand K. Sharma
Paul C. Goulet
Walter D. Davis Jr.
Finnegan, Henderson, Farabow,
Garrett, & Dunner L.L.P.
901 New York Avenue, NW
Washington, DC 20001-4413
(202) 408-4000
(202) 408-4400 fax

Dated: April 15, 2008

CERTAIN REFRIGERATORS AND COMPONENTS THEREOF **Inv. No. 337-TA-632**

CERTIFICATE OF SERVICE

I, Bilal Iddinn, hereby certify that on April 15, 2008, copies of the foregoing document were filed an served upon the following parties as indicated:

Ms. Marilyn R. Abbott, Secretary
U.S. INTERNATIONAL TRADE COMMISSION
500 E Street, SW Room 116
Washington, DC 20436
(Original and 6 Copies)

- ☐ Via First Class Mail
- ☒ Via Hand Delivery
- ☐ Via Overnight Courier
- ☐ Via Facsimile
- ☐ Via Electronic Filing

Honorable Theodore Essex
Administrative Law Judge
U.S. INTERNATIONAL TRADE COMMISSION
500 E. Street, S.W.
Washington, D.C. 20436
(2 Copies)
Email Service: tamara.lee@usitc.gov

- ☐ Via First Class Mail
- ☒ Via Hand Delivery
- ☐ Via Overnight Courier
- ☐ Via Facsimile
- ☒ Via Electronic Mail

Rett Snotherly, Esq.
Office of Unfair Import Investigations
U.S. INTERNATIONAL TRADE COMMISSION
500 E. Street, S.W., Room 401
Washington, D.C. 20436

- ☐ Via First Class Mail
- ☒ Via Hand Delivery
- ☐ Via Overnight Courier
- ☐ Via Facsimile
- ☒ Via Electronic Mail

COUNSEL FOR COMPLAINANTS

Kristiana Brugger, Esq.
BAKER BOTTS LLP
1299 Pennsylvania Avenue, N.W.
Washington, D.C. 20004-2400
(202) 639-7700 (Telephone)
(202) 639-7690 (Facsimile)
kristiana.brugger@bakerbotts.com

- ☐ Via First Class Mail
- ☒ Via Hand Delivery
- ☐ Via Overnight Courier
- ☐ Via Facsimile
- ☒ Via Electronic Mail

CERTAIN REFRIGERATORS AND COMPONENTS THEREOF **Inv. No. 337-TA-632**

COUNSEL FOR COMPLAINANTS

Scott F. Partridge, Esq.
Paul R. Morico, Esq.
Amanda Woodall, Esq.
Elizabeth Durham, Esq.
Robinson.Vu Esq.
Ryan Pinckney Esq.
Susan.Bigler
BAKER BOTTS LLP
One Shell Plaza
910 Louisiana Street
Houston, TX 77002
(713) 229-1569 (Telephone)
(713) 229-7769 (Fax)
scott.partridge@bakerbotts.com
paul.morico@bakerbotts.com
amanda.woodall@bakerbotts.com
elizabeth.durham@bakerbotts.com
robinson.vu@bakerbotts.com
ryan.pinckney@bakerbotts.com
susan.bigler@bakerbotts.com

☐ Via First Class Mail
☐ Via Hand Delivery
☒ Via Overnight Courier
☐ Via Facsimile
☒ Via Electronic Mail

Bilal Iddinn
FINNEGAN, HENDERSON, FARABOW, GARRETT & DUNNER, L.L.P.
901 New York Avenue, NW
Washington, DC 20001
(202) 408-4000 (Telephone)
(202) 408-4400 (Facsimile)

EXHIBIT B

Part 2

EXHIBIT 1

公開実用 昭和51—21165

(1,500円)

実用新案登録願 1

昭和49年 8月 5日

特許庁長官 殿

考案の名称 氷併出装置付冷蔵冷凍庫 (字訂正 字加入)

考案者

住所 東京都国分寺市東恋ケ窪1丁目280番地
株式会社日立製作所デザイン研究所内

氏名 安川昌平

(ほか 1 名)

実用新案登録出願人

住所 東京都千代田区丸の内一丁目5番1号

名称 (510) 株式会社 日立製作所 方式審査

代表者 吉山博吉

代理人

住所 東京都千代田区丸の内一丁目5番1号
株式会社 日立製作所内
電話東京 270—2111(大代表)

氏名 (7237) 弁理士 薄田利幸

特許庁 49.8.5 出願第二課 出本

49 092857

LG0000886

明　　細　　書

考案の名称　氷排出装置付冷蔵冷凍庫

実用新案登録請求の範囲

角氷を貯える貯氷部と、モータで回転駆動されるスクリューを配設した移送部と、移送部と連通穴で連通している砕氷室と、これと連続している排出部とからなる氷排出装置本体を冷蔵室の扉の内側に取付け、前記砕氷室にはモータで回転駆動される回転刃と固定刃を内蔵すると共に、前記連通穴に臨む周壁の一部に開閉自在の切換板を設け、切換板とスイッチの開閉を扉の外部から操作するようにしたことを特徴とする氷排出装置付冷蔵冷凍庫。

考案の詳細な説明

本考案は冷蔵室内に貯氷された角氷を扉を開けることなく、簡単な操作で必要に応じて角氷または砕氷として自動的に庫外へ排出できるようにした冷蔵冷凍庫に関するものである。

従来の冷蔵冷凍庫では、冷蔵室内で製氷された角氷を貯氷箱に貯氷しておき、必要に応じて扉を

LG0000887

開けて貯氷箱から角氷を取出して使用しているが、その取扱いが面倒であるばかりでなく、扉の開閉による冷気の損失や、氷に直接手で触れることもあるので衛生的にも好ましくない欠点があつた。

また、最近では氷も用途に応じて、例えば洋酒などには角氷を、清涼飲料水などには砕氷が望まれている。

本考案は前述の欠点を除去すると共に、必要に応じて角氷，砕氷の何れでも排出可能にし前述の要求を満足する冷蔵冷凍庫を提供するものである。

以下本考案の一実施例を図面により説明する。1は冷蔵冷凍庫で、冷蔵室の扉2の内側には氷排出装置の本体3が取付けられている。本体3は上部が開口された角氷4の貯氷部5と、その底部に配設された移送部6と、連通穴7で移送部6と連通している砕氷室8および扉2に設けられた排出口9と連なつて傾斜面10をもつ排出部11とからなつている。

移送部6から砕氷室8にかけて減速装置12を介してモータ13により回転駆動される軸14が

LG0000888

貫通している。そして移送部６内の軸１４にはスクリュー１５が取付けられ、砕氷室８内には複数枚の回転刃１６がスペーサー１７によりある間隔をもつて軸１４と一体回転するように取付けられている。更に砕氷室８内には複数枚の固定刃１８がある間隔をへだてて一端が砕氷室８の周壁１９に固定され、他端はスペーサー１７に遊嵌されている。そして回転刃１６は固定刃１８の間を通過して回転可能になつている。また、回転刃１６および固定刃１８にはそれぞれ先端が尖鋭な鋸状の尖刃１６ａおよび尖刃１８ａが複数個形成されている。

砕氷室８の周壁１９は円筒状をなし、その一部が開口２０とされ、排出部１１と連通している。また、周壁１９の連通穴７に臨む部分には切換板２１が小軸２２により開閉自在に取付けられている。

第４図，第５図からわかるように切換板２１にはピン２３が形成され、扉２に取付けられた角氷押ボタン２４と共に可動する切換ロッド２５と係

LG0000889

LG0000889

合している。また蓋2には砕氷押ボタン26が取付けられ、砕氷押ボタン26にはロッド27が固着されている。切換ロッド25およびロッド27にはそれぞれ砕氷室8の外側に取付けられたスイッチ28に対向して突片25a，27aが形成されている。ばね29，30はそれぞれ角氷押ボタン24と砕氷押ボタン26の復帰用ばねである。角氷押ボタン24を押していない時には切換板21は第2図実線で示す位置にあり、周壁19と連続して円筒形状をなす。角氷押ボタン24を押すと二点鎖線で示す21の位置に開き、排出部11の傾斜面10と連続し、移送部6が連通穴7を経て排出部11に直接連通する。また、角氷押ボタン26を押すとそれぞれの突片25a，27aがスイッチ28を動作させて回路が閉じるようになっている。

排出口9の前面にはヒンジ31を中心に開閉するシャッター32が取付けられている。シャッター32は例えば軸14もしくは角氷押ボタン24，砕氷押ボタン26などとの適宜な連動機構（図示

LG0000890

せず）により二点鎖線３２′との間を自動的に開閉する。

８８は排出口９とシャッター２１のカバー、８４はコップである。

以上の構成よりなるから、次にその動作を説明する。

冷蔵室内の製氷皿で作られた角氷４を貯氷部５内にあけて貯えておく。

先づ、砕氷を必要とするときは、コップ３４を排出口９の下に置き、砕氷押ボタン２６を押すとロッド２７の突片２７ａがスイッチ２８を押し、モータ１８の回路が閉じて駆動される。この時は切換板２１は押されず第２図実線の位置にあり砕氷室８の周壁１９の一部をなす。

貯氷部５内の角氷４はスクリュー１５の回転により、移送部６内を順次軸方向に送られ、連通穴７から切換板２１上に押出される。一方、回転刃１６は軸１４と共に矢印Ａ方向に回転しているから切換板２１上の角氷４を周壁１９に沿つて固定刃１８まですくい上げ、尖刃１６ａと尖刃１８ａ

LG0000891

とによりモータ15の回転力で角氷4は粉砕されて砕氷になる。

砕氷は自重により固定刃18の間を通り砕氷室8の開口20から排出部11の傾斜面10上に落下して滑べり落ち、シャッター82が開いている間にコップ84内に排出されるのである。即ち、スクリュー15の1回転により1ケの角氷4が砕氷とされ、連続的に排出される。所望量の排出が終ったら砕氷押ボタン26から手を離せば、ばね80によりロッド27，砕氷押ボタン26が復帰し、スイッチ28が開き、モータ18が停止して動作が完了する。

次に角氷4を排出させたい時には、コップ84を排出口9の下に置き、角氷押ボタン24を押す。そうすると切換板21は切換ロッド25とピン23で係合しているから小軸22を中心に回動し、第2図二点鎖線21'の位置に開く。それと同時に切換ロッド25の突片25aがスイッチ28を閉じ、前述の砕氷の時と同様に角氷4はスクリュー15により移送され、連通穴7より開いた切換板

LG0000892

２１上に落ちる。切換板２１は排出部１１の傾斜面１０と連続しているので、角氷４はそのまま自重で傾斜面１０上を滑り落ち、シャッター３２が開いている間にコップ３４内に排出される。即ち、スクリュー１５の１回転により１ケの角氷４が連続して自動的に排出されるのである。この時回転刃１６は空転しているのであるが、角氷４が連通穴７より押出された時に、丁度この位置に回転刃１６がきていたとすれば、前述の砕氷排出時と同様に角氷４は回転刃１６ですくい上げられ砕氷される問題がある。これは次の方法で解決される。

即ち、角氷４が連通穴７より押出されるのはスクリュー１５の先端１５ａが連通穴７の位置にきた時であり、この時回転刃１６が連通穴７に達しない離れた位置にあるようにしておけばよく、これは軸１４に対するスクリュー１５の先端１５ａと回転刃１６との関係位置を適宜選定して取付けることにより可能である。

さて、所望量の角氷４の排出が終つたら、角氷押ボタン２４から手を離せば、ばね２９により切

LG0000893

換ロッド２５と共に復帰し、切換板２１は第２図実線の位置に戻り、スイッチ２８が開き、モータ１８が停止し、動作を完了する。

本考案は切換板２１の開閉により角氷と砕氷を適宜排出できるようにしたものであるが、本実施例では切換板２１の開閉を押ボタンによりスイッチと連動して行つたものについて説明した。これはレバーや電磁石など他の方法でも可能である。

以上説明したように、本考案によれば冷蔵室内に貯氷された角氷４を扉２を開けることなく、外部から切換板２１の開閉とスイッチ２８の操作をすることにより用途に応じて角氷もしくは砕氷をコップ２１へ直接所望量だけ排出することができるから、取扱いが非常に便利であり、冷気の損失がなく、氷に直接手を触れないから衛生的である。

また、装置全体がすべて扉２の内側に取付けられているので冷蔵室の容積が比較的有効に使用でき、製氷皿から貯氷部５へ角氷４をあける操作も楽であるなどその実用的効果は大きい。

図面の簡単な説明

LG0000894

図面は本考案の一実施例を示し、第1図は冷凍冷蔵庫の正面図、第2図は第1図のII－II断面図、第3図は第2図のIII－III断面図、第4図は第3図のIV－IV断面図、第5図は第4図のV－V断面図である。

1…冷凍冷蔵庫　2…扉　3…氷排出装置本体
4…角氷　5…貯氷部　6…移送部　7…連通穴
8…砕氷室　11…排出部　13…モータ
15…スクリュー　16…回転刃　18…固定刃
19…周壁　21…切換板　28…スイッチ

代理人弁理士　海　田　利　華

2

LG0000895

公開実用 昭和51—21165

第 1 図

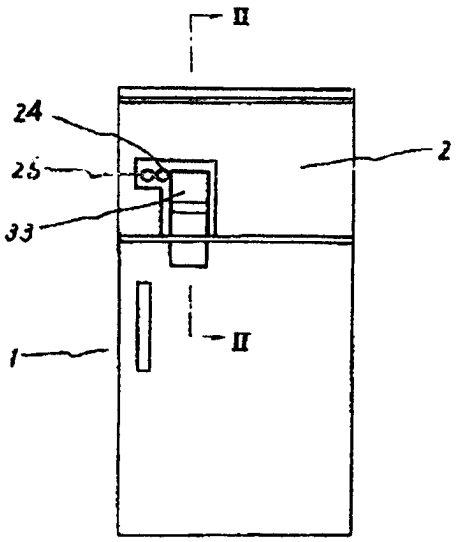

21165

1/3

代理人弁理士 薄田利幸

LG0000896

第 2 図

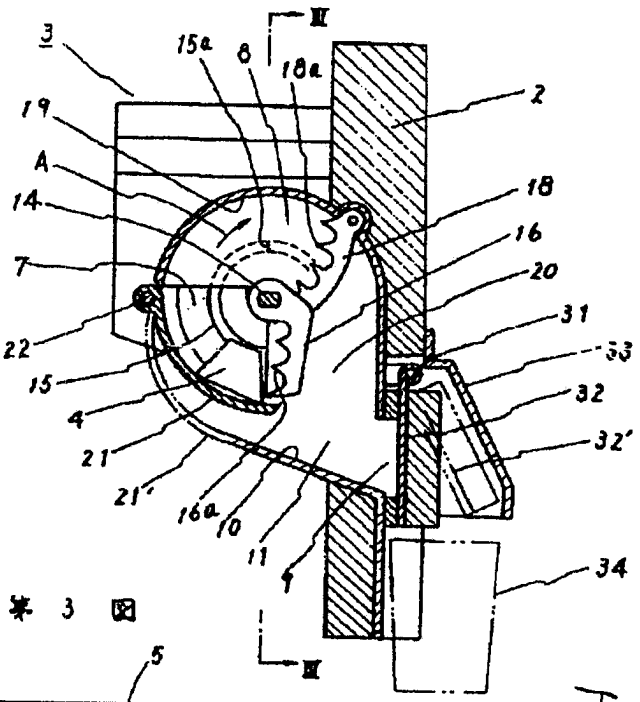

第 3 図

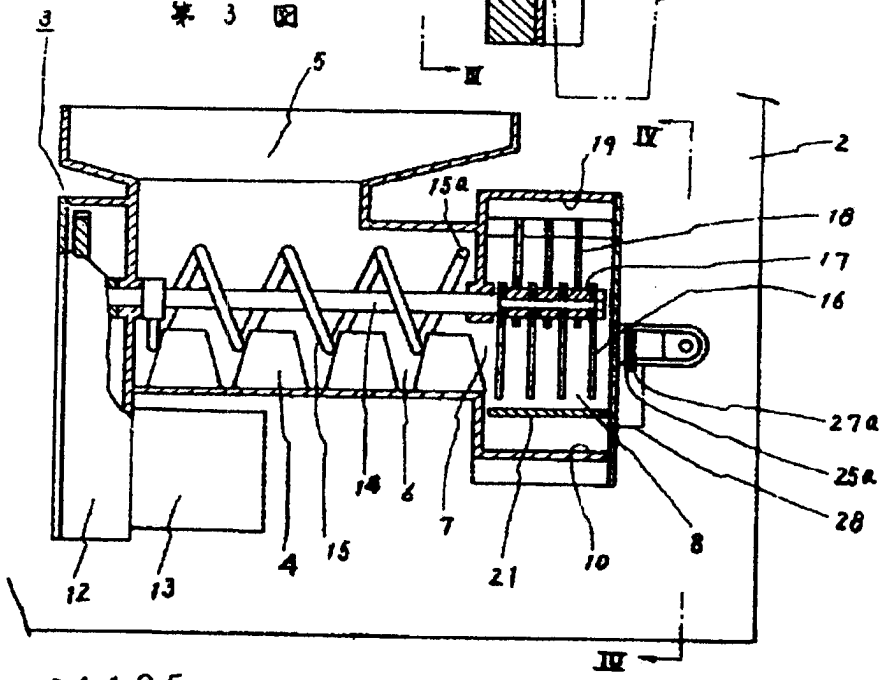

21165

2/3

代理人弁理士 薄田利幸

LG0000897

第 4 図

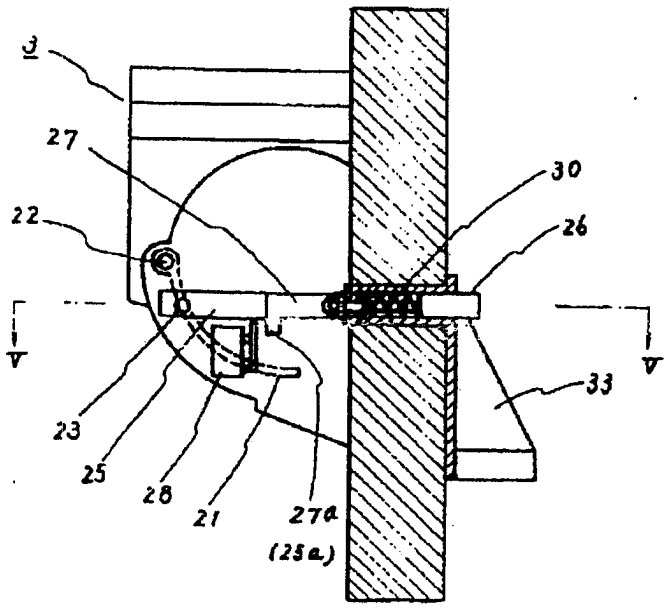

第 5 図

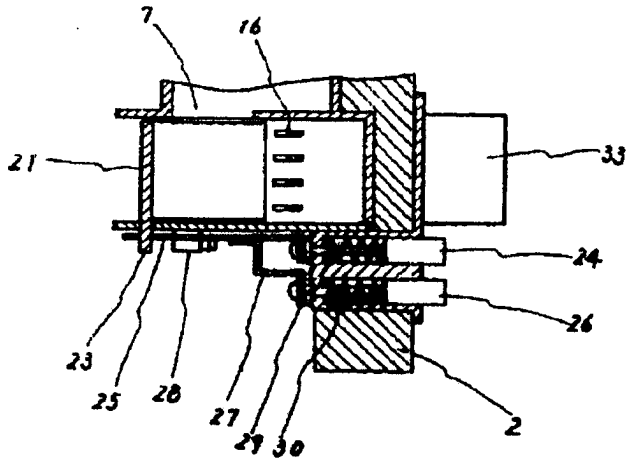

3/3

代理人弁理士 薄田利幸

LG0000898

添附書類の目録

(1) 明 細 書 1通
(2) 図 面 1通
(3) 委 任 状 1通
(4) 実用新案登録願副本 1通

前記以外の考案者、~~実用新案登録出願人または代理人~~

15字削除

考 案 者

住 所 東京都国分寺市東恋ヶ窪1丁目280番地
(コクブンジ シヒガレコイクボ)
株式会社 日立製作所デザイン研究所内
(ヒタチセイサクショ デザインケンキュウショナイ)

氏 名 清水正次郎
(シミズマサジロウ)

LG0000899

EXHIBIT 2

EXHIBIT 3

公開実用 昭和51－21173

日本政府 8百円 日本政府収入印紙



(1,500円)

実用新案登録願 22 後記号なし

昭和49年8月5日

特許庁長官 殿

考案の名称 レイトウレイゾウコ 冷凍冷蔵庫

考案者

住所 コクブンジシヒガシコイクボ 東京都国分寺市東恋ケ窪1丁目280番地

株式会社 ヒタチセイサクショ 日立製作所 デザイン研究所内

氏名 ヤスカワショウヘイ 安川昌平

(ほか 1 名)

方式審査

実用新案登録出願人

住所 東京都千代田区丸の内一丁目5番1号

名称 (510) 株式会社 日立製作所

代表者 吉山博吉

代理人

居所 東京都千代田区丸の内一丁目5番1号

株式会社 日立製作所内

電話東京 270－2111(大代表)

氏名 (7237) 弁理士 田利 幸

特許庁 49.8.5 出願第二課

49 092878

LG0000900

LG0000900

明　　細　　書

考案の名称　　冷蔵冷蔵庫

実用新案登録請求の範囲

冷蔵室扉の内側に取付けられた貯氷部と移送部と排出部とからなる氷排出装置の貯氷部開口に開閉自在の蓋を取付けたことを特徴とする冷蔵冷蔵庫。

考案の詳細な説明

本考案は冷蔵室内に貯氷された角氷を扉を開けることなくスイッチ操作だけで自動的に外部に排出する角氷排出装置の貯氷部の改良に関するものである。

この種の角氷排出装置付の冷蔵冷蔵庫では角氷排出装置を冷蔵室の扉の内側に取付け、冷蔵室内で製氷皿により製氷された角氷を製氷皿から角氷排出装置の貯氷部内へ直接離氷して貯氷することが行われている。したがつて離氷操作を良くするには貯氷部の開口面積を大きくする必要があり、そのため角氷排出装置が大型になり、それだけ冷蔵室容積が小さくなる問題がある。

LG0000901

LG0000901

更に貯氷部が開口していると、例えば冷凍室内への食品などと出入に扉が開放されたときに貯氷部内へ埃や異物が入ることもあり衛生上好ましくなく、また室内の暖気により貯氷された角氷の表面が融解され扉が閉じられると、これが再凍結して角氷が相互に付着し角氷の排出に支障をきたす問題がある。

本考案は貯氷部の開口に開閉自在の蓋を設けるだけの簡単な構成により前述した問題点をすべて解決したものである。

以下、本考案の一実施例を図面により説明する。1は冷凍冷蔵庫で冷凍室の扉2の内側には角氷排出装置の本体3が取付けられている。

本体3は上部が開口された貯氷部4とその底部の移送部5と連通穴6で移送部5と連通している排出部7とからなつており、貯氷部の開口には開閉自在の蓋8が取付けられている。

移送部5内にはモータ9により回転駆動される軸10が貫通している。そして軸10にはスクリュー11が取付けられている。排出部7の底部は

LG0000902

扉２に形成されている排出口１２と連なっている。

排出口１２にはシャッター１８がクランク機構１４を介して軸１０と連動開閉する。１５はスイッチでボタン１６により扉２の外部から開閉操作される。１７は排出口カバー、１８は角氷、１９はコップ、２０は製氷皿である。

以上の構成よりなり、次に動作を説明する。

冷蔵室内の製氷皿２０で作られた角氷１８は第８図に示すように蓋８を開き、製氷皿２０を手でひねりながら離氷させて貯氷部４内に直接あける。この時、蓋は受皿を兼ねるものであり、ここに入った角氷１８は蓋８を閉めることにより自動的に貯氷部４内に入る。

このようにして貯氷部４内に角氷１８を貯えておき、角氷１８が必要な時には例えばコップ１９を排出口１２の下に置き、ボタン１６を押すとスイッチ１５が閉じ、通電回路が形成されモータ９が駆動され貯氷部４内の角氷１８はスクリュー１１の回転により移送部５内を順次軸方向に送られ排出部７内へ落下する。一方シャッター１８はク

LG0000903

LG0000903

ランク機構14により開閉しているからシャッター13が開いた時に排出部7より自重で滑り落ち、排出口12よりコップ19内に排出される。所望量に達したらコップ19をボタン16より離せばスイッチ15が開き、通電回路が切れモータ9が停止する。

この時にシャッター18が閉じた位置にて停止するようカムスイッチ（図示せず）が設けてある。

以上説明したように本考案によれば、貯氷部4の開口に開閉自在の蓋8を設けたことにより、蓋8を開いた時にはこれが受皿を兼ねるので貯氷部4の開口面積が小さくても製氷皿20から貯氷部4へ角氷18をあける操作が容易であり、角氷排出装置3全体が小型になり、冷蔵室の容積が有効に使用できる。また、常時は貯氷部4が蓋8で閉じられているので冷蔵室への食品の出し入れなどで扉2が開放された時に室内の空気により貯氷部4内の角氷18が融解することも少なく、埃や異物が入ることも防止されるなど簡単な構成で幾多の効果を有している。

LG0000904

図面の簡単な説明

図面は本考案の一実施例を示し、第1図は冷凍冷蔵庫の正面図、第2図は第1図のII－II断面図、第3図は動作を示す一部側面図、第4図は第2図のIV－IV断面図である。

1…冷凍冷蔵庫　2…扉　4…貯氷部　5…移送部　7…排出部　8…蓋　9…モータ　11…スクリュー　12…排出口　13…シャッター　15…スイッチ　20…製氷皿

代理人弁理士　薄　田　利　幸

LG0000905

公開実用 昭和51－21173

第 1 図

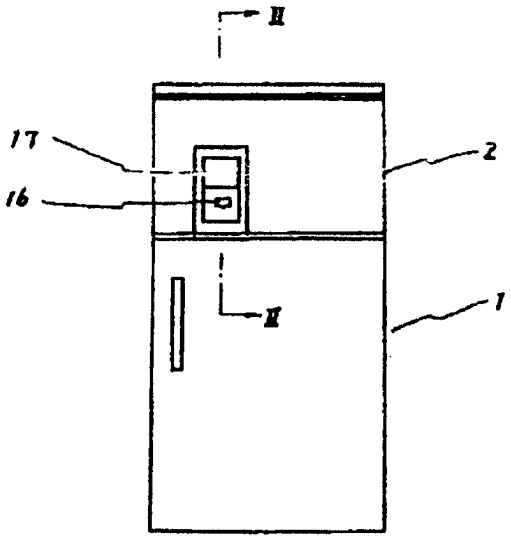

21173

1/2

代理人弁理士 薄田利幸

LG0000906

第 2 図

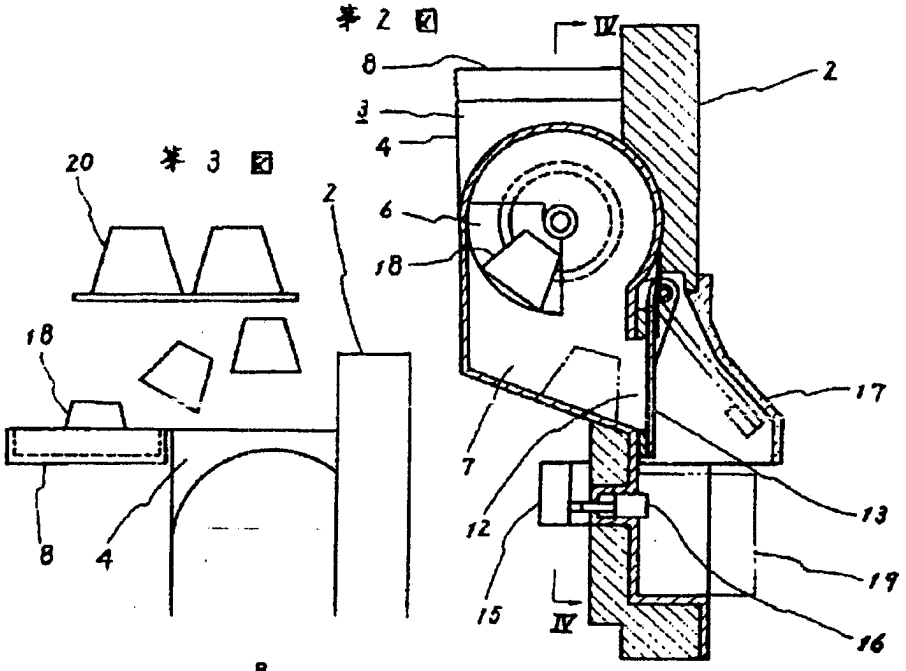

第 3 図

第 4 図

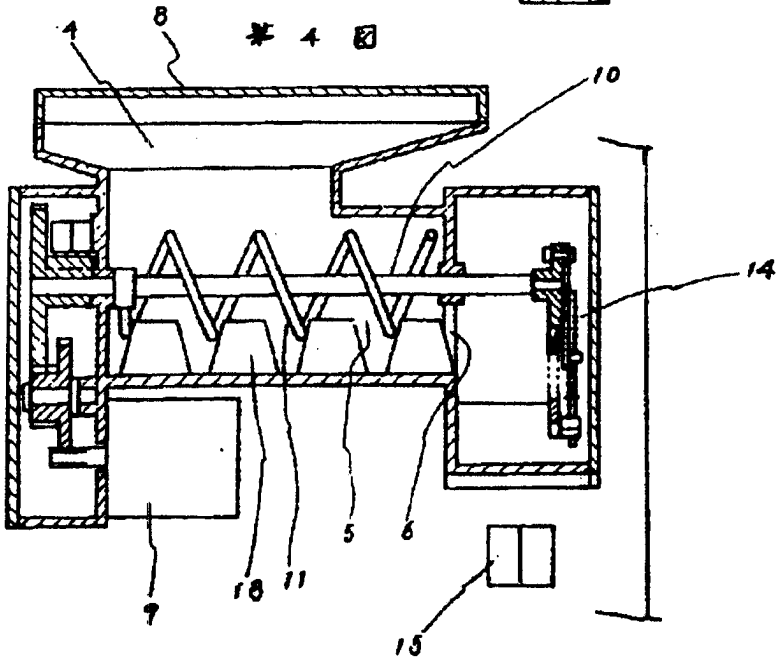

21173

代理人弁理士 薄田利章

LG0000907

公開実用 昭和51—21173

73

添附書類の目録

(1) 明	細 書	1通
(2) 図	面	1通
(3) 委 任	状	1通
(4) 実用新案登録願副本		1通

前記以外の考案者、~~実用新案登録出願人または代理人~~

15字削除

考 案 者

住 所 東京都国分寺市東恋ケ窪1丁目280番地
(コクブンジ シヒガシコイクボ)
株式会社 日立製作所 デザイン研究所内
(ヒタチセイサクショ デザインケンキュウショナイ)

氏 名 清水正次郎
(シミズマサ ジロウ)

LG0000908

特許願（C）

昭和 47年 9月19日

特許庁長官殿

1 発明の名称
氷塊取出装置

2 発明者
住所 大阪府東大阪市高井田本通3丁目22番地
中川電機株式会社内
氏名 中本 晋文

3 特許出願人
住所 大阪府東大阪市高井田本通3丁目22番地
名称 (448) 中川電機株式会社
代表者 中川 悳春

4 代理人 〒571
住所 大阪府門真市大字門真1006番地
松下電器産業株式会社内
氏名 (5971) 弁理士 中尾敏男
(ほか1名)
〔連絡先 電話(東50453-3111特許部分室)〕

5 添付書類の目録
(1) 明細書 1通
(2) 図面 1通
(3) 委任状 1通
(4) 願書副本 1通

⑲ 日本国特許庁

公開特許公報

⑪特開昭 49-50545
㊸公開日 昭49.(1974) 5.1(
㉑特願昭 47-94321
㉒出願日 昭47.(1972) 9.19
審査請求 未請求 (全3頁)

庁内整理番号 7049 32
㊷日本分類 68 C23

明細書

1、発明の名称

氷塊取出装置

2、特許請求の範囲

冷蔵庫本体内一部に、氷塊を収容しかつ内部にこの氷塊を外部に排出させる移送装置を備えた貯氷容器と、前記本体外部からの操作によって駆動されかつ前記移送装置と連結して貯氷容器内の氷塊を外部に排出する駆動伝達装置を収容した機械収容箱とを装設し、この機械収容箱の一部に、一端が前記貯氷容器の氷塊排出窓に対向し、かつ他端が本体の一部を貫通した氷塊排出ダクトと連通せる氷塊排出受部を一体に形成したことを特徴とする氷塊取出装置。

3、発明の詳細な説明

本発明は冷蔵庫の冷凍室内等にて製氷された氷塊を外扉を開放することなく外部に取出せるようにした氷塊取出装置の改良に関するもので、前記取出装置をコンパクトにまとめ、組立の簡易化を図ったものである。

以下図面により本発明の一実施例について説明する。1は上部に冷凍室を形成し下部に冷蔵室を形成し、前記各室の前面開口部に外扉2，2'を回動自在に枢支した冷蔵庫本体である。3は前記冷凍室側外扉2の内面板一側寄りに取付けられた機械収容箱であり、前記外扉2を貫通し外部の操作ハンドル4に連動して回動する回転ギア－5と、この回転ギア－5に連結されかつ先端が機械収容箱3の側面より突出した駆動軸6等よりなる駆動伝達装置を内装したものである。7は外扉2の内面板一部に着脱自在に取付けられ、冷凍室に設置した製氷器（図示せず）にて製氷された氷塊を収容する貯氷容器であり、下底面を前記機械収容箱3の方向に順次低くなる傾斜面8とすると共に、前記機械収容箱3に隣接する一側面を前記傾斜面8と任意鈍角状をなす傾斜面9としている。なおこの貯氷容器7内には、部材を螺旋状に捲回した氷塊移送部材10と、一端が前記駆動伝達装置の駆動軸6と着脱自在に係合しかつ他端が前記貯氷箱7の傾斜傾斜面9を貫通して移送部材10の一

LG0000883

LG0000883

線と連結された支軸１１と、前記貯氷容器７の側板傾斜面９とわずかな間隔を存して支軸１１に係合し底面一部に透窓１３，１３を穿設した円板状の氷塊誘導板１２とよりなる氷塊移送装置を内装している。

前記氷塊移送装置の移送部材１０と支軸１１および氷塊誘導板１２は、第２図のように垂直線に対して所定の傾斜角度で貯氷容器７の下底面の傾斜面９に沿って任意平行状に傾斜して取付けられている。１４は前記機械収容箱３の一部に一体形成された氷塊排出受部であり、一端が貯氷容器７の氷塊排出窓１５に対向して開口し、かつ他端は外扉２の断熱壁を貫通して外扉２の外部に開口した排出ダクト１６に連通されている。

前述の構成により、外扉２の前面に突設した操作ハンドル４を回動させると、回転ギアーロッドを介して駆動軸６が回転する。この駆動軸６の回動によりこれと係合した支軸１１が従動し、貯氷容器７内の氷塊誘導板１２と移送部材１０が回動するので、貯氷容器７内の氷塊は、傾斜方向に移動されると同時に前記傾斜面９の最下段に位置する氷塊誘導板１２に集められ、一つの透窓１３と氷塊排出窓１５とが合致したときにのみ、氷塊は、透窓１３および氷塊排出窓１５から機械収容箱３の氷塊排出受部１４を通り、さらに排出ダクト１６を経てこの排出ダクト１６に設けた開閉蓋１７を押開けて外部に排出される。そして前記操作ハンドル４が一回転し終えて元のハンドル位置に戻ると、前記氷塊誘導板１２の位置が第３図のように氷塊排出窓１５および氷塊排出受部１４を閉塞して、ダクト１６と貯氷容器７との間を閉塞する。

上記実施例の説明から明らかなように本発明の氷塊取出装置によれば、貯氷容器内の氷塊移送装置と着脱自在に連結されかつ本体外部からの操作によって駆動される駆動伝達装置を収容した機械収容箱の一部に、一端が前記貯氷容器の氷塊排出窓に対向しかつ他端が本体の一部を貫通した排出ダクトと連通した氷塊排出受部を一体に形成したものであるため、貯氷容器から排出される氷塊は、前記氷塊排出受部より排出ダクトに放出されるので、氷塊を前記放出ダクトに導く氷塊排出受部を特別に別体の部品を設ける必要がなく組立部品点数の合理化が図れると共に組立作業も簡易化でき、氷塊はひかかることなく滑らかに排出される。

4、図面の簡単な説明

第１図は本発明一実施例による氷塊取出装置を備えた冷蔵庫の斜視図、第２図は第１図に示すⅡ－Ⅱ線での断面図、第３図は第２図に示すⅢ－Ⅲ線での断面図である。

３……機械収容箱、７……貯氷容器、１４……氷塊排出受部、１５……氷塊排出窓、１６……排出ダクト。

代理人の氏名　弁理士　中尾敏男　ほか１名

第１図

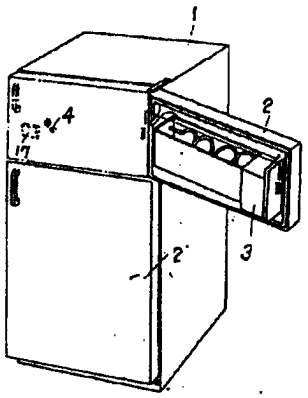

第２図

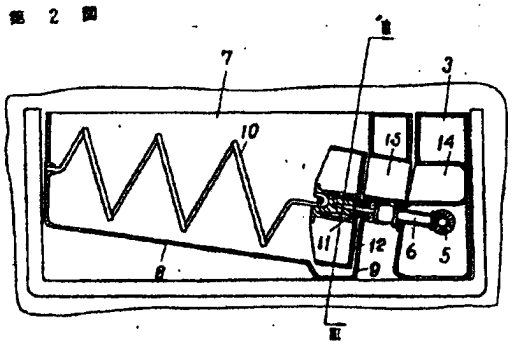

LG0000884

LG0000884

第 3 図

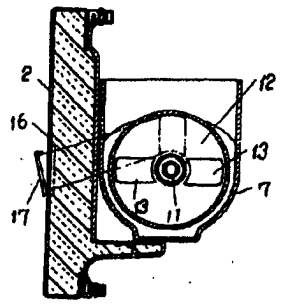

6 前記以外の代理人

住　所　大阪府門真市大字門真1006番地
松下電器産業株式会社内

氏　名　(6152) 弁理士　栗野重孝

名称変更届

昭和47年12月14日

特許庁長官　殿

1. 事件の表示

昭和47年特許願第94321号

2. 発明の名称

氷塊取出装置

3. 名称を変更した者

事件との関係　特許出願人

住　所　大阪府東大阪市高井田本通3丁目22番地

旧名称　(448) 中川電機株式会社

新名称　(448) 松下冷機株式会社

代表者　中川　横　[illegible]

4. 代理人

住　所　大阪府門真市大字門真1006番地
松下電器産業株式会社内

氏　名　(5971) 弁理士　中尾敏男

(連絡先　電話(東京)453-3111 特許部分室　松本)

5. 添付書類の目録

登記簿抄本の写　1通

(なお、原本は同日付け差出しの昭和47年特許願第34069号の名称変更届に添付した登記簿抄本を援用します。)

特許庁

LG0000885

LG0000885

EXHIBIT 4

公開実用 昭和51—148756



(1,500円)

実用新案登録願 22

昭和50年 5月23日

特許庁長官 殿

考案の名称 氷排出装置の切換機構

考案者

住所 東京都国分寺市東恋ケ窪1丁目280番地
株式会社 日立製作所 デザイン研究所内

氏名 安川昌平

(ほか 1 名)

実用新案登録出願人

住所 東京都千代田区丸の内一丁目5番1号

名称 (510) 株式会社 日立製作所

代表者 吉山博吉



代理人

住所 東京都千代田区丸の内一丁目5番1号
株式会社 日立製作所内
電話東京 270—2111(大代表)

氏名 (7237) 弁理士 薄田利



50-068783



LG0000909

明　細　書

考案の名称　氷排出装置の切換機構

実用新案登録請求の範囲

貯氷部と移送部と砕氷室と排出部からなる氷排出装置を冷凍室の扉内側に取付けた冷凍冷蔵庫において，移送部から排出部への角氷の通路を切換える切換板を外部から操作する角氷ボタンと連動して開閉させると共に，角氷ボタンとこれと連動する係止板により，前記，切換板を開閉何れの状態でも係止するようにしたことを特徴とする氷排出装置の切換機構。

考案の詳細な説明

本考案は冷凍冷蔵庫の冷凍室内に貯氷された角氷を扉を開けることなく，簡単な操作で必要に応じて角氷または砕氷として自動的に庫外へ排出できるようにした角氷と砕氷の排出切換に関するものである。

従来の冷凍冷蔵庫では，冷凍室内で製氷された角氷を貯氷箱に貯氷しておき，必要に応じて扉を開けて貯氷箱から角氷を取出し，角氷のままか，

LG0000910

LG0000910

公開実用 昭和51—148756

あるいはこれを粉砕して砕氷として使用しているが，その取扱いが面倒であるばかりでなく，扉の開閉による冷気の損失や氷に直接手が触れることもあるので，衛生的にも好ましくない欠点があった。

本考案は必要に応じて角氷，砕氷の何れでも簡単な操作で自動的，かつ確実に排出できるようにした切換機構を提供しようとするものである。

以下，本考案の一実施例を図面により説明する。

1は冷凍冷蔵庫で冷凍室の扉2の内側には氷排出装置の本体3が取付けられている。本体3は上部が開口された角氷4の貯氷部5とその底部に配設された移送部6と連通穴7で移送部6と連通している砕氷室8，および扉2に設けられた排出口9と連なって傾斜面10を持つ排出部11とからなっている。移送部6から砕氷室8にかけて減速装置12を介してモータ13により回転駆動される軸14が貫通している。そして，移送部6内の軸14にはスクリュー15が取付けられ，砕氷室8内には複数枚の回転刃16がスペーサ17により

LG0000911

ある間隔をもって軸１４と一体回転するように取付けられている。更に，砕氷室８内には複数枚の固定刃１８がある間隔をへだてて，一端が砕氷室８の周壁１９に固定され，他端はスペーサ１７に遊嵌されている。そして回転刃１６は固定刃１８の間を通過して回転可能になっている。また，回転刃１６，および固定刃１８にはそれぞれ先端が尖鋭な鋸状の尖刃16aおよび尖刃18aが複数個形成されている。砕氷室８の周壁１９は円筒形状をなし，その一部が開口２０とされ，排出部１１と連通している。また，周壁１９の連通穴７に臨む部分には切換板２１が小軸２２により開閉自在に取付けられている。更に，扉２には第４図からわかるように扉外から操作可能なように角氷ボタン２３と砕氷ボタン２４が摺動自在に遊嵌されると共に，突出する方向に復帰バネ２５，２６により付勢されている。また，角氷ボタン２３と砕氷ボタン２４にはそれぞれ扉２の内側に切換ロッド２７，２８が固着されている。切換ロッド２７は第６図に示すように中間部には傾斜面を持つ係止

LG0000912

突起27aと折曲部27bが形成され，先端には楕円穴29が形成されている。楕円穴29は切換板21に突設されたピン30と係合されている切換ロッド28は中間部に傾斜面をもつ係止突起28aが形成されている。31は摺動板で本体3に摺動自在に取付けられ，中間部には，前記，係止突起27a，28a を係止するための係止爪31a，31bが形成されていると共に，板バネ32により圧接されている。33は係止板で本体3にピン34で枢着され，先端には切換板21のピン30を係止するための切欠き33aが形成されている。そして，ねじりバネ35により反時計方向に付勢され，切換ロッド27の折曲部27bに圧接されている。したがって，角氷ボタン23を押すことにより係止板33はねじりバネ35に抗して時計方向に回動する。また，排出口9の下部には押ボタン36が扉2の外側に突出して取付けられ，内側に取付けられたモータ13を回転停止させるスイッチ37を開閉する。排出口9の前面にはヒンジ38を中心に開閉するシャッター39が取付けられている。

LG0000913

シャッター３９は，例えば軸１４もしくは押ボタン３６などと適宜な連動機構（図示せず）により二点鎖線３９′との間を自動的に開閉する。４０は排出口９とシャッター３９のカバー，４１はコップである。以上の構成よりなり，次にその動作を説明する冷凍室内の製氷皿で作られた角氷４を貯氷部５内にあけて貯えておく，先ず，砕氷を排出させたい時には砕氷ボタン２４を押し，第４図の状態にする。この状態では，砕氷ボタン２４は切換ロッド２８の係止突起28aが摺動板３１の係止爪31bに係止されて押された位置に保持されている。一方，角氷ボタン２３は復帰バネ２５により復帰して突出し，切換板２１は切換ロッド２７により第２図実線に示すように砕氷室８の周壁１９と連続した円筒形状をなす位置にある。しかも，切換板２１の突設ピン３０が係止板３３の切欠き33aに係止されているので，この位置を確実に保持されている。次に排出口９の下に位置する押ボタン３６をコップ４１で押すとスイッチ３７が閉じ，モータ１３，軸１４が回転し，貯氷部５内の

LG0000914

LG0000914

公開実用 昭和51—148756

角氷4はスクリュー15により，移送部6を順次軸方向に送られ，連通穴7から切換板21上に押出される。一方，回転刃16は軸14と共に矢印A方向に回転しているから，切換板21上の角氷4を周壁19に沿って固定刃18まですくい上げ尖刃16aと尖刃18aとによりモータ13の回転力で角氷4は粉砕されて砕氷になる。砕氷は自重により固定刃18の間を通り，砕氷室8の開口20から排出部11の傾斜面10上に落下して滑べり落ち，シャッター39が開いている間にコップ41内に排出させるのである。即ち，スクリュー15の1回転により1ケの角氷4が砕氷されて連続的に排出される。所望量の排出が終ったらコップ41を押ボタン36から離せばスイッチ37が開き，モータ13が停止して動作を完了する。

次に角水を排出させたい時には，第4図の状態から角氷ボタン23を押すと，まず切換ロッド27の先端の楕円穴29のために最初は切換板21の突設ピン30を押すことなく遊び分だけ摺動する。その間に切換ロッド27の折り曲げ部

LG0000915

LG0000915

27bが係止板33をねじりバネ35に抗して押し上げ，ピン34を支点に回動させ，突設ピン30の係止をはずす。更に，切換ロッド27が摺動すると，今度は切換板21の突設ピン30が楕円穴29で押され，切換板21は小軸22を支点に回動し，排出部11の傾斜面10に連続する。それと同時に切換ロッド27の係止突起27aがその傾斜面で摺動板31の係止爪31aを押し上げるので砕氷ボタン24は切換ロッド28の係止がはずれるので，復帰バネ26により復帰する。押し上げ終ると摺動板31が板バネ32により復帰し，係止突起27aが係止爪31aに係止され（第5図），切換板21が排出部11の傾斜面10に連続する位置を保持する（第2図二点鎖線位置）。ついで排出口9の下にある押ボタン36をコップ41で押すと，前述の砕氷時と同様に角氷4はスクリュー15により移送され，連通穴7より開いた切換板21上に落ちる。切換板21は排出部11の傾斜面10と連続しているので，角氷4はそのまま自重で傾斜面10上を滑べり落ち，シャッター

LG0000916

３９が開いている間にコップ４１内に排出される。即ち，スクリュー１５の１回転により１ケの角氷が連続して自動的に排出されるのである。この時回転刃１６は空転しているが角氷４が連通穴７より押出された時に丁度この位置に回転刃１６が来ていたとすれば，前述の砕氷排出時と同様に角氷４は回転刃１６ですくい上げられ，固定刃１８の間で砕氷される問題があるが，これはスクリュー１５の先端15aの位置と回転刃の相互位置を適宜設定することにより解決される。

さて，所望量の角氷４の排出が終つたらコップ４１を押ボタン３６から離せばスイッチ３７が開き，モータ１３が停止して動作を完了する。

また，この第５図の状態から砕氷ボタン２４を押せば切換ロッド２８の係止突起28aの傾斜面で揺動板３１の係止爪31bを押し上げ，切換ロッド２７の係止突起27aと係止爪31aの係止を外し，角氷ボタン２３が復帰し，係止板３３もねじりバネ３５で復帰し，切欠き33aで切換板２１の突出ピン３０を係止し，第４図の状態に戻り，前述と

LG0000917

同様，砕氷が排出可能となる。

以上，説明したように本考案によれば，冷凍室内に角氷4を貯氷しておき，必要に応じて切換ボタンの砕氷ボタン24，角氷ボタン23を押せば角氷もしくは砕氷が，押ボタン36を押している間，自動的に連続的にコップ41内に排出できるから非常に便利であり，取扱い，構造も簡単である。しかも，砕氷時には角氷4が回転刃16により，切換板21上をすくい上げられる時に切換板21を押し開く力が作用するが，本考案では角氷ボタン23と連動する係止板33で切換板21を砕氷状態の位置に係止保持しているので，確実に砕氷が排出されるのである。本考案の係止板33をなくし，復帰バネ25の力で切換板22を砕氷位置に保持することも可能であるが，復帰バネ25の力が小さいと角氷4をすくい上げる力に負けて，切換板21が押し開かれ，角氷4が切換板21と回転刃16との間に喰込んでロックしたり，角氷4が傾斜面10に直接落下して角氷のまま排出されてしまう。また，復帰バネ25の力を

LG0000918

公開実用 昭和51—148756

大きくして切換板２１を砕氷位置に保持しようとすると，角氷ボタン２３の操作力が大きくなる問題が生じる。

本考案は前述したように簡単な構造で，この問題を解決したものである。

図面の簡単な説明

図面は本考案の一実施例を示し，第１図は冷凍冷蔵庫の正面図，第２図は第１図のⅡ－Ⅱ断面図，第３図は第２図のⅢ－Ⅲ断面図，第４図は第３図のⅣ－Ⅳ断面図で砕氷排出状態を示す図，第５図は角氷排出状態を示す図，第６図は切換ロッド２７の斜視図である。

１…冷凍冷蔵庫，２…扉，３…氷排出装置本体，４…角氷，５…貯氷部，６…移送部，７…連通穴，８…砕氷室，９…排出口，１１…排出部，１３…モータ，１５…スクリュー，１６…回転刃，１８…固定刃，１９…周壁，２１…切換板，２３…角氷ボタン，２４…砕氷ボタン，２７，２８…切換ロッド，３１…摺動板，３３…係止板，３６…押ボタン，３７…スイッチ

LG0000919

LG0000919

第１図

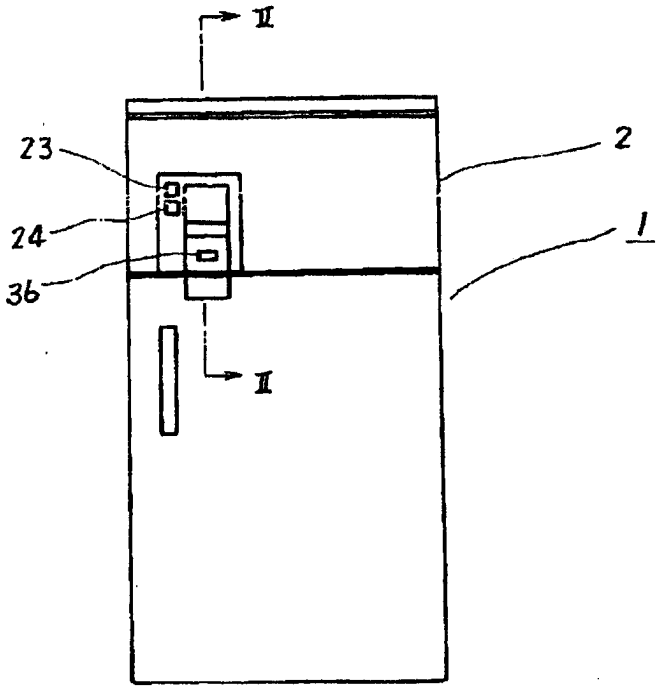

48756 代理人 弁理士 薄田利幸

LG0000920

公開実用 昭和51—148756

第2図

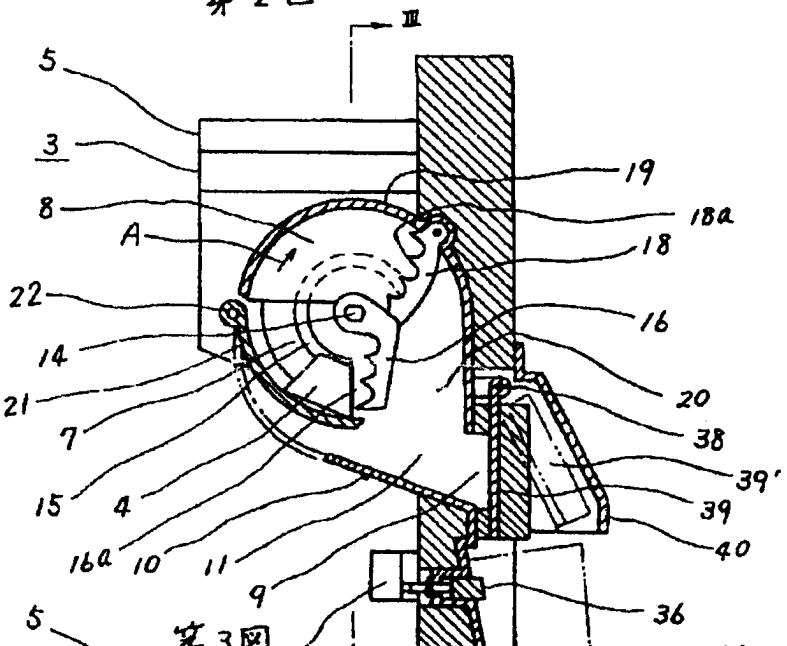

第3図

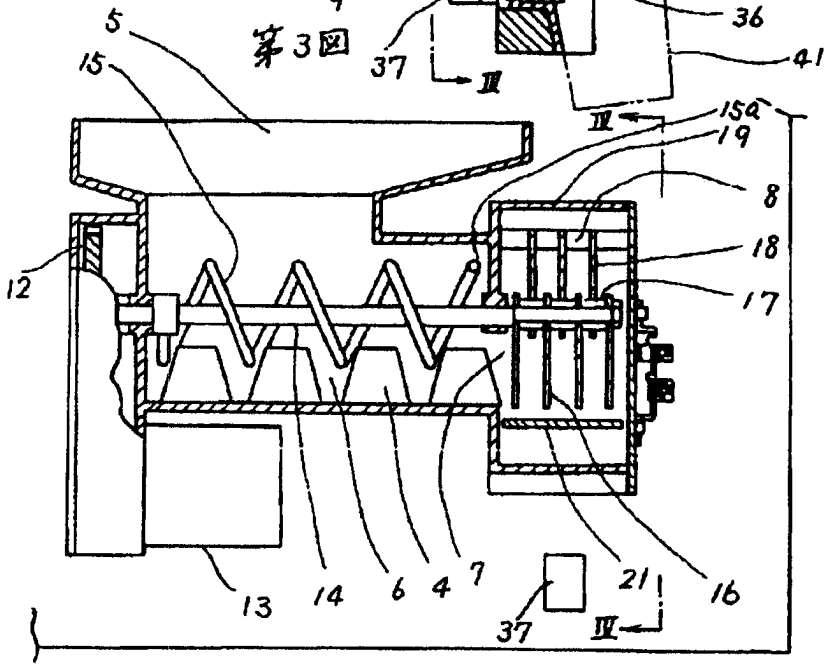

代理人 弁理士 薄田利幸

LG0000921

第４図

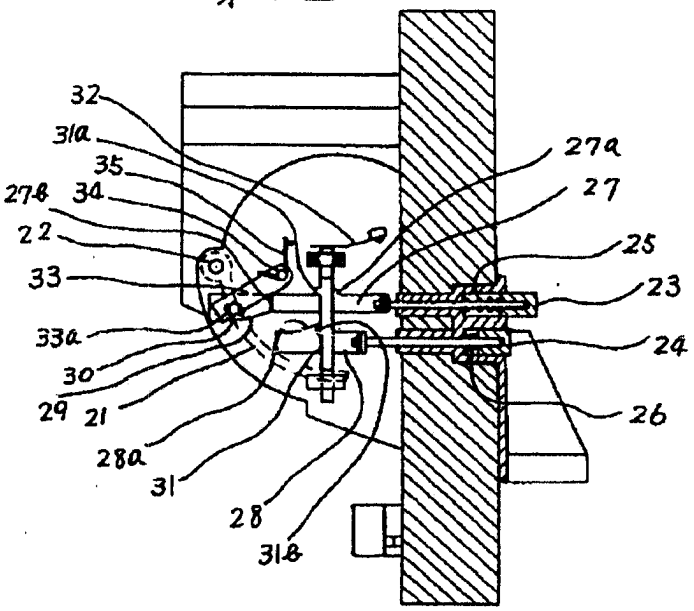

第５図

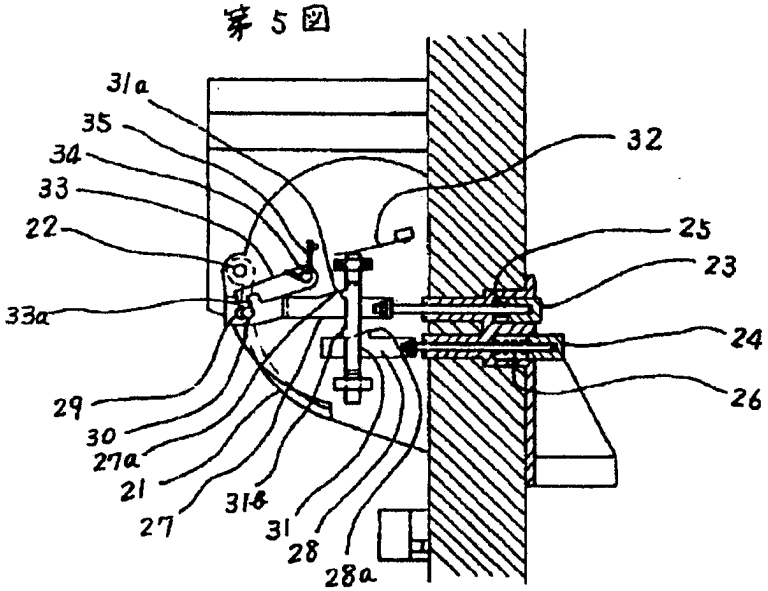

148756

代理人 弁理士 薄田利幸

LG0000922

[redacted] 公開実用 昭和51—148756 [redacted]

第 6 図

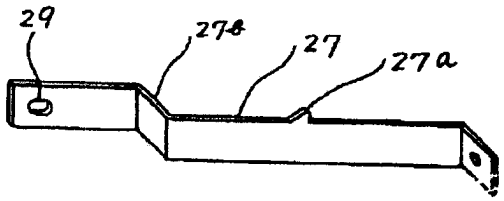

4/4

代理人弁理士 薄 田 利 幸

LG0000923

[redacted]

添附書類の目録

(1) 明　細　書　1通
(2) 図　面　1通
(3) 委　任　状　1通
(4) 実用新案登録願副本　1通

前記以外の考案者、~~実用新案登録出願人または代理人~~　15, 字削除

考　案　者

住所　東京都国分寺市東恋ケ窪1丁目280番地
(コクブンジ シヒガシコイクボ)
株式会社 日立製作所 デザイン研究所内
(ヒタチセイサクショ　デザインケンキュウショナイ)

氏名
(フリガナ)
シ　ミズ　マサジロウ
清　水　正次郎

LG0000924

LG0000924

EXHIBIT 5

(19) 대한민국특허청(KR)
(12) 공개실용신안공보(U)

(51) Int. Cl.		(11) 공개번호	실1999-0019474
F25C 1/22		(43) 공개일자	1999년06월15일
(21) 출원번호	20-1997-0032614		
(22) 출원일자	1997년11월19일		
(71) 출원인	삼성전자 주식회사, 윤종용		
	대한민국		
	442-373		
	경기도 수원시 팔달구 매탄3동 416		
(72) 고안자	이종달		
	대한민국		
	441-030		
	경기도 수원시 권선구 권선동 1265 보성아파트610동 803호		
(74) 대리인	정홍식		
(77) 심사청구	있음		
(54) 출원명	냉장고용 제빙기 급수 구조		

요약

본 고안은 냉장고용 제빙기 급수 구조에 관한 것으로서, 냉장고 본체의 외측에 제빙용 물을 이송하도록 구비된 이송관과, 상기 이송관에 연결되어 본체의 내부에 매설되는 급수관과, 상기 급수관의 선단에 제빙 용기로 물을 토출하도록 결합된 토출관을 포함하는 냉장고용 제빙기에 있어서, 상기 토출관의 상단에는 급수 차단시 급수관의 제빙수를 신속히 배출시킬 수 있도록 공기 유입공이 관통 형성되는 것을 특징으로 한다. 이와 같은 본 고안에 의하면, 토출관의 상측에 공기 유입공이 형성되기 때문에, 제빙용기에 공급되는 제빙수의 차단시 토출관에 있는 제빙수를 신속하게 배출시킬 수 있고, 이에 따라 토출관의 결빙에 의한 관로의 막힘을 방지할 수 있다.

대표도

도2

명세서

도면의 간단한 설명

도 1은 종래의 냉장고용 제빙기 급수 구조를 개략적으로 나타낸 단면도.

도 2는 본 고안에 따른 냉장고용 제빙기 급수 구조를 개략적으로 나타낸 단면도.

도 3은 도 2의 요부 사시도이다.

* 도면의 주요 부분에 대한 부호의 설명 *

10: 냉장고 본체	30: 제빙기
32: 제빙 용기	42: 이송관
44: 연결구	46: 급수관
48: 토출관	48a: 공기 유입공

고안의 상세한 설명

고안의 목적

고안이 속하는 기술 및 그 분야의 종래기술

본 고안은 냉장고용 제빙기 급수 구조에 관한 것으로, 보다 상세하게는 제빙수의 공급을 차단시킬 때 토출관 내부에 공기를 유입시킴으로써 그 내부에 있는 제빙수를 신속하게 배출하여 제빙수의 원활한 공급이 이루어질 수 있도록 하는 냉장고용 제빙기 급수 구조에 관한 것이다.

일반적으로 소형 냉장고에는 냉동실에 마련된 제빙기에 제빙수를 수동으로 급수케 하는 반면에, 대형 냉장고에서는 별도의 급수 장치를 이용하여 제빙수를 자동으로 급수케 하고 있다.

이렇게 자동으로 물을 급수하는 종래의 냉장고용 제빙기 급수 구조를 도 1에서 개략적으로 나타내고 있다.

LG0000950

도 1에서, 냉장고 본체(1)의 상부는 냉동실(2) 및 냉기 순환 통로(3)로 구획되고, 상기 냉기 순환 통로(3) 내에는 냉동 사이클의 일부를 구성하는 증발기(4)를 갖추어 여기에서 생성되는 냉기를 냉동실(2)로 공급하도록 되어 있다.

그리고, 상기 냉동실(2) 내에는 얼음을 만들 수 있는 제빙기(5)가 구비되고, 상기 제빙기(5) 내에는 제빙 용기(5a)가 수납되어 있다.

한편, 상기 본체(1)의 외측면에는 도시되지 않은 물 저장 탱크로부터 제빙용으로 물을 이송하는 이송관(6)이 구비되고, 상기 본체(1)의 내부에는 상기 이송관(6)과 연결구(7)에 의하여 결합된 급수관(8)이 제빙 용기(5a) 쪽으로 하향 경사지게 배설된다.

상기 급수관(8)의 선단에는 제빙기(5) 내부의 제빙 용기(5a)에 직접 물을 토출시키는 토출관(9)이 결합된다.

이와 같은 종래의 급수 구조는 제빙이 완료되면 관로의 결빙을 방지하기 위하여 제빙수의 공급을 차단한 후 배수를 하도록 되어 있으나, 급수관(8), 토출관(9) 및 이송관(6)과 같은 급수관의 직경이 변화 없이 균일하므로 급수시에나 배수시 제빙수의 배수를 신속히 이루어지지 않는다.

이렇게 관로 상에 급수를 차단 한 후에도 제빙수가 한번에 신속하게 전부 배출되지 못하고 계속적으로 드레인이 이루어지게 되어 관 내부에 남아 있던 제빙수가 결빙되므로 다시 제빙기를 작동할 때에는 제빙수의 급수가 원활하게 이루어지지 못하는 문제점이 있다.

고안이 이루고자 하는 기술적 과제

따라서, 본 고안이 이루고자 하는 기술적 과제, 즉, 본 고안의 목적은 종래의 냉장고용 제빙기 급수 구조의 상기와 같은 문제점을 해결하기 위한 것으로서, 제빙수의 공급을 차단시킬 때 토출관 내부에 공기를 유입시킴으로써 그 내부에 제빙수가 잔류되는 것을 방지함과 동시에 제빙수의 원활한 공급이 이루어질 수 있도록 한 냉장고용 제빙기 급수 구조를 제공하는데 있다.

고안의 구성 및 작용

이와 같은 목적을 달성하기 위한 본 고안에 따른 냉장고용 제빙기 급수 구조는, 냉장고 본체의 외측에 제빙용 물을 이송하도록 구비된 이송관과, 상기 이송관에 연결되어 본체의 내부에 배설되는 급수관과, 상기 급수관의 앞 끝부분에 제빙 용기로 물을 토출하도록 결합된 토출관을 포함하는 냉장고용 제빙기에 있어서, 상기 토출관의 상단에는 급수 차단시 급수관의 제빙수를 신속히 배출시킬 수 있도록 공기 유입공이 관통 형성되는 것을 특징으로 한다.

이와 같은 본 고안에 의하면, 토출관의 상측에 공기 유입공이 형성되기 때문에, 제빙용기에 공급되는 제빙수의 차단시 토출관에 있는 제빙수를 신속하게 배출시킬 수 있고, 이에 따라 토출관의 결빙에 의한 관로의 막힘을 방지할 수 있다.

이하, 본 고안의 바람직한 실시예를 첨부된 도면에 의하여 더욱 상세히 설명한다.

도 2는 본 고안에 따른 냉장고용 제빙기 급수 구조를 개략적으로 나타낸 단면도이고, 도 3은 도 2의 요부 단면도이다.

도시한 바와 같이, 냉장고 본체(10)의 상부는 냉동실(12)이 구비되고, 그 배면에 증발기(20)에 의하여 냉기를 고 내부로 공급시킬 수 있는 냉기 순환 통로(14)가 구비된다.

그리고, 상기 냉동실(12) 내에는 제빙기(30)가 얼음을 제조할 수 있도록 구비되고, 상기 제빙기(30) 내에는 제빙 용기(32)가 수납된다.

이러한 제빙기(30) 내부로 제빙수를 공급하기 위한 급수 수단으로서, 본체(10)의 외측면에는 도시되지 않은 물 저장 탱크로부터 제빙수를 이송하는 이송관(42)이 구비되고, 상기 본체(10)의 내부에 상기 이송관(42)과 연결구(44)에 의하여 결합하여 배설되는 급수관(46)이 구비된다. 또한 상기 급수관(46)의 선단에 제빙기(30)의 제빙 용기(32) 위로 직접 물을 토출시키도록 결합되는 토출관(48)이 구비된다.

상기 토출관(48)은, 도 3 에서 나타낸 바와 같이, 그 상단에 제빙수의 차단시 토출관의 내부에 제빙수가 잔류되지 않도록 제빙수를 신속히 배출시킬 수 있도록 복수의 공기 유입공(48a)이 관통 형성된다.

이와 같은 본 고안에 따른 급수 구조에서, 제빙이 완료되어 제빙수의 공급을 차단하게 되면, 상기 복수의 공기 유입공으로 공기가 유입됨으로써, 급수관(46)이나 토출관(48) 등의 관 내부에 있던 제빙수는 이송관(42) 쪽이나 제빙기(30) 쪽으로 급속히 배출된다.

이 때, 토출관(48)의 상단에 형성된 공기 유입공(48a)을 통하여 유입되는 소량의 공기의 작용에 의하여 관 내부에는 있던 제빙수를 신속하게 배출케 한다.

고안의 효과

상술한 본 고안에 의하면, 토출관의 상측에 공기 유입공이 형성되기 때문에, 급수의 차단시 상기 공기 유입공을 통하여 공기가 토출관에 유입됨으로써, 토출관 내부에 있는 제빙수를 신속하게 배출할 수 있고, 이에 따라 토출관의 내부가 결빙되는 것을 방지하여 토출관이 막히는 것을 방지함과 아울러 제빙수의 급수를 원활하게 할 수 있다.

본 고안은 상술한 특정의 바람직한 실시예에 한정되지 아니하며, 청구 범위에서 청구하는 본 고안의 요지를 벗어남이 없이 당해 고안이 속하는 기술 분야에서 통상의 지식을 가진 자라면 누구든지 다양한 변형 실시가 가능한 것은 물론이고, 그와 같은 변경은 청구 범위 기재의 범위내에 있게 된다.

(57) 청구의 범위

LG0000951

청구항 1.

냉장고 본체의 외측에 제빙용 물을 이송하도록 구비된 이송관과; 상기 이송관에 연결되어 본체의 내부에 매설되는 급수관과; 그리고 상기 급수관의 선단에 제빙 용기로 물을 토출하도록 결합된 토출관을 포함하는 냉장고용 제빙기에 있어서,

상기 토출관의 상단에는 급수 차단시 관로에 있던 제빙수를 신속히 배출시킬 수 있도록 공기 유입공이 관통 형성되는 것을 특징으로 하는 냉장고용 제빙기 급수 구조.

청구항 2.

제 1항에 있어서, 상기 공기 유입공은 상기 토출관의 상측에 적어도 하나이상 관통되는 것을 특징으로 하는 냉장고용 제빙기 급수 구조.

도면

도면 1

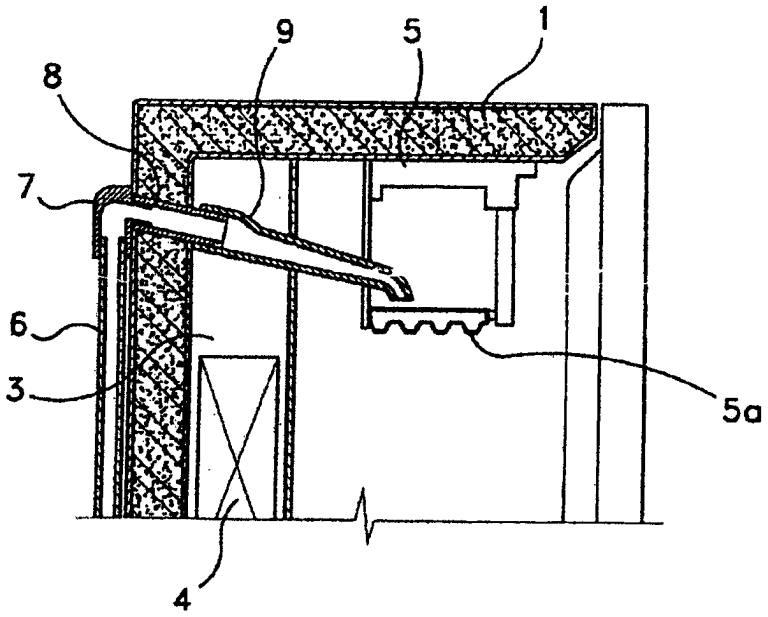

LG0000952

도면 2

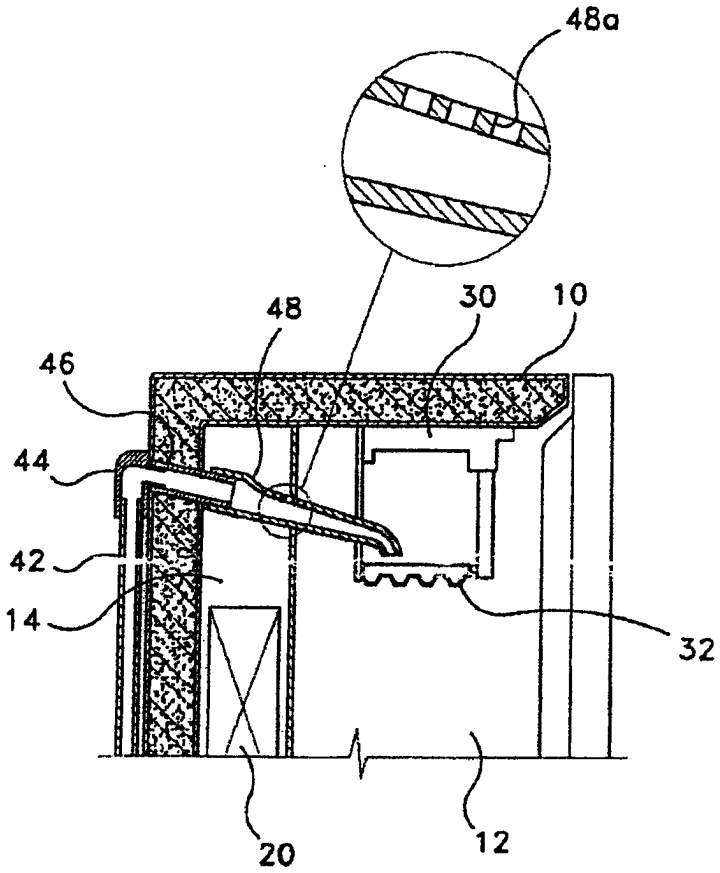

도면 3

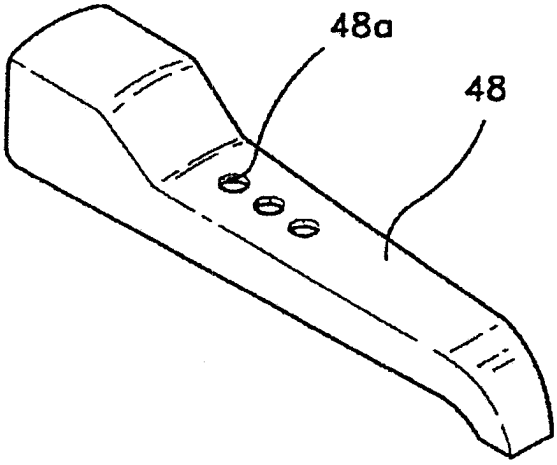

LG0000953

EXHIBIT B

Part 3

EXHIBIT 6

(19) 대한민국특허청(KR)
(12) 공개실용신안공보(U)

(51) Int. Cl.		(11) 공개번호	실1999-0030068
F25C 1/22		(43) 공개일자	1999년07월26일
(21) 출원번호	20-1997-0042739		
(22) 출원일자	1997년12월29일		
(71) 출원인	삼성전자 주식회사, 윤종용		
	대한민국		
	442-373		
	경기도 수원시 팔달구 매탄3동 416		
(72) 고안자	하대연		
	대한민국		
	120-011		
	서울특별시 서대문구 연희1동 132-75		
(74) 대리인	허성원		
(77) 심사청구	있음		
(54) 출원명	냉장고		

요약

본 고안은, 증발기제상히터파이프와, 제빙기와, 상기 제빙기의 급수를 위한 급수관을 갖는 냉장고에 관한 것으로서, 상기 증발기제상히터파이프와 상기 급수관을 상호 열전달이 가능하게 연결하는 열전도부재를 포함한다. 이에 따라, 급수관에 발생하는 결빙을 제거하기 위해 별도의 장치를 추가하지 않고, 증발기 표면에 착상되는 성에를 제거하기 위한 목적으로 설치된 제상히터파이프를 이용하여 급수관내의 결빙을 제거하므로, 제빙트레이에 용수공급을 원활하게 할 수 있고 별도의 추가장치의 설치에 따른 비용 및 소비전력을 절약할 수 있다.

대표도

도2

명세서

도면의 간단한 설명

도 1은 본 고안에 따른 냉장고의 측단면도,

도 2는 도 1의 냉동실의 부분확대도,

도 3은 종래의 냉장고의 측단면도이다.

* 도면의 주요 부분에 대한 부호의 설명

3 : 냉장고본체 7 : 냉동실

9 : 냉장실 21 : 제빙기

23 : 급수관 27 : 냉동용증발기

29 : 냉장용증발기 33 : 제상히터파이프

35 : 열전도부재

고안의 상세한 설명

고안의 목적

고안이 속하는 기술 및 그 분야의 종래기술

본 고안은, 냉장고에 관한 것으로서, 보다 상세하게는, 제빙기에 얼음 제조용 용수를 공급하는 급수관내의 결빙이 방지되도록 한 냉장고에 관한 것이다.

냉장고는 냉각실내에 수용되는 저장품들을 냉각하기 위한 냉동시스템을 구비하고 있다. 일반적인 냉동시스템은, 냉매를 압축하는 압축기와, 압축기로부터의 냉매를 응축하는 응축기 및 응축기로부터의 냉매를 증발시켜 냉기를 발생하는 증발기로 이루어진다.

LG0000944

도 3은 종래의 냉장고의 측단면도이다. 이 도면에 도시된 바와 같이, 냉장고(101)는 냉장고본체(103)내에 중간격벽(105)에 의해 냉동실(107) 및 냉장실(109)이 구획되어 있다. 냉동실(107)과 냉장실(109)의 전면개구부에는 일측의 힌지(미도시)를 중심으로 회동개폐되는 냉동실도어(111)와 냉장실도어(113)가 각각 설치되어 있다. 냉장실(109)내에는 다수의 수납선반(115)이 냉각공간을 구획하고 있어 저장품들을 층상으로 저장할 수 있다.

냉동실(107)의 상부영역에는 얼음을 만드는 제빙기(121)가 설치되어 있다. 제빙기(121)는 제빙을 위한 용수를 수용하는 제빙트레이(137)와, 제빙트레이(137)로부터 이탈되는 얼음을 저장하는 얼음큐브(139) 그리고, 제조된 얼음을 제빙트레이(137)로부터 이탈시켜 얼음큐브(139)에 저장시키는 이빙모터(141)로 구성되어 있다. 제빙트레이(137)의 상부에는 외부로부터 공급되는 얼음제조용 용수를 유출시키는 급수관(123)이 설치되어 있다. 이 급수관(123)은 냉장고본체(103)의 배면에 설치된 도시하지 않은 급수호스와 연결되어 있으며, 급수호스은 냉장고본체(103)의 후단하부에 설치된 도시하지 않은 급수밸브에 연결되어 있다.

그리고, 제빙트레이(137)의 하부에는 제빙트레이(137)의 온도를 감지하여 급수상태나 제빙상태를 판단할 수 있도록 하는 이빙센서(143)가 설치되어 있다.

냉동실(107)의 배면과 냉장고본체(103)의 후벽사이에는 냉동용증발기(103)가 설치되어 있고, 냉동용증발기(103)와 인접하여 송풍팬(131a)이 설치되어 있다. 또한, 냉동용증발기(127)에는 착상을 제거하기 위한 제상히터파이프(133)가 설치되어 있다. 냉장실(109)의 배면과 냉장고본체(103)의 후벽사이에도 냉장용증발기(129)와 송풍팬(131b)이 설치되어 있다.

그런데, 이러한 종래의 냉장고에서는, 제빙트레이(137)에 제빙용 용수가 차게되면 제어부(미도시)의 신호에 의해서 급수밸브(미도시)가 닫히게되는데 이 때, 급수관(122)에 남아있는 물은 경사각에 의해 제빙트레이(137)에 흘러가지만 일부는 급수관(122)의 절곡부위에 고이게 된다. 급수관(123)의 절곡부에 고인 물은 급수관(123)이 냉동실(107)내에 노출되어 있어 냉동실(107)내의 온도에 의해 결빙된다. 따라서, 결빙이 증가하게 되면 급수관(123)이 막혀 제빙트레이(137)로 얼음제조를 위한 용수공급이 불가능하게 되는 문제점이 있다.

고안이 이루고자 하는 기술적 과제

따라서, 본 고안의 목적은, 종래의 이러한 문제점을 해결하기 위해 고안한 것으로, 제빙트레이에 용수를 공급하는 급수관내에 결빙이 발생하지 않도록 한 냉장고를 제공하는 것이다.

고안의 구성 및 작용

상기 목적은, 본 고안에 따라, 증발기제상히터파이프와, 제빙기와, 상기 제빙기의 급수를 위한 급수관을 갖는 냉장고에 있어서, 상기 증발기제상히터파이프와 상기 급수관을 상호 열전달이 가능하게 연결하는 열전도부재를 포함하는 것을 특징으로 하는 냉장고에 의해 달성된다.

여기서, 상기 급수관은 열전도율이 높은 금속재인 것이 바람직하다.

이하에서는 첨부도면을 참조하여 본 고안에 대해 상세히 설명한다.

도 1은 본 고안에 따른 냉장고측단면도이다. 이 도면에 도시된 바와 같이, 도 3과 관련하여 설명한 것과 마찬가지로, 냉장고(1)는 냉장고본체(3)내에 중간격벽(5)에 의해 냉동실(7) 및 냉장실(9)이 구획되어 있다. 냉동실(7)과 냉장실(9)의 전면개구부에는 일측의 힌지(미도시)를 중심으로 회동개폐되는 냉동실도어(11)와 냉장실도어(13)가 각각 설치되어 있다.

냉장실(9)내에는 다수의 수납선반(15)이 냉각공간을 구획하고 있어 저장품들을 층상으로 저장할 수 있다. 냉장실(9)의 상부영역에는 특선실(17)이 마련되어 있고, 하부영역에는 야채저장실(19)이 마련되어 있다. 특선실(17)내 온도는 냉장실(9)의 온도보다 상대적으로 소정 저온으로 유지되며, 야채저장실(19)내 온도는 냉장실(9)의 온도보다 상대적으로 고온으로 유지된다. 이에 따라, 냉장실(9)에 저장되는 저장품들의 특성에 따라 신선도를 유지시킬 수 있다.

냉동실(7)내에는 냉장실(9)과 마찬가지로, 다수의 수납선반(15)이 냉각공간을 구획하고 있어 저장품들을 층상으로 저장할 수 있고, 냉동실(7)내의 상부영역에는 얼음을 만드는 제빙기(21)가 설치되어 있으며, 제빙기(21)에 얼음제조를 위한 용수를 공급하는 급수관(23)이 마련되어 있다.

제빙기(21)에 얼음제조를 위해 용수를 공급하는 급수관(23)은, 냉장고본체(3) 하단에 위치한 물탱크(미도시)와 급수밸브(미도시)에 연결되어 있다. 얼음을 제조하기 위한 용수를 공급하기 위해 급수밸브(미도시)가 열리면 물탱크(미도시)에 담겨진 용수가 급수관(23)을 통해 제빙트레이에 공급된다.

냉장고본체(3)의 후면하단에는 냉매를 압축하는 압축기(25)가 설치되어 있다. 냉동실(7)과 냉장실(9)의 후벽면과 냉장고본체(3)의 후벽사이에는 냉매의 증발잠열에 의해 주위의 공기를 냉각하는 냉동용증발기(27)와 냉장용증발기(29)가 각각 설치되어 있다. 각 증발기(27,29)와 인접한 곳에는 냉기의 송풍을 위한 송풍팬(31)이 각각 마련되어 있다. 그리고, 증발기(27,29)의 표면에 착상된 성에를 제거하기 위해 제상히터파이프(33)가 증발기내(27,29)에 삽입되어 있다.

또한, 급수관(23)과 냉동용증발기(27)에 삽입된 제상히터파이프(33)를 상호 연결하는 열전도부재(35)가 설치되어 있다.

LG0000945

도 2는 도 1의 냉동실의 부분확대도이다. 이 도면에 도시된 바와 같이, 제빙기(21)는 제빙을 위한 용수를 수용하는 제빙트레이(37)와, 제빙트레이(37)로부터 이탈되는 얼음을 저장하는 얼음큐브(39) 그리고, 제조된 얼음을 제빙트레이(37)로부터 이탈시켜 얼음큐브(39)에 저장시키는 이빙모터(41)로 구성되어 있다. 제빙트레이(37)의 하부에는 제빙트레이(37)의 온도를 감지하여 급수상태나 제빙상태를 판단할 수 있도록 하는 이빙센서(43)가 설치되어 있다. 또한, 제빙트레이(37)에 얼음을 제조하기 위해 용수를 공급하는 급수관(23)은 열전도율이 높은 동이나 알루미늄같은 금속재이며, 제빙트레이(37)를 향해 하향절곡되어 경사지게 설치되어 있다.

냉동응즘발기(27)에는 냉매가 흐르는 냉매파이프(45)와 복수의 판상인 전열핀(47)으로 구성되어 있다. 전열핀(47)에는 냉매파이프(45)를 수용되는 다수의 수용공(미도시)과 제상히터파이프(33)를 수용하는 다수의 수용공(미도시)이 형성되어 있다. 또한, 전원을 인가하면 발열하는 제상히터파이프(33)는 지그재그형상으로 전열핀(47)에 삽입된 냉매파이프(45) 사이에 전열핀(47)을 관통하도록 배치되어 있다.

한편, 열전도부재(35)의 일측은 급수관(23)에 타측은 제상히터파이프(33)에 접촉되어 있고, 접촉부위는 접촉면적을 크게 하기 위해 급수관(23)과 제상히터파이프(33)를 감싸는 형상으로 되어 있다.

이러한 구성에 의하여, 제빙트레이(37)에 물이 차게되면 제어부(미도시)의 신호에 의해 급수밸브(미도시)가 닫혀 급수가 중단되고, 급수관(23)에 남아 있는 물은 급수관(23)의 하향 경사각에 의해 제빙트레이(37)로 흘러가지만 일부는 급수관(23)의 절곡부위에 고이게 된다. 이렇게 급수관(23)내에 고인 물은 급수관(23)이 냉동실(7)내에 노출되어 있어 냉동실(7)내의 온도에 의해 결빙이 된다. 하지만, 급수관(23)과 제상히터파이프(33)가 열전도부재(35)로 상호 연결되어 있으므로, 제상히터파이프(33)가 증발기의 제상을 목적으로 발열할 때마다 제상히터파이프(33)의 열이 연결부재(35)를 통해 급수관(23)으로 전달되어 급수관(23)내의 결빙을 녹이게 된다.

이에 따라, 제빙트레이(37)에 얼음을 제조하기 위해 용수를 공급하는 급수관(23)의 용수공급은 원활하게 되며, 급수관(23)의 결빙을 제거하기 위한 별도의 추가장치가 필요없게 된다.

고안의 효과

이상에서 설명한 바와 같이, 본 고안에 따르면, 제빙트레이에 얼음을 제조하기 위해 용수를 공급하는 급수관에 발생하는 결빙을 제거하기 위해 별도의 장치를 추가하지 않고, 증발기 표면에 착상되는 성에를 제거하기 위한 목적으로 설치된 제상히터파이프를 이용하므로, 제빙트레이에 용수공급을 원활하게 할 수 있고 별도의 추가장치의 설치에 따른 비용 및 소비전력을 절약할 수 있는 냉장고가 제공된다.

(57) 청구의 범위

청구항 1.

증발기제상히터파이프와, 제빙기와, 상기 제빙기의 급수를 위한 급수관을 갖는 냉장고에 있어서,

상기 증발기제상히터파이프와 상기 급수관을 상호 열전달이 가능하게 연결하는 열전도부재를 포함하는 것을 특징으로 하는 냉장고.

청구항 2.

제 1항에 있어서,

상기 급수관은 열전도율이 높은 금속재인 것을 특징으로 하는 냉장고.

도면

LG0000946

도면 1

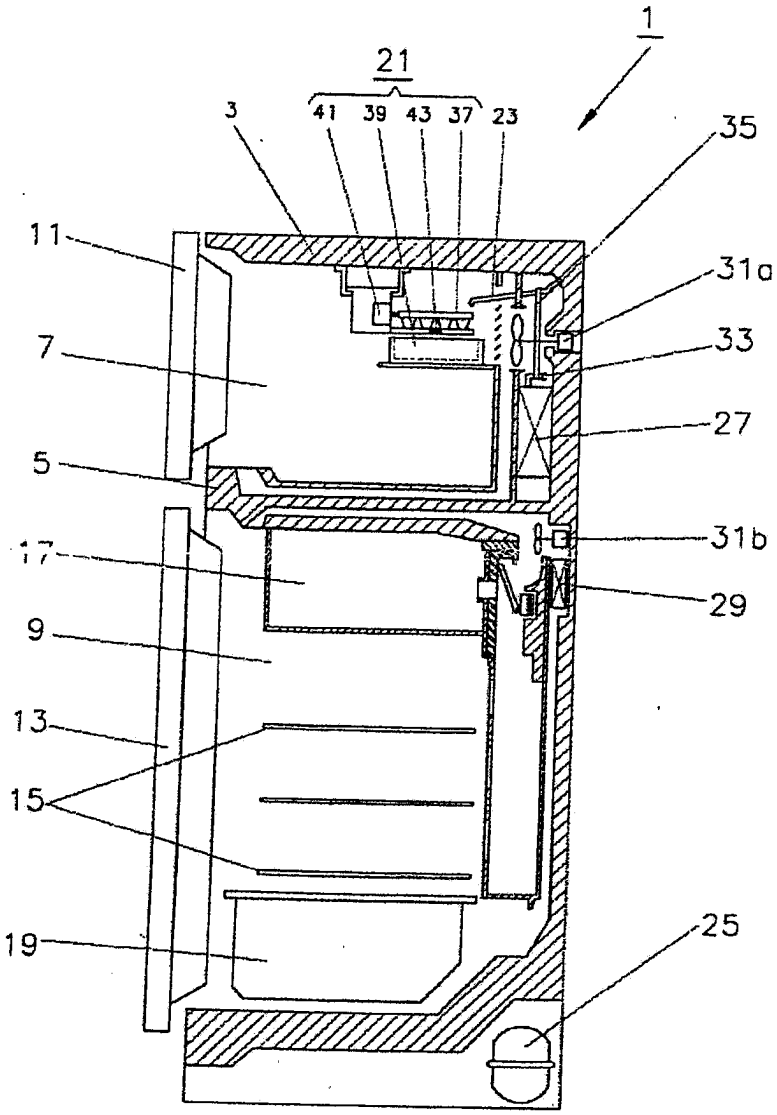

LG0000947

도면 2

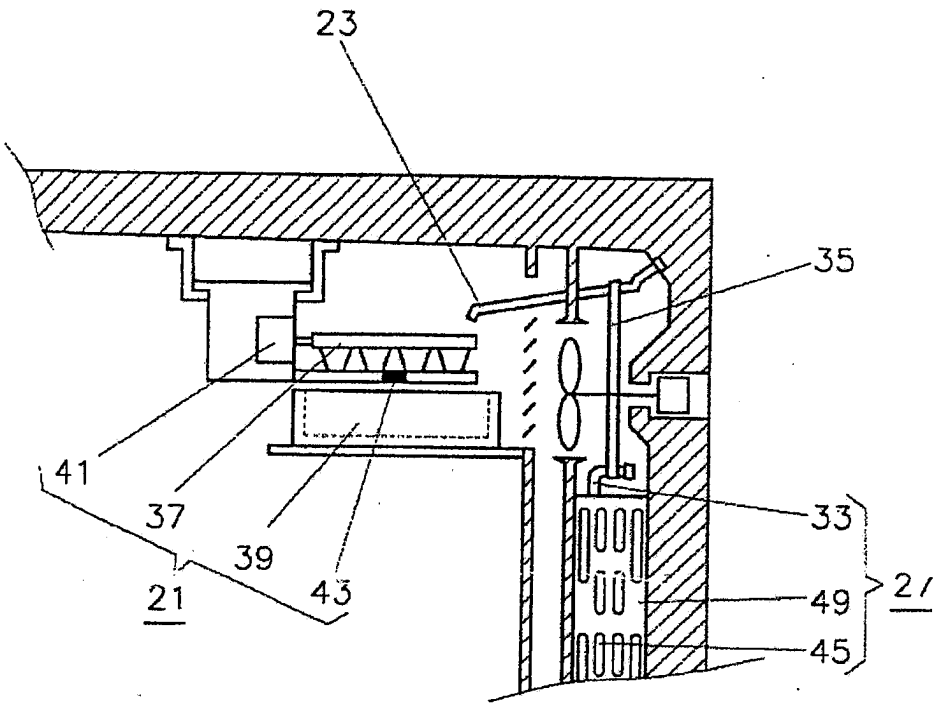

LG0000948

도면 3

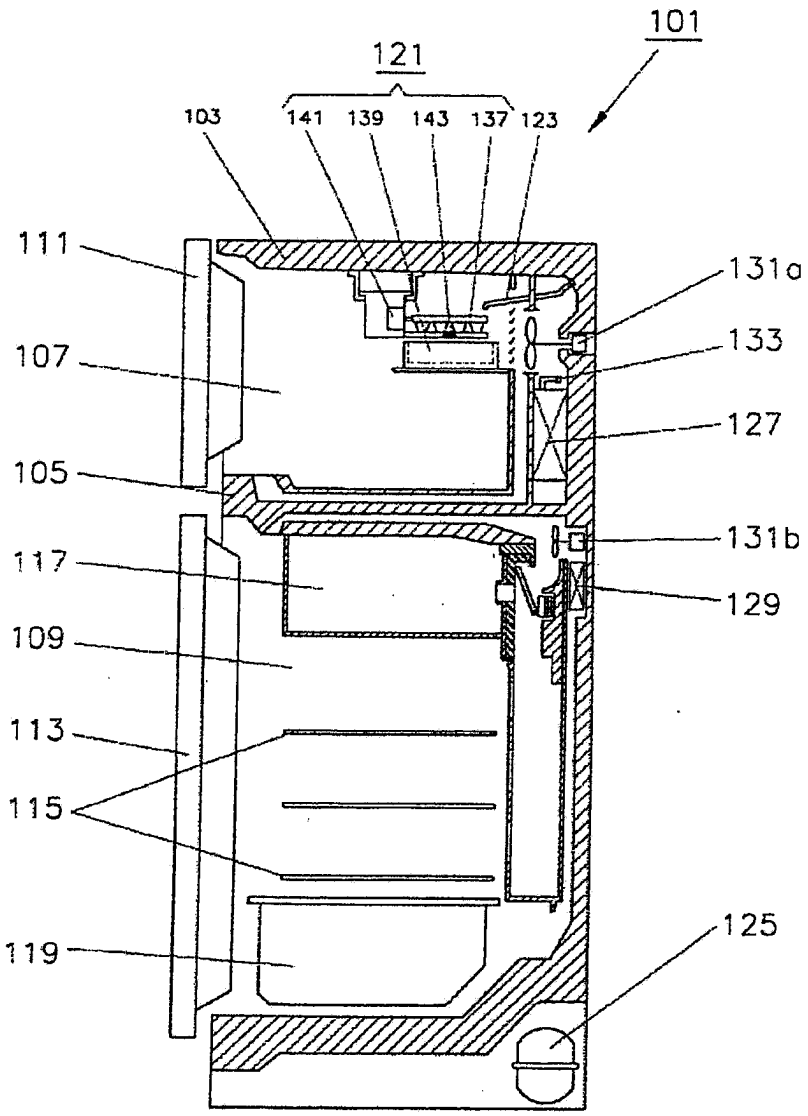

LG0000949

EXHIBIT 7

(19)日本国特許庁（ＪＰ）　(12)公開特許公報（Ａ）　(11)特許出願公開番号

特開平6－257935

(43)公開日　平成６年(1994)９月16日

(51)Int.Cl.[5]	識別記号	庁内整理番号	ＦＩ	技術表示箇所
Ｆ２５Ｄ　25/00		Ｇ　7380－3Ｌ		

審査請求　未請求　請求項の数２　ＯＬ　（全　８　頁）

(21)出願番号　特願平5－39678

(22)出願日　平成５年(1993)３月１日

(71)出願人　000003078
株式会社東芝
神奈川県川崎市幸区堀川町72番地
(72)発明者　山本　彰
大阪府茨木市太田東芝町１番６号　株式会社東芝大阪工場内
(74)代理人　弁理士　佐藤　強　（外１名）

(54)【発明の名称】　貯蔵庫

(57)【要約】

【目的】　貯蔵室内に引出し式の貯蔵容器を備えるものにあって、簡単な構成で２段ストッパ構造を形成する。

【構成】　冷凍室の内側壁部に、溝部２２を有する固定レール２１を設ける一方、扉に連結される貯蔵容器の側壁部に凹溝２４を有する可動レール２３を設ける。それらの間に、凹溝２４を相対的に転動する案内ローラ２７及び幅狭ローラ２８を備える中間レール２５を設ける。凹溝２４の途中部位に第１の幅狭部３０を設けると共に、後端側に第２の幅狭部３１を設ける。貯蔵容器の引出時に、案内ローラ２７は、まず第１の幅狭部３０により通過が規制されて可動レール２３が第１の引出位置にて停止する。さらに強い力で引出されると、案内ローラ２７が第１の幅狭部３０を相対的に乗越えて移動し、遂には案内ローラ２７が第２の幅狭部３１によって通過が規制され、第２の引出位置に停止する。

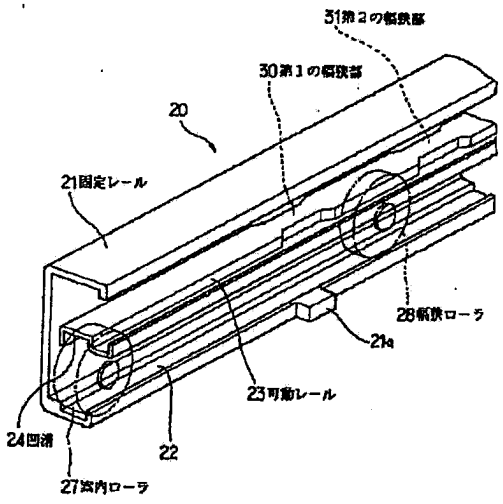

LG0000925

LG0000925

【特許請求の範囲】

【請求項１】　貯蔵室と、支持部材に着脱可能に保持されて前記貯蔵室内に出し入れされる貯蔵容器と、前記貯蔵室に前記貯蔵容器の出入方向に延びて設けられた固定レールと、前端側部分に案内ローラを備えてなり前記固定レールに案内される中間レールと、前記支持部材に設けられ前記出入方向に延びる凹溝を有しこの凹溝内を前記案内ローラが相対的に転動することにより前記中間レールに案内される可動レールとを具備し、

前記可動レールの凹溝の途中部位に、前記案内ローラの通過を規制して該可動レールを第１の引出位置に停止させる第１の幅狭部を設けると共に、前記凹溝の後端側部位に、前記案内ローラが第１の幅狭部による規制を越えて更に前記凹溝内を移動したときに該案内ローラの通過を規制して該可動レールを第２の引出位置に停止させる第２の幅狭部を設けたことを特徴とする貯蔵庫。

【請求項２】　前記中間レールは、前記可動レールの凹溝内を相対的に転動して前記案内ローラと共に可動レールを案内する幅狭ローラを備え、この幅狭ローラの幅寸法を前記第１及び第２の幅狭部の幅寸法よりも小さく構成したことを特徴とする請求項１記載の貯蔵庫。

【発明の詳細な説明】

【０００１】

【産業上の利用分野】本発明は、貯蔵容器を貯蔵室内にレール機構を介して出し入れ可能に収納させるようにした貯蔵庫に関する。

【０００２】

【従来の技術】近年、貯蔵庫例えば家庭用の冷蔵庫において、いわゆる引出し式の冷凍室や野菜室を設けたものが供されてきている。図９に示すように、このものでは、前面が開口した図示しない冷凍室（あるいは野菜室）内に、その開口部を開閉する扉１に連結された貯蔵容器２が、レール機構を介して出し入れ可能に設けられる。即ち、冷凍室の両内側壁には、前後方向に延びる固定レール３が設けられ、一方、扉１の背面側に取付けられ前記貯蔵容器２を保持する枠部材４の左右両側面部には、前後方向に延びる可動レール５が一体に設けられている。前記固定レール３の上面側には溝部３ａが形成され、可動レール５の下面側にも凹溝５ａが形成されている。

【０００３】前記固定レール３と可動レール５との間には、中間レール６が設けられている。この中間レール６は、前記固定レール３の溝部３ａ内を転動する例えば３個のローラ７を備えており、もって前記固定レール３に沿って前後方向に移動されるようになっている。このとき、固定レール３に対する中間レール６の移動可能範囲は、固定レール３の側縁部に設けられた２個の突起３ｂ，３ｃと、中間レール６の下面に設けられた突起６ａとにより規制されるようになっている。

【０００４】一方、前記可動レール５は、凹溝５ａにおいて前記ローラ７上に載置され、そのローラ７が凹溝５ａ内を相対的に転動することにより、中間レール６に案内されて前後方向に移動されるようになっている。これにて、使用者による扉１の引出しあるいは押込み操作に伴って貯蔵容器２は冷凍室内にスムーズに出し入れされるのである。尚、貯蔵容器２は、枠部材４に上方から嵌込まれているだけなので、清掃時などには枠部材４から取外すことができるようになっている。

【０００５】

【発明が解決しようとする課題】ところで、上記のようなレール構造にあっては、可動レール５（貯蔵容器２）の引出位置を規制するために、前記可動レール５の後端部下面にストッパ部材８が設けられると共に、中間レール６の前端部上面にストッパ部材９が設けられ、以て、いわゆる２段ストッパ構造が構成されている。これにて、まず、前記ストッパ部材８が中間レール６の中央のローラ７に当接することにより、可動レール５の移動が規制され、このとき、貯蔵容器２は貯蔵物を出し入れするに適した位置に停止されるようになっている。

【０００６】さらに、その位置からさらに強い力によって可動レール５が引出されることにより、ストッパ部材８が中央部のローラ７を乗越えて前方に移動し、遂にはストッパ部材９に当接することにより可動レール５の移動が再び規制される。このとき、貯蔵容器２は枠部材４からの分離が可能な位置に停止されるようになっているのである。

【０００７】しかしながら、従来のものでは、いわゆる２段ストッパ構造を構成するために、別部品のストッパ部材８及びストッパ部材９が必要であるため、部品数が多くなって組立作業性に劣るといった問題点があった。

【０００８】本発明は上記事情に鑑みてなされたものであり、その目的は、貯蔵室内に引出し式の貯蔵容器を備えるものにあって、簡単な構成でいわゆる２段ストッパ構造を形成することができる貯蔵庫を提供するにある。

【０００９】

【課題を解決するための手段】本発明の貯蔵庫は、貯蔵室と、支持部材に着脱可能に保持されて前記貯蔵室内に出し入れされる貯蔵容器と、前記貯蔵室に前記貯蔵容器の出入方向に延びて設けられた固定レールと、前端側部分に案内ローラを備えてなり前記固定レールに案内される中間レールと、前記支持部材に設けられ前記出入方向に延びる凹溝を有しこの凹溝内を前記案内ローラが相対的に転動することにより前記中間レールに案内される可動レールとを具備し、前記可動レールの凹溝の途中部位に、前記案内ローラの通過を規制して該可動レールを第１の引出位置に停止させる第１の幅狭部を設けると共に、前記凹溝の後端側部位に、前記案内ローラが第１の幅狭部による規制を越えて更に前記凹溝内を移動したときに該案内ローラの通過を規制して該可動レールを第２の引出位置に停止させる第２の幅狭部を設けたところに

LG0000926

LG0000926

特徴を有する。

【００１０】また、この場合、前記中間レールに、前記可動レールの凹溝内を相対的に転動して前記案内ローラと共に可動レールを案内する幅狭ローラを設け、この幅狭ローラの幅寸法を前記第１及び第２の幅狭部の幅寸法よりも小さく構成するようにしても良い。

【００１１】

【作用】上記手段によれば、固定レールに中間レールが案内されると共に、可動レールの凹溝内を中間レールの案内ローラが転動することに基づいて、貯蔵容器は、貯蔵室にスムーズに出し入れされるようになる。この際、可動レールが引出されるに伴い、凹溝の途中部位に設けられた第１の幅狭部によって案内ローラの相対移動が規制されることにより、可動レールは第１の引出位置に停止されるようになる。そして、可動レールがその位置からさらに引出されるに伴い、案内ローラが第１の幅狭部による規制を越えてさらに凹溝内を相対移動し、遂には凹溝の後端側部位に設けられた第２の幅狭部によって案内ローラの相対移動が規制されることにより、可動レールが第２の引出位置に停止されるようになる。

【００１２】これにて、いわゆる２段ストッパ構造が構成されるのであるが、このとき、凹溝に設けられた第１及び第２の幅狭部並びに案内ローラにより２段ストッパ構造を構成することができるので、ストッパ部材等の別部品が不要となり、簡単な構成で済ませることができる。

【００１３】また、中間レールに、前記案内ローラに加えて前記第１及び第２の幅狭部の幅寸法よりも小さい幅寸法の幅狭ローラを設けるようにすれば、可動レールを複数個のローラにより安定して案内することができ、しかも、幅狭ローラは、凹溝の第１及び第２の幅狭部を容易に通過するので、上記２段ストッパ構造の妨げとなることはない。

【００１４】

【実施例】以下、本発明を家庭用冷蔵庫に適用した一実施例について、図１乃至図８を参照して説明する。

【００１５】まず、図８は本実施例に係る貯蔵庫たる冷蔵庫１１の外観を示しており、冷蔵庫１１は、上部に両開き式の扉１２により開閉される冷蔵室を有し、その下方に引出し式の製氷室及び第１の冷凍室を左右に有し、さらにその下方にこれも引出し式の第２の冷凍室１３を有し、最下部にやはり引出し式の野菜室を有して構成されている。これら製氷室，第１の冷凍室，第２の冷凍室１３，野菜室の前面には、夫々扉１４，１５，１６，１７が設けられている。

【００１６】ここで、前記第２の冷凍室１３の構成について、図１乃至図７も参照して述べる。詳しく図示はしないが、貯蔵室としての冷凍室１３は、上下左右及び奥方を断熱壁に囲まれた状態に構成され、前面に前記扉１６により開閉される矩形の開口部を有している。この冷凍室１３内には、図示しない冷却装置からの冷気が上方から供給されるようになっている。

【００１７】この冷凍室１３内には、冷凍貯蔵物を収容するためのほぼ矩形容器状の貯蔵容器１８が、前記扉１６の裏面側に連結されて出し入れ可能に設けられるようになっている。この場合、扉１６の裏面には、図２に示すように、全体としてほぼコ字状をなす金属製の支持部材１９が取付けられ、貯蔵容器１８は、この支持部材１９内に上方から嵌め込まれることにより着脱可能に保持されるようになっている。

【００１８】そして、前記貯蔵容器１８と冷凍室１３との間には、該貯蔵容器１８を出入れ方向（前後方向）に案内するためのレール機構２０が設けられている。このレール機構２０について以下詳述する。尚、レール機構２０は、冷凍室１３の左右両側部において対称的に設けられており、図１，図３乃至図８は、そのうち左側のものを代表させて示している。

【００１９】即ち、前記冷凍室１３の左右の両内側壁部１３ａには、該冷凍室１３の開口部から奥方へ延びる例えばプラスチック製の固定レール２１が設けられている。図１及び図４に示すように、この固定レール２１は、正面略コ字状をなし、その開放部分が内側を向くようにして冷凍室１３の側壁部１３ａに固定されている。そして、図５にも示すように、この固定レール２１の下辺部の上面には、凹状をなす溝部２２が前後方向に延びて形成されている。また、図２及び図５に示すように、この固定レール２１の途中部位の２か所には、ストッパ部２１ａ，２１ｂが側方に突出して一体に設けられている。

【００２０】一方、前記貯蔵容器１８側には、貯蔵容器１８の左右の両側部に位置して前後方向に延びる可動レール２３が設けられている。詳しくは後述するが、この可動レール２３は、前記支持部材１９に側方に延出するように一体的に設けられており、前記固定レール２１とは逆に、下面側に開放する凹溝２４が前後方向に延びて形成されている。

【００２１】そして、前記固定レール２１と可動レール２３との間には、中間レール２５が設けられる。この中間レール２５は、金属板材を前記固定レール２１よりも一回り小さい正面ほぼコ字状に折曲形成して構成され、後述するように、その下辺部の切欠部分に３個（図２参照）のローラを回転自在に有すると共に、後端上部に上ローラ２６を回転自在に有して構成されている。

【００２２】この中間レール２５は、前記３個のローラが前記溝部２２内に配置されることにより固定レール２１に載置状態に支持され、それらローラが溝部２２内を転動することにより固定レール２１に沿って前後方向に移動されるようになっている。また、図２に示すように、この中間レール２５の下辺部のほぼ中央部には、下方に突出するストッパ部２５ａが一体に形成されてお

LG0000927

LG0000927

り、このストッパ部２５ａが前記ストッパ部２１ａ，２１ｂに係止されることにより、固定レール２１に対する中間レール２５の移動範囲が規制されている。尚、このとき、前記上ローラ２６は、固定レール２１の上辺部の下面を転動するようになっている。

【００２３】さらに、前記可動レール２３は、図１，図４に示すように、前記凹溝２４が前記３個のローラ上に載置されるようにして中間レール２５に支持され、もって、ローラが相対的に凹溝２４内を転動することによって、中間レール２５に沿って前後方向に移動されるようになっている。これにて、貯蔵容器１８は、使用者の扉１６の引出し及び押込み操作により、レール機構２０により案内されて、冷凍室１３内に出し入れされるようになっているのである。

【００２４】さて、前記レール機構２０には、前記可動レール２３（貯蔵容器１８）の停止位置を２段階に規制するためのいわゆる２段ストッパ構造が設けられている。以下、この２段ストッパ構造について詳述する。

【００２５】まず、前記中間レール２５に設けられた３個のローラのうち、前端部分のものが本発明にいう案内ローラ２７であり、中間部分及び後端側部分に位置する残りの２個が、本発明にいう幅狭ローラ２８及び２９である。ここで、案内ローラ２７の幅寸法Ｌ１（図６参照）は、前記溝部２２及び前記凹溝２４の幅寸法Ｌ２及びＬ３（図５及び図７参照）よりも若干小さく、また、図６に示すように、幅狭ローラ２８及び２９の幅寸法Ｌ４は、案内ローラ２７の幅寸法Ｌ１よりも小さく構成されている。

【００２６】そして、図１，図２及び図７に示すように、前記可動レール２３には、前記凹溝２４の途中部位に位置して第１の幅狭部３０が設けられていると共に、凹溝２４の後端側部位に位置して第２の幅狭部３１が設けられている。これら第１及び第２の幅狭部３０及び３１は、可動レール２３を構成する金属板のうち凹溝２４の左右の側壁部部分を内方への絞り成形することにより形成されている。

【００２７】この場合、凹溝２４の第１及び第２の幅狭部３０及び３１の幅寸法Ｌ５（図７参照）は、前記案内ローラ２７の幅寸法Ｌ１よりも小さく、且つ前記幅狭ローラ２８及び２９の幅寸法Ｌ４よりも大きく構成されている。従って、案内ローラ２７が凹溝２４内を相対的に転動する際に、第１及び第２の幅狭部３０及び３１により通過が規制されるようになっていると共に、幅狭ローラ２８及び２９が凹溝２４内を相対的に転動する際には、第１及び第２の幅狭部３０及び３１をスムーズに通過することが可能とされている。

【００２８】そして、前記第１の幅狭部３０は、図３（ａ）に示すように、中間レール２５が最大に引出された状態（ストッパ部２５ａがストッパ部２１ａに当接している状態）で、案内ローラ２７の相対移動を規制することにより、可動レール２３ひいては貯蔵容器１８が貯蔵物を出し入れするに適した第１の引出位置に停止されるような位置に形成されている。一方、前記第２の幅狭部３１は、図３（ｂ）に示すように、案内ローラ２７が前記第１の幅狭部３０による規制を越えてさらに凹溝２４内を相対移動したときに、案内ローラ２７の相対移動を規制することにより、貯蔵容器１８が支持部材１９から分離可能な第２の引出位置に停止されるような位置に形成されているのである。

【００２９】次に、上記構成の作用について述べる。貯蔵容器１８を冷凍室１３から引出して貯蔵物の出し入れを行うためには、使用者は扉１６を引出し操作する。すると、扉１６と一体の支持部材１９即ち可動レール２３は、前記中間レール２５の各ローラ２７，２８，２９が凹溝２４内を相対的に転動しまたそれらローラ２７，２８，２９が溝部２２内を転動することに伴い、中間レール２５を介して固定レール２１に案内され、もって貯蔵容器１８が軽い力でスムーズに手前側に引出される。また、引出された貯蔵容器１５を冷凍室１３内に収納するには、使用者は扉１６を押込み操作する。このときも同様に、貯蔵容器１８は、レール機構２０により案内されて軽い力でスムーズに移動するようになる。

【００３０】而して、前記引出し操作に伴い、中間レール２５のストッパ部２５ａが固定レール２１のストッパ部２１ａに当接することにより、中間レール２５は最大量引出されることになる。これと共に、可動レール２３の引出しに伴って、中間レール２５の各ローラ２７，２８，２９が、可動レール２３の凹溝２４内を相対的に矢印Ａ方向（図７参照）に移動するのであるが、このとき、２個の幅狭ローラ２９及び２８は、第１及び第２の幅狭部３０及び３１を通過する。

【００３１】ところが、案内ローラ２７が、遂に第１の幅狭部３０部分に至ったときに、この第１の幅狭部３０により通過が規制されて可動レール２３がこの第１の引出位置にて停止する。図３（ａ）に示すように、この状態では、貯蔵容器１８が貯蔵物を出し入れするに適したところまで引出されているので、使用者は、貯蔵物の出し入れの作業を容易に行うことができる。

【００３２】そして、使用者が、例えば清掃などのために貯蔵容器１８を取出したい場合には、可動レール２３の第１の引出位置から、さらに強い力で扉１６の引出し操作を行う。すると、可動レール２３がさらに前方に移動し、これに伴い、案内ローラ２７が第１の幅狭部３０を相対的に乗越えるようになり、さらに凹溝２４内を矢印Ａ方向に相対移動し、遂には凹溝２４の後端側部位に設けられた第２の幅狭部３１によってその通過が規制されることになる。

【００３３】これにより、図３（ｂ）に示すように、可動レール２３が第２の引出位置に停止し、貯蔵容器１８が支持部材１９からの分離が可能とされ、使用者は、容

LG0000928

易に貯蔵容器１８を支持部材１９から上方へ抜出して取外すことができるのである。この状態でも、扉１６や支持部材１９は依然として固定レール２１即ち冷凍室１３の内壁部に支持され、外れるといったことはないのである。

【００３４】このように本実施例によれば、可動レール２３の凹溝２４内に、案内ローラ２７より幅狭の第１及び第２の幅狭部３０及び３１を形成することにより、いわゆる２段ストッパ構造を構成することができた。従って、従来のような別部品のストッパ部材８及びストッパ部材９を組付けて２段ストッパ構造を構成していたものと異なり、ストッパ部材等の別部品が不要となり、簡単な構成で２段ストッパ構造を形成することができるようになったのである。

【００３５】また、特に本実施例では、中間レール２５に、案内ローラ２７に加えて第１及び第２の幅狭部３０及び３１よりも小さい幅寸法の幅狭ローラ２８，２９を設けるようにしたので、可動レール２３を複数個のローラ２７，２８，２９により安定して案内することができるという効果を得ることができる。この場合、幅狭ローラ２８，２９は、凹溝２４の第１及び第２の幅狭部３０及び３１を容易に通過するので、上記２段ストッパ構造の妨げとならないことは勿論である。

【００３６】尚、本発明は上記し且つ図面に示した実施例に限定されるものではなく、例えば冷蔵庫以外の貯蔵庫全般に適用できるなど、要旨を逸脱しない範囲内で適宜変更して実施し得るものである。

【００３７】

【発明の効果】以上の説明にて明らかなように、本発明の貯蔵庫によれば、貯蔵室内に引出し式の貯蔵容器を備えるものにあって、可動レールの凹溝の途中部位に、案内ローラの通過を規制して該可動レールを第１の引出位置に停止させる第１の幅狭部を設けると共に、凹溝の後端側部位に、案内ローラが第１の幅狭部による規制を越えて更に凹溝内を移動したときに該案内ローラの通過を規制して可動レールを第２の引出位置に停止させる第２の幅狭部を設けたので、簡単な構成でいわゆる２段ストッパ構造を形成することができるという優れた実用的効果を奏するものである。

【００３８】また、この場合、中間レールに、可動レールの凹溝内を相対的に転動して案内ローラと共に可動レールを案内する幅狭ローラを設け、この幅狭ローラの幅寸法を前記第１及び第２の幅狭部の幅寸法よりも小さく構成するようにすれば、可動レールを複数個のローラにより安定して案内することができ、しかも上記２段ストッパ構造の妨げとなることはないのである。

【図面の簡単な説明】

【図１】本発明の一実施例を示すもので、レール機構部分の拡大斜視図

【図２】要部の分解斜視図

【図３】可動レールが第１の引出位置に停止した状態（ａ）及び第２の引出位置に停止した状態（ｂ）を示す要部の縦断側面図

【図４】レール機構部分の縦断正面図

【図５】固定レールの先端部部分の横断上面図

【図６】中間レールの先端部部分の横断上面図

【図７】可動レールの先端部部分の横断上面図

【図８】冷蔵庫の斜視図

【図９】従来例を示す図２相当図

【符号の説明】

図面中、１１は冷蔵庫（貯蔵庫）、１３は冷凍室（貯蔵室）、１６は扉、１８は貯蔵容器、１９は支持部材、２０はレール機構、２１は固定レール、２１ａ，２１ｂはストッパ部、２２は溝部、２３は可動レール、２４は凹溝、２５は中間レール、２５ａはストッパ部、２６は上ローラ、２７は案内ローラ、２８，２９は幅狭ローラ、３０は第１の幅狭部、３１は第２の幅狭部を示す。

【図４】

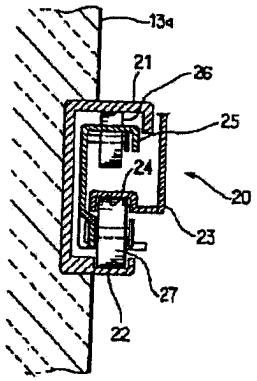

LG0000929

LG0000929

【図１】

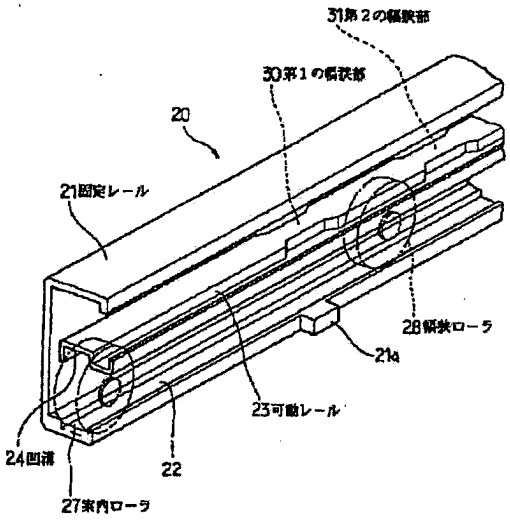

【図２】

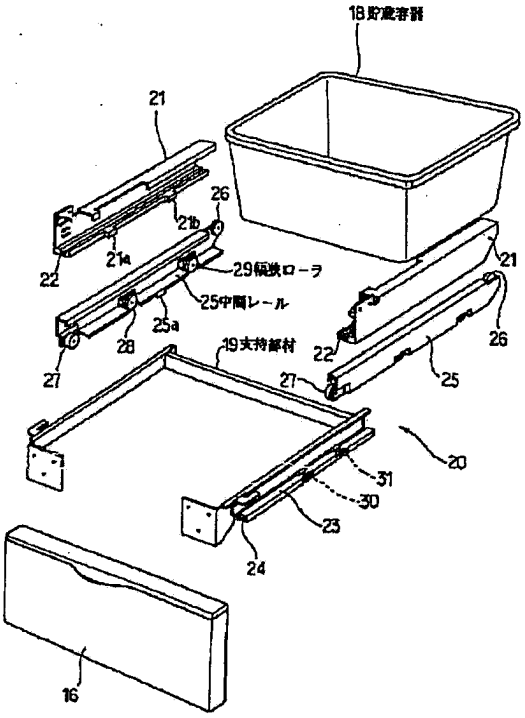

【図３】

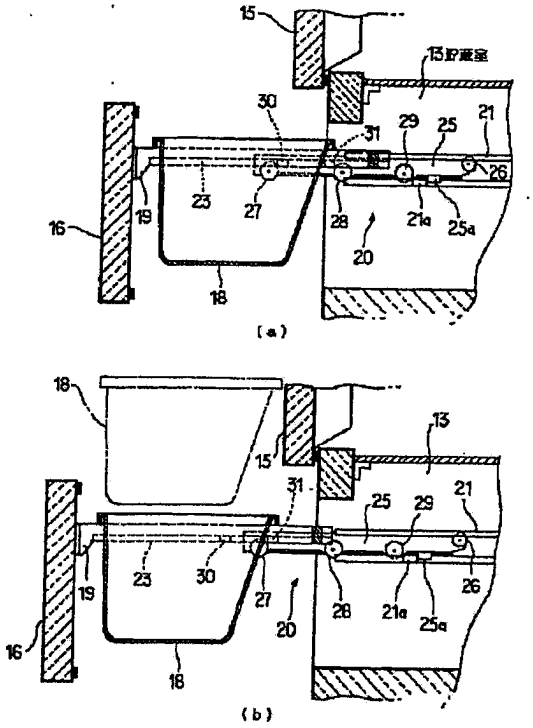

【図５】

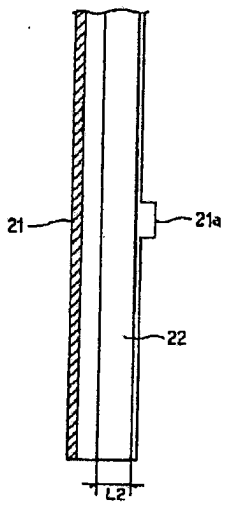

LG0000930

【図６】

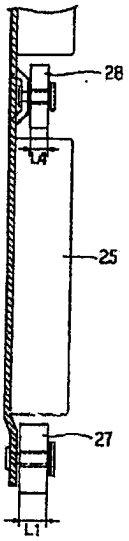

【図７】

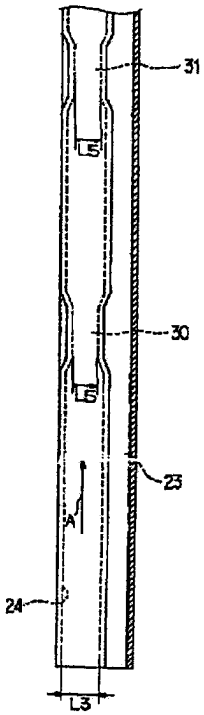

【図８】

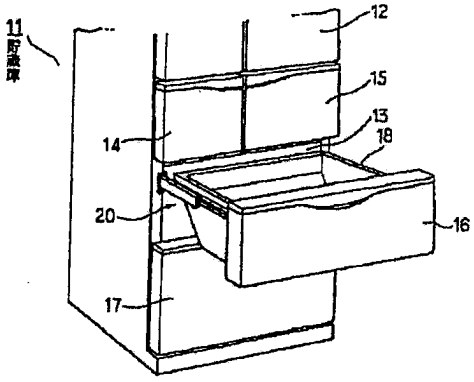

LG0000931

【図9】

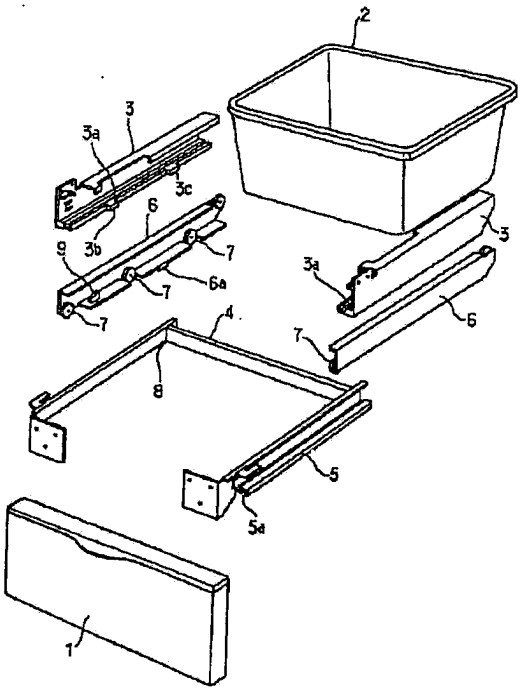

LG0000932

EXHIBIT 8

(19)日本国特許庁（ＪＰ）　(12)公開特許公報（Ａ）　(11)特許出願公開番号
特開2001－91153
（P2001－91153A）
(43)公開日　平成13年４月６日(2001.4.6)

(51)Int.Cl.'		識別記号	ＦＩ		テーマコード'(参考)	
Ｆ２５Ｄ	29/00		Ｆ２５Ｄ	29/00	Ｂ	３Ｌ０４５
	21/04			21/04	Ｆ	３Ｌ１０２
	23/02	３０６		23/02	３０６Ｚ	

審査請求　未請求　請求項の数１　ＯＬ　（全５頁）

(21)出願番号　特願平11－272085

(22)出願日　平成11年９月27日(1999.9.27)

(71)出願人　000003078
株式会社東芝
神奈川県川崎市幸区堀川町72番地
(72)発明者　中山　晃一
大阪府茨木市太田東芝町１番６号　東芝エー・ブイ・イー株式会社大阪事業所内
(74)代理人　100071135
弁理士　佐藤　強

Ｆターム(参考)　3L045 AA05 AA07 BA01 CA02 DA02
EA01 GA07 HA01 PA04
3L102 JA01 KA01 KB18 KD10

(54)【発明の名称】　冷蔵庫

(57)【要約】
【課題】　扉スイッチ部分が氷結することを防止でき、扉スイッチが機能不良となることを防止する。
【解決手段】　冷凍室２８の内箱２３に取り付けられるレール板３５に、扉スイッチ３０を覆うスイッチカバー部３６を一体に設ける。内箱２３の外側面に配置される金属製の補強板３７に、防露パイプ４０に嵌合するパイプ接触部３８と、内箱２３を貫通してスイッチカバー部３６の内面に接触するカバー接触部３９を一体に設ける。防露パイプ４０の熱を補強板３７を介して扉スイッチ３０部分に伝えるようにすることにより、扉スイッチ３０の操作子３０ａ部分が氷結することを防止する。

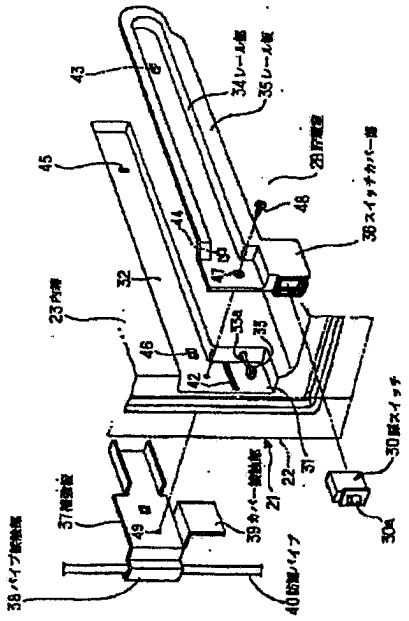

LG0000939

LG0000939

【特許請求の範囲】

【請求項１】　貯蔵室の前面開口部の縁部に、当該前面開口部を開閉する引出し式の扉に応動する扉スイッチを備えた冷蔵庫において、

前記貯蔵室の内箱の内側面に設けられ、前記扉の前後方向へのスライド移動をガイドするレール部を有するレール板と、

前記貯蔵室の内箱の外側面に配置され、前記レール板と共に前記内箱に取付固定される金属製の補強板と、

前記貯蔵室の前面開口部の縁部に配設された防露パイプとを備え、

前記レール板に、前記扉スイッチを覆うスイッチカバー部を一体に設けると共に、

前記補強板に、前記防露パイプと接触するパイプ接触部と、前記内箱を貫通して前記スイッチカバー部に接触するカバー接触部とを一体に設けたことを特徴とする冷蔵庫。

【発明の詳細な説明】

【０００１】

【発明の属する技術分野】本発明は、貯蔵室の前面開口部の縁部に、当該前面開口部を開閉する引出し式の扉に応動する扉スイッチを備えた冷蔵庫に関する。

【０００２】

【発明が解決しようとする課題】この種の冷蔵庫の従来構成の一例を図５に示す。この図５において、冷蔵庫本体１の貯蔵室のうち最下部の貯蔵室は冷凍室２とされ、この冷凍室２の前面開口部を開閉する扉（図示せず）は引出し式とされている。冷凍室２の内箱３には、冷凍室２の前面開口部の縁部に位置させてスイッチ用凹部４が形成され、このスイッチ用凹部４に、扉スイッチ５が配設されるようになっている。扉スイッチ５を覆うスイッチカバー６は、例えばプラスチック製で、ピン６ａとボス部６ｂとが突設されていて、そのうちのピン６ａを、内箱３に形成された孔４ａに挿入すると共に、内箱３の外側（発泡断熱材側）からねじ７を前記ボス部６ｂにねじ込むことにより内箱３に取り付ける構成となっている。扉スイッチ５は、スイッチ用凹部４内に設けられたコネクタ８に接続される。

【０００３】なお、内箱３の上記スイッチ用凹部４の上方には後方へ延びるレール用凹部９が形成されていて、内箱３の内側面には、このレール用凹部９を覆うようにレール板１０が配置されている。このレール板１０は、裏側に突設された第１及び第２の凸部１０ａ，１０ｂを内箱３のレール用凹部９に形成された孔９ａ，９ｂに挿入して仮止めし、ねじ挿通孔１０ｃを挿通した皿ねじ１１を、内箱３の外側面（発泡断熱材側）に配置された金属製の補強板１２のねじ孔１２ａにねじ込むことにより、内箱３に取り付けられている。

【０００４】ところで、上記した従来構成において、扉の開閉に応動する扉スイッチ５の操作子５ａ部分はマイナス温度（氷点下）であり、例えば使用者が水やジュース等を扉スイッチ５部分にこぼし、それが氷結した場合、扉スイッチ５の機能が不良となってしまうおそれがあった。

【０００５】本発明は上記した事情に鑑みてなされたものであり、その目的は、扉スイッチ部分が氷結することを防止でき、扉スイッチが機能不良となることを防止できる冷蔵庫を提供することにある。

【０００６】

【課題を解決するための手段】上記の目的を達成するために、本発明は、貯蔵室の前面開口部の縁部に、当該前面開口部を開閉する引出し式の扉に応動する扉スイッチを備えた冷蔵庫において、前記貯蔵室の内箱の内側面に設けられ、前記扉の前後方向へのスライド移動をガイドするレール部を有するレール板と、前記貯蔵室の内箱の外側面に配置され、前記レール板と共に前記内箱に取付固定される金属製の補強板と、前記貯蔵室の前面開口部の縁部に配設された防露パイプとを備え、前記レール板に、前記扉スイッチを覆うスイッチカバー部を一体に設けると共に、前記補強板に、前記防露パイプと接触するパイプ接触部と、前記内箱を貫通して前記スイッチカバー部に接触するカバー接触部とを一体に設けたことを特徴とするものである。

【０００７】このものによれば、防露パイプの熱が金属製の補強板を介してスイッチカバー部に伝えられることにより、扉スイッチ部分が氷点下になることを防止でき、これにより、扉スイッチ部分が氷結することを防止できるようになる。

【０００８】

【発明の実施の形態】以下、本発明の一実施例について図１ないし図４を参照して説明する。まず、冷蔵庫の全体の外観を示す図４において、冷蔵庫本体２１は、鋼板製の外箱２２と合成樹脂製の内箱２３との間に発泡断熱材（図示せず）を充填した周知構造の断熱箱体として構成されている。この冷蔵庫本体２１には、貯蔵室として、冷蔵室２４、野菜室２５、製氷室２６、内部温度を複数段階に切替可能な切替室２７、冷凍室２８が上から順に設けられている（但し、製氷室２６及び切替室２７は左右に並んだ状態とされている）。尚、上記切替室２７は、その内部温度の切替に応じて、冷凍室、チルド室、冷蔵室、野菜室などの多様な態様で使用されるという周知構成のものである。

【０００９】上記冷蔵室２４の前面にはヒンジ開閉式の扉２４ａが設けられ、野菜室２５、製氷室２６、切替室２７及び冷凍室２８の各前面には、それぞれ貯蔵容器を備えた引出式の扉２５ａ、２６ａ、２７ａ及び２８ａが前後方向にスライド可能に設けられている。

【００１０】ここで、上記貯蔵室のうち、最下部の冷凍室２８の扉スイッチ３０部分の構造について、図１ないし図３を参照して説明する。冷凍室２８において、内箱

LG0000940

２３の左側壁には、スイッチ用凹部３１が形成されていると共に、このスイッチ用凹部３１の上方に位置させてレール用凹部３２が形成されている。スイッチ用凹部３１には、扉スイッチ３０を接続するためのコネクタ３３が設けられている。内箱２３の内側面（冷凍室２８側の面）には、後方へ延びるレール部３４を有する例えばプラスチック製のレール板３５が配置されており、このレール板３５の前部の下部に、扉スイッチ３０を覆うスイッチカバー部３６が一体に設けられている。

【００１１】内箱２３の左側壁の外側面（発泡断熱材側）には、金属製の補強板３７が配置されている。この補強板３７には、前部に断面がコ字形をなすパイプ接触部３８が一体に設けられていると共に、前部の下部に逆Ｌ字形をなすカバー接触部３９が一体に設けられている。このうちのパイプ接触部３８を、冷蔵庫本体２１の左側壁の内部（冷凍室２８の前面開口部の縁部）に配置される防露パイプ４０に嵌合させ、アルミテープ４１（図２参照）で止めるようにしている。また、カバー接触部３９は、内箱２３に形成された開口部４２を通して内箱２３を貫通し、スイッチカバー部３６の内面に接触させるようにしている（図３参照）。

【００１２】そして、上記レール板３５は、裏側に突設された第１及び第２の凸部４３，４４を内箱２３のレール用凹部３２に形成された孔４５，４６に挿入して仮止めし、ねじ挿通孔４７を挿通した皿ねじ４８を、内箱２３の外側面（発泡断熱材側）に配置された補強板３７のねじ孔４９にねじ込むことにより、内箱２３に取り付けられている。また、上記扉スイッチ３０は、図３に示すように、上記コネクタ３３に接続した状態で、スイッチカバー部３６の内側において上記カバー接触部３９と内箱２３との間に配置され、前部の操作子３０ａがスイッチカバー部３６から前方へ突出するようになっている。なお、内箱２３と外箱２２との間には、図示はしないが発泡ウレタンからなる発泡断熱材が充填されるようになっている。この発泡断熱材は、上記した扉スイッチ３０、レール板３５及び補強板３７を内箱２３に組み付けた状態で発泡充填される。

【００１３】上記構成において、冷凍室２８の扉２８ａが閉鎖されると、その扉２８ａの縁部により扉スイッチ３０の操作子３０ａが押圧されて扉スイッチ３０としてはオフ状態となり、扉２８ａが開放されると、扉スイッチ３０の操作子３０ａに対する押圧が解除されることに伴い操作子３０ａが前方に突出し、これに伴い扉スイッチ３０はオン状態となる。

【００１４】ここで、金属製の補強板３７のパイプ接触部３８を防露パイプ４０に嵌合させると共に、カバー接触部３９をスイッチカバー部３６に接触させるようにしているので、防露パイプ４０の熱が補強板３７を介してスイッチカバー部３６に伝えられることにより、扉スイッチ３０部分が氷点下になることを防止できる。これにより、扉スイッチ３０部分に水やジュースなどがかかったとしても、その扉スイッチ３０の操作子３０ａ部分が氷結することを防止でき、扉スイッチ３０が機能不良となることを防止できるようになる。

【００１５】また、上記した実施例によれば、カバー接触部３９によりスイッチカバー部３６を補強できるので、発泡断熱材の発泡圧によりスイッチカバー部３６が変形することも防止できる。さらに、スイッチカバー部３６はレール板３５に一体に設けられているので、スイッチカバー部３６には、従来のスイッチカバー６のように、スイッチカバー６取り付けのためのピン６ａやボス部６ｂを設ける必要がない。このため、スイッチカバー部３６を取り付ける際に、そのスイッチカバー部３６と内箱２３との間でコネクタ３３やそのリード線３３ａを挟み込んでしまうことがなく、取付作業性を向上できる。ちなみに、従来では、スイッチカバー６を内箱３に取り付ける際に、スイッチカバー６のピン６ａやボス部６ｂと内箱３との間でコネクタ８やそのリード線を挟み込んでしまうおそれがあった。

【００１６】しかも、スイッチカバー部３６は、レール板３５を内箱２３に取り付けることで同時に内箱２３に取り付けられるため、従来必要としていた別部品のスイッチカバー６や、これを内箱３に取り付けるための専用のねじ７を不要にでき、その分部品点数を少なくできると共に、組立工数を削減でき、ひいてはコストを低減できるようになる。

【００１７】なお、上記した実施例では、冷凍室２８用の扉スイッチ３０部分について適用した場合を例示したが、これに限られず、本発明は、氷結のおそれのある製氷室２６や切替室２７の扉スイッチ部分にも適用できる。

【００１８】

【発明の効果】以上の説明から明らかなように、本発明によれば、貯蔵室の前面開口部の縁部に、当該前面開口部を開閉する引出し式の扉に応動する扉スイッチを備えたものにおいて、扉スイッチ部分が氷結することを防止でき、扉スイッチが機能不良となることを防止でき、また、スイッチカバーを別部品として必要とせず、コストを低減できるなどの効果を奏する。

【図面の簡単な説明】

【図１】本発明の一実施例を示す要部の分解斜視図

【図２】要部の横断平面図

【図３】図２とは異なる部分での要部の横断平面図

【図４】冷蔵庫全体の外観斜視図

【図５】従来例を示す図１相当図

【符号の説明】

２１は冷蔵庫本体、２２は外箱、２３は内箱、２８は冷凍室（貯蔵室）、２８ａは扉、３０は扉スイッチ、３３はコネクタ、３４はレール部、３５はレール板、３６はスイッチカバー部、３７は補強板、３８はパイプ接触

LG0000941

部、３９はカバー接触部、４０は防露パイプを示す。

【図１】

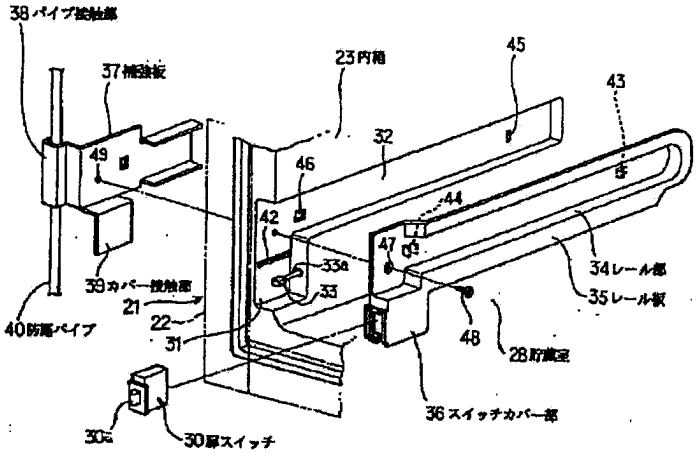

【図２】

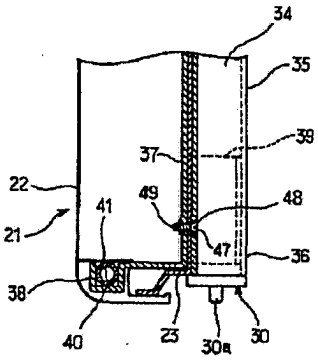

【図３】

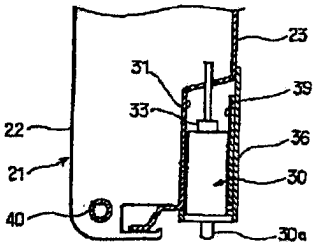

【図４】

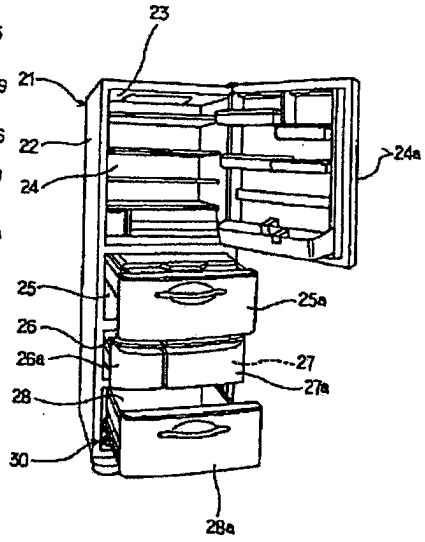

LG0000942

LG0000942

【図５】

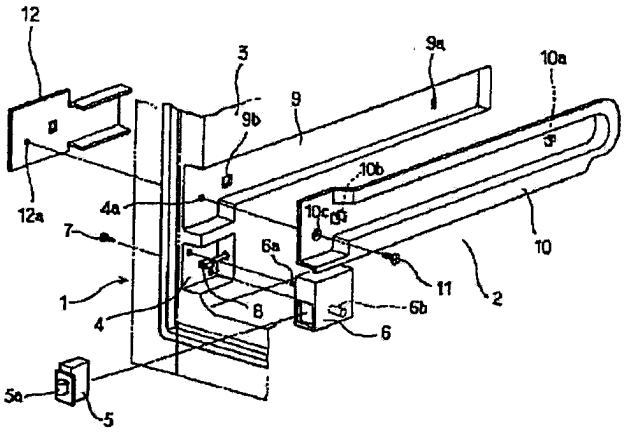

LG0000943

EXHIBIT 9

(19)日本国特許庁（ＪＰ）　(12) 公開実用新案公報（Ｕ）　(11)実用新案出願公開番号

実開平8－1438

(43)公開日　平成８年(1996)10月１日

(51)Int.Cl.⁶	識別記号	庁内整理番号	ＦＩ		技術表示箇所
Ｂ６２Ｄ　21/09			Ｂ６２Ｄ　21/09	Ｚ	
Ｆ１６Ｊ　15/02			Ｆ１６Ｊ　15/02		

審査請求　有　請求項の数４　ＦＤ　（全　２　頁）

(21)出願番号　実願平5－61102

(22)出願日　平成５年(1993)10月20日

(71)出願人　390039723
株式会社パプコ
神奈川県海老名市柏ヶ谷456番地
(72)考案者　西尾　肇
神奈川県海老名市柏ヶ谷456番地　株式会社パプコ内
(74)代理人　弁理士　竹内　澄夫　(外２名)

(54)【考案の名称】　トラックのシャシとその上の架装物との間に装着されるパッキン

(57)【要約】

【目的】　トラックのシャシが、その上に配置される荷箱により撓むことにより荷箱が歪むことを防止する、シャシと荷箱との間に装着されるパッキンを提供する。

【構成】　本考案のパッキン（２０）は、断面がほぼ矩形であり、長手方向にテーパーが付けられいる。連結可能にするために一端に切り込み（２４）、他端に突出部２５が形成される。下面（２２）には、シャシ上の突起を収納可能な凹所（２３）を有する。

【効果】　本考案のパッキンは、テーパーがつけられているため、シャシの端部で大きくなる撓みに対応させることができ、また、荷箱の荷重を面で支えるため荷重が分散し、そのためパッキンは変形することない。さらに、連結可能であることから、シャシの長さに対応させることができ、したがって、荷箱の荷重をシャシ全体に伝えることができる。

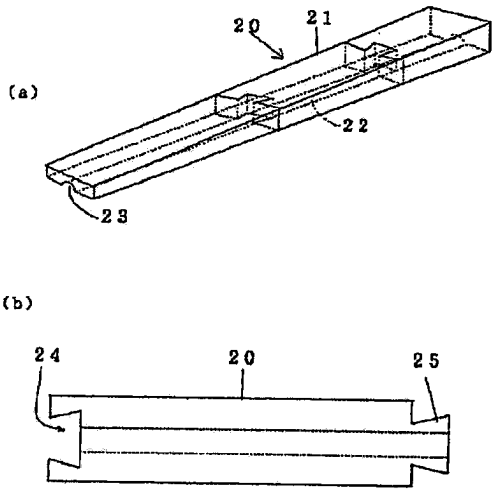

LG0000933

LG0000933

【実用新案登録請求の範囲】

【請求項１】　運転台と、その後部に延設されるシャシと、そのシャシ上に取り付けられる架装物とを有するトラックにおいて、架装物とシャシとの間に配置されるパッキンであって、
前記パッキンは、断面がほぼ矩形であり、長手方向に高さが次第に変わるテーパーが付けられいることを特徴とするパッキン。

【請求項２】　請求項１に記載のパッキンであって、前記パッキンの長さが、シャシの撓みの生じる所付近からシャシの後端までの長さであることを特徴とするパッキン。

【請求項３】　請求項１に記載のパッキンであって、前記シャシ上の突起を収容できる、凹部が前記パッキンの裏面に形成されることを特徴とするパッキン。

【請求項４】　請求項１に記載のパッキンであって、前記パッキンの長手方向の一端に突出部が形成され、他端に前記突出部と同形の切り込み部が形成され、一つのパッキンの突出部と他のパッキンの切り込み部とを嵌合させることで、パッキンの長さを任意に決定できることを特徴とするパッキン。

【図面の簡単な説明】

【図１】トラックのシャシが荷箱の荷重のために撓み、それにより荷箱が歪んだ状態を示す。

【図２】シャシに荷箱を取り付ける前のトラックの斜視図を示す。

【図３】トラックのシャシの撓みを調節するための従来のパッキンの斜視図を示す。

【図４】図４（ａ）は、複数個連結した本考案のパッキンの斜視図を示し、図４（ｂ）は一つの本考案のパッキンの平面図を示す。

【図５】本考案のパッキンを、トラックのシャシと荷箱との間に装着配置した、トラックの後部を示す。

【符号の説明】

２０　パッキン
２１　上面
２２　下面
２３　凹所
２４　切り込み
２５　突出部

【図１】

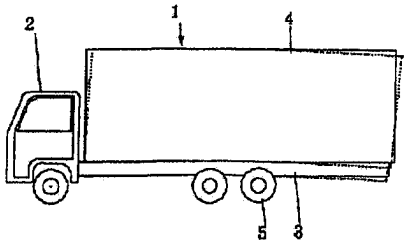

【図２】

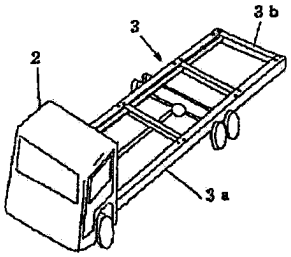

【図３】

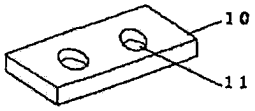

【図４】

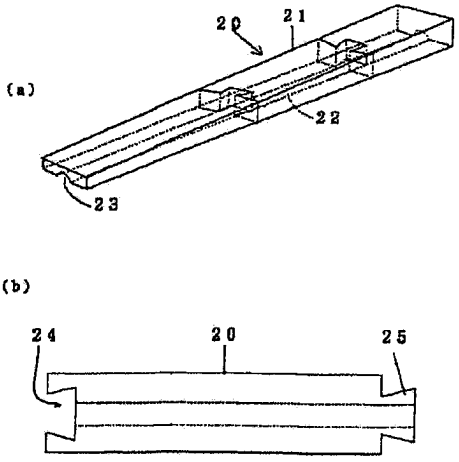

【図５】

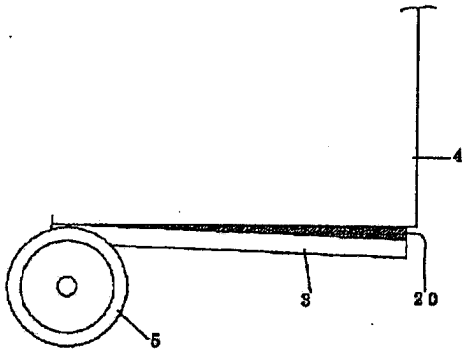

LG0000934

LG0000934

【考案の詳細な説明】

【０００１】

【産業上の利用分野】

本考案は、トラックのシャシとその上に配置される架装物との間に装着されるパッキンに関する。

【０００２　【従来技術】

貨物を運搬するためのトラック１は、図１に示すように、運転台２から後方に伸びるシャシ３上に、荷物を収納するための荷箱４が取り付けられる。トラックの後輪５は、トラックが大型になればなるほど、シャシ３の後端より前方に位置し、荷箱４の重量を支持する。

【０００３】

また、図２に示すように、シャシ３は縦部材３ａと横部材３ｂとから成り、両部材はボルト等の締め付け具により連結される場合が多い。そのためシャシの上にはボルトの頭部が突き出ている。

【０００４】

このようなシャシ３上に荷箱４を配置すると、その荷箱の重量で、図１に破線で示すように、シャシ３が撓む。その上の荷箱４が撓みにしたがって歪む。荷箱４には後方、側方に開閉扉が設けられているが、この歪みのためにその開閉が不十分となっていた。また、荷箱の耐久性が短くなった。さらに、シャシの上のボルトの頭部は荷箱の取り付けの邪魔となる。

【０００５】

そのため、従来は、図３に示すように、シャシ３と荷箱４の横根太との間にスペーサーとして木製あるいは樹脂製のパッキン１０が取り付けられていた。このパッキンはほぼ直方体で、シャシ３上のボルト等の頭部を収納する穴１１が形成されている。

【０００６】

【考案が解決しようとする課題】

しかし、シャシ３の撓みは、図１に示すように、後方にいくにしたがって大きくなり、従来の一定の高さのパッキンでは、撓み大きいところでは何枚かのパッ

LG0000935

キンを積み重ねる必要があるが、その合計の高さが撓み分と必ずしも一致するとは限らない。したがって、いろいろな高さのパッキンを常時用意しておかなければならない。

【０００７】

また、従来の直方体のパッキンでは、撓みが後方にいくほどおおきくなることから、パッキンの上面および下面全体に均等に荷重がかかるのではなく、撓みの少ない側に大きな荷重がかかる。そのため、パッキンが変形しやすく、パッキンの耐用年数が短くなった。

【０００８】

そこで、本考案の目的は、シャシの撓みの大きさに即したパッキンを提供することである。

【０００９】

本考案の他の目的は、荷箱の荷重が均等にかかるパッキンを提供することである。

【００１０】

さらに、本考案の他の目的は、複数のパッキンを任意に連結できるパッキンを提供することである。

【００１１】

【課題を解決するための手段】

上記目的を達成する本考案のパッキンは、運転台とその後部に延設されるシャシとそのシャシ上に取り付けられる架装物とを有するトラックにおいて、架装物の重みによりシャシが撓むことにより、架装物が歪むことを防止するための、架装物とシャシとの間に配置されるパッキンであって、断面がほぼ矩形であり、長手方向に高さが次第に変わるテーパーが付けられていることを特徴とする。

【００１２】

シャシ上のボルト等の頭部などの突起があるときは、これを収容できる凹部が前記パッキンの裏面に形成されることが望ましい。

【００１３】

パッキンは、その長手方向の一端に突出部を形成し、他端に前記突出部と同形

LG0000936

の切り込み部を形成することで、複数のパッキンを連結でき、その長さを任意になものとすることができる。

【００１４】

【作用】

本考案のパッキンは長手方向にテーパーが付けられているため、シャシの撓みがどのようなものであっても、パッキンを便宜配置することで、撓みに対応でき、さらに、取り付けられる荷箱の荷重を上面および下面全体で支持でき、荷重が分散される。

【００１５】

また、本考案のパッキンを適宜連結することで、撓みが生じるシャシ全体に配置できる。

【００１６】

【実施例】

図４（ａ）に３つが連結された本考案のパッキンの斜視図が示され、図４（ｂ）に一つのパッキンの平面図が示されている。パッキン２０は、一方から他方に長手方向に向かって徐々に高さが高くなるようにテーパーが付けれ、その断面はほぼ矩形となっている。パッキン２０の上面２１および下面２２は、それぞれ荷箱の底面（実際は横根太を介して）およびシャシの上面と接するために平坦となっている。このパッキンは荷箱の荷重に耐え得る材料から作られ、たとえば木、樹脂が好適である。

【００１７】

パッキン２０の下面２２には、シャシ上に突き出るボルトの頭部などの突起を収納できるように、長手方向に伸びる蒲鉾状の凹所２３が設けられている。長手方向に伸びる凹所としたのはパッキン２０をシャシ上で任意に移動配置できるようにするためである。したがって、パッキンの取り付け位置が固定されている場合は、凹所は長手方向に伸びる必要はなく、ドーム状あるいは円筒状の凹所でもよい。なお、このような突起がシャシ上にないときは、このような凹所を設ける必要はない。

【００１８】

LG0000937

LG0000937

図４（ｂ）は、一つのパッキン２０の平面図である。このパッキン２０は、長手方向に容易な連結を可能にするために、一端に台形の切り込み２４が形成され、他端に切り込み２４と同形の台形の突出部２５が形成されている。したがって、図４（ａ）に示すように、シャシの長さ、撓みの大きさに即してパッキンを適宜連結することできる。この実施例では、切り込み、突出部は台形であるが、これらは、連結のためのものであるから、この目的を達成できればこれに限定されず、たとえば矩形や半円形であってもよい。

【００１９】

図４のパッキンは数個のパッキンを連結した実施例を示したが、シャシの長さ、撓みの大きさが既知の場合は、長さ、テーパーの程度を最初から設定した一体のパッキンであってもよい。

【００２０】

図５は、シャシ３と荷箱４との間にパッキンを装着した状態を示す。パッキンは、シャシに撓みが生じるところからシャシの後端まで、すなわちシャシに取り付けられる荷箱の中央からシャシの後端もしくはシャシに組付けられる後輪付近からシャシの後端までの間に装着される。このようにパッキンを装着することで、荷箱４は水平に配置され、歪むことがない。図では、荷箱に対するパッキンを例示したが、荷箱に限らず、一般にシャシを撓ませる架装物に対して適用できる。

【００２１】

【考案の効果】

本考案のパッキンは、テーパーがつけられているため、シャシの端部で大きくなる撓みに対応させることができる。

【００２２】

また、荷箱の荷重を面で支えるため荷重が分散し、そのためパッキンは変形することなくしたがって、パッキンの耐用年数が著しく伸びる。さらに、本考案のパッキンは連結可能であることから、シャシの長さに対応させることができ、したがって、荷箱の荷重をシャシ全体に伝えることができる。

LG0000938

LG0000938

EXHIBIT 10

(19) Europäisches Patentamt
European Patent Office
Office européen des brevets

(11) EP 0 656 182 B1

(12) EUROPEAN PATENT SPECIFICATION

(45) Date of publication and mention of the grant of the patent:
16.06.1999 Bulletin 1999/24

(51) Int. Cl.[6]: **A47B 88/10**, F25D 23/00

(21) Application number: 94308976.3

(22) Date of filing: **02.12.1994**

(54) Drawer mechanism, particularly for a refrigerator

Schubladenauszug, insbesondere für einen Kühlschrank

Dispositif de guidage pour tiroir, en particulier pour réfrigérateurs

(84) Designated Contracting States:
DE FR GB IT

(30) Priority: 02.12.1993 KR 2624693

(43) Date of publication of application:
07.06.1995 Bulletin 1995/23

(73) Proprietor: GOLDSTAR CO. LTD.
Seoul (KR)

(72) Inventor: Do, Gab Bu
Busan-si (KR)

(74) Representative:
Gibbs, Christopher Stephen
Haseltine Lake & Co.
Imperial House
15-19 Kingsway
London WC2B 6UD (GB)

(56) References cited:
AT-B- 394 132
CH-A- 665 472
US-A- 2 496 573
US-A- 2 801 146

Note: Within nine months from the publication of the mention of the grant of the European patent, any person may give notice to the European Patent Office of opposition to the European patent granted. Notice of opposition shall be filed in a written reasoned statement. It shall not be deemed to have been filed until the opposition fee has been paid. (Art. 99(1) European Patent Convention).

Printed by Xerox (UK) Business Services
2.16.7/3.6

EP 0 656 182 B1

LG0000874

Description

[0001] The present invention relates generally to a device for opening and/or closing a drawer such as a vegetable box of a refrigerator.

[0002] Generally, a vegetable box 6 is formed in the lower part of the main body 1a of a conventional refrigerator, as shown in Figs. 1 and 2. A user may open and close the vegetable box 6 using a door 3a of the vegetable compartment in the manner of a drawer.

[0003] When the user pushes the door 3a of the vegetable compartment into the main body 1a of the refrigerator, an attraction is produced between a magnetic material attached to a door gasket (not shown) and an iron plate. Accordingly, the door 3a of the vegetable compartment is attached to the main body 1a of the refrigerator, so that the heat insulation is maintained between the magnetic material attached to the door gasket and the iron plate. A magnetic seal is shown, for instance, in CH-A-665472.

[0004] However, the magnetic force of the door gasket tends to weaken after a long period of use, so that the door 3a of the vegetable compartment is no longer satisfactory sealed to the main body 1a of the refrigerator. This means that cool air leaks outside the main body 1a of the refrigerator. As a result, the conventional refrigerator has the disadvantages of a loss of power in the refrigerator and a drop in efficiency.

[0005] The object of the present invention is to overcome the problems and disadvantages of the conventional device, that is, to provide a mechanism for opening and closing a vegetable box of a refrigerator to or from which a user can easily place or get food such as vegetables and fruit without the seal being subject to deterioration over time.

[0006] According to the invention there is provided a drawer mechanism for enabling a drawer to slide into and out of a cabinet, comprising: guide rails to be fixed to wall surfaces of the cabinet to guide movement of the drawer; sliders having rollers adapted to move along the guide rails; and drawer support members on both sides of the drawer and moving forward and rearward along with the sliders as the drawer is opened or closed; wherein the guide rails, sliders, rollers and support members are so arranged that in the closed configuration of the drawer the weight of the drawer acts constantly to exert a force maintaining this closed configuration, by virtue of the device including on the one hand upward projections of the guide rails at their front ends and the rollers on the front of the sliders, and on the other hand an upwardly projecting portion and a slanting surface at the front end of the movement surface of each support member, corresponding to the projections of the guide rails, in such a way that in the closed position the weight of the drawer is transmitted obliquely from the slanting surface of the support member through the roller to slanting surfaces of the upward projections (2a) of the guide rails, thus exerting a closing force on the drawer as aforesaid.

[0007] US-A-2496673 (Nielsen) discloses a drawer construction, not intended for a refrigerator, with rollers and sloping surfaces, but the sloping surfaces are separate and are associated with separate rollers.

[0008] In embodiments of the invention the mechanism includes a vegetable box formed in the lower part of the main body of the refrigerator for receiving food like vegetables and fruit, guide rails fixed to wall surfaces in the lower parts of the main body of the refrigerator to guide movement of the vegetable box, sliders inserted into the guide rails and having a plurality of rollers, supporting members mounted in both sides of the vegetable box and moving straight forward and rearward along with the sliders by rotating the rollers when the vegetable box opened or closed, and a gravitational locking means for uniting the supporting members with the guide rails by the weight of the vegetable box itself when the supporting members and the vegetable box are completely inserted into the lower part of the main body of the refrigerator.

[0009] By the provision of gravitational closing means including the sloping guide surfaces on the drawer supports, sliders and guide rails it is ensured that the weight of the drawer and/or the sliders will always act to keep the drawer shut, and clearly this weight is not subject to weakening with time in the same way as a magnetic strip. Each slider preferably has a roller at its front end which in the closed position of the drawer, as defined by a sealing gasket being pressed around the drawer opening in the cabinet, is situated between the slopes of the guide surfaces to provide the necessary inward closing force component.

[0010] For a better understanding of the invention an embodiment will now be described by way of example with reference to the accompanying drawings, in which:

Fig. 1 is a perspective view of a conventional refrigerator;
Fig. 2 is a longitudinal sectional view of a portion "A" in Fig. 1;
Fig. 3 is an exploded perspective view of the relevant parts of a refrigerator according to a preferred embodiment of the present invention;
Fig. 4 is a sectional view showing the parts in Fig. 2 as assembled;
Fig. 5a is a longitudinal sectional view showing the parts with the drawer closed; and
Fig. 5b is a corresponding longitudinal sectional view with the drawer open.

[0011] Referring to Fig. 3, guide rails 2 are formed at both wall surfaces of an inner case in the lower part of the main body 1 of the refrigerator, for guiding a drawer for use as a vegetable compartment, for instance. The rails have raised sections or upper projections 2a formed at their forward ends.

[0012] Sliders 5 moving forward and rearward when

LG0000875

the door or panel 3 of the drawer is pulled or pushed are mounted on the guide rails 2. The sliders 5 have a plurality of rollers 4.

[0013] Support members 7 constituted as arms of a U-shaped frame are united with the door 3 of the vegetable compartment, and a vegetable box 6 is mounted in the supporting members 7. The supporting members 7 are moved along with (or roll on) the sliders 5 by a frictional force of the rollers 4 when the door 3 of the vegetable compartment is pulled or pushed, a downward-facing guide groove 8 being formed in each supporting member 7 for contact to the upper surfaces of the rollers.

[0014] Stops 9, for pushing the sliders 5 as the door 3 of the vegetable compartment is closed, are formed in the forward upper end portion of each supporting member 7, and slant surfaces 7a corresponding to the upper projections 2a of the guide rails 2 are formed in each forward lower end portion of the supporting members 7, thus giving the grooves 8 a ceiling near their front ends which first slopes and then runs horizontally at a higher level up to the door 3.

[0015] A gravitational locking means is constituted by the upper projections 2a raised above the rest of the guide rails 2 at the front and the rollers 4 formed at the front of the sliders 5 and operating against the slant surfaces of the upper projections 2a under gravity when the vegetable box 6 is substantially completely inserted into the lower part of the refrigerator.

[0016] The operation of the present invention described above will be explained as follows.

[0017] Referring to Fig. 5a, when a user wants to open the door 3 of the vegetable compartment in the lower part of the main body in the refrigerator, he pulls the door 3 in the direction of the arrow. The rollers 4 of the sliders 5 are in this closed position pressed between the slanting part of the upper projections 2a of the guide rails 2 and the slant surfaces 7a in the forward lower end portions of the guide grooves 8 of the supporting members 7. This configuration ensures a force component in the closure direction resulting from the weight of the drawer. When the drawer is opened the rollers move forward by the friction force, sliding over the upper projections 2a formed in each forward end portion of the guide rails 2.

[0018] Referring to Fig. 5b, when the supports 7 move along with the sliders 5 and the rollers 4 off the front of the guide rails 2 out of the main body 1 of the refrigerator, the door 3 of the vegetable compartment united with the supporting members 7 sags down under the weight of the vegetable box itself, so that the user can easily get food into or out of the vegetable box 6. It will be seen that the sliders are shown fully extended with the drawer supports 7 in Fig. 5, but they can also be arranged to roll with these supports, so that the sliders would extend only half as far as the drawer.

[0019] When the user pushes the door 3 of the vegetable compartment closed the supporting members 7 move to the right and at the same time the stops 9 formed in each forward upper end portion of the supporting members 7 push the sliders 5.

[0020] When the rollers 4 of the supporting members 7 slide over the upper projections 2a of the guide rails 2, the supporting members 7 and the door 3 of the vegetable compartment are generally and completely pressed against the main body 1 of the refrigerator, slightly raised upwards as shown in Fig. 5a, in such a way that leakage of cool air is prevented; a polymeric seal 10 can be used between the door and the cabinet.

[0021] As described above, the refrigerator according to the above embodiment has the advantage that the user can easily get the food such as vegetables or fruit into or out of the vegetable box 6 since the door 3 of the vegetable compartment sags down slightly when pulled, after the front rollers drop off the end of the guide rails.

[0022] In addition, leakage of the cool air can be prevented because the door 3 of the vegetable compartment is completely attached to the main body 1 of the refrigerator by the weight of the vegetable box itself. As a result, the efficiency and reliability of the product is considerably heightened.

Claims

1. A drawer mechanism for enabling a drawer to slide into and out of a cabinet, comprising:

guide rails (2) to be fixed to wall surfaces of the cabinet to guide movement of the drawer;
sliders (5) adapted to move along the guide rails, each having near its front end a roller (4) running on the respective guide rail (2); and
drawer support members (7) on both sides of the drawer and moving forward and rearward along with the sliders as the drawer is opened or closed;
wherein the guide rails (2), sliders (5) and support members (7) include gravitational locking means (2a, 4, 7a) such that in the closed configuration of the drawer the weight of the drawer acts constantly to exert a force maintaining this closed configuration;
characterised in that the gravitational locking means includes on the one hand upward projections (2a) of the guide rails (2) at their front ends and the rollers (4) on the front of the sliders, and on the other hand an upwardly projecting portion and a slanting surface (7a) at the front end of the movement surface of each support member (7), corresponding to the projections (2a) of the guide rails, in such a way that in the closed position the weight of the drawer is transmitted obliquely from the slanting surface of the support member (7) through the roller (4) to slanting surfaces of the upward projections (2a) of the guide rails (2), thus exerting

LG0000876

a closing force on the drawer as aforesaid.

2. A mechanism according to claim 1, in which the drawer has a front panel (3) which in the closed position abuts against the cabinet via a seal (10), and in which the supporting members (7) in the upper part of their forward ends have stops (9) for pushing the sliders (5) inwards when the drawer is closed.

3. A refrigerator cabinet including a drawer mounted on a mechanism as claimed in any preceding claim.

Patentansprüche

1. Schublade-Vorrichtung zum Ermöglichen, daß eine Schublade in ein Gehäuse hinein oder aus dem Gehäuse heraus gleiten kann, wobei die Vorrichtung aufweist:

Führungsschienen (2), die an Wandoberflächen des Gehäuses befestigt sind, um eine Bewegung der Schublade zu führen;
Schlitten (5), die ausgelegt sind, sich entlang den Führungsschienen zu bewegen, wobei jeder an seinem Vorderende eine Rolle (4) hat, die auf der jeweiligen Führungsschiene (2) läuft; und
Schublade-Tragteile (7) an beiden Seiten der Schublade, die sich zusammen mit den Schlitten vorwärts und rückwärts bewegen, wenn die Schublade geöffnet oder geschlossen wird;
wobei die Führungsschienen (2), die Schlitten (5) und die Tragteile (7) eine Schwerkraft-Sperreinrichtung (2a, 4, 7a) derart haben, daß in der geschlossenen Konfiguration der Schublade das Gewicht der Schublade ständig wirkt, um eine Kraft auszuüben, die diese geschlossene Konfiguration aufrechterhält;
dadurch gekennzeichnet, daß die Schwerkraft-Sperreinrichtung auf der einen Seite nach oben gerichtete Vorsprünge (2a) der Führungsschienen (2) an ihren Vorderenden und die Rollen (4) an der Vorderseite der Schlitten und auf der anderen Seite einen nach oben hervorstehenden Abschnitt und eine schräge Oberfläche (7a) am Vorderende der Bewegungsoberfläche jedes Tragteils (7) entsprechend den Vorsprüngen (2a) der Führungsschienen derart aufweist, daß in der geschlossenen Position das Gewicht der Schublade schräg von der schrägen Oberfläche des Stützteils (7) über die Rolle (4) auf die schrägen Oberflächen der nach oben gerichteten Vorsprünge (2a) der Führungsschienen (2) umgesetzt wird, damit eine Schließkraft auf die Schublade, wie zuvor angegeben, einwirkt.

2. Vorrichtung gemaß Anspruch 1, in der die Schublade eine Frontplatte (3) hat, die in der geschlossenen Position an das Gehäuse über eine Dichtung (10) anstößt, und in der die Tragteile (7) in dem oberen Teil ihrer vorderenden Anschläge (9) zum Schieben der Schlitten (5) nach innen haben, wenn die Schublade geschlossen wird.

3. Kühlschrank-Gehäuse, das eine Schublade enthält, die an einer Vorrichtung, beansprucht in einem der vorhergehenden Ansprüche, angebracht ist.

Revendications

1. Mécanisme pour tiroir permettant à un tiroir de pénétrer et de sortir d'un compartiment par glissement, comprenant:

des rails de guidage (2) destinés à être fixés à des surfaces de parois du compartiment pour guider le mouvement du tiroir;
des coulisseaux (5) conçus pour se déplacer le long des rails de guidage, chacun comportant, à proximité de son extrémité frontale, un galet (4) se déplaçant sur le rail de guidage respectif (2); et
des éléments de support de tiroir (7) de part et d'autre du tiroir et effectuant un déplacement vers l'avant et vers l'arrière conjointement avec les coulisseaux lorsqu'on ouvre ou lorsqu'on ferme le tiroir;
dans lequel les rails de guidage (2), les coulisseaux (5) et les éléments de support (7) englobent des moyens de verrouillage par gravitation (2a, 4, 7a) de telle sorte que, dans la configuration fermée du tiroir, le poids du tiroir exerce de manière constante une force qui maintient cette configuration fermée;
caractérisé en ce que les moyens de verrouillage par gravitation englobent, d'une part, des saillies dressées (2a) des rails de guidage (2) à leurs extrémités frontales et les galets (4) à l'avant des coulisseaux, et d'autre part, une portion faisant saillie vers le haut et une surface inclinée (7a) à l'extrémité frontale de la surface de mouvement de chaque élément de support (7), correspondant aux saillies (2a) des rails de guidage, de telle sorte que, dans la position fermée, le poids du tiroir est transmis en oblique depuis la surface inclinée de l'élément de support (7) vie les galets (4) aux surfaces inclinées des saillies dressées (2a) des rails de guidage (2) en exerçant ainsi une force de fermeture sur le tiroir, comme indiqué ci-dessus.

2. Mécanisme selon la revendication 1, dans lequel le tiroir possède un panneau frontal (3) qui, dans la

LG0000877

LG0000877

position fermée, vient buter contre le compartiment via un joint d'étanchéité (10) et dans lequel les éléments de support (7), dans la partie supérieure de leurs extrémités avant, possèdent des arrêts (9) pour pousser les coulisseaux (5) vers l'intérieur lorsque le tiroir est fermé.

3. Compartiment de réfrigérateur englobant un tiroir monté sur un mécanisme tel que revendiqué dans l'une quelconque des revendications précédentes.

LG0000878

LG0000878

FIG. 1

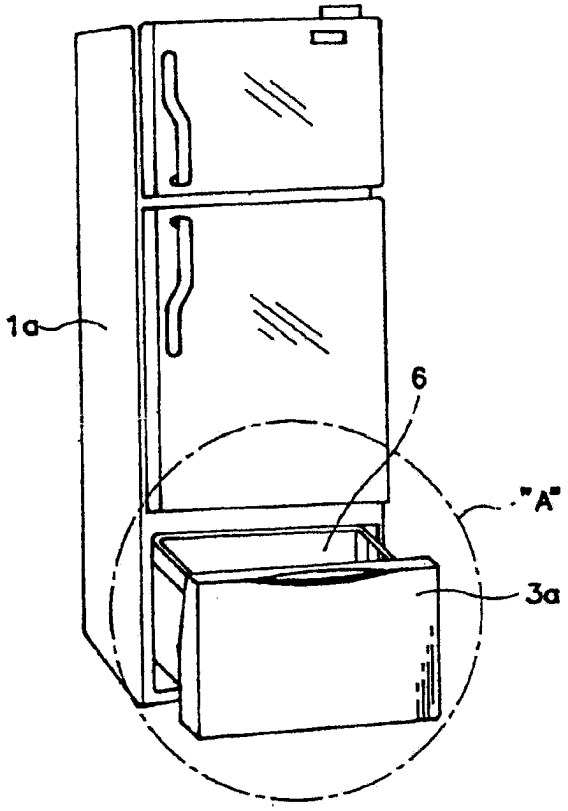

FIG. 2

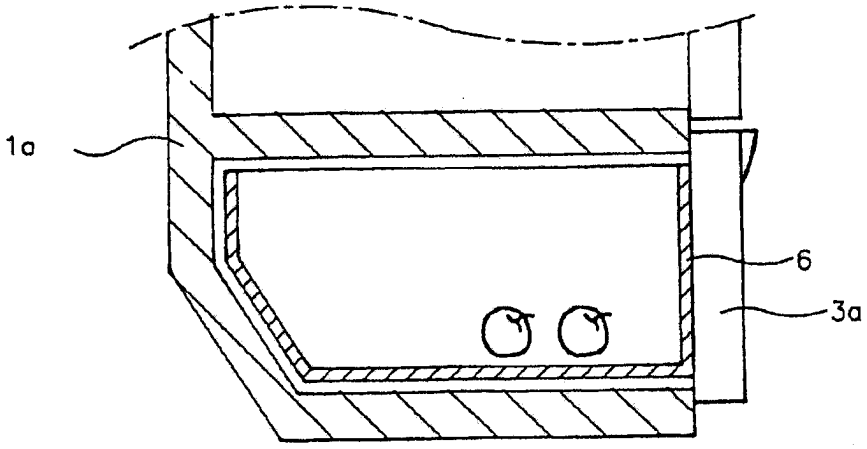

LG0000879

FIG.3

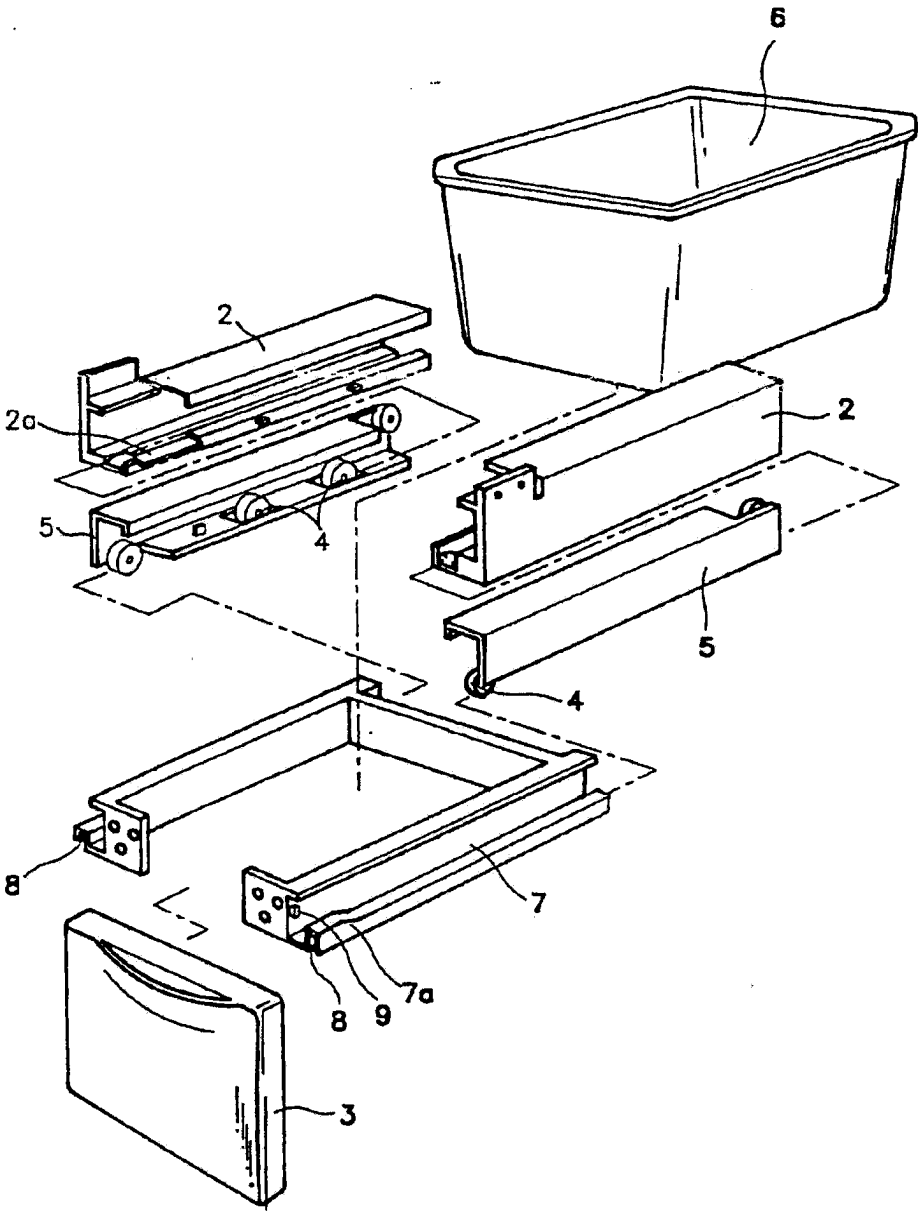

LG0000880

FIG.4

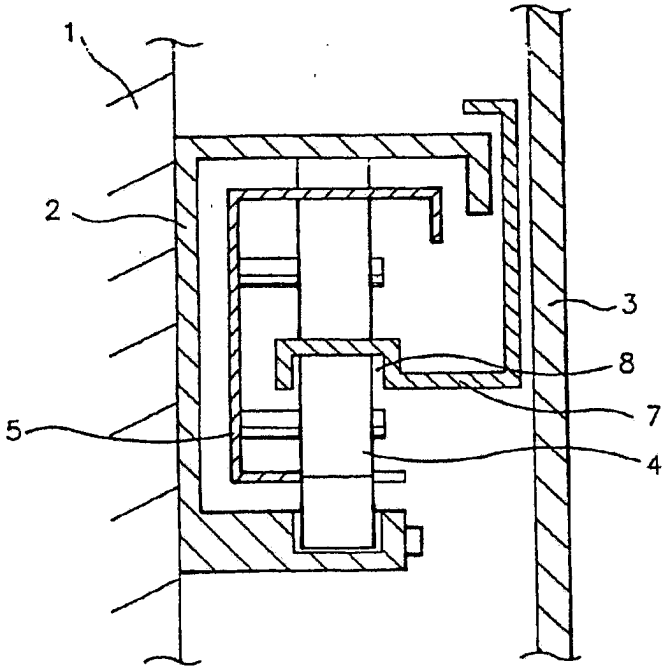

LG0000881

FIG.5a

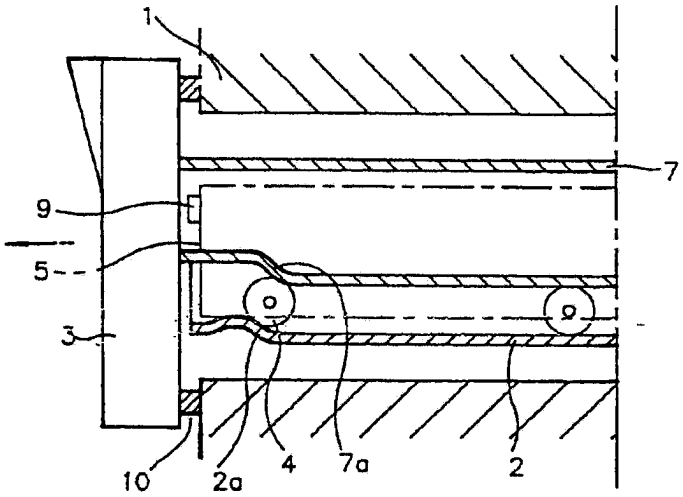

FIG.5b

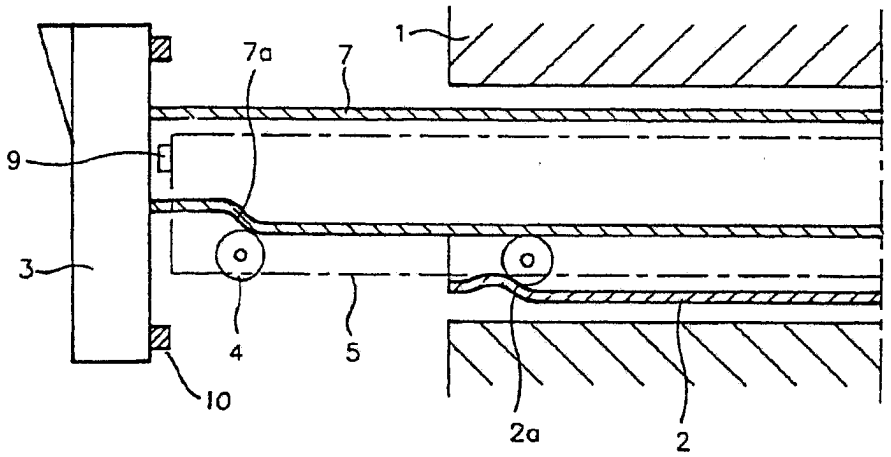

LG0000882

LG0000882

EXHIBIT 11

(19) BUNDESREPUBLIK DEUTSCHLAND

DEUTSCHES PATENTAMT

(12) **Offenlegungsschrift**

(11) **DE 3505757 A1**

(51) Int. Cl.⁴: F25D 25/00

(21) Aktenzeichen: P 35 05 757.2
(22) Anmeldetag: 20. 2. 85
(43) Offenlegungstag: 29. 8. 85

DE 3505757 A1

(30) Unionspriorität: (32) (33) (31)
23.02.84 CH 889/84-8

(71) Anmelder:
Koch AG, Appenzell, CH

(74) Vertreter:
Riebling, G., Dipl.-Ing. Dr.-Ing.; Riebling, P., Dipl.-Ing. Dr.-Ing., Pat.-Anw., 8990 Lindau

(72) Erfinder:
Mösch, Helmut, Appenzell, CH

(54) Schubladen-Einbausatz für Kühlschränke

Der Schubladen-Einbausatz für den Kühlschrank (1), dessen Innenraum durch zargenförmige Seitenwände (2) begrenzt ist, umfaßt einen zum Einschieben in die Verzargung (3) der inneren Seitenwände (2) des Kühlschrankes (1) bestimmten Grundrahmen (4), dessen seitliche Begrenzungen der lichten Weite der inneren Seitenwände (2) entspricht und der ein paralleles Führungsschienenpaar (5, 6) zur führenden Aufnahme einer Schublade bzw. eines Schubtablars (7) trägt.
Diese Maßnahmen erlauben ein ortsfestes Einsetzen eines Grundrahmens in beliebiger Höhe und dann die Betätigung einer exakt und in gewohnter Weise zwischen dem parallelen Führungsschienenpaar geführten Schublade unbekümmert der Konizität des Innenraumes, wobei das Umsetzen der Anordnung jederzeit und ohne Werkzeug möglich ist.

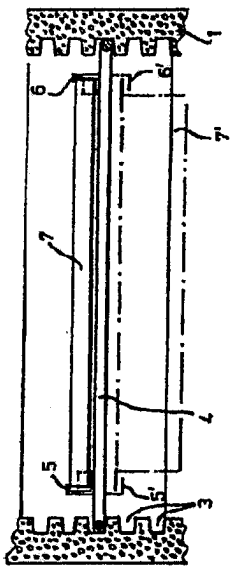

DE 3505757 A1

BUNDESDRUCKEREI 07. 85 508 035/602 5/60

LG0000864

3505757

Patentansprüche

1. Schubladen-Einbausatz für Kühlschränke, deren Innenraum durch zargenförmige Seitenwände begrenzt ist, gekennzeichnet durch einen zum Einschieben in die Verzargung (3) der inneren Seitenwände (2) des Kühlschrankes (1) bestimmten Grundrahmen (4), dessen seitliche Begrenzungen der lichten Weite der inneren Seitenwände (2) entspricht und der ein paralleles Führungsschienenpaar (5,6) zur führenden Aufnahme einer Schublade bzw. eines Schubtablars (7) trägt.

2. Schubladen-Einbausatz nach Anspruch 1, dadurch gekennzeichnet, dass der Grundrahmen (4) in eingesetztem Zustand verschiebungsfest fixierbar ist.

3. Schubladen-Einbausatz nach Anspruch 2, dadurch gekennzeichnet, dass der Grundrahmen (4) durch Schrauben (8) an den inneren Seitenwänden (2) des Kühlschrankes (1) feststellbar ist.

4. Schubladen-Einbausatz nach Anspruch 1, dadurch gekennzeichnet, dass sich das parallele Führungsschienenpaar (5,6) auf der Oberseite des Grundrahmens (4) befindet.

5. Schubladen-Einbausatz nach Anspruch 1, dadurch gekennzeichnet, dass sich das parallele Führungsschienen-

LG0000865

paar (5',6') auf der Unterseite des Grundrahmens (4) befindet und der Aufnahme einer Hängeschublade (7') dient.

6. Schubladen-Einbausatz nach Anspruch 5, dadurch gekennzeichnet, dass der Grundrahmen (4) als Tablar ausgebildet ist.

LG0000866

3505757

Einreichungsfertig zur
Weiterleitung erhalten
Patentanwälte
Dr.-Ing. G. Riebling
Dr.-Ing. P. Riebling

. 3.

Koch AG

Appenzell/Schweiz

Schubladen-Einbausatz für
Kühlschränke

83210

LG0000867

3505757

Koch AG Appenzell/Schweiz

Schubladen - Einbausatz für Kühlschränke

Die vorliegende Erfindung betrifft einen Schubladen-Einbausatz für Kühlschränke.

Bekannterweise sind Kühlschränke für den privaten und den professionellen Gebrauch innen mit einem sogenannten Zargenbottich ausgekleidet, der den eigentlichen Kühlraum begrenzt und in dem sich in der Regel rostförmige Tablare praktisch stufenlos höhenverstellbar in den Zargen der Seitenwände abstützen. Kühlschränke dieser Art weisen zudem oft noch eine Schublade auf, die aber lediglich führungslos auf dem Boden des Kühlraumes aufsitzt. Schubladen einfach mit seitlich abragenden Schienen in die Zargen einschiebbar auszugestalten, ist in der Regel nicht möglich, da sich der aus einem Kunststoff, etwa Polystyrol, gegossene Innenraum bzw. Zargenbottich gegen seine Rückwand hin konisch verjüngt. Eine teilweise gezogene Schublade würde demnach bezüglich der lichten Weite aus der Führung der Zargen gelangen und durchfallen.

Dem gegenüber besteht aber der Wunsch, den Innenraum von

LG0000868

Kühlschränken über die bisher einzige individuelle Möglichkeit der praktisch stufenlosen Versetzung der vorhandenen Tablare hinaus durch den Einsatz von Schubladen an möglichst beliebiger Stelle weiter auszugestalten.

Es ist deshalb Aufgabe der vorliegenden Erfindung, einen hierfür geeigneten Schubladen-Einbausatz zu schaffen.

Ein solcher erfindungsgemässer Schubladen-Einbausatz zeichnet sich aus durch einen zum Einschieben in die Verzargung der inneren Seitenwände des Kühlschrankes bestimmten Grundrahmen, dessen seitliche Begrenzungen der lichten Weite der inneren Seitenwände entspricht und der ein paralleles Führungsschienenpaar zur führenden Aufnahme einer Schublade bzw. eines Schubtablars trägt.

Diese Massnahmen erlauben nun ein ortsfestes Einsetzen eines Grundrahmens in beliebiger Höhe und dann die Betätigung einer exakt und in gewohnter Weise zwischen dem parallelen Führungsschienenpaar geführten Schublade unbekümmert der Konizität des Innenraumes, wobei das Umsetzen der Anordnung jederzeit und ohne Werkzeug möglich ist.

Eine solche Schubladenführung kann dabei von üblicher Konstruktion sein, von der einfachsten Parallelführung bis hin zum Vollauszug.

LG0000869

Vorzugsweise besteht dabei eine zweckmässige Ausgestaltung darin, den Grundrahmen in eingesetztem Zustand verschiebungsfest zu fixieren, was durch Schrauben, beispielsweise Rändelkopf-Schrauben erfolgen kann, mit denen der Grundrahmen an den inneren Seitenwänden des Kühlschrankes feststellbar ist.

Innerhalb dieser erfindungsgemässen Vorkehrungen ist es nun möglich, das parallele Führungsschienenpaar auf der Oberseite des Grundrahmens oder auf dessen Unterseite anzuordnen, so dass sowohl Aufsatzschubladen wie auch Hängeschubladen verwendet werden können. Bei letzterem kann dann der Grundrahmen zusätzlich als Tablar dienen.

Beispielsweise Ausführungsformen des Erfindungsgegenstandes sind nachfolgend anhand der Zeichnung näher erläutert. Es zeigen:

Fig. 1 einen Ausschnitt eines Kühlschrankes im Vertikalschnitt mit dem erfindungsgemässen Schubladen-Einbausatz mit einer Aufsatzschublade bzw. mit einer Hängeschublade; und

Fig. 2 einen Querschnitt des Kühlschrankes mit dem Schubladen-Einbausatz gemäss Fig. 1 in Draufsicht.

Der in den Fig. 1 und 2 veranschaulichte Schubladen-Einbau-

LG0000870

satz ist für Kühlschränke 1 geeignet, deren Innenraum durch zargenförmige Seitenwände 2 begrenzt ist. Kühlschränke dieser Art sind bekannt und umfassen eine um ein Scharnier 14 aufschwenkbare Fronttüre 11 mit einem Türgriff 13. Fig. 2 lässt ferner einen rückseitigen Teil 12 des Kühlsystems erkennen. Weiter zeigt Fig. 2, dass der eigentliche Kühlraum 15 des Kühlschranks 1 durch einen sogenannten Zargenbottich gebildet ist, an dessen Seitenwände 2 gemäss Fig. 1 eine Vielzahl Zargen 3 angegossen sind, die eine praktisch stufenlose Verstellbarkeit von Tablaren oder dgl. in der Höhe zulassen. Fig. 2 zeigt ferner deutlich, dass sich der Kühlraum 15 gegen seine Rückwand 16 hin konisch verjüngt, was einer direkten Schubladenführung in den Zargen 3 entgegensteht.

Demzufolge ist erfindungsgemäss ein zum Einschieben in die Verzargung 3 der inneren Seitenwände 2 des Kühlschrankes 1 bestimmter Grundrahmen 4 vorgesehen, dessen seitliche Begrenzungen der lichten, konisch verlaufenden Weite der inneren Seitenwände 2 entspricht, wie Fig. 2 deutlich zeigt.

Dieser Grundrahmen 4 ist hier gegen ein unerwünschtes Verschieben durch vorzugsweise handbetätigbare Rändelkopf-Schrauben 8 (Fig. 2) an den inneren Seitenwänden 2 des Kühlschrankes 1 feststellbar, was ein Versetzen des Grundrahmens 4 in der Höhe ohne Werkzeug jederzeit gewährleistet.

Wie nun insbesondere Fig. 1 erkennen lässt, trägt der Grund-

LG0000871

rahmen 4 auf seiner Oberseite ein paralleles Führungsschienenpaar 5,6 zur schiebbaren Aufnahme einer Schublade bzw. eines Schubtablars 7.

Wie bereits erwähnt, kann hierbei ein einfacher Auszug oder ein selbstsperrender Vollauszug u. dgl. vorgesehen sein.

In jedem Falle aber ist auf die vorbeschriebene Weise ein Schubladen-Einbausatz geschaffen, der allen funktionellen Erfordernissen entspricht und eine freie Innenraumgestaltung des Kühlschrankes gewährleistet.

Wie in Fig. 1 durch die strichpunktierten Linien angedeutet, kann das Führungsschienenpaar 5',6' auch auf der Unterseite des Grundrahmens 4 angeordnet sein und der Aufnahme einer Hängeschublade 7' dienen. Bei einer solchen Anordnung kann dann der Grundrahmen 4 als Tablar ausgestaltet sein.

Gegebenenfalls kann der Grundrahmen 4 aber auch gleichzeitig das obere Führungsschienenpaar 5,6 für die Schublade 7 und das untere Führungsschienenpaar 5',6' für die Hängeschublade 7' aufweisen.

LG0000872

Nummer: 35 06 757
Int. Cl.³: F 25 D 25/00
Anmeldetag: 20. Februar 1985
Offenlegungstag: 29. August 1985

FIG.1

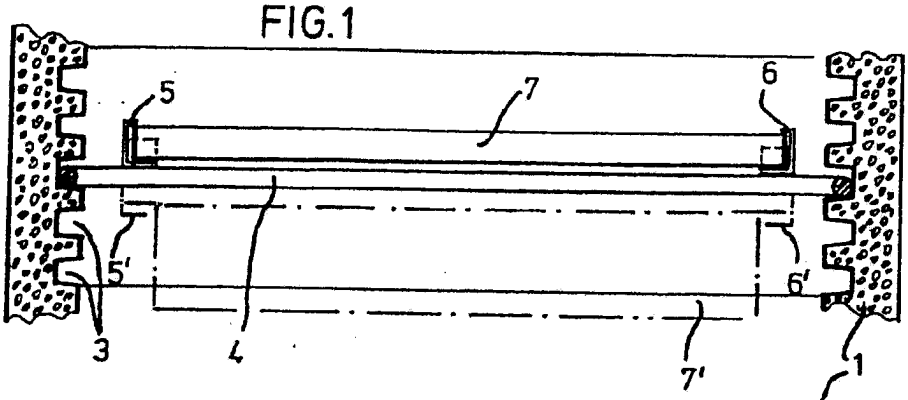

FIG. 2

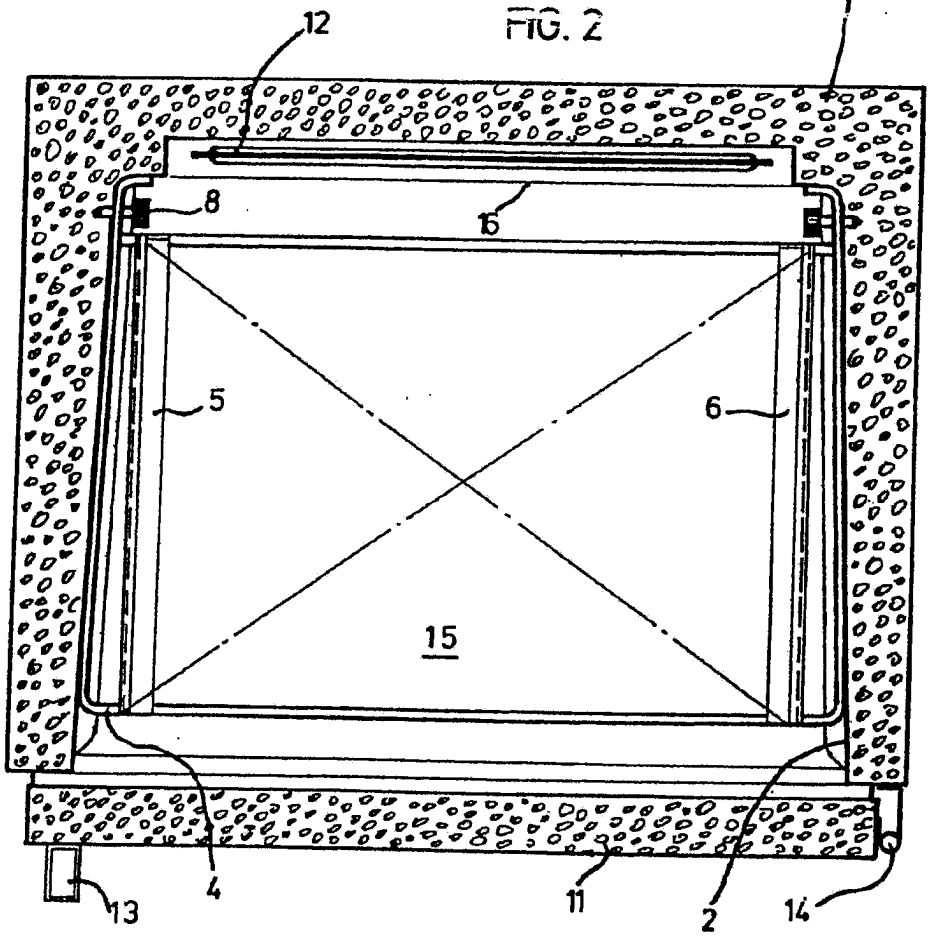

LG0000873

EXHIBIT B

Part 4

EXHIBIT 12

(19) BUNDESREPUBLIK DEUTSCHLAND

DEUTSCHES PATENT- UND MARKENAMT

(12) **Gebrauchsmuster**

(10) **DE 298 17 743 U 1**

(51) Int. Cl.[6]: F 25 D 23/00

(21) Aktenzeichen: 298 17 743.9
(22) Anmeldetag: 5. 10. 98
(47) Eintragungstag: 17. 12. 98
(43) Bekanntmachung im Patentblatt: 4. 2. 99

(73) Inhaber:
BSH Bosch und Siemens Hausgeräte GmbH, 81669 München, DE

(54) Kühlgerät

DE 298 17 743 U 1

DE 298 17 743 U 1

BUNDESDRUCKEREI 12.98 802 265/382/30A 2

LG0000846

05.10.98

BSH Bosch und Siemens Hausgeräte GmbH

Hochstraße 17
81669 München

05. Oktober 1998
ZTP 98P4038
Tho/hi

Kühlgerät

Die Erfindung betrifft ein Kühlgerät mit einem wärmeisolierenden Gehäuse und wenigstens einem von einer Tür verschließbaren Kühlfach, in welchem wenigstens ein schubladenartiger Behälter angeordnet ist, welcher anhand von an den Seitenwänden des Kühlfaches vorgesehenen Teleskopauszügen aus dem Kühlfach herausziehbar ist, wobei jeder der Teleskopauszüge ein an den Seitenwänden des Kühlfaches festgesetztes Festschienenteil und wenigstens ein daran verschieblich geführtes Losschienenteil aufweist.

Bei einem bekannten Mehrtemperaturenkühlgerät sind in dessen Frischkühlfach schubladenartige Behälter übereinander angeordnet, welche anhand von Teleskop-Rollenauszügen aus dem Kühlfach herausziehbar sind. Die Teleskop-Rollenauszüge sind dabei mit ihrem Festschienenteil an den Seitenwänden des Kühlfaches festgesetzt. Zur Befestigung kommen bei den bekannten Geräten Schraubverbindungen zur Anwendung, wobei je eine in Art einer Blechschraube ausgebildete, mit einem in der Wärmeisolation des Gehäuses fixierten Hinterlegteil zusammenwirkende Befestigungsschraube im Nahbereich der beiden Endabschnitte des Festschienenteils zu dessen Befestigung vorgesehen ist. Eine derartige Befestigungsmaßnahme in gewährt für die Teleskop-Rollenauszüge zwar eine ausreichende Haltekraft, jedoch ist die Durchführung der Befestigungsmaßnahme in einer Großserienfertigung beschwerlich und zeitraubend, da nicht nur das positionsrichtige Fixieren des Festschienenteils zu den vorgefertigten Öffnungen an den Seitenwänden des Kühlfaches, sondern auch das Fügen und Eindrehen der Befestigungsschrauben, insbesondere am türfernen Abschnitt des Festschienenteils sich als schwierig durchzuführender Montageschritt herausgestellt hat.

LG0000847

05.10.98

Der Erfindung liegt die Aufgabe zugrunde, bei einem Kühlgerät gemäß dem Oberbegriff des Anspruches 1 für die darin zum Einsatz kommende Teleskop-Rollenauszüge eine Befestigungsmaßnahme vorzuschlagen, welche nicht nur auf einfache Weise die Nachteile des Standes der Technik vermeidet, sondern zugleich einen gleichmäßig hohen Qualitätsstandard für die Befestigungsmaßnahme sicherstellt.

Diese Aufgabe wird gemäß der Erfindung dadurch gelöst, daß das Festschienenteil zu seiner Befestigung an den Seitenwänden wenigstens zwei im Abstand zueinander angeordnete, mit Aufnahmen an den Seitenwänden formschlüssig zusammenzuwirken vermögende hakenähnlich geformte Haltelaschen aufweist, von denen eine mit ihrem freien Endabschnitt zumindest annähernd in Bewegungsrichtung der Teleskopauszüge zeigt, während die andere Haltelasche mit ihrem freien Endabschnitt zur Aufstellebene des Kühlgerätes gerichtet und durch Haltemittel in ihrer Befestigungsposition gehalten ist.

Die erfindungsgemäße Befestigung der teleskopartig ausziehbaren Tragschienen ist ohne Zuhilfenahme zusätzlicher Werkzeuge, wie beispielsweise einem Schraubendreher oder dergleichen, rasch und positionsgenau für eine Montageperson in bequemer Weise mit geringem Kraftaufwand durchführbar. Gleichzeitig ist durch diese Haltemaßnahme eine langzeitstabile Befestigung des Festschienenteils unter Ausschaltung montagebedingter Positionsunzulänglichkeit bereitgestellt. Desweiteren lassen sich die durch die erfindungsgemäße Haltemaßnahme festgesetzten Teleskopschienenauszüge im Bedarfsfall, beispielsweise zu Reinigungszwecken des Kühlfaches, von einem Endverbraucher auf einfache Weise demontieren und anschließend wieder montieren.

Nach einer bevorzugten Ausführungsform des Gegenstandes der Erfindung ist vorgesehen, daß das Festschienenteil zumindest im Nahbereich der mit ihrem freien Endabschnitt zur Aufstellebene des Kühlgerätes gerichteten Haltelasche ein als Haltemittel dienendes lösbares Fixierelement aufweist, welches die Haltelasche in die Aufnahme zwingt.

Durch eine derartige Zuordnung des Haltemittels ist das Festschienenteil nicht nur in seiner positionsrichtigen Lage, nämlich sowohl in vertikaler als auch in horizontaler Richtung dauerhaft gesichert, sondern durch die lösbare Ausführung zugleich

LG0000848

05.10.98

im Bedarfsfall auf einfache und rasche Weise von den Seitenwänden des Kühlfaches demontierbar.

Nach einer nächsten bevorzugten Ausführungsform des Gegenstandes der Erfindung ist vorgesehen, daß das lösbare Fixierelement als aus seiner Halteposition auslenkbarer, am Festschienenteil lösbar festgesetzter Federbügel ausgebildet ist, welcher eine mit einer Aufnahme an der Seitenwand formschlüssig entgegen der Fügerichtung zusammenwirkende Haltenase aufweist.

Durch die Zuordnung des Fixierelementes zum Festschienenteil ist nicht nur das Zusammenwirken des Fixierelementes mit der Aufnahme und somit eine äußerst wirksame Halterung der Haltelasche auf besonders einfache Weise sichergestellt, sondern zudem die Montage der Teleskopauszüge im Kühlfach deutlich vereinfacht. Der als Halteelement eingesetzte Federbügel ermöglicht außerdem eine Demontage der Teleskopauszüge ohne Zuhilfenahme irgendwelcher Werkzeuge.

Gemäß einer weiteren bevorzugten Ausführungsform des Gegenstandes der Erfindung ist vorgesehen, daß das Festschienenteil an seinem türfernen Abschnitt die mit ihrem freien Endabschnitt in Bewegungsrichtung der Teleskopauszüge zeigende Haltelasche aufweist.

Eine derartige Ausbildung des Festschienenteils ermöglicht eine besonders einfache und zielsichere Fixierung der zur Aufstellebene des Kühlgerätes gerichteten Haltelasche, da diese gut einsehbar am türnahen Ende des Festschienenteils vorgesehen ist.

Entsprechend einer weiteren bevorzugten Ausführungsform des Gegenstandes der Erfindung ist vorgesehen, daß die am türfernen Abschnitt der Teleskopauszüge angeordnete Haltelasche mit ihrem freien Endabschnitt von der Tür weggerichtet ist.

Hierdurch ergibt sich die Möglichkeit, die am türfernen Abschnitt angeordnete Haltelasche in Zuführrichtung des Teleskopauszuges in das Kühlfach in die türferne Aufnahme einbringen zu können, wodurch die Montage der Teleskopauszüge besonders gezielt durchführbar und somit die Montagezeit deutlich verkürzt ist.

LG0000849

05.10.98

Besonders einfach und dennoch tragesteif ausgebildet sind die Aufnahmen, wenn nach einer nächsten vorteilhaften Ausgestaltung des Gegenstandes der Erfindung vorgesehen ist, daß die Aufnahmen an den Seitenwänden durch daran vorgesehene, zumindest weitestgehend eigensteife gurtartige Halteelemente gebildet sind.

Nach einer weiteren bevorzugten Ausführungsform des Gegenstandes der Erfindung ist vorgesehen, daß die gurtartigen Halteelemente wärmeisolationsseitig an den Seitenwänden des Kühlfaches festgesetzt und über Durchbrüche in den Seitenwänden zugänglich sind.

Durch die verdeckte unauffällige Anordnung der Halteelemente wärmeisolationsseitig, können diese, ohne den Kühlraum störend zu beeinflussen, bedarfsgemäß, entsprechend der auftretenden Belastung gestaltet werden. Darüber hinaus ergibt sich durch eine derartige Anordnung der Halteelemente eine zumindest weitestgehend ebenflächige, leicht zu pflegende Oberfläche für die Seitenwände des Kühlfaches.

Entsprechend einer nächsten vorteilhaften Ausgestaltung des Gegenstandes der Erfindung ist vorgesehen, daß die gurtartigen Halteelemente jeweils an den Endbereichen einer aus Blech gebildeten Verstärkungsschiene vorgesehen sind.

Auf diese Weise ausgeführte Halteelemente lassen sich aufgrund ihrer festen Zuordnung zu der Verstärkungsschiene im Fertigungsablauf zu den Durchbrüchen in den Seitenwänden durch die Fixierung eines einzigen Bauteils besonders positionsgenau anordnen. Darüber hinaus sind die Halteelemente werkstoffbedingt auf einfache Weise besonders tragesteif ausbildbar.

Besonders tragesteif und zugleich besonders sicher im Wärmeisolationsmaterial verankerbar ist die Verstärkungsschiene, wenn nach einer nächsten vorteilhaften Ausgestaltung des Gegenstandes der Erfindung vorgesehen ist, daß die Verstärkungsschiene wenigstens eine in seine Längsrichtung sich erstreckende und zumindest annähernd an seine beiden Endbereiche herangeführte Verstärkungsrippe aufweist, welche in das Wärmeisolationsmaterial eingebettet ist.

Besonders kostengünstig mit engen Toleranzen herstellbar sind die Aufnahmen an der Verstärkungsschiene, wenn nach einer nächsten vorteilhaften Weiterbildung des Gegenstandes der Erfindung vorgesehen ist, daß die Halteelemente an der

LG0000850

05.10.98

Verstärkungsschiene durch Aussparungen freigeschnittene gurtartige Haltestege ausgeführt sind mit welchen die Haltelaschen in Eingriff sind.

Besonders unauffällig, ohne die Beschickung des Kühlfaches zu beeinträchtigen, sind die Verstärkungsschienen an den Seitenwänden des Kühlfaches festgesetzt, wenn nach einer nächsten vorteilhaften Ausführungsform des Gegenstandes der Erfindung vorgesehen ist, daß die Verstärkungsschienen an ihren Endbereichen mit wenigstens zwei wärmeisolationsseitig angeordneten Befestigungsteilen an den Seitenwänden des Kühlfaches festgesetzt sind.

Besonders einfach mit wenigen Handgriffen lagestabil festsetzbar sind die Verstärkungsschienen, wenn nach einer weiteren bevorzugten Ausführungsform des Gegenstandes der Erfindung vorgesehen ist, daß die Befestigungsteile wenigstens zwei zumindest annähernd einander gegenüberliegende Befestigungshaken aufweisen, welche die Verstärkungsschiene in Öffnungen zu durchdringen vermögen, und in Art eines Bajonettverschlusses mit den Rändern der Durchbrüche an den Seitenwänden in Eingriff bringbar sind.

Auf besonders einfache dennoch sichere Weise wird ein Eintritt des in flüssigen Ausgangskomponenten zur Anwendung kommenden Wärmeisolationsmaterials in das Kühlfach verhindert, wenn nach einer nächsten vorteilhaften Weiterbildung des Gegenstandes der Erfindung vorgesehen ist, daß die Befestigungsteile zumindest in ihrer Befestigungsposition sowohl die Aussparungen als auch die Öffnungen wenigstens flüssigkeitsdicht abdecken.

Entsprechend einer weiteren bevorzugten Ausführungsform des Gegenstandes der Erfindung ist vorgesehen, daß die Befestigungsteile haubenartig ausgebildet sind, innerhalb deren freien, mit einer Dichtlippe versehenen Haubenränder die Aussparungen und die Öffnungen der Verstärkungsschiene liegen.

Einerseits ist durch die haubenartige Gestaltung der Befestigungsteile sichergestellt, daß die durch die Aussparungen freigeschnittenen gurtartigen Haltestege zur Montage der Haltelaschen gut zugänglich sind. Andererseits ist durch die am freien Haubenrand vorgesehene Dichtlippe durch deren linienförmige Anlage an der Verstärkungsschiene eine funktionssichere Abdichtung um die Aussparungen bzw.

LG0000851

Öffnungen erreicht, selbst dann, wenn am Dichtungspartner, nämlich der Verstärkungsschiene fertigungsbedingt irgendwelche Unebenheiten auftreten.

Besonders sicher herbeigeführt ist die Anlage der Dichtlippe an der Verstärkungsschiene, wenn nach einer nächsten vorteilhaften Ausgestaltung des Gegenstandes der Erfindung vorgesehen ist, daß die Dichtlippe unter Vorspannung an der wärmeisolationsseitigen Oberfläche der Verstärkungsschiene anliegt.

Besonders mühelos ohne Zuhilfenahme eines Hilfswerkzeuges in ihre Befestigungsposition bringbar sind die Befestigungsteile, wenn nach einer nächsten bevorzugten Ausführungsform des Gegenstandes der Erfindung vorgesehen ist, daß die Befestigungsteile eine Handhabe aufweisen, mit Hilfe welcher sie in ihre Befestigungsposition bringbar sind.

Gemäß einer letzten bevorzugten Ausführungsform des Gegenstandes der Erfindung ist vorgesehen, daß zwischen der Verstärkungsschiene und der Seitenwand ein als Zwischenlage ausgebildetes Dichtelement angeordnet ist, welches die Verstärkungsschiene gegen den Durchbruch in der Seitenwand abdichtet.

Durch den Einsatz der Zwischenlage ist ein Eintritt des in flüssigen Ausgangskomponenten verarbeiteten Wärmeisolationsmaterial in das Kühlfach stets sicher verhindert, ohne dabei aufwendige Abdichtmaßnahmen vorsehen zu müssen.

Die Erfindung ist in der nachfolgenden Beschreibung anhand eines in der beigefügten Zeichnung vereinfacht dargestellten Ausführungsbeispieles erläutert.

Es zeigen:

Fig. 1 einen Mehrtemperaturenkühlgerät mit in seinem unteren Abschnitt angeordnetem Frischkühlfach, an dessen Seitenwänden Teleskopschienenauszüge zur verschieblichen Führung von schubladenartigen Behältern vorgesehen sind, in Schnittdarstellung von der Seite,

LG0000852

05.10.98

Fig. 2 ausschnittsweise eine der Seitenwände mit dem daran gehalterten Teleskopschienenauszug, in Vorderansicht gemäß der Schnittlinie II-II,

Fig. 3 ausschnittsweise eine Seitenwand mit dem daran gehalterten Teleskopschienenauszug, gemäß der Schnittlinie III-III,

Fig. 4 einer der Teleskopschienenauszüge in auseinandergezogener Darstellung, mit einer zu seiner Halterung an der Seitenwand dienenden, wärmeisolationsseitig angeordneten Verstärkungsschiene, in Seitenansicht und

Fig. 5 ausschnittsweise die Seitenwand in ihrer Seitenansicht, von der Wärmeisolationsseite her.

Fig. 1 zeigt ein Mehrtemperaturenkühlgerät 10 mit einem wärmeisolierenden Gehäuse 11, welches in seinem unteren, der Aufstellebene des Gerätes 10 zugewandten Abschnitt ein von einer Tür 12 verschließbares Kühlfach 13 aufnimmt. Dieses ist mit einer Innenverkleidung 14 ausgekleidet, welche an ihren Seitenwänden 15 mit in Abständen übereinander angeordneten, höhengleich an beiden Seitenwänden 15 einander gegenüberliegende stufenartige Vorsprünge 16 aufweisen. Innerhalb der stufenartigen Vorsprünge 16, in deren türnahen und deren türfernen Bereich sind die Seitenwände 15 mit einem Durchbruch 17 versehen. Die Vorsprünge 16 sind auf ihrer der Wärmeisolation zugewandten Außenseite mit einer für Verbesserung ihrer statischen Eigenschaften dienenden Verstärkungsschiene 18 hinterlegt, deren Länge so bemessen ist, daß sie sich über die horizontal voneinander beabstandeten Durchbrüche 17 hinweg erstreckt. Diese weisen nasenähnlich vorspringende Randabschnitte 17.1 und zurückspringende Randabschnitte 17.2 auf.

Wie insbesondere aus Fig. 4 hervorgeht, weist die Verstärkungsschiene 18 einen wohl zu ihrer Versteifung als auch zu ihrer Verankerung innerhalb der durch Aufschäumen erzeugten Wärmeisolation dienenden, in die Wärmeisolation gerichteten Versteifungssteg 19 auf, welcher an der der Aufstellebene des Kühlgerätes 10 zugewandten unteren Längsseite der Verstärkungsschiene 18 vorgesehen ist und welcher sich bis in den Nahbereich ihrer Endbereiche 20 erstreckt. Die Endbereiche

LG0000853

20 sind mit anhand von Aussparungen 21 freigeschnittenen, als Halteelemente 22 dienenden gurtartigen Haltestegen ausgestattet, von welchen sowohl der innerhalb des im Nahbereich der Tür 12 angeordneten Endbereiches 20 vorgesehene Haltesteg als auch der im türfernen Endbereich 20 angeordnete Haltesteg im wesentlichen U-profilartig ausgeführt ist. Der türnahe Haltesteg mit seinen U-Profilschenkeln von der Aufstellebene des Kühlgerätes 10 weggerichtet ist, während der türferne Haltesteg mit seinen U-Profilschenkeln zur Tür 12 gerichtet ist. Neben den Haltestegen sind innerhalb der Endbereiche 20 Öffnungen 23 vorgesehen, welche im Abstand ober- bzw. unterhalb der Haltestege in die Verstärkungsschiene 18 eingebracht sind. Zur Befestigung der Verstärkungsschienen 18 an den Seitenwänden 15 sind einteilig aus Kunststoffspritzguß hergestellte Befestigungsteile 24 vorgesehen, welche wärmeisolationsseitig angeordnet sind (siehe hierzu Fig. 3).

Wie insbesondere Fig. 3 und Fig. 5 zeigen, sind die Befestigungsteile 24 mit einer flachprofiligen Handhabe 25 ausgestattet, an welche sich ein haubenartiges Abdeckteil 26 anschließt, welches ähnlich der Kontur eines Kegelstumpfes ausgebildet ist und welches auf seiner von der Handhabe 25 zugewandten Seite geschlossenwandig ausgebildet ist, während es auf der von der Handhabe 25 abgewandten Seite randoffen ausgeführt ist. Das Abdeckteil 26 weist einen schneidenartig ausgebildeten, umlaufenden Rand auf, welcher als Dichtlippe 27 dient. Ferner ist das Abdeckteil 26 mit zwei einander gegenüberliegenden, innerhalb seines Aufnahmeraumes 28 angeformte hakenähnlich ausgebildete Haltenasen 29 versehen. Diese sind mit zu den freien Rändern der Dichtlippe 27 hin abgewinkelten Nasenendabschnitten 30 ausgestattet, und weisen an ihren Übergang zu den Nasenendabschnitten 30 ein äußeres Abstandsmaß zueinander auf, welches zumindest im wesentlichen dem Abstand (d) der nasenähnlich vorspringenden Randabschnitte 17.1 der Durchbrüche 17 (in Fig. 4 mit strichpunktierten Linien angedeutet) entspricht.

Zur Befestigung der Verstärkungsschiene 18 werden die Haltenasen 29 der Befestigungsteile 24 in einem ersten Montageschritt durch den infolge der zurückspringenden Randabschnitte 17.2 erweiterten Bereich der Öffnungen 23 und im Anschluß daran durch den erweiterten Bereich der Durchbrüche 17 hindurchgeführt und entgegen der sich unter Vorspannung an der wärmeisolationsseitigen Oberfläche der Verstärkungsschiene abdichtend abstützenden Dichtlippe 27 so weit aus den Durchbrüchen 17 herausgeführt, bis sich zwischen den der Handhabe 25 zu-

LG0000854

05.10.98

gewandten Innenflächen der Nasenendabschnitte 30 und der kühlfachseitigen Oberfläche der Seitenwand 15 ein Spalt ergibt. Ausgehend von dieser Position, in welcher die Verstärkungsschiene 18 durch die Befestigungsteile 24 zu der Seitenwand 15 zumindest weitestgehend vorfixiert sind, werden die Befestigungsteile 24 anhand der Handhabe 25 in Pfeilrichtung I in Art eines Bajonettverschlusses in ihre Verriegelungsstellung II (siehe Fig. 5) gebracht, in welcher die elastische Dichtlippe abdichtend an der wärmeisolationsseitigen Oberfläche der Verstärkungsschiene 18 anliegt. In der Verriegelungsstellung ist die Verstärkungsschiene 18 durch die Anpassung des Außenabstandes der Haltenasen 29 an den lichten Abstand der zurückspringenden Randbereiche 17.1 der Durchbrüche 17 in der Seitenwand 15 lagegenau positioniert.

Wie aus den Fig. 2 bis 4 hervorgeht, dienen die an den Seitenwänden 15 anhand der Befestigungsteile 24 festgesetzten Verstärkungsschienen 18 mit ihren Halteelementen 22 zur Halterung von Teleskopauszügen 31. Diese besitzen einen an den Seitenwänden 15 festgesetzten, im wesentlichen einen U-förmigen Querschnitt aufweisenden Festschienenteil 32, welcher zum Zwecke seiner Befestigung mit hakenähnlichen, innerhalb seiner Schienenendabschnitte 33 angeordneten Haltelaschen versehen ist, von denen die innerhalb des der Tür 12 zugewandten Schienenendabschnitts 33 vorgesehene Haltelasche 34 mit ihrem freien Laschenende 35 zur Aufstellebene des Kühlgerätes 10 gerichtet ist, während die innerhalb des türfernen Schienenendabschnitts 32 angeordnete Haltelasche 36 mit ihrem freien Laschenende 37 entgegengesetzt zur Tür 12 ausgerichtet ist. Am Festschienenteil 32, nahe des freien Endes seines in Einbaulage oben liegenden U-Profilschenkels ist ein Ausschnitt 39 vorgesehen, welcher zur lösbaren Befestigung eines als Haltemittel ausgebildeten Federbügels 40 dient. Dieser besitzt einen im Querschnitt U-förmig ausgebildeten, ungleich lange Schenkel aufweisenden Halteabschnitt 41, dessen kürzerer Schenkel an seiner dem längeren Schenkel zugewandten Innenseite mit einer Halterippe 42 ausgestattet ist, während der längere Schenkel des Halteabschnitts 42 an seinem freien Ende einen rechtwinklig dazu angeordneten stummelartigen Fortsatz 43 aufweist. Der Fortsatz 43 weist einen freien, als Verriegelungsnase 44 ausgebildeten Endabschnitt auf, von welchem zurückversetzt eine im wesentlichen rechtwinklig zum Fortsatz 43 angeordnete, mit ihrem freien Ende vom Festschienenteil 32 weggerichtete Bedienungslasche 45 sitzt. Der Federbügel 40 ist mit seinem Halteabschnitt 41 über das freie Ende des oben liegenden U-Profilschenkels des Festschienenteils 32 gestülpt, wobei der kürzere

LG0000855

Schenkel des Halteabschnitts 41 an der Unterseite des U-Profilschenkels anliegt und mit seiner Halterippe 42 in den Ausschnitt 39 eindringt (siehe hierzu insbesondere Fig. 2.). Im Abstand zu dem am Festschienenteil 32 festgesetzten Federbügel 40 besitzt ersteres, nahe seines freien Endes eine ortsfest angeordnete Laufrolle 46.

Das Festschienenteil 32 dient zur verschieblichen Führung eines ebenfalls weitestgehend mit U-profiligem Querschnitt versehenen Losschienenteils 47, welches in Einbaulage an seinem türfernen Ende eine ortsfest angeordnete Laufrolle 48 aufweist, welche sich zur verschieblichen Führung des Losschienenteils 47 an den als Führungsbahnen dienenden, einander zugewandten Innenseiten der U-Profilschenkel des Festschienenteils 32 abwälzt, während sich die Laufrolle 46 an den einander zugewandten Innenseiten der U-Profilschenkel des Losschienenteils 47 abwälzt. Neben der Laufrolle 48 weist das Losschienenteil 47 sowohl an seinem türfernen Ende als auch an seinem türnahen Ende jeweils ein Haltemittel 49 auf. Die Haltemittel 49 dienen zur lösbaren Fixierung des Losschienenteils 47 an einem schubladenartigen Behälter 50, welcher zum Zwecke seiner Befestigung an seinen Seitenwänden 51 einen stufenartigen Rücksprung aufweist, innerhalb welchem das Losschienenteil 47 sitzt.

Wie insbesondere aus Fig. 4 hervorgeht, werden die aus dem Festschienenteil 32 und dem Losschienenteil 47 zusammengesetzten Teleskopauszüge 31 zu ihrer Befestigung innerhalb des Kühlfaches 13 mit der am Festschienenteil 32 an dessen türfernen Endabschnitt 33 vorgesehenen Haltelasche 34 zu der über den Durchbruch 17 an der Seitenwand 15 zugänglichen Aussparung 21 im rückwärtigen Bereich des Kühlfaches positioniert. Im Anschluß daran wird das Festschienenteil 32 in Pfeilrichtung III in Richtung zur Rückwand des Kühlfaches 13 hin verschoben. Hierdurch übergreift die Haltelasche 34 den als Halteelement 22 im rückwärtigen Bereich des Kühlfaches 13 dienenden vertikal angeordneten Abschnitt des Haltesteges, welcher in dieser Position zwischen der Haltelasche 34 und der Basis des als U-Profil ausgebildeten Festschienenteils 32 liegt. Der dem Festschienenteil 32 zugewandte Abschnitt der Haltelasche 34 liegt dabei am horizontalen Abschnitt zur Bestimmung seiner positionsrichtigen Höhenlage des Festschienenteils 32 auf. Daraufhin wird das Festschienenteil 32 mit seinem türnahen Endabschnitt 33 in Richtung des Pfeiles IV bewegt, wodurch die am türnahen Endabschnitt 33 des Festschienenteils 32 vorgesehene Haltelasche 36 den als Halteelement 32 dienen-

LG0000856

05.10.98

den horizontal verlaufenden Haltesteg an der Verstärkungsschiene 18 übergreift, welcher in dieser Position zwischen der Haltelasche 36 und der Basis des als U-Profil ausgebildeten Festschienenteils 32 sitzt. Nach dem Erreichen der positionsrichtigen Endlage der Haltelasche 36 schnappt die Verriegelungsnase 44 am Federbügel 40 in den zurückspringenden obenliegenden Randabschnitt 17.2 am Durchbruch 17 an der Seitenwand 15 ein. Hierdurch ist das Festschienenteil 32 und somit der Teleskopauszug 31 an seinem türnahen Endabschnitt 33 in vertikaler Richtung lagegesichert.

Eine Lagesicherung des Teleskopauszuges 31 in horizontaler Richtung ergibt sich durch den Eingriff der Haltelasche 36 in den in Form eines U-Profils ausgebildeten Haltestegs 22. Die vertikale Lagesicherung des türfernen Endabschnitts 33 des Festschienenteils 32 ist durch den Eingriff der Haltelasche 34 in den Haltesteg 22 bewirkt. Beide Haltelaschen 34 und 36 sind in ihrer Montageposition innerhalb des Aufnahmeraumes 28 des Abdeckteiles 26, welches in seiner Montageposition an der Seitenwand 15 mit seiner Dichtlippe 27 die Aussparung 21 abdichtend umgibt, wodurch ein Eintritt des im flüssigen Ausgangskomponenten eingebrachten Wärmeisolationsmaterials in das Kühlfach 13 verhindert ist. Die Teleskopauszüge 31 lassen sich zu Reinigungszwecken des Kühlfaches 13 durch eine Betätigung der am Federbügel 40 vorgesehenen Bedienunglasche 45 in Pfeilrichtung V, wodurch die Verriegelungsnase 44 außer Eingriff mit dem ihr zugewandten Rand des Randabschnittes 17.2 gebracht ist, entgegen der durch die Pfeile III und IV angedeuteten Montagerichtung von der Seitenwand 15 demontieren.

LG0000857

05.10.98

Ansprüche

1. Kühlgerät mit einem wärmeisolierendem Gehäuse und wenigstens einem von einer Tür verschließbaren Kühlfach, welchem wenigstens ein schubladenartiger Behälter angeordnet ist, welcher anhand von an den Seitenwänden des Kühlfaches vorgesehenen Teleskopauszügen aus dem Kühlfach herausziehbar ist, wobei jeder der Teleskopauszüge ein an den Seitenwänden des Kühlfaches festgesetztes Festschienenteil und wenigstens ein daran verschieblich gehaltertes Losschienenteil aufweist,
dadurch gekennzeichnet,
daß das Festschienenteil (32) zu seiner Befestigung an den Seitenwänden (15) wenigstens zwei im Abstand zueinander angeordnete, mit Aufnahmen (22) an den Seitenwänden (15) formschlüssig zusammenzuwirken vermögende hakenähnlich geformte Haltelaschen (34, 36) aufweist, von denen eine mit ihrem freien Endabschnitt (35) zumindest annähernd in Bewegungsrichtung der Teleskopauszüge (31) zeigt, während die andere Haltelasche (36) mit ihrem freien Endabschnitt (37) zur Aufstellebene des Kühlgerätes (10) gerichtet und durch Haltemittel (40) in ihrer Befestigungsposition gehalten ist.

2. Kühlgerät nach Anspruch 1, dadurch gekennzeichnet, daß das Festschienenteil (32) zumindest im Nahbereich der mit ihrem freien Endabschnitt (37) zur Aufstellebene des Kühlgerätes (10) gerichteten Haltelasche (36) ein als Haltemittel dienenden lösbares Fixierelement aufweist, welches die Haltelasche (36) in die Aufnahme (22) zwingt.

3. Kühlgerät nach Anspruch 2, dadurch gekennzeichnet, daß das lösbare Fixierelement als aus seiner Halteposition auslenkbarer, am Festschienenteil (32) festgesetzter Federbügel (40) ausgebildet ist, welcher eine mit einer Aufnahme der Seitenwand (15) formschlüssig entgegen der Fügerichtung der Haltelasche (36) zusammenwirkende Haltenase (44) aufweist.

LG0000858

05.10.98

4. Kühlgerät nach Anspruch 1, dadurch gekennzeichnet, daß das Festschienenteil (32) an seinem türfernen Abschnitt (33) die mit ihrem freien Endabschnitt (35) in Bewegungsrichtung der Teleskopauszüge (31) zeigende Haltelasche (34) aufweist.

5. Kühlgerät nach Anspruch 4, dadurch gekennzeichnet, daß die am türfernen Abschnitt (33) der Teleskopauszüge (31) angeordnete Haltelasche (34) mit ihrem freien Endabschnitt (35) von der Tür (12) weggerichtet ist.

6. Kühlgerät nach Anspruch 1, dadurch gekennzeichnet, daß die Aufnahmen (22) an den Seitenwänden (15) durch daran vorgesehene, zumindest weitestgehend eigensteife und gurtartige Halteelemente gebildet sind.

7. Kühlgerät nach Anspruch 6, dadurch gekennzeichnet, daß die gurtartigen Halteelemente wärmeisolationsseitig an den Seitenwänden (15) des Kühlfaches (13) festgesetzt und über Durchbrüche (17) in den Seitenwänden (15) zugänglich sind.

8. Kühlgerät nach Anspruch 6 oder 7, dadurch gekennzeichnet, daß die gurtartigen Halteelemente jeweils an den Endbereichen (20) einer aus Blech gefertigten Verstärkungsschiene (18) vorgesehen sind.

9. Kühlgerät nach Anspruch 8, dadurch gekennzeichnet, daß die Verstärkungsschiene (18) wenigstens eine in seine Längsrichtung sich erstreckende und zumindest annähernd an seine beiden Endbereichen (20) herangeführte Verstärkungsrippe (19) aufweist, welche in das Wärmeisolationsmaterial eingebettet ist.

10. Kühlgerät nach Anspruch 8 oder 9, dadurch gekennzeichnet, daß die Halteelemente an der Verstärkungsschiene (18) als durch Aussparungen (21) freigeschnittene, gurtartigen Haltestegen ausgebildet sind, mit welchen die Haltelaschen (34, 36) in Eingriff sind.

11. Kühlgerät nach einem der Ansprüche 8 bis 10, dadurch gekennzeichnet, daß die Verstärkungsschienen (18) an ihren Endbereichen mit wenigstens je ei-

LG0000859

nem wärmeisolationsseitig angeordneten Befestigungsteil (24) an den Seitenwänden (15) des Kühlfaches (13) festgesetzt sind.

12. Kühlgerät nach Anspruch 11, dadurch gekennzeichnet, daß die Befestigungsteile (24) wenigstens zwei zumindest annähernd einander gegenüberliegende Befestigungshaken (29) aufweisen, welche die Verstärkungsschiene (18) in Öffnungen (23) zu durchdringen vermögen und in Art eines Bajonettverschlusses mit den Rändern der Durchbrüche (17) an den Seitenwänden (15) in Eingriff bringbar sind.

13. Kühlgerät nach Anspruch 11 oder 12, dadurch gekennzeichnet, daß die Befestigungsteile (24) zumindest in ihrer Befestigungsposition sowohl die Aussparungen (21) als auch die Öffnungen (23) wenigstens flüssigkeitsdicht abdekken.

14. Kühlgerät nach einem der Ansprüche 11 bis 13, dadurch gekennzeichnet, daß die Befestigungsteile (24) haubenartig ausgebildet sind, innerhalb deren freien, mit einer Dichtlippe (27) versehenen Haubenrändern die Aussparungen (21) und die Öffnungen (23) der Verstärkungsschiene (18) liegen.

15. Kühlgerät nach Anspruch 14, dadurch gekennzeichnet, daß die Dichtlippe (27) unter Vorspannung an der wärmeisolationsartigen Oberfläche der Verstärkungsschiene (18) anliegt.

16. Kühlgerät nach einem der Ansprüche 11 bis 15, dadurch gekennzeichnet, daß die Befestigungsteile (24) eine Handhabe (25) aufweisen, mit Hilfe welcher sie in ihre Befestigungsposition bringbar sind.

17. Kühlgerät nach einem der Ansprüche 8 bis 12, dadurch gekennzeichnet, daß zwischen der Verstärkungsschiene (18) und der Seitenwand (15) ein als Zwischenlage ausgebildetes Dichtelement angeordnet ist, welches die Verstärkungsschiene (18) gegen den Durchbruch (17) in der Seitenwand (15) abdichtet.

LG0000860

11.11.98 ZTP 98 P 4038

1/3

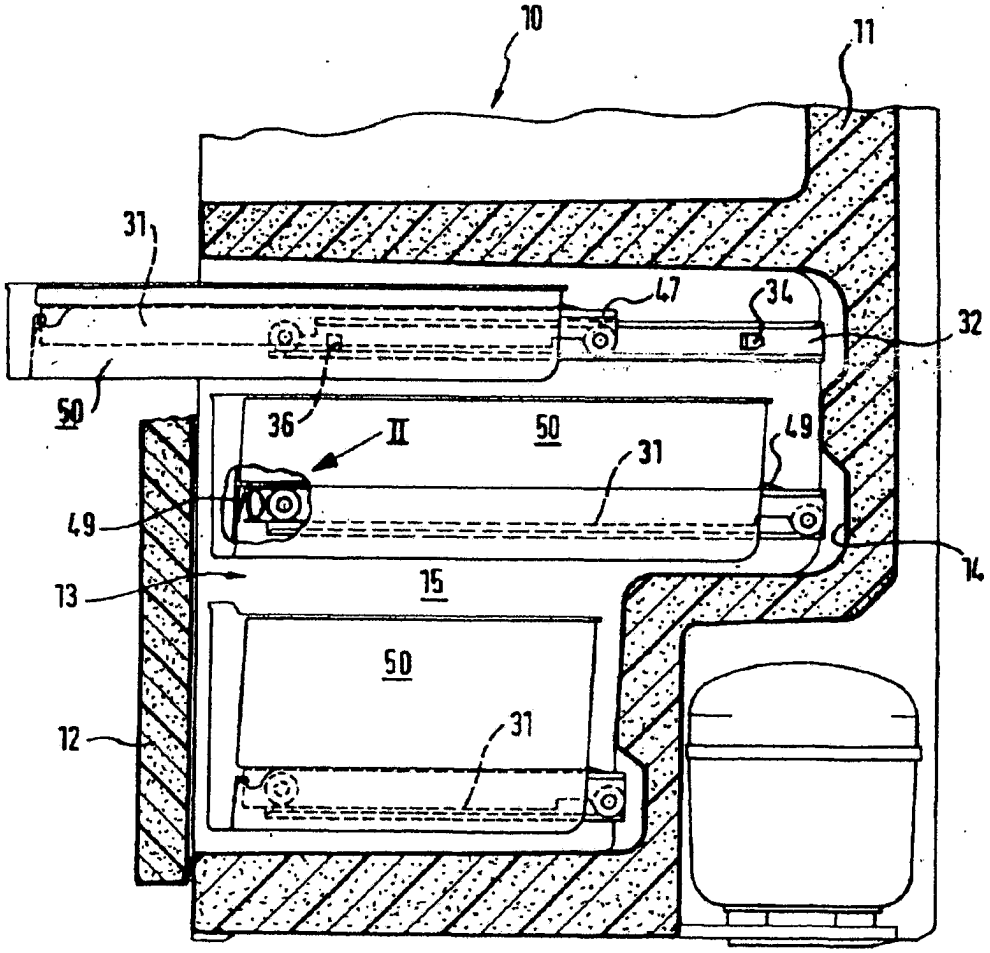

Fig. 1

LG0000861

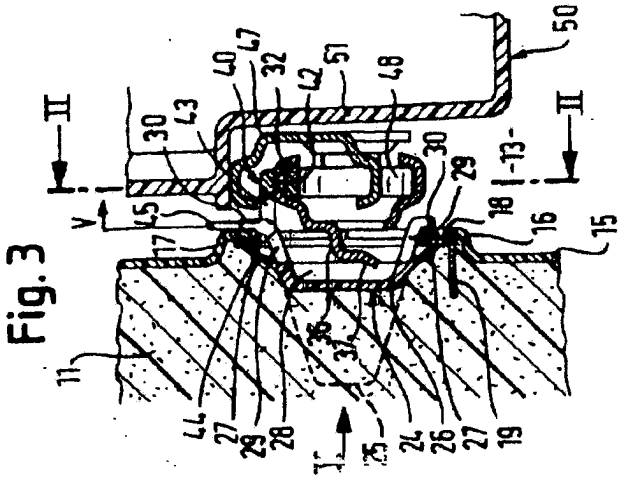

Fig. 3

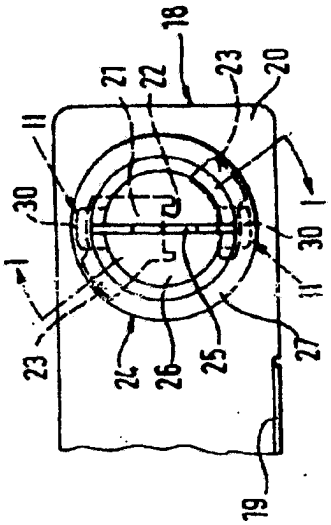

Fig. 5

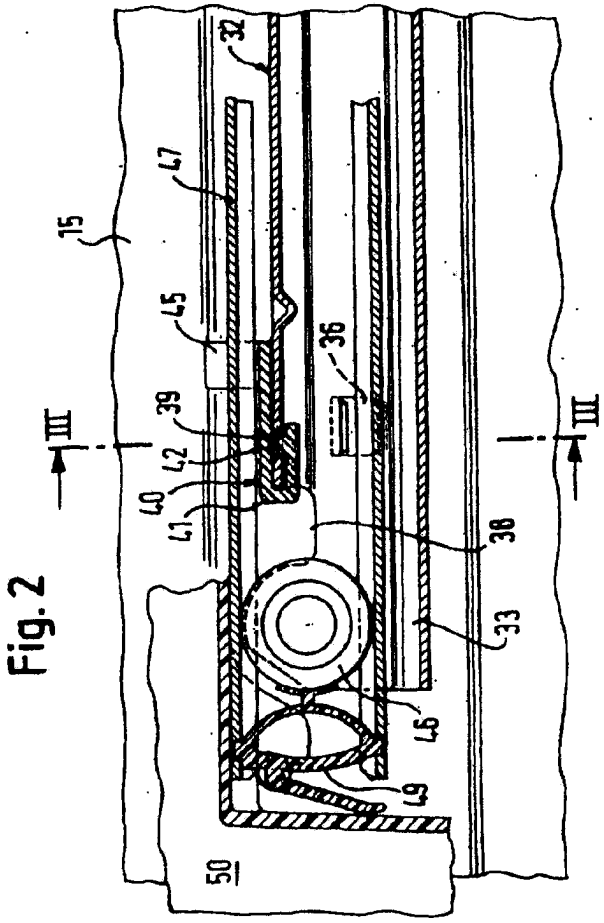

Fig. 2

LG0000862

ZTP 98 P 4038

11.11.98

3/3

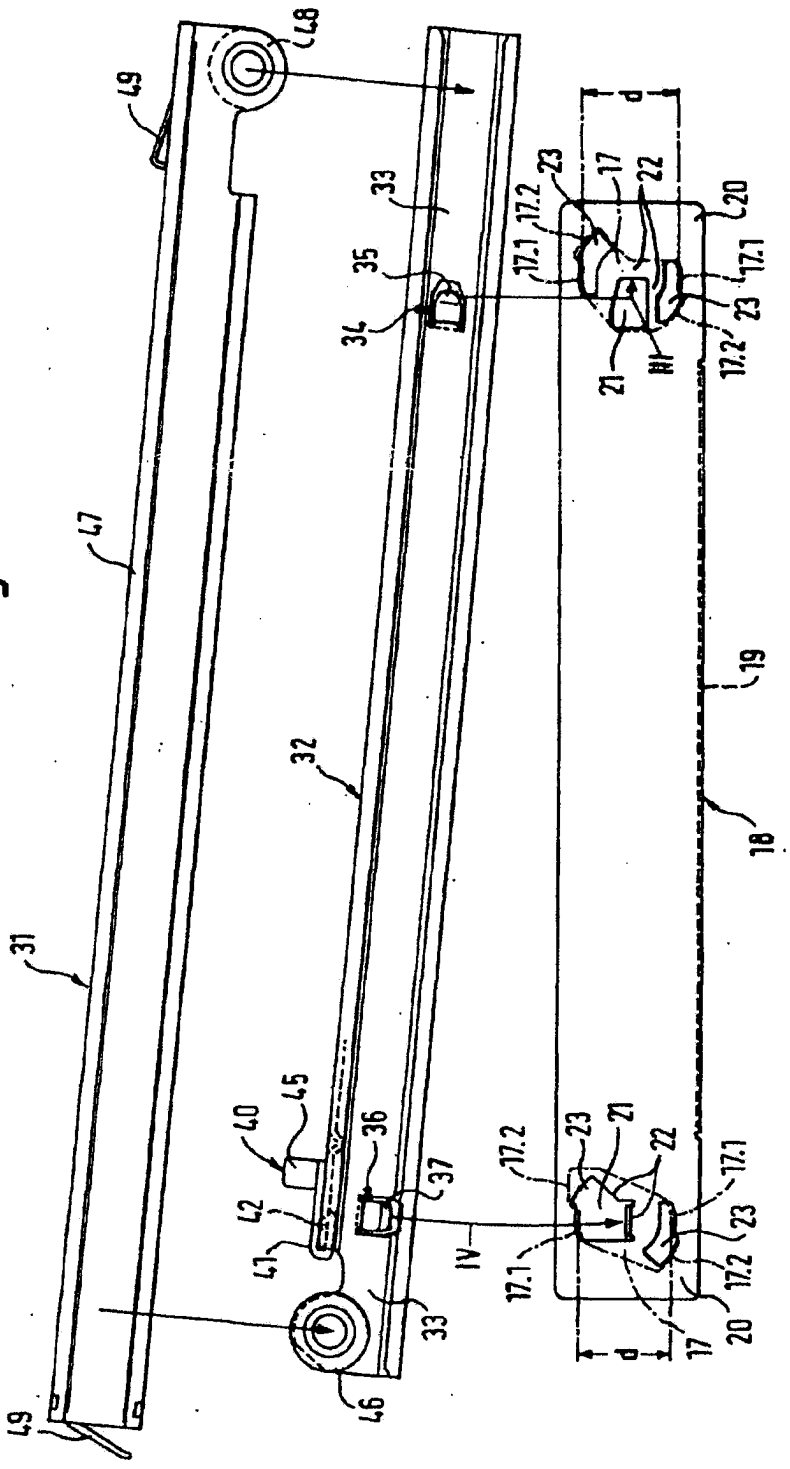

Fig. 4

LG0000863

LG0000863

EXHIBIT 13

US006478393B2

(12) **United States Patent**
Kim et al.

(10) **Patent No.: US 6,478,393 B2**
(45) **Date of Patent: Nov. 12, 2002**

(54) **SLIDING DEVICE FOR A STORAGE CASE**

(75) Inventors: **Yong-Myoung Kim**, Suwon; **Jeong-Man Nam**, Kwangju, both of (KR)

(73) Assignee: **Samsung Electronics Co., Ltd.**, Suwon (KR)

(*) Notice: Subject to any disclaimer, the term of this patent is extended or adjusted under 35 U.S.C. 154(b) by 38 days.

(21) Appl. No.: **09/731,897**

(22) Filed: **Dec. 8, 2000**

(65) **Prior Publication Data**

US 2002/0033657 A1 Mar. 21, 2002

(30) **Foreign Application Priority Data**

Aug. 28, 2000 (KR) 00-50069

(51) **Int. Cl.**[7] **A47B 88/04**

(52) **U.S. Cl.** 312/334.12; 312/334.7; 312/330.1; 384/19

(58) **Field of Search** 312/330.1, 334.1, 312/334.7, 334.8, 334.9, 334.12, 334.16, 334.18, 335, 402, 404; 384/19

(56) **References Cited**

U.S. PATENT DOCUMENTS

533,622 A * 2/1895 Turner 312/334.12

4,445,726 A * 5/1984 Rock et al. 384/19

FOREIGN PATENT DOCUMENTS

CA	582516	* 9/1959	..... 312/334.12
JP	07-043064	2/1995	
JP	11-118336	4/1999	

* cited by examiner

Primary Examiner—James O. Hansen
(74) *Attorney, Agent, or Firm*—Larson & Taylor, PLC

(57) **ABSTRACT**

A sliding device for a storage case is provided which is durable and provides a smooth sliding motion even in environments, such as those encountered in a refrigerator, wherein the storage case is subjected to humid, cold (below the freezing point) conditions. The sliding device comprises a fixed rail fixedly mounted to an inner side surface of the storage case and having a roller coupling portion in which a first set of rollers are rollably received; a movable rail fixedly mounted to an outer side surface of the storage container and having a roller coupling portion in which a set of second rollers are rollably received; and a middle rail which is slidably mounted between the fixed rail and the movable rail so as to provide a coupling relationship therebetween which guides the rolling motion of the first and second rollers. The fixed rail, the movable rail and the middle rail, as well as the rollers, are made of an injection molded plastic.

9 Claims, 7 Drawing Sheets

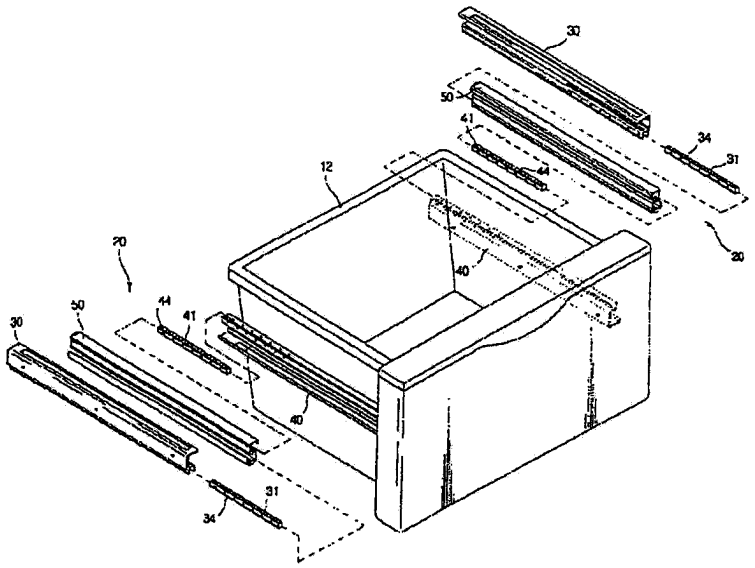

LG0000834

FIG. 1

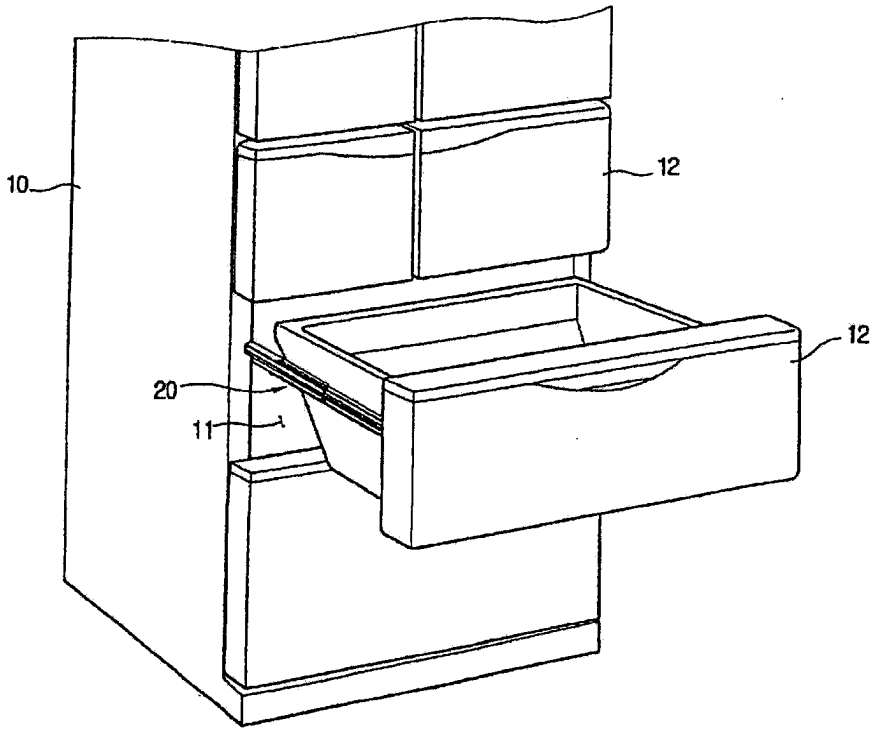

LG0000835

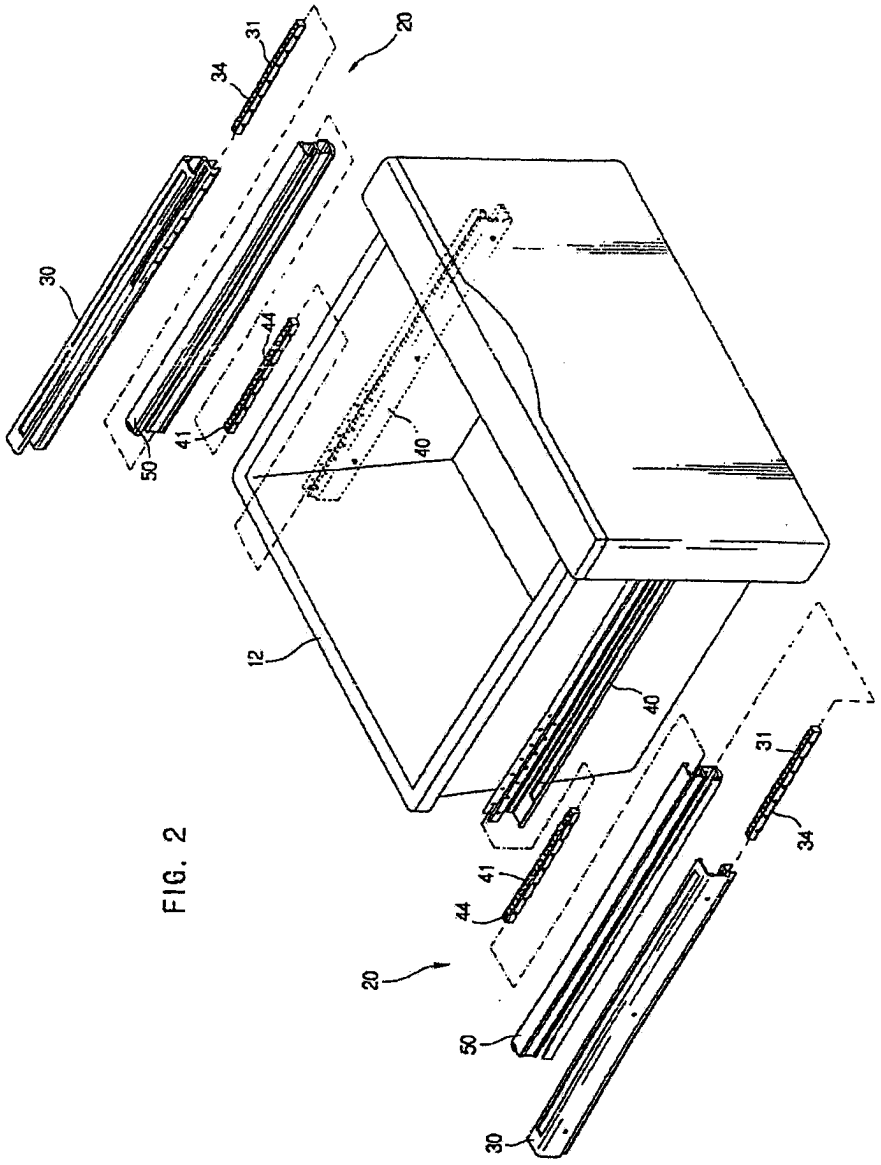

FIG. 2

LG0000836

FIG. 3

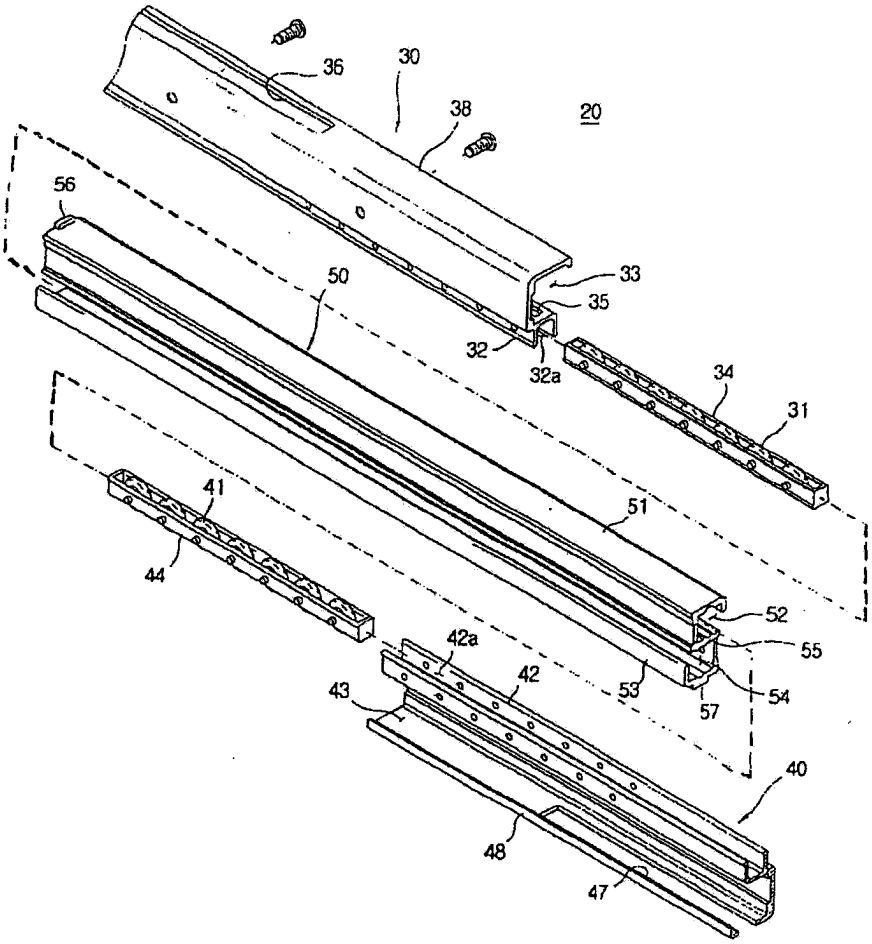

LG0000837

FIG. 4

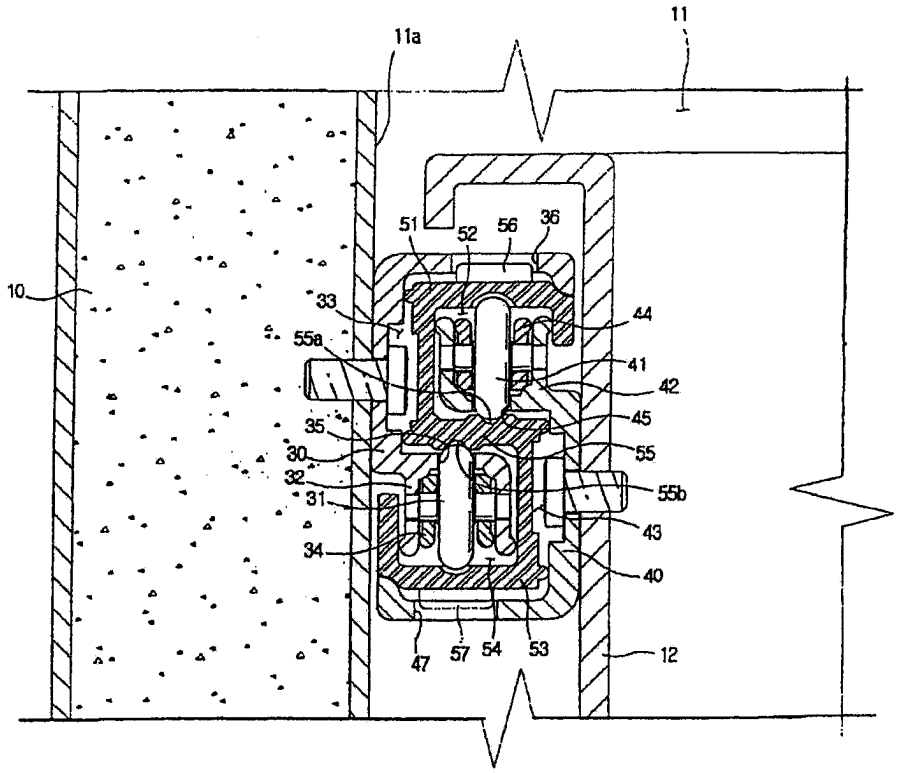

LG0000838

FIG. 5

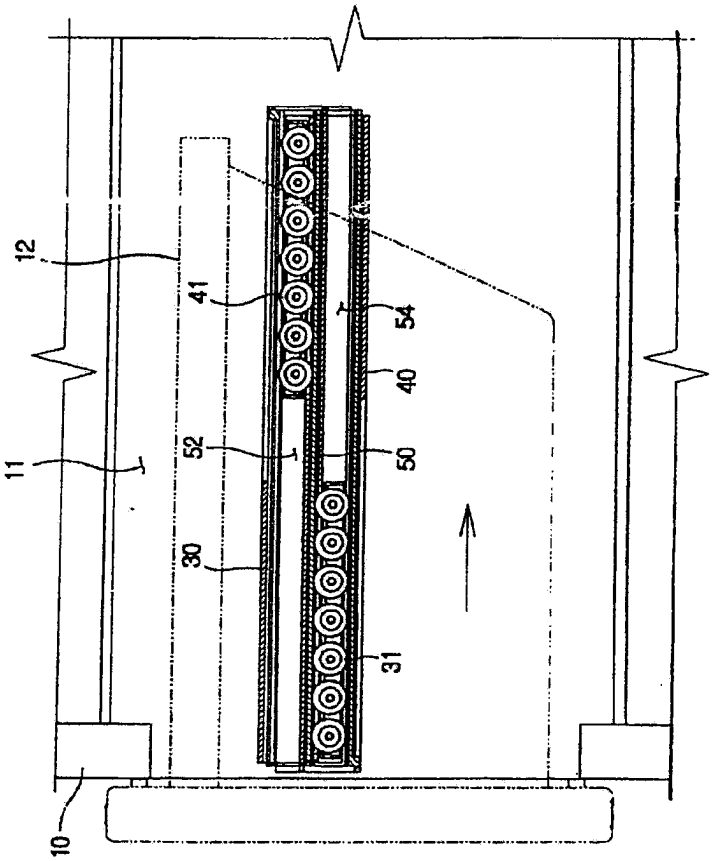

LG0000839

FIG. 6

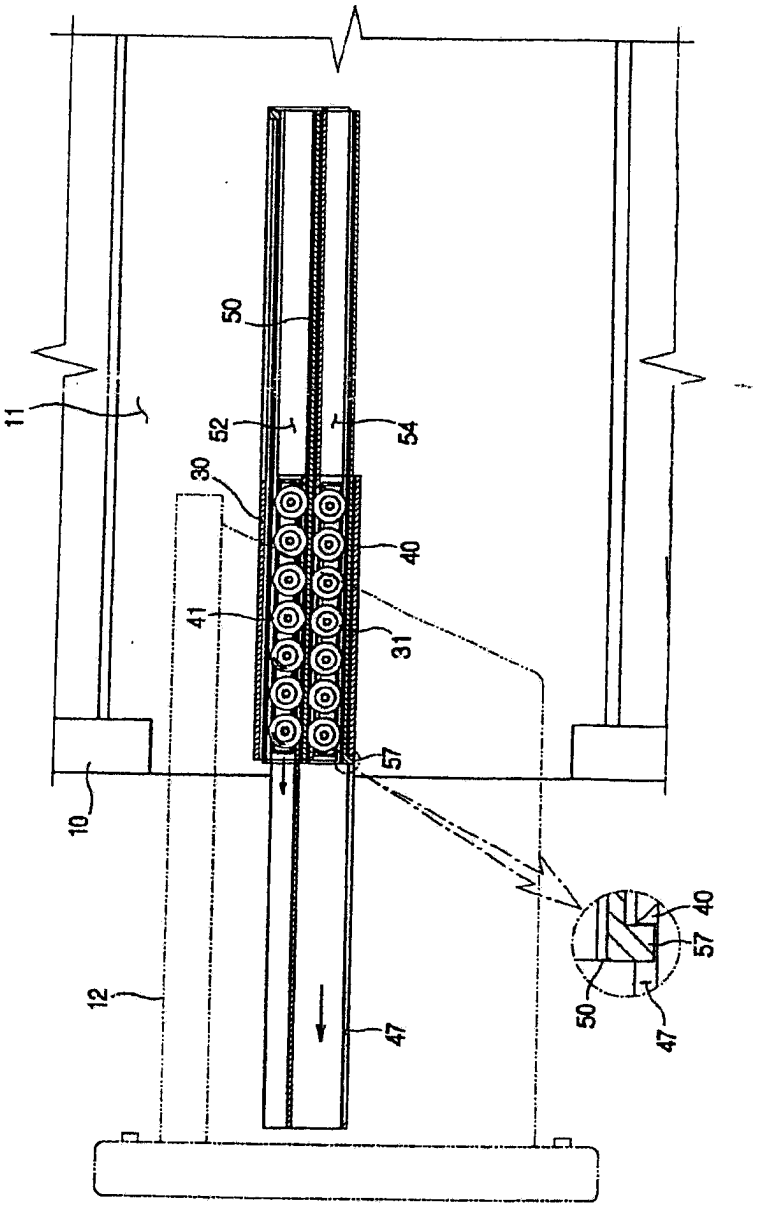

LG0000840

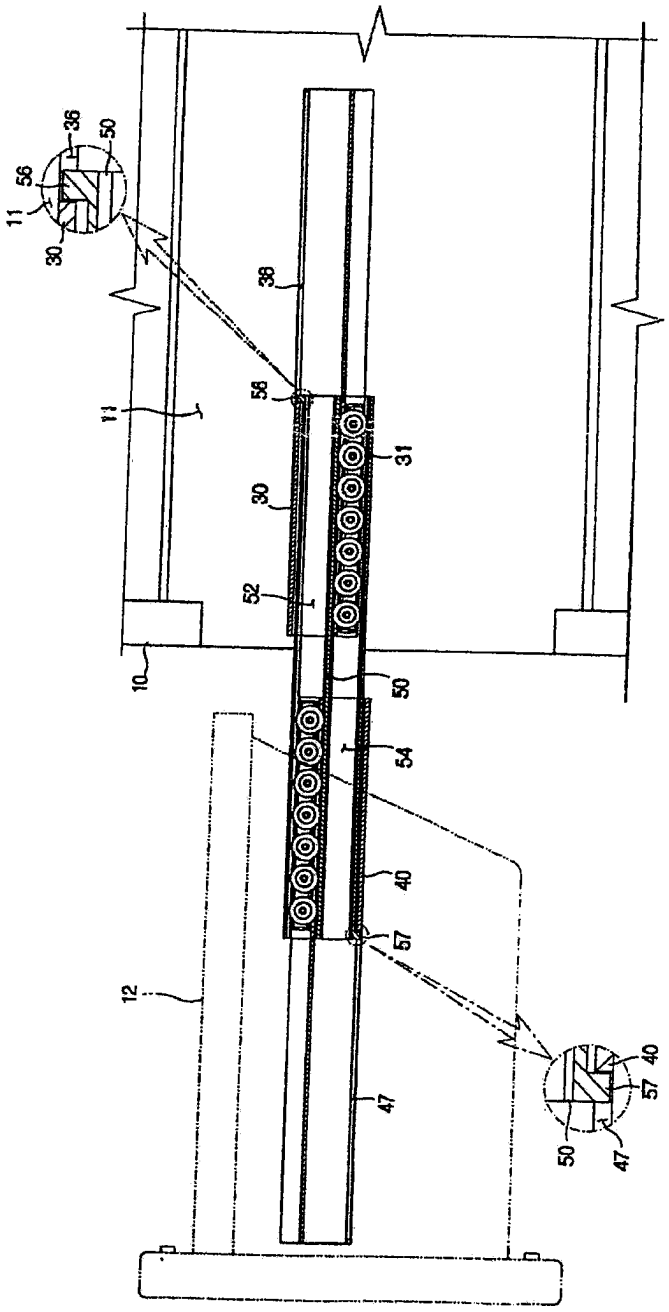

FIG. 7

LG0000841

SLIDING DEVICE FOR A STORAGE CASE

BACKGROUND OF THE INVENTION

1. Field of the Invention

The present invention relates to a sliding device for a storage case, and, more particularly, to a sliding device which can slide smoothly when mounted inside a storage case, such as a refrigerator, in a humid and cold (freezing) environment.

2. Description of Related Art

To promote smooth movement backward and forward of a heavy storage container containing a storage case with goods therein, sliding devices are provided on both outer side surfaces of the storage container and both inner side surfaces of the storage case.

Such sliding devices typically include a fixed rail, a movable rail, a plurality of balls, and a supporting means for the balls mounted on an inner side surface of the storage case. The fixed rail extends over its full length in the sliding direction of the storage container. The movable rail is mounted to an outer side surface of the storage container in alignment with the fixed rail and slides along the fixed rail. The plurality of balls are located between the fixed rail and the movable rail.

The fixed rail and the movable rail are made from roll formed metal plates. The rails are formed with concave guiding grooves for receiving the balls therein. The balls roll along the guiding grooves while closely contacting the grooves.

When this type of sliding device is used in a storage case for storing foods, the metal rails and balls may oxidize, i.e., rust, since the component parts of the sliding device are exposed to moisture. Thus, the rolling motion of the balls is eventually impaired and it becomes troublesome to open or shut the storage container. That is, if the guiding grooves and the small rolling balls become rusty, the sliding motion of the storage container is impaired and the life of the sliding device is shortened.

Further, when this type of sliding device is used in a storage case for a refrigerator or the like which is kept humid and cold, i.e., at a temperature below the freezing point, moisture is condensed and frozen on the rails or the balls, thereby impeding the sliding motion of the storage container.

Finally, because the fixed rail and the movable rail are made by roll formed metal plates, the manufacturing cost of these rails is high.

SUMMARY OF THE INVENTION

The present invention concerns a sliding device for a storage case which is constructed to solve the problems discussed above.

It is an object of the present invention to provide a sliding device for a storage case which does not rust but which provides a smooth sliding motion even when the storage case is kept humid and cold (below the freezing point) and granular ice is formed on rails.

It is another object of the present invention to provide a sliding device for a storage case which is durable and can be manufactured more easily and cheaply than conventional devices used for the same purposes.

In accordance with the invention, a sliding device is provided for providing sliding backward and forward movement of a drawer-type storage container relative to a storage case, the storage container being slidably mounted inside the storage case, and the sliding device comprising: a first plurality of rollers; a second plurality of rollers; a fixed rail fixedly mounted to an inner side surface of the storage case and including a roller coupling portion rollably receiving the first plurality of rollers; a movable rail fixedly mounted to an outer side surface of the storage container and including a roller coupling portion rollably received in the second plurality of rollers; and a middle rail slidably mounted between the fixed rail and the movable rail for providing a coupling relationship therebetween and for guiding the rolling motion of the first and second plurality of rollers, such that the movable rail and the storage container slide together by means of a rolling motion of the second plurality of rollers along the middle rail, and the middle rail slides along the fixed rail by means of a rolling motion of the first plurality of rollers.

Preferably, the middle rail further comprises an upper rail portion, including an upper channel for receiving the roller coupling portion of the movable rail therein and for guiding the sliding motion of the movable rail, a lower rail portion including a lower channel for receiving the roller coupling portion of the fixed rail therein and for guiding the sliding motion of the middle rail, and a partition rail portion integrally connecting the upper rail portion and the lower rail portion while partitioning the upper channel from the lower channel, and the fixed rail includes guiding space receiving the upper rail portion and the movable rail includes a guiding space for receiving the lower rail portion.

Advantageously, the upper rail portion of the middle rail opens toward the roller coupling portion of the movable rail, and the lower rail portion of the middle rail opens toward the roller coupling portion of the fixed rail.

Preferably, first movement restricting means are located between the fixed rail and the middle rail for restricting the movement of the middle rail, and second movement restriction means are located between the middle rail and the movable rail for restricting the movement of the movable rail.

Advantageously, the first and second movement restricting means each include hooking members and respective openings for receiving the hooking members therein.

Preferably, the hooking members protrude upwardly from the upper end surface of the middle rail and downwardly from the lower end surface of the middle rail, and the openings extend longitudinally of the fixed rail and at the movable rail, respectively.

Advantageously, a plurality of slots are formed in the roller coupling portions of the fixed rail and movable rail, respectively, such that the first plurality of rollers and the second plurality of rollers extend through the slots and undergo rolling motion in contact with the corresponding partition rail portion.

Preferably, the partition rail portion includes guiding grooves extending of the partition rail portion for guiding the rolling motion of the first and second plurality of rollers.

Advantageously, the invention further comprises a first roller supporting member within which the first plurality of rollers are disposed in series and a second roller supporting member within which the second plurality of rollers are disposed in series, the first roller supporting member being disposed in the roller coupling portion of the fixed rail and the second roller supporting member being disposed in the roller coupling portion of the movable rail.

Preferably, the movable rail is comprised of an injection molded plastic, the fixed rail is comprised of an injection

LG0000842

molded plastic, the middle rail is comprised of an injection molded plastic, and the rollers are comprised of an injection molded plastic.

Further features and advantages of the present invention will be set forth in, or apparent from, the detailed description of preferred embodiments thereof which follows.

BRIEF DESCRIPTION OF THE DRAWINGS

The accompanying drawings, which are incorporated in and constitute a part of the specification, illustrate a preferred embodiment of the invention, and, together with the description which follows, serve to explain the principles of the invention:

FIG. 1 is a perspective view of a refrigerator containing a sliding device for a storage case in accordance with a preferred embodiment of the present invention.

FIG. 2 is an exploded perspective view of a sliding device for the storage case.

FIG. 3 is an exploded perspective view of detailed structures of respective component parts of the embodiment of the sliding device as shown in FIG. 2.

FIG. 4 is a cross-sectional view of component parts of the embodiment of the sliding device shown in FIG. 3 in an assembled state.

FIG. 5 is a side-sectional view of an embodiment of the sliding device wherein the storage container is in a closed position.

FIG. 6 is a side-sectional view of an embodiment of the sliding device wherein the storage container is in a half-closed position.

FIG. 7 is a side-sectional view of an embodiment of the sliding device wherein the storage container is in a fully opened position.

DETAILED DESCRIPTION OF THE PREFERRED EMBODIMENTS

A preferred embodiment of the present invention will now be described in detail with reference to the accompanying drawings.

Referring to FIG. 1, a refrigerator for keeping foods in cold storage is shown which comprises an insulated main body **10** and a storage chamber **11**. The storage chamber **11** is open at its front portion. Slidably mounted inside the storage chamber **11** are one or more drawer-type storage containers **12** which are typically filled with food. This slidably mounting is provided by a pair of sliding devices; one sliding device, is denoted **20** and the other corresponding sliding device is hidden from view on the opposite side of the storage container **12**. The two sliding devices are collectively referred to as sliding devices **20** hereinbelow. The sliding devices **20** enable the storage containers **12** to slide backwardly and forwardly and, as explained below, are mounted on the storage chamber **11** and the corresponding storage container **12**.

As shown in FIG. **2**, each sliding device **20** comprises a fixed rail **30** which is fixedly mounted to an inner side surface of the storage chamber **11** of the refrigerator body **10**. The fixed rail **30** extends axially outwardly from this surface in the direction of a sliding motion of the storage container **12**. A movable rail **40** is mounted on an outer side surface of the storage container **12** so as to slide along the fixed rail **30**. A middle or intermediate rail **50** is slidably mounted between the fixed rail **30** and the movable rail **40** and provides coupling shown between the fixed rail **30** and the movable rail **40**. Because each of the pair of sliding devices **20** mounted on opposite sides of the storage container **12** is of the same construction, only one sliding device will be described hereinafter in detail.

Referring to FIGS. **3** and **4**, the fixed rail **30**, which is made of an injection molded plastic, includes a rail receiving portion **38** which has a flattened C-shaped traverse cross section. The rail receiving portion **38** includes a guiding space **33** and a roller coupling portion **32**. The roller coupling portion **32** extends downward from the rail receiving portion **38** to form a receiving space **32***a* into which a first plurality of rollers **31** are received. An upper rail portion **51** of the middle rail **50**, which is described hereinbelow, is slidably received in the guiding space **33** of the rail receiving portion **38**. The rollers **31** are disposed in series in a roller supporting member **34**. The roller supporting member **34** is of a predetermined length and is open at its upper and lower portions. The roller supporting member **34** receiving the rollers **31** therein is received in the receiving space **32***a* of the roller coupling portion **32**.

The movable rail **40** is of the same construction as the fixed rail **30**, and is mounted on a side surface of the storage container **12** so as to slide with the storage container **12**. The movable rail **40** includes a roller coupling portion **42** at an upper portion thereof, and a rail receiving portion **48** at a lower portion thereof. Accordingly, the roller coupling portion **42** and the rail receiving portion **48** of the movable rail **40** are disposed in a reversed orientation with respect to the corresponding portions **32** and **38** of the fixed rail **30**.

A second plurality of rollers **41** is disposed in series in a roller supporting member **44**. The coupling structure thereof corresponds to the coupling structure of the rollers **31**. The roller supporting member **44**, with the second rollers **41** received therein, is inserted into, i.e., received in, a receiving space **42***a* of the roller coupling portion **42** of the movable rail **40**.

The first and second rollers **31** and **41**, which are respectively mounted on the fixed rail **30** and the movable rail **40**, as well as the roller supporting members **34** and **44**, are made of an injection molded plastic. This prevents sliding device **20** from becoming rusty when used in the humid storage chamber **11** of a refrigerator or the like. Accordingly, the storage container **12** slides smoothly, and, moreover, the sliding device **20** can be easily manufactured.

The middle rail **50** has an S-shaped transverse cross section and is coupled to the fixed rail **30** and movable rail **40**. The middle rail **50** includes an upper rail portion **51** formed with an upper channel **52** for receiving the roller coupling portion **42** of the movable rail **40**, and for guiding the sliding motion of the movable rail **40**. The middle rail **50** also includes a lower rail portion **53** formed with a lower channel **54** for receiving the roller coupling portion **32** of the fixed rail **30** therein, and for enabling the middle rail **50** to slide by virtue of the rolling motion of the first rollers **31** of the fixed rail **30**. Additionally, a partition rail portion **55** connects the upper rail portion **51** with the lower rail portion **53** and forms a partition between the upper channel **52** and the lower channel **54**. The partition rail portion **55** is formed between the upper and lower rail portions **51** and **53**. In other words, the upper channel **52** and the lower channel **54** are respectively disposed above and below the partition rail portion **55**. The middle rail **50** is also made of an injection molded plastic.

After the fixed rail **30** and the movable rail **40** are coupled to the middle rail **50**, the upper rail portion **51** of the middle rail **50** is slidably inserted into the guiding space **33** of the

LG0000843

rail receiving portion 38 of the fixed rail 30, as shown in FIG. 4. Further, the lower rail portion 53 of the middle rail 50 is slidably inserted into the guiding space 43 of the rail receiving portion 48 of the movable rail 40. In addition, the roller coupling portion 32 of the fixed rail 30 is disposed in the lower channel 54 of the middle rail 50, and the roller coupling portion 42 of the movable rail 40 is slidably disposed in the upper channel 52.

Slots 35 and 45, through which the rollers 31 and 41 pass, are formed lengthwise at the corresponding roller coupling portions 32 and 42 of the fixed rail 30 and the movable rail 40, respectively so that the first and second rollers 31 and 41 can roll when in contact with the partition rail portion 55 of the middle rail 50 when the rails 30, 40 and 50 are assembled as aforementioned. Stated differently, the first and second rollers 31 and 41 protrude toward the respective guiding spaces 33 and 43 through the slots 35 and 45 formed at the fixed and movable rails 30 and 40, when the middle rail 50 is coupled to the fixed and movable rails 30 and 40, and thus the first and second rollers 31 and 41 are disposed in contact with the partition rail portion 55 of the middle rail 50. Guiding grooves 55*a* and 55*b* for guiding the rolling motion of the first and second rollers 31 and 41 are formed lengthwise at the upper and lower surfaces of the partition rail portion 55, respectively.

Each sliding device 20 further includes a first movement restricting means between the fixed rail 30 and the middle rail 50 and a second movement restricting means between the middle rail 50 and the movable rail 40 for restricting the movement of the middle rail 50 and for restricting the movement of the movable rail 40, respectively. The first means, i.e., the means for restricting the movement of the middle rail 50, includes an upper hooking member or hook 56 which protrudes upward from upper rear end portion of the upper rail portion 51 of the middle rail 50, and protrudes from an upper opening 36. The upper opening 36 extends lengthwise for a predetermined distance in an upper surface of the fixed rail 30. Accordingly, as the middle rail 50 slides backwardly and forwardly, the upper hooking member 56 engages the front end of the upper opening 36, thereby stopping movement of the middle rail 50. The second means, i.e., the means for restricting the range of motion or moving distance of the movable rail 40 includes a lower hooking member 57 which protrudes downwardly from a lower front end portion of the lower rail portion 53 of the middle rail 50, and protrudes from a lower opening 47. The lower opening 47 extends lengthwise for a predetermined length in a lower surface of the movable rail 40. Accordingly, as the moving rail 40 slides backwardly and forwardly, the lower hooking member 57 engages the rear end of the lower opening 47, thereby stopping movement of the movable rail 40.

In operation, when the rails 30, 40 and 50 are assembled, i.e., coupled together as shown in FIG. 4, the storage container 12 is slidably mounted in the storage chamber 11 and the rails 30, 40 and 50 are located substantially one over another as shown in FIG. 5. The first rollers 31 are received in the lower channel 54 of the middle rail 50 and are supported by the roller coupling portion 32 (FIG. 4) of the fixed rail 30. The first rollers 31 are located at a frontal open portion of the storage chamber 11. The second rollers 41 are received in the upper channel 52 of the middle rail 50 and are supported by the roller coupling portion 42 (FIG. 4) of the moving rail 40. As illustrated, the second rollers 41 are located at a rear closed portion of the storage chamber 11. When the storage container 12 is pulled forwardly to open the same, the movable rail 40 which is mounted on the side surface of the storage container 12, is moved forward. Consequently, the second rollers 41 of the movable rail 40 roll along the guiding groove 55*a* (FIG. 4) formed at the lower surface of the upper channel 52 of the middle rail 50. Accordingly, movable rail 40 is moved forward with the storage container 12. As shown in FIG. 6, when the storage container 12 is in a half opened position, the lower hooking member 57 of the middle rail 50 is located adjacent to a rear portion of the lower opening 47 of the movable rail 40. The second rollers 41 move toward a front portion of the upper channel 52 which is disposed above the first rollers 31. When the storage container 12 is pulled forward, the lower hooking member 57 of the middle rail 50 engages the rear end of the lower opening 47 of the movable rail 40 thereby stopping further movement of the movable rail 40.

If, at this stage, the storage container 12 is pulled forwardly, the lower hooking member 57, with which the rear end of the lower opening 47 is engaged, is also pulled forwardly. Accordingly, the middle rail 50 moves forward with the storage container 12 while the first rollers 31 roll without moving.

As shown in FIG. 7, when the middle rail 50 moves forwardly a predetermined distance corresponding to that at which the storage container 12 is fully opened, the upper hooking member 56 engages the front end of the upper opening 36 of the fixed rail 30, thereby stopping the further movement of the middle rail 50.

If a user pushes the storage container 12 into the storage chamber 11 after putting food into or withdrawing food from the storage container 12, the storage container 12 slides into the storage chamber 11 in an operation which is the reverse of that associated with pulling out the storage container 12.

During the sliding motion of the storage container 12 described above, the weight of the storage container 12 is transferred to the partition rail portion 55 of the middle rail 50 through the second rollers 41 of the movable rail 40, and thereafter to the first rollers 31 of the fixed rail 30. Finally, the weight of the container 12 is transferred to a side wall of the storage chamber 11 on which the fixed rail 30 is mounted.

It will be understood from the foregoing that during the sliding motion of the sliding device 20, the first and second rollers 31 and 41 contact and roll on the partition rail portion 55 of the middle rail 50. Further, the weight of the storage container 12 is transferred proportionally to the first and second rollers 31 and 41. This operation provides smoothing out of the sliding motion of the middle rail 50 and the movable rail 40 (see FIG. 4).

Alternatively, the movable rail 40 and the middle rail 50 may be moved in reverse order or simultaneously. However, the fundamental operation of the respective rails 40 and 50 remains the same.

Because the fixed rail 30, the movable rail 40, the middle rail 50 and the plural rollers 31 and 41 are made of an injection molded plastic, the sliding device 20 does not rust nor is device 20 prone to other problems associated with metal parts in a humid environment. Therefore, the device 20 can be used in the humid storage chamber 11 of a refrigerator or the like without impairing the operation of the sliding device 20. Further, because the first and second rollers 31 and 41 roll with minimum contact in the guiding grooves 55*a* and 55*b* formed in the partition rail portion 55, the rollers 31 and 41 can roll over granular ice which may be produced on a surface of the middle rail 50, thereby ensuring smooth movement of the storage container 12.

Although the invention has been described above in relation to preferred embodiments thereof, it will be under-

LG0000844

stood by those skilled in the art that variations and modifications can be effected in these preferred embodiments without departing from the scope and spirit of the invention.

What is claimed is:

1. A sliding device for providing sliding backward and forward movement of a drawer-type storage container relative to a storage case, the storage container being slidably mounted inside the storage case, and said sliding device comprising:

a first plurality of roller;

a second plurality of rollers;

a fixed rail fixedly mounted to an inner side surface of the storage case and including a roller coupling portion rollably receiving said first plurality of rollers;

a movable raid fixedly mounted to an outer side surface of the storage container and including a roller coupling portion rollably receiving said second plurality of rollers; and

a middle rail slidably mounted between the fixed rail and the movable rail for providing a coupling relationship therebetween and for guiding the rolling motion of the first and second plurality of rollers such that the movable rail and the storage container slide together by means of a rolling motion of the second plurality of rollers along the middle rail, and the middle rail slides along the fixed rail by means of a rolling motion of the first plurality of rollers, the middle rail further comprising:

an upper rail portion including an upper channel for receiving the roller coupling portion of the movable rail therein and for guiding the sliding motion of the movable rail;

a lower rail portion including a lower channel for receiving the roller coupling portion of the fixed rail therein and for guiding the sliding motion of the middle rail,

a partition rail portion integrally connecting the upper rail portion and the lower rail portion while partitioning the upper channel from the lower channel, and the fixed rail includes a guiding space for receiving the upper rail portion and the movable rail includes a guiding space for receiving the lower rail portion.

2. A sliding device according to claim 1, wherein the upper rail portion of the middle rail opens toward the roller coupling portion of the movable rail, and wherein the lower rail portion of the middle rail opens toward the roller coupling portion of the fixed rail.

3. A sliding device according to claim 1, further comprising first movement restricting means located between the fixed rail and the middle rail for restricting the movement of the middle rail, and second movement restriction means located between the middle rail and the movable rail for restricting the movement of the movable rail.

4. A sliding device according to claim 3, wherein the first and second movement restricting means each include hooking members and respective openings for receiving the hooking members therein.

5. A sliding device according to claim 4, wherein the hooking members protrude upwardly from the upper end surface of the middle rail and downwardly from the lower end surface of the middle rail, and wherein the openings extend longitudinally of the fixed rail and at the movable rail, respectively.

6. A sliding device according to claim 1, further comprising: a plurality of slots formed in the roller coupling portions of the fixed rail and movable rail, respectively, such that the first plurality of rollers and the second plurality of rollers extend through the slots and undergo rolling motion in contact with the corresponding partition rail portion.

7. A sliding device according to claim 6, wherein said partition rail portion includes longitudinally extending guiding grooves for guiding the rolling motion of the first and second plurality of rollers.

8. A sliding device according to claim 1, further comprising a first roller supporting member within which the first plurality of rollers are disposed in series and a second roller supporting member within which the second plurality of rollers are disposed in series, the first roller supporting member being disposed in the roller coupling portion of the fixed rail and the second roller supporting member being disposed in the roller coupling portion of the movable rail.

9. A sliding device according to claim 1, wherein the movable rail is comprised of an injection molded plastic, the fixed rail is comprised of an injection molded plastic, the middle rail is comprised of an injection molded plastic, and the rollers are comprised of an injection molded plastic.

* * * * *

LG0000845

EXHIBIT 14

Oct. 31, 1961 C. F. PETKWITZ 3,006,710

REFRIGERATOR CABINET SHELF ARRANGEMENT

Filed Aug. 15, 1960 2 Sheets-Sheet 1

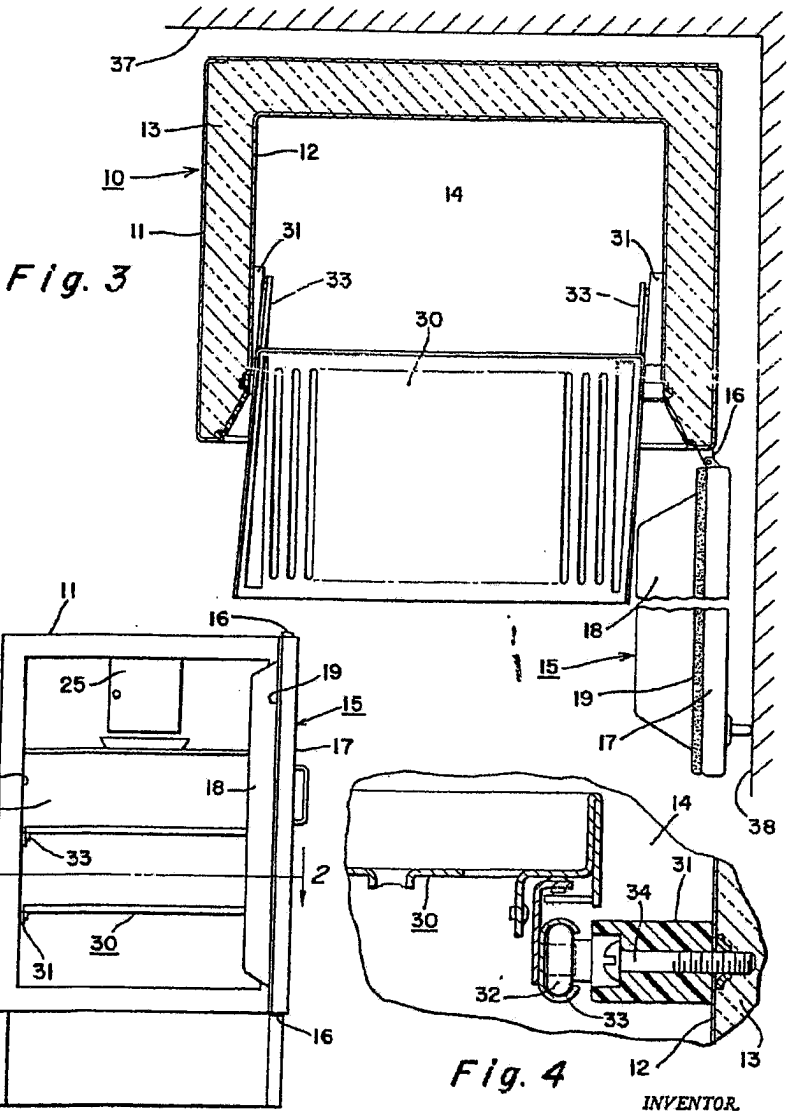

Fig. 3

Fig. 1

Fig. 4

INVENTOR.
Carl F. Petkwitz
BY
Lloyd M. Keighley.
His Attorney

LG0000405

LG0000405

Oct. 31, 1961 C. F. PETKWITZ 3,006,710

REFRIGERATOR CABINET SHELF ARRANGEMENT

Filed Aug. 15, 1960 2 Sheets-Sheet 2

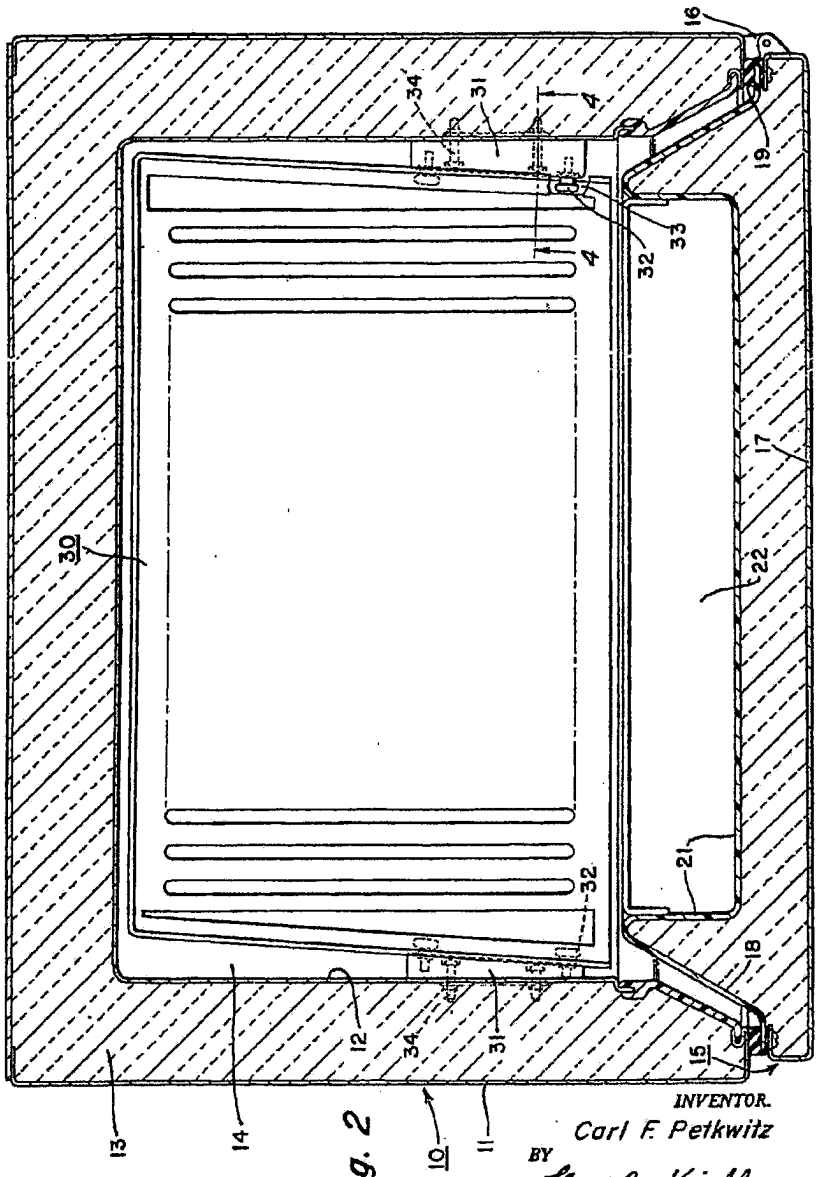

Fig. 2

INVENTOR.
Carl F. Petkwitz
BY
Lloyd M. Keighley
His Attorney

LG0000406

United States Patent Office 3,006,710
Patented Oct. 31, 1961

3,006,710
REFRIGERATOR CABINET SHELF ARRANGEMENT

Carl F. Petkwitz, Dayton, Ohio, assignor to General Motors Corporation, Detroit, Mich., a corporation of Delaware

Filed Aug. 15, 1960, Ser. No. 49,741
11 Claims. (Cl. 312—311)

This invention relates to cabinets and particularly to a shelf or article support arrangement in a storage chamber of a refrigerator cabinet.

It is the purpose of the present invention to correct or overcome certain problems that have presented themselves in the development and installation of refrigerator cabinets. Present-day household refrigerator cabinets include a door having a portion projecting into a food storage chamber and which is recessed or hollowed out to accommodate food or article supporting shelves so as to expose food or articles carried by the door to the low temperature within the chamber. When such doors are opened 90° with respect to the refrigerator cabinet upon which they are hingedly mounted or secured or when the cabinet is installed in a corner or nook of a room or kitchen so that the door can be opened only throughout an arc of 90°, the shelved projecting portion of the refrigerator cabinet door is located in front of the food chamber access opening. This prevents gliding shelves within the main body part of the chamber from being moved outwardly thereof. It is known that some manufacturers of refrigerator cabinets have provided in the main food storage chamber of their cabinets rotatable or swinging shelves in order to overcome this embarrassment. The employment of rotatable or swinging shelves in refrigerator cabinets is a costly procedure due to waste of valuable food storage space therein by curved or rounded edges of the shelves and which storage space normally determines the retail price of a refrigerator cabinet of predetermined size. In addition, rotatable or swinging shelves in a refrigerator cabinet ordinarily require an upright supporting post or shaft within the food storage chamber thereof which is unsightly and frequently in the way of articles to be stored in the chamber. I contemplate the provision in a refrigerated chamber of a refrigerator cabinet of a shelf or food support that occupies the major part or substantially all of the cross-sectional area of the chamber and which is mounted therein for gliding movement in a straight-line direction to and fro the chamber without interference by a portion of the chamber door when same is swung open into a 90° position with respect to the refrigerator cabinet.

An object of my invention is to provide an improved shelf or article support arrangement within a cabinet.

Another object of my invention is to provide a novel mounting of a four-cornered shelf or food support within a rectangular refrigerator chamber of a generally rectangular cabinet which shelf or support is of a particular shape to occupy the major part of the cross-sectional area of the chamber and to cooperate with its mounting to be glided by rolling or sliding same in a straight-line direction outwardly of the chamber access opening with clearance at the side of the opening upon which the chamber door is hingedly secured.

A further object of my invention is to mount within a refrigerated chamber of a refrigerator cabinet a food shelf or support provided with diagonally opposite acute angled corners and diagonally opposite obtuse angled corners in such fashion that the shelf or support is movable in a straight-line direction outwardly of the chamber access opening and angularly relative thereto.

A still further and more specific object of my invention is to mount a parallelogram-shaped shelf or article support which has a front obtusely angled corner within a

chamber of a cabinet for straight-line movement outwardly thereof whereby the obtuse corner of the shelf or support spaces a part of the end thereof at the hinged side of the chamber door from the upright chamber wall thereat which spaced end part of the support clears and is shiftable along a projecting portion of the chamber door when the door is swung to a 90° open position with respect to the cabinet and during movement of the support to and fro the chamber.

Further objects and advantages of the present invention will be apparent from the following description, reference being had to the accompanying drawings wherein a preferred embodiment of the present invention is clearly shown.

In the drawings:

FIGURE 1 is a front view of a household refrigerator cabinet having a food or article support arranged in accordance with my invention located in a food storage chamber thereof and showing the chamber door open;

FIGURE 2 is an enlarged horizontal cross-sectional view taken along the lines 2—2 of FIGURE 1 with the chamber door closed and showing in plan my improved article support arrangement;

FIGURE 3 is a sectional view similar to FIGURE 2 on a reduced scale showing the refrigerator cabinet located in a corner of a room illustrating the cabinet door opened 90° and the article support moved part way out of the food storage chamber of the cabinet;

FIGURE 4 is an enlarged fragmentary sectional view taken along the lines 4—4 of FIGURE 2 showing the article support mounted on its mounting means.

Referring to the drawings, for illustrating my invention, I show in FIGURE 1 thereof a generally rectilinear-shaped cabinet 10 of the household refrigerator type. The refrigerator cabinet 10 includes an outer sheet metal shell 11 and an inner box-like metal liner 12 spaced from the shell and having any suitable or desirable insulating material 13 disposed therebetween (see FIGURE 2). Liner 12 forms rectangular walls of a polygonal-shaped food storage chamber 14 within cabinet 10 which is practical for maximum food storage space and wherein my invention is particularly applicable. Food storage chamber 14 is provided with an open front access opening which is normally closed by an insulated door structure generally represented by the reference character 15. The access opening of chamber 14 is bounded by nonmetallic breaker strips attached to the cabinet shell 11 and to the forward edge of chamber liner 12 as is conventional in the art. The insulated door structure 15 is hingedly secured to or mounted upon cabinet 10 by suitable hinges 16 for horizontal swinging movement relative thereto. Door 15 comprises an outer metal pan member 17 and an inner mold plastic panel member 18 with insulating material similar to the insulation 13 disposed therebetween (see FIGURE 2). Pan member 17 is provided with inturned flanges about the periphery thereof and these flanges are secured to peripheral edges of panel member 18 by suitable screws or the like which screws also lock a resilient gasket 19 upon door 15. The gasket 19 extends continuously around door 15 and this portion of the door is adapted to engage a flat forward surface on the front of cabinet 10 with the gasket air sealing the access opening of chamber 14. Molded plastic panel member 18 constitutes another portion of the door structure and is inwardly dished or recessed as at 21 to accommodate vertically spaced apart long, relatively narrow shelves 22 for supporting food products or articles in exposed relationship to the cold air within chamber 14. The portion 18 of door 15 projects inwardly of the surface on cabinet 10 engaged by gasket 19 into chamber 14 and forms an obstruction at the front of the chamber access opening when the door is swung only into a 90° open position.

LG0000407

A refrigerator system is associated with cabinet 10 and includes a refrigerant translating device (not shown) usually located in the lower part of the cabinet below chamber 14 and a refrigerant evaporator preferably of the pressure-welded sheet-metal type mounted in the food storage chamber. The refrigerant evaporator is located in the upper part of chamber 14 behind a door or closure member 25 separate from door 15 and cooperating with the evaporator to provide a freezing compartment within chamber 14. The cooling effect produced by the evaporator of the refrigerating system chills and causes circulation of air throughout the interior of chamber 14 as is conventional in the art to refrigerate and preserve food products or articles stored in the chamber. These food products may be located on the shelves 22 on door 15 and on reticulated article supports in the main body portion of chamber 14. At least one of the reticulated article supports in the main body portion of chamber 14 is arranged in accordance with my invention and is generally represented by the reference numeral 30. It is, of course, desirable to employ a four-cornered shelf or article support 30 and to mount same in chamber 14 for gliding movement outwardly thereof which shelf or support will occupy the major portion or substantially all of the cross-sectional area of rectangular chamber. The construction of article support 30 and its connection with rollable and slidable track means may, insofar as the present invention is concerned, be in accordance with that shown and fully described in my Patent No. 2,719,772, dated October 4, 1955, and assigned to the assignee of this application. However, the shape of the article support 30, its mounting within chamber 14 and the direction of movement thereof outwardly of the chamber is varied from that shown in my patent just identified in order to accomplish the objects and advantages of this invention.

In the present disclosure and with particular reference to FIGURE 2 of the drawings thereof it will be noted that I employ a four-cornered romboidal article support 30 which is of a parallelogram shape provided with diagonally opposite acute angled corners and diagonally opposite obtuse angled corners. I mount the article support 30 within chamber 14 so that it has gliding movement in a straight-line direction outwardly thereof and angularly through the chamber access opening relative to the rectangular chamber walls. For this purpose I utilize opposed molded plastic blocks 31 having inclined or acute angled inner surfaces for the mounting thereto of fixed rollers 32 which support a track member 33 rollably interlocked with the rollers as in my patent hereinbefore referred to. The opposed blocks 31 are rigidly secured, by screws or bolts 34 (see FIGURE 4) to the opposite upright walls of liner 12 of chamber 14 so as to dispose each pair of rollers 32 and consequently the track members 33 and article support 30 at an acute angle within the rectangular chamber relative to its right angled walls. This mounts the four-cornered parallelogram-shaped article support 30 within chamber 14 for straight-line gliding movement outwardly thereof through its front access opening angularly relative thereto and to the right-angled walls of the rectangular chamber.

In FIGURE 3 I show the refrigerator cabinet 10 located in a corner of a room or kitchen, indicated by the right-angled walls 37 and 38, with its back and right-hand upright wall substantially abutting or positioned closely adjacent these room walls respectively. In this showing the front obtuse angled corner of article support 30 spaces the forward portion of the end of support 30 at the hinged side of door 15 a greater distance inwardly of the upright chamber wall 12 thereat than the rear portion of the support. Door 15, with the cabinet 10 located as shown adjacent the room walls 37 and 38, can be swung only into a 90° open position relative to the cabinet and the projecting portion 18 of door 15, normally extending into chamber 14, now lies or is located in front of a part of the chamber access opening and forms an obstruction thereat. Such obstructions would prevent a shelf or article support movably mounted in chamber 14 from being shifted outwardly thereof and the feature of rendering food products on the rear portion of the article support readily accessible at the front of the refrigerator cabinet without reaching to the rear of the chamber therein will be eliminated when the refrigerator is located as illustrated in FIGURE 3. However, this feature is retained in a novel and practical manner by virtue of my invention. For example, a forward pull applied to article support 30 will move or glide it out of chamber 14 in a straight-line direction and at an angle to the right-angled chamber walls as distinguished from moving the shelf outwardly of the chamber in parallel relation to walls thereof. Movement of support 30 at an angle with respect to the chamber simultaneously with the outward movement thereof shifts that portion of the support moved out of the chamber access opening laterally relative thereto. The front portion of the end of article support 30 at the obtuse angled forward corner thereof adjacent the hinge side of door 15, in addition to normally being spaced from the upright wall of chamber 14 thereat, becomes further spaced therefrom during movement of the support outwardly of the chamber and angularly relative to its access opening. This end portion of support 30 consequently clears or is shifted to the left, as viewed in FIGURE 3, of projecting portion 18 on door 15 located in its 90° open position, against or aligned with room wall 38, when the shelf is moved part way out of cabinet 10 forwardly of chamber 14 to thereby prevent door portion 18 from obstructing or blocking the outward gliding movement of the article support. Thus the combination of a parallelogram-shaped article support with its diagonally opposite acute angled corners and diagonally opposite obtuse angled corners together with the mounting thereof at an acute angle relative to walls of a rectangular food storage chamber in a refrigerator cabinet accomplishes a result which permits retention of the feature and advantages of an outwardly movable refrigerator cabinet shelf or support.

It should from the foregoing, be apparent that I have made an improvement in cabinets having outwardly movable article supports therein and have solved the problem encountered particularly in the installation and use of refrigerator cabinets. By a shelf or support being shaped as herein disclosed and mounting same in a food storage chamber of a refrigerator cabinet for movement outwardly thereof in the unique manner described, I provide a refrigerator which can be located in corners of a room or adjacent other cabinets or cupboards wherein the cabinet door can be opened only at a 90° angle relative to the cabinet without depriving the user of the refrigerator of features incorporated therein. In accomplishing this with a four-cornered article support or shelf, the waste space in a refrigerated chamber of a refrigerator cabinet is reduced to an infinitesimal amount which is not a serious or costly expedient and is more practical and less expensive than providing rotating or swinging food shelves or article supports in refrigerators.

While the embodiment of the present invention as herein disclosed constitutes a preferred form, it is to be understood that other forms might be adopted.

What is claimed it as follows:

1. A cabinet comprising in combination, a plurality of walls forming a chamber in said cabinet provided with a front access opening, a door hingedly secured to said cabinet at one side of the chamber opening, said door being engageable with a forward surface of said cabinet about said chamber opening and including a portion projecting therefrom inwardly into the chamber beyond said surface, an article support in said chamber occupying substantially all of the horizontal cross-sectional area thereof intermediate said projecting portion of said door and walls of the chamber, means mounting said support within said chamber for gliding movement in a straight-line direction outwardly thereof through its access opening

LG0000408

while mounted on said mounting means, said door being swingable into at least a 90° open position with respect to said cabinet whereby said projecting portion of the door is located in front of said chamber opening in the path of straight-line movement of said support therethrough, the front part of the end of said article support adjacent said one side of the chamber opening being spaced inwardly from the upright chamber wall thereat, and said spaced end part of said support clearing and being shiftable along said projecting portion of said door at said 90° open position thereof upon moving the support to and fro said chamber.

2. The combination defined by claim 1 wherein the mounting means for the article support is disposed at an acute angle with respect to walls of the chamber and causes the straight-line movement of said support through the chamber opening to be angular relative thereto.

3. A cabinet comprising in combination, a plurality of walls forming a chamber in said cabinet provided with a front access opening, a door hingedly secured to said cabinet at one side of the chamber opening, said door being engageable with a forward surface of said cabinet about said chamber opening and including a portion projecting therefrom inwardly into the chamber beyond said surface, an article support in said chamber occupying substantially all of the horizontal cross-sectional area thereof intermediate said projecting portion of said door and walls of the chamber, said support being provided with diagonally opposite arcuate angled corners and diagonally opposite obtuse angled corners, means mounting said support within said chamber for gliding movement in a straight-line direction outwardly thereof through its access opening while mounted on said mounting means, said door being swingable into at least a 90° open position with respect to said cabinet whereby said projecting portion of the door is located in front of said chamber opening in the path of straight-line movement of said support therethrough, one of the obtuse angled corners of said article support being located adjacent said one side of the chamber opening and spacing the front part of the end of the support thereat inwardly from the upright chamber wall at the hinged side of said door, and said spaced end part of said support clearing and being shiftable along said projecting portion of said door at said 90° open position thereof upon moving the support to and fro said chamber.

4. The combination defined by claim 3 wherein the mounting means for the article support is disposed at an acute angle with respect to walls of the chamber and causes the straight-line movement of said support through the chamber opening to be angular relative thereto.

5. A cabinet comprising in combination, a plurality of walls defining a chamber in said cabinet, said chamber being provided with an access opening in an upright wall thereof, a door hingedly secured to said cabinet at one side of the chamber opening, said door being engageable with a surface of said cabinet about said chamber access opening and including a part thereon projecting therefrom inwardly into the chamber beyond said surface, a four cornered article support in said chamber occupying a horizontal cross-sectional area thereof intermediate said projecting part of said door and walls of the chamber, means mounting said support within said chamber for movement in a straight-line direction part way out of the chamber through its access opening while mounted on said mounting means, said door being swingable into a 90° open position with respect to said cabinet whereby said projecting part of the door is located in front of a portion of said chamber opening in the path of movement of said article support therethrough, a front corner of the end of said article support adjacent said one side of the chamber opening being obtusely angled, and said obtuse front corner on said article support serving to cause said end thereof to clear and be shifted past said projecting part of said door at its said 90° open position

in a lateral direction away from said one chamber side as the support is moved outwardly of the chamber.

6. The combination defined by claim 5 wherein the mounting means for the article support is disposed at an acute angle with respect to sides of the chamber whereby the straight-line movement of said support through the chamber opening is angular relative thereto.

7. A cabinet comprising in combination, a plurality of walls defining a rectangular chamber in said cabinet, said chamber being provided with an access opening in the front wall of said cabinet, a door hingedly secured to said cabinet at one side of the chamber opening, said door being engageable with said front wall of the cabinet and including a part thereon normally projecting therefrom inwardly into said chamber beyond the cabinet front wall, an article support in said chamber occupying the major portion of a horizontal cross-section area thereof intermediate said projecting part of said door and upright walls of the rectangular chamber, said support being provided with diagonally opposite obtuse angled corners and diagonally opposite acute angled corners, means mounting said article support within said chamber for movement in a straight-line direction part way out of the chamber through its opening in said cabinet front wall while mounted on said mounting means, said door being swingable into a 90° open position with respect to said cabinet whereby said projecting part of the door is located in front of a portion of said chamber opening in the path of movement of said article support therethrough, the obtuse angled corner at the front of said article support being adjacent said one side of the chamber opening, and outward movement of said article support through the chamber opening being angularly relative to the rectangular chamber walls to cause the end of said support adjacent said obtusely angled front corner thereof to clear and be shifted past said projecting part of said door at its said 90° open position.

8. A cabinet comprising in combination, a plurality of walls defining a chamber in said cabinet, said chamber being provided with an access opening in an upright wall thereof, a door hingedly secured to said cabinet at one side of the chamber opening, said door being engageable with a surface of said cabinet about said chamber access opening and including a part thereon projecting therefrom inwardly into the chamber beyond said surface, a parallelogram shaped article support in said chamber occupying a horizontal cross-sectional area thereof intermediate said projecting part of said door and walls of the chamber, means mounting said support within said chamber for movement in a straight-line direction part way out of the chamber through its access opening while mounted on said mounting means, said door being swingable into a 90° open position with respect to said cabinet whereby said projecting part of the door is located in front of a portion of said chamber opening in the path of movement of said article support therethrough, the front corner of the end of said parallelogram shaped article support adjacent said one side of the chamber opening being obtusely angled, and said obtuse front corner on said article support serving to cause said end thereof to clear and be shifted past said projecting part of said door at its said 90° open position as the support is moved outwardly of the chamber.

9. The combination defined by claim 8 wherein the mounting means for the parallelogram shaped article support is disposed at an acute angle with respect to sides of the chamber whereby the straight-line outward movement of said support through the chamber opening is angular relative thereto away from the one side of said chamber.

10. A cabinet comprising in combination, a plurality of walls defining a rectilinear shaped chamber in said cabinet, said chamber being provided with an access opening in an upright wall thereof, a door hingedly secured to said cabinet at one side of the chamber open-

LG0000409

ing, said door being engageable with a surface of said cabinet bounding said chamber access opening and including a portion thereon swingable therewith projecting therefrom into the chamber beyond said surface, a four-cornered article support in said chamber occupying a horizontal cross-sectional area thereof intermediate said projecting portion of said door and walls of the chamber, means mounting said support within said chamber for movement in a straight-line direction part way out of the chamber through its access opening while mounted on said mounting means, said door being swingable into a predetermined open position relative to said cabinet in which position of the door said projecting portion thereof extends inwardly of said one side of the chamber at the front of its access opening, a front corner of the end of said article support adjacent said one side of the chamber being obtusely angled, and said obtuse front corner of said article support serving to cause at least the forward part of said end thereof to clear and be shifted past the projecting portion of said door while same is in said predetermined open position as the support is moved outwardly of said chamber.

11. The combination defined by claim 10 wherein the mounting means for the article support is disposed at an acute angle with respect to sides of the rectilinear chamber whereby the straight-line movement of said support through the chamber opening is angular relative thereto.

References Cited in the file of this patent

UNITED STATES PATENTS

2,670,479	Gottlieb	Mar. 2, 1954
2,840,438	Sharpe	June 24, 1958
2,840,439	Sharpe	June 24, 1958

LG0000410

CERTAIN REFRIGERATORS AND COMPONENTS THEREOF **Inv. No. 337-TA-632**

CERTIFICATE OF SERVICE

I, Bilal Iddinn, hereby certify that on April 14, 2008, copies of the foregoing document were filed an served upon the following parties as indicated:

Ms. Marilyn R. Abbott, Secretary
U.S. INTERNATIONAL TRADE COMMISSION
500 E Street, SW Room 116
Washington, DC 20436
(Original and 6 Copies)

- ☐ Via First Class Mail
- ☒ Via Hand Delivery
- ☐ Via Overnight Courier
- ☐ Via Facsimile
- ☐ Via Electronic Filing

Honorable Theodore Essex
Administrative Law Judge
U.S. INTERNATIONAL TRADE COMMISSION
500 E. Street, S.W.
Washington, D.C. 20436
(2 Copies)
Email Service: tamara.lee@usitc.gov

- ☐ Via First Class Mail
- ☒ Via Hand Delivery
- ☐ Via Overnight Courier
- ☐ Via Facsimile
- ☐ Via Electronic Mail

Rett Snotherly, Esq.
Office of Unfair Import Investigations
U.S. INTERNATIONAL TRADE COMMISSION
500 E. Street, S.W., Room 401
Washington, D.C. 20436

- ☐ Via First Class Mail
- ☒ Via Hand Delivery
- ☐ Via Overnight Courier
- ☐ Via Facsimile
- ☐ Via Electronic Mail

COUNSEL FOR COMPLAINANTS

Kristiana Brugger, Esq.
BAKER BOTTS LLP
1299 Pennsylvania Avenue, N.W.
Washington, D.C. 20004-2400
(202) 639-7700 (Telephone)
(202) 639-7690 (Facsimile)
kristiana.brugger@bakerbotts.com

- ☐ Via First Class Mail
- ☒ Via Hand Delivery
- ☐ Via Overnight Courier
- ☐ Via Facsimile
- ☒ Via Electronic Mail

CERTAIN REFRIGERATORS AND COMPONENTS THEREOF **Inv. No. 337-TA-632**

COUNSEL FOR COMPLAINANTS

Scott F. Patridge, Esq.
Paul R. Morico, Esq.
Amanda Woodall, Esq.
Elizabeth Durham, Esq.
Robinson.Vu Esq.
Ryan Pinckney Esq.
Susan.Bigler
BAKER BOTTS LLP
One Shell Plaza
910 Louisiana Street
Houston, TX 77002
P-713-229-1569
F-713-229-7769
scott.partridge@bakerbotts.com
paul.morico@bakerbotts.com
amanda.woodall@bakerbotts.com
elizabeth.durham@bakerbotts.com
robinson.vu@bakerbotts.com
ryan.pinckney@bakerbotts.com
susan.bigler@bakerbotts.com

☐ Via First Class Mail
☐ Via Hand Delivery
☒ Via Overnight Courier
☐ Via Facsimile
☒ Via Electronic Mail

Bilal Iddinn
FINNEGAN, HENDERSON, FARABOW, GARRETT & DUNNER, L.L.P.
901 New York Avenue, NW
Washington, DC 20001
(202) 408-4000 (Telephone)
(202) 408-4400 (Facsimile)