IN THE UNITED STATES DISTRICT COURT
FOR THE DISTRICT OF DELAWARE

FLASHPOINT TECHNOLOGY, INC.,	§	
	§	
Plaintiff,	§	
	§	
v.	§	
	§	
AT&T MOBILITY, LLC, D/B/A CINGULAR WIRELESS,	§	Civil Action No. _____
HTC AMERICA, INC.,	§	
HTC CORP.,	§	**JURY TRIAL DEMANDED**
KYOCERA WIRELESS CORP.,	§	
KYOCERA CORP.,	§	
LG ELECTRONICS USA, INC.,	§	
LG ELECTRONICS, INC.,	§	
MOTOROLA, INC.,	§	
NOKIA, INC.,	§	
NOKIA CORP.,	§	
PALM, INC.,	§	
RESEARCH IN MOTION CORP.,	§	
RESEARCH IN MOTION LTD.,	§	
SPRINT SPECTRUM L.P., D/B/A SPRINT PCS,	§	
T-MOBILE USA, INC.,	§	
and	§	
CELLCO PARTNERSHIP, D/B/A VERIZON WIRELESS,	§	
	§	
Defendants.	§	

PLAINTIFF'S ORIGINAL COMPLAINT FOR PATENT INFRINGEMENT

Plaintiff FlashPoint Technology, Inc. ("Plaintiff" or "FlashPoint"), by and through its undersigned counsel, files this Original Complaint against AT&T Mobility, LLC, d/b/a Cingular Wireless, HTC America Inc., HTC Corp., Kyocera Wireless Corp., Kyocera Corp., LG Electronics USA, Inc., LG Electronics, Inc., Motorola Inc., Nokia, Inc., Nokia Corp., Palm, Inc., Research in Motion Corp., Research in Motion Ltd. Sprint Spectrum L.P., d/b/a Sprint PCS, T-

Mobile USA, Inc., and Cellco Partnership, d/b/a Verizon Wireless (collectively "Defendants") as follows:

NATURE OF THE ACTION

1. This is a patent infringement action to stop each Defendant's infringement of FlashPoint's United States Patent No. 6,118,480 entitled "Method and Apparatus for Integrating a Digital Camera User Interface Across Multiple Operating Modes" (the "'480 patent"; a copy of which is attached hereto as Exhibit 1), United States Patent No. 6,177,956 entitled "System and Method for Correlating Processing Data and Image Data within a Digital Camera Device" (the "'956 patent"; a copy of which is attached hereto as Exhibit 2), United States Patent No. 6,222,538 entitled "Directing Image Capture Sequences in a Digital Imaging Device Using Scripts" (the "'538 patent"; a copy of which is attached hereto as Exhibit 3), United States Patent No. 6,223,190 entitled "Method and System for Producing an Internet Page Description File on a Digital Imaging Device" (the "'190 patent"; a copy of which is attached hereto as Exhibit 4), United States Patent No. 6,249,316 entitled "Method and System for Creating a Temporary Group of Images on a Digital Camera" (the "'316 patent"; a copy of which is attached hereto as Exhibit 5), United States Patent No. 6,486,914 entitled "Method and System for Controlling User Interaction in a Digital Imaging Device Using Dynamic Overlay Bars" (the "'914 patent"; a copy of which is attached hereto as Exhibit 6), and United States Patent No. 6,504,575 entitled "Method and System for Displaying Overlay Bars in a Digital Imaging Device" (the "'575 patent"; a copy of which is attached hereto as Exhibit 7). The '480, '956, '538, '190, '316, '914 and '575 patents may be collectively referred to herein as the "patents-in-suit." FlashPoint is the legal owner of the patents-in-suit. FlashPoint seeks injunctive relief and monetary damages.

PARTIES

2. Plaintiff FlashPoint Technology, Inc. is a corporation organized and existing under the laws of the State of Delaware. FlashPoint maintains its principal place of business at 20 Depot Street, Suite 2A, Peterborough, New Hampshire 03458. FlashPoint is the legal owner of the patents-in-suit, and possesses all rights of recovery under the patents-in-suit, including the right to sue for infringement and recover past damages.

3. Upon information and belief, Defendant AT&T Mobility, LLC, d/b/a Cingular Wireless, LLC ("AT&T") is a corporation organized and existing under the laws of the State of Delaware, with its principal place of business located at 5565 Glenridge Connector, Atlanta, Georgia 30342.

4. Upon information and belief, Defendant HTC America, Inc. ("HTC America") is a corporation organized and existing under the laws of the State of Texas, with its principal place of business located at 13920 Southeast Eastgate Way, Suite 400, Bellevue, Washington 98005.

5. Upon information and belief, Defendant HTC Corp. ("HTC Corp.") is a corporation organized and existing under the laws of Taiwan, with its principal place of business located at 23 Hsin Hua Road, Taoyuan 330, Taiwan, R.O.C.

6. Upon information and belief, Defendant Kyocera Wireless Corp. ("Kyocera Wireless") is a corporation organized and existing under the laws of the State of Delaware, with its principal place of business located at 10300 Campus Point Drive, San Diego, California 92121.

7. Upon information and belief, Defendant Kyocera Corp. ("Kyocera Corp."), the parent of Kyocera, is a corporation organized and existing under the laws of Japan, with its

principal place of business located at 6 Takeda Tabadono-Cho, Fushimi-Ku Kyoto 612-8501, Japan.

8. Upon information and belief, Defendant LG Electronics USA, Inc. ("LG") is a corporation organized and existing under the laws of the State of Delaware, with its principal place of business located at 1000 Sylvan Avenue, Englewood Cliffs, New Jersey 07632.

9. Upon information and belief, Defendant LG Electronics, Inc. ("LG Electronics") the parent of LG, is a corporation organized and existing under the laws of Korea with its principal place of business located at LG Twin Towers, 20 Yeouido-dong, Yeongdeungpo-gu, Seoul, 150-721, Korea.

10. Upon information and belief, Defendant Motorola, Inc. ("Motorola") is a corporation organized and existing under the laws of the State of Delaware, with its principal place of business located at 1303 E. Algonquin Road, Schaumburg, Illinois 60196.

11. Upon information and belief, Defendant Nokia, Inc. ("Nokia") is a corporation organized and existing under the laws of the State of Delaware, with its principal place of business located at 6000 Connection Drive, Mail Drop 1-8-931, Irving, Texas 75039.

12. Upon information and belief, Defendant Nokia Mobile Corp. ("Nokia Mobile") is a corporation organized and existing under the laws of Finland, with its principal place of business located at Keilalahdentie 2-4, P.O. Box 226, FIN-00045 Nokia Group Finland.

13. Upon information and belief, Defendant Palm, Inc. ("Palm") is a corporation organized and existing under the laws of the State of Delaware, with its principal place of business located at 950 West Maude Avenue, Sunnyvale, California 94085.

14. Upon information and belief, Defendant Research in Motion Corp. ("RIM Corp.") is a corporation organized and existing under the laws of the State of Delaware, with its principal place of business located at 122 West John Carpenter Parkway, Irving, Texas 75039.

15. Upon information and belief, Defendant Research in Motion Ltd. ("RIM Ltd.") is a corporation organized and existing under the laws of Canada, with its principal place of business located at 295 Phillips Street, Waterloo, Ontario, Canada N2L 3W8.

16. Upon information and belief, Defendant Sprint Spectrum L.P., d/b/a Sprint PCS, ("Sprint") is a limited partnership organized and existing under the laws of the state of Delaware, with its principal place of business located at 6500 Sprint Parkway, HL-5ASTX, Overland Park, Kansas 66251.

17. Upon information and belief, Defendant T-Mobile USA, Inc. ("T-Mobile") is a corporation organized and existing under the laws of the state of Delaware, with its principal place of business located at 12920 SE 38th Street, Bellevue, Washington 98006.

18. Upon information and belief, Defendant Cellco Partnership, d/b/a Verizon Wireless ("Verizon") is a corporation organized and existing under the laws of the state of Delaware, with its principal place of business located at 1 Verizon Way, Basking Ridge, New Jersey 07920.

JURISDICTION AND VENUE

19. This action arises under the Patent Laws of the United States, 35 U.S.C. § 1 *et seq.*, including 35 U.S.C. §§ 271, 281-285. This Court has subject matter jurisdiction over this case for patent infringement under 28 U.S.C. §§ 1331 and 1338(a).

20. Upon information and belief, Defendants have transacted business and committed acts of infringement within the State of Delaware, and the District of Delaware, and are subject to the personal jurisdiction of this Court.

21. Upon information and belief, Defendants have offered for sale, imported, or sold electronic products capable of being used, *inter alia*, to capture, process and view digital images in this District.

22. Venue is proper in this District pursuant to 28 U.S.C. §§ 1391 and 1400(b).

23. Defendants reside in this District for the purposes of venue, insofar as they are subject to the personal jurisdiction in this District, have committed acts of infringement in this District, solicit business in this District, provide services in this District, encourage others to practice infringing methods in this District, and conduct other business in this District.

COUNT I – PATENT INFRINGEMENT

24. On September 12, 2000, the United States Patent and Trademark Office duly and legally issued the ‘480 patent to FlashPoint, as assignee of the inventors Eric C. Anderson, Steve Saylor, and Amanda R. Mander. The ‘480 patent is in full force and effect. FlashPoint is the legal owner of the ‘480 patent and possesses all rights of recovery under the ‘480 patent.

25. On January 23, 2001, the United States Patent and Trademark Office duly and legally issued the ‘956 patent to FlashPoint, as assignee of the inventors Eric C. Anderson and Mike M. Masukawa. The ‘956 patent is in full force and effect. FlashPoint is the legal owner of the ‘956 patent and possesses all rights of recovery under the ‘956 patent.

26. On April 24, 2001, the United States Patent and Trademark Office duly and legally issued the ‘538 patent to FlashPoint, as assignee of the inventor Eric C. Anderson. The

‘538 patent is in full force and effect. FlashPoint is the legal owner of the ‘538 patent and possesses all rights of recovery under the ‘538 patent.

27. On April 24, 2001, the United States Patent and Trademark Office duly and legally issued the ‘190 patent to FlashPoint, as assignee of the inventors Tim Takao Aihara and Rodney Somerstein. The ‘190 patent is in full force and effect. FlashPoint is the legal owner of the ‘190 patent and possesses all rights of recovery under the ‘190 patent.

28. On June 19, 2001, the United States Patent and Trademark Office duly and legally issued the ‘316 patent to FlashPoint, as assignee of the inventor Eric C. Anderson. The ‘316 patent is in full force and effect. FlashPoint is the legal owner of the ‘316 patent and possesses all rights of recovery under the ‘316 patent.

29. On November 26, 2002, the United States Patent and Trademark Office duly and legally issued the ‘914 patent to FlashPoint, as assignee of the inventor Eric C. Anderson. The ‘914 patent is in full force and effect. FlashPoint is the legal owner of the ‘914 patent and possesses all rights of recovery under the ‘914 patent.

30. On January 7, 2003, the United States Patent and Trademark Office duly and legally issued the ‘575 patent to FlashPoint, as assignee of the inventors Michael A. Ramirez and Eric C. Anderson. The ‘575 patent is in full force and effect. FlashPoint is the legal owner of the ‘575 patent and possesses all rights of recovery under the ‘575 patent.

31. In 1996, FlashPoint was founded as a spin-off of the Imaging Division of Apple Computer, Inc. (“Apple”). FlashPoint continued the research and development of the core technologies started at Apple, and perfected such technologies.

32. Those technologies, protected by the patents-in-suit, enable users to, among other things, capture, process and view digital images.

33. The marketplace has long recognized the value of FlashPoint's inventions, including the patents-in-suit. Licensees include Canon Inc., Casio Computer Co., Ltd., Concord Camera Corp., Seiko Epson Corp., Fuji Photo Film Co., Ltd., Hewlett-Packard Co., Eastman Kodak Co., Konica Corp., Matsushita Electric Industrial Co., Minolta Co., Ltd., Pentax Corp., Ricoh Corp., Samsung Techwin Co., Ltd., Sanyo Electric Co., Ltd., Sharp Corp., Toshiba Corp., and Vivitar Corp.

34. Digital image devices have been integrated into cellular telephones for several years. Today, digital image devices are commonplace in a wide variety of Defendants' cellular telephones.

35. Upon information and belief, each Defendant practices inventions covered by one or more of the patents-in-suit.

36. Upon information and belief, AT&T has infringed and continues to infringe one or more claims of the patents-in-suit by making, using, importing, providing, offering to sell, and selling (directly or through intermediaries) infringing products and/or services, in this District and elsewhere in the United States. Upon information and belief, AT&T has also contributed to the infringement of one or more claims of the patents-in-suit, and/or actively induced others to infringe one or more claims of the patents-in-suit, in this District and elsewhere in the United States.

37. Upon information and belief, HTC America has infringed and continues to infringe one or more claims of the patents-in-suit by making, using, importing, providing, offering to sell, and selling (directly or through intermediaries) infringing products, in this District and elsewhere in the United States. Upon information and belief, HTC America has also contributed to the infringement of one or more claims of the patents-in-suit and/or actively

induced others to infringe one or more claims of the patents-in-suit in this District and elsewhere in the United States.

38. Upon information and belief, HTC Corp. has infringed and continues to infringe one or more claims of the patents-in-suit by making, using, importing, providing, offering to sell, and selling (directly or through intermediaries) infringing products, in this District and elsewhere in the United States. Upon information and belief, HTC Corp. has also contributed to the infringement of one or more claims of the patents-in-suit and/or actively induced others to infringe one or more claims of the patents-in-suit in this District and elsewhere in the United States.

39. Upon information and belief, Kyocera Wireless has infringed and continues to infringe one or more claims of the patents-in-suit by making, using, importing, providing, offering to sell, and selling (directly or through intermediaries) infringing products, in this District and elsewhere in the United States. Upon information and belief, Kyocera Wireless has also contributed to the infringement of one or more claims of the patents-in-suit and/or actively induced others to infringe one or more claims of the patents-in-suit in this District and elsewhere in the United States.

40. Upon information and belief, Kyocera Corp. has infringed and continues to infringe one or more claims of the patents-in-suit by making, using, importing, providing, offering to sell, and selling (directly or through intermediaries) infringing products, in this District and elsewhere in the United States. Upon information and belief, Kyocera Corp. has also contributed to the infringement of one or more claims of the patents-in-suit and/or actively induced others to infringe one or more claims of the patents-in-suit in this District and elsewhere in the United States.

41. Upon information and belief, LG has infringed and continues to infringe one or more claims of the patents-in-suit by making, using, importing, providing, offering to sell, and selling (directly or through intermediaries), infringing products in this District and elsewhere in the United States. Upon information and belief, LG has also contributed to the infringement of one or more claims of the patents-in-suit and/or actively induced others to infringe one or more claims of the patents-in-suit in this District and elsewhere in the United States.

42. Upon information and belief, LG Electronics has infringed and continues to infringe one or more claims of the patents-in-suit by making, using, importing, providing, offering to sell, and selling (directly or through intermediaries) infringing products, in this District and elsewhere in the United States. Upon information and belief, LG Electronics has also contributed to the infringement of one or more claims of the patents-in-suit and/or actively induced others to infringe one or more claims of the patents-in-suit in this District and elsewhere in the United States.

43. Upon information and belief, Motorola has infringed and continues to infringe one or more claims of the patents-in-suit by making, using, importing, providing, offering to sell, and selling (directly or through intermediaries) infringing products, in this District and elsewhere in the United States. Upon information and belief, Motorola has also contributed to the infringement of one or more claims of the patents-in-suit and/or actively induced others to infringe one or more claims of the patents-in-suit in this District and elsewhere in the United States.

44. Upon information and belief, Nokia has infringed and continues to infringe one or more claims of the patents-in-suit by making, using, importing, providing, offering to sell, and selling (directly or through intermediaries) infringing products, in this District and elsewhere in

the United States. Upon information and belief, Nokia has also contributed to the infringement of one or more claims of the patents-in-suit and/or actively induced others to infringe one or more claims of the patents-in-suit in this District and elsewhere in the United States.

45. Upon information and belief, Nokia Mobile has infringed and continues to infringe one or more claims of the patents-in-suit by making, using, importing, providing, offering to sell, and selling (directly or through intermediaries) infringing products, in this District and elsewhere in the United States. Upon information and belief, Nokia Mobile has also contributed to the infringement of one or more claims of the patents-in-suit and/or actively induced others to infringe one or more claims of the patents-in-suit in this District and elsewhere in the United States.

46. Upon information and belief, Palm has infringed and continues to infringe one or more claims of the patents-in-suit by making, using, importing, providing, offering to sell, and selling (directly or through intermediaries) infringing products, in this District and elsewhere in the United States. Upon information and belief, Palm has also contributed to the infringement of one or more claims of the patents-in-suit and/or actively induced others to infringe one or more claims of the patents-in-suit in this District and elsewhere in the United States.

47. Upon information and belief, RIM Corp. has infringed and continues to infringe one or more claims of the patents-in-suit by making, using, importing, providing, offering to sell, and selling (directly or through intermediaries) infringing products, in this District and elsewhere in the United States. Upon information and belief, RIM Corp. has also contributed to the infringement of one or more claims of the patents-in-suit and/or actively induced others to infringe one or more claims of the patents-in-suit in this District and elsewhere in the United States.

48. Upon information and belief, RIM Ltd. has infringed and continues to infringe one or more claims of the patents-in-suit by making, using, importing, providing, offering to sell, and selling (directly or through intermediaries) infringing products, in this District and elsewhere in the United States. Upon information and belief, RIM Ltd. has also contributed to the infringement of one or more claims of the patents-in-suit and/or actively induced others to infringe one or more claims of the patents-in-suit in this District and elsewhere in the United States.

49. Upon information and belief, Sprint has infringed and continues to infringe one or more claims of the patents-in-suit by making, using, importing, providing, offering to sell, and selling (directly or through intermediaries) infringing products and/or services, in this District and elsewhere in the United States. Upon information and belief, Sprint has also contributed to the infringement of one or more claims of the patents-in-suit and/or actively induced others to infringe one or more claims of the patents-in-suit in this District and elsewhere in the United States.

50. Upon information and belief, T-Mobile has infringed and continues to infringe one or more claims of the patents-in-suit by making, using, importing, providing, offering to sell, and selling (directly or through intermediaries) infringing products and/or services, in this District and elsewhere in the United States. Upon information and belief, T-Mobile has also contributed to the infringement of one or more claims of the patents-in-suit and/or actively induced others to infringe one or more claims of the patents-in-suit in this District and elsewhere in the United States.

51. Upon information and belief, Verizon has infringed and continues to infringe one or more claims of the patents-in-suit by making, using, importing, providing, offering to sell, and

selling (directly or through intermediaries) infringing products and/or services, in this District and elsewhere in the United States. Upon information and belief, Verizon has also contributed to the infringement of one or more claims of the patents-in-suit and/or actively induced others to infringe one or more claims of the patents-in-suit in this District and elsewhere in the United States.

52. Each Defendant's aforesaid activities have been without authority and/or license from FlashPoint.

53. FlashPoint is entitled to recover from the Defendants the damages sustained by FlashPoint as a result of the Defendants' wrongful acts in an amount subject to proof at trial.

54. Upon information and belief, the infringement of one or more claims of the patents-in-suit by Kyocera Wireless and Kyocera Corp. is willful and deliberate. Upon information and belief, the inducement and contributory infringement of one or more claims of the patents-in-suit by Kyocera Wireless and Kyocera Corp. is willful and deliberate. As a result, Flashpoint is entitled to increased damages under 35 U.S.C. § 284 and to attorneys' fees and costs incurred in prosecuting this action under 35 U.S.C. § 285 with respect to these defendants.

55. Defendants' infringement of Flashpoint's exclusive rights under the one or more of the patents-in-suit will continue to damage Flashpoint, causing irreparable harm for which there is no adequate remedy at law, unless enjoined by this Court.

JURY DEMAND

56. Plaintiff demands a trial by jury on all issues.

PRAYER FOR RELIEF

Plaintiff FlashPoint Technology, Inc. respectfully requests the following relief:

A. An adjudication that the Defendants have infringed and continue to infringe claims of one or more of the patents-in-suit;

B. An award to Flashpoint of damages adequate to compensate Flashpoint for the Defendants' acts of infringement together with prejudgment interest;

C. An award of enhanced damages, up to and including trebling of Flashpoint damages pursuant to 35 U.S.C. § 284 for willful infringement by Kyocera Wireless and Kyocera Corp.;

D. An award of Flashpoint's costs of suit and reasonable attorneys' fees pursuant to 35 U.S.C. § 285 due to the exceptional nature of this case, or as otherwise permitted by law with respect to Kyocera Wireless and Kyocera Corp.;

E. A grant of permanent injunction pursuant to 35 U.S.C. § 283, enjoining the Defendants from further acts of (1) infringement, (2) contributory infringement, and (3) actively inducing infringement with respect to the claims of one or more of the patents-in-suit; and

F. Any further relief that this Court deems just and proper.

Dated: March 7, 2008

Respectfully submitted,

/s/ David Margules

David Margules
Delaware Bar No. 2254
E-mail: dmargules@bmf-law.com
BOUCHARD MARGULES & FRIEDLANDER, P.A.
222 Delaware Avenue
Suite 1400

Wilmington, Delaware 19801
Telephone: (302) 573-3500
Facsimile: (302) 573-3501

OF COUNSEL:
Patrick J. Coughlin, Esq.
E-mail: patc@csgrr.com
Michael J. Dowd, Esq.
E-mail: miked@csgrr.com
Ray A. Mandlekar, Esq.
E-mail: rmandlekar@csgrr.com
COUGHLIN STOIA GELLER RUDMAN ROBBINS LLP
655 West Broadway, Suite 1900
San Diego, California 92101
Telephone: (619) 231-1058
Facsimile: (619) 231-7423

John F. Ward, Esq.
E-mail: wardj@wardolivo.com
John W. Olivo, Jr., Esq.
E-mail: olivoj@wardolivo.com
David M. Hill, Esq.
E-mail: hilld@wardolivo.com
WARD & OLIVO
380 Madison Avenue
New York, New York 10017
Telephone: (212) 697-6262
Facsimile: (212) 972-5866

Attorneys for Plaintiff FlashPoint Technology, Inc.

EXHIBIT 1

US006118480A

United States Patent [19]

Anderson et al.

[11] **Patent Number: 6,118,480**

[45] **Date of Patent: *Sep. 12, 2000**

[54] **METHOD AND APPARATUS FOR INTEGRATING A DIGITAL CAMERA USER INTERFACE ACROSS MULTIPLE OPERATING MODES**

[75] Inventors: **Eric C. Anderson**, San Jose; **Steve Saylor**, Morgan Hill; **Amanda R. Mander**, Palo Alto, all of Calif.

[73] Assignee: **FlashPoint Technology, Inc.**, San Jose, Calif.

[*] Notice: This patent issued on a continued prosecution application filed under 37 CFR 1.53(d), and is subject to the twenty year patent term provisions of 35 U.S.C. 154(a)(2).

[21] Appl. No.: **08/851,667**

[22] Filed: **May 6, 1997**

[51] **Int. Cl.**[7] **H04N 5/222**

[52] **U.S. Cl.** **348/207**

[58] **Field of Search** 348/333, 334, 348/373, 375, 376, 552, 232, 233, 211, 231, 222, 207, 239; 358/906, 909.1

[56] **References Cited**

U.S. PATENT DOCUMENTS

4,935,809	6/1990	Hayashi et al.	358/527
4,982,291	1/1991	Kurahashi et al.	386/70
5,138,460	8/1992	Egawa	358/909.1
5,146,353	9/1992	Isoguchi et al.	358/909.1
5,335,072	8/1994	Tanaka et al. .	
5,404,316	4/1995	Klingler et al.	364/514
5,473,370	12/1995	Moronaga et al.	348/231
5,513,306	4/1996	Mills et al.	395/148
5,517,606	5/1996	Matheny et al.	395/156
5,553,277	9/1996	Hirano et al.	395/139
5,630,017	5/1997	Gasper et al.	395/173
5,742,504	4/1998	Meyer et al.	395/94
5,748,831	5/1998	Kubo	386/46
5,796,428	8/1998	Matsumoto et al.	348/231
5,819,103	10/1998	Endoh et al.	395/821
5,822,492	10/1998	Wakui et al.	386/107
5,845,166	12/1998	Fellegara et al.	348/64
5,861,918	1/1999	Anderson et al.	348/233
5,940,121	8/1999	Mcintyre et al.	348/207

FOREIGN PATENT DOCUMENTS

8223524	8/1996	Japan	H04N 5/225
9220186	11/1992	WIPO	H04N 5/262

Primary Examiner—Wendy Garber
Assistant Examiner—Aung S. Moe
Attorney, Agent, or Firm—Sawyer Law Group LLP

[57] **ABSTRACT**

A method and apparatus for integrating a user interface across multiple operating modes of a digital camera including a display. When the digital camera is placed into each one of the multiple operating modes, mode-specific items corresponding to that mode are displayed on the display. The digital camera includes a first button and a second button for interacting with the multiple operating modes, where the first button has a first orientation, and the second button has a second orientation. The method and apparatus includes mapping an aligned set of mode-specific items in the display to the orientation of the first button. After the mode-specific items are displayed, the user scrolls from one mode-specific item to the next in the aligned set by pressing the first button and the display indicates which of the mode-specific items is a currently active item. When a mode-specific item becomes the active item, additional information corresponding to the currently active item is displayed in the display in a location offset from the active item in a direction of orientation corresponding to that of the second button.

31 Claims, 11 Drawing Sheets

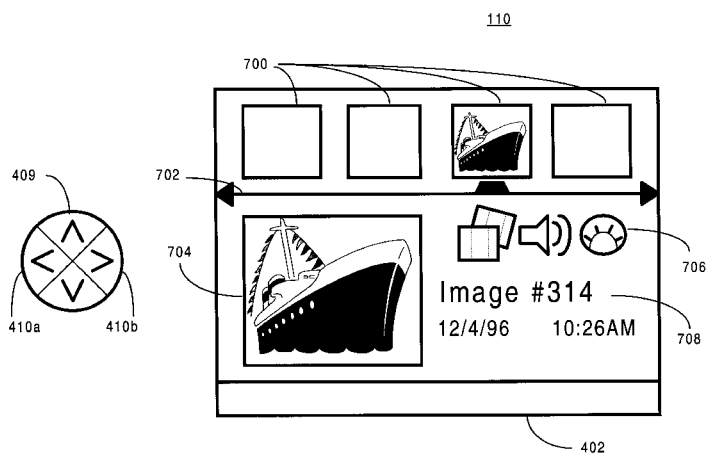

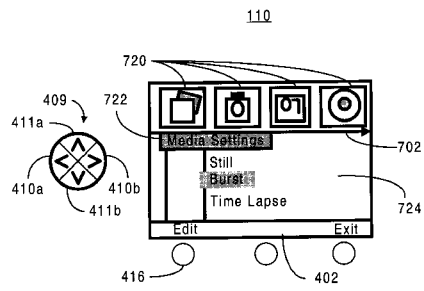

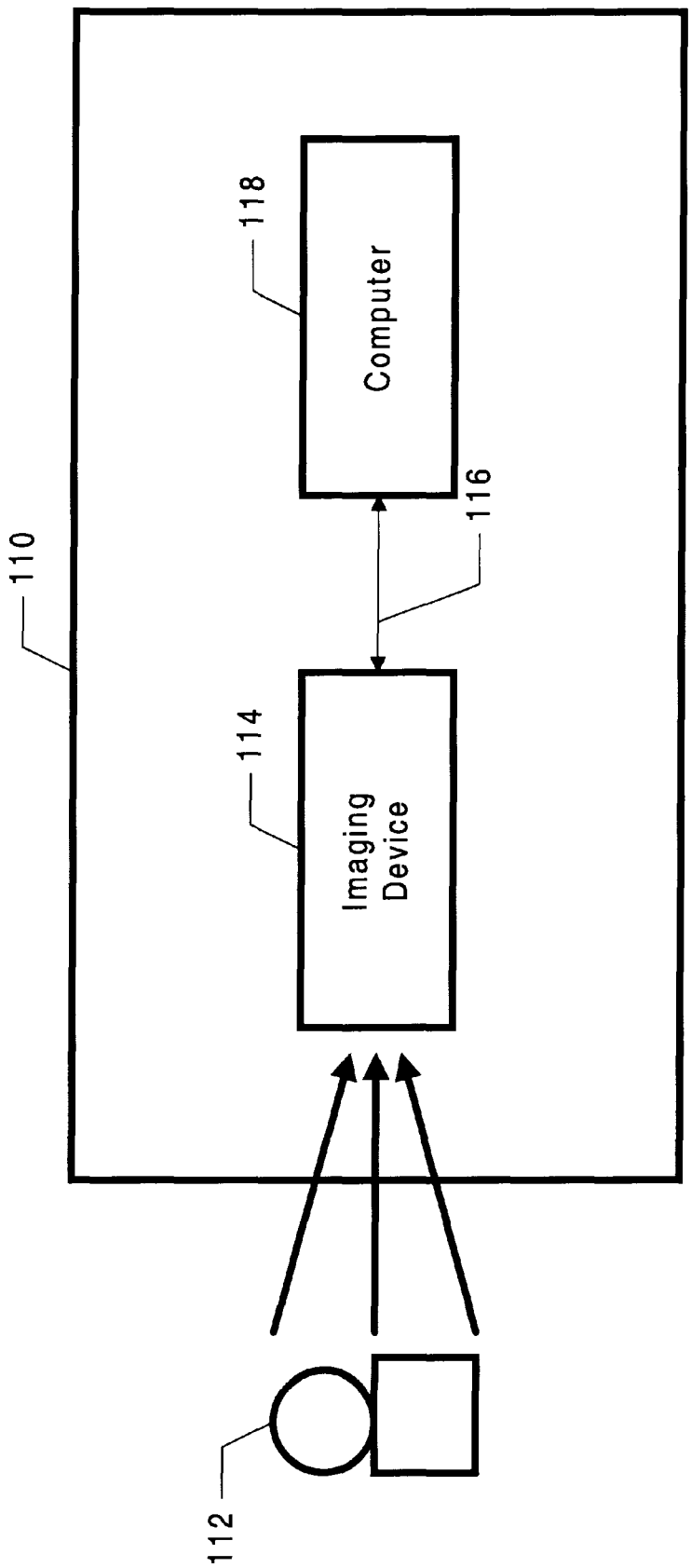

FIG. 1

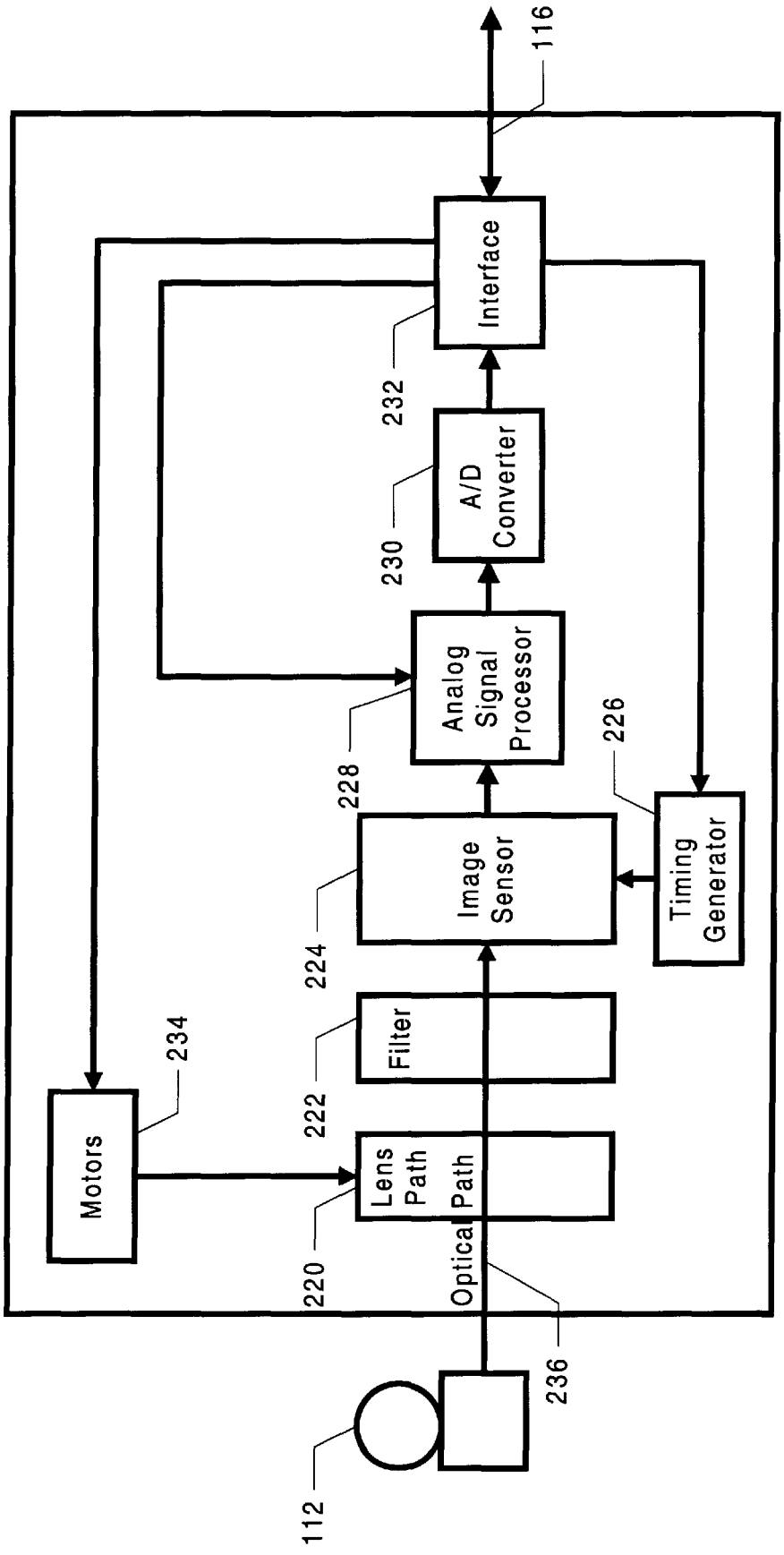
116
Interface
232
A/D Converter
230
Analog Signal Processor
228
226
Timing Generator
Image Sensor
224
Filter
222
234
Motors
Lens Path
220
Optical Path
236
112

FIG. 2

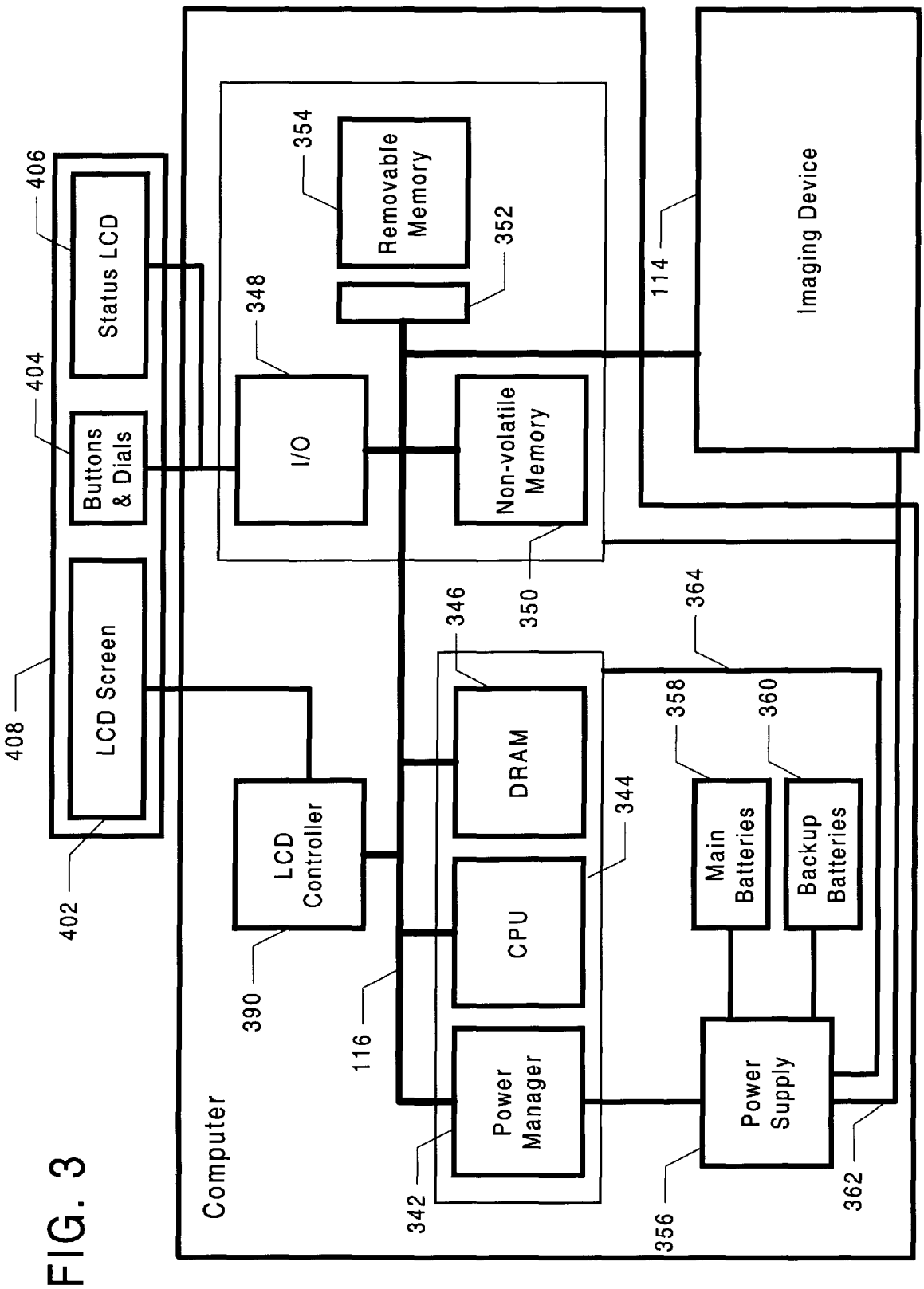
Computer
Imaging Device
114
Removable Memory
354
352
348
I/O
Non-volatile Memory
350
Status LCD
406
Buttons & Dials
404
LCD Screen
408
402
LCD Controller
390
DRAM
346
364
CPU
344
116
Power Manager
342
Main Batteries
358
Backup Batteries
360
Power Supply
356
362

FIG. 3

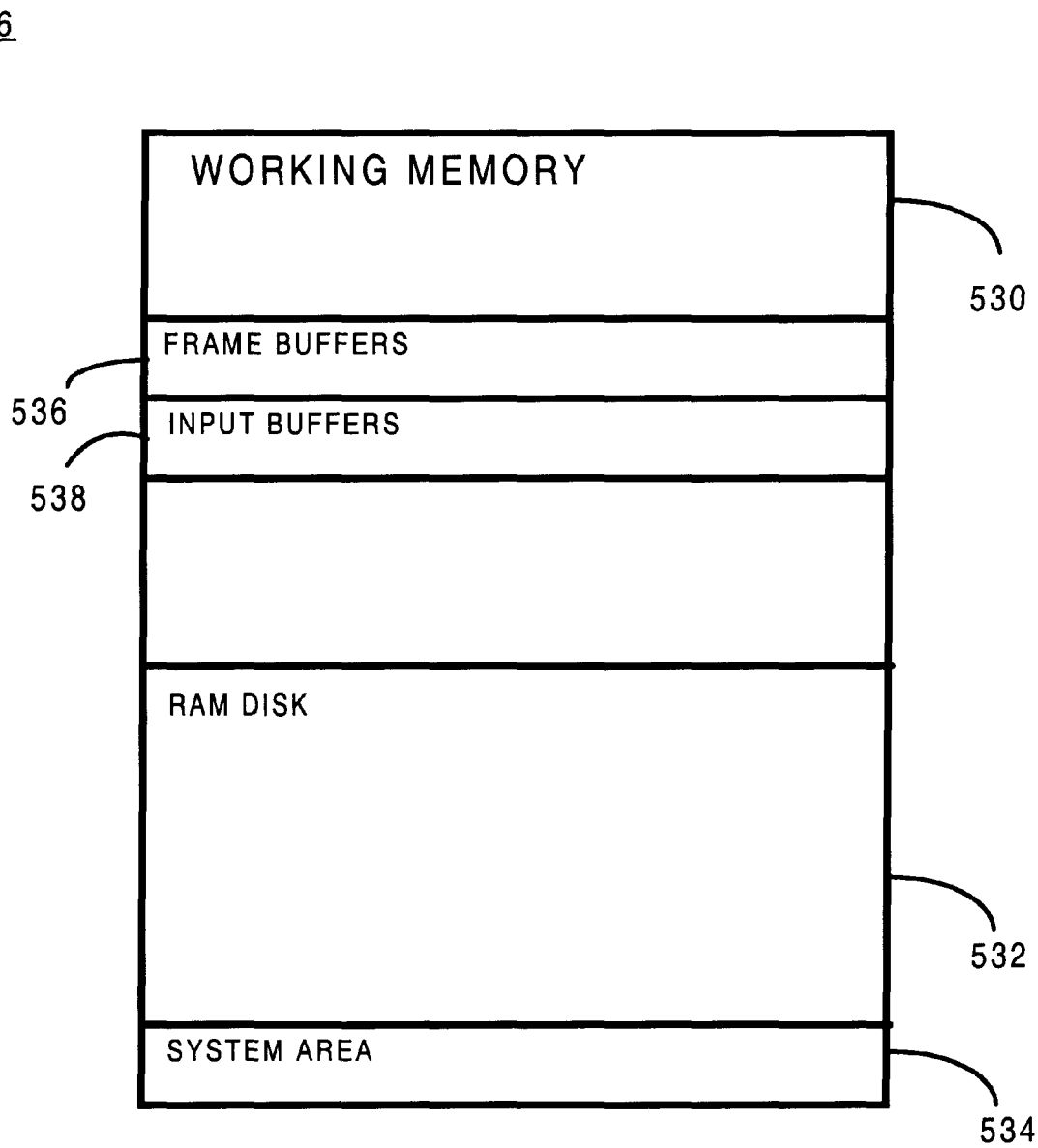
346
WORKING MEMORY
530
FRAME BUFFERS
536
INPUT BUFFERS
538
RAM DISK
532
SYSTEM AREA
534

FIG. 4A

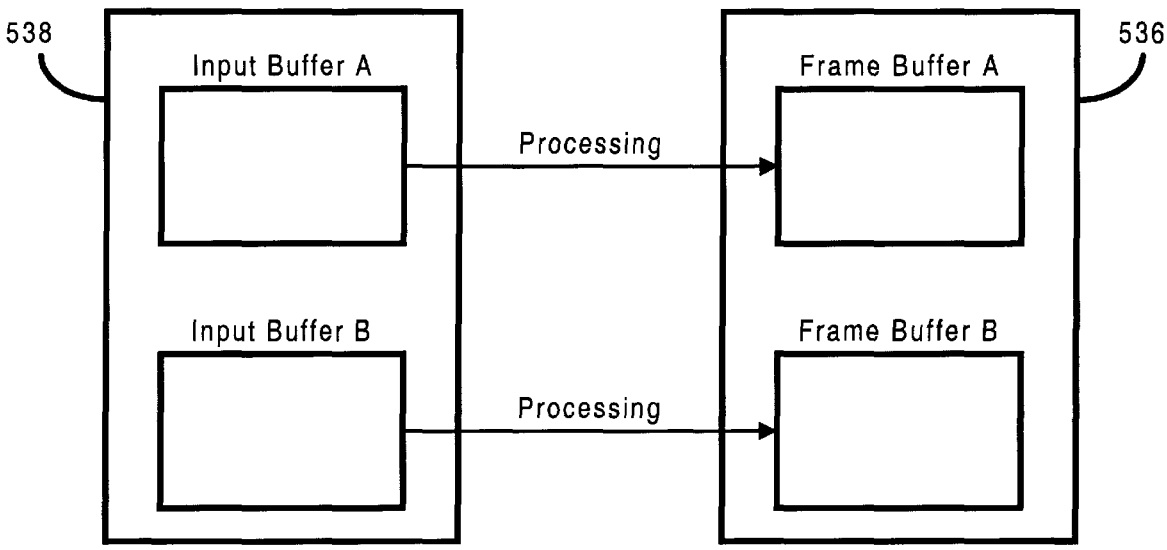
538
Input Buffer A
Input Buffer B
Processing
Processing
Frame Buffer A
Frame Buffer B
536

FIG. 4B

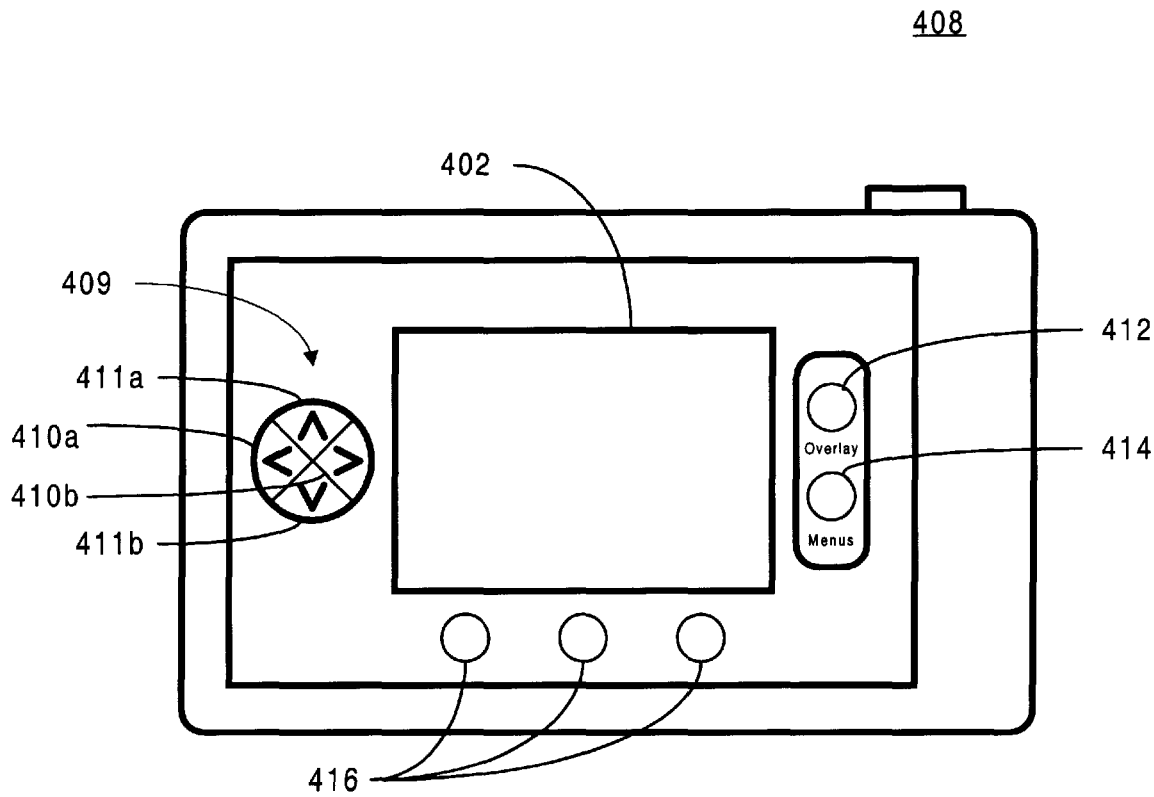
408
402
409
411a
410a
410b
411b
412
414
Overlay
Menus
416

FIG. 5A

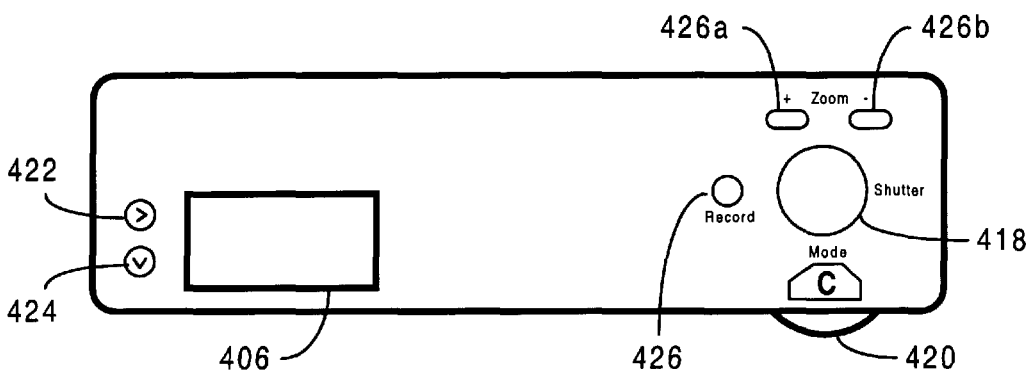
426a
426b
+ Zoom -
422
Record
Shutter
418
Mode
C
424
406
426
420

FIG. 5B

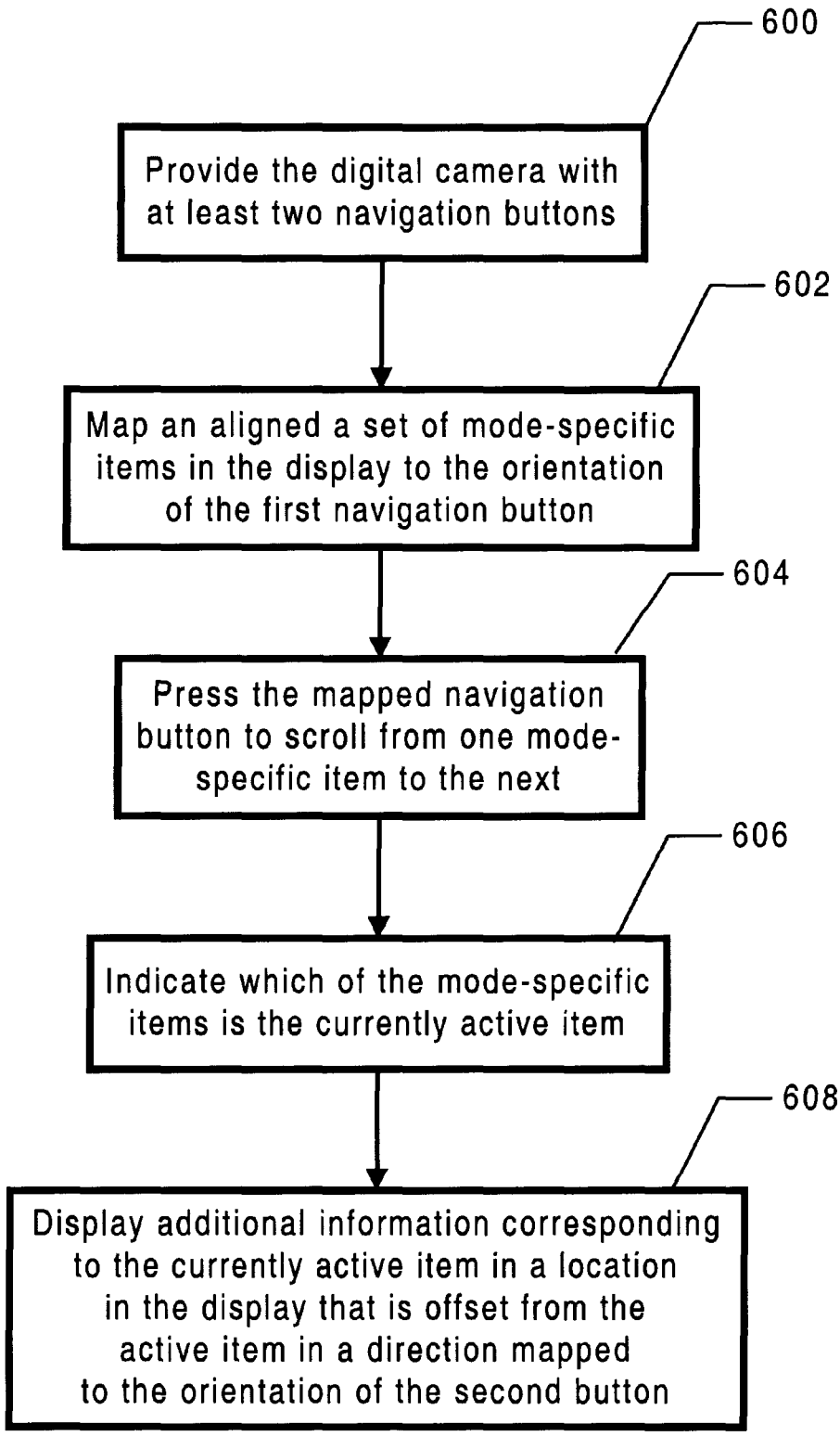
600
Provide the digital camera with at least two navigation buttons
602
Map an aligned a set of mode-specific items in the display to the orientation of the first navigation button
604
Press the mapped navigation button to scroll from one mode-specific item to the next
606
Indicate which of the mode-specific items is the currently active item
608
Display additional information corresponding to the currently active item in a location in the display that is offset from the active item in a direction mapped to the orientation of the second button

FIG. 6

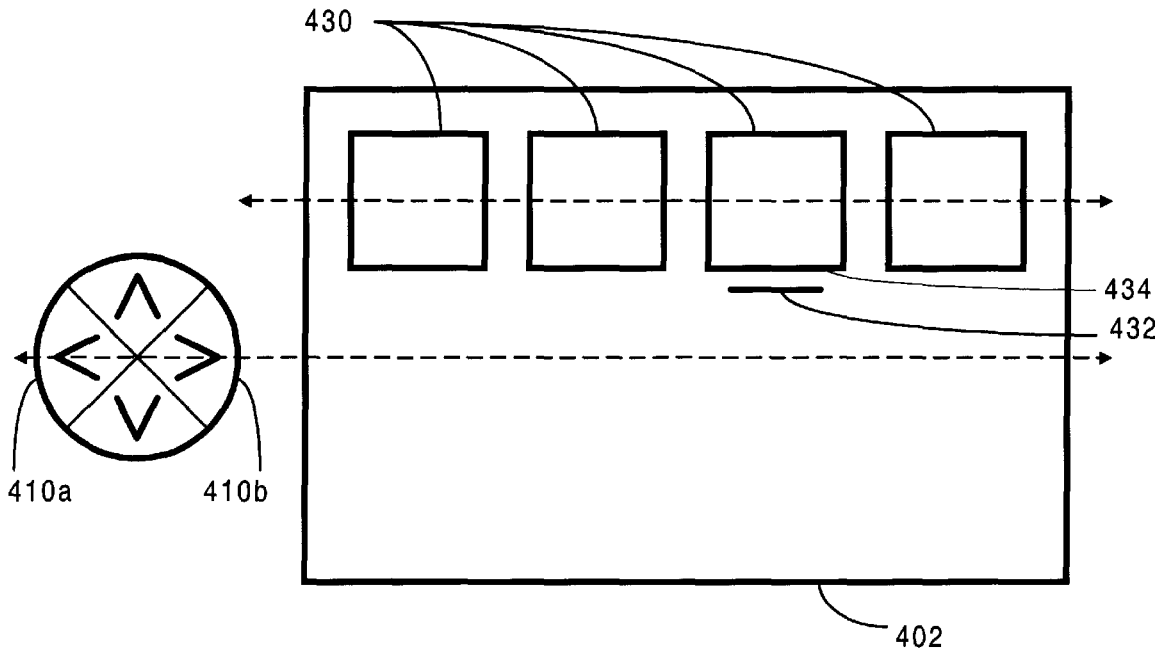

FIG. 7

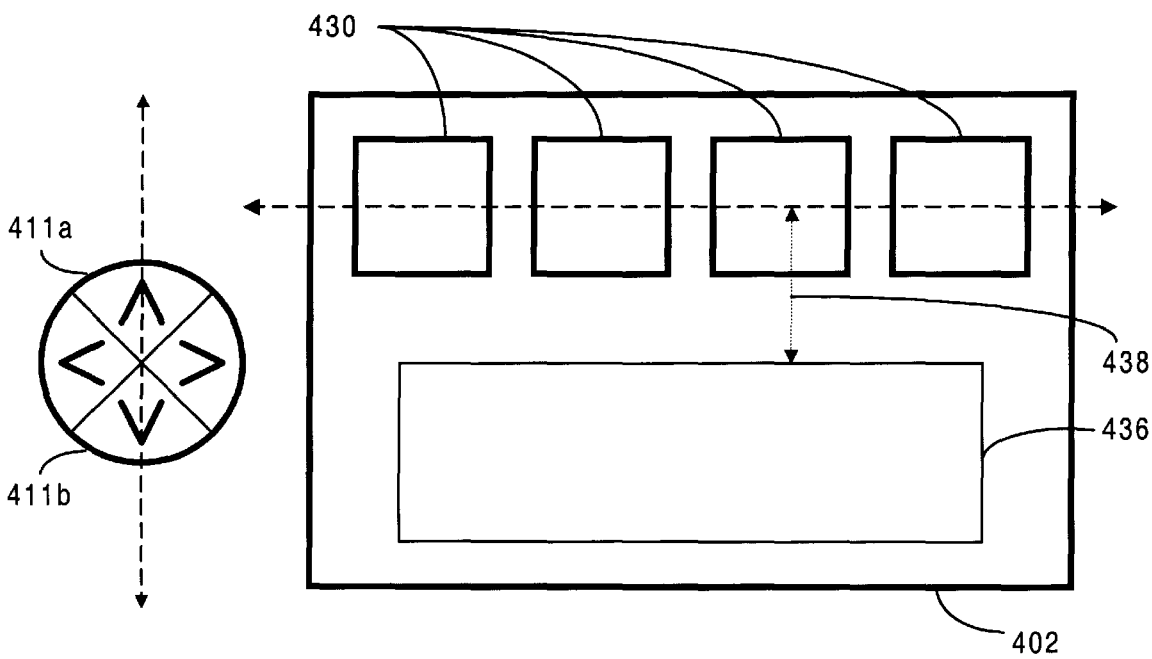

FIG. 8

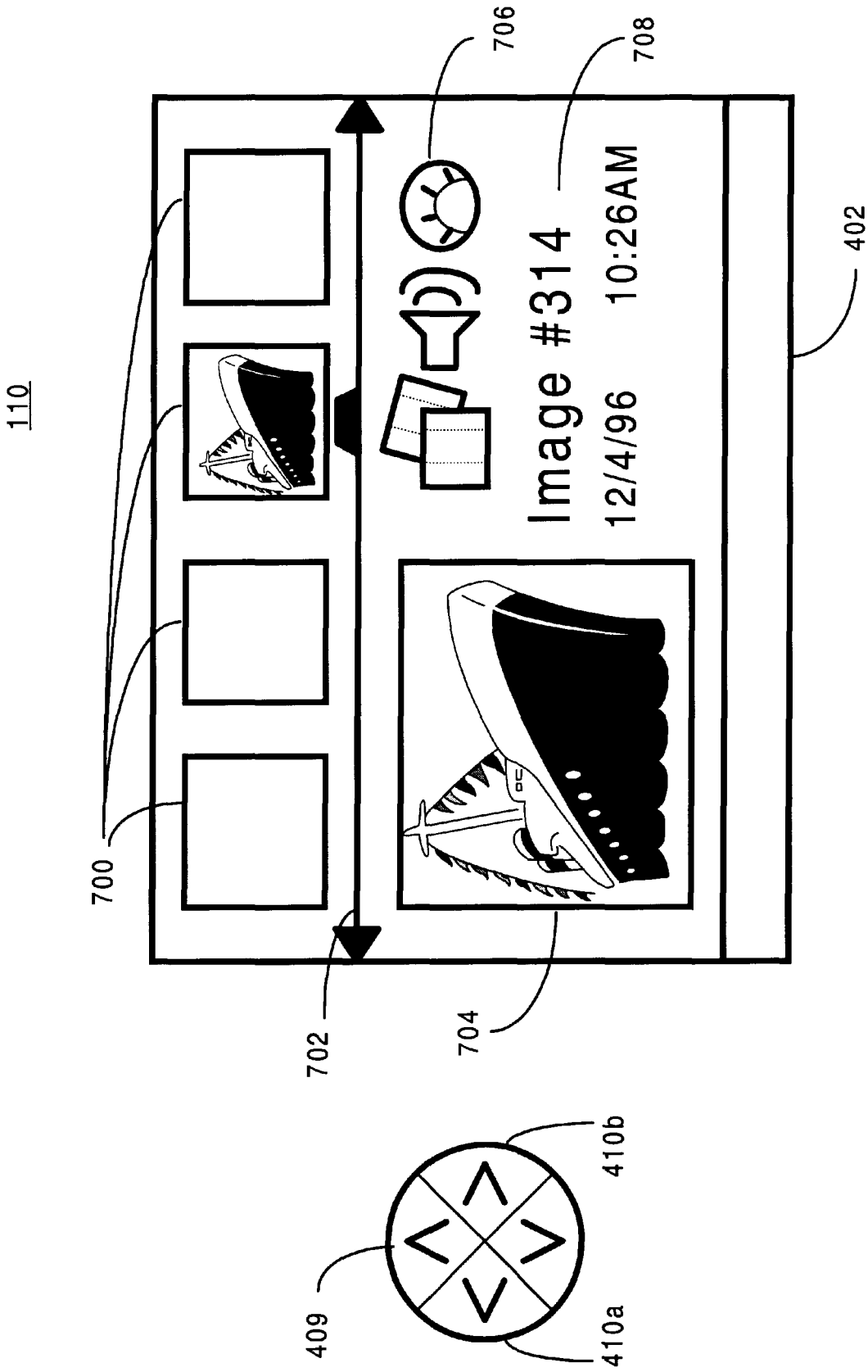
110
700
702
704
706
708
402
Image #314
12/4/96
10:26AM
409
410a
410b

FIG. 9

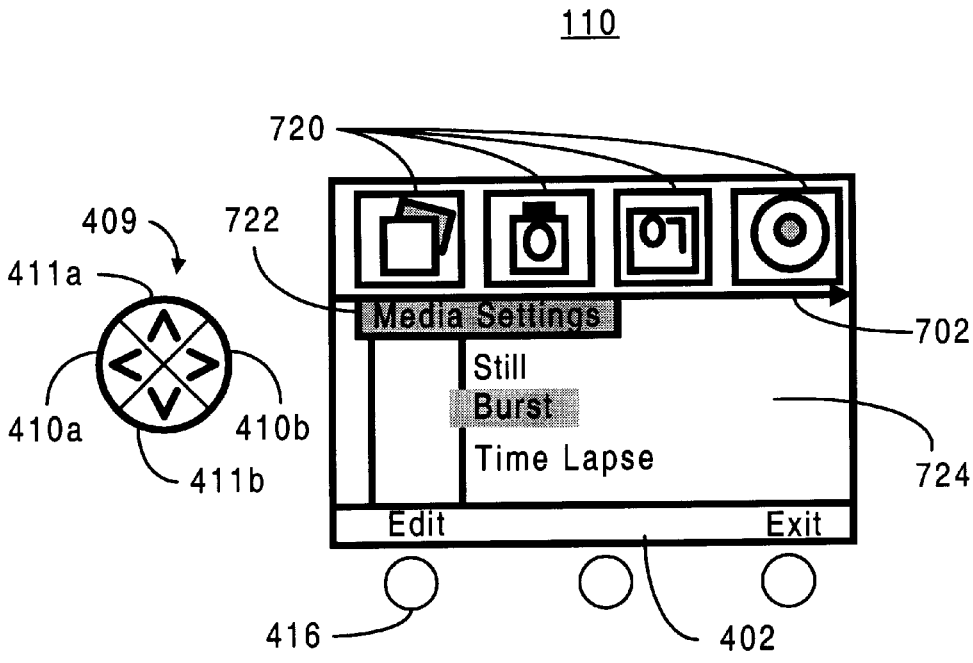

FIG. 10A

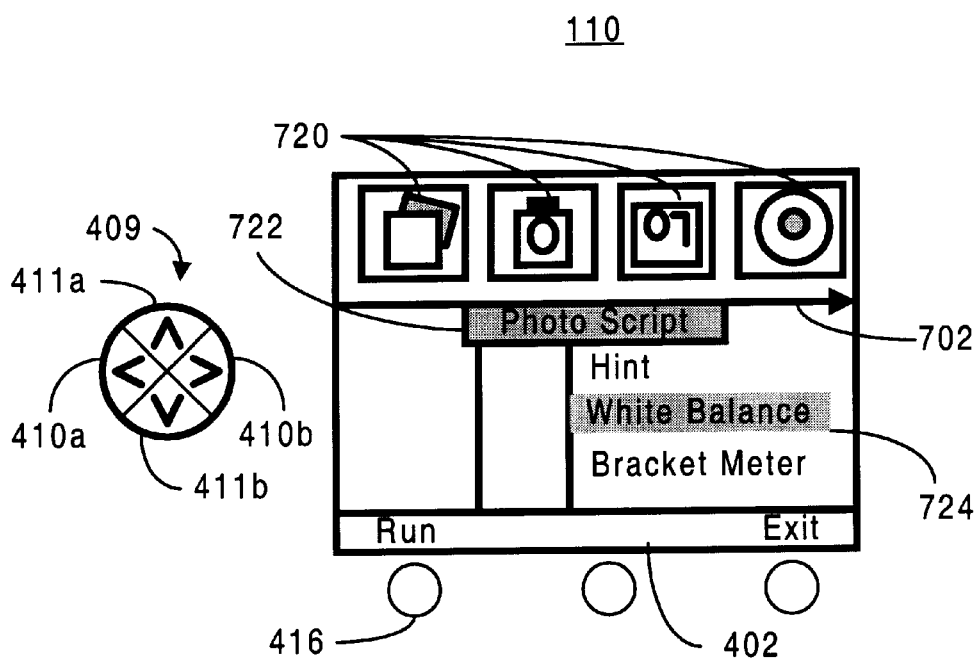

FIG. 10B

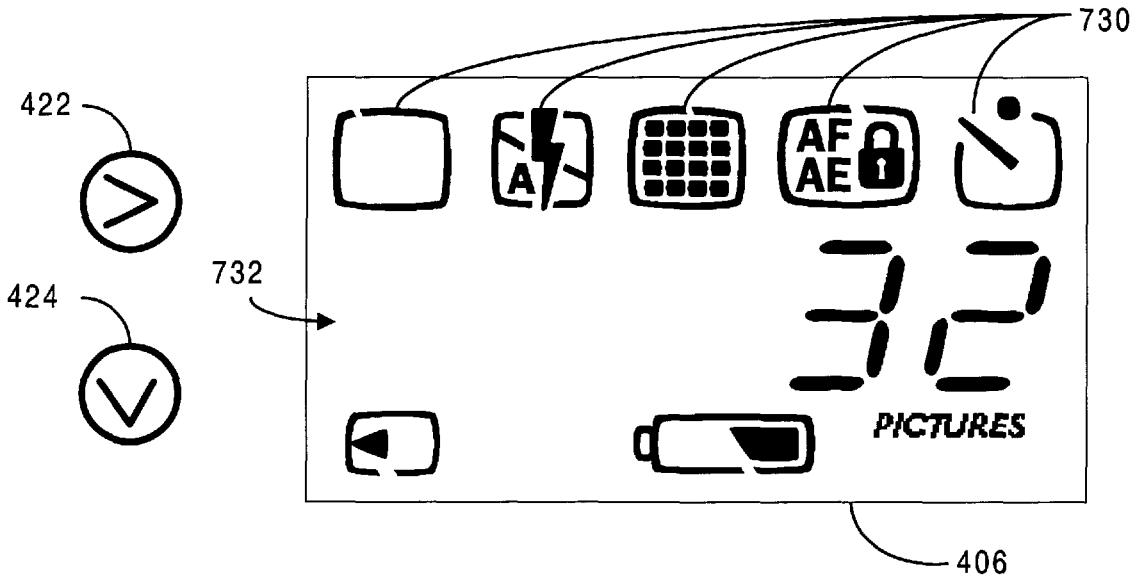

FIG. 11A

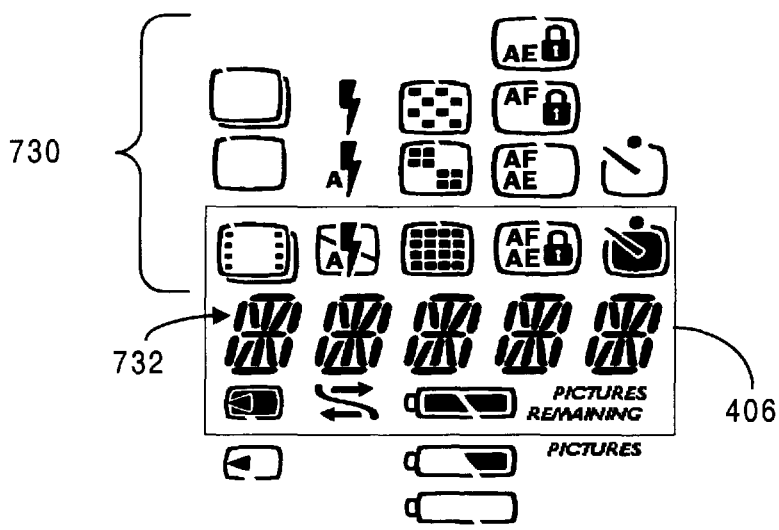

FIG. 11B

METHOD AND APPARATUS FOR INTEGRATING A DIGITAL CAMERA USER INTERFACE ACROSS MULTIPLE OPERATING MODES

FIELD OF THE INVENTION

The present invention relates generally to digital cameras, and more particularly to a method and apparatus for integrating a digital camera user interface across multiple operating modes.

BACKGROUND OF THE INVENTION

Most digital cameras today are similar in size to and behave like conventional point-and-shoot cameras. Unlike conventional cameras, however, most digital cameras store digital images in an internal flash memory or on external memory cards, and some are equipped with a liquid-crystal display (LCD) screen on the back of the camera. Through the use of the LCD, most digital cameras operate in two modes, record and play, although some only have a record mode. In record mode, the LCD is used as a viewfinder in which the user may view an object or scene before taking a picture. In play mode, the LCD is used as a playback screen for allowing the user to review previously captured images either individually or in arrays of four, nine, or sixteen images.

Digital camera user interfaces typically include a number of buttons or switches for setting the camera into one of the two modes and for navigating between images in play mode. One type of camera, for instance, includes two navigation buttons labeled "−" and "+", a mode button, a display button, a zoom button and a delete button. Play mode for this camera begins with a default screen displaying a full-sized individual image. Other images stored in the camera may then be displayed in a backward or forward sequence by pressing the "−" and "+" navigation buttons, respectively. Pressing the mode button during play mode causes four images to be displayed in a 2×2 array, and pressing the mode button again causes nine images to be displayed in a 3×3 array. The user can then "page" through screens of image arrays by pressing the navigation buttons, or the user can move from image to image in the arrays by first pressing the display button and then traversing across the images in the rows of the arrays using the navigation buttons. The user may have the full-sized image displayed of a chosen image by pressing the zoom button or can delete the image by pressing the delete button.

Although digital cameras that have both a record mode and a play mode are more versatile than digital cameras having only the record mode, two mode digital cameras suffer from several disadvantages associated with the camera's user interface. One disadvantage is that having only two modes means that either the camera only has a limited number of functions, or that several functions must be accessed in play mode since the record mode only has one function, capturing images. The disadvantages of having several functions in one mode is that the functions may have to be accessed through multiple levels of navigation screens, which complicates the operability of the camera.

Another disadvantage of conventional cameras is that the operation of user interface is non-intuitive, especially for the novice user. The user interface is non-intuitive because the operation of the user interface across different modes and/or navigation screens is inconsistent. Accessing most features in the two mode camera described above, for instance, requires that the user press the keys of the interface in a

certain sequence. Each of these key sequences may be different depending on which play-mode navigation screen is displayed, the navigation screen showing individual images or the navigation screen showing arrays of images. For example, the function of the display button changes when the navigation screens change, and in some situations where the display button has been depressed, the mode button either becomes inoperable or the functionality of mode button becomes mutually exclusive with the functionality of the zoom button. Furthermore, because each navigation screen has a different key sequence, it is not obvious to the user how to exit that screen or how to choose a particular function. Thus, this type of user interface requires that the user memorize a different key sequence for each navigation screen before being able to effectively operate the camera.

A further disadvantage of conventional digital-camera user-interfaces is that the camera is capable of displaying only the images themselves, or a combination of an image and its image number. The user interface is either incapable of delivering further information regarding displayed images and the camera features, or accessing such information requires the user to enter another non-intuitive and complicated key sequence.

Accordingly, what is needed is an improved user interface for a multi-mode digital camera. The present invention addresses such a need.

SUMMARY OF THE INVENTION

The present invention provides a method and system for integrating a user interface across multiple operating modes of a digital camera wherein mode-specific items are displayed on a display when the digital camera is placed into a particular operating mode. The digital camera includes a first and a second navigation button for interacting with the operating modes, where the first navigation button has a first orientation and the second navigation button has a second orientation. The method includes the step of mapping an aligned set of mode-specific items in the display to the orientation of the first navigation button. After the mode-specific items are displayed, the user scrolls from one mode-specific item to the next in the aligned set by pressing the first navigation button, and the display indicates which of the mode-specific items is a currently active item. After a mode-specific item becomes the active item, additional information is displayed corresponding to the currently active item in the display in a location that is offset from the active item in a direction of orientation corresponding to that of the second button. In certain modes, the additional information includes a list of information items that is displayed in an alignment corresponding to the orientation of the second button, wherein the user can scroll through the list of information items using the second navigation button.

According to the method and apparatus disclosed herein, the digital camera is provided with more than two modes wherein the user can navigate, manipulate, and view camera contents using a consistent and intuitive spatial navigation technique. Providing more than one mode in which the user can view images and camera contents reduces the complexity of the user interface, and the spatial navigation frees the user from entering long key sequences. The user interface also automatically displays context sensitive information regarding the active item, which reduces the input required from the user and thereby increases the ease of use and operation of the digital camera.

BRIEF DESCRIPTION OF THE DRAWINGS

FIG. 1 is a block diagram of a digital camera that operates in accordance with the present invention.

FIG. **2** is a block diagram of the preferred embodiment for the imaging device of FIG. **1**.

FIG. **3** is a block diagram of the preferred embodiment for the computer of FIG. **1**.

FIG. **4**A is a memory map showing the preferred embodiment of the Dynamic Random-Access-Memory (DRAM).

FIG. **4**B is a diagram illustrating the input buffers and frame buffers.

FIGS. **5**A and **5**B are diagrams depicting the back and top view, respectively, of a digital camera.

FIG. **6** is a flow chart illustrating the process of integrating a user interface across multiple operating modes of a digital camera according to the present invention.

FIG. **7** is a block diagram illustrating a preferred embodiment of the present invention in which the alignment of the mode-specific items are mapped to the orientation of the horizontal navigation buttons.

FIG. **8** is a block diagram of the user interface illustrating that when the mode-specific items are displayed horizontally, information corresponding to an active item is displayed vertically offset from the row of mode-specific items.

FIG. **9** is a diagram illustrating the operation and appearance of the integrated user interface during review mode in accordance with a preferred embodiment of the present invention.

FIGS. **10**A and **10**B are diagrams illustrating the operation and appearance of the integrated user interface during menu mode in accordance with a preferred embodiment of the present invention.

FIGS. **11**A and **11**B are diagrams illustrating the operation and appearance of the integrated user interface during capture mode in accordance with a preferred embodiment of the present invention.

DETAILED DESCRIPTION OF THE INVENTION

The present invention relates to an improvement in user interfaces of digital imaging devices, including digital cameras. The following description is presented to enable one of ordinary skill in the art to make and use the invention and is provided in the context of a patent application and its requirements. Various modifications to the preferred embodiment will be readily apparent to those skilled in the art and the generic principles herein may be applied to other embodiments. Thus, the present invention is not intended to be limited to the embodiment shown but is to be accorded the widest scope consistent with the principles and features described herein.

The present invention is a method and apparatus for integrating a digital camera user interface across multiple operating modes. According to the present invention, a method and system is provided for providing a digital camera with more than two modes and for providing a consistent and intuitive user interface across the multiple modes. The operation of the user interface across the multiple modes includes a user controlled horizontal interaction following by a reply from the camera of a vertical display of additional information in response to the user controlled horizontal interaction.

A digital camera architecture has been disclosed in co-pending U.S. patent application Ser. No. 08/666,241, entitled "A System And Method For Using A Unified Memory Architecture To Implement A Digital Camera Device," filed on Jun. 20, 1996. The Applicant hereby incorporates the co-pending application by reference, and reproduces portions of that application herein with reference to FIGS. **1–3** for convenience.

Referring now to FIG. **1**, a block diagram of a digital camera **110** is shown according to the present invention. Camera **110** preferably comprises an imaging device **114**, a system bus **116** and a computer **118**. Imaging device **114** is optically coupled to an object **112** and electrically coupled via system bus **116** to computer **118**. Once a photographer has focused imaging device **114** on object **112** and, using a capture button or some other means, instructed camera **110** to capture an image of object **112**, computer **118** commands imaging device **114** via system bus **116** to capture raw image data representing object **112**. The captured raw image data is transferred over system bus **116** to computer **118** which performs various image processing functions on the image data before storing it in its internal memory. System bus **116** also passes various status and control signals between imaging device **114** and computer **118**.

Referring now to FIG. **2**, a block diagram of the preferred embodiment of imaging device **114** is shown. Imaging device **114** preferably comprises a lens **220** having an iris, a filter **222**, an image sensor **224**, a timing generator **226**, an analog signal processor (ASP) **228**, an analog-to-digital (A/D) converter **230**, an interface **232**, and one or more motors **234**.

U.S. Pat. No. 5,496,106, entitled "A System and Method For Generating a Contrast Overlay as a Focus Assist for an Imaging Device," is incorporated herein by reference and provides a detailed discussion of the preferred elements of imaging device **114**. Briefly, imaging device **114** captures an image of object **112** via reflected light impacting image sensor **224** along optical path **236**. Image sensor **224**, which is preferably a charged coupled device (CCD), responsively generates a set of raw image data in CCD format representing the captured image **112**. The raw image data is then routed through ASP **228**, A/D converter **230** and interface **232**. Interface **232** has outputs for controlling ASP **228**, motors **234** and timing generator **226**. From interface **232**, the raw image data passes over system bus **116** to computer **118**.

Referring now to FIG. **3**, a block diagram of the preferred embodiment for computer **118** is shown. System bus **116** provides connection paths between imaging device **114**, an optional power manager **342**, central processing unit (CPU) **344**, dynamic random-access memory (DRAM) **346**, input/output interface (I/O) **348**, non-volatile memory **350**, and buffers/connector **352**. Removable memory **354** connects to system bus **116** via buffers/connector **352**. Alternately, camera **110** may be implemented without removable memory **354** or buffers/connector **352**.

Power manager **342** communicates via line **366** with power supply **356** and coordinates power management operations for camera **110**. CPU **344** typically includes a conventional processor device for controlling the operation of camera **110**. In the preferred embodiment, CPU **344** is capable of concurrently running multiple software routines to control the various processes of camera **110** within a multi-threading environment. DRAM **346** is a contiguous block of dynamic memory which may be selectively allocated to various storage functions. LCD controller **390** accesses DRAM **346** and transfers processed image data to LCD screen **402** for display.

I/O **348** is an interface device allowing communications to and from computer **118**. For example, I/O **348** permits an external host computer (not shown) to connect to and

communicate with computer **118**. I/O **348** also interfaces with a plurality of buttons and/or dials **404**, and an optional status LCD **406**, which in addition to the LCD screen **402**, are the hardware elements of the camera's user interface **408**.

Non-volatile memory **350**, which may typically comprise a conventional read-only memory or flash memory, stores a set of computer-readable program instructions to control the operation of camera **110**. Removable memory **354** serves as an additional image data storage area and is preferably a non-volatile device, readily removable and replaceable by a camera **110** user via buffers/connector **352**. Thus, a user who possesses several removable memories **354** may replace a full removable memory **354** with an empty removable memory **354** to effectively expand the picture-taking capacity of camera **110**. In the preferred embodiment of the present invention, removable memory **354** is typically implemented using a flash disk.

Power supply **356** supplies operating power to the various components of camera **110**. In the preferred embodiment, power supply **356** provides operating power to a main power bus **362** and also to a secondary power bus **364**. The main power bus **362** provides power to imaging device **114**, I/O **348**, non-volatile memory **350** and removable memory **354**. The secondary power bus **364** provides power to power manager **342**, CPU **344** and DRAM **346**.

Power supply **356** is connected to main batteries **358** and also to backup batteries **360**. In the preferred embodiment, a camera **110** user may also connect power supply **356** to an external power source. During normal operation of power supply **356**, the main batteries **358** provide operating power to power supply **356** which then provides the operating power to camera **110** via both main power bus **362** and secondary power bus **364**. During a power failure mode in which the main batteries **358** have failed (when their output voltage has fallen below a minimum operational voltage level) the backup batteries **360** provide operating power to power supply **356** which then provides the operating power only to the secondary power bus **364** of camera **110**.

Referring now to FIG. **4**A, a memory map showing the preferred embodiment of dynamic random-access-memory (DRAM) **346** is shown. In the preferred embodiment, DRAM **346** includes RAM disk **532**, a system area **534**, and working memory **530**.

RAM disk **532** is a memory area used for storing raw and compressed image data and typically is organized in a "sectored" format similar to that of conventional hard disk drives. In the preferred embodiment, RAM disk **532** uses a well-known and standardized file system to permit external host computer systems, via I/O **348**, to readily recognize and access the data stored on RAM disk **532**. System area **534** typically stores data regarding system errors (for example, why a system shutdown occurred) for use by CPU **344** upon a restart of computer **118**.

Working memory **530** includes various stacks, data structures and variables used by CPU **344** while executing the software routines used within computer **118**. Working memory **530** also includes input buffers **538** for initially storing sets of raw image data received from imaging device **114** for image conversion, and frame buffers **536** for storing data for display on the LCD screen **402**.

In a preferred embodiment, the conversion process is performed by a live view generation program, which is stored in non-volatile memory **350** and executed on CPU **344**. However, the conversion process can also be implemented using hardware. Referring again to FIG. **3**, during the execution of the live view generation program (not shown), the CPU **344** takes the raw image data from the input buffers **538** in CCD format and performs color space conversion on the data. The conversions process performs gamma correction and converts the raw CCD data into either a RGB or YCC color format which is compatible with the LCD screen **402**. After the conversion, CPU **344** stores the image data in the frame buffers **536**. The LCD controller **390** then transfers the processed image data from the frame buffers to the LCD screen **402** (via an optional analog converter) for display.

Referring now to FIG. **4**B, the contents of input buffers **538** and the frame buffers **536** are shown. In a preferred embodiment, both the input buffers **538** and the frame buffers **536** utilize two separate buffers, called ping-pong buffers, to improve the display speed of the digital camera and to prevent the tearing of the image in the display **402**. As shown, input buffers **538** include an input buffer A and an input buffer B, and frame buffers **536** include a frame buffer A and a frame buffer B.

The input buffers A and B alternate between an input cycle and a processing cycle. During the input cycle, the input buffers **538** are filled with raw image data from the image device **114**, and during the processing cycle, CPU **344** processes the raw data and transmits the processed data to the frame buffers **536**. More specifically, while input buffer A is filling with image data, the data from input buffer B is processed and transmitted to frame buffer B. At the same time, previously processed data in frame buffer A is output to the LCD screen **402** for display. While input buffer B is filling with image data, the data from input buffer A is processed and transmitted to frame buffer A. At the same time, previously processed data in frame buffer B is output to the LCD screen **402** for display.

According to the present invention, the flexible architecture of the digital camera is used to provide and integrated camera user interface. More specifically, the present invention provides a method and system for integrating a digital-camera user-interface across multiple operating modes of the digital camera.

FIGS. **5**A and **5**B are diagrams depicting the hardware components of the camera's **110** user interface **408**. FIG. **5**A is back view of the camera **110** showing the LCD screen **402**, a four-way navigation control button **409**, an overlay button **412**, a menu button **414**, and a set of programmable soft keys **416**. FIG. **5**B is a top view of the camera **110** showing a shutter button **418**, and a mode dial **420**. The camera may optionally include status LCD **406**, status LCD scroll and select buttons **422** and **424**, a sound record button **426**, and zoom-in, zoom-out buttons **426***a* and **426***b*.

In one aspect of the present invention, the user interface **408** includes several different operating modes for supporting various camera functions. However, the modes relevant to this description are review mode, menu mode, and capture (record) mode. In review mode, the camera **100** supports the actions of reviewing camera contents, editing and sorting images, and printing and transferring images. In menu mode, the camera **100** allows the user to manipulate camera settings and to edit and organize captured images. In capture mode, the camera **100** supports the actions of preparing to capture an image, and capturing an image through the use of either the LCD screen **402** or the status LCD **406**.

The user switches between the review, menu, and capture modes, using the mode dial **420**. When the camera is placed into a particular mode, that mode's default screen appears in the LCD screen **402** in which a set of mode-specific items,

such as images, icons, and text, are displayed. According to the present invention, the user may navigate through and access the contents and features of multiple camera modes using a consistent and intuitive user interface. Throughout various operating modes, the user interface includes a user controlled horizontal interaction following by a reply from the camera of a vertical display of information. Because the user interacts with the camera in each of various camera modes using the hardware buttons in a similar manner, as described herein, the learnability and usability of the camera are enhanced.

Referring now to FIG. **6**, a flow chart is shown illustrating the process of integrating a user interface across multiple operating modes of a digital camera in accordance with the present invention. Referring to both FIGS. **5**A, and **6**, the process begins by providing the user interface with at least two sets of navigation buttons in step **600**. As shown in FIG. **5**A, in a preferred embodiment of the present invention, the four-way navigation control button **409** provides the user interface with four buttons; left/right buttons **410***a* and **410***b*, which have a horizontal orientation, and up/down buttons **411***a* and **411***b*, which have a vertical orientation. In accordance with the present invention, the user uses the four way controller **409** in each of the various camera modes as a global navigational device in a way that provides the user with intuitive spatial orientation when navigating through the modes, as explained further below.

Referring again to FIG. **6**, after the camera is placed into a particular mode, a set of mode-specific items are aligned in the LCD screen **402** so that the alignment of the mode-specific items maps to the natural spatial orientations of one set of navigation buttons on the four way controller in step **602**.

FIG. **7** is a block diagram illustrating a preferred embodiment of the present invention in which the alignment of the mode-specific items **430** are mapped to the orientation of the horizontal navigation buttons **410***a* and **410***b*. As shown, mapping the alignment of the mode-specific items **430** to the orientation of the horizontal navigation buttons **410***a* and **410***b* causes the mode-specific items **430** to be displayed in a row(s) across the LCD screen **402**. Rather than mapping the alignment of the mode-specific items **430** to the orientation of the horizontal navigation buttons **410**, the mode-specific items **430** may also be mapped to the orientation of the vertical navigation buttons **411***a* and **411***b*. This would cause the mode-specific items to be displayed in a column in the LCD screen **402**. Additionally, the alignment of the mode-specific items **430** may be mapped to other navigation button orientations (e.g. a diagonal orientation) if so desired.

Referring again to FIG. **6**, after the mode-specific items **430** are displayed, the user can scroll or navigate from one mode-specific item **430** to the next by pressing the mapped navigation buttons in step **604**. In FIG. **7** for example, pressing navigation button **410***b* causes a right scrolling action, and pressing navigation button **410**A causes a left scrolling action. As the user scrolls through the mode-specific items **430**, the camera displays an indication **432** of which one of the mode-specific items **430** is a currently active item **434** in step **606**. This indication **432** may take the form of a highlight, a stationary or moving pointer, the active item **432** itself may blink, or a different type of mode-specific item may be shown to indicate an active/inactive status.

After a particular mode-specific item **430** has become the active item **434**, additional information **436** corresponding to the active item is displayed in the LCD screen **402** in a location offset from the active item **434** in a direction mapped to the orientation of the second set of navigation buttons in step **608**.

FIG. **8** is a block diagram of the user interface illustrating that when the mode-specific items **430** are displayed horizontally, the information **436** corresponding to the active item **434** is displayed in an area of the LCD screen **402** that is vertically offset **438** from the horizontal row of mode-specific items, and that the direction of offset **438** is parallel to the orientation of the vertical navigation buttons **411***a* and **411***b*.

According to the present invention, throughout the various operating modes of the camera, the integrated user interface maintains an interaction model in which the user scrolls horizontally to select an active mode-specific item, followed by a vertical display of additional information in the LCD screen **402** relating to the active item. And in certain modes, the additional information includes a list of information items that is displayed in an alignment corresponding to the orientation of the vertical navigation buttons **411***a* and **411***b*, wherein the user can scroll through the list of information items using those buttons.

By mapping both the modes of navigation and the display of mode information to the orientation of the navigation buttons **410** and **411** of the four way controller, the user essentially only has to learn one major mechanism for interacting with the multiple modes of the digital camera. That is, since the user interface interacts with each of the camera modes using only the four-way controller **409**, the integrated user interface of the present invention significantly reduces the amount of key sequences the user must memorize in order to operate the camera. The preferred implementations of the review mode, the menu mode, and the capture mode are described below to further explain the integrated user interface of the present invention.

Referring now to FIG. **9**, a diagram illustrating the operation and appearance of the integrated user interface during review mode is shown in accordance with a preferred embodiment of the present invention. Moving the mode dial **420** (FIG. **5**B) to access the review mode enables the user to view all the images in the camera along with specific attributes associated with each of the images.

The mode-specific items displayed across the LCD screen **402** in review mode are thumbnail images **700** that represent small-sized versions of the captured images. The thumbnails **700** are intended to serve as navigational aides rather than accurate representations of their images. As a result, the thumbnails **700** are cropped to a square size (50×50 pixels). A stationary selection arrow line **702** is used as both a navigational aid and to indicate which thumbnail is the currently active image.

In a preferred embodiment, the review screen layout displays four thumbnails **700** at a time and is based on a filmstrip metaphor which allows users to quickly move forward and backward among pictures chronologically. The user may navigate through the series of displayed thumbnails **700** in the LCD screen **402** using the four-way navigation control button **409**. When the user holds down the left/right buttons **410**, the thumbnails **700** are scrolled-off the LCD screen **402** and replaced by new thumbnails **700** representing other captured images to provide for fast browsing of the camera contents. When there are more than four images in the camera, the selection arrow line **702** displays arrow heads to indicate movement in that direction is possible with the left/right navigation buttons **410**. As the user presses the navigation buttons **410** and the thumbnails

700 scroll across the LCD screen 402, the thumbnail 700 that is positioned over a notch in the selection arrow line 702 is considered the active image.

When a thumbnail 700 becomes the active image, additional information corresponding to that image is automatically displayed vertically offset from the row of thumbnails 700 in the LCD screen 402. In a preferred embodiment, the additional information includes a large thumbnail 704 showing a larger view of the active thumbnail, and image information comprising an icon bar 706 and text 708. The icon bar may display several icons indicating the media types associated with the active image, such as whether the image is a still, a time lapse, or a burst image, whether sound is attached to the image, and a category for the image. The displayed text 708 may include a specification of the name or number of the image, and the date and time the image was captured.

Referring now to FIGS. 10A and 10B, diagrams illustrating the operation and appearance of the integrated user interface during menu mode are shown in accordance with a preferred embodiment of the present invention. Menu mode may be accessed during other camera modes by pressing the menu button 414 or the soft keys 416 (see FIG. 5B) on the camera interface; and pressing the menu button 414 again exits the mode. Similar to the review mode, the menu mode is divided into horizontal and vertical elements, and is also capable of supporting various levels of sub menus.

The menu-mode is capable of displaying multiple levels of navigation in the menu structure. In the first level of menus, the mode-specific items displayed in a row across the LCD screen 402 are graphical icons 720 representing menu categories for camera and image settings. In accordance with the integrated user interface of the present invention, the user may first select a menu category by navigating horizontally across the LCD screen 402 using the horizontal navigation control button 410, and then select a menu item by navigating vertically in the display using the vertical navigation control buttons 411.

When navigating horizontally from icon to icon 720 in the LCD screen 402, arrows on selection arrow line 702 indicate to the user which direction they can navigate. In the example shown in FIGS. 10A and 10B, the right arrow underneath the icon row indicates that the user can only scroll right and that more icons 720 are available past the fourth icon 720 in the row. In a preferred embodiment, the icons are stationary in the LCD screen 402, and as the user presses the left/right buttons 410, each icon 720 in turn becomes the active icon. If the fourth icon 720 is active and the user presses the right navigation button 410*b*, then the display would "page" to reveal the next set of icons 720. In an alternative embodiment, the icons 720 scroll on and off the LCD screen 402 as the user presses the left/right buttons 410.

When an icon becomes active, the icon 720 is highlighted, a text label 722 for the icon is displayed under the icon 720, and a list of menu items corresponding to camera features is displayed below the text label 722 in an alignment mapped to the orientation of the up/down buttons 411. FIG. 10A shows an example menu displayed below the text menu corresponding the first icon in the row. After a menu is displayed, the user can then vertically scroll through the list of menu items by pressing the up/down buttons 411, causing a highlight to move up and down the feature list. FIG. 10B illustrates the result of the user scrolling to the second icon in the row, which causes the menu for that icon to be displayed.

In a preferred embodiment, sub-levels of menus may be displayed if necessary by pressing other buttons on the camera, such as a soft key 416. When a secondary level of menus is available, text such as "edit", "next", or "more" may appear above a soft key 416, as shown. By pressing the soft key 416 under this text, a secondary menu will be displayed in the same fashion as the first level. Pressing the "edit" soft key again in the second level menu, brings up another level, and so on.

Referring now to FIGS. 11A and 11B, diagrams illustrating the operation and appearance of the integrated user interface during capture mode are shown in accordance with a preferred embodiment of the present invention. Because most of color LCD technology in use today may have disadvantages in terms of power consumption and viewability, the present invention includes the status LCD 406 in the user interface 110 to act as a supplementary capture interface to compensate for the restrictions of the LCD screen 402. The optional status LCD 406 provides image capture and feature setting capability without using the color LCD screen 402.

Similar to the modes described above, the status LCD 406 in capture mode is divided into horizontal and vertical elements. Referring to FIG. 11A, the horizontal mode-specific items displayed across the status LCD 406 are icons 730 that enable the user to set the following preferred set of features; image capture type, flash, image compression level, exposure/focus lock, and self timer. In accordance with the integrated user interface, the user navigates through the status LCD 406 using a horizontal scroll button 422 and a vertical select button 424, although the four-way controller 409 may optionally be used in an alternate embodiment.

To navigate the status LCD 406, the user presses horizontal scroll button 422 to activate individual icons across the top row with each press. Active icons are preferably identified by blinking on and off. To modify the current setting associated with an active icon 730 the user presses the vertical select button 424 to toggle the setting to the desired state. To reinforce the meaning of the active icon state, an alphanumeric display 732 is used to spell out the current setting of the active icon. Each time the user presses the vertical select button 424, the state of the active icon state changes, and the alphanumeric display 732 displays text corresponding to that state.

FIG. 11B is diagram illustrating the possible icon 730 states for the status LCD 406 in a preferred embodiment of the present invention. The first icon 730 in the icon row represents the image capture type settings, and the possible states shown from top to bottom correspond to burst, still, or time-lapse image capture type. The second icon 730 represents the flash setting, and the possible states shown are on, auto, and off. The third icon 730 represents the image compression level, and the possible states shown are good, better, and best. The fourth icon 730 represents the exposure/focus lock setting, and the possible states shown are auto exposure (AE) lock, auto focus (AF) lock, AF/AE active, and AF/AE lock. And the last icon 730 in the icon row represents the setting for the self timer, and the possible states shown are off and on.

A method and system for integrating a digital camera user interface across multiple operating modes has been disclosed. Throughout the various operating modes of the camera, the integrated user interface maintains an interaction model in which the user scrolls horizontally to select a mode-specific item, followed by a vertical display of additional information in the LCD screen relating to that selected

item. Using the integrated user interface of the present invention, the user can navigate, manipulate, and view camera contents using a consistent and intuitive spatial navigation technique that frees the user from entering long key sequences, and thereby increases the ease of use and operation of the digital camera.

Although the present invention has been described in accordance with the embodiments shown, one of ordinary skill in the art will readily recognize that there could be variations to the embodiments and those variations would be within the spirit and scope of the present invention. For example, the integrated user interface also applies to cameras having only two modes, but that have multiple navigation screens within the "play mode" Accordingly, many modifications may be made by one of ordinary skill in the art without departing from the spirit and scope of the appended claims.

What is claimed is:

1. A method for integrating a user interface across multiple operating modes of a digital camera having a display and a first button and a second button, the first button having a first orientation and the second button having a second orientation, the method comprising the steps of:

a) placing the digital camera into a first operating mode;

b) displaying mode-specific items in the display such that all the mode-specific items are displayed in an alignment that is mapped to the orientation of the first button to create a mapped navigation button;

c) scrolling the mode-specific items by pressing the mapped navigation button wherein the display indicates which of the mode-specific items is a currently active item, and wherein the mode-specific items are scrolled-off the display and replaced by new mode-specific items;

d) displaying additional information corresponding to the currently active item in the display in a location that is offset from the active item in a direction of orientation corresponding to that of the second button; and

e) placing the digital imaging device into a second operating mode and repeating steps b) through d) such that the user navigates both the first and second operating modes in substantially the same manner, thereby improving ease of use of the digital imaging device.

2. The method as in claim **1** wherein when the camera is placed into first mode, the additional information includes a list of information items, the method further including the steps of:

d1) displaying the list of information items in an alignment corresponding to the orientation of the second button; and

d2) scrolling through the list of information items by pressing the second button.

3. The method as in claim **2** wherein step c) further includes the step of:

c1) providing the first button with left and a right navigation buttons having a horizontal orientation.

4. The method as in claim **3** wherein step d) further includes the step of:

providing the second button with up and down navigation buttons having a vertical orientation.

5. The method as in claim **4** further including the step of displaying a set of menu icons as the mode-specific items while in the first operating mode.

6. The method as in claim **5** further including the step of pressing the down navigation button to scroll through the list of information items corresponding to the currently active item.

7. The method as in claim **4** further including the step of displaying a set of thumbnail images corresponding to captured images as the mode-specific items when the digital camera is placed into the second operating mode.

8. The method as in claim **7** further including the step of displaying a large thumbnail as part of the additional information.

9. The method as in claim **8** further including the step of including as part of the additional information, one or more media types, a name, and a capture date and time for the active image, wherein the media types include a still image, a time lapse image, a burst image, and sound.

10. The method as in claim **4** further including the step of providing a third operating mode wherein when the digital camera is placed into the third operating mode, a set of icons representing camera features are displayed as the mode-specific items.

11. The method as in claim **10** further including the step of changing a particular one of the camera features by pressing one of the up and down navigation buttons to change a state of the corresponding icon.

12. A digital camera having an integrated user interface; comprising:

an image device for capturing image data;

a memory coupled to the imaging device for storing the image data as captured images;

a display;

a first set of navigation buttons having a first orientation;

a second set of navigation buttons having a second orientation;

multiple operating modes for supporting a plurality of digital camera functions; and

a processor coupled to the image device, the memory, the display and to the first and second set of navigation buttons for controlling operation of the digital camera and the multiple operating modes, such that at least two of the operating modes are navigated in substantially the same manner, wherein the processor includes,

means responsive to the digital camera being placed into the at least two operating modes for displaying mode-specific items in the display such that all the mode-specific items are displayed in an alignment that is mapped to the orientation of the first set of navigation buttons,

means for scrolling the mode-specific items in response to a user pressing the first set of navigation buttons, wherein an indication in the display indicates which of the mode-specific items is a currently active item, and wherein the mode-specific items are scrolled-off the display and replaced by new mode-specific items, and

means for displaying additional information corresponding to the currently active item in the display in a location that is offset from the active item in a direction of orientation corresponding to that of the second set of navigation buttons.

13. The digital camera of claim **12** wherein when the digital camera is placed into a first operating mode, the additional information includes a list of information items, wherein the processor further includes,

means for displaying the list of information items in an alignment corresponding to the orientation of the second set of navigation buttons; and

means for scrolling through the list of information items in response to the user pressing the second navigation button.

14. The digital camera as in claim **13** wherein the first set of navigation buttons have a horizontal orientation and the second set of navigation buttons have a vertical orientation.

15. The digital camera as in claim **14** wherein in the first operating mode the mode-specific items comprise icons representing menu categories.

16. The digital camera as in claim **15** wherein as the user presses the first set of navigation buttons to scroll through the set of icons, each of the icons is highlighted, and becomes an active icon in response to the user pressing one of the second set of navigation buttons.

17. The digital camera as in claim **16** wherein when the digital camera is placed into a second operating mode the mode-specific items comprise thumbnails representing captures images.

18. The digital camera as in claim **17** wherein when the digital camera is placed into the second operating mode the additional information includes a large thumbnail representing of the currently active item.

19. The digital camera as in claim **18** wherein when the digital camera is placed into a third operating mode the mode-specific items comprise icons representing camera feature settings.

20. The digital camera as in claim **19** wherein when the digital camera is placed into the third operating mode the additional information includes text representing the feature setting of the currently active item.

21. The digital camera as in claim **20** wherein the digital camera further includes a status display wherein when the digital camera is placed into the third operating mode the mode-specific items and the additional information are displayed in the status display.

22. A method for integrating a user interface across multiple operating modes of a digital imaging device, the digital imaging device including a display, and a navigational device including first and second control buttons for controlling the display, the method comprising the steps of:

a) placing the digital imaging device into a first operating mode;

b) displaying a plurality mode-specific items, such that all the mode-specific items are displayed in a horizontal row across the display;

c) providing a user controlled horizontal interaction whereby the user presses the first control button to horizontally scroll the plurality of mode-specific items in the row, which activates individual mode-specific items with each press, wherein the mode-specific items are scrolled-off the display and replaced by new mode-specific items; and

d) providing a vertical response from the digital imaging device wherein in a position on the display vertically offset from the plurality mode-specific items, the digital imaging device displays an optional combination of graphics and text corresponding to the activated mode-specific item; and

e) placing the digital imaging device into a second operating mode and repeating steps b) through d) such that the user navigates both the first and second operating modes in substantially the same manner, thereby improving ease of use of the digital imaging device.

23. A method as in claim **22** wherein step b) further includes the step of:

b1) displaying a plurality of thumbnail images as the mode-specific items.

24. A method as in claim **23** wherein step d) further includes the step of:

d1) displaying a large thumbnail image corresponding to the activated mode-specific item.

25. A method as in claim **24** wherein step d) further includes the step of:

d2) displaying text of an image name and date corresponding to the activated mode-specific item.

26. A method as in claim **22** wherein step b) further includes the step of:

b1) displaying a plurality of icons as the mode-specific items.

27. A method as in claim **26** wherein step d) further includes the step of:

d1) displaying a text feature list corresponding to the activated mode-specific item.

28. A method as in claim **26** wherein step d) further includes the step of:

d1) displaying text corresponding to a state of the activated mode-specific item.

29. A digital camera having an integrated user interface; comprising:

an image device for capturing image data;

a memory coupled to the imaging device for storing the image data as captured images;

a first set of navigation buttons having a first orientation and a second set of navigation buttons having a second orientation for controlling navigation;

a processor coupled to the image device, the memory, and to the first and second set of navigation buttons for controlling operation of the digital camera including a first operating mode and a second operating mode;

a primary display coupled to the processor, the primary display being divided into a first set of elements where all of the elements are aligned with the orientation of the first set of navigation buttons, and a second element displayed offset from the first set of elements in a direction aligned with the orientation of the second set of navigation buttons, wherein when the camera is in the first operating mode, a user navigates the first set of elements using the first set of navigation buttons; and

a status display coupled to the processor, the status display being divided into a third set of elements and a fourth element, wherein all the elements in the third set are aligned with the orientation of the first set of navigation buttons and the fourth element is displayed offset from the third set of elements in a direction of orientation corresponding to that of the second set of navigation buttons, wherein when the camera is in the second operating mode, the user navigates the third set of elements using the first set of navigation buttons, whereby navigation of the second operating mode in the status display is substantially similar to navigation of the first operating mode in the primary display.

30. The digital camera as in claim **29** further including a first status control button and a second status control button wherein the user navigates the status display using the first and second status control buttons.

31. A method for integrating a user interface across multiple operating modes of a digital camera, the digital camera including a display, and a navigational device including first and second buttons for controlling the display, the first button having a first orientation and the second button having a second orientation, the method comprising the steps of:

a) providing the digital camera with a first mode for capturing images;

b) providing the digital camera with a second mode and a third mode that are navigated by a user in substantially the same manner by;

c) displaying a set of menu categories on the display in the second mode by

i) displaying all of the menu categories in alignment with the orientation of the first button,

ii) scrolling the menu categories in response to the user pressing the first button, wherein the display indicates which of the menu categories is a currently active menu category, wherein the menu categories are scrolled-off the display and replaced by new menu categories, and

iii) displaying additional information corresponding to the currently active menu category in the display in a location that is offset from the menu categories in a direction of orientation corresponding to that of the second button; and

d) playing back a set of thumbnail images on the display in the third mode by

i) displaying all of the thumbnail images in alignment with the orientation of the first button,

ii) scrolling the thumbnail images in response to the user pressing the first button, wherein the display indicates which of the thumbnail images is a currently active thumbnail image, wherein the thumbnail images are scrolled-off the display and replaced by new thumbnail images, and

iii) displaying additional information corresponding to the currently active thumbnail image in the display in a location that is offset from the thumbnail images in a direction of orientation corresponding to that of the second button, wherein operation of the third mode is consistent with operation of the second mode to thereby increase ease of use of the digital camera.

* * * * *

EXHIBIT 2

US006177956B1

(12) **United States Patent**
Anderson et al.

(10) **Patent No.: US 6,177,956 B1**
(45) **Date of Patent: *Jan. 23, 2001**

(54) **SYSTEM AND METHOD FOR CORRELATING PROCESSING DATA AND IMAGE DATA WITHIN A DIGITAL CAMERA DEVICE**

(75) Inventors: **Eric C. Anderson**, San Jose; **Mike M. Masukawa**, Los Gatos, both of CA (US)

(73) Assignee: **FlashPoint Technology, Inc.**, San Jose, CA (US)

(*) Notice: This patent issued on a continued prosecution application filed under 37 CFR 1.53(d), and is subject to the twenty year patent term provisions of 35 U.S.C. 154(a)(2).

Under 35 U.S.C. 154(b), the term of this patent shall be extended for 0 days.

(21) Appl. No.: **08/735,705**

(22) Filed: **Oct. 23, 1996**

(51) **Int. Cl.**[7] **H04N 5/76**

(52) **U.S. Cl.** **348/231**; 348/220; 348/207; 348/222

(58) **Field of Search** 386/107, 117; 348/207, 220, 221, 231, 232, 233, 239, 576, 577, 222; 358/906, 909.1; 707/1, 200, 100, 104; 345/131, 132, 509, 515, 192, 193; H04N 5/225

(56) **References Cited**

U.S. PATENT DOCUMENTS

5,065,246	*	11/1991	Takemoto et al.	348/232
5,153,729	*	10/1992	Saito	348/232
5,402,170		3/1995	Parulski et al.	348/211
5,475,428		12/1995	Hintz et al.	348/263
5,475,441		12/1995	Parulski et al.	348/552
5,477,264		12/1995	Sarbadhikari et al.	348/231
5,493,335		2/1996	Parulski et al.	348/233
5,496,106	*	3/1996	Anderson	348/255
5,633,678	*	5/1997	Parulski et al.	348/231
5,806,072	*	9/1998	Kuba et al.	348/231

OTHER PUBLICATIONS

Martyn Williams, Review–NEC PC–DC401 Digital Still Camera, AppleLink Newbytes, Mar. 15, 1996, pp. 1–3.

* cited by examiner

Primary Examiner—Tuan Ho
(74) *Attorney, Agent, or Firm*—Sawyer Law Group LLP

(57) **ABSTRACT**

A system and method for correlating processing data and image data within a digital camera device comprises a capture device for gathering image data, a data cell manager for building a data cell containing processing data and for linking the data cell to the image data, and a processor device for processing and compressing the image data by using the processing data stored within the data cell.

18 Claims, 11 Drawing Sheets

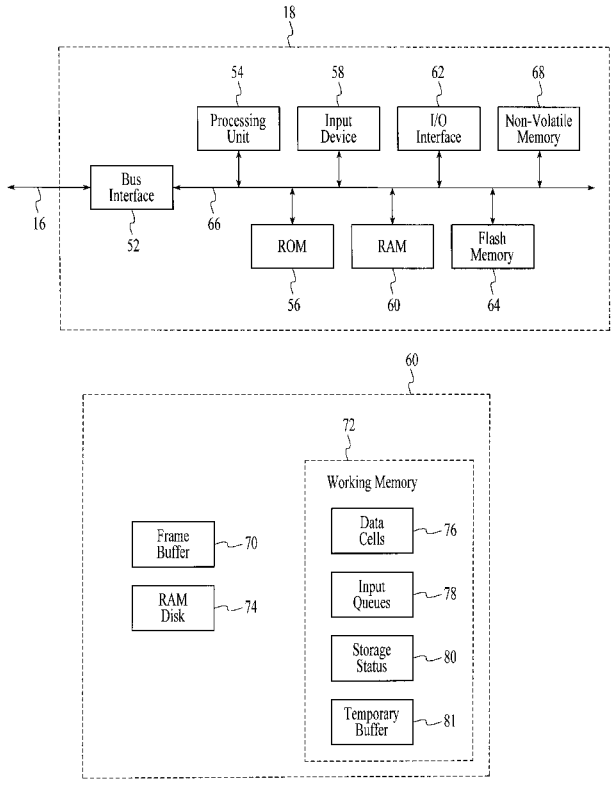

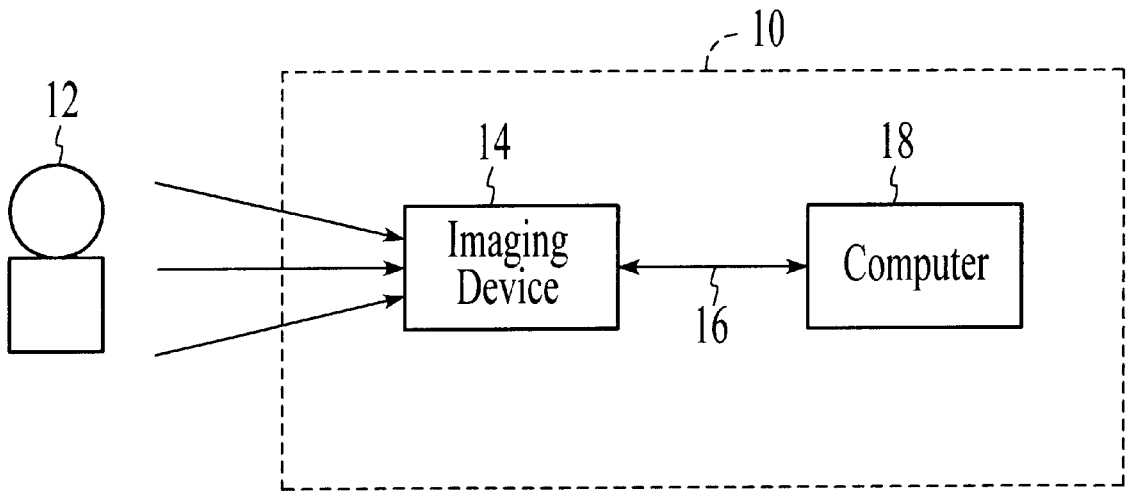

FIG. 1

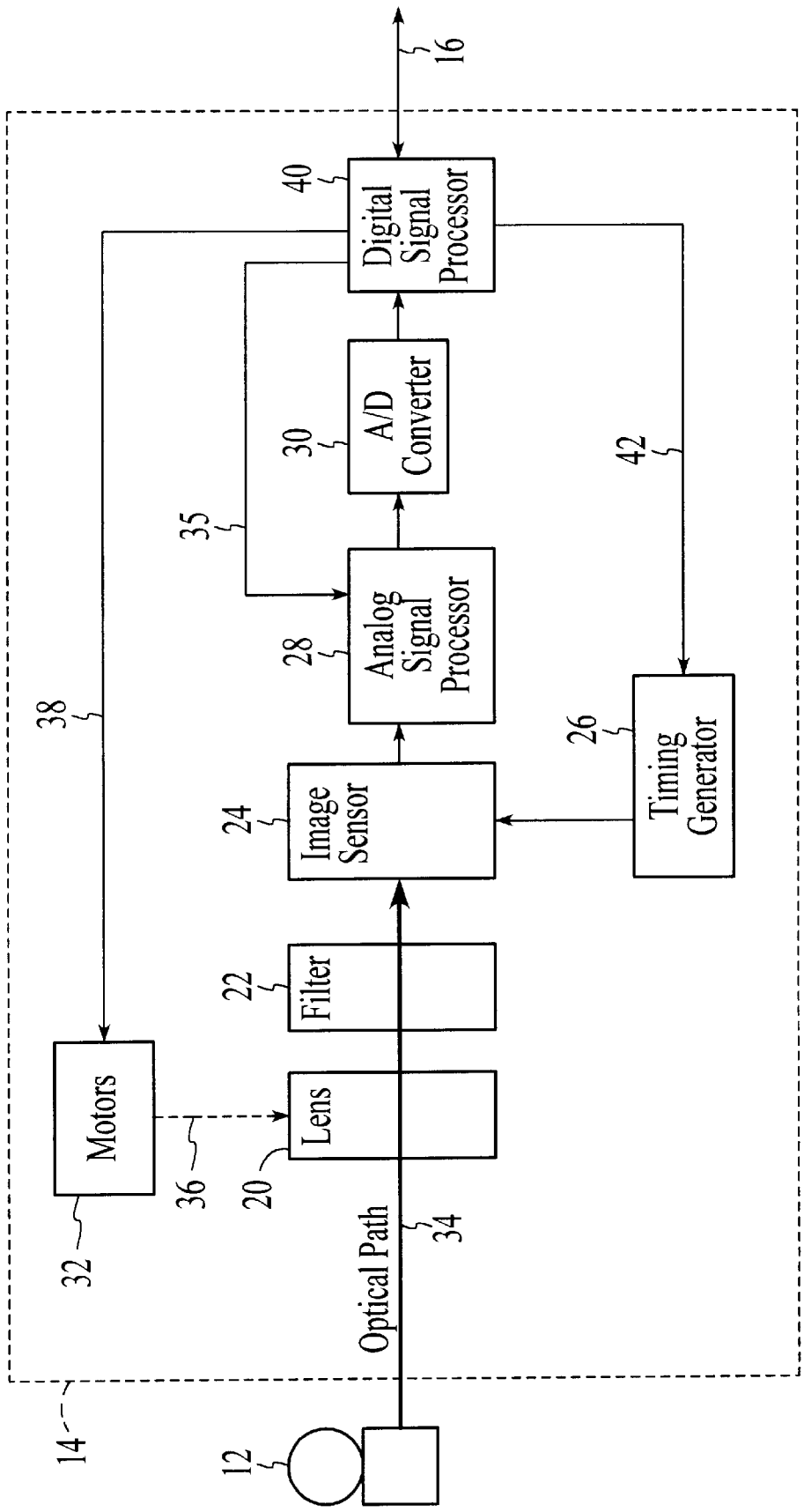
16
40
Digital Signal Processor
30
A/D Converter
42
35
28
Analog Signal Processor
38
26
Timing Generator
24
Image Sensor
22
Filter
Motors
Lens
36
20
32
Optical Path
34
14
12

FIG. 2

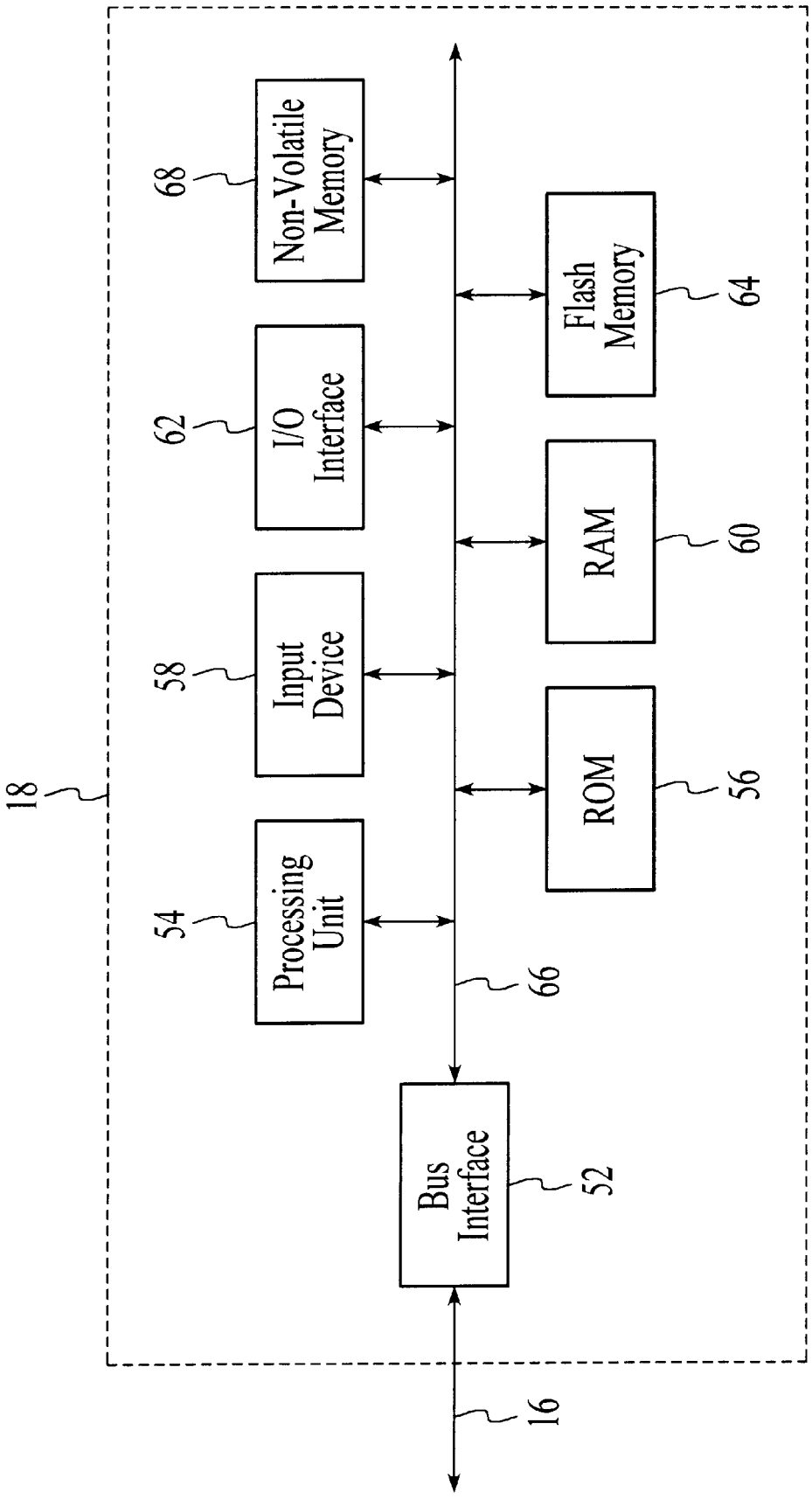
18
Processing Unit
54
Input Device
58
I/O Interface
62
Non-Volatile Memory
68
ROM
56
RAM
60
Flash Memory
64
66
Bus Interface
52
16

FIG. 3

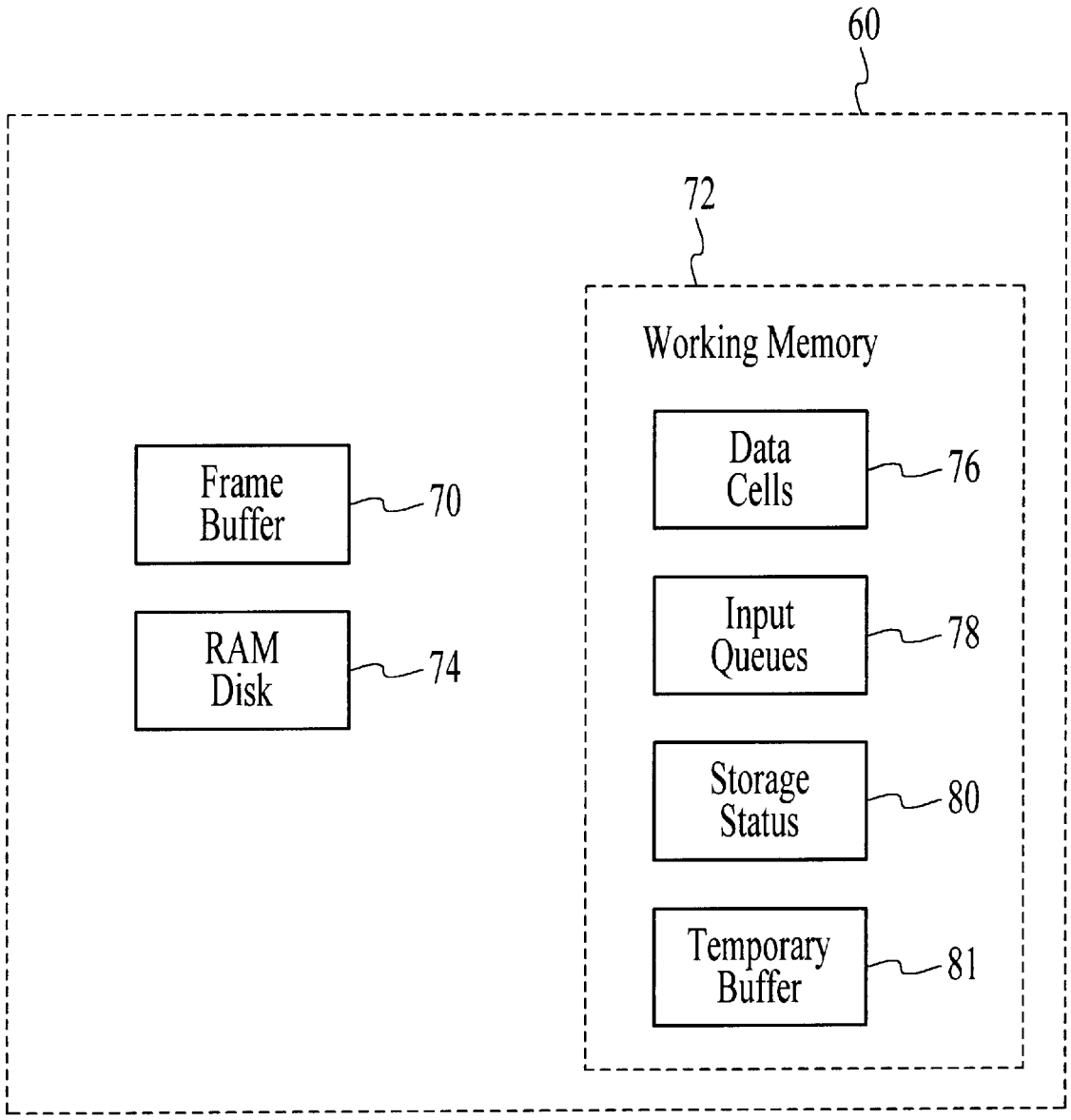
60
72
Working Memory
Data Cells
76
Input Queues
78
Storage Status
80
Temporary Buffer
81
Frame Buffer
70
RAM Disk
74

FIG. 4

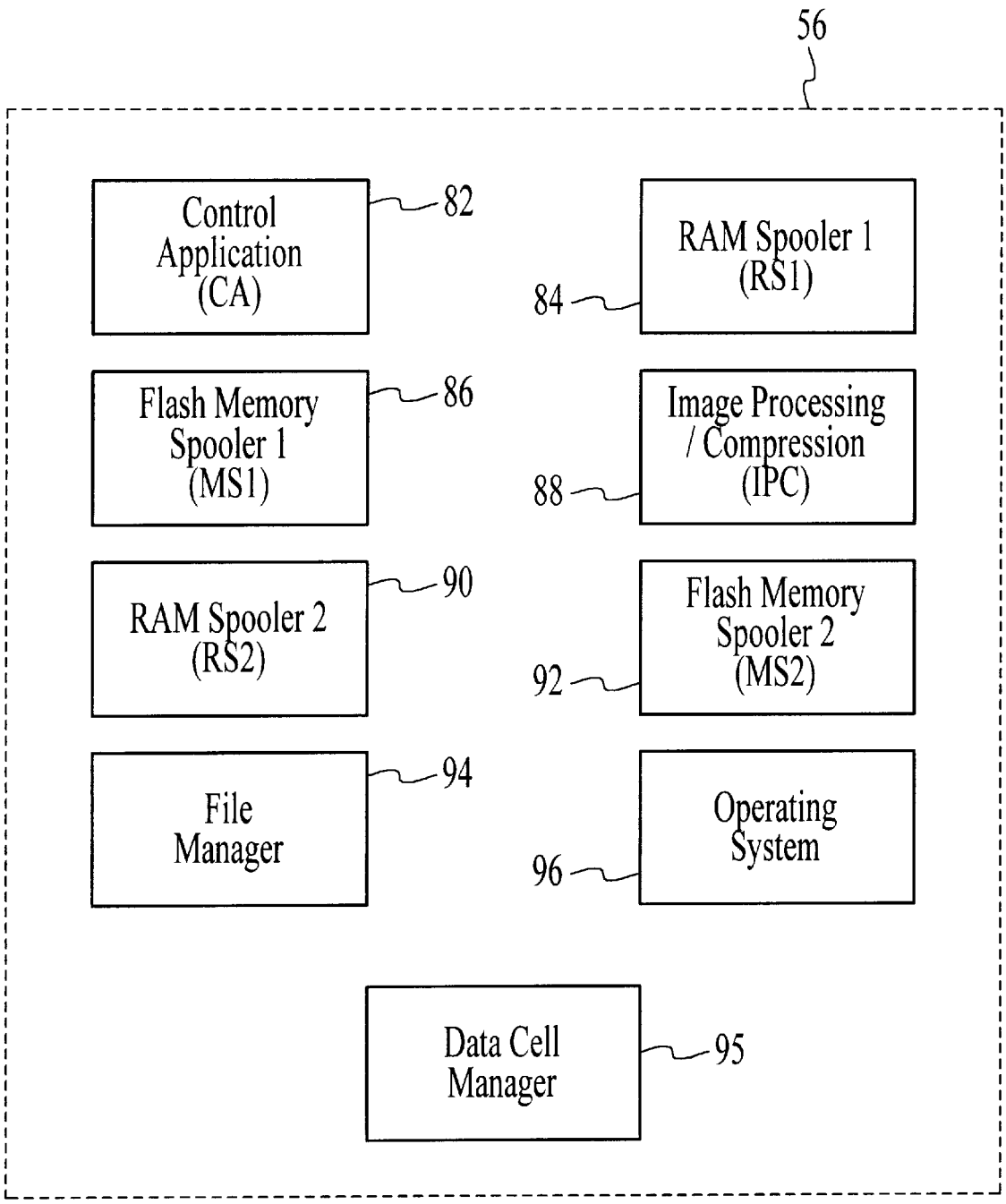
56
Control Application (CA)
82
RAM Spooler 1 (RS1)
84
Flash Memory Spooler 1 (MS1)
86
Image Processing / Compression (IPC)
88
RAM Spooler 2 (RS2)
90
Flash Memory Spooler 2 (MS2)
92
File Manager
94
Operating System
96
Data Cell Manager
95

FIG. 5

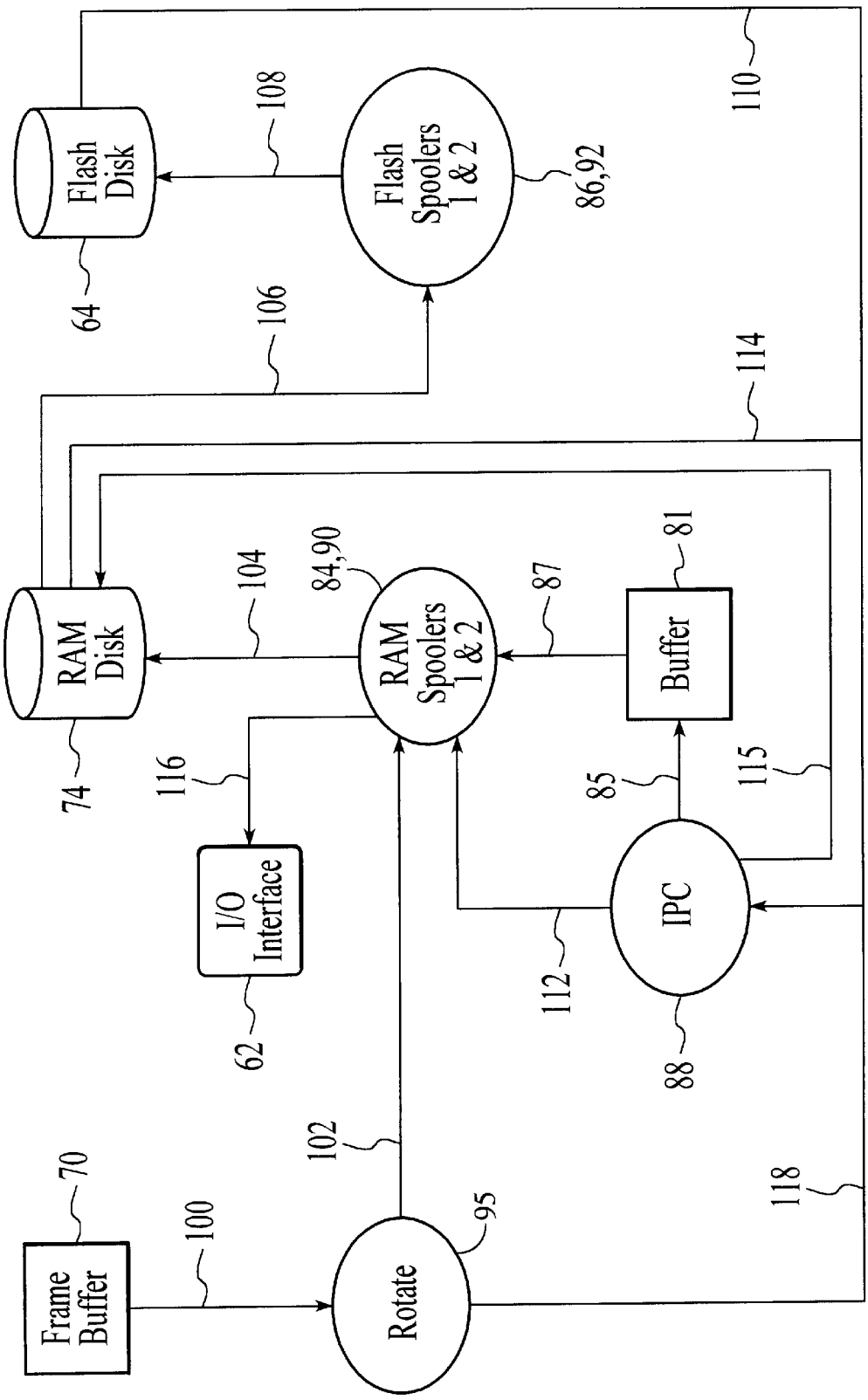
Flash Disk
64
108
Flash Spoolers 1 & 2
86,92
110
106
114
RAM Disk
74
104
84,90
RAM Spoolers 1 & 2
87
81
Buffer
116
I/O Interface
62
85
115
IPC
112
88
102
70
Frame Buffer
100
Rotate
95
118

FIG. 6

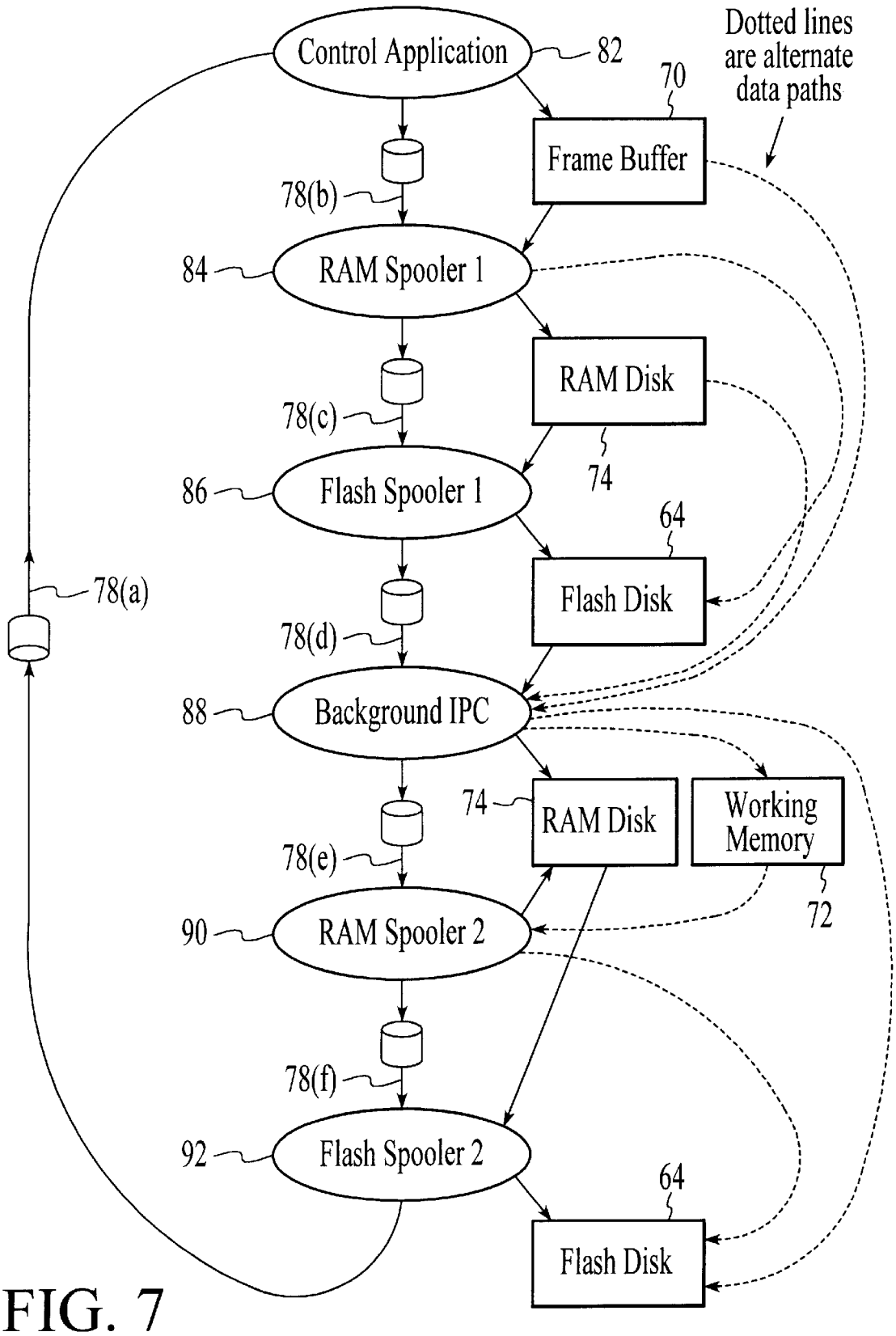
Control Application
82
Dotted lines are alternate data paths
70
Frame Buffer
78(b)
84
RAM Spooler 1
RAM Disk
78(c)
74
86
Flash Spooler 1
64
Flash Disk
78(a)
78(d)
88
Background IPC
74
RAM Disk
Working Memory
78(e)
72
90
RAM Spooler 2
78(f)
92
Flash Spooler 2
64
Flash Disk

FIG. 7

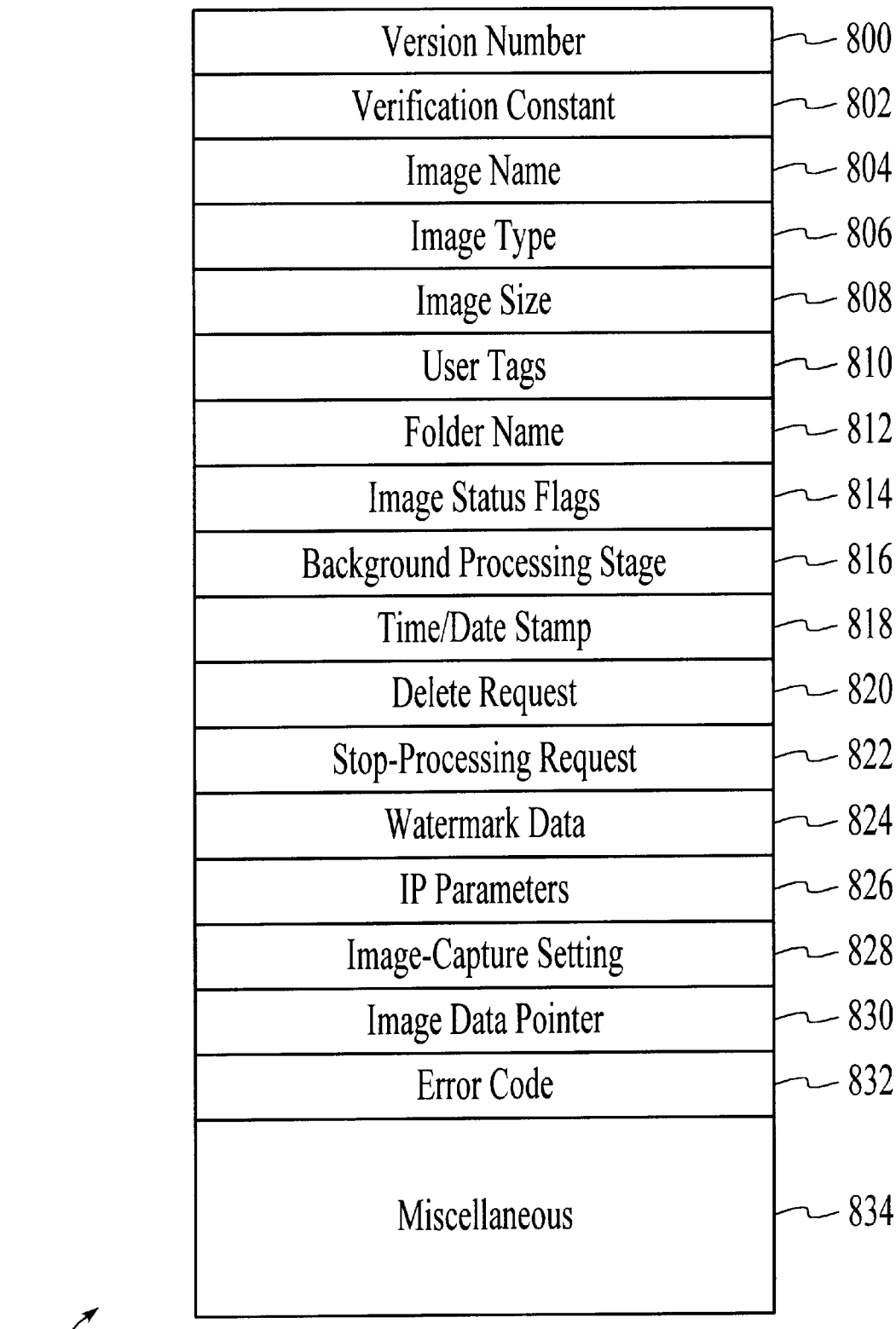
Version Number
800
Verification Constant
802
Image Name
804
Image Type
806
Image Size
808
User Tags
810
Folder Name
812
Image Status Flags
814
Background Processing Stage
816
Time/Date Stamp
818
Delete Request
820
Stop-Processing Request
822
Watermark Data
824
IP Parameters
826
Image-Capture Setting
828
Image Data Pointer
830
Error Code
832
Miscellaneous
834
76
Data Cell

FIG. 8

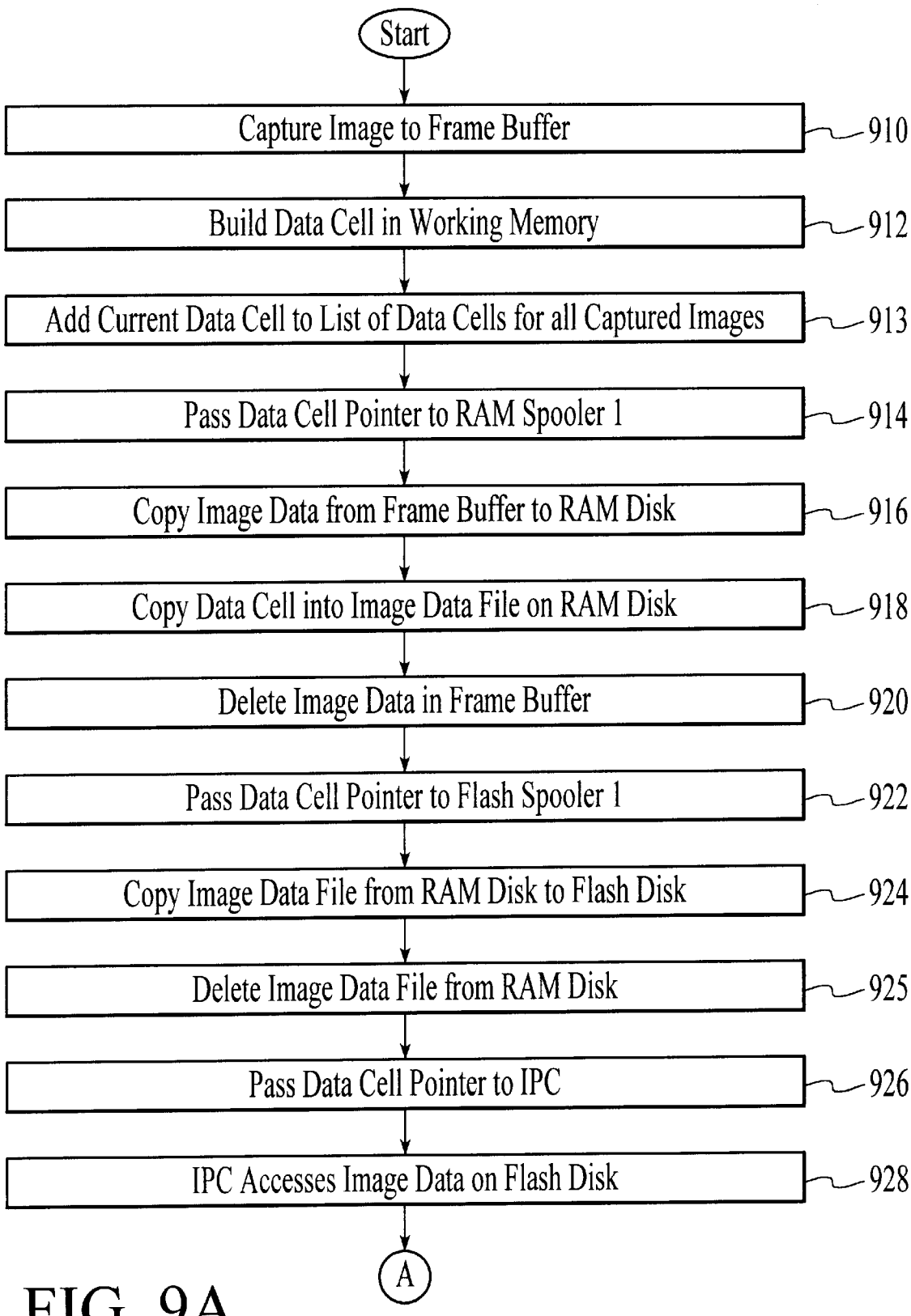
Start
Capture Image to Frame Buffer
910
Build Data Cell in Working Memory
912
Add Current Data Cell to List of Data Cells for all Captured Images
913
Pass Data Cell Pointer to RAM Spooler 1
914
Copy Image Data from Frame Buffer to RAM Disk
916
Copy Data Cell into Image Data File on RAM Disk
918
Delete Image Data in Frame Buffer
920
Pass Data Cell Pointer to Flash Spooler 1
922
Copy Image Data File from RAM Disk to Flash Disk
924
Delete Image Data File from RAM Disk
925
Pass Data Cell Pointer to IPC
926
IPC Accesses Image Data on Flash Disk
928
A

FIG. 9A

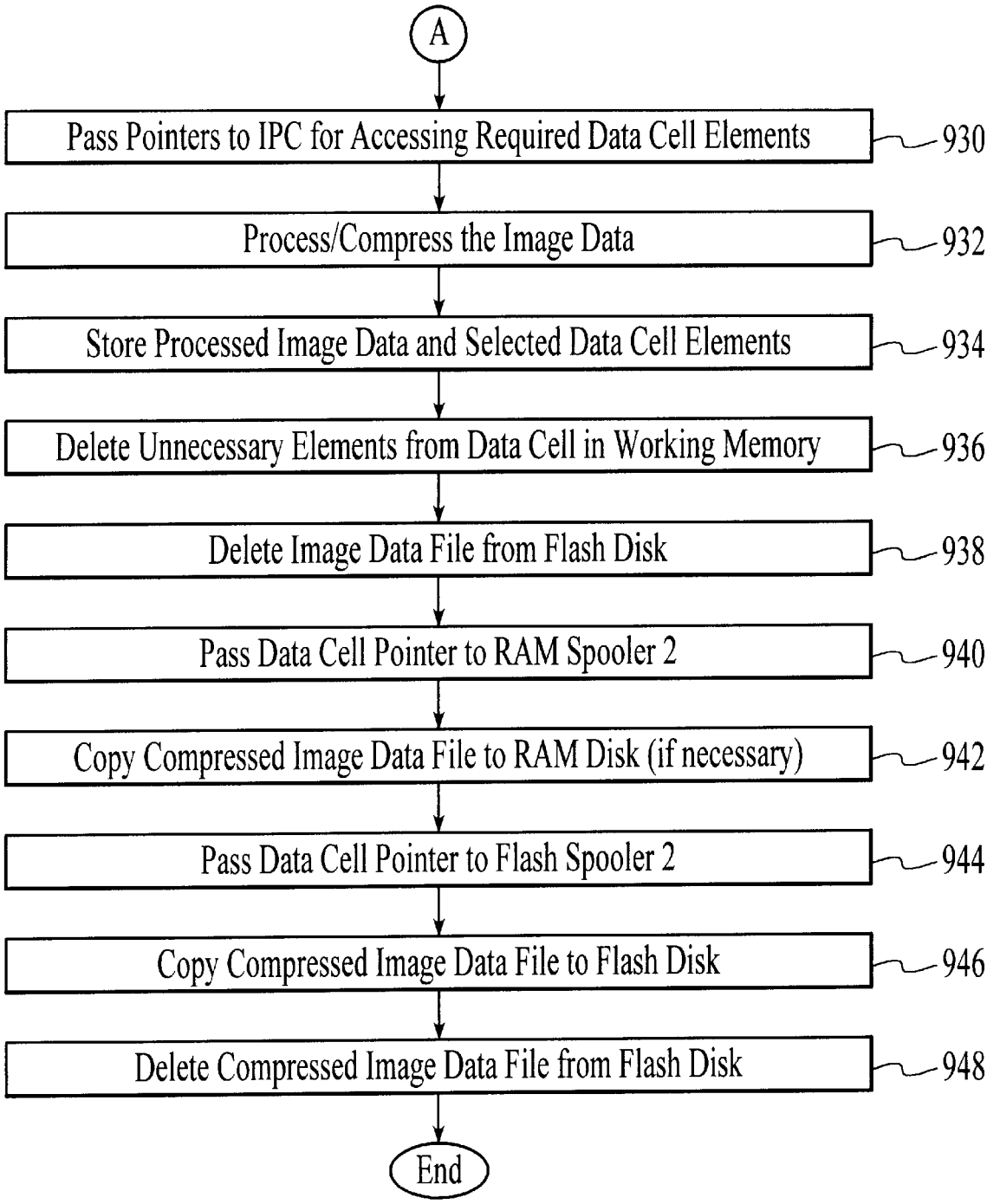
A
Pass Pointers to IPC for Accessing Required Data Cell Elements
930
Process/Compress the Image Data
932
Store Processed Image Data and Selected Data Cell Elements
934
Delete Unnecessary Elements from Data Cell in Working Memory
936
Delete Image Data File from Flash Disk
938
Pass Data Cell Pointer to RAM Spooler 2
940
Copy Compressed Image Data File to RAM Disk (if necessary)
942
Pass Data Cell Pointer to Flash Spooler 2
944
Copy Compressed Image Data File to Flash Disk
946
Delete Compressed Image Data File from Flash Disk
948
End

FIG. 9B

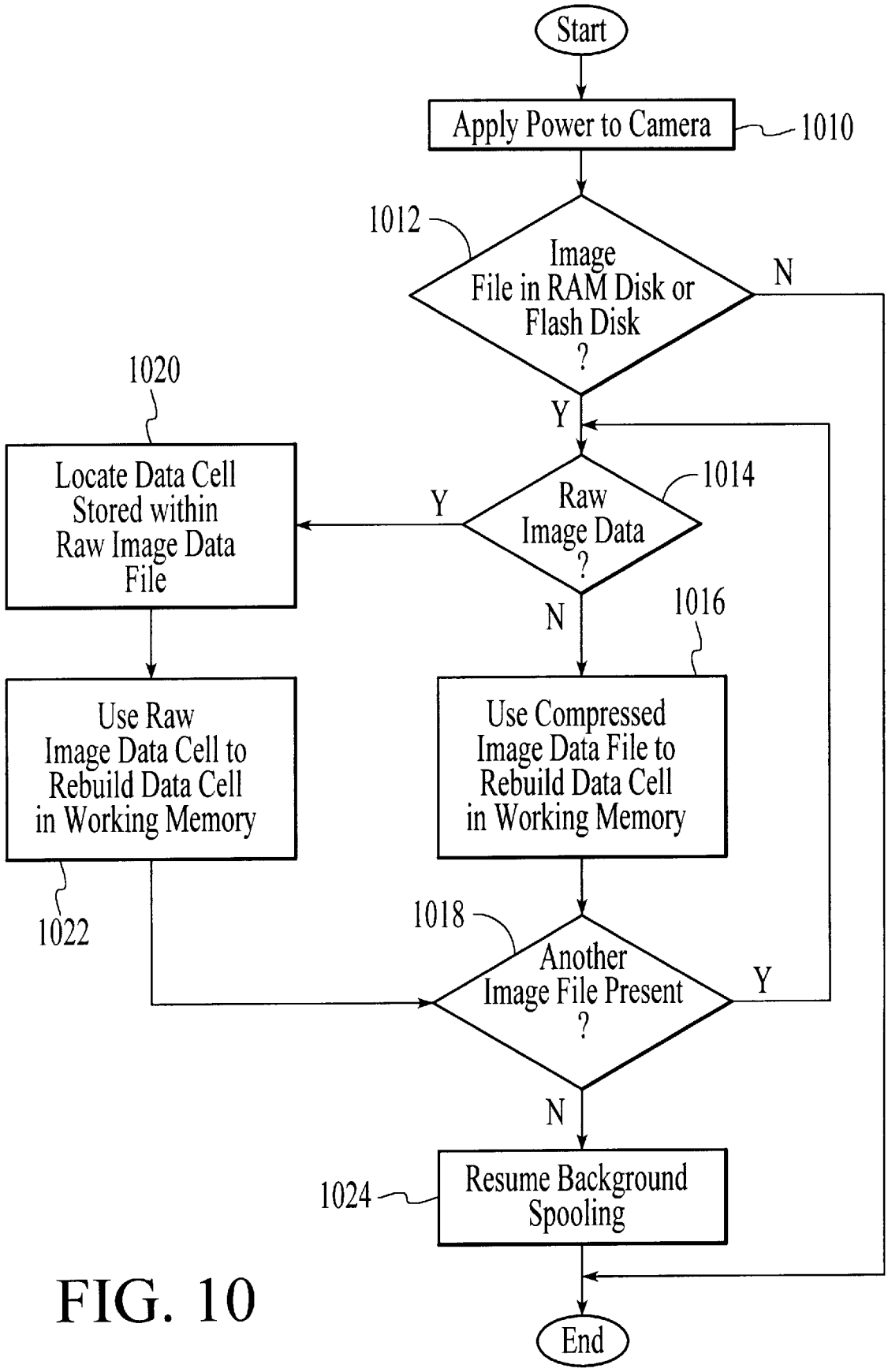
Start
Apply Power to Camera
1010
1012
Image File in RAM Disk or Flash Disk ?
N
Y
1020
Locate Data Cell Stored within Raw Image Data File
Y
Raw Image Data ?
1014
N
1016
Use Raw Image Data Cell to Rebuild Data Cell in Working Memory
Use Compressed Image Data File to Rebuild Data Cell in Working Memory
1022
1018
Another Image File Present ?
Y
N
1024
Resume Background Spooling
End

FIG. 10

SYSTEM AND METHOD FOR CORRELATING PROCESSING DATA AND IMAGE DATA WITHIN A DIGITAL CAMERA DEVICE

BACKGROUND OF THE INVENTION

1. Field of the Invention

The present invention relates in general to digital camera technology and also relates more particularly to a system and method for correlating processing data and image data within a digital camera device.

2. Description of the Background Art

An important digital still-camera performance feature is the number of captured images that can be stored in the camera's finite memory. To maximize the image-carrying capacity of digital still-cameras, it is desirable to compress the images prior to storage. Conventional digital cameras typically perform image processing on the captured raw image data and then use a high-quality image compression routine (such as JPEG) to compress the image data.

Furthermore, digital cameras may frequently be required to capture and concurrently process multiple successive sets of captured image data. Each captured image, however, has important related information which may be needed during the image processing and compression operations, as well as subsequently. Examples of such processing and compression data might include camera settings (e.g., focus, aperture, and white-balance information), time and date of image capture and image processing parameters.

Each captured image potentially has a different set of relevant processing information. Therefore, each captured image within a digital camera may require a separate and unique set of processing data. Furthermore, to permit effective access to these unique sets of processing and compression data, each of the sets of captured image data and the corresponding processing data must be linked together. Efficient access to the processing data at the appropriate time is thus an important feature of modern digital cameras. Therefore, what is needed is an improved system and method for correlating processing data and image data within a digital camera device.

SUMMARY OF THE INVENTION

The present invention is a system and method for correlating processing data and image data within a digital camera device. In the present invention, an imaging device captures an image in response to an image capture request and responsively produces corresponding raw image data which is temporarily stored into a frame buffer. A data cell manager then builds a corresponding data cell containing various types of processing data which the data cell manager links to the captured raw image data. The processing data may include information such as image-capture settings, image size, user tags and image-processing parameters. The data cell is preferably stored in working memory within the camera DRAM.

A first RAM spooler then typically transfers the raw image data into an individual image data file within a RAM disk in the camera DRAM. Next, the data cell manager makes a copy of the data cell in working memory and places the copy into the image data file stored in the RAM disk for recovery purposes. The image data in the frame buffer is then deleted to allow a camera user to capture another image.

A first flash spooler next transfers the raw image data file from the RAM disk to a flash memory which preferably is a removable flash disk. An image processor device then accesses, processes and compresses the raw image data using the corresponding processing data stored in the data cell. The image processor device may then directly store the compressed data into a compressed image data file on the RAM disk, or alternately, a second RAM spooler may store the compressed image data into a compressed image data file on the RAM disk. The cell manager then stores selected necessary processing data from the corresponding data cell into the compressed image file. The cell manager also deletes unnecessary processing data from the data cell stored in working memory. A second flash spooler then transfers the compressed image data file from the RAM disk to the flash memory.

The data cell thus allows specific camera settings which exist at image capture time to be effectively saved and linked to the corresponding image data, thereby permitting subsequent changes of the camera settings without losing those camera settings previously saved in the data cell. The present invention also allows the camera device to recover from disruptive events such as power failures which threaten to damage the captured image data. Following a disruptive event, the data cell manager may locate the copy of the data cell which is stored in the image data file and then use this copied data cell to rebuild the original data cell stored within working memory in the camera DRAM. Once the original data cell has been reconstructed, the camera may then successfully complete the processing, compression and storage operations for the captured image data.

BRIEF DESCRIPTION OF THE DRAWINGS

FIG. **1** is a block diagram showing a digital camera device according to the present invention;

FIG. **2** is a block diagram showing a preferred embodiment of the FIG. **1** imaging device according to the present invention;

FIG. **3** is a block diagram showing a preferred embodiment of the FIG. **1** computer of the present invention;

FIG. **4** is a block diagram showing a preferred embodiment of a Random Access Memory (RAM) of the FIG. **3** computer;

FIG. **5** is a block diagram showing a preferred embodiment of a Read Only Memory (ROM) of the FIG. **3** computer;

FIG. **6** is a block diagram showing a preferred embodiment of the FIG. **1** camera device according to the present invention;

FIG. **7** is a block diagram showing priority levels of preferred processes and corresponding image data paths;

FIG. **8** is a block diagram of the preferred embodiment for an exemplary data cell according to the present invention;

FIG. **9**A is the initial portion of a flowchart showing the operation of the present invention using the data cell of FIG. **8**;

FIG. **9**B is the final portion of a flowchart showing the operation of the present invention using the data cell of FIG. **8**; and

FIG. **10** is a flowchart showing preferred method steps for using the present invention to recover from a disruptive event within a digital camera device.

DETAILED DESCRIPTION OF THE PREFERRED EMBODIMENT

The present invention comprises a system and method for correlating processing data and image data within a digital

camera device and includes an imaging device for capturing image data, a data cell manager for building a data cell containing processing data and for linking the data cell to the captured image data, and a processor device for processing and compressing the captured image data by using the processing data stored within the data cell.

Referring now to FIG. **1**, a block diagram of a preferred embodiment of a camera **10** is shown. Camera **10** may be used to capture a set of image data representing an object **12**. Camera **10** preferably comprises an imaging device **14**, an external bus **16** and a computer **18**. Imaging device **14** is optically coupled to object **12** and electrically coupled via external bus **16** to computer **18**. Once a photographer has focused imaging device **14** on object **12** and, using a capture button or some other means, instructed camera **10** to capture an image of object **12**, computer **18** commands imaging device **14** via external bus **16** to capture raw image data representing object **12**. The captured raw image data is transferred over external bus **16** to computer **18** which performs various image processing functions on the image data before storing it in its internal memory. External bus **16** also passes various status and control signals between imaging device **14** and computer **18**.

Referring now to FIG. **2**, a block diagram of a preferred embodiment of imaging device **14** is shown. Imaging device **14** preferably comprises a lens **20** having an iris, a filter **22**, an image sensor **24**, a timing generator **26**, an analog signal processor (ASP) **28**, an analog-to-digital (A/D) converter **30**, a digital signal processor (DSP) **40**, and one or more motors **32**.

In operation, imaging device **14** captures an image of object **12** via reflected light impacting image sensor **24** along optical path **34**. Image sensor **24** responsively generates a set of raw image data representing the captured image **12**. The raw image data is then routed through ASP **28**, A/D converter **30** and DSP **40**. DSP **40** has outputs coupled to lines **35**, **38** and **42** for controlling ASP **28**, motors **32** and timing generator **26**. From DSP **40**, the raw image data passes over external bus **16** to computer **18**.

Referring now to FIG. **3**, a block diagram of a preferred embodiment of computer **18** is shown. Computer **18** comprises a bus interface **52**, a processing unit **54**, a read-only memory (ROM) **56**, an input device **58**, a random access memory (RAM) **60**, an I/O interface **62**, a flash memory **64** and a non-volatile memory **68** coupled together via an internal bus **66**. In the preferred embodiment, computer **18** is embedded as part of camera **10** using a conventional architecture. However, those skilled in the art will recognize that in an alternate embodiment, computer **18** may be a discrete computer system.

Bus interface **52** is preferably a bi-directional first-in, first-out interface for receiving the raw image data and imaging device **14** control signals passed between computer **18** and DSP **40**. Interface **52** has data lines coupled to both external bus **16** and internal bus **66**. Processing unit **54** executes programming instructions stored in ROM **56** and RAM **60** to perform various operations. ROM **56** stores a set of computer readable program instructions which control how processing unit **54** accesses, transforms and outputs the image data. While ROM **56** is employed as a conventional non-volatile memory device for practicing the present invention, those skilled in the art will recognize that in alternate embodiments ROM **56** could be replaced with a functionally equivalent computer useable medium such as a compact disk and drive, a floppy disk and drive, or a flash memory.

Input device **58** preferably comprises a series of control buttons which generate signals translated by processing unit **54** into an image capture request, an operating mode selection request, and various control signals for imaging device **14**. In an alternate embodiment in which computer **18** is a discrete computer system, input device **58** also includes a keyboard and mouse-type controller.

I/O Interface **62** is coupled to internal bus **66** and has an external port connector for coupling computer **18** with a host computer (not shown) for downloading image data stored in RAM **60** and/or flash memory **64**. At the user's choice or when camera **10** is completely filled with image data, I/O Interface **62** enables the image data to be down-loaded, thus freeing up storage space for future sets of image data.

Flash memory **64** serves as an additional image data storage area and is preferably a non-volatile device, readily removable and replaceable by a user. Thus, a user who possesses several flash memories **64** may replace a full flash memory **64** with an empty flash memory **64** to effectively expands the picture taking capacity of camera **10**. In the preferred embodiment of the present invention, flash memory **64** is a flash disk. Non-volatile memory **68** stores an image counter whose current value becomes an identifier for each new set of image data captured by camera **10**. The counter is preferably incremented each time a new image is captured. In the preferred embodiment, non-volatile memory **68** is either an EEPROM or a battery-backed SRAM.

Referring now to FIG. **4**, a block diagram of a preferred embodiment of RAM **60** is shown. RAM **60** is comprised of a frame buffer **70**, a working memory **72** and a RAM disk **74**. Frame buffer **70** preferably comprises a dedicated space of contiguous memory suitable for storing the raw image data generated by image sensor **24**. In alternate embodiments, frame buffer **70** may be memory space allocated within working memory **72**. The function of frame buffer **70** is to store the most recently captured set of raw image data until computer **18** either stores the raw image data in RAM disk **74** or transfers it to an image processing unit.

RAM disk **74** is a memory area within RAM **60** organized in a "sectored" format similar to that of conventional hard disk drives. The RAM disk **74** function is to store image data. RAM disk **74**, in conjunction with flash memory **64**, sets the maximum image holding capacity of camera **10**. Once both flash memory **64** and RAM disk **74** have been filled with compressed image data, the insertion of a new flash memory **64** or down-loading the image data via I/O interface **62** will enable camera **10** to continue capturing new images.

Working memory **72** is comprised of data cells **76**, input queues **78**, storage status **80** and temporary buffer **81**. Data cells **76** are data structures and each data cell **76** is uniquely associated with particular captured image data. A data cell **76** is comprised of a plurality of data cell elements which are further described below in conjunction with FIG. **8**. Input queues **78** are data structures comprised of a plurality of data cell "pointers" each corresponding to data cells **76**. In the preferred embodiment, input queues operate on a first-in/first-out basis.

Storage status **80** is a data structure describing the remaining available memory in both RAM disk **74** and flash memory **64**. Storage status **80** contains the following four conditional variables: "RAM Disk Raw File Space," "RAM Disk Compressed File Space," "Flash Memory Raw File Space" and "Flash Memory Compressed File Space." Each

of the four conditional variables is set to one of three values: FULL, ALMOST FULL or OK. If the variable is set to "OK," then space is available for that particular file type (i.e., a raw file or a compressed file) on that particular storage resource (i.e., RAM disk **74** or flash memory **64**). If the variable is set to "ALMOST FULL" then space is not currently available for that particular file type on that particular storage resource, but there will be space in the future. If the variable is set to "FULL" then, absent an increase in available space on storage resources (due, for example, to downloading data or replacing storage units), no space is available for that particular file type on that particular storage resource, nor will space be available in the future. Temporary buffer **81** of working memory **72** is provided for temporarily storing data and/or program code.

Referring now to FIG. **5**, a block diagram of a preferred embodiment of ROM **56** is shown. ROM **56** preferably contains code for processes **82** through **96**, including a control application (CA) **82**, a RAM spooler **1** (RS1) **84**, a flash memory spooler **1** (MS1) **86**, image processing/compression (IPC) **88**, a RAM spooler **2** (RS2) **90**, a flash memory spooler **2** (MS2) **92**, a file manager **94**, a data cell manager **95** and an operating system **96**. In alternate embodiments, the FIG. **5** processes **82** through **96** may be stored in various computer memory types other than ROM **56**.

A "spooler" is herein defined as a routine for transferring data from one process or device to a second process or device. RAM spooler **1** (**84**) transfers raw image data into RAM disk **74**, and flash memory spooler **1** (**86**) transfers raw image data into flash memory **64**. RAM spooler **2** (**90**) transfers compressed image data into RAM disk **74** or to I/O interface **62**, and flash memory spooler **2** (**92**) transfers compressed image data into flash memory **64**.

Control application **82** preferably comprises program instructions for controlling the operation of camera **10** which are executed using processing unit **54**. For example, control application **82** controls data cell manger **95** to create and maintain data cells **76**. Image processing/compression **88** compresses the raw image data to maximize the image-carrying capacity of camera **10**, and also processes the raw image data to permit readily displaying the captured image data on a host computer. In the preferred embodiment, processes **82** through **96** are comprised of a series of software steps implemented on top of a multithreaded operating system and may therefore run in parallel operation. Data cell manager **95** controls and coordinates data cells **76** and is further discussed below in conjunction with FIGS. **7** through **10**.

Referring now to FIG. **6**, a block diagram of the preferred embodiment for camera **10** is shown. In FIG. **6**, frame buffer **70** receives and stores raw image data previously captured by imaging device **14**. Frame buffer **70** then provides the raw image data via line **100** to rotate process **95**.

Process **95** rotates the captured image if necessary and then transfers control of the raw image data to RAM spooler **1** (**84**) using line **102**. Alternately, if RAM disk **74** is full, rotate process **95** may transfer control of the raw image data directly to image processing/compression (IPC) **88** using line **118**. If RAM spooler **1** (**84**) receives control of the raw image data, it then stores the raw image data into RAM disk **74** using line **104**.

Flash spooler **1** (**86**) may then access the raw image data from RAM disk **74** via line **106** and store it into flash memory **64** using line **108**. Alternately, if flash memory **64** is full, RAM disk **74** may provide the raw image data directly to IPC **88** using line **114**. If flash spooler **1** (**86**) stores the raw image data into flash memory **64**, then IPC **88** typically accesses the stored raw image data using line **110** and processes the raw data to responsively obtain compressed image data.

IPC **88** may bypass RAM spooler **2** (**90**) and store the compressed data directly to RAM disk **74** via line **115**, or alternately, if RAM disk **74** is temporarily full, IPC **88** may write the compressed data to temporary RAM buffer **81** via line **85**. RAM spooler **2** (**90**) may then access the compressed image data via line **87** and write the accessed data into RAM disk **74** via line **104**. RAM spooler **2** (**90**) may also download the compressed image data to I/O interface **62** using line **116**. Once the compressed data is in RAM disk **74**, flash spooler **2** (**92**) then accesses the data via line **106** and writes the compressed data into flash memory **64**.

The present invention may thus process and store a sequence of captured images received from imaging device **14**. Although the above example traces the typical data path for a single captured image, the present invention may readily operate on a plurality of captured images progressing through various stages of camera **10**. Therefore, multiple sets of image data may exist simultaneously within computer **18**. The current processing stage for a specific set of image data is preferably indicated by flags located in the image data's unique data cell **76**.

Referring now to FIG. **7**, a block diagram of priority levels for processes **84** through **92** of the preferred embodiment is shown. Background processes **84** through **92** are preferably allotted processing unit **54** time depending on their priority level. This priority level is related to the goal of rapidly emptying frame buffer **70** to enable rapid capture of successive sets of image data.

Control application **82** transfers raw image data from imaging device **14** to frame buffer **70** and may supersede any of background processes **84** through **92**. The background process with the highest priority is RAM spooler **1** (**84**) which moves raw image data out of frame buffer **70** to RAM disk **74**. The second highest priority is flash memory spooler **1** (**86**) which moves raw image data out of RAM disk **74** to flash memory **64**. The third highest priority is Image Processing/Compression **88** which accesses raw image data and responsively processes and compresses the image data before storing it as compressed image data into RAM disk **74**, or if RAM disk **74** is full, into temporary RAM buffer **81** of working memory **72**. The fourth highest priority is RAM spooler **2** (**90**) which, if necessary, may move compressed image data out of working memory **72** into RAM disk **74**. The lowest priority is flash memory spooler **2** (**92**) which moves the compressed image data out of RAM disk **74** into flash memory **64**. Those skilled in the art will recognize that either a greater or a lesser number of priority levels than the preferred five may be used in the present invention. Also, alternate embodiments may establish different criteria for routing the captured image data, depending upon memory resources available and/or the maximum image capture rate desired. File manager process **94** and operating system process **96** are not assigned specific priority levels since they either operate in the background or under interrupt conditions.

Processes **82** through **92** preferably each has a respective input queue **78**(*a*) through **78**(*f*) which operates on a first-in/first-out basis. If one of processes **82** through **92** has a data cell **76** pointer in its input queue, then only that process can access and perform operations on the image data associated with that particular data cell **76**. The data cell pointers are

passed between processes **82** through **92** in a specific order until the original raw image data has been fully processed, compressed and stored in a memory resource.

The priority level scheme introduced above may "block" one or more processes **84** through **92** even though a data cell **76** pointer is in its input queue **78**. For example, since moving raw image data out of frame buffer **70** has the highest priority, if a user repeatedly captures images in rapid succession, RAM spooler **1** (**84**) will continue to operate until RAM disk **74** becomes filled with raw image data. While RAM spooler **1** (**84**) is operating, all of the other lower priority processes **86** through **92** will be "blocked" (i.e., idled), even though some of the lower priority processes **86** through **92** may still have data cell **76** pointers in their input queues **78**. This blocking of lower priority processes applies to all priority levels. For example, operation of flash memory spooler **1** (**86**) will block image processing/compression **88**, RAM spooler **2** (**90**) and flash memory spooler **2** (**92**), and operation of image processing/compression **88** will block RAM spooler **2** (**90**) and flash memory spooler **2** (**92**), and so on, until the image data has been fully processed, compressed and stored in memory. Furthermore, if a lower priority ROM process is currently operating and a higher priority ROM process requires processing unit **54**, then the lower priority ROM process is immediately blocked until the higher priority ROM process has completed its operations.

Referring now to FIG. **8**, a block diagram of the preferred embodiment for an exemplary data cell **76** is shown. In the preferred embodiment, data cell manager **95** allocates a structure and then builds a separate data cell **76** to correspond with each set of captured image data. An exemplary data cell **76** typically includes data cell elements **800** through **834**, however various additional data cell elements may alternatively be included by data cell manager **95**.

Version number **800** indicates which version of data cell **76** is presently in use, so that data cell manager **95** can work with more than one version of data cell **76**. Verification constant **802** is a known constant value used as a check by data cell manager **95** to verify the validity of the data comprising data cell **76**. Image name **804** identifies the particular captured image which corresponds to data cell **76**. Image name **804** is of the preferred form "IMXXXXXX," where "XXXXXX" is the image number. In the preferred embodiment, the image number "XXXXXX" is not reset, so when images are down-loaded to a host computer, the down-loaded image names **804** will not conflict with image names **804** of image files previously downloaded to the host computer. However, in an alternate embodiment the image number "XXXXXX" could be reset each time image data is down-loaded from camera **10**. Also the "IM" in the image identifier may be replaced with "IO."

Image type **806** specifies the format of the captured image. The image type **806** is typically in the form "YYY," is preferably either CFA or JPG which both refer to sets of compressed image data. Image size **808** includes information about the height and width (number of pixels) of the corresponding captured image. Image processing and compression (IPC) **88** uses image size **808** to correctly process a given set of captured image data. User tags **810** include a variety of tags which may be set by a camera **10** user. For example, a user may set a specific user tag **810** to identify whether a particular captured image is a time-lapse image.

Folder name **812** contains the name of the specific folder in which a particular captured image file resides. Image status flags **814** contain information about how much image processing has been performed on the corresponding image data (e.g., whether the image data is raw or compressed data, and whether the image data is in frame buffer **70**, RAM **60**, temporary buffer **81** or flash disk **64**). The image status flags **814** store either a "Raw Image Data In Frame Buffer" flag, a "Raw Image Data In RAM Disk" flag, a "Compressed Image Data In RAM Disk" flag, a "Raw Image Data In Flash memory" flag, a "Compressed Image Data In Flash memory" flag, or a "Compressed Image Data In Temporary Buffer" flag. Background processing stage **816** indicates the current stage of the image data within the background spooling processes **84** through **92** (FIG. **7**).

Time/date stamp **818** contains data identifying the time and date that the image data was captured by camera **10**. If selected, delete request **820** causes the corresponding image file to be deleted from camera **10**. If selected, stop-processing request **822** causes camera **10** to complete the current process and then to temporarily suspend further processing of the corresponding image data. Watermark data **824** selects a particular watermark image and also specifies where the selected watermark is placed on the captured image.

Image processing (IP) parameters **826** contain information which IPC **88** uses during processing of the corresponding image data. For example, IP parameters **826** may include the compression level and color depth for a particular captured image. Image-capture settings **828** may include the various camera **10** settings which existed when the corresponding image data was captured. For example, image-capture settings **828** may include camera **10** focus values, shutter speed, aperture, white-balance settings and exposure values.

Image data pointer **830** is a pointer to identify the location of the captured image data which corresponds to data cell **76**. Error code **832** stores information to indicate whether processing of the image data was successful for each of the background spooling processes **84** through **92**. Miscellaneous **834** contains a variety of "housekeeping" information used by data cell manager **95** to control and coordinate the function of exemplary data cell **76**.

Referring now to FIG. **9**A, the initial portion of a flowchart showing the preferred operation of the present invention is shown. Initially, camera **10** captures **910** a selected image and stores the captured image data into frame buffer **70**. Data cell manager **95** responsively builds **912** a data cell **76** in working memory **72** as described above in conjunction with FIG. **8**. Data cell manager **95** then adds **913** the data cell **76** to a data cell list identifying data cells **76** for all captured images. To subsequently access a given captured image, data cell manager **95** typically identifies the data cell **76** for the given image and then locates the corresponding image data file. Next, data cell manager **95** generates a pointer to the location of data cell **76** in working memory **72**, and then passes **914** the generated data cell **76** pointer to RAM spooler **1** (**84**) by placing the data cell **76** pointer in the RAM spooler **1** (**84**) input queue **78**(*b*).

RAM spooler **1** (**84**) then copies **916** the captured image data from frame buffer **70** to RAM disk **74** to create an image data file. Next, data cell manager **95** makes **918** a copy of the data cell **76** located in working memory **72** and places the data cell **76** copy into the newly-created image data file on RAM disk **74**. RAM spooler **1** (**84**) then deletes **920** the image data from frame buffer **70**.

Next, data cell manager passes **922** the generated data cell **76** pointer to flash spooler **1** (**86**) by placing the data cell **76** pointer in the flash spooler **1** (**86**) input queue **78**(*c*). Flash

spooler **1** (**86**) then copies **924** the image data file from RAM disk **74** to flash disk **64** and deletes **925** the image data file from RAM disk **74**. Next, data cell manager **95** passes **926** the data cell **76** pointer to image processing/compression (IPC) **88** by placing the data cell **76** pointer in the IPC **88** input queue **78**(*d*). IPC **88** then accesses **928** the image data stored in flash disk **64** to begin the processing and compressing operations. The FIG. **9**A method then proceeds to FIG. **9**B.

Referring now to FIG. **9**B, the final portion of a flowchart showing the operation of the present invention is shown. Continuing the process steps of FIG. **9**A, data cell manager **95** passes **930** to IPC **88** a number of pointers for locating specified data cell **76** elements. In the preferred embodiment, the specified data cell **76** elements typically may include IP parameters **826**, image size **808**, watermark data **824** and image-capture settings **828**. IPC **88** responsively uses these received pointers to locate and access those specified data cell **76** elements which are needed to effectively process and compress the captured image data.

IPC **88** then advantageously uses this information accessed from data cell **76** to process and compress **932** the captured image data. Next, IPC **88** stores **934** the processed and compressed image data into an image data file in RAM disk **74**, if space is available. If no space is currently available in RAM disk **74**, IPC **88** temporarily stores the compressed image data into another available memory location, such as temporary buffer **81** in working memory **72**. In step **934**, data cell manager **95** also stores selected data cell **76** elements into the compressed image data file created and stored by IPC **88**. Data cell manager **95** thus modifies the copy of data cell **76** that was placed into the raw image data file during step **918**. In the preferred embodiment, the selected data cell **76** elements which data cell manager **95** incorporates into the compressed image data file typically may include image name **804**, image type **806**, image size **808**, user tags **810**, folder name **812**, time/date stamp **818**, IP parameters **826**, watermark data **824** and image-capture settings **828**.

Data cell manager **95** then deletes **936** unnecessary elements from data cell **76** in working memory **72** to conserve storage space within DRAM **60**. The deleted elements have become unnecessary since IPC **88** has already used them to successfully complete the processing and compression operations and since any other relevant elements have been stored in the compressed image file. In the preferred embodiment, the unnecessary data cell **76** elements deleted from data cell **76** in working memory **72** typically include IP parameters **826**, image size **808**, watermark data **824** and image-capture settings **828**. In alternate embodiments, the deleted data cell **76** elements may further include image status flags **814**, background processing stage **816**, time/date stamp **818**, delete request **820** and stop-processing request **822**.

Next, IPC **88** deletes **938** the raw image data file from flash disk **64**, including the copy of the data cell **76** which data cell manager **95** placed into the raw image data file during step **918**. Data cell manager then passes **940** the generated data cell **76** pointer to RAM spooler **2** (**90**) by placing the data cell **76** pointer in the RAM spooler **2** (**90**) input queue **78**(*e*) RAM spooler **2** (**90**) then copies **942** the compressed image data file to RAM disk **74** if IPC **88** was unable to store the compressed image data file to RAM disk **74** in **17** step **934** above.

Data cell manager then passes **944** the generated data cell **76** pointer to flash spooler **2** (**92**) by placing the data cell **76** pointer in the flash spooler **2** (**92**) input queue **78**(*f*). Flash spooler **2** (**92**) then copies **946** the compressed image data file to flash disk **64** and deletes **948** the compressed image data file from flash disk **64**.

FIGS. **9**A and **9**B illustrate the preferred operation of the present invention using a single captured image and corresponding data cell **76**. The present invention, however, typically operates to capture, process and store a series of captured images. Using multi-tasking and task-priority techniques, the present invention may effectively handle multiple captured images at various processing stages within camera **110**. Therefore, the process steps of FIGS. **9**A and **9**B may advantageously be repeated for each captured image in accordance with the present invention.

Referring now to FIG. **10**, a flowchart showing preferred method steps for using the present invention to recover from a disruptive event within camera **10** is shown. Disruptive events may comprise a variety of occurrences which endanger captured image data within camera **10**, including a power failure within camera **10** or removal of flash disk **64** while a captured image is being processed.

Following a particular disruptive event, a camera **10** user initially remedies the disrupting factor and then applies **1010** power to camera **10**. Data cell manager **95** then determines **1012** whether an image data file was stored in RAM disk **74** or flash disk **64** prior to the intervening disruptive event. In the event of a power failure within camera **10**, image data files on RAM disk **74** are protected through the use of backup batteries.

If no image data files were present in RAM disk **74** or flash disk **64** prior to the intervening disruptive event, then the FIG. **10** process ends. However, if image data files were present in RAM disk **74** or flash disk **64**, then data cell manager **95** determines **1014** whether the image data files contained raw or compressed image data. If the image data file contained compressed image data, then data cell manager **95** accesses and uses **1016** that compressed image data file to rebuild the data cell **76** in working memory **72**.

If, however, the image data file contained raw image data, then data cell manager **95** locates **1020** the copy of the data cell **76** stored within the raw image data file and then uses **1022** that raw image data cell **76** to rebuild the data cell **76** within working memory **72**. After data cell manager **95** rebuilds the current data cell **76** within working memory **72**, then data cell manager **95** determines **1018** whether another image file is present in RAM disk **74** or flash disk **64**. If another image file is present, then the FIG. **10** process returns to step **1014** to rebuild the data cell **76** which corresponds to the additional image file. After data cell manager **95** rebuilds all data cells **76** within working memory **72**, camera **110** may then resume **1024** normal background spooling processes **84** through **92** to process and store the captured image data.

The present invention has been described above with reference to certain preferred embodiments, however those skilled in the art will recognize that various modifications may be provided. Furthermore, while the present invention has been discussed above as applied to digital cameras, those skilled in the art will also recognize that the current apparatus and method may also be applied to various other devices. These and other variations upon the preferred embodiment are provided for by the present invention, which is limited only by the following claims.

What is claimed is:

1. A digital imaging system capable of correlating processing data and image data, said digital imaging system comprising:

a capturing device responsive to an image capture request for receiving image data for a first captured image and first processing data including settings of said capturing device at image capture time;

a manager device coupled to said capturing device for building a data cell containing said first processing data and for linking said data cell to said image data; and

a processing device coupled to said capturing device for processing said image data using said first processing data within said data cell, wherein said capturing device is operable for receiving image data for a second captured image using processing data that is different than said first processing data while said processing of said image data for said first captured image is being performed using said first processing data.

2. The digital imaging system of claim **1** wherein said manager device is operable for deleting a selected portion of said processing data from said data cell after said processing device has finished processing said image data.

3. The digital imaging system of claim **2** wherein said processing device is operable for storing said image data into a memory device after said manager device has deleted said selected portion of said processing data from said data cell.

4. The digital imaging system of claim **1** wherein said manager device is operable for making a copy of said data cell and for appending said copy of said data cell to said image data.

5. The digital imaging system of claim **4** wherein said manager device is operable for rebuilding said data cell after a disruptive event using said copy of said data cell appended to said image data.

6. The digital imaging system of claim **1** wherein said processing of said image data includes compressing said image data.

7. A method for correlating processing data and image data in a digital imaging system, said method comprising the steps of:

a) receiving image data for a first captured image and first processing data using a capturing device, wherein said first processing data includes settings of said capturing device at image capture time;

b) building a data cell with a manager device, wherein said data cell contains said first processing data;

c) linking said data cell to said image data;

d) receiving image data for a second captured image and second processing data that is different from said first processing data; and

e) processing said image data for said first captured image using said first processing data within said data cell can be while said capturing device is receiving said image data for said second captured image.

8. The method of claim **7** further comprising step f) of deleting a selected portion of said processing data from said data cell after said step e).

9. The method of claim **8** further comprising the step of storing said image data into a memory device after said step f).

10. The method of claim **7** further comprising the steps of:

making a copy of said data cell; and

appending said copy of said data cell to said image data.

11. The method of claim **10** further comprising the step of rebuilding said data cell after a disruptive event using said copy of said data cell appended to said image data.

12. The method of claim **7** wherein said step e) comprises the step of compressing said image data.

13. A computer-readable medium comprising program instructions for correlating processing data and image data in a digital imaging system, wherein said program instructions, when executed by a computer system coupled to said digital imaging system, cause said digital imaging system to implement the steps of:

a) receiving image data for a first captured image and first processing data using a capturing device, wherein said first processing data includes settings of said capturing device at image capture time;

b) building a data cell with a manager device, wherein said data cell contains said first processing data;

c) linking said data cell to said image data;

d) receiving image data for a second captured image and second processing data that is different from said first processing data; and

e) processing said image data for said first captured image using said first processing data within said data cell while said capturing device is receiving said image data for said second captured image.

14. The computer-readable medium of claim **13** wherein said program instructions, when executed, cause said digital imaging system to implement step f) of deleting a selected portion of said processing data from said data cell after said step e).

15. The computer-readable medium of claim **14** wherein said program instructions, when executed, cause said digital imaging system to implement the step of storing said image data into a memory device after said step f).

16. The computer-readable medium of claim **13** wherein said program instructions, when executed, cause said digital imaging system to implement the steps of:

making a copy of said data cell; and

appending said copy of said data cell to said image data.

17. The computer-readable medium of claim **16** wherein said program instructions, when executed, cause said digital imaging system to implement the step of rebuilding said data cell after a disruptive event using said copy of said data cell appended to said image data.

18. The computer-readable medium of claim **13** wherein said step e) comprises the step of compressing said image data.

* * * * *

EXHIBIT 3

US006222538B1

(12) **United States Patent**
Anderson

(10) **Patent No.: US 6,222,538 B1**
(45) **Date of Patent: *Apr. 24, 2001**

(54) **DIRECTING IMAGE CAPTURE SEQUENCES IN A DIGITAL IMAGING DEVICE USING SCRIPTS**

(75) Inventor: **Eric C. Anderson**, San Jose, CA (US)

(73) Assignee: **FlashPoint Technology, Inc.**, San Jose, CA (US)

(*) Notice: This patent issued on a continued prosecution application filed under 37 CFR 1.53(d), and is subject to the twenty year patent term provisions of 35 U.S.C. 154(a)(2).

Subject to any disclaimer, the term of this patent is extended or adjusted under 35 U.S.C. 154(b) by 0 days.

(21) Appl. No.: **09/032,659**

(22) Filed: **Feb. 27, 1998**

(51) **Int. Cl.**[7] **G06F 63/00**; G03B 19/02; G03B 13/02

(52) **U.S. Cl.** **345/336**; 345/326; 396/287

(58) **Field of Search** 396/287; 345/336, 345/326, 302

(56) **References Cited**

U.S. PATENT DOCUMENTS

4,519,692	*	5/1985	Michalik	396/48
4,540,276	*	9/1985	Ost	355/38
4,916,435	*	4/1990	Fuller	340/573.4
5,189,490	*	2/1993	Shetty et al.	356/371
5,198,851	*	3/1993	Ogawa	396/211
5,220,614	*	6/1993	Crain	382/136
5,231,651	*	7/1993	Ozaki et al.	378/4
5,343,386	*	8/1994	Barber .	
5,343,509	*	8/1994	Dounies	379/40
5,432,871	*	7/1995	Novik	382/232
5,473,370	*	12/1995	Moronaga et al.	348/231
5,477,264	*	12/1995	Sarbadhikari et al.	348/231
5,587,740	*	12/1996	Brennan	348/373
5,589,902	*	12/1996	Gruel et al.	396/3
5,644,694	*	7/1997	Appleton	345/474
5,764,276	*	6/1998	Martin et al.	348/13
5,797,051	*	8/1998	McIntyre et al.	396/319
5,949,474	*	9/1999	Gerzberg et al.	348/14

FOREIGN PATENT DOCUMENTS

0568468 A2	*	11/1993	(EP)	H04N/1/00
0661658 A2	*	7/1995	(EP)	G06F/19/00
664526 A2	*	7/1995	(EP)	G06T/17/40
664527 A1	*	7/1995	(EP)	G06T/17/40
0729271 A2	*	8/1996	(EP)	H04N/5/262
0817476 A2	*	1/1998	(EP)	H04N/5/225
9-171213	*	6/1997	(JP)	G03B/17/24

OTHER PUBLICATIONS

Grimm, Leigh. "The Manipulation Proclamation", Photo Trade News, p. 66 (reprinted as pp. 1–5), Feb. 1997.*
Anonymous, "Digitella Technology Solutions Announces ScriptGenerator 1.0, Enabling Users to Easily Develop Software Scripts that Run on Digital Cameras", PR Newswire (published electronically), 447 words (reprinted as pp. 1–2), Oct. 1998.*

* cited by examiner

Primary Examiner—Mark R. Powell
Assistant Examiner—Jeffrey Allen Rossi
(74) *Attorney, Agent, or Firm*—Sawyer Law Group LLP

(57) **ABSTRACT**

A method and system for controlling user interaction in a digital imaging device that includes a display screen. The method and system include providing the digital imaging device with a directed image capture sequence that comprises a set of program instructions, which when executed, display interactive instructions on the display screen that prompt the user to perform specific operations. In response to the user performing those operations, the interactive instructions are automatically updated to thereby guide the user through a series of related image captures. The directed image capture sequence is preferable written in an interpreted scripting language and loaded into the camera from an external source to add functionality to the digital imaging device.

15 Claims, 11 Drawing Sheets

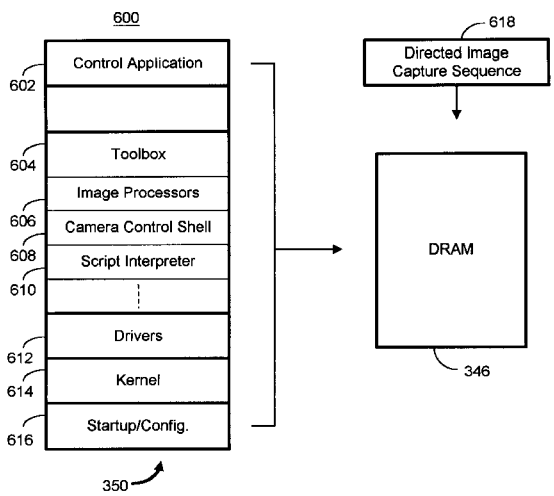

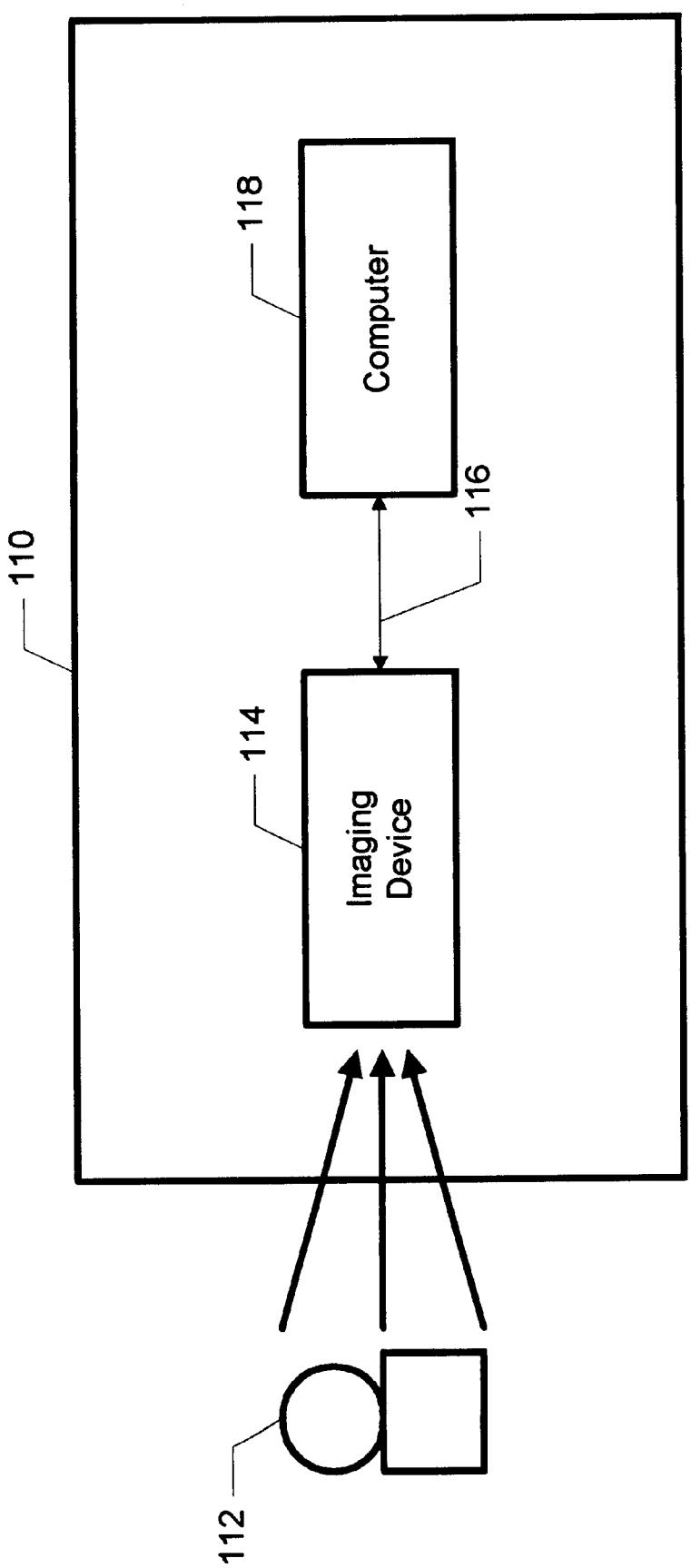

FIG. 1

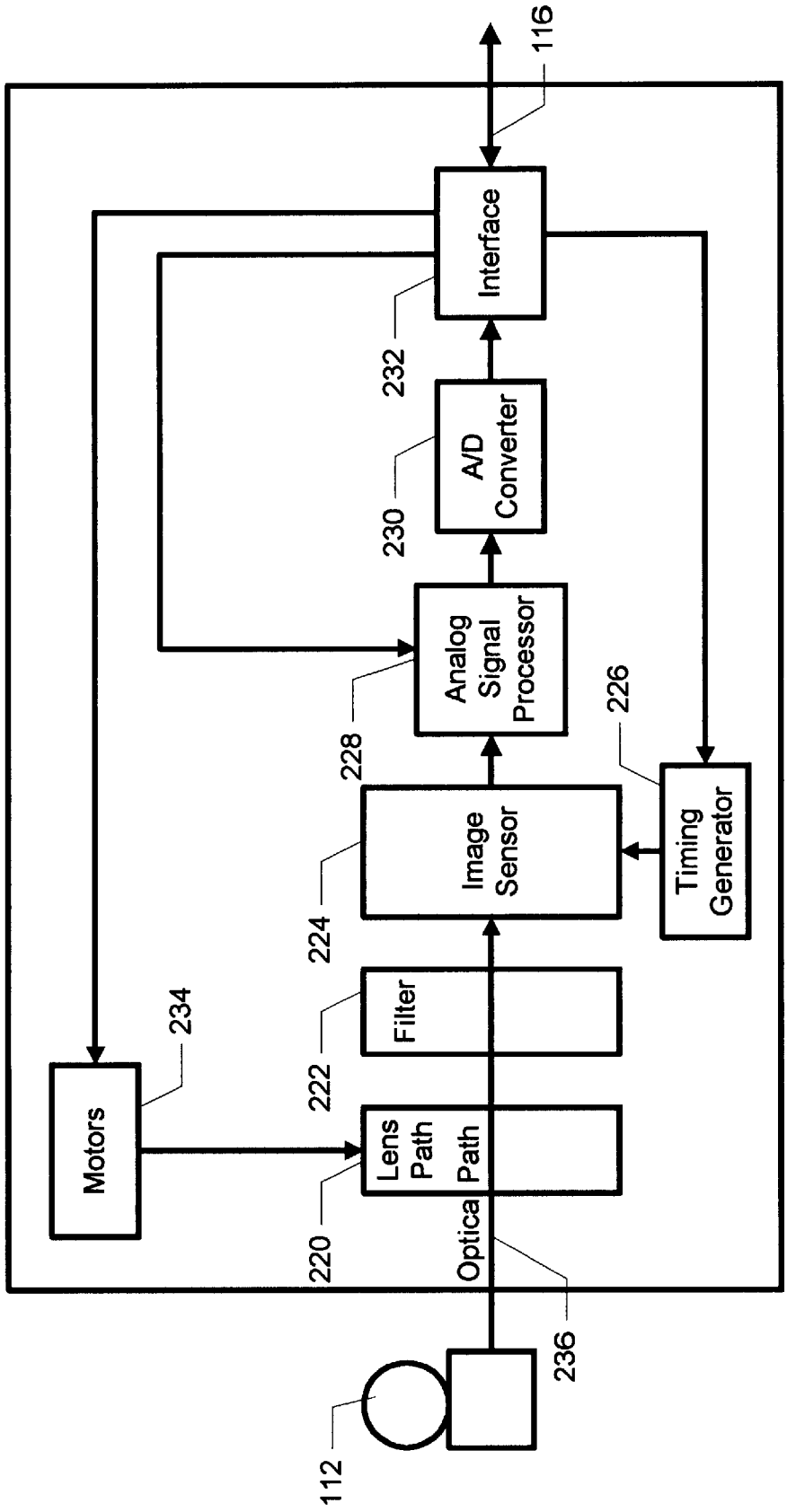
116
Interface
232
A/D Converter
230
Analog Signal Processor
228
226
Image Sensor
Timing Generator
224
Filter
222
234
Motors
Lens Path
Optical Path
220
236
112

FIG. 2

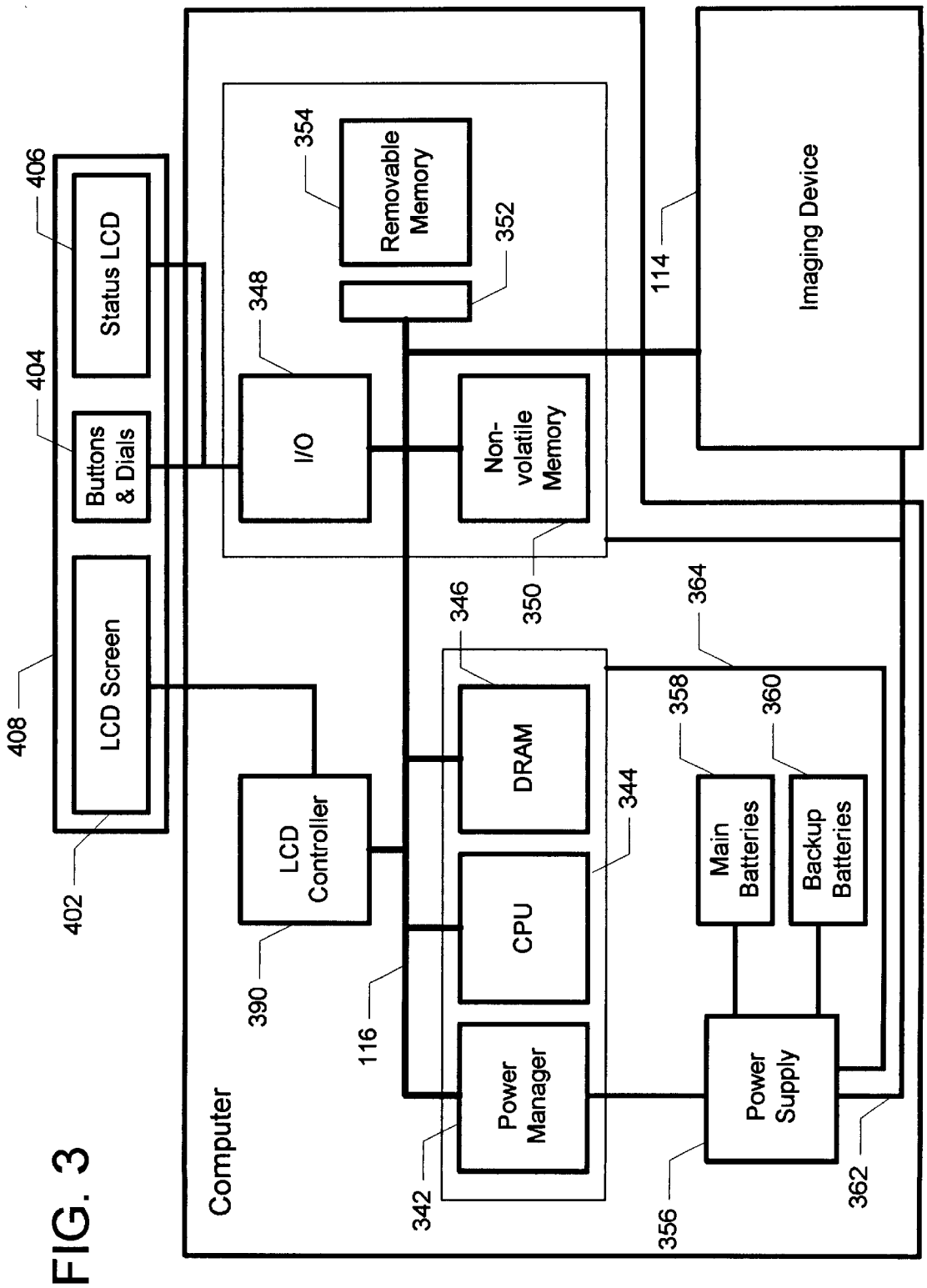
406
Status LCD
404
Buttons & Dials
408
LCD Screen
402
354
Removable Memory
352
348
I/O
Non-volatile Memory
350
114
Imaging Device
346
364
358
360
DRAM
344
LCD Controller
390
CPU
116
Main Batteries
Backup Batteries
Power Manager
342
Power Supply
356
362
Computer

FIG. 3

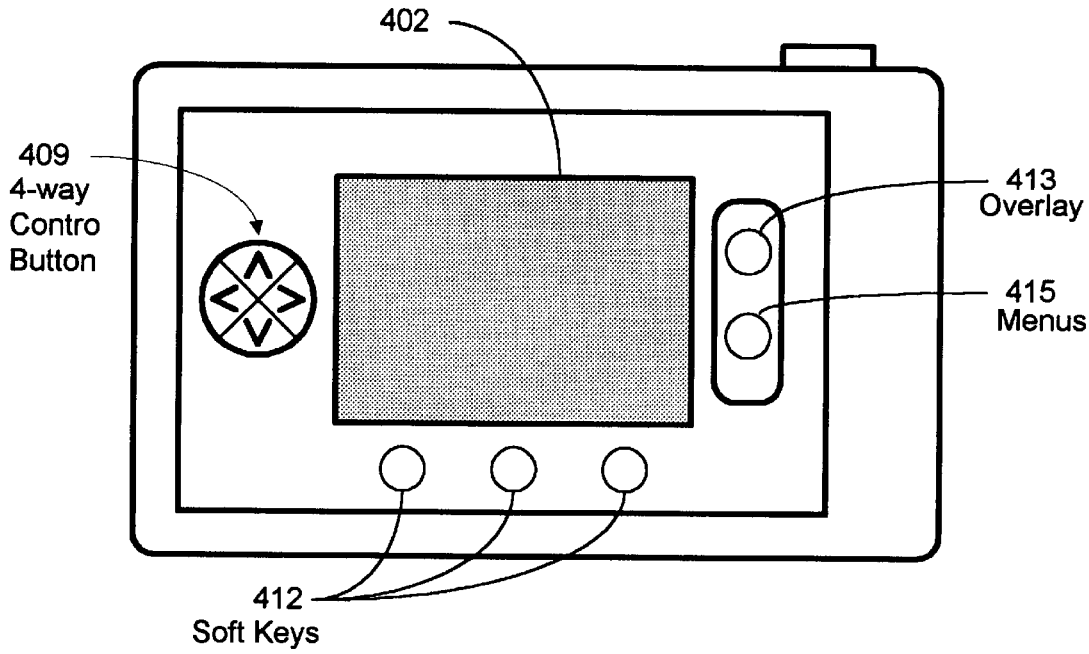
402
409
4-way
Contro
Button
413
Overlay
415
Menus
412
Soft Keys

FIG. 4

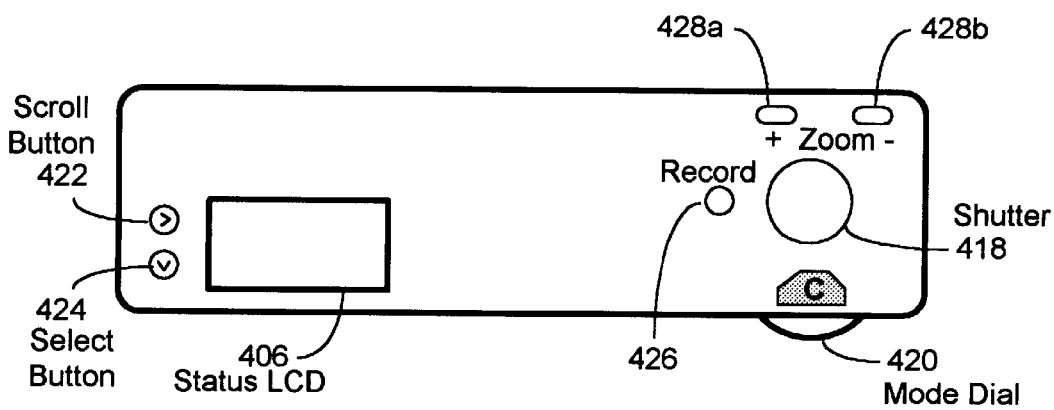
428a
428b
Scroll
Button
422
+ Zoom -
Record
Shutter
418
424
Select
Button
406
Status LCD
426
420
Mode Dial

FIG. 5

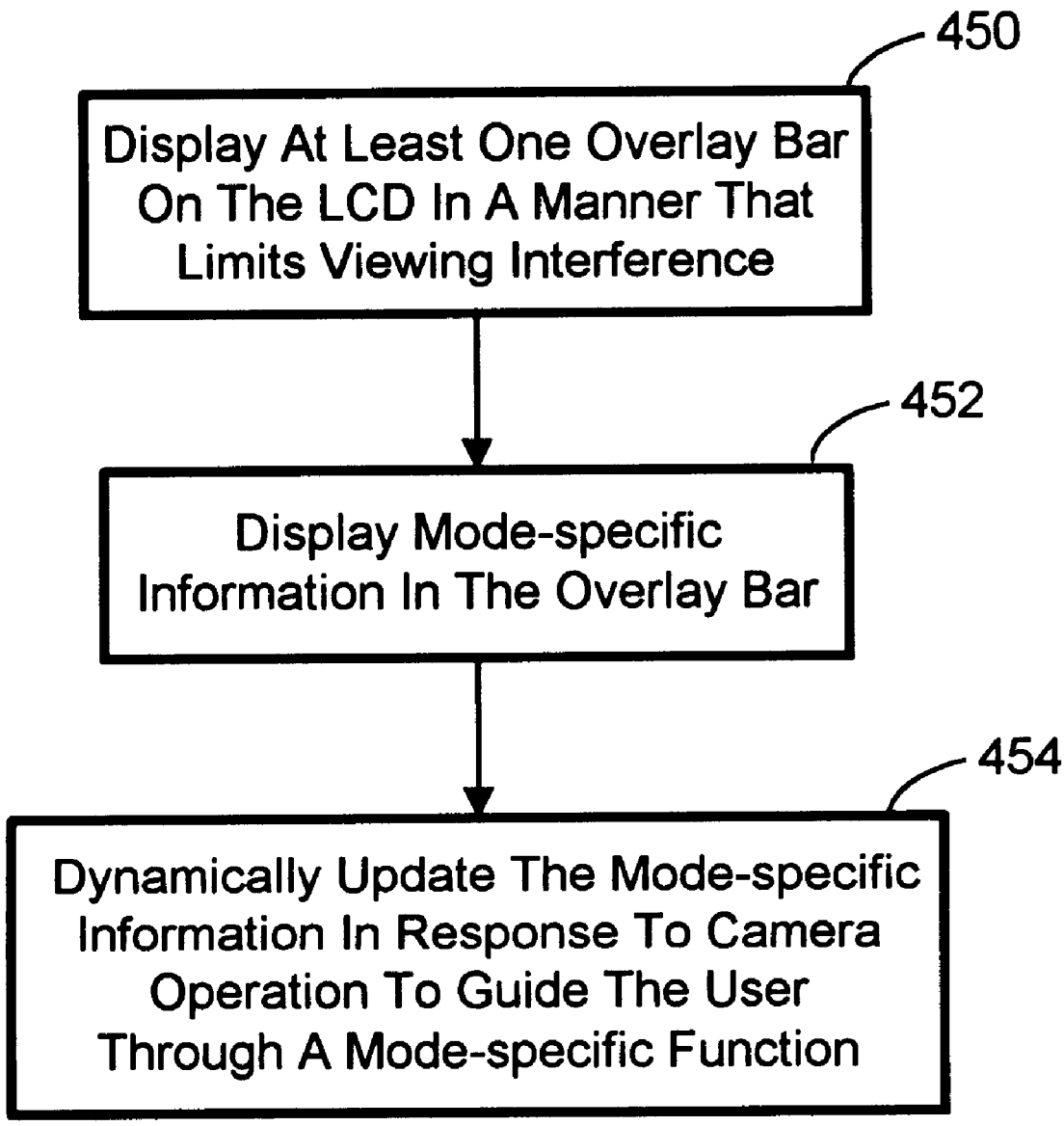
450
Display At Least One Overlay Bar On The LCD In A Manner That Limits Viewing Interference
452
Display Mode-specific Information In The Overlay Bar
454
Dynamically Update The Mode-specific Information In Response To Camera Operation To Guide The User Through A Mode-specific Function

FIG. 6

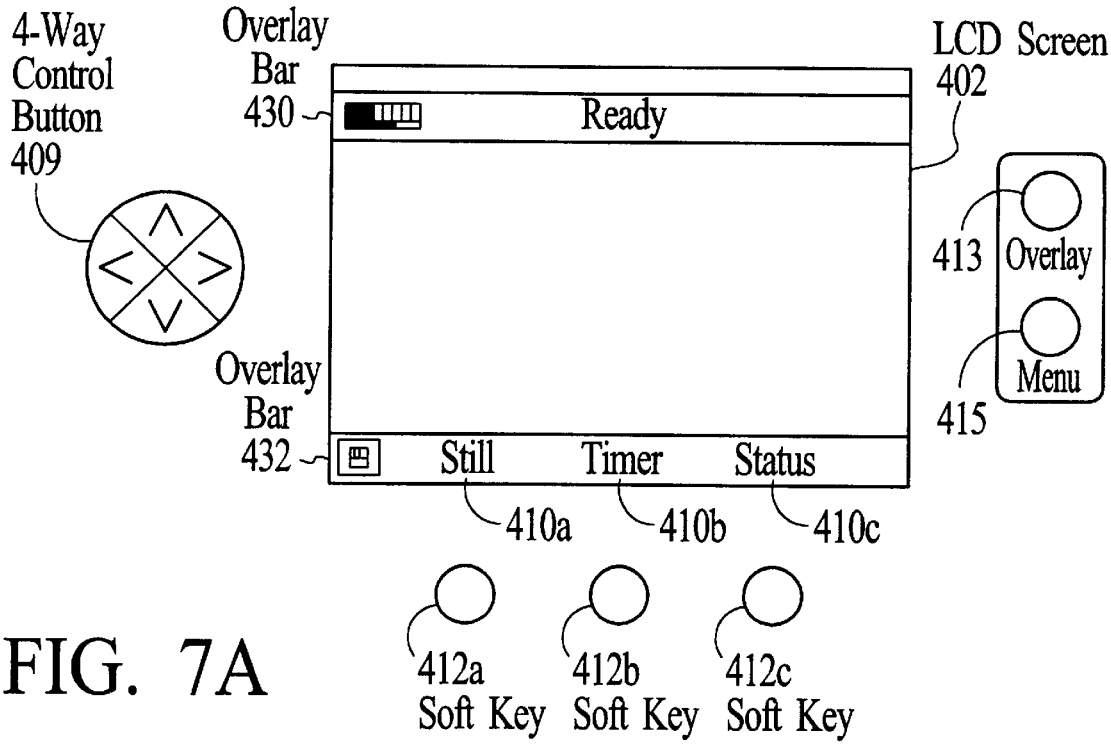
4-Way
Control
Button
409
Overlay
Bar
430
Ready
LCD Screen
402
413
Overlay
Menu
415
Overlay
Bar
432
Still
Timer
Status
410a
410b
410c
412a
Soft Key
412b
Soft Key
412c
Soft Key

FIG. 7A

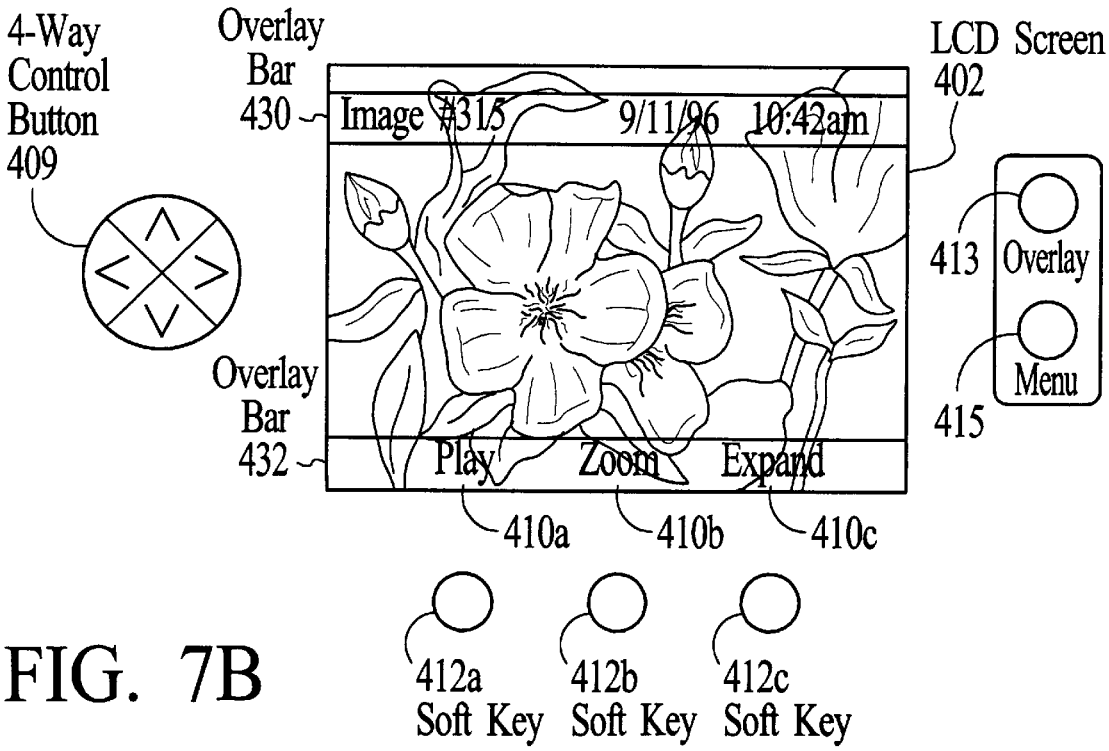
4-Way
Control
Button
409
Overlay
Bar
430
Image #315
9/11/96
10:42am
LCD Screen
402
413
Overlay
Menu
415
Overlay
Bar
432
Play
Zoom
Expand
410a
410b
410c
412a
Soft Key
412b
Soft Key
412c
Soft Key

FIG. 7B

FIG. 8A

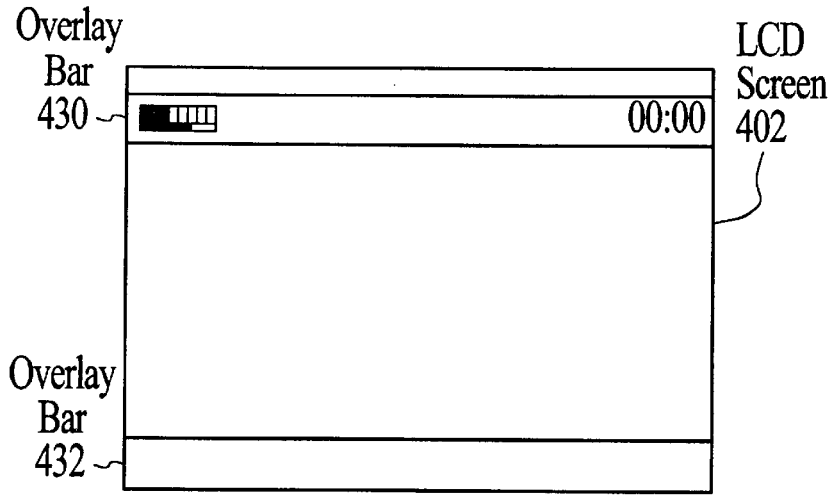

FIG. 8B

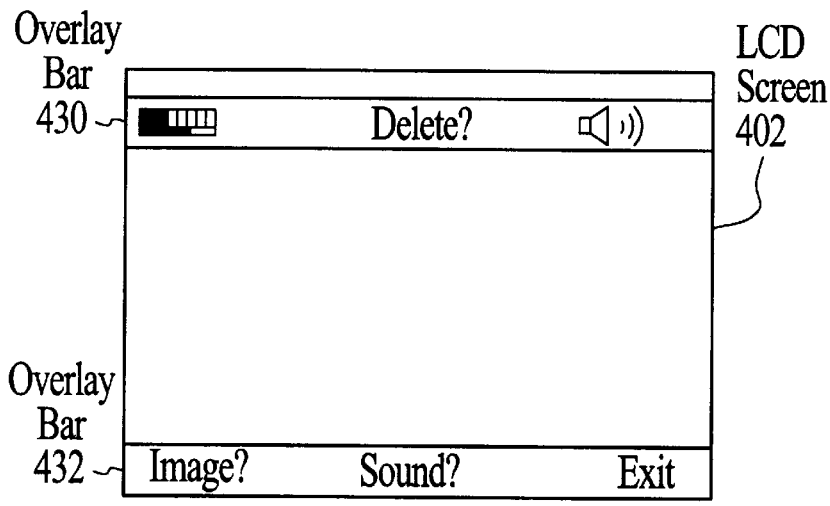

FIG. 8C

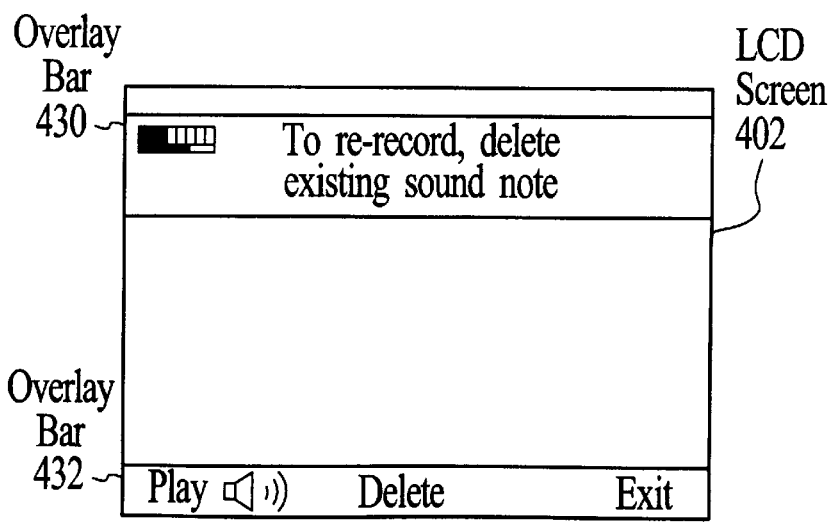

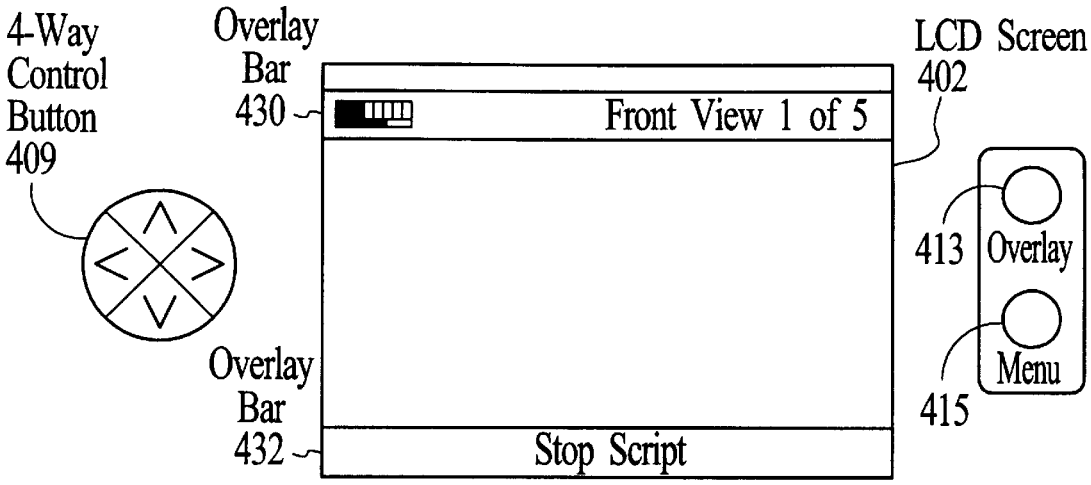
4-Way
Control
Button
409
Overlay
Bar
430
Front View 1 of 5
LCD Screen
402
413
Overlay
Menu
415
Overlay
Bar
432
Stop Script

FIG. 9A

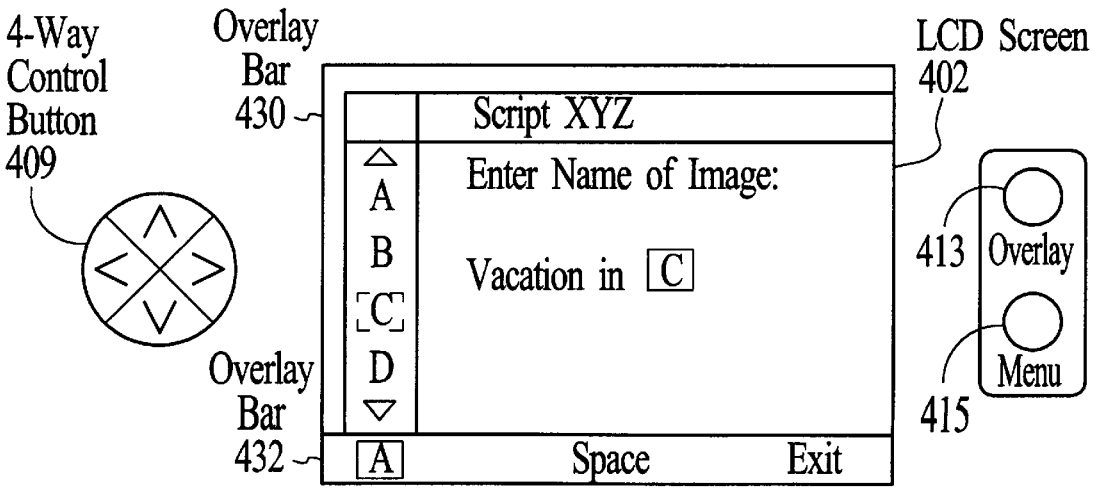
4-Way
Control
Button
409
Overlay
Bar
430
Script XYZ
A
B
C
D
Enter Name of Image:
Vacation in C
LCD Screen
402
413
Overlay
Menu
415
Overlay
Bar
432
A
Space
Exit

FIG. 9B

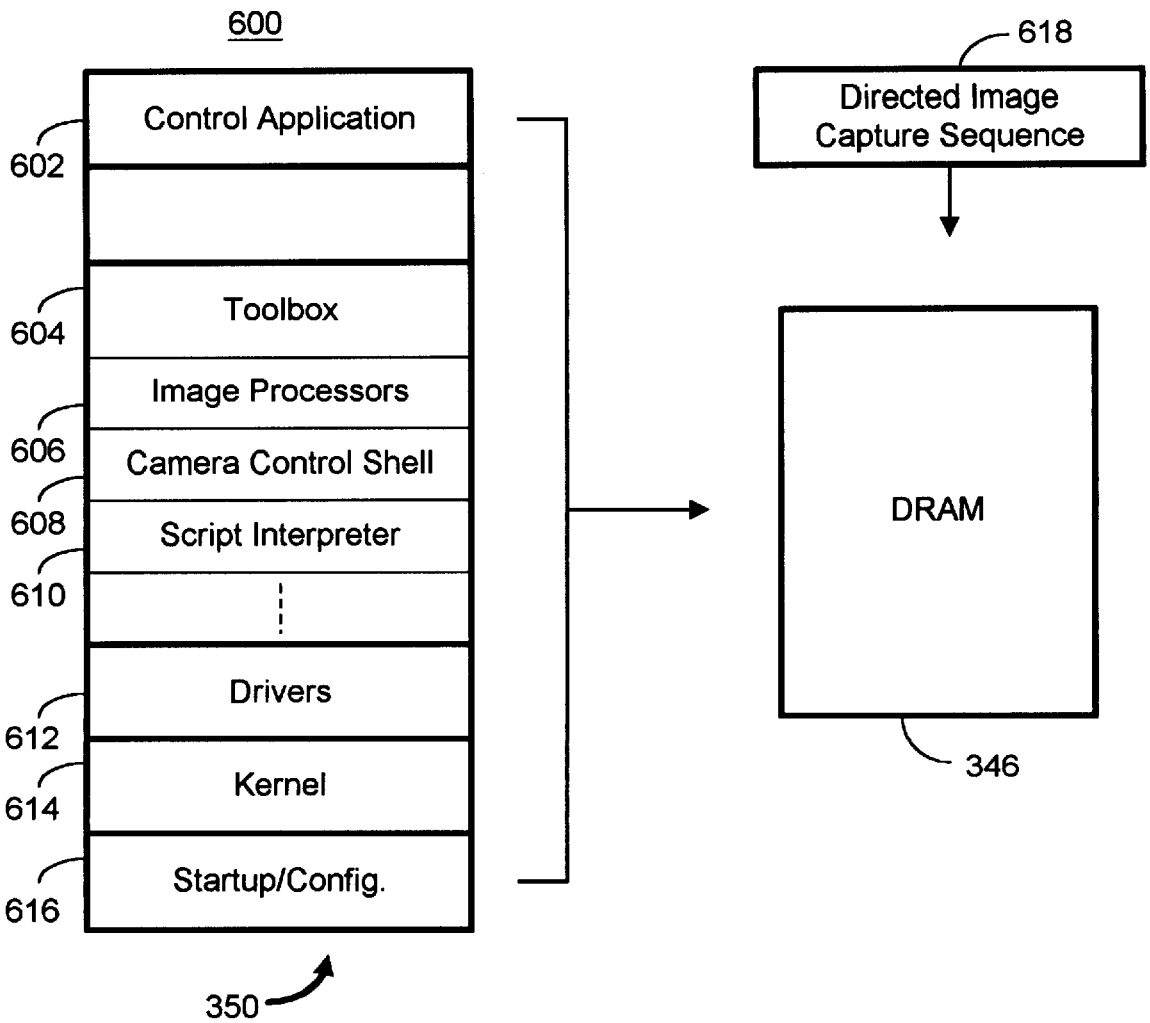
600
Control Application
602
Toolbox
604
Image Processors
606
Camera Control Shell
608
Script Interpreter
610
Drivers
612
Kernel
614
Startup/Config.
616
350
618
Directed Image Capture Sequence
DRAM
346

FIG. 10

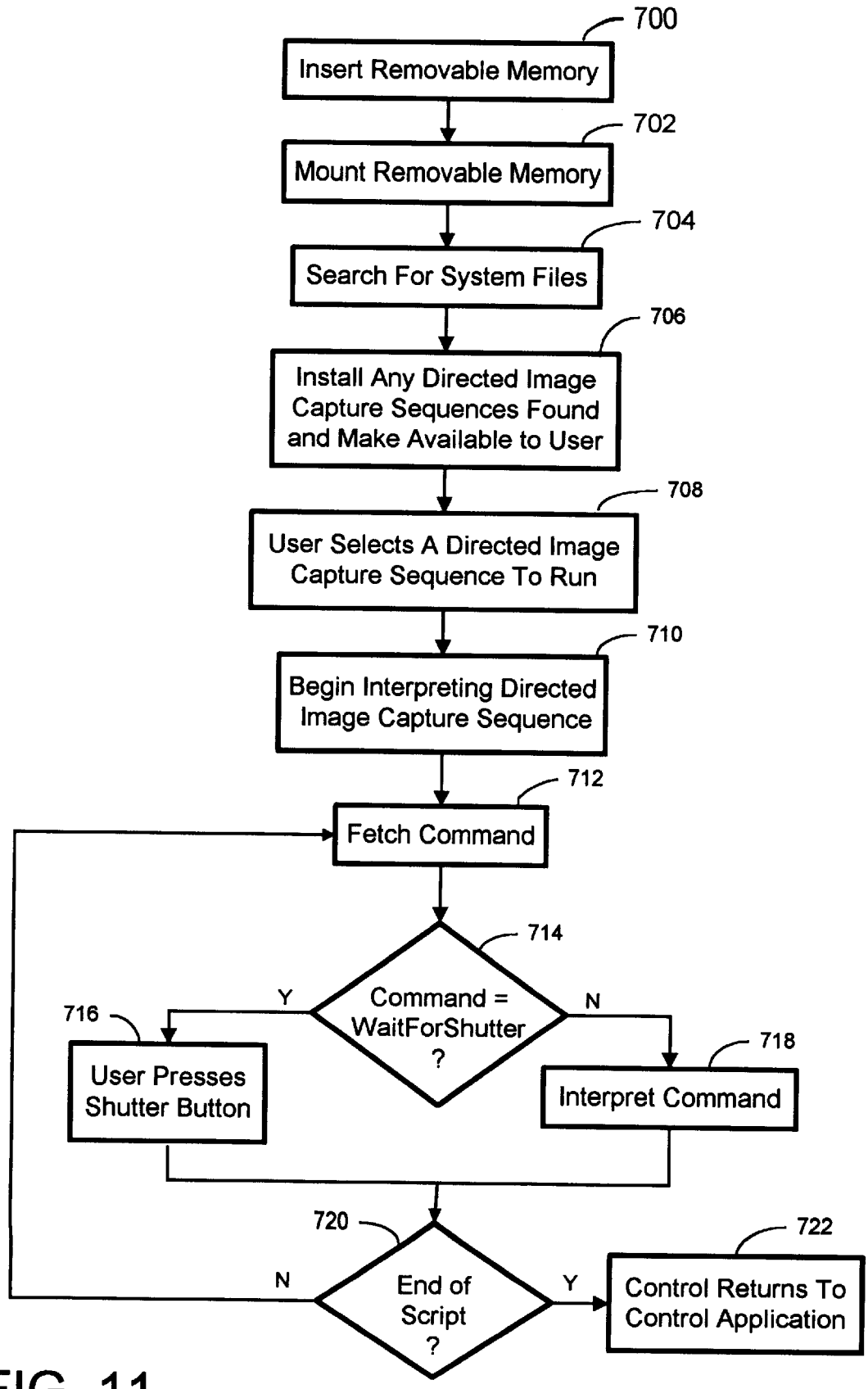
700
Insert Removable Memory
702
Mount Removable Memory
704
Search For System Files
706
Install Any Directed Image Capture Sequences Found and Make Available to User
708
User Selects A Directed Image Capture Sequence To Run
710
Begin Interpreting Directed Image Capture Sequence
712
Fetch Command
714
Command = WaitForShutter ?
Y
N
716
User Presses Shutter Button
718
Interpret Command
720
End of Script ?
N
Y
722
Control Returns To Control Application

FIG. 11

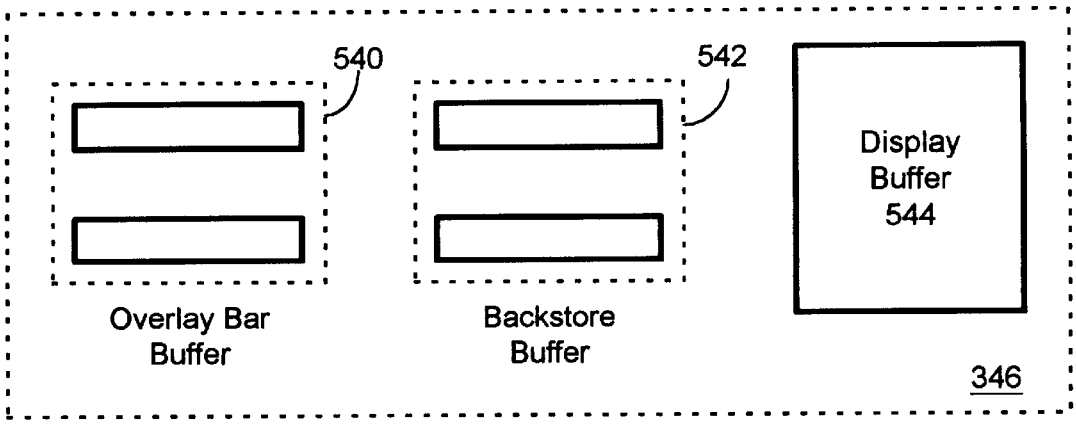

FIG. 12A

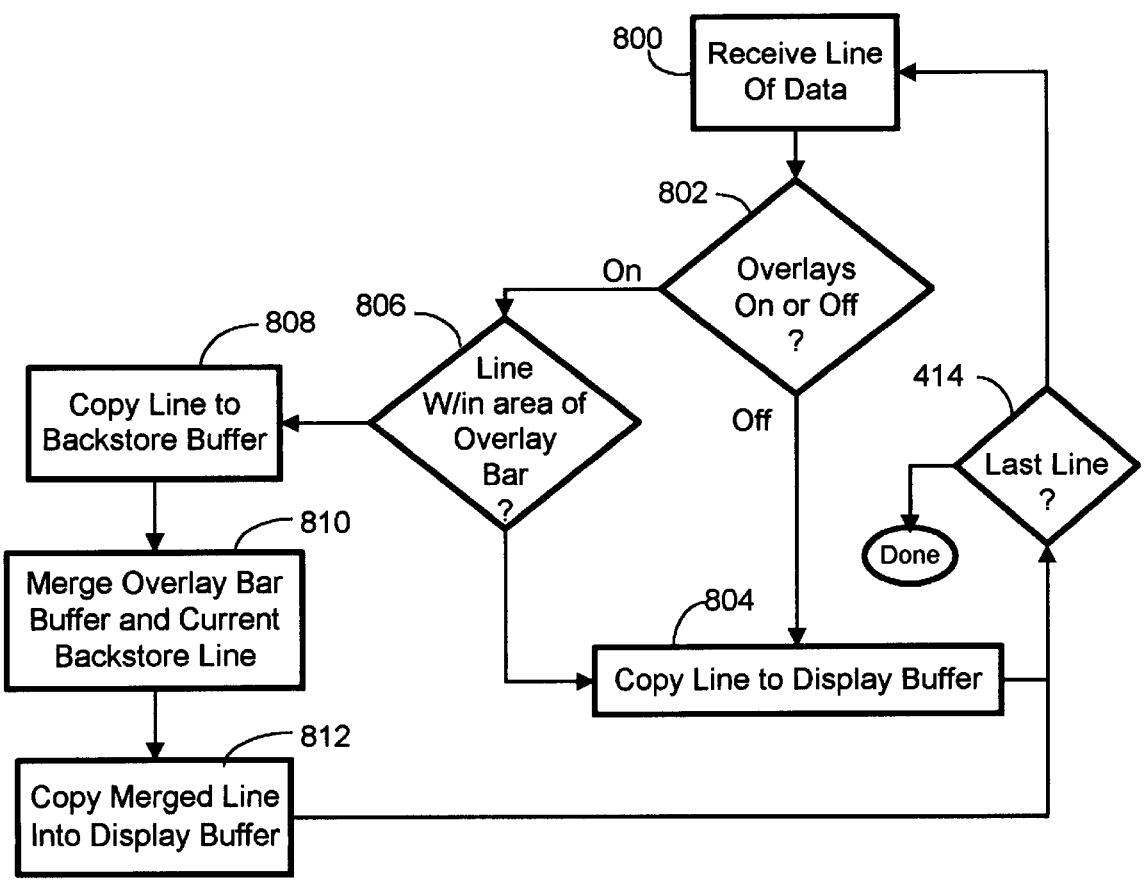

FIG. 12B

DIRECTING IMAGE CAPTURE SEQUENCES IN A DIGITAL IMAGING DEVICE USING SCRIPTS

CROSS-REFERENCE TO RELATED APPLICATIONS

This application is related to U.S. patent application Ser. No. 09/032,172, entitled "A Method And System For Controlling User Interaction In A Digital Imaging Device Using Dynamic Overlay Bars", and U.S. patent application Ser. No. 09/032,177, entitled "Method and System For Displaying Overlay Bars In A Digital Imaging Device", which were filed on the same date as the present application.

FIELD OF THE INVENTION

The present invention relates generally to digital imaging devices, including digital cameras, and more particularly to a method and system for controlling user interaction in a digital imaging device using dynamic overlay bars.

BACKGROUND OF THE INVENTION

Most digital cameras today are similar in size to and behave like conventional point-and-shoot cameras. Unlike conventional cameras, however, most digital cameras store digital images in an internal flash memory or on external memory cards, and some are equipped with a liquid-crystal display (LCD) screen on the back of the camera. Through the use of the LCD, most digital cameras operate in two modes, record and play, although some only have a record mode.

In record mode, which is also referred to as capture mode, the LCD acts as a live viewfinder in which the user may view an object or scene before taking a picture, similar to the LCD on a camcorder. When the user presses the shutter button, whatever scene is shown on the LCD is captured as a still image. Besides capturing still images, some digital cameras can be set to capture other image types, such as burst and time-lapse images. A burst image is a series of still images captured in rapid succession, while a time-lapse image is series of still images taken at regular intervals over a longer time period.

In play mode, the LCD acts as a playback screen for reviewing the previously captured images. Typically, several small images are displayed on the LCD at once, and by selecting one of the images the user may then display the full-sized version of the images in the LCD.

Although conventional digital cameras are more convenient for the user to use than film cameras due to instant play back of captured images, there are several drawbacks in the user interface that restrict user interaction with the camera. When capturing images, for example, it is often helpful for the user to be informed about the current settings or operational state of the camera, such as whether the flash is on/off, and the current image type setting, for instance.

In conventional digital cameras, such status information is typically displayed as text blocks or accessed through a status screen or the like. The disadvantage with the text blocks is that they are typically small (10–15 characters in length), and therefore, the amount of status information they can provide is very limited. Typically, text blocks are used to display information such as the current image number. Moreover, when text blocks are displayed with a solid color background, the background obscures that portion of the image. And when text blocks are displayed with no background (only text), the text is difficult to distinguish from the colors comprising the image, making the text hard to read.

The disadvantage with status screens is that in order to view the status information, the image currently displayed on the LCD must be replaced with the status screen, causing the user to loose sight of the image. Another approach would be to shrink the display area of the LCD and add a black status area in the viewfinder, as done in optical viewfinders of film cameras. This, however, would shrink the size of images displayed in the viewfinder.

Another drawback with conventional digital cameras is that as technological advances are made, digital cameras are continually provided with more features and functions, which make them more complex for the user to interact with. This is similar to what occurs with PC software, which increasingly grows larger and harder to use. PC developers attempt to alleviate this problem by providing more and larger help menus. Each help menu usually opens in its own window with paragraphs of scrolling text.

Using PC help menus in a digital camera to guide user interaction through the camera features and functions would be less than ideal because of the limited size of the camera LCD. And assuming help menus were displayed, they would either obscure whatever image was being displayed or otherwise totally replace it, which is disadvantageous to the picture taker.

Accordingly, what is needed is an improved system and method for displaying status information in a manner that does not obscure the display of the current object in the LCD, and for controlling user interaction in a digital imaging device. The present invention addresses such a need.

SUMMARY OF THE INVENTION

The present invention provides a method and system for controlling user interaction in a digital imaging device having a display using dynamic overlay bars. The digital imaging device includes at least two operating modes, where each of the operating modes has at least one mode-specific operation that can be performed on images. In response to operating in either of the operating modes, the digital imaging device displays a translucent overlay bar on the display that is dynamically updated with status information and interactive instructions that guide the user through the mode-specific operations.

In a second aspect of the present invention, the interactive instructions are implemented using a script, which is a text-based program that may be easily written by the user and externally loaded into the camera. Once loaded into the camera, the commands comprising the script are translated and executed one-by-one by a script interpreter to guide the user through the newly provided function.

A third aspect of the present invention, provides a method and system for displaying overlay bars on the display. First, text and graphic information to be displayed on the overlay bars are stored in an overlay bar buffer, and then displayed on the display. Thereafter, the current image is displayed on the display line-by-line. The lines of the image that will be displayed within the area of an overlay bar are stored in a backstore buffer. Each line in the backstore buffer is merged with its corresponding lines in the overlay bar buffer and displayed. This aspect of the present invention makes the overlay bars appear translucent, and the image appear as though it is sliding beneath the overlay bars as it is being displayed. When the user turns-off the overlay bars, only the portions of the image stored in the backstore buffer need be re-displayed to provide the original image, thus eliminating the need to re-display the entire image.

Accordingly, the method and system of the present invention provides status information to a user and allows the user

to perform complex camera functions and features to the images with minimum effort, while allowing for easy viewing of the images. Displaying interactive instructions on dynamic overlay bars to guide the user through complex tasks in accordance with the present invention eliminates the need for help screens and for the user to remember complicated key sequences, and increases the ease of use and operation of the digital camera. The manner in which the overlay bars and the image is displayed makes the user interface more aesthetically pleasing, while increasing the display speed of the digital imaging device.

BRIEF DESCRIPTION OF THE DRAWINGS

FIG. **1** is a block diagram of a digital camera that operates in accordance with the present invention.

FIG. **2** is a block diagram of an example embodiment for the imaging device of FIG. **1**.

FIG. **3** is a block diagram of an example embodiment for the computer of FIG. **1**.

FIGS. **4** and **5** are diagrams depicting the preferred embodiment of the camera's **110** user interface.

FIG. **6** is a flow chart is shown illustrating the process of controlling user interaction in a digital imaging device using dynamic overlay bars in accordance with the present invention

FIGS. **7**A and **7**B are diagrams illustrating the use of dynamic overlay bars on the LCD screen during capture and play modes, respectively.

FIGS. **8**A through **8**C are diagrams illustrating how the overlay bars may be used to guide the user through a recording of a sound annotation.

FIGS. **9**A and **9**B are diagrams illustrating example directed image capture screens.

FIG. **10** is a block diagram illustrating the camera software, which is stored in ROM, and DRAM, where the software is executed.

FIG. **11** is a flow chart illustrating an exemplary process of installing and running a script-based directed image capture in a preferred embodiment of the present invention.

FIG. **12**A is a diagram illustrating a memory buffer organization for displaying overlay bars.

FIG. **12**B is a flow chart illustrating the process of displaying overlay bars on the LCD in accordance with the present invention.

DETAILED DESCRIPTION OF THE INVENTION

The present invention relates to an improved method and system for controlling user interaction in a digital imaging device using dynamic overlay bars. The following description is presented to enable one of ordinary skill in the art to make and use the invention and is provided in the context of a patent application and its requirements. Although the present invention will be described in the context of a digital camera, various modifications to the preferred embodiment will be readily apparent to those skilled in the art and the generic principles herein may be applied to other embodiments. That is, any digital imaging device which displays images, icons and/or other items, could incorporate the features described herein below and that device would be within the spirit and scope of the present invention. Thus, the present invention is not intended to be limited to the embodiment shown but is to be accorded the widest scope consistent with the principles and features described herein.

The present invention is a method and system for controlling user interaction in a digital imaging device using dynamic overlay bars. According to the present invention, both status information and interactive instructions are displayed on dynamic overlay bars to enable a user to perform complex camera functions and apply features to the images with minimum effort, while allowing for easy viewing of the images.

Referring now to FIG. **1**, a block diagram of a digital camera **110** is shown for use in accordance with the present invention. Camera **110** preferably comprises an imaging device **114**, a system bus **116** and a computer **118**. Imaging device **114** is optically coupled to an object **112** and electrically coupled via system bus **116** to computer **118**. Once a photographer has focused imaging device **114** on object **112** and, using a capture button or some other means, instructed camera **110** to capture an image of object **112**, computer **118** commands imaging device **114** via system bus **116** to capture raw image data representing object **112**. The captured raw image data is transferred over system bus **116** to computer **118** which performs various image processing functions on the image data before storing it in its internal memory. System bus **116** also passes various status and control signals between imaging device **114** and computer **118**.

Referring now to FIG. **2**, a block diagram of an example embodiment of imaging device **114** is shown. Imaging device **114** typically comprises a lens **220** having an iris, a filter **222**, an image sensor **224**, a timing generator **226**, an analog signal processor (ASP) **228**, an analog-to-digital (A/D) converter **230**, an interface **232**, and one or more motors **234**.

In operation, imaging device **114** captures an image of object **112** via reflected light impacting image sensor **224** along optical path **236**. Image sensor **224**, which is typically a charged coupled device (CCD), responsively generates a set of raw image data in CCD format representing the captured image **112**. The raw image data is then routed through ASP **228**, A/D converter **230** and interface **232**. Interface **232** has outputs for controlling ASP **228**, motors **234** and timing generator **226**. From interface **232**, the raw image data passes over system bus **116** to computer **118**.

Referring now to FIG. **3**, a block diagram of an example embodiment for computer **118** is shown. System bus **116** provides connection paths between imaging device **114**, an optional power manager **342**, central processing unit (CPU) **344**, dynamic random-access memory (DRAM) **346**, input/output interface (I/O) **348**, non-volatile memory **350**, and buffers/connector **352**. Removable memory **354** connects to system bus **116** via buffers/connector **352**. Alternately, camera **110** may be implemented without removable memory **354** or buffers/connector **352**.

Power manager **342** communicates via line **366** with power supply **356** and coordinates power management operations for camera **110**. CPU **344** typically includes a conventional processor device for controlling the operation of camera **110**. In the preferred embodiment, CPU **344** is capable of concurrently running multiple software routines to control the various processes of camera **110** within a multithreaded environment. DRAM **346** is a contiguous block of dynamic memory which may be selectively allocated to various storage functions. LCD controller **390** accesses DRAM **346** and transfers processed image data to LCD screen **402** for display.

I/O **348** is an interface device allowing communications to and from computer **118**. For example, I/O **348** permits an

external host computer (not shown) to connect to and communicate with computer **118**. I/O **348** also interfaces with a plurality of buttons and/or dials **404**, and an optional status LCD **406**, which in addition to the LCD screen **402**, are the hardware elements of the camera's user interface **408**.

Non-volatile memory **350**, which may typically comprise a conventional read-only memory or flash memory, stores a set of computer-readable program instructions to control the operation of camera **110**. Removable memory **354** serves as an additional image data storage area and is preferably a non-volatile device, readily removable and replaceable by a camera **110** user via buffers/connector **352**. Thus, a user who possesses several removable memories **354** may replace a full removable memory **354** with an empty removable memory **354** to effectively expand the picture-taking capacity of camera **110**. In the preferred embodiment of the present invention, removable memory **354** is typically implemented using a flash disk.

Power supply **356** supplies operating power to the various components of camera **110**. In the preferred embodiment, power supply **356** provides operating power to a main power bus **362** and also to a secondary power bus **364**. The main power bus **362** provides power to imaging device **114**, I/O **348**, non-volatile memory **350** and removable memory **354**. The secondary power bus **364** provides power to power manager **342**, CPU **344** and DRAM **346**.

Power supply **356** is connected to main batteries **358** and also to backup batteries **360**. In the preferred embodiment, a camera **110** user may also connect power supply **356** to an external power source. During normal operation of power supply **356**, the main batteries **358** provide operating power to power supply **356** which then provides the operating power to camera **110** via both main power bus **362** and secondary power bus **364**. During a power failure mode in which the main batteries **358** have failed (when their output voltage has fallen below a minimum operational voltage level) the backup batteries **360** provide operating power to power supply **356** which then provides the operating power only to the secondary power bus **364** of camera **110**.

FIGS. **4** and **5** are diagrams depicting the preferred hardware components of the camera's **110** user interface **408**. FIG. **4** is back view of the camera **110** showing the LCD screen **402**, a four-way navigation control button **409**, an overlay button **413**, a menu button **414**, and a set of programmable soft keys **416**. FIG. **5** is a top view of the camera **110** showing a shutter button **418**, and a mode dial **420**. The camera may optionally include status LCD **406**, status LCD scroll and select buttons **422** and **424**, a sound record button **426**, and zoom-in, zoom-out buttons **428***a* and **428***b*.

The digital camera of the present invention is controlled by graphical-user-interface (GUI) based operating system (OS), which is in contrast to conventional digital cameras that are controlled by proprietary hardware architectures. In the preferred embodiment of the present invention, the OS provides the digital camera with several different operating modes for supporting various camera functions. Although the digital camera may include several different operating modes, the modes relevant to this description are capture mode, and play mode.

In capture mode, the camera **100** supports the actions of preparing to capture an image, and capturing an image through the use of either the LCD screen **402** or the status LCD **406**. In play mode, the camera **110** supports the actions of displaying full-sized views of captured images, and play-backing various media types associated with the images, such as sound. The user may switch between the various modes, using the mode dial **420**. When the camera is placed into a particular mode, that mode's default screen appears in the LCD screen **402** in which a set of mode-specific items, such as images, icons, and text, are displayed.

The present invention provides a method and system for controlling user interaction in a digital imaging device using dynamic overlay bars. According to the present invention, the dynamic overlay bars are used to provide the user with both status information and interactive instructions. The interactive instructions are automatically updated in response to normal camera operations to guide the user through predefined operations of the camera, thus making the device extremely easy to use. In addition, the manner in which the dynamic overlay bars are displayed reduces viewing interference with the currently displayed object.

Referring now to FIG. **6**, a flow chart is shown illustrating the process of controlling user interaction in a digital imaging device using dynamic overlay bars in accordance with the present invention. The process begins by displaying an image on the LCD screen **402** along with at least one overlay bar that provides a dynamic prompt area in a way that minimizes viewing interference with the displayed image in step **450**.

In a preferred embodiment, viewing interference is minimized by positioning the overlay bar along an edge of the LCD screen **402** and by displaying the background of the bar translucently so that the user may see the image through the overlay bar. The overlay bar may also be displayed with a solid color background, but this is less desirable since the bar would overwrite that portion of the image.

In response to the camera being placed into one of the operating modes, the overlay bar displays mode-specific information for the user in step **452**. In a preferred embodiment, the mode-specific information displayed on the overlay bar includes a combination of static status information, dynamically updated soft key labels, and interactive instructions pertaining to the particular mode, as described further below. After the mode-specific information is displayed, the mode-specific information is then dynamically updated during the operation of the camera to guide the user through a mode-specific function in step **454**.

To more particularly describe the present invention, refer to FIGS. **7**A and **7**B illustrating the use of dynamic overlay bars on the LCD screen **402** during two different operating modes of the digital camera **110**. As shown, in a preferred embodiment of the present invention, two overlay bars **430** and **432** are simultaneously displayed on the LCD screen **402**, rather than one, to strike a balance between the amount of information provided to the user and the amount of screen area consumed by text and/or graphics.

Overlay bar **430** may be used primarily to display status information and interactive instructions, while overlay bar **432** may be used primarily to display soft key labels **410** corresponding to soft keys **412**. Both overlay bars **430** and **432** may be turned-off in each of the camera operating modes by pressing the overlay "on/off" button **413** so that users can have an unobstructed view of images if they so choose (off), or extra help in operating the camera (on).

Referring to FIG. **7**A, the display of the overlay bars **430** and **432** on the LCD screen **402** during capture mode is shown. In capture mode, the camera **110** supports the actions of preparing to capture an image, and capturing an image through the use of either the LCD screen **402** alone or with the aid of an optional optical viewfinder (not shown).

Overlay bar **430** is updated with capture status information during capture mode, which may include a graphic memory gauge, and text indicating the state of the camera (Ready), for example. The memory gauge provides the user with a constant overview of camera memory usage in terms of disk space, and may also show working memory usage. In a preferred embodiment, the memory bar displays disk space usage as segments filling-up, and displays working memory usage as the bar below those segments, which is constantly updated to reflect current memory status. When the working memory buffers are empty, the bottom part of the bar would be clear. When there is the equivalent of storage for only a few pictures left, the storage gauge may flash and the overlay bar **430** may be updated with a message, such as "Storage Almost Full". If a user tries to take a picture without adequate storage, then the overlay bar **430** may be updated to reflect this status by displaying the message "Inadequate Storage," along with an optional sound from the camera.

The overlay bar **430** may also be updated to reflect other types of capture status information and may be expanded into additional lines if needed. The additional capture status information could include the following: 1) Low Battery Indication—when main batteries run low, a battery icon may replace the storage gauge and a overlay bar **430** may be updated to flash "Battery Low"; 2) Shake Warning Indication—when light level is too low for recommended hand held operation and user has disabled the strobe system "Shake Warning" may be displayed in the overlay bar **430**; and 3) No Focus Indication—when the focus system cannot adequately focus the camera lens, a "No Focus" may be displayed in the overlay bar **430**.

Referring now to FIG. **7**B, the display of the overlay bars **430** and **432** on the LCD screen **402** during play mode is shown. In a preferred embodiment, the play screen layout displays one full-sized image at a time and the user may chronologically scroll through the full-sized images in the LCD screen **402** using the left/right buttons on four-way navigation control button **409**. Users can also play back various media types, such as time-lapse, bursts and slide show images according to either default or user defined play back rates.

In the play mode, overlay bar **430** displays status information relating to the current image being displayed, such as the image name/number, and the date and time of capture. The status information may also include graphical icons indicating what category of images the image belongs to and the image type.

Referring to both FIGS. **7**A and **7**B, besides displaying status information, the second use of the dynamic overly bars of the present invention is to display soft key labels **410** for soft keys **412**. As described in U.S. patent application Ser. No. 08/939,993 filed on Sep. 26, 1997, entitled "A Method And System For Manipulating Images Stored In A Digital Imaging Device," assigned to the present assignee and hereby incorporated by reference, soft keys **412***a*, **412***b*, and **412***c* of the user interface **400** are programmable, i.e., they may be assigned predefined functions. The function currently assigned to a respective soft key **412** is indicated by the soft key labels **410***a*, **410***b*, and **410***c* displayed in overlay bar **432**. After a soft key label **410** has been displayed, the user may then press the corresponding soft key **412** to have the function indicated by its label applied to the current image.

Referring to FIG. **7**B for example, the function assigned to the soft key **412***b* in during play mode is a "Zoom" function, which allows a user to zoom in and out of a displayed image. When the user zooms-in on an image by pressing the soft key **412***b*, the "Zoom" soft key label **410***b* is changed to "Zoom-out". While an image is zoomed, the user may pan around the image using the four-way control button **406**.

The functions assigned to the soft keys **412**, and thus the soft key labels **410**, are changed in response to several different factors. The soft keys **412** may change automatically either in response to user actions, or based on predetermined conditions existing in the camera, such as the current operating mode, the image type, and so on. The soft keys **412** may also be changed manually by the user by pressing the menu button **415**. Providing programmable soft keys **412** increases the number of functions that may be performed by the camera, while both minimizing the number of buttons required on the user interface, and reducing the need to access hierarchical menus.

As stated above, in addition to displaying status information and soft key labels, the dynamic overlay bars of the present invention may also be used to display interactive instructions to the user to guide user through camera functions. Basic types of camera functions include reviewing captured images, deleting images, annotating images with sound, and capturing groups of related images. With conventional cameras, the user would have to memorize complicated key sequences in order to perform these functions.

The present invention, in contrast, uses the dynamic overlay bars to display interactive instructions that guide the user through operations such as adding sound to an image, deleting images and/or sound, and capturing groups of related images. As described in U.S. patent application Ser. No. 08/939,993, for example, after the user has captured an image and the image is displayed for review, the overlay bar **432** automatically reminds the user that he or she has the option to delete the image. That is, one of the soft key labels **410** is changed to "Delete" and the user may then delete image by pressing the corresponding "Delete" soft key **412**.

Referring now to FIGS. **8**A through **8**C, diagrams illustrating how the overlay bars may be used to guide the user through a recording of a sound annotation are shown. The user may initiate the sound annotation function by pressing the record button **426** (see FIG. **5**) while an image is displayed. In response, a record indication, such as a microphone icon, is automatically displayed in overlay bar **430** along with a display of the duration of the recording, as shown in FIG. **8**A. After the sound annotation is recorded, the soft key labels **410** may be updated to display three options "Play", "Delete", and "Save"; where "Play" plays back the recorded sound, "Delete" deletes the recorded sound, and "Save" saves the recorded sound.

If the user is reviewing images in play or review modes, it is possible that the displayed image will have a sound annotation attached. Should the user presses the "Delete" soft key **412**, it is unclear what operation the user wishes to perform: delete the image, delete only the sound, or delete both. Indeed, an inexperienced user may not even consider all three of these possibilities before pressing the "Delete" button. Therefore, to guide the user through this operation, the dynamic overlay bars **430** and **432** are updated to prompt the user whether the image or the sound annotation is to be deleted, as shown in FIG. **8**B. The user may then indicate which is to be deleted by pressing the corresponding soft key **412**.

While reviewing images, it is also possible that the user may press the record button **426**. If the current image already

includes a sound annotation, then it is unclear whether the user wishes to record a new sound annotation over the old one, or whether the user is unaware of the existing sound annotation. Therefore, to make sure the user doesn't inadvertently overwrite the existing sound, the overlay bar **430** is automatically updated to inform the user that sound will not be recorded until the user deletes the existing sound, as shown in FIG. **8**C. In addition, if the user doesn't recall the contents of the previous sound annotation, the user may listen to it before deleting it by pressing "Play", or the user may cancel the record operation altogether by pressing "Exit". Thus, according to the present invention the user is enabled to perform complex tasks in the camera without fumbling through a set of hierarchical menus.

Another use of displaying interactive instructions in the dynamic overlay bars **430** and **432** in accordance with the present invention is to direct the user through image capture sequences. The purpose of directed image capture sequences is to customize the camera's image capture process for a specific application. More specifically, a directed image capture is a camera feature that provides the user with interactive instructions and feedback during capture mode to guide the user through a series of task-oriented image captures.

Upon initiation of a directed image capture sequence, interactive instructions are displayed the dynamic overlay bars **430** and **432** that prompt the user to perform specific operations (capture image or capture sound), and for prompting the user to enter specific input (name and date). Customized directed image captures can be tailored to specific professions, such as insurance claims adjusters and real estate agents, who would benefit from the use of a digital camera to capture groups of related pictures.

Referring now to FIGS. **9**A and **9**B, diagrams illustrating example directed image capture screens are shown. The example shown in FIG. **9**A may pertain to an insurance-related directed image capture that prompts an insurance claims adjuster to take a series of pictures of a damaged vehicle, or it may pertain to a real estate application that guides a user through taking photos of a house for sale.

In the insurance example, once the directed image capture has started, the user may be instructed to take various views of the damaged car. The user may also be shown the number of the current image in that sequence, and the total number of images to be captured.

After the views of the car are taken, the directed image capture may then prompt the user to enter specific information, such as the name of the image, as shown in FIG. **9**B. The user may then enter text by choosing letters using the four-way control button **409**. For insurance purposes, the directed image capture may also request the user to input the owner's name, license plate number, claim number, and so on. The sequence of images and corresponding information may then be downloaded from the camera or to a host computer for automated database storage or web page generation.

In one embodiment of the present invention, one or more directed image capture sequences may be provided in the camera as built-in functions, especially if the camera is tailored for specific industries.

However, in a second aspect of the present invention, the camera is made more flexible by implementing the directed image capture sequences as a set of program instructions that are externally loaded into the camera. Once loaded in the camera **110**, the instructions are then preferably executed by the GUI-based system software running on CPU **344**.

FIG. **10** is a block diagram illustrating the contents of ROM **350** where the software is stored, and DRAM **346** where the software is executed. The software **600** may include a control application **602**, a toolbox **604**, drivers **612**, a kernel **614**, and a startup/configuration module **616**. The control application **602** is the main program that controls high-level functions of the digital camera and is responsible for interfacing with functions in the toolbox **604**.

Toolbox **604** comprises selected function modules that control how the digital camera captures and manipulates images. The modules may include image processors **606**, a camera control shell **608**, and a script interpreter **610**. Image processors **606** are programs for enhancing (e.g., adjusting the contrast, sharpening, converting the image to gray-scale, etc.) the digital image received from imaging device **114**. Camera control shell **608** receives and processes data structures for controlling camera functions. Script interpreter **610** translates and executes script statements, which are used to provide the directed image capture sequences and other camera **110** features, as explained below.

Drivers **612** comprise program instructions for controlling various camera **110** hardware components, such as motor **234** (FIG. **2**) and a flash (not shown). Kernel **614** comprises program instructions providing basic underlying camera operating system services including synchronization routines, task creation, activation and deactivation routines, resource management routines, etc. Startup/configuration **616** comprises program instructions for providing initial camera **110** start-up routines such as the system boot routine and system diagnostics

When the camera **110** is first turned on and booted up, the startup/configuration **616** module begins to execute and loads the drivers **612**, the kernel **614**, the control application **602**, and system files containing configuration information into DRAM **346**. Thereafter, operation of the camera is passed to the control application **602**. In an alternative embodiment, the software **600** may executed out of ROM **350** in order to reduce the size of DRAM **346**.

The directed image capture sequence **618** may be loaded into the digital camera **110** from the removable memory **354** (FIG. **3**), a host computer, or a network, and stored in DRAM **346** to run in place of the control application **602**. In a preferred embodiment, the directed image capture sequence **618** is implemented using a script, which is a program written with text-based commands that may be easily written by the user. As used herein, a script may be written in any intrepreted language, such as Basic and Lisp, for example.

Once loaded into the camera, the script may be selected by the user from a menu where it is displayed for selection, and is thereafter executed by the control application **602** by passing the script to the script interpreter **610**. The script interpreter **610** then translates and executes the script instructions comprising the directed image capture sequence **618** one-by-one.

In an alternative embodiment, a directed image capture sequence **618** may be implemented as a traditional application program, rather than a script. However, an application program is typically written by a software developer in a traditional computer language, such as C++, compiled, and stored in machine language, which is a more complicated process than adding new functions to the camera via a text-based interpreted script.

FIG. **11** is a flow chart illustrating an exemplary process of installing and running a script-based directed image capture in a preferred embodiment of the present invention.

The process begins by inserting the removable memory **354** in step **700**. When the removable memory **354** is installed, the removable memory **354** is mounted by the operating system **600** in step **702**. Thereafter, the operating system searches for system files on the removable memory **354**, which alert the digital camera **110** to the presence of an external program, in step **704**.

Any system files found on the removable memory **354** and corresponding directed image capture sequences **618** are then installed and made available to the user for selection via menu choices that appear on the LCD screen **402** in step **706**. In a preferred embodiment, steps **704** and **706** are implemented as a hot-mount process when the removable memory **354** is inserted into the camera **110**, as described in U.S. patent application Ser. No. 09/032,385, entitled "Method And System For Dynamically Updating Software Functions In A Digital Capture Device," filed on Feb. 26, 1998, which is assigned to assignee of the present application and herein incorporated by reference.

Once the list of available directed image capture sequences **618** are displayed, the user selects one of the directed image capture sequences **618** to run in step **708**. In a preferred embodiment, the list showing the available directed image capture sequences may be categorized in menus for easier selection. For example, assume a real estate agent has three different scripts for capturing images of different types of properties. The agent may name or create categories for the directed image capture sequences called "commercial", "industrial", and "residential", for instance. Selecting the residential category, for example, will cause a list of directed image captures to be displayed that are designed to capture pictures of different types of residential properties, such as one, two, and three bedroom homes. The user may then select a desired script depending on the particular house to be shot.

In one preferred embodiment, the directed image capture selections displayed in the menus may be erased from the camera by rebooting the camera, or by removing the removable memory **354** from the camera **110**.

After the user selects one of the directed image capture sequences **618** to run, the script interpreter **610** begins interpreting the directed image capture sequence **618** in step **710**, and control is passed from the control application **602** to the script. In step **712**, the script interpreter **610** fetches the first command comprising the directed image capture sequence **618**.

It is then determined whether the fetched command is a script "WaitForShutter" command in step **714**. This command causes control of the camera **110** to pass back to the control application **602** until the user presses the shutter button **418** to capture an image. The "WaitForShutter" command is preferably called with a quoted string parameter that is used in the dynamic overly bar **430** as the prompt to the user requesting an image capture (e.g., "Take photo of kitchen").

If the command is a "WaitForShutter" command in step **714**, then control is returned to the script after the user presses the shutter button **418** in step **716** to capture an image. If the fetched command is not a "WaitForShutter" command in step **714**, then the script interpreter **610** interprets and executes the command in step **718**.

After the user presses the shutter button **418** or after a script command has been executed, it is determined if the end of the script has been reached in step **720**. If not, then the next command is fetched in step **712**, and the process continues until the end of the script is reached, at which point control is returned to the control application **602** in step **722**.

Besides the "WaitForShutter" command, scripts may include two other categories of script commands. One category of commands pertain to camera settings, controls and other camera parameters specific to the subject and/or scene being captured. (ie: White Balance Modes, Exposure Modes, and Focus Modes). This category of commands enable users to input "Hints" optimizing the camera's photo systems for specific photographic conditions.

The other category of commands may pertain to file system operations and image tagging functions specific to the way in which image data is stored in memory. (ie: Guided Capture, Prompted Text/Audio Annotation, and Automated Image Grouping/Cataloging/Indexing.) This category of commands is particularly useful when used in conjunction with desktop computer applications where the hosting application is coordinated to take advantage of the preformatted media organization and tag information. For example, while a directed image capture sequence guides the user though a series of steps to create an image grouping, the script commands comprising the sequence generate appropriate tags and data structures to group the images and text captured during the sequence.

No matter whether the dynamic overlay bars of the present invention are used to display status information, soft key labels, or interactive instructions, as described herein, one important component affecting the user's experience is the method used to display the overlay bars on the image.

One approach would be the follow prior art techniques for displaying text (e.g. image name) over an image. This approach typically includes the following steps: 1) fetching the image to be displayed, which is typically stored in JPEG format, 2) decompressing and resizing the image, 3) displaying the decompressed image block-by-block, and then after the image is fully displayed, 4) writing the text on top of the image.

The problem with this method is that is visually unappealing to the user, and it reduces the performance of camera when the user turns-off the text display while viewing the image. The reason the method reduces camera performance is the following. When text or graphics are displayed over the image, they obscure a portion of the image. And when the text is turned-off, the obscured portions of the image must be displayed so that the original image is seen without the text. In order to do this, however, the entire JPEG image must be fetched and decompressed again so that the obscured portions of the image can be displayed on the LCD, which can be a time consuming operation.

A third aspect of the present invention overcomes these disadvantages by providing an improved method and system for displaying the overlay bars that not only enhances the visual effect associated with the overlay bars, but also eliminates the need to re-decompress the JPEG image data when the user turns-off the overlay bars, thereby increasing performance of the camera.

According to this aspect of the present invention, the overlay bars are displayed first, followed by the image, wherein the image is made to appear as though it is sliding underneath the overlay bars as it is being displayed. The image appears as though is it is sliding underneath the overlay bars because the image is displayed on the LCD screen **402** line-by-line or block-by-block (as used herein, a block may include anywhere from one line to sixteen lines of image data). As the display of the image progresses from the top of the screen **402**, the image therefore appears to be displayed behind the overlay bars **430** and **432** which are already present on the LCD screen **402**.

The overlay bars **430** and **432** are also provided with a translucent background so that so that the overlay bars **430** and **432** themselves do not obscure the image, but the text is easily distinguishable from the colors of the displayed image. The result is that after the image has been displayed, the overlay bars appear as a separate layer over the image. Further, the portions of the original image that intersect with the overlay bars **430** and **432** are saved, so that when the user turns-off the overlay bars **430** and **432**, only these portions of the image are redisplayed to restore the image. Thus this aspect of the present invention eliminates the need to re-decompress and display the entire image again, thereby increasing system performance.

Where typically, specialized hardware would be required to achieve the above-described effects, the present invention accomplishes the task through software and the manipulation of several memory buffers, as shown in FIG. **12**A.

FIG. **12**A is a diagram illustrating a buffer organization for displaying overlay bars, which in a preferred embodiment, resides in DRAM **346**. The buffer organization includes an overlay bar buffer **540**, a backstore buffer **542**, and a display buffer **544**. According to the present invention, the overlay bar buffer **540** is used to store the graphics data (graphics and text) that will be displayed in the overlay bars **430** and **432**. In a preferred embodiment the overlay bar buffer **540** is divided into a top and bottom portion, which store twenty lines of data each that correspond to the top and bottom overlay bar **430** and **432**, respectively.

The backstore buffer **542** is used to store original image data corresponding to the area of the LCD screen **402** where the overlay bars **430** and **432** will be displayed. The backstore buffer **542** is also divided into a top and bottom portion that are the same size as the top and bottom portions of the overlay bar buffer **540**.

As is typical in most rendering systems, the display buffer **544** is used to store the actual data that is to be displayed on the LCD. The data in the display buffer is accessed by LCD controller **390** (FIG. **3**) and displayed on the LCD.

FIG. **12**B is a flow chart illustrating the process of displaying overlay bars on the LCD in accordance with the present invention. The first step in the process is to preferably receive an input line of decompressed image data from an image processing system in step **800**. The process may also be modified to receive an input block of decompressed image data. In a preferred embodiment, the image processing system for providing the input data may include an image decompressor for decompressing the image data, and a resizer for resizing the lines of image data to fit the size of LCD screen **402**.

Next, it is determined whether the overlay bars **430** and **432** are turned-on or off in step **802**. If the overlay bars are turned-off, then the line of image data is copied directly to the display buffer **544** in step **804** for display on the LCD screen **402** and the process continues. If the overlay bars remain off for the duration of the time it takes to display the image line-by-line or block-by-block, then the entire image is displayed on the LCD screen **402** using only the display buffer **544**.

If the overlay bars are turned-on in step **802**, then it is determined whether the line of data will be displayed within the area of the LCD screen **402** that is occupied by an overlay bar in step **806**. If the line is within an overlay bar, the line is copied into the backstore buffer **542** in step **808**. The purpose of copying the line to the backstore buffer **542** is to save the portion of the image that will be displayed underneath the overlay bars **430** and **432**.

After the current line of image data is copied into the backstore buffer **542**, the corresponding line stored in the overlay bar buffer **540** is merged with the current line in the backstore buffer **542** in step **810**. The purpose of merging the two lines is to display the background of the overlay bars **430** and **432** translucently over the image on the LCD screen **402**. This is done by halving the luminance value of each pixel of the image data from the backstore buffer **542** that falls within the bounds of an overlay bar **430** or **432**, and overwriting each pixel in the line of image data that falls under a pixel of text or graphic data from the overlay bar buffer **540**. Halving the luminance value of the image data causes the colors of the image that overlap an overlay bar **430** or **432** to be half as bright, thus giving the overlay bar **430** or **432** a translucent appearance and allowing the user to see the image through the overlay bar **430** or **432**, as shown in FIG. **7**B. In an alternative embodiment, the translucency of the overlay bars **430** and **432** is provided by increasing, rather than decreasing, the luminance value of each image pixel falling within the area of an overlay bar. In this case, the text displayed in the overlay bars **430** and **432** is displayed using a dark color.

As the line from the overlay bar buffer **540** is merged with the line from the backstore buffer **542**, the resulting merged line is written into the display buffer **544** for display in step **812**. If the current line is the last line of image data in step **814**, then the process ends. Otherwise the next line of image data is received in step **800** and the process continues. In an alternate embodiment of the present invention, the determination of whether the overlay bars **802** are on/off in step **802** may be performed after copying the input line to the backstore buffer **542** in step **8**. In this embodiment, the input line is copied into the backstore buffer **542** even when the overlay bars **430** and **432** are off.

In a preferred embodiment of present invention, the software **600** controlling the digital camera **110** is implemented as event driven software, which responds to input from the user (select menu, press button, etc.) or other applications at unregulated times. When, for example, the user first switches to play mode and/or selects a new image to display, the first steps that are performed in the process are to blank the LCD screen **402**, fill the overlay bar buffer **540** with relevant mode-specific information, and then contents of the overlay bar buffer **540** and the backstore buffer **542** are merged and written to the display buffer **544**. In this case, the backstore buffer **542** may contain black or white pixel values to provide the blank screen. Thereafter, the process proceed as described in FIG. **13**.

If the user turns-off the overlay bars **430** and **432** while an image is displayed, then the process is interrupted and software **600** copies the entire contents of the backstore buffer **542**, which contains the original image data, to the display buffer **544** for display. This causes the overlay bars to disappear from the LCD screen **402** and restores the original image without having to re-decompress and display the entire image over again.

If the user then turns-on the overlay bars **430** and **432**, the software **600** merges the contents of the overlay bar buffer **540** and the backstore buffer **542** to provide the translucent bars and text over the image, and then copies the result to the display buffer **544** for display. This may be done by executing step **812** and **814** for each line of the data in the buffers **540** and **542**.

Also, when the overlay bars **430** and **432** are on, if the overlay bars **430** and **432** are updated by the control application **602** due to a change in status or instructions, the

contents of the overlay bar buffer **540** and the backstore buffer **542** are remerged and written into the display buffer **544** for display.

A method and system for controlling user interaction in a digital imaging device using dynamic overlay bars has been disclosed, which enables a user to apply camera functions and features to images with minimum effort, while allowing for easy viewing of the image. In addition, the present invention displays dynamic interactive instructions to the user in the form of directed image capture to guide the user through complex task, without the need for help screens or for the user to remember complicated key sequences. Finally, the present invention provides a method for displaying overlay bars that eliminates the need to re-decompress and display the image when the user turns-off the overlay bars, which increases the responsiveness of the camera.

Although the present invention has been described in accordance with the embodiments shown, one of ordinary skill in the art will readily recognize that there could be variations to the embodiments and those variations would be within the spirit and scope of the present invention. For example, the functions assigned to the soft keys, the number of soft keys, and the placement of the soft keys and labels in and around the display may vary. The method and system may also be implemented in digital imaging devices having only two modes, but that have multiple navigation screens within the "play mode" Accordingly, many modifications may be made by one of ordinary skill in the art without departing from the spirit and scope of the appended claims.

What is claimed is:

1. A method for controlling user interaction in a hand-held digital camera, the hand-held digital camera having an integrated display, the method comprising the steps of:

a) storing a directed image capture sequence comprising a set of program instructions in the hand-held digital camera;

b) executing the directed image capture sequence in the hand-held digital camera to display interactive instructions on the integrated display that prompt the user to perform a first operation; and

c) in response to the user performing the first operation, automatically updating the interactive instructions to prompt the user to perform a second operation, thereby guiding the user through a series of related image captures, while minimizing the number of key sequences the user must memorize in order to perform the operations.

2. The method of claim **1** wherein step a) further includes the step of providing the directed image capture sequence by externally loading the program instructions into the hand-held digital camera.

3. The method of claim **2** wherein step a) further includes the step of providing the program instructions as a text-based script.

4. The method of claim **3** wherein step b) further includes the step of executing the directed image capture sequence by interpreting the text-based script.

5. The method of claim **4** wherein step c) further includes the step of prompting the user for specific information, and entering the specific information on a text entry screen.

6. The method of claim **5** further includes the step of displaying the interactive instructions on a translucent overlay bar.

7. A method for directing image capture sequences in a hand-held digital camera having integrated display, the method comprising the steps of:

a) externally loading a script comprising program commands into the hand-held digital camera;

b) displaying the script as a menu item for selection by a user;

c) in response to the user selecting the script menu item from the menu, passing operational control from the hand-held digital camera to a script interpreter;

d) interpreting and executing each of the script commands, wherein a first plurality of the script commands are for displaying interactive instructions on the integrated display requesting the user to perform specific camera operations for guiding the user through a series of image captures;

e) passing operational control from the script interpreter to the hand-held digital camera after the script has requested the user to capture an image;

f) allowing the user to capture the image; and

g) repeating steps d–g until the script completes execution.

8. The method of claim **7** wherein step a) further includes the step of loading the script into the hand-held digital camera from a removable memory.

9. (Once Amended) The method of claim **8** wherein step f) further includes the step of passing operational control from the hand-held digital camera to the script after the user has captured the image.

10. The method of claim **9** wherein step g) further includes the step of passing operational control back to the hand-held digital camera after the script completes execution.

11. A hand-held digital camera comprising:

an imaging device for capturing image data;

a memory coupled to the camera for storing the image data as captured images;

an integrated display for displaying a captured image;

means for loading an external script comprising program commands into the memory; and

a processor coupled to the camera and to the memory for controlling operation of the digital camera, the processor including means for interpreting and executing each of the script commands, wherein when the script commands are executed, interactive instructions are displayed on the integrated display requesting the user to perform specific camera operations, the processor including means for waiting on the user to perform the specific camera operations before displaying additional interactive instructions, thereby guiding the user through a series of related image captures.

12. A digital imaging device as in claim **11** wherein the means for interpreting and executing each of the script commands comprises a script interpreter.

13. A digital imaging device as in claim **12** wherein operation control of the digital imaging device is controlled by a control program stored in memory and executed by the processor, the control program comprising,

means for displaying the script as a menu item on the display for selection by a user; and

means for passing operational control to the script interpreter in response to the user selecting the script menu item from the menu.

14. A method for controlling user interaction in a hand-held digital camera having an integrated display, the method comprising the steps of:

d) providing the hand-held digital camera with a directed image capture sequence comprising a set of program

instructions for guiding a user through a series of related image captures;

e) executing the directed image capture sequence in the hand-held digital camera such that a first interactive instruction is displayed on the integrated display prompting the user to capture a first image;

f) waiting for the user to capture the first image;

g) in response to the user capturing the first image, displaying a second interactive instruction prompting the user to capture a second image; and

h) storing the images as a related group of images.

15. A method as in claim **14** wherein step e) further includes the steps of:

i) prompting the user to enter information regarding the first and second images, and

ii) storing the information with the related group of images.

* * * * *

EXHIBIT 4

US006223190B1

(12) **United States Patent**
Aihara et al.

(10) **Patent No.: US 6,223,190 B1**
(45) **Date of Patent: Apr. 24, 2001**

(54) **METHOD AND SYSTEM FOR PRODUCING AN INTERNET PAGE DESCRIPTION FILE ON A DIGITAL IMAGING DEVICE**

(75) Inventors: **Tim Takao Aihara**, Yono (JP); **Rodney Somerstein**, San Jose, CA (US)

(73) Assignee: **FlashPoint Technology, Inc.**, San Jose, CA (US)

(*) Notice: Subject to any disclaimer, the term of this patent is extended or adjusted under 35 U.S.C. 154(b) by 0 days.

(21) Appl. No.: **09/059,611**

(22) Filed: **Apr. 13, 1998**

(51) **Int. Cl.**[7] **G06F 17/21**
(52) **U.S. Cl.** **707/513**; 348/207; 348/552
(58) **Field of Search** 707/501, 513, 707/10; 396/297, 300; 348/552, 333.01–333.05, 207; 345/328; 709/218, 219, 231

(56) **References Cited**

U.S. PATENT DOCUMENTS

5,335,072		8/1994	Tanaka et al.	348/232
5,633,678		5/1997	Parulski et al.	348/232
5,640,193	*	6/1997	Wellner	348/7
5,649,186	*	7/1997	Ferguson	707/10
5,659,729	*	8/1997	Nielsen	707/3
5,721,908	*	2/1998	Lagarde et al.	707/10
5,898,833	*	4/1999	Kidder	709/234
6,035,323	*	3/2000	Narayen et al.	707/501 X

FOREIGN PATENT DOCUMENTS

0 650 125	4/1995	(EP) .
WO 98/14887	4/1998	(WO) .

* cited by examiner

Primary Examiner—Joseph H. Feild
(74) *Attorney, Agent, or Firm*—Sawyer Law Group LLP

(57) **ABSTRACT**

A method and system for generating an HTML (hypertext markup language) file including images captured by a digital imaging device, the digital imaging device having a display. A script and it's predefined model are provided to the digital camera. The script is comprised of a set of software program instructions. The digital camera executes the script to display interactive instructions on the display that prompt a user to perform specific operations. In response to the user performing the specific operations, the digital camera automatically updates the interactive instructions, such that the user is guided through a series of related image captures to obtain a series of resulting images. The digital camera then generates an HTML file including the resulting images, wherein the HTML file is formatted in accordance with the predefined model.

19 Claims, 11 Drawing Sheets

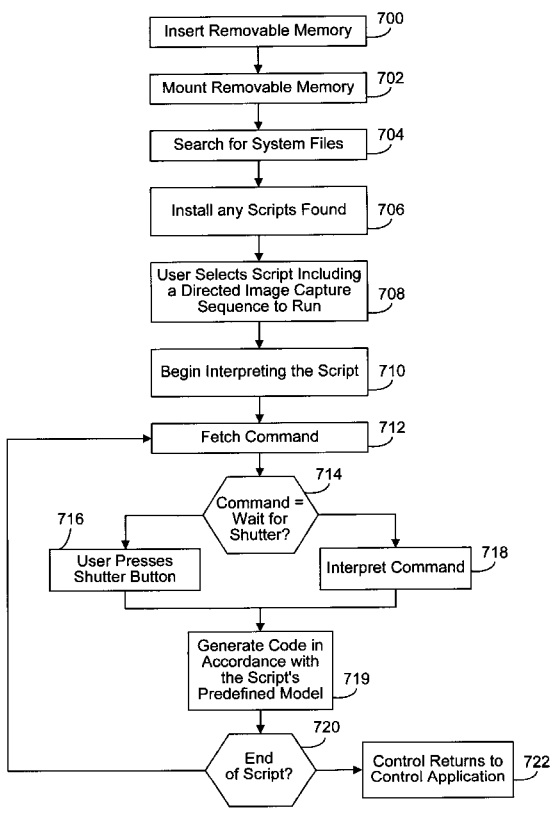

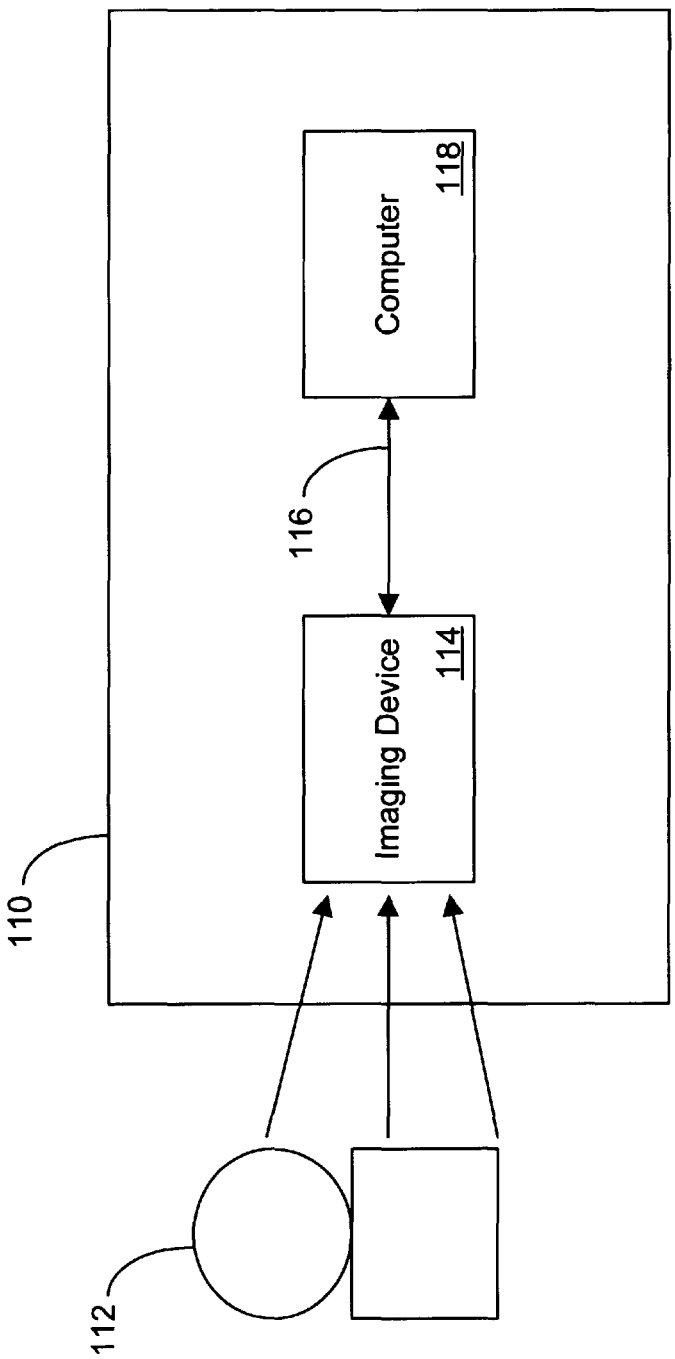

FIG. 1

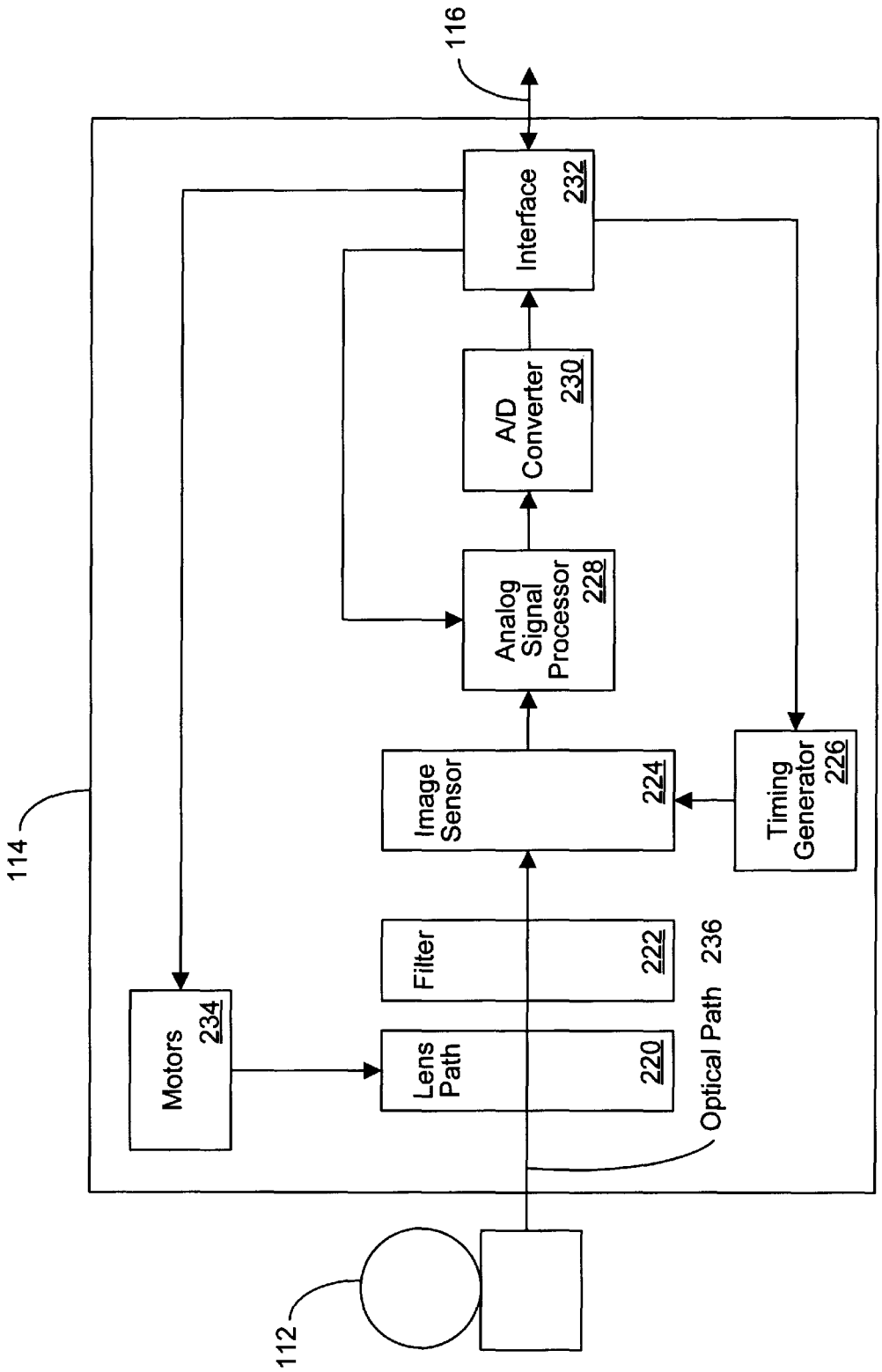
116
Interface 232
A/D Converter 230
Analog Signal Processor 228
Image Sensor 224
Timing Generator 226
Filter 222
Lens Path 220
Motors 234
Optical Path 236
114
112

FIG. 2

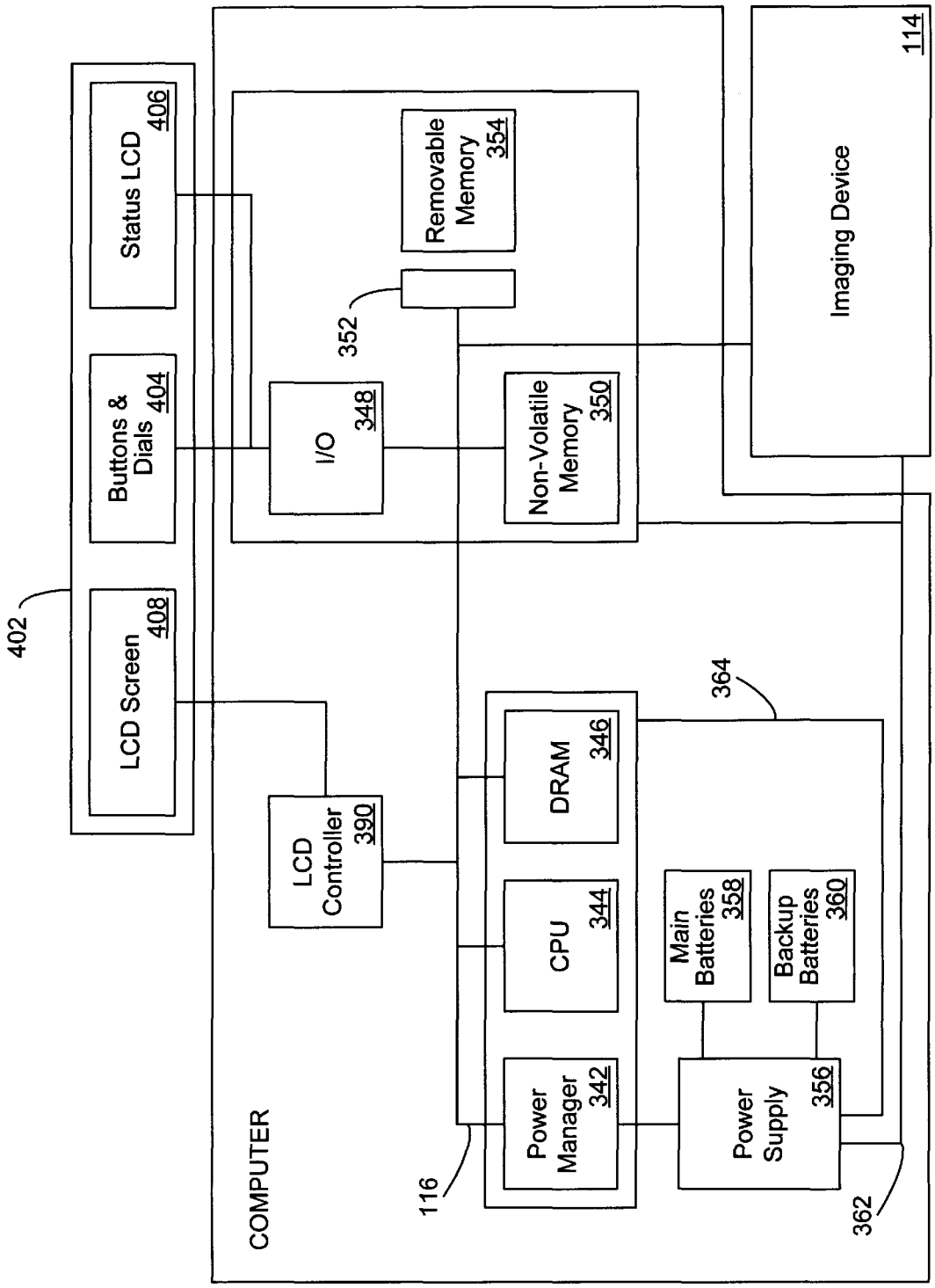
Status LCD 406
Buttons & Dials 404
LCD Screen 408
402
Removable Memory 354
352
I/O 348
Non-Volatile Memory 350
Imaging Device 114
LCD Controller 390
DRAM 346
CPU 344
Power Manager 342
Main Batteries 358
Backup Batteries 360
Power Supply 356
364
116
362
COMPUTER

FIG. 3

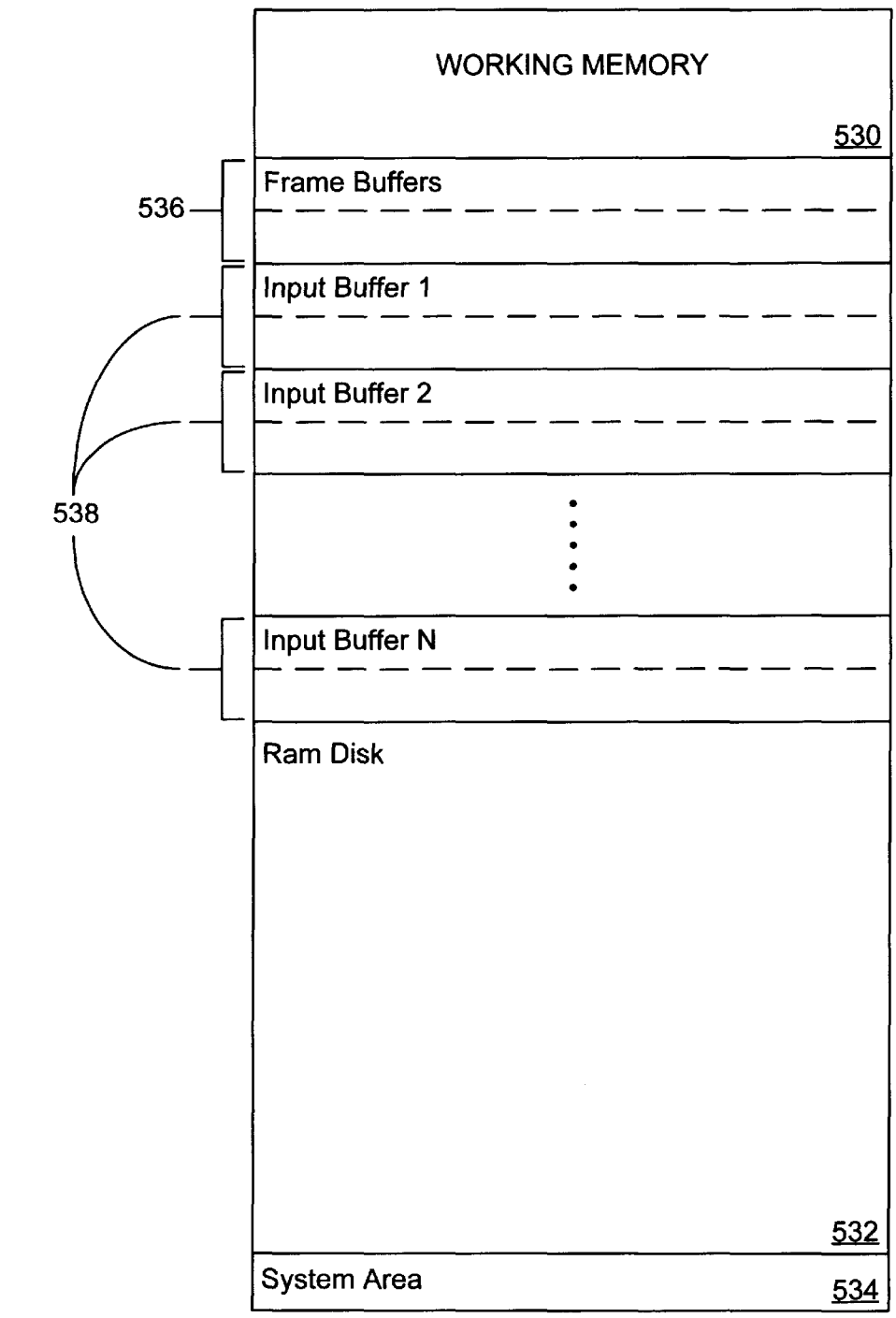
346
WORKING MEMORY
530
Frame Buffers
536
Input Buffer 1
Input Buffer 2
538
Input Buffer N
Ram Disk
532
System Area
534

FIG. 4

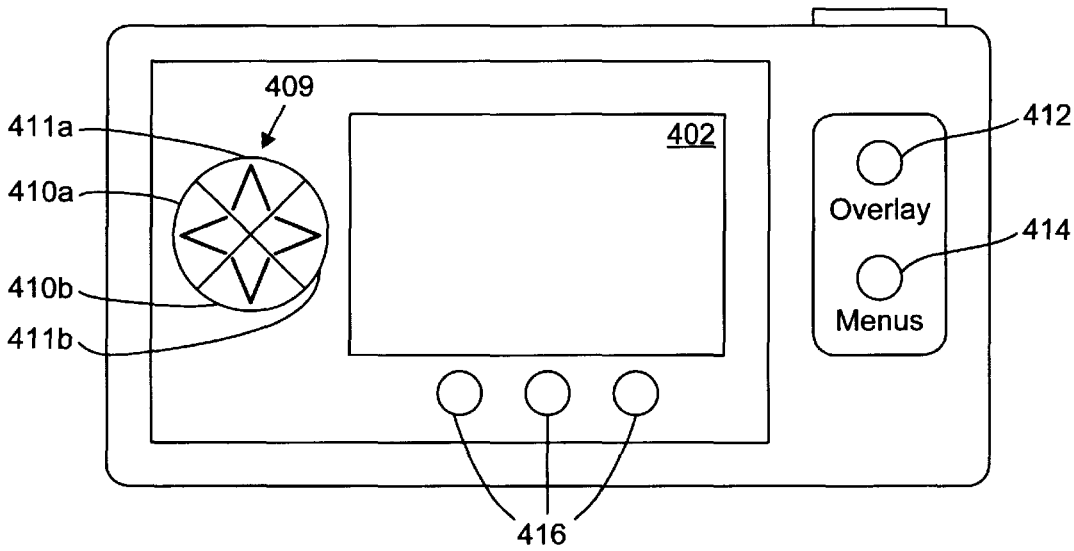
409
411a
410a
410b
411b
402
412
Overlay
414
Menus
416

FIG. 5A

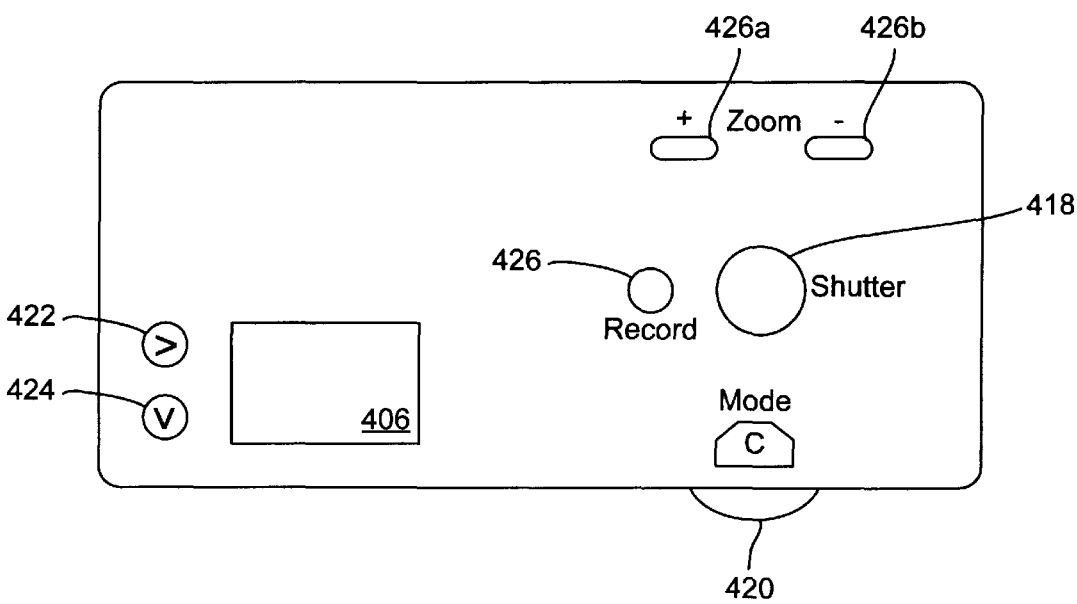
426a
426b
+
Zoom
-
418
426
Record
Shutter
422
424
406
Mode
C
420

FIG. 5B

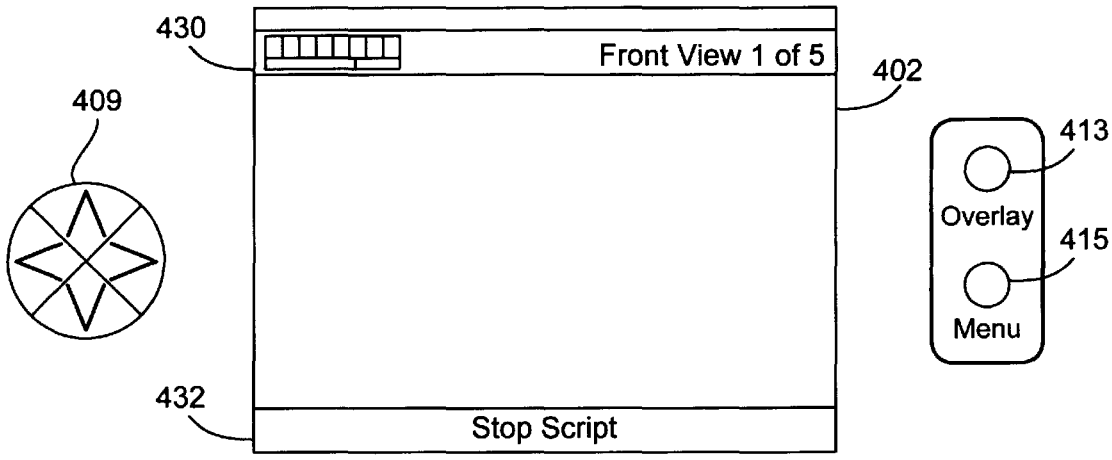
430
Front View 1 of 5
402
409
413
Overlay
415
Menu
432
Stop Script

FIG. 6A

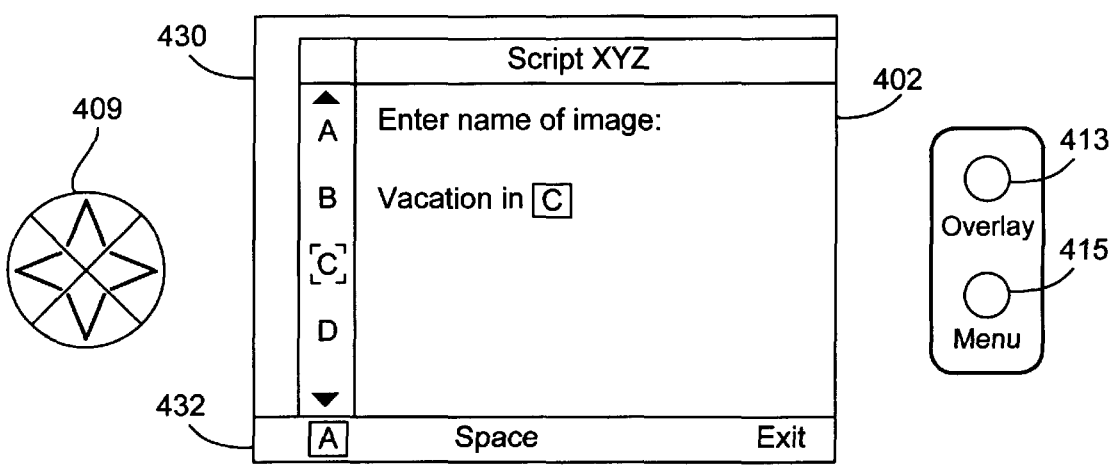
430
Script XYZ
402
409
A
Enter name of image:
B
Vacation in C
C
D
413
Overlay
415
Menu
432
A
Space
Exit

FIG. 6B

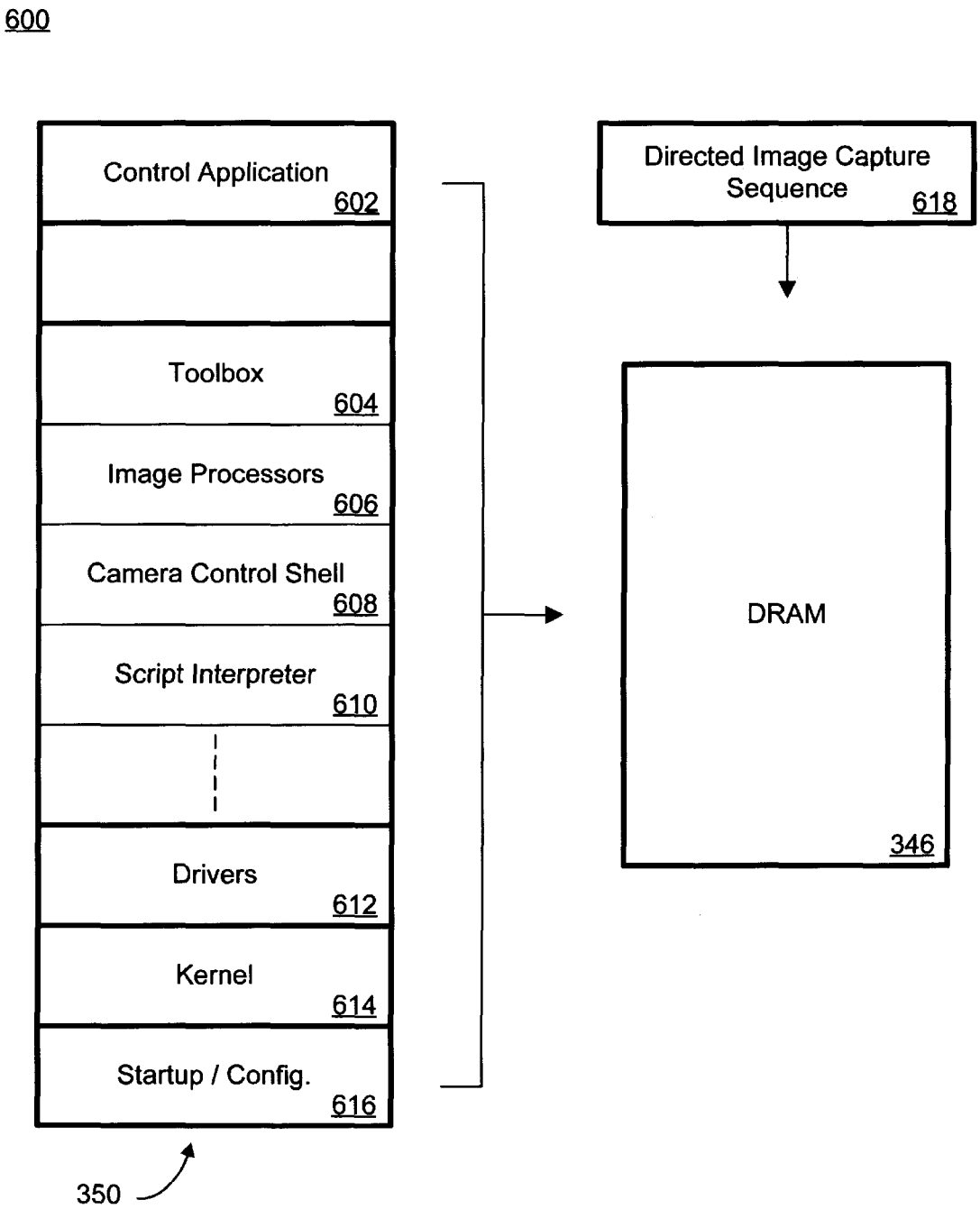
600
Control Application
602
Toolbox
604
Image Processors
606
Camera Control Shell
608
Script Interpreter
610
Drivers
612
Kernel
614
Startup / Config.
616
350
Directed Image Capture Sequence
618
DRAM
346

FIG. 7

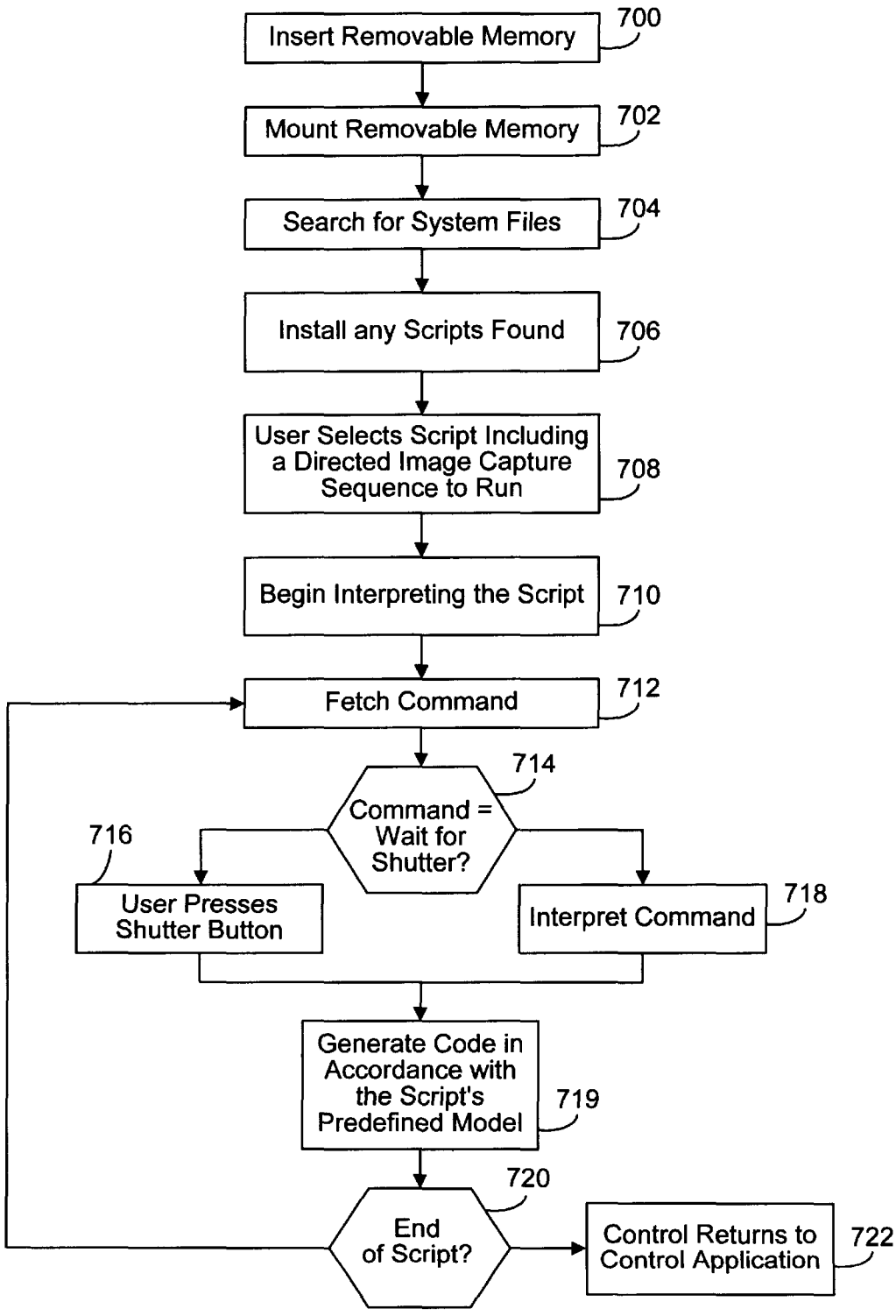
Insert Removable Memory
700
Mount Removable Memory
702
Search for System Files
704
Install any Scripts Found
706
User Selects Script Including a Directed Image Capture Sequence to Run
708
Begin Interpreting the Script
710
Fetch Command
712
Command = Wait for Shutter?
714
716
User Presses Shutter Button
Interpret Command
718
Generate Code in Accordance with the Script's Predefined Model
719
End of Script?
720
Control Returns to Control Application
722

FIG. 8

Christopher Realty, Inc.

958 Willowleaf Drive

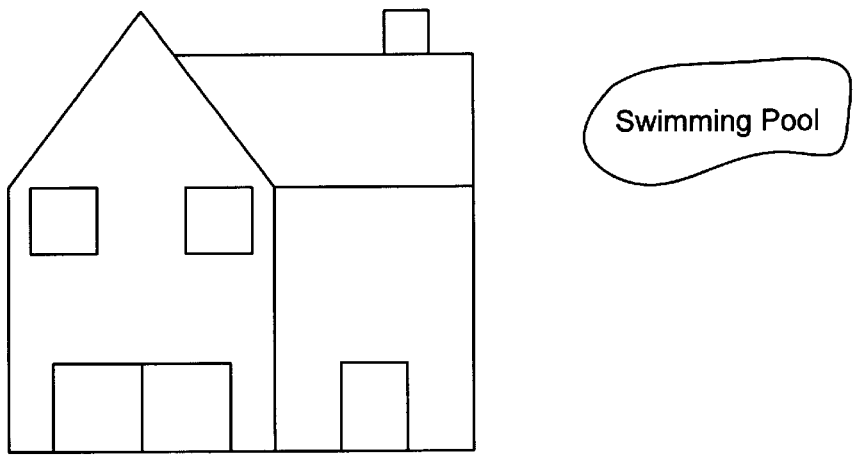

Sq. Footage: 3500
Price: $1000000

Lot Size: 3/4 acre(s)
Age: 5 year(s)

3 bedroom(s)
2.5 baths
2 car garage

Agent: S. Saylor (408) 555-1212

FIG. 9

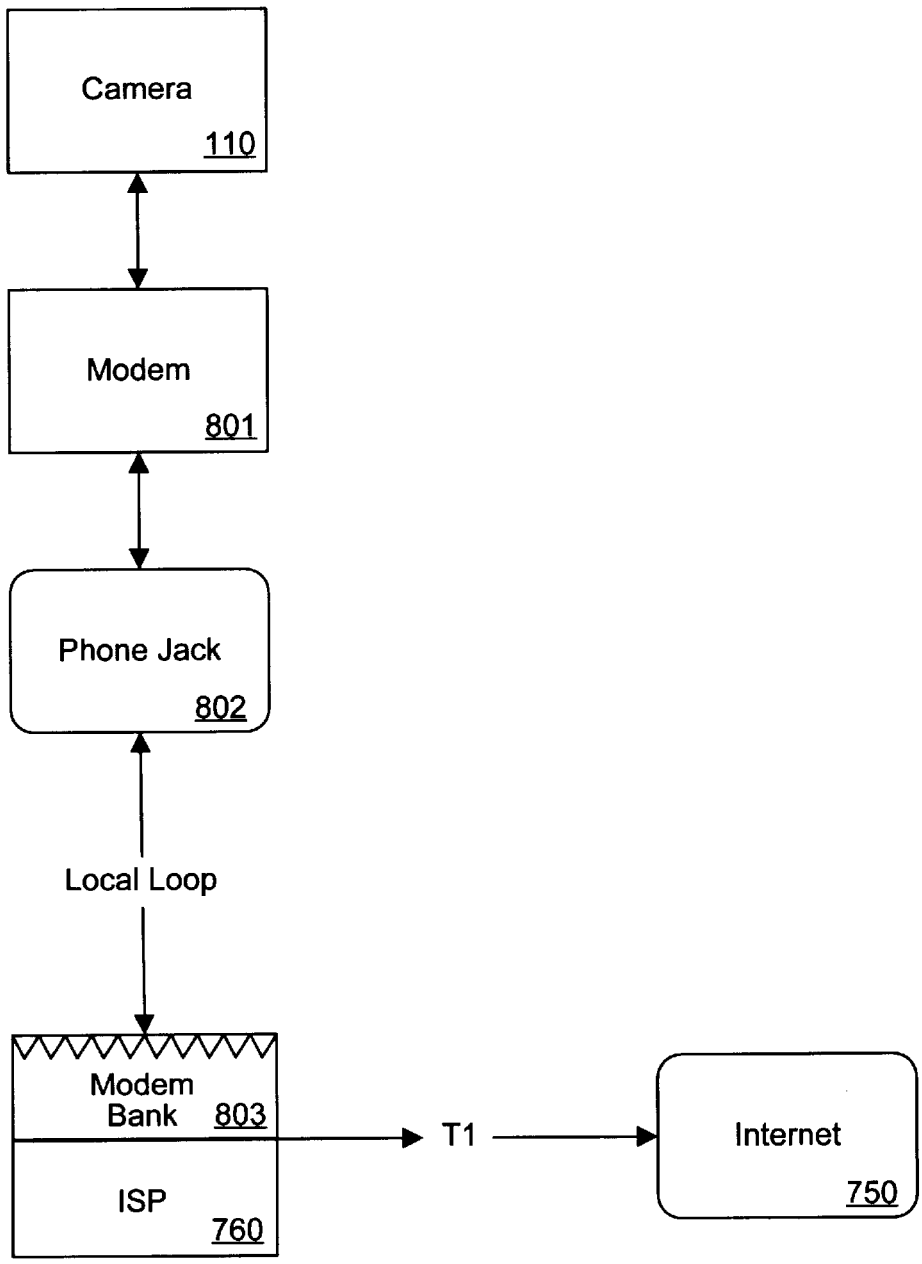
Camera
110
Modem
801
Phone Jack
802
Local Loop
Modem
Bank 803
ISP
760
T1
Internet
750

FIG. 10

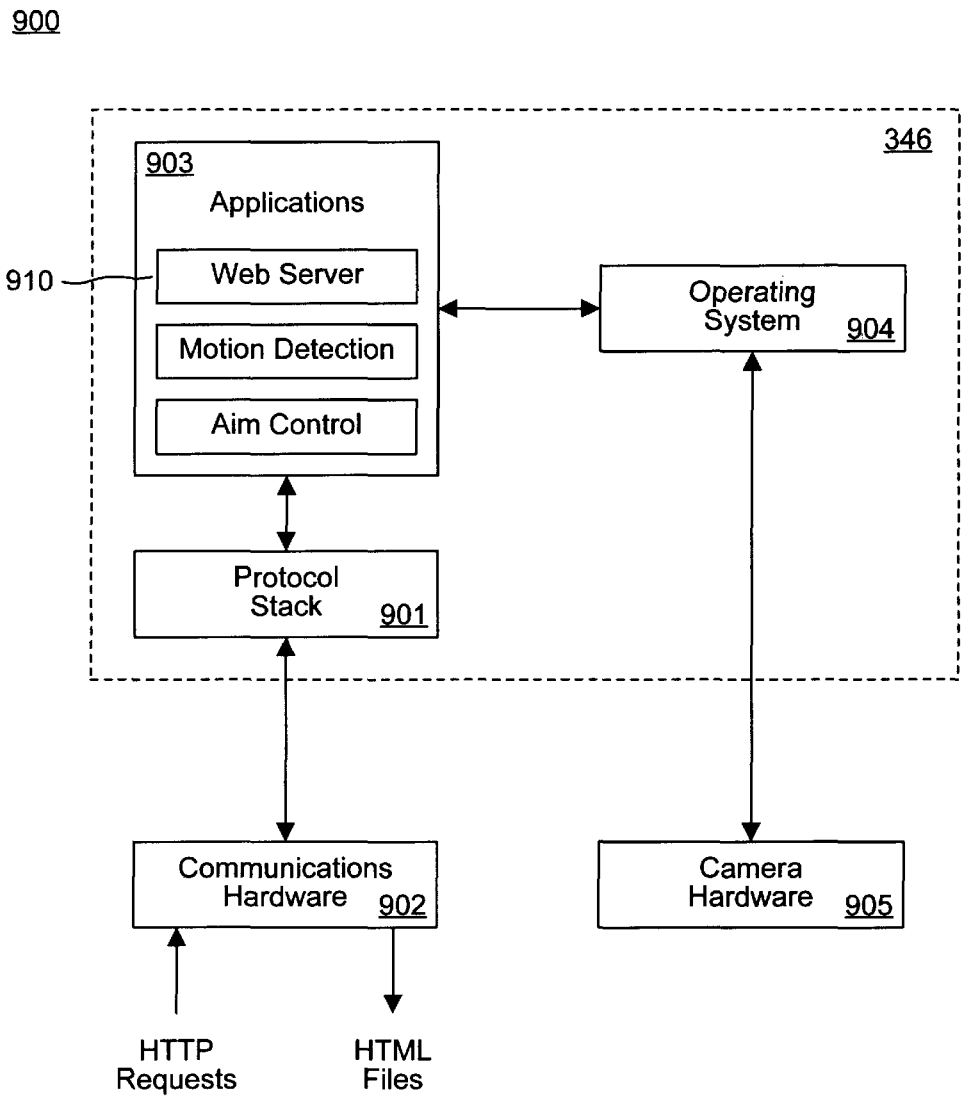
900
346
903
Applications
910
Web Server
Motion Detection
Aim Control
Operating System
904
Protocol Stack
901
Communications Hardware
902
Camera Hardware
905
HTTP Requests
HTML Files

FIG. 11

METHOD AND SYSTEM FOR PRODUCING AN INTERNET PAGE DESCRIPTION FILE ON A DIGITAL IMAGING DEVICE

FIELD OF THE INVENTION

The field of the present invention pertains to digital image capture devices. More particularly, the present invention relates to a method and system for producing HTML using the electronic systems within a digital camera.

BACKGROUND OF THE INVENTION

Most digital cameras today are very similar in size and behavior to conventional point-and-shoot cameras. Modern digital cameras for taking pictures of scenes and the like typically include an imaging device which is controlled by a computer running a software program. When an image is captured, the imaging device is exposed to light and generates raw image data representing the image. The raw image data is typically stored in a single image buffer where it is then processed and compressed by the processor. Many types of compression schemes are used to compress the image data, with the joint photographic expert group (JPEG) standard being the most popular. After the processor processes and compresses the raw image data into JPEG image files, the processor stores the JPEG image files into an internal memory or on an external memory card.

Some digital cameras are also equipped with a liquid-crystal display (LCD) or other type of display screen on the back of the camera. Through the use of the LCD, the processor can cause the digital camera to operate in one of two modes, play and record, although some cameras only have a record mode. In play mode, the LCD is used as a playback screen for allowing the user to review previously captured images either individually or in arrays of four, nine, or sixteen images. In record mode, the LCD is used as a viewfinder in which the user may view an object or scene before taking a picture.

Besides the LCD, digital camera user interfaces also include a number of buttons or switches for setting the camera into one of the two modes and for navigating between pictures in play mode. For example, most digital cameras include two buttons labeled "−" and "+" that enable a user to navigate or scroll through captured pictures. For example, if the user is reviewing pictures individually, meaning that single pictures are displayed full-sized in the LCD, pressing one of navigation buttons causes the currently displayed picture to be replaced by the next picture.

The electronic nature of the digital camera's pictures make them particularly well suited for use with other electronic applications. The pictures are also particularly well suited for use in the creation of complex text and image documents. Using document creation software applications, the pictures can be incorporated into a document along with corresponding text annotations or descriptions. Once created, the documents can be electronically transmitted (e.g., via email) or printed and distributed conventionally. The resulting document can be formatted in accordance with any of a number of popular page description languages used for the Internet, such as HTML (hypertext markup language), XML (extensible markup language), java script, and the like.

For example, once the HTML file, referencing the pictures has been created, it can easily be exchanged among any number of users via email and subsequently viewed (e.g., as a web page) using any of a number of web browsers. Alternatively, the HTML file itself can be made available over the Internet using web server software. The HTML file essentially becomes a web page which web browser equipped users can view or download on demand.

However, even with these advanced capabilities, it remains desirable to make the user's experience with the digital camera as intuitive and "hassle-free" as possible. The objective is to provide the advanced capabilities afforded by a digital camera while retaining the simplicity and straight forwardness of conventional point and shoot cameras.

Consequently, there is a problem in providing sophisticated capabilities and features to the user while still retaining a simple straight forward method of operation. For example, to create and electronically distribute a document and pictures from a digital camera, a user needs to first capture the image (e.g., take the picture), and then transfer the image to a personal computer. One method involves transferring a removable storage element (e.g., a flash disk) from the digital camera to a corresponding input peripheral device (flash disk attachment) coupled to the personal computer. Another method involves tethering the camera to the computer and transferring the file to the computer using a specialized software application. The user can then manipulate the image using a separate image editing software tool, or use any image editing features included in the specialized software application. The user then imports the image into a document editing application. If the resulting document is to be in HTML format, an HTML publishing application would typically be used. There, the user formats the document by, for example, annotating the image with, for example, descriptive text, and including any other patentee information. The image is placed on the "page" with respect to the descriptive text (e.g., title, subheadings, etc.). The resulting document is saved in HTML format.

Thus, in order to create an HTML file including images taken with the digital camera, in addition to taking the picture, the user is currently required to know how to transfer the picture to the PC, import the image into an image editing application, import the image into an HTML publishing application, and format an HTML file. As the information must be entered while using the HTML publishing application, as opposed to when the pictures are taken, the user needs to remember the relevant details about each picture or have previously taken notes regarding the pictures elsewhere. In addition to all of the above, the user is also required to have the requisite skills in operating the image editing application, and operating the HTML publishing application.

Hence, what is needed is an inexpensive method and system for capturing images and generating a formatted electronic document which references those images. The document should be readily interchangeable among users using a variety of computer implemented methods, such as, for example, email, LANs/WANs (local area networks/wide area networks), or the Internet. The process of creating the formatted document including the image should be intuitive and user friendly. The present invention provides a novel solution to the above requirements.

SUMMARY OF THE INVENTION

The present invention provides an inexpensive method and system for capturing images and generating a formatted electronic document which includes those images. The document is readily interchangeable among users using a variety of computer implemented methods, such as, for example, email, LAN/WANs, or the Internet. The present invention provides a process of creating the formatted document including the image which is intuitive and user friendly.

In one embodiment, the present invention comprises a method and system for generating a page description file, such as HTML (hypertext markup language) that references images captured by a digital camera. A script, comprised of computer readable instructions, is provided to the digital camera. The script is interpreted by the camera such that the camera sequences though a series of actions, such as for example, prompting the user to take a picture, prompting the user to enter any descriptive information regarding a picture, and the like. The script also includes a set of predefined instructions and formatting commands which are adapted to create a formatted web page (e.g., HTML file) in accordance with a certain desired appearance. This set of instructions and commands are referred to as a "model". The creator of the script develops the model in accordance with the particular requirements to which the script is designed.

The digital camera executes the script to display interactive instructions on the camera's display that prompt a user to perform specific operations. In response to the user performing the specific operations, the digital camera automatically updates the interactive instructions, such that the user is guided through a series of steps, such as, for example, taking a series of related image captures and annotating them. The digital camera then generates an HTML file referencing the resulting images, wherein the HTML file is formatted in accordance with the script's predefined model.

In so doing, the present invention allows a user having no knowledge of HTML to produce HTML and image files which describe one or more web pages including the resulting images. The web pages are viewable through the use of any of a number of widely used web browsers. In addition, the present invention allows the user to annotate and enter descriptive information regarding the images at the time they are captured, rather than having to first transfer the captured images to a PC or enter notes elsewhere.

The HTML file can then be downloaded from the digital camera using, for example, a removable storage device (flash disk, PC Card, etc.). Alternatively, in another embodiment, the HTML file can be made directly available over the Internet through the use of a web server hosted by the digital camera itself.

BRIEF DESCRIPTION OF THE DRAWINGS

The present invention is illustrated by way of example and not by way of limitation, in the figures of the accompanying drawings in which like reference numerals refer to similar elements and in which:

FIG. **1** shows a block diagram of a digital camera for use in accordance with the present invention.

FIG. **2** shows a block diagram of an imaging device in accordance with one preferred embodiment of the present invention.

FIG. **3** shows a block diagram of a computer in accordance with one preferred embodiment of the present invention.

FIG. **4** shows a memory map of a DRAM in accordance with one embodiment of the present invention.

FIG. **5**A shows a top view diagram depicting the preferred hardware components of the camera from FIG. **1**.

FIG. **5**B shows a back view diagram depicting the preferred hardware components of the camera from FIG. **1**.

FIG. **6**A shows a diagram of a first directed image capture screen in accordance with one embodiment of the present invention.

FIG. **6**B shows a diagram of a second directed image capture screen in accordance with one embodiment of the present invention.

FIG. **7** shows a block diagram illustrating the contents of a ROM and DRAM of a the camera from FIG. **1**.

FIG. **8** is a flow chart illustrating an exemplary process of installing and running a script in accordance with one embodiment of the present invention.

FIG. **9** shows a web page as described by an HTML file created by a script in accordance with one embodiment of the present invention.

FIG. **10** shows a diagram of a digital camera of the present invention coupled to the Internet via an ISP and a dial-up connection.

FIG. **11** shows a diagram of the connectivity and application software of the camera from FIG. **10** is shown.

DETAILED DESCRIPTION OF THE INVENTION

In the following detailed description of the present invention, numerous specific details are set forth in order to enable one of ordinary skill in the art to make and use the invention and is provided in the context of a patent application and its requirements. Although the present invention will be described in the context of a digital camera, various modifications to the preferred embodiment will be readily apparent to those skilled in the art and the generic principles herein may be applied to other embodiments. That is, any image capture device which displays or prints images, icons and/or other items, could incorporate the features described hereinbelow and that device would be within the spirit and scope of the present invention. Thus, the present invention is not intended to be limited to the embodiment shown but is to be accorded the widest scope consistent with the principles and features described herein.

The present invention provides an inexpensive method and system for capturing images and generating a formatted electronic document which includes or references those images. The document is readily interchangeable among users using a variety of computer implemented methods, such as, for example, email, LAN/WAN, or the Internet. The present invention also provides a process of creating the formatted document including the image which is intuitive and user friendly. In addition, the present invention includes a method and system for inexpensively making the formatted document available via the Internet to web browser equipped users. The present invention and its advantages are further described below.

Referring now to FIG. **1**, a block diagram of a digital camera **110** is shown for use in accordance with the present invention. Camera **110** preferably comprises an imaging device **114**, a system bus **116** and a computer **118**. Imaging device **114** is optically coupled to an object **112** and electrically coupled via system bus **116** to computer **118**. Once a photographer has focused imaging device **114** on object **112** and, using a capture button or some other means, instructed camera **110** to capture an image of object **112**, computer **118** commands imaging device **114** via system bus **116** to capture raw image data representing object **112**. The captured raw image data is transferred over system bus **116** to computer **118** which performs various image processing functions on the image data before storing it in its internal memory. System bus **116** also passes various status and control signals between imaging device **114** and computer **118**.

Referring now to FIG. **2**, a block diagram of one preferred embodiment of imaging device **114** is shown. Imaging device **114** typically comprises a lens **220** having an iris, a filter **222**, an image sensor **224**, a timing generator **226**, an

analog signal processor (ASP) **228**, an analog-to-digital (A/D) converter **230**, an interface **232**, and one or more motors **234**.

In operation, imaging device **114** captures an image of object **112** via reflected light impacting image sensor **224** along optical path **236**. Image sensor **224**, which is typically a charged coupled device (CCD), responsively generates a set of raw image data in CCD format representing the captured image **112**. The raw image data is then routed through ASP **228**, A/D converter **230** and interface **232**. Interface **232** has outputs for controlling ASP **228**, motors **234** and timing generator **226**. From interface **232**, the raw image data passes over system bus **116** to computer **118**.

Referring now to FIG. **3**, a block diagram of one preferred embodiment for computer **118** is shown. System bus **116** provides connection paths between imaging device **114**, an optional power manager **342**, central processing unit (CPU) **344**, dynamic random-access memory (DRAM) **346**, input/output interface (I/O) **348**, non-volatile memory **350**, and buffers/connector **352**. Removable memory **354** connects to system bus **116** via buffers/connector **352**. Alternately, camera **110** may be implemented without removable memory **354** or buffers/connector **352**.

Power manager **342** communicates via line **366** with power supply **356** and coordinates power management operations for camera **110**. CPU **344** typically includes a conventional processor device for controlling the operation of camera **110**. In the preferred embodiment, CPU **344** is capable of concurrently running multiple software routines to control the various processes of camera **110** within a multithreaded environment. DRAM **346** is a contiguous block of dynamic memory which may be selectively allocated to various storage functions. LCD controller **390** accesses DRAM **346** and transfers processed image data to LCD screen **402** for display.

I/O **348** is an interface device allowing communications to and from computer. For example, I/O **348** permits an external host computer (not shown) to connect to and communicate with computer **118**. I/O **348** also interfaces with a plurality of buttons and/or dials **404**, and an optional status LCD **406**, which in addition to the LCD screen **402**, are the hardware elements of the camera's user interface **408**.

Non-volatile memory **350**, which may typically comprise a conventional read-only memory or flash memory, stores a set of computer-readable program instructions to control the operation of camera **110**. Removable memory **354** serves as an additional image data storage area and is preferably a non-volatile device, readily removable and replaceable by a camera **110** user via buffers/connector **352**. Thus, a user who possesses several removable memories **354** may replace a full removable memory **354** with an empty removable memory **354** to effectively expand the picture-taking capacity of camera **110**. In the preferred embodiment of the present invention, removable memory **354** is typically implemented using a flash disk. Power supply **356** supplies operating power to the various components of camera **110**. In the preferred embodiment, power supply **356** provides operating power to a main power bus **362** and also to a secondary power bus **364**. The main power bus **362** provides power to imaging device **114**, I/O **348**, non-volatile memory **350** and removable memory **354**. The secondary power bus **364** provides power to power manager **342**, CPU **344** and DRAM **346**.

Power supply **356** is connected to main batteries **358** and also to backup batteries **360**. In the preferred embodiment, a camera **110** user may also connect power supply **356** to an external power source. During normal operation of power supply **356**, the main batteries **358** provide operating power to power supply **356** which then provides the operating power to camera **110** via both main power bus **362** and secondary power bus **364**. During a power failure mode in which the main batteries **358** have failed (when their output voltage has fallen below a minimum operational voltage level) the backup batteries **360** provide operating power to power supply **356** which then provides the operating power only to the secondary power bus **364** of camera **110**.

Referring now to FIG. **4**, a memory diagram showing one embodiment of dynamic random-access-memory (DRAM) **346** is shown. In the preferred embodiment, DRAM **346** includes RAM disk **532**, a system area **534**, and working memory **530**.

RAM disk **532** is a memory area used for storing raw and compressed image data and typically is organized in a "sectored" format similar to that of conventional hard disk drives. In the preferred embodiment, RAM disk **532** uses a well-known and standardized file system to permit external host computer systems, via I/O **348**, to readily recognize and access the data stored on RAM disk **532**. System area **534** typically stores data regarding system errors (for example, why a system shutdown occurred) for use by CPU **344** upon a restart of computer **118**.

Working memory **530** includes various stacks, data structures and variables used by CPU **344** while executing the software routines used within computer **118**. Working memory **530** also includes several input buffers **538** for temporarily storing sets of raw image data received from imaging device **114**, and a frame buffer **536** for storing data for display on the LCD screen **402**. In a preferred embodiment, each input buffer **538** and the frame buffer **536** are split into two separate buffers (shown by the dashed lines) to improve the display speed of the digital camera and to prevent the tearing of the image in the display **402**.

FIGS. **5**A and **5**B are diagrams depicting the preferred hardware components of the camera's **110** user interface **408**. FIG. **5**A is back view of the camera **110** showing the LCD screen **402**, a four-way navigation control button **409**, an overlay button **412**, a menu button **414**, and a set of programmable soft keys **416**. FIG. **5**B is a top view of the camera **110** showing a shutter button **418**, and a mode dial **420**. The camera may optionally include status LCD **406**, status LCD scroll and select buttons **422** and **424**, a sound record button **426**, and zoom-in, zoom-out buttons **426***a* and **426***b*.

The digital camera of the present invention is controlled by graphical-user-interface (GUI) based operating system (OS), which is in contrast to conventional digital cameras that are controlled by proprietary hardware architectures. In the preferred embodiment of the present invention, the OS provides the digital camera with several different operating modes for supporting various camera functions. Although the digital camera may include several different operating modes, the modes relevant to this description are capture mode, and play mode.

In capture mode, the camera **110** supports the actions of preparing to capture an image, and capturing an image through the use of either the LCD screen **402** alone or the status LCD **406** with the aid of an optional optical viewfinder (not shown). In review mode, the camera **110** supports the actions of reviewing camera contents, editing and sorting images, and printing and transferring images. In play mode, the camera **110** allows the user to view screen-sized images

in the LCD screen **402** in the orientation that the image was captured. Play mode also allows the user to hear recorded sound associated to a displayed image, and to play back sequential groupings of images, which may comprise time lapse, slide show, and burst image images. The user preferably switches between the capture, review, and play modes, using the mode dial **420**. When the camera is placed into a particular mode, that mode's default screen appears in the LCD screen **402** in which a set of mode-specific items, such as images, icons, and text, are displayed.

The present invention provides an inexpensive method and system for capturing images and generating a formatted electronic document which includes those images. The document is readily interchangeable among users using a variety of computer implemented methods, such as, for example, email, LAN/WAN, or the Internet. The present invention provides a process of creating the formatted document including the image which is intuitive and user friendly. The document can be created in any of a number of formats. Such formats include, for example, HTML format, Postscript format, Acrobat format, and the like.

In one embodiment, the present invention comprises a method and system wherein camera **110** automatically generates a formatted HTML file referencing images captured by the user. This is accomplished through the use of a script. As used herein, a script is an interpreted program written with text-based commands. A script may also be written using other interpreted languages, such as BASIC and LISP, for example. A script in accordance with the present invention also includes a predefined set of commands which determine the formatted appearance of a web page. The script is interpreted by camera **110**, which performs the actions, steps, functions, and the like, as dictated by the script. The predefined set of commands which determine the formatted appearance of a web page are referred to as a model. The model is designed (e.g., by the user, a third party developer, or the like) to give the resulting web page its distinctive appearance.

For example, in one embodiment, a script can be created that sequentially directs the user to select from a set of previously captured images stored within camera **110**, enter annotations regarding each image, and automatically format an HTML file in accordance with a predefined model. Alternatively, in another embodiment, a script can be created that directs the user to take a series of images, enter annotations for the images, and automatically format an HTML file in accordance with the predefined model. In both cases, the HTML commands which determine the appearance, hereafter referred to as the format, of the resulting web page are generated by the script in accordance with the predefined model.

In the embodiment where the script includes a directed image capture sequence, the directed image capture sequence provides a series of instructions which prompts and directs the user through a sequence actions, such as, for example, taking a picture, promoting the user for any descriptive information regarding the picture, prompting the user for annotations, and the like. Camera **110** executes the directed image capture sequence, and typically displays interactive instructions on LCD screen **402** that guide the user through the scripted sequence. Camera **110** keeps track of the user's progress through the scripted sequence and automatically updates the interactive instructions, such that the user is guided through a series of related image captures to obtain a series of resulting images. The model functions as a "blue print" which describes the appearance and logical structure of the resulting web page described by the HTML file. As the images are captured and text information entered, the images and text are tagged with HTML commands in accordance with the model.

In executing a script in accordance with the present invention, camera **110** generates an HTML file including the resulting images, wherein the HTML file is formatted in accordance with the script's predefined model. The model defines the formatting and positioning information which determine the overall appearance of the web page. For example, with a directed image capture script, as the directed image capture sequence "steps" the user through a series of image captures, the script automatically formats the descriptive information or annotations entered by the user in accordance with the model so that they appear in a desired manner in with respect to the corresponding picture (for example, specifying that the title of the image be centered above the picture and in a relatively large font, while the annotations are justified below the picture in a smaller font). Thus, once the user has progressed though and completed a given directed image capture sequence, camera **110** has generated the corresponding formatted HTML file.

In the embodiment where the script does not include a directed image capture sequence, the script functions in a substantially similar manner, except that the user is not prompted to take pictures. Rather, the user could be prompted to select pictures from a set stored in the memory of the camera, stored on removable media, or stored elsewhere. As the particular pictures are selected, the script prompts and directs the user for any descriptive information, annotations, and the like, in the same manner as the script including the directed image capture sequence.

In both embodiments, camera **110** allows a user to produce a completed, formatted, HTML file (e.g., one or more web pages) which references the resulting images from the digital camera, without requiring the user to have any knowledge of HTML or HTML formatting. In addition, the present invention allows the user to annotate and enter descriptive information regarding the images at the time they are captured, rather than having to first transfer the captured images to a PC or enter notes elsewhere.

Although the embodiment of the present invention described herein and below generates a formatted HTML file, it should be appreciated that the images and information entered by the user can be formatted in accordance with other well known graphics, document, or interchange formatting standards (e.g., Postscript, Acrobat, etc.). Generating formatted HTML files provides the advantage of relatively widespread interchangability due to the ubiquity of web browsers and the World Wide Web. In addition, it should be appreciated that a script in accordance with the present invention is not required to include a directed image capture sequence, although the scripts of the embodiments described below include directed image capture sequences. The scripts of the present invention and their operation are further described below.

Referring now to FIGS. **6**A and **6**B, diagrams illustrating example directed image capture screens are shown. FIGS. **6**A and **6**B show LCD screen **402**, four way navigation control button **409**, overlay button **413** and menu button **415**. User interaction with the GUI based operating system of camera **110** is via implemented, in part, through the use of dynamic overlay bars **430** and **432**. Overlay bars **430** and **432** are used to provide the user with various status information of the camera and provide various instructions for using the camera, including interactive instructions associated with a script, or more particularly, a script including a

directed image capture sequence. The information or instructions displayed by overlay bars **430** and **432** is typically specific to the particular operating mode of camera **110**. Overlay bars **430** and **432** are located on LCD **402** so as not to obscure any image or object currently being viewed. In accordance with the present invention, overlay bars **430** and **432** provide interactive instructions which guide the user through the directed image capture sequence and any other actions of the script.

For example, the screen shown in FIG. **6**A may pertain to an insurance-related directed image capture that prompts an insurance claims adjuster to take a series of pictures of a damaged vehicle, or it may pertain to a real estate application that guides a user through taking photos of a house for sale.

In the insurance example, once the directed image capture has started, the user may be instructed to take various views of the damaged car. The user may also be shown the number of the current image in that sequence, and the total number of images to be captured.

After the pictures of the car are taken, the script may then prompt the user to enter specific information, such as the name of the image, as shown in FIG. **6**B. The user may then enter text by choosing letters using the four-way control button **409**. For insurance purposes, the script may also request the user to input the owner's name, license plate number, claim number, and so on.

A formatted HTML file is then generated using the captured images and the entered information. The formatting is in accordance with the script's predefined model. The HTML file may then be downloaded from the camera (e.g., via removable storage media, via universal serial bus, or some other means), for example, to a PC for storage in a database, or to a web server for display as a web page.

In one embodiment of the present invention, one or more scripts (e.g., for different directed image capture sequences) may be provided in the camera as built-in functions, especially if the camera is tailored for specific industries (e.g., the insurance industry).

However, the camera may be made more flexible by implementing the scripts as a set of program instructions that are externally loaded into the camera. Once loaded in the camera **110**, the instructions comprising the scripts are then preferably executed by the GUI-based system software running on CPU **344**.

FIG. **7** is a block diagram illustrating the contents of ROM **350** where the software is stored, and DRAM **346** where the software is executed. The software **600** may include a control application **602**, a toolbox **604**, drivers **612**, a kernel **614**, and a startup/configuration module **616**. The control application **602** is the main program that controls high-level functions of the digital camera and is responsible for interfacing with functions in the toolbox **604**.

Toolbox **604** comprises selected function modules that control how the digital camera captures and manipulates images. The modules may include image processors **606**, a camera control shell **608**, and a script interpreter **610**. Image processors **606** are programs for enhancing (e.g., adjusting the contrast, sharpening, converting the image to gray-scale, etc.) the digital image received from imaging device **114**. Camera control shell **608** receives and processes data structures for controlling camera functions. Script interpreter **610** translates and executes script statements, which are used to provide the directed image capture sequences and other camera **110** features, as explained below.

Drivers **612** comprise program instructions for controlling various camera **110** hardware components, such as motor **234** (FIG. **2**) and a flash (not shown). Kernel **614** comprises program instructions providing basic underlying camera operating system services including synchronization routines, task creation, activation and deactivation routines, resource management routines, etc. Startup/configuration **616** comprises program instructions for providing initial camera **110** start-up routines such as the system boot routine and system diagnostics

When the camera **110** is first turned on and booted up, the startup/configuration **616** module begins to execute and loads the drivers **612**, the kernel **614**, the control application **602**, and system files containing configuration information into DRAM **346**. Thereafter, operation of the camera is passed to the control application **602**. In an alternative embodiment, the software **600** may executed out of ROM **350** in order to reduce the size of DRAM **346**.

The script for directed image capture sequence **618** may be loaded into the digital camera **110** from the removable memory **354** (FIG. **3**), a host computer, or a network, and stored in DRAM **346** to run in place of the control application **602**. Once loaded into the camera, the script may be selected by the user from a menu where it is displayed for selection, and is thereafter executed by the control application **602** by passing the script to the script interpreter **610**. The script interpreter **610** then translates and executes the script instructions comprising the directed image capture sequence **618** one-by-one.

As the user sequences through the script, the HTML code for the resulting file is generated. For example, as the user is prompted to take specific pictures, such as the various views of the car as described in the insurance example above, the user may also be prompted to enter descriptive information regarding each picture. The script records this information and the corresponding images along with the HTML commands in a file. As described above, the HTML commands are generated in accordance with the script's predefined model. These commands determine the appearance, or the format, of the web page described by the resulting file, and hence, the file is typically referred to as an HTML file. In one embodiment, the information, HTML commands, and references to the pictures are stored in the file incrementally, as the user sequences through the script. Alternatively, the user supplied information and references to the pictures can be stored in the file, and then the appropriate HTML commands inserted at the conclusion of the of the script. The pictures themselves are typically stored as separate associated files which are referenced by the HTML file. In either case, once the file is completed, the web page is ready to be viewed using a web browser.

As is well known, the HTML file is interpreted by a web browser, which in turn, displays a resulting web page. The commands included in the HTML file describe the logical structure of the web page. The HTML file includes ASCII text with embedded HTML tags which instruct the web browser as to the appropriate font, position, etc., for the text. The images are also associated with HTML tags describing their attributes with respect to the web page (e.g., position, relative size, etc.). The web browser interprets the HTML file and displays the web page, or pages, described by the file. Thus, the process of generating an HTML file is often referred to as generating a web page and the process of a web browser accessing and interpreting the HTML file is often referred to as displaying a web page.

FIG. **8** is a flow chart illustrating an exemplary process of installing and running a script in accordance with one embodiment of the present invention. In this embodiment,

the script includes a directed image capture sequence. The process begins by inserting the removable memory **354** in step **700**. When the removable memory **354** is installed, the removable memory **354** is mounted by the operating system **600** in step **702**. Thereafter, the operating system searches for system files on the removable memory **354**, which alert the digital camera **110** to the presence of an external program, in step **704**.

Any system files found on the removable memory **354** and corresponding directed image capture sequences **618** and associated models are then installed and made available to the user for selection via menu choices that appear on the LCD screen **402** in step **706**.

Once the list of available scripts are displayed, the user selects one of them (e.g., the script for directed image capture sequences **618**) to run in step **708**. In a preferred embodiment, the list showing the available scripts may be categorized in menus for easier selection. For example, assume a real estate agent has three different scripts for capturing images of different types of properties. The agent may name or create categories for the directed image capture sequences called "commercial", "industrial", and "residential", for instance. Selecting the residential category, for example, will cause a list of directed image captures to be displayed that are designed to capture pictures of different types of residential properties, such as one, two, and three bedroom homes. The user may then select a desired script depending on the particular house to be shot.

After the user selects a particular script to run (e.g., the script including directed image capture sequence **618**), the script interpreter **610** begins interpreting the directed image capture sequence **618** in step **710**, and control is passed from the control application **602** to the script. In step **712**, the script interpreter **610** fetches the first command comprising the directed image capture sequence **618**. The script also opens a new HTML file, in which the user entered information, HTML commands, and the like are to be stored.

It is then determined whether the fetched command is a script "WaitForShutter" command in step **714**. This command causes control of the camera **110** to pass back to the control application **602** until the user presses the shutter button **418** to capture an image. The "WaitForShutter" command is preferably called with a quoted string parameter that is used in the dynamic overly bar **430** as the prompt to the user requesting an image capture (e.g., "Take photo of kitchen", Take photo of the front of the house", etc.).

If the command is a "WaitForShutter" command in step **714**, then control is returned to the script after the user presses the shutter button **418** in step **716** to capture an image. If the fetched command is not a "WaitForShutter" command in step **714**, then the script interpreter **610** interprets and executes the command in step **718**.

In step **719**, depending upon the command interpreted in steps **714** and **718**, the script generates code in accordance with the script's predefined model. For example, if a picture is taken, depending upon the model, the picture is tagged with formatting HTML codes which describe its location on the web page. If information is entered by the user, the information (e.g., ASCII text) is similarly tagged with formatting HTML codes. Thus, one or more formatted HTML files are generated as the user progresses through the script.

The script continues to execute, with new commands being fetched from memory, until the end of the script is reached, as shown by step **720**. If it is determined if the end of the script has been reached in step **720**, control is returned to the control application **602**. If not, then the next command is fetched in step **712**, and the process continues until the end of the script is reached. Once the end of the script is reached, the one or more HTML files are closed and saved. Once control as been returned, the one or more completed, formatted HTML files are available to the user for downloading, storage, or any other use.

An exemplary portion of a script in accordance with one embodiment of the present invention is shown below:

```
# Open HTML file and write header info to it.
DisplayLine ("Writing header info")
FileOpen (2, "HOME3.HTM", 1, fileId)
WriteLine (fileId, "<html>")
WriteLine (fileId, "")
WriteLine (fileId, "<head>")
WriteLine (fileId, " <!-- To change the window title, replace the words
Christopher Realty, Inc.\" -->")
WriteLine (fileId, " <!-- below with whatever words you want to appear -->")
WriteLine (fileId, "title>Christopher Realty, Inc. </title>")
WriteLine (fileId, "</head>")
WriteLine (fileId, "")
WriteLine (fileId, "<BODY BGCOLOR= \"#FFFFCC\">")
WriteLine (fileId, "<P><IMG SRC=\"logo.gif\" WIDTH= \"468\"
HEIGHT= \"53\" ALIGN= \ "BOTTOM\ " BORDER= \ "0\"<>/P>")
#Choose property and set values accordingly
DisplayClear ()
DisplayLine ("Select the property that you wish to create a web page for")
Wait (2000)
SetOption (1, "401 Cristobal Street", 0)
SetOption (2, "958 Willowleaf Drive", 0)
SetOption (3, "2702 WindHuff Lane", 0)
GetOption (choice)
if choice == 1
    WriteLine (fileId, "<P><BR><BR><FONT SIZE= \"5\"><B>401 Cristobal
Street</B></FONT><BR>")
    WriteLine (fileId, "<TABLE BORDER=0 cellpadding=0>")
    WriteLine (fileId, "<TR>")
    footage = 2300
    acreage = "1"
```

-continued

```
    age = 12
end
ifchoice == 2
    WriteLine (fileId, "<P><BR><BR><FONT SIZE= \"5\"><B>958 Willowleaf
Drive</B></FONT><BR>")
    WriteLine (fileId, "<TABLE BORDER=0 cellpadding=0>")
    WriteLine (fileId, "<TR>")
    footage = 3500
    acreage = "¾
    age = 5
end
```

Referring now to FIG. **9**, a web page described by an HTML file created by a script of the present invention is shown. This script is for use in the real-estate industry, as its model is designed to format a web page suited for advertisement. As shown in FIG. **9**, three images are included in the HTML file, along with descriptive information. As described above, the images are located and scaled with respect to the web page in accordance with the script's predefined model. The model also automatically inserts the text entered by the user into the desired location and automatically applies formatting, such as font type and size, justification, etc. For example, the script may prompt the user for the address of the house, "958 Willowleaf Drive", and store the entered information in the resulting HTML file with its defined formatting. Thus, the user is able to create the web page as shown in FIG. **9** without having to learn or memorize any HTML formatting commands, features, etc.

In another embodiment of camera **110**, camera **110** includes the necessary software and the necessary computational resources (e.g., computer **118**) to act as a web server and host the web page defined by the HTML file itself, eliminating the requirement for the expensive personal computer. In so doing, camera **110** can make the HTML files created in accordance with the present invention directly available over the Internet, as opposed to downloading the HTML files to a separate computer system for display by that system's web server.

Referring now to FIG. **10**, a diagram **800** of camera **110** coupled to Internet **750** is shown. Diagram **800** shows camera **110** coupled to an external modem **801**. Camera **110** is coupled to modem **801** via any of several communications means (e.g., USB, IEEE1394, infrared link, etc.). Modem **801** is in turn coupled to a telephone jack **802** at the camera's location. The telephone jack **802** couples modem **801** to one of the modems **803** of an ISP (Internet service provider) **710** via the telephone company's local loop. An ISP **760** is directly coupled to the Internet **750** via a T1 line.

Modem **801** is shown as an external modem. However, the functionality of modem **810** can be implemented directly within the electronics of camera **110** (e.g., via a modem ASIC), or alternatively, can be implemented as a software only modem executing on computer **118** within camera **110**. As such, it should be appreciated that, at the hardware connectivity level, modem **801** can take several forms. For example, a wireless modem can be used in which case the camera is not connected via an external wire to any land line. Alternatively, there may even be applications in which camera **110** includes suitable electronic components enabling a connection to a conventional computer system network (e.g., ethernet, Apple talk, etc.), which is in turn, directly connected to the Internet (e.g., via a gateway, a firewall, etc.), thereby doing away with the requirement for an ISP. Hence, it should be appreciated that the present invention is not limited to any particular method of accessing the Internet **750**.

Referring now to FIG. **11**, a diagram **900** of the connectivity and application software of camera **110** is shown. At the software level, computer **118** of camera **110** hosts a TCP-IP protocol stack (including PPP (Point to Point Protocol)), which, as is well-known in the art, enables communication via the Internet. Protocol stack **901** interfaces with the physical connection hardware **902** of camera **110** and the application layer **903**. The bottom of protocol stack **901** includes communication hardware interface drivers which interfaces directly with the various communications hardware camera **110** must function with (e.g., USB, IEEE1394, etc.). The top of protocol stack **901** includes software APIs and protocol libraries which interface with web server application **910** running in an applications layer **903**. Applications layer **903** interfaces with an operating system **904**. Applications layer **903**, protocol stack **901**, and operating system **904** are instantiated as software modules in DRAM **346** of camera **110**.

The web server application **910** runs within applications layer **903**, along with other software applications which provide camera **110**'s functionality (e.g., still image downloading, motion detection, aim control for a remote aiming device, and the like). The web server application **910** responds to queries from the user's Internet web browser and other web browsers, which include user requests directed to the camera (e.g., requests for various web pages hosted by camera **110**) and communicates with other software applications within applications layer **903**. These applications each communicate with operating system **904** of the camera **110**, which controls the hardware functionality of camera **110** (e.g., taking pictures, storing pictures, and the like). HTTP requests are received and HTML files are transferred to and from the web server application **910** via protocol stack **901**, and communications hardware **902**.

Additional details regarding the hosting and display of web pages within a digital camera, and remote access there to, may be found in U.S. patent application Ser. No. 09/044,644, entitled "A method and system for hosting an Internet web site on a digital camera", which is incorporated herein by reference.

Thus, the present invention provides an inexpensive method and system for capturing images and generating a formatted electronic document which includes those images. The document is readily interchangeable among users using a variety of computer implemented methods, such as, for example, email, LAN/WANs, or the Internet. The present invention also provides a process of creating the formatted document including the image which is intuitive and user friendly. In addition, the present invention includes a method and system for inexpensively making the formatted document available via the Internet to web browser equipped users.

The foregoing descriptions of specific embodiments of the present invention have been presented for purposes of illustration and description. They are not intended to be exhaustive or to limit the invention to the precise forms disclosed, and obviously many modifications and variations are possible in light of the above teaching. The embodiments were chosen and described in order to best explain the principles of the invention and its practical application, to thereby enable others skilled in the art to best utilize the invention and various embodiments with various modifications as are suited to the particular use contemplated. It is intended that the scope of the invention be defined by the claims appended hereto and their equivalents.

What is claimed is:

1. A method for generating an Internet page description file on a hand-held digital camera that references images captured by the hand-held digital camera, wherein the hand-held digital camera includes a display, the method comprising the steps of:

a) displaying interactive instructions on the display that prompt a user to perform

b) in response to the user performing the specific operations, automatically updating the interactive instructions, such that the user is guided through a series of related image captures to obtain a series of resulting images; and

c) generating an HTML (hypertext markup language) file referencing the resulting images, wherein the HTML file is formatted in accordance with a predefined model, such that a formatted HTML file is automatically generated by the hand-held digital camera.

2. The method of claim **1** wherein step b) further includes the step of providing the interactive instructions by externally loading a script into the hand-held digital camera.

3. The method of claim **1** wherein step b) further includes the step of providing the script as a text-based script.

4. The method of claim **1** wherein step c) further includes the step of executing the script by the hand-held digital camera interpreting the text-based script.

5. The method of claim **1** wherein step d) further includes the step of prompting the user for specific information, and entering the specific information on a text entry screen.

6. The method of claim **1** further including the step of displaying the interactive instructions on a translucent overlay bar.

7. The method of claim **1** further including the steps of:

d) coupling the hand-held digital camera to the Internet; and

e) making the HTML file available via the Internet by hosting a web server application on the hand-held digital camera.

8. A method for generating an Internet page description file on a hand-held digital camera that includes a display, the method comprising the steps of:

a) allowing a user to load a script onto the hand-held digital camera, the script comprising a set of program instructions;

b) executing the script to display interactive instructions on the display that prompt a user to perform specific operations;

c) in response to the user performing the specific operations, automatically updating the interactive instructions, such that the user is guided through a series of related image captures to obtain a series of resulting images;

d) generating an internet page description file referencing the resulting images, wherein the internet page description file is formatted in accordance with a predefined model included in the script, such that a formatted internet page description file is automatically generated by the digital imaging device;

e) allowing the user to couple the hand-held digital camera to the Internet; and

f) making the internet page description file available via the Internet by hosting a web server application on a computer system within the hand-held digital camera.

9. The method of claim **8** wherein step a) further includes the step of providing the script as a text-based script.

10. The method of claim **9** wherein step b) further includes the step of executing the script by the computer system interpreting the text-based script.

11. The method of claim **10** wherein step c) further includes the step of prompting the user for specific information, and entering the specific information on a text entry screen.

12. The method of claim **11** wherein the internet page description file is a hypertext markup language file.

13. In a hand-held digital imaging device including a display, a system for generating a formatted document including text and images, comprising:

a set of program instructions which, when executed, cause the hand-held digital imaging device to perform the steps of:

a) displaying interactive instructions on the display that prompt a user to perform specific operations;

b) in response to the user performing the specific operations, automatically updating the interactive instructions, such that the user is guided through a sequence of the interactive instructions adapted to capture information from the user;

d) transferring the information captured from the user to a formatted document, wherein the formatted document is formatted in accordance with a predefined model, such that the formatted document is automatically generated by the hand-held digital imaging device.

14. The system of claim **13** wherein step a) further includes providing a sequence of interactive instructions for a directed image capture, wherein the program instructions prompt the user through a series of related image captures, resulting in a plurality of stored images.

15. The system of claim **13** wherein step a) further includes the step of providing the program instructions as a text-based script, and wherein the hand-held digital imaging device guides the user through the sequence of interactive instructions by a computer system interpreting the text-based script.

16. The system of claim **13**, wherein the predefined model comprises the set of programming instructions which determine the formatted appearance of the document.

17. The system of claim **16**, wherein the predefined model is predefined in accordance with a particular purpose of the script such that the formatted document has an appearance in accordance with the particular purpose.

18. The system of claim **13**, wherein the document is an internet page description file which defines a web page.

19. The system of claim **18**, wherein the hand-held digital imaging device is coupled to the Internet and the internet page description file is made available by a web server application executing on a computer system of the hand-held digital imaging device.

* * * * *

UNITED STATES PATENT AND TRADEMARK OFFICE

CERTIFICATE OF CO CTION

PATENT NO. : 6,223,190 B1
DATED : April 24, 2001
INVENTOR(S) : Aihara et al.

It is certified that error appears in the above-identified patent and that said Letters Patent is hereby corrected as shown below:

Column 15,
Line 20 should read -- prompt a user to perform specific operations --

Signed and Sealed this

Twenty-seventh Day of November, 2001

Attest:

Nicholas P. Godici

Attesting Officer

NICHOLAS P. GODICI
Acting Director of the United States Patent and Trademark Office

EXHIBIT 5

US006249316B1

(12) **United States Patent**
Anderson

(10) **Patent No.: US 6,249,316 B1**
(45) **Date of Patent: *Jun. 19, 2001**

(54) **METHOD AND SYSTEM FOR CREATING A TEMPORARY GROUP OF IMAGES ON A DIGITAL CAMERA**

(75) Inventor: **Eric C. Anderson**, San Jose, CA (US)

(73) Assignee: **FlashPoint Technology, Inc.**, San Jose, CA (US)

(*) Notice: This patent issued on a continued prosecution application filed under 37 CFR 1.53(d), and is subject to the twenty year patent term provisions of 35 U.S.C. 154(a)(2).

Subject to any disclaimer, the term of this patent is extended or adjusted under 35 U.S.C. 154(b) by 0 days.

(21) Appl. No.: **08/702,286**

(22) Filed: **Aug. 23, 1996**

(51) **Int. Cl.**[7] **H04N 5/225**
(52) **U.S. Cl.** **348/333.05**; 345/115
(58) **Field of Search** 348/333, 232, 348/552, 333.05; 345/338, 351, 115; 396/373, 429

(56) **References Cited**

U.S. PATENT DOCUMENTS

4,827,347	*	5/1989	Bell	348/333.05
5,020,012		5/1991	Stockberger .	
5,043,816	*	8/1991	Nakano et al.	348/333
5,237,648	*	8/1993	Mills et al.	395/133
5,414,811	*	5/1995	Parulski et al.	395/162
5,488,414	*	1/1996	Hirasawa et al.	348/207
5,633,678	*	5/1997	Parulski et al.	348/232
5,635,984	*	6/1997	Lee	348/333
5,675,358	*	10/1997	Bullock et al.	345/115
5,682,207	*	10/1997	Takeda et al.	348/568
5,706,049	*	1/1998	Moghadam et al.	348/333
5,740,267	*	4/1998	Erherer et al.	382/132
5,742,339	*	4/1998	Wakui	348/233
5,796,428	*	8/1998	Matsumoto	348/231
5,828,406		10/1998	Parulski .	
5,862,218	*	1/1999	Steinberg	348/552
5,943,050	*	8/1999	Bullock et al.	348/333.05
5,966,122	*	10/1999	Itoh	348/232

* cited by examiner

Primary Examiner—Wendy R. Garber
(74) *Attorney, Agent, or Firm*—Sawyer Law Group LLP

(57) **ABSTRACT**

A method and system for grouping a series of images stored in a digital camera. The digital camera includes a view finder for displaying a plurality of the image cells, where each of the image cells corresponds to one of the stored images. The digital camera also includes a navigation control button for positioning a highlight area around one of the plurality of image cells, and one or more function keys. The method and system includes assigning a mark function to one of the function keys, such that in response to the user pressing the assigned mark function key, the image cell currently highlighted is marked to provide a marked image. In response to the user repeating the above step, a group of marked images is created. The method and system further includes assigning at least one group function to one of the function keys, such that in response to a user pressing the assigned group function key, the group of marked images is collectively manipulated by the user.

12 Claims, 11 Drawing Sheets

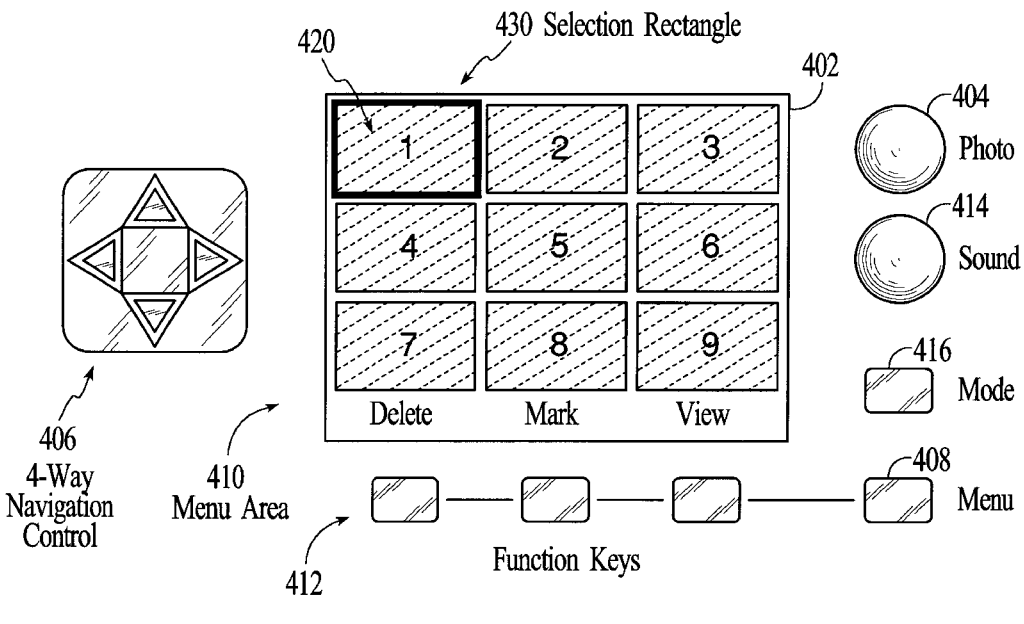

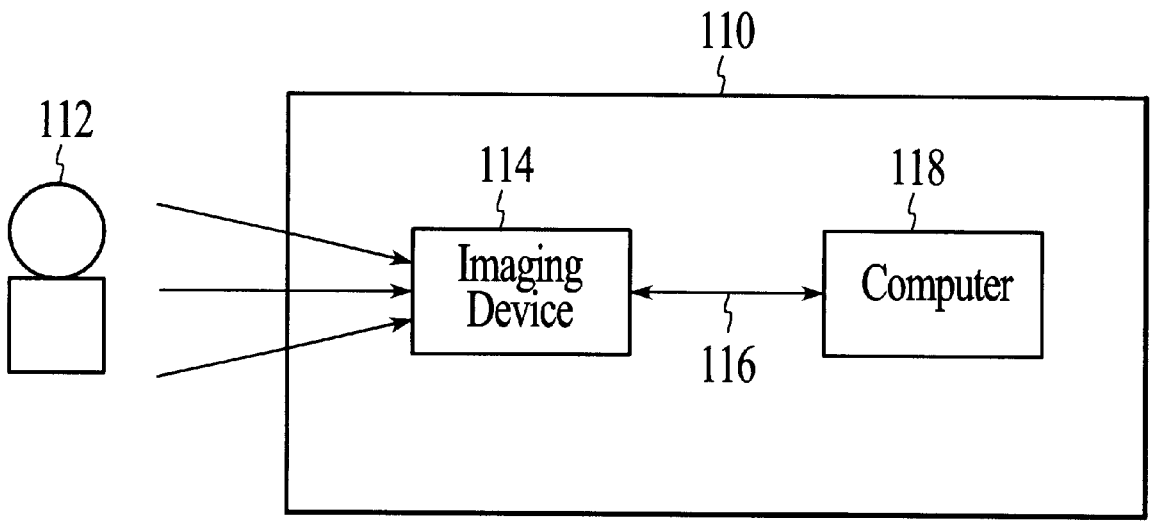

FIG. 1

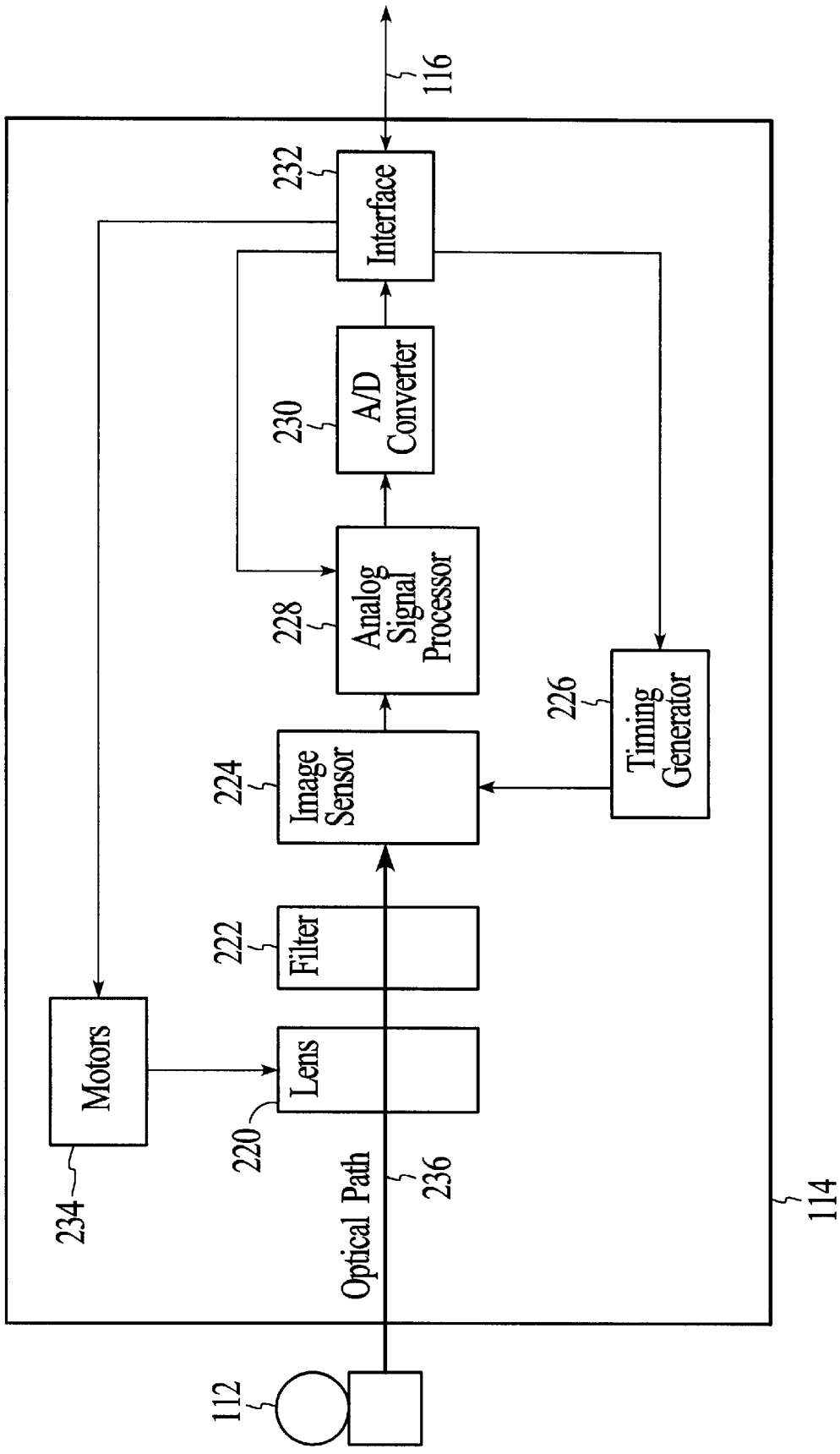
116
232
Interface
230
A/D Converter
228
Analog Signal Processor
226
Timing Generator
224
Image Sensor
222
Filter
Motors
Lens
220
234
Optical Path
236
112
114

FIG. 2

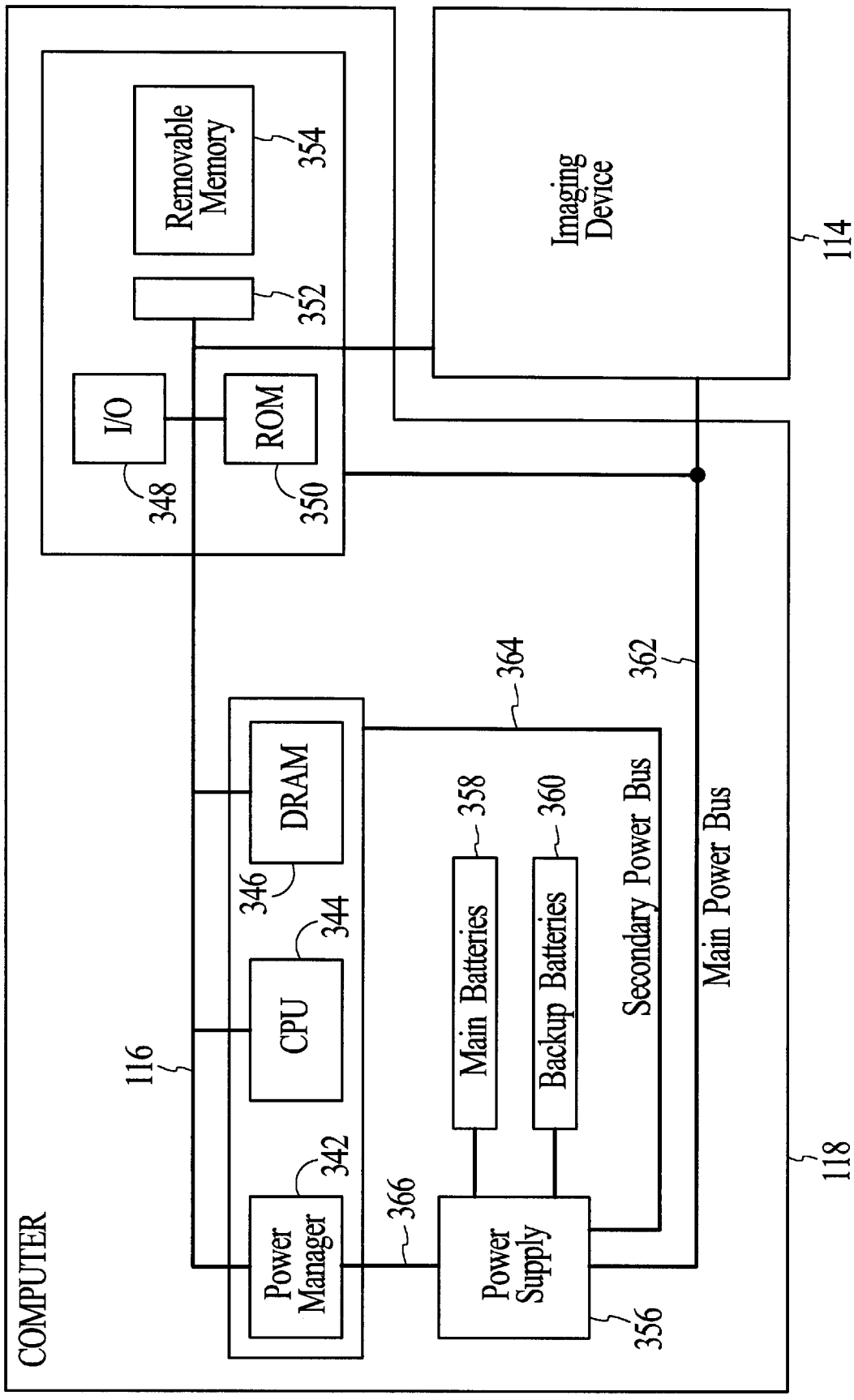
COMPUTER
116
118
Removable Memory
354
352
I/O
348
ROM
350
Imaging Device
114
DRAM
346
CPU
344
Power Manager
342
366
Main Batteries
358
Backup Batteries
360
Power Supply
356
364
362
Secondary Power Bus
Main Power Bus

FIG. 3

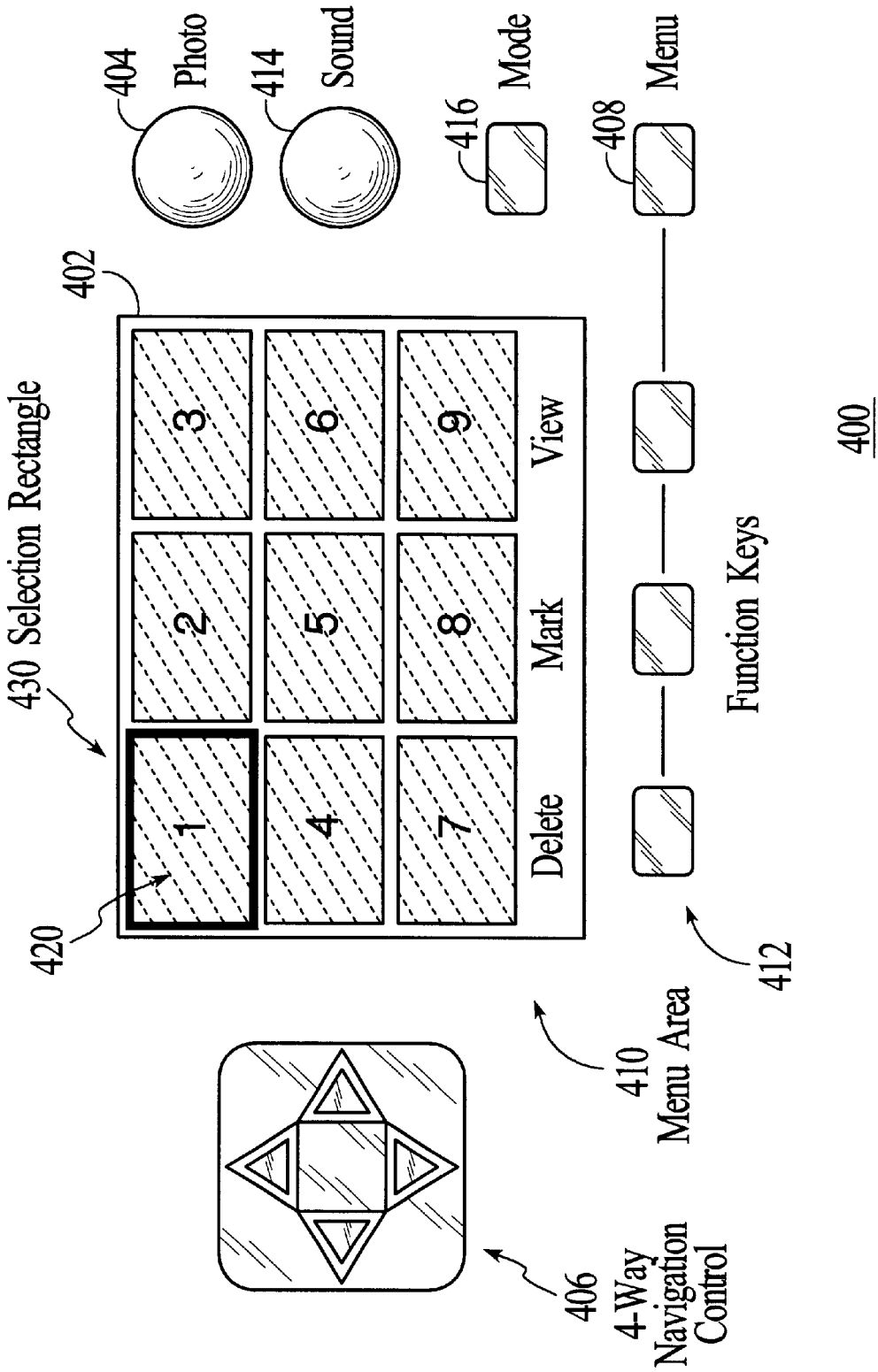
404
Photo
414
Sound
416
Mode
408
Menu
402
430 Selection Rectangle
1
2
3
4
5
6
7
8
9
Delete
Mark
View
420
Function Keys
412
410
Menu Area
406
4-Way
Navigation
Control
400

FIG. 4

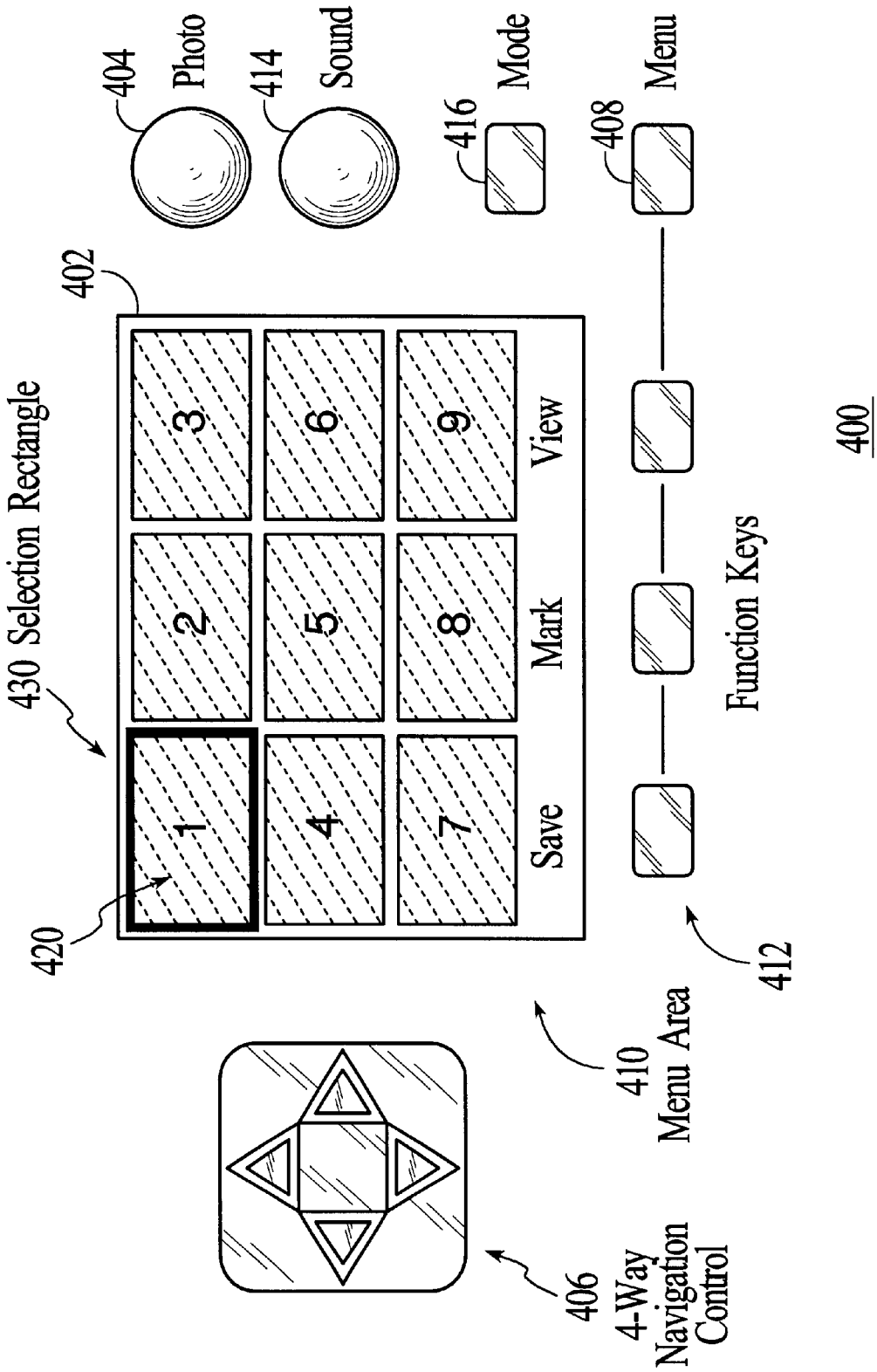
404
Photo
414
Sound
416
Mode
408
Menu
402
430 Selection Rectangle
1
2
3
4
5
6
7
8
9
Save
Mark
View
Function Keys
420
412
410
Menu Area
406
4-Way
Navigation
Control
400

FIG. 5

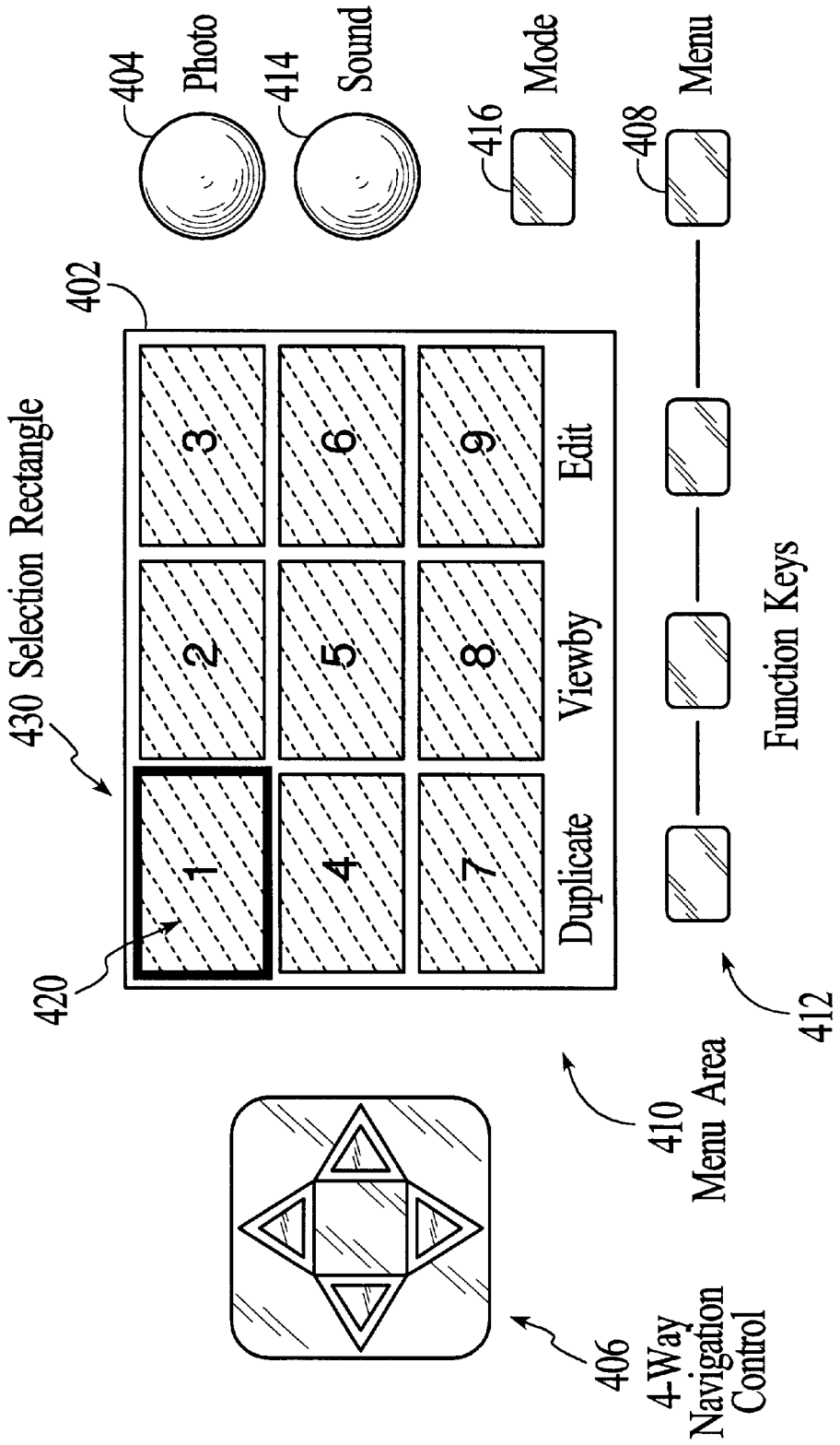
404
Photo
414
Sound
416
Mode
408
Menu
402
430 Selection Rectangle
1
2
3
4
5
6
7
8
9
Duplicate
Viewby
Edit
Function Keys
420
412
410
Menu Area
406
4-Way
Navigation
Control
400

FIG. 6

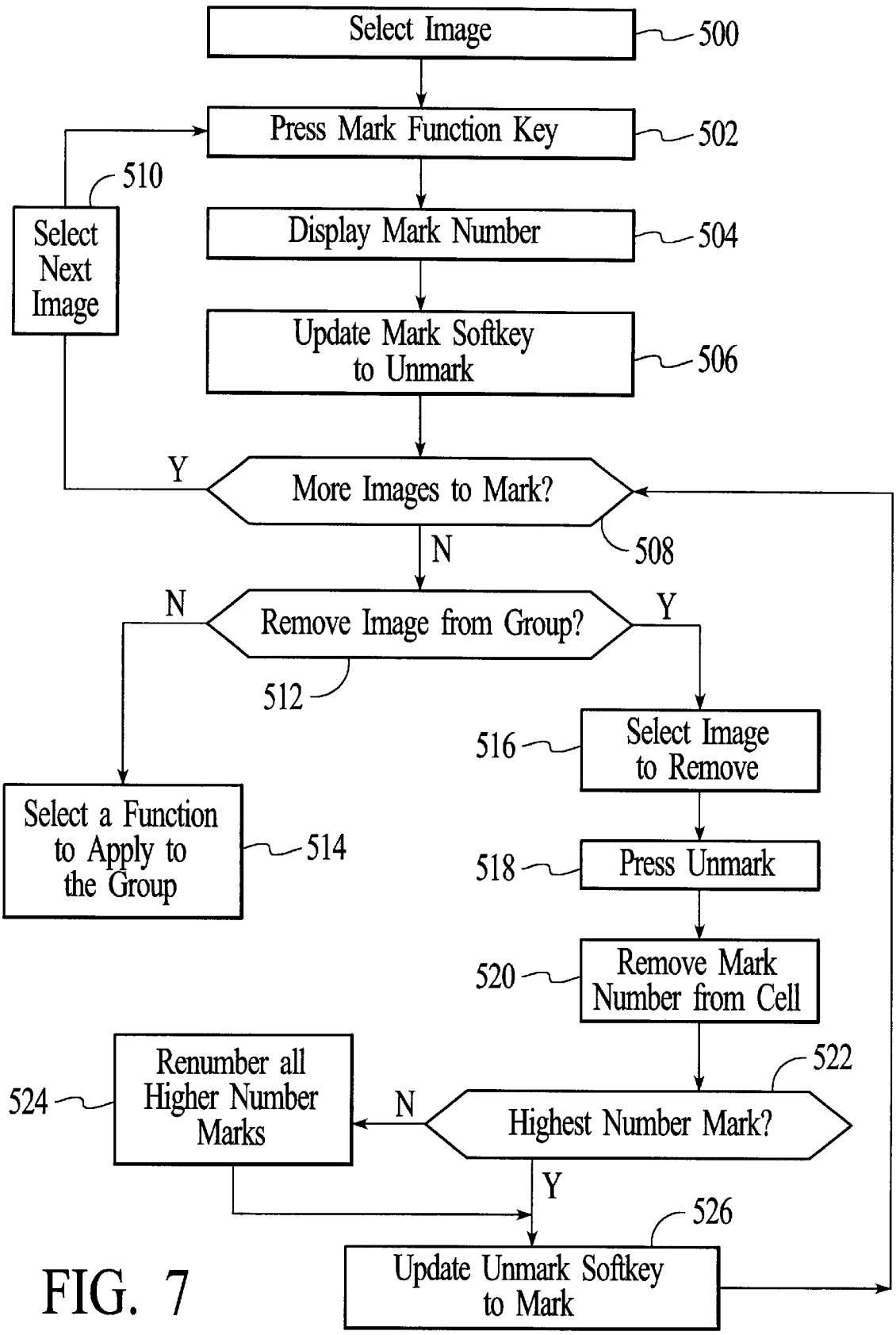
Select Image
500
Press Mark Function Key
502
Display Mark Number
504
Update Mark Softkey to Unmark
506
More Images to Mark?
508
Y
N
Remove Image from Group?
512
N
Y
Select a Function to Apply to the Group
514
Select Image to Remove
516
Press Unmark
518
Remove Mark Number from Cell
520
Highest Number Mark?
522
N
Y
Renumber all Higher Number Marks
524
Update Unmark Softkey to Mark
526
Select Next Image
510

FIG. 7

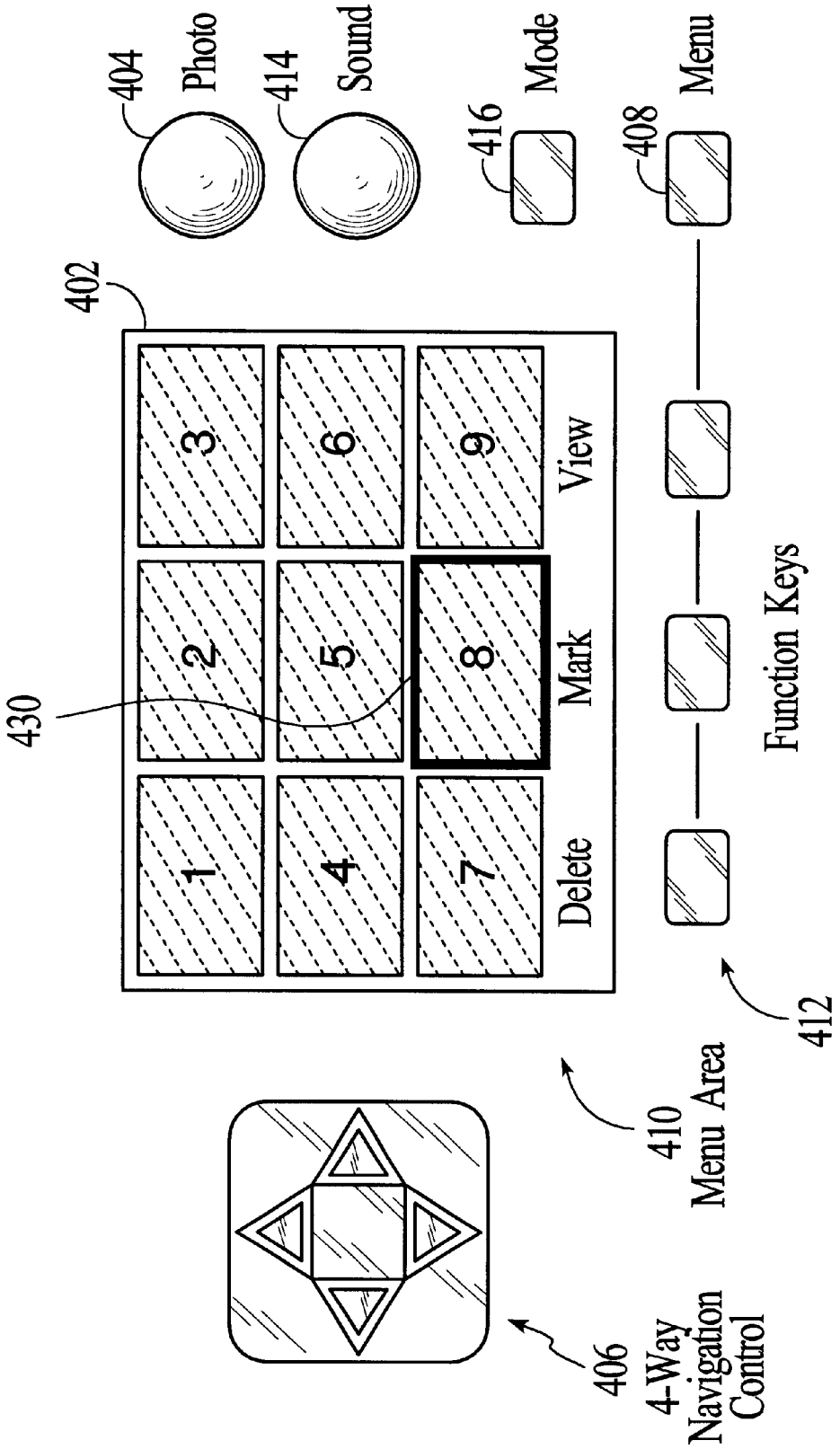
404
Photo
414
Sound
416
Mode
408
Menu
402
430
1
2
3
4
5
6
7
8
9
Delete
Mark
View
Function Keys
412
410
Menu Area
406
4-Way
Navigation
Control
400

FIG. 8

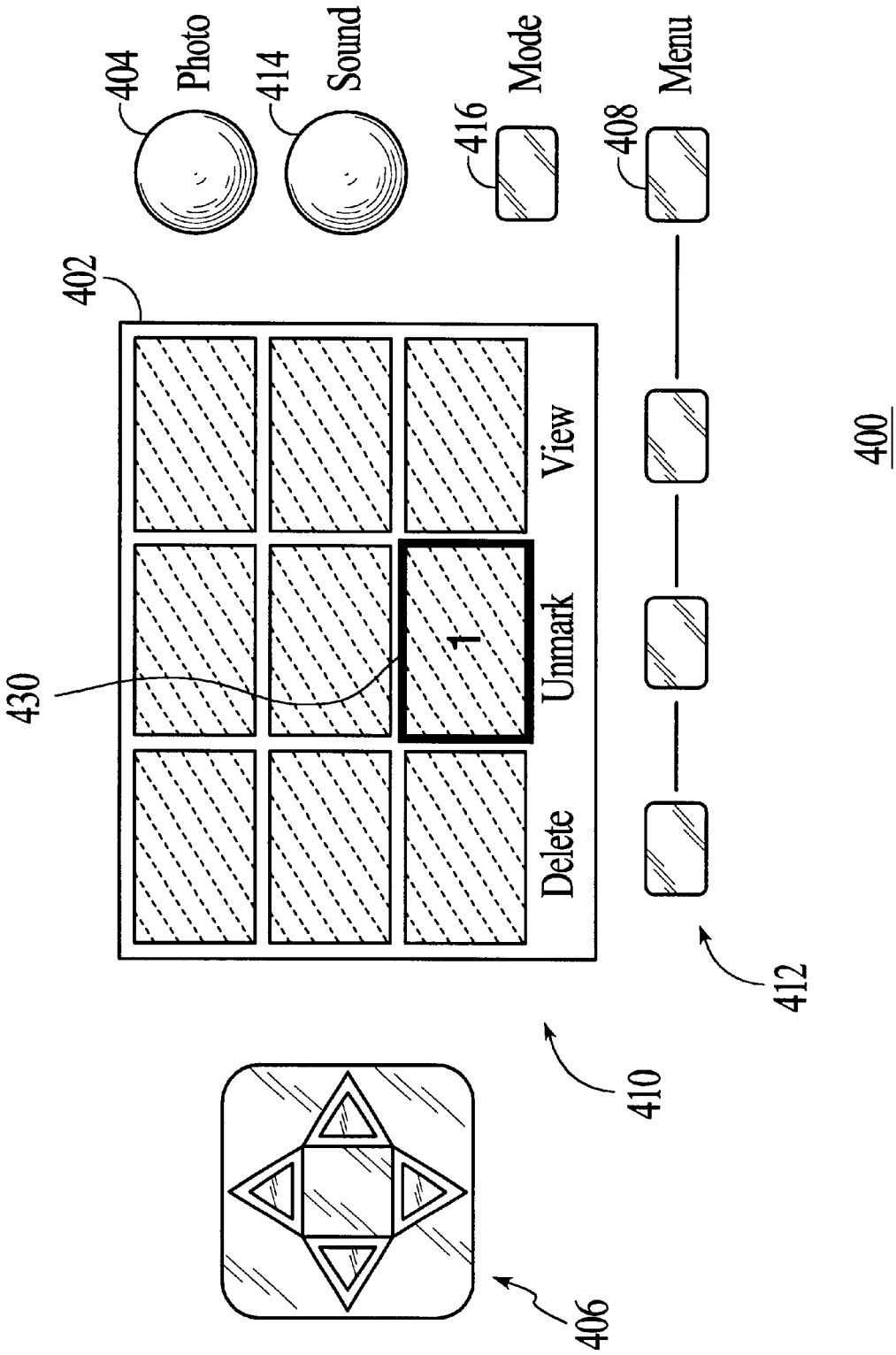
404
Photo
414
Sound
416
Mode
408
Menu
402
View
Unmark
1
Delete
430
400
412
410
406

FIG. 9

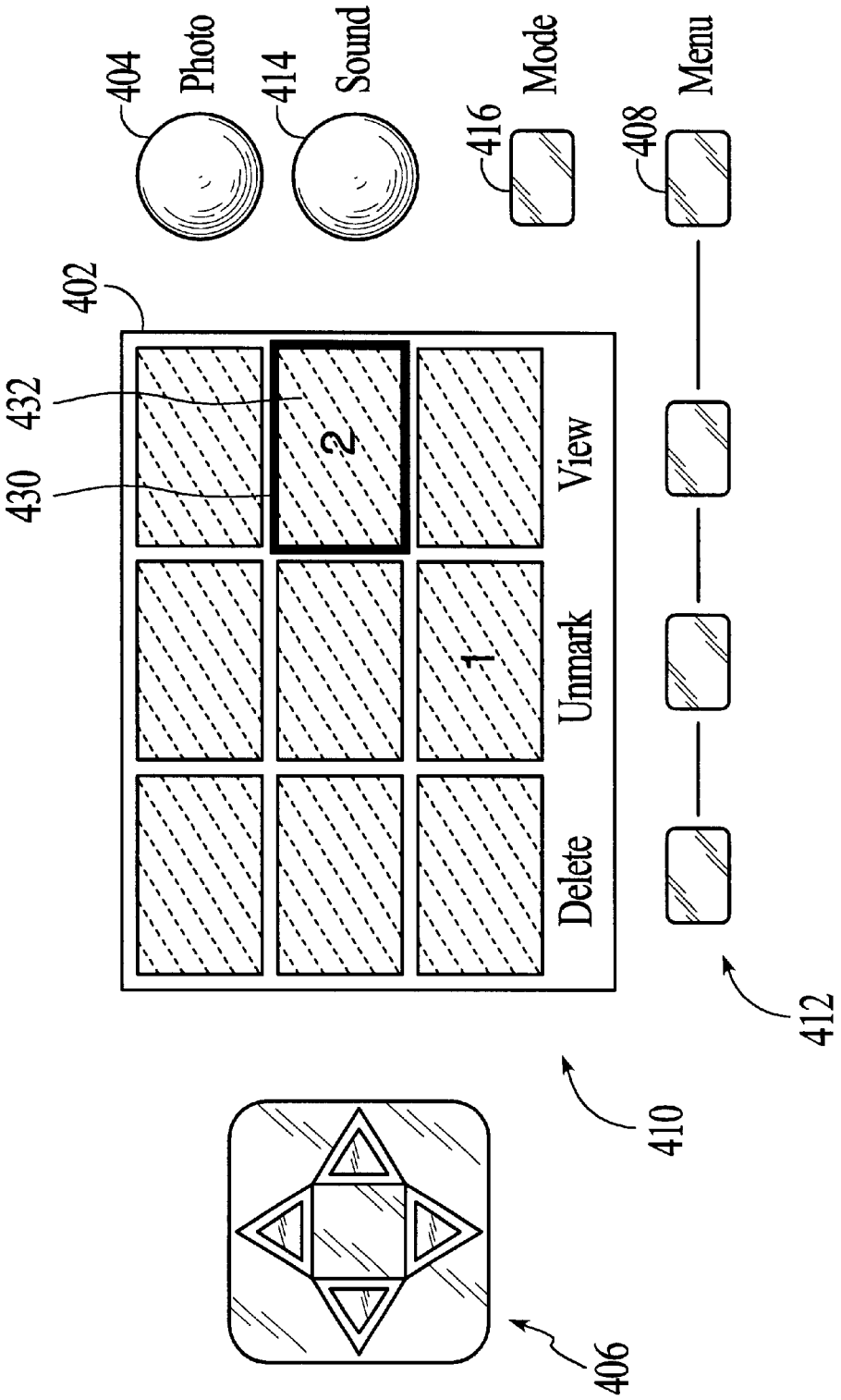
404
Photo
414
Sound
416
Mode
408
Menu
402
432
430
2
1
View
Unmark
Delete
400
412
410
406

FIG. 10

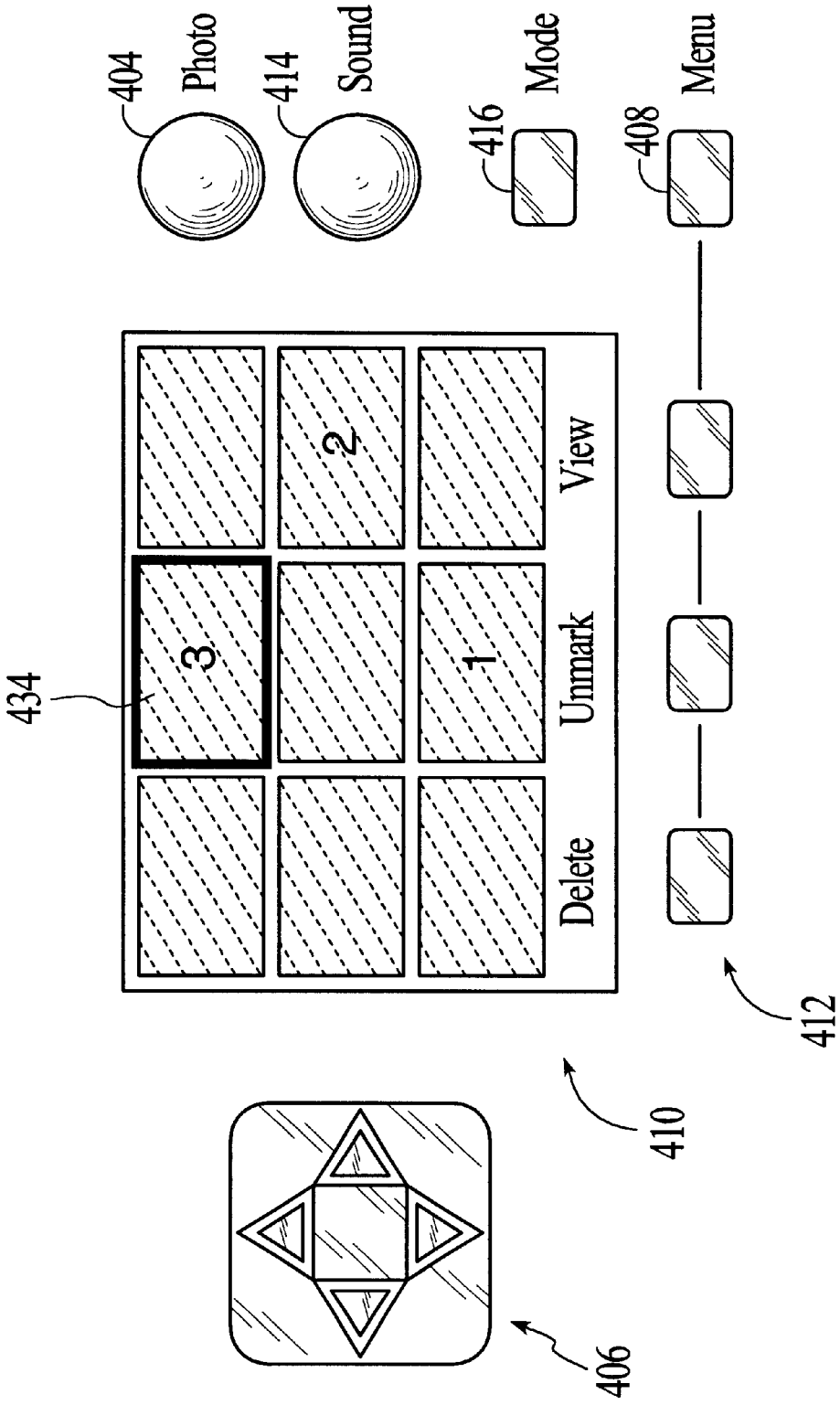
404
Photo
414
Sound
416
Mode
408
Menu
434
3
2
1
View
Unmark
Delete
400
412
410
406

FIG. 11

METHOD AND SYSTEM FOR CREATING A TEMPORARY GROUP OF IMAGES ON A DIGITAL CAMERA

FIELD OF THE INVENTION

The present invention relates generally to digital cameras, and more particularly to a method and system for grouping images in a digital camera.

BACKGROUND OF THE INVENTION

Modern digital cameras typically include an imaging device which is controlled by a computer system. The computer system accesses raw image data captured by the imaging device and then processes and compresses the data before storing the compressed data into an internal memory. Efficient operation of the computer is therefore an important consideration for camera designers and manufacturers. The memory architecture of a particular computer system determines data storage techniques and can thus significantly effect the operational efficiency of the entire digital camera system.

Due to architectural limitations of conventional digital cameras, there are several drawbacks in the user interface that restrict how captured images are manipulated by a user. The user interface in conventional digital cameras typically includes a view finder in which small versions of the captured images may be displayed to allow a user to review several images at once. By selecting one of the images, the user may then display the full-sized version of the images in the view finder.

Some digital cameras have a type of automatic mode that displays the full-sized versions of the captured images at some factory predetermined rate starting with the first image and ending with the last image. Another type of automatic mode allows the user to select the starting image in the playback sequence, rather than automatically starting with the first image that was captured.

The drawback with these types of automatic modes is that once playback begins, the images can only be displayed in the sequence in which they were taken. Therefore, the user cannot fully control the sequence that individual images are displayed, or randomly select a set of images to display.

Digital cameras that are not equipped with automatic mode require manual intervention by the user to display the captured images. That is, not only is the user forced to view images in a predetermined sequence, but after one image is displayed, the user must manually depress a button on the camera that triggers the display of the next image, depress the button again to display the next image, and so on for the entire sequence of images.

Manual intervention by the user is also necessary when performing other operations on the captured images, such a deleting images from the digital camera. Forcing users to manually select individual images for each operation desired can be cumbersome and tedious to the user.

Accordingly, what is needed is an improved system and method for manipulating and grouping captured images in a digital camera. The present invention addresses such a need.

SUMMARY OF THE INVENTION

The present invention provides method and system for grouping a series of images stored in a digital camera. The digital camera includes a view finder for displaying a plurality of the image cells, where each of the image cells corresponds to one of the stored images. The digital camera also includes a navigation control button for positioning a highlight area around one of the plurality of image cells, and one or more function keys. The method and system includes assigning a mark function to one of the function keys, such that in response to the user pressing the assigned mark function key, the image cell currently highlighted is marked to provide a marked image. In response to the user repeating the above step, a group of marked images is created. The method and system further includes assigning at least one group function to one of the function keys, such that in response to a user pressing the assigned group function key, the temporary group of marked images is collectively manipulated by the user.

According, to the system and method disclosed herein, a user may view and manipulate randomly selected images as a group without manual intervention, thereby increasing the ease of use and operation of the digital camera.

BRIEF DESCRIPTION OF THE DRAWINGS

FIG. **1** is a block diagram of a digital camera that operates in accordance with the present invention.

FIG. **2** is a block diagram of the preferred embodiment for the imaging device of FIG. **1**.

FIG. **3** is a block diagram of the preferred embodiment for the computer of FIG. **1**.

FIG. **4** is a diagram depicting a user interface for a digital camera that operates in accordance with the present invention.

FIGS. **5** and **6** are diagrams illustrating additional softkey menu levels that are displayed in the view finder of the camera interface.

FIG. **7** is flow chart depicting the process for grouping images that are stored in a digital camera in accordance with the present invention.

FIGS. **8–11** are diagrams illustrating the user interface as the user groups images in the digital camera in accordance with the present invention.

DESCRIPTION OF THE INVENTION

The present invention relates to an improvement in manipulating images in a digital camera. The following description is presented to enable one of ordinary skill in the art to make and use the invention and is provided in the context of a patent application and its requirements. Various modifications to the preferred embodiment will be readily apparent to those skilled in the art and the generic principles herein may be applied to other embodiments. Thus, the present invention is not intended to be limited to the embodiment shown but is to be accorded the widest scope consistent with the principles and features described herein.

The present invention is a digital camera that includes a method and system for grouping a series of stored images. From the group of images, a user may then automatically display the images in the group, save the images in the group, or delete all of the images in the group at once, without manual intervention.

Referring now to FIG. **1**, a block diagram of a camera **110** is shown according to the present invention. Camera **110** preferably comprises an imaging device **114**, a system bus **116** and a computer **118**. Imaging device **114** is optically coupled to an object **112** and electrically coupled via system bus **116** to computer **118**. Once a photographer has focused imaging device **114** on object **112** and, using a capture button or some other means, instructed camera **110** to capture an image of object **112**, computer **118** commands

imaging device **114** via system bus **116** to capture raw image data representing object **112**. The captured raw image data is transferred over system bus **116** to computer **118** which performs various image processing functions on the image data before storing it in its internal memory. System bus **116** also passes various status and control signals between imaging device **114** and computer **118**.

Referring now to FIG. **2**, a block diagram of the preferred embodiment of imaging device **114** is shown. Imaging device **114** preferably comprises a lens **220** having an iris, a filter **222**, an image sensor **224**, a timing generator **226**, an analog signal processor (ASP) **228**, an analog-to-digital (A/D) converter **230**, an interface **232**, and one or more motors **234**.

In operation, imaging device **114** captures an image of object **112** via reflected light impacting image sensor **224** along optical path **236**. Image sensor **224** responsively generates a set of raw image data representing the captured image **112**. The raw image data is then routed through ASP **228**, A/D converter **230** and interface **232**. Interface **232** has outputs for controlling ASP **228**, motors **234** and timing generator **226**. From interface **232**, the raw image data passes over system bus **116** to computer **118**.

Referring now to FIG. **3**, a block diagram of the preferred embodiment for computer **118** is shown. System bus **116** provides connection paths between imaging device **114**, power manager **342**, central processing unit (CPU) **344**, dynamic random-access memory (DRAM) **346**, input/output interface (I/O) **348**, read-only memory (ROM) **350**, and buffers/connector **352**. Removable memory **354** connects to system bus **116** via buffers/connector **352**. Alternately, camera **110** may be implemented without removable memory **354** or buffers/connector **352**.

Power manager **342** communicates via line **366** with power supply **356** and coordinates power management operations for camera **110**. CPU **344** typically includes a conventional processor device for controlling the operation of camera **110**. In the preferred embodiment, CPU **344** is capable of concurrently running multiple software routines to control the various processes of camera **110** within a multi-threading environment. DRAM **346** is a contiguous block of dynamic memory which may be selectively allocated to various storage functions.

I/O **348** is an interface device allowing communications to and from computer **118**. For example, I/O **348** permits an external host computer (not shown) to connect to and communicate with computer **118**. I/O **348** also permits a camera **110** user to communicate with camera **110** via an external user interface and via an external display panel, referred to as a view finder.

ROM **350** typically comprises a conventional nonvolatile read-only memory which stores a set of computer-readable program instructions to control the operation of camera **110**. Removable memory **354** serves as an additional image data storage area and is preferably a non-volatile device, readily removable and replaceable by a camera **110** user via buffers/connector **352**. Thus, a user who possesses several removable memories **354** may replace a full removable memory **354** with an empty removable memory **354** to effectively expand the picture-taking capacity of camera **110**. In the preferred embodiment of the present invention, removable memory **354** is typically implemented using a flash disk.

Power supply **356** supplies operating power to the various components of camera **110**. In the preferred embodiment, power supply **356** provides operating power to a main power bus **362** and also to a secondary power bus **364**. The main power bus **362** provides power to imaging device **114**, I/O **348**, ROM **350** and removable memory **354**. The secondary power bus **364** provides power to power manager **342**, CPU **344** and DRAM **346**.

Power supply **356** is connected to main batteries **358** and also to backup batteries **360**. In the preferred embodiment, a camera **110** user may also connect power supply **356** to an external power source. During normal operation of power supply **356**, the main batteries **358** provide operating power to power supply **356** which then provides the operating power to camera **110** via both main power bus **362** and secondary power bus **364**.

During a power failure mode in which the main batteries **358** have failed (when their output voltage has fallen below a minimum operational voltage level) the backup batteries **360** provide operating power to power supply **356** which then provides the operating power only to the secondary power bus **364** of camera **110**. Selected components of camera **110** (including DRAM **346**) are thus protected against a power failure in main batteries **358**.

Power supply **356** preferably also includes a flywheel capacitor connected to the power line coming from the main batteries **358**. If the main batteries **358** suddenly fail, the flywheel capacitor temporarily maintains the voltage from the main batteries **358** at a sufficient level, so that computer **118** can protect any image data currently being processed by camera **110** before shutdown occurs.

According to the present invention, the flexible architecture of the digital camera provides an improved method for manipulating images in a digital camera. More specifically, the present invention provides a method and system for grouping a series of captured images so that the images may be manipulated collectively without user intervention. In a preferred embodiment, the method and system for grouping a series of images is implemented by providing a marking and unmarking function within the user interface of the camera.

FIG. **4** is a diagram depicting a user interface **400** for a digital camera that operates in accordance with the present invention. In one preferred embodiment, the user interface includes a view finder **402**, an image capture button called a photo button **404**, a four-way navigation control button **406**, a menu button **408**, a menu area **410** within the view finder **402**, and function keys **412**. The user interface may also include an optional sound button **414** and a mode button **416**.

The particular layout of the user interface **400**, however, is not important to implement the present invention. The user interface **400** is preferably located on back of the digital camera, but the user interface buttons may also be positioned in other locations on the camera. For example, the photo button **404** may be positioned on the top of the camera, instead of the back of the camera, etc.

Referring again to FIGS. **1** and **4**, the user interface **400** operates in two modes: view finder mode and review mode. In a preferred embodiment, the photo button **404** is a two position button. The view finder mode begins when a user aims the camera at an object **112** and presses the photo button **404** into the first position. Once this occurs, the view finder **402** displays the image of the object **112** as shown through the camera's imaging device **114**. The user may then press the photo button **404** into the second position to capture the image shown in the view finder **402**. Review mode begins by pressing any other button on the interface **400**.

Referring again to FIG. **4**, once in the review mode, the view finder **402** displays a series of cells **420** that represent

the digital images that have been captured in the digital camera. The view finder **402** is shown here as displaying nine image cells **420**. Each cell **420** displays what's called a thumb nail of the digital image, which is a shrunken version of the digital image stored in the camera.

While in review mode, the user may navigate through a series of displayed cells **420** in the view finder **402** using the four-way navigation control **406**. The cell **420** currently selected by the four-way navigation control **406** is encircled with a highlighted area **430**, which in this embodiment is a selection rectangle; other shapes for the highlighted area are also suitable.

In a preferred embodiment, the function keys **412** of the user interface **400** are programmable, i.e., they may be assigned different functions. The function currently assigned to a respective function key **412** is indicated by several soft keys that are displayed in the menu area **410** of of the view finder **402**. The soft keys displayed in the menu area **410** may be changed by pressing the menu key, which also changes the functions assigned to the function keys **412**. The soft keys displayed in the menu area **410** are also changed automatically by the digital camera in response to user actions, as described further below.

In a preferred embodiment, there are three levels of softkey functions may be displayed in the menu area **410**. FIGS. **4**–**6** depict the menu area **410** displaying the three levels of softkey functions that are assigned to corresponding function keys **412**. FIG. **4** shows the menu area **410** displaying the first level of soft keys; "Delete", "Mark", and "View". FIG. **5** shows the menu area **410** displaying the second level of soft keys; "Save", "Make", and "View". FIG. **6** shows the menu area **410** displaying the third level of soft keys; "Duplicate", "Viewby", and "Edit".

Referring again to FIG. **4**, the "View" softkey is one of the softkeys displayed in the first menu level. Highlighting a cell **420** and pressing the function key **412** under the "View" soft key will cause the full-sized image to be displayed in the view finder **402**.

According to the present invention, rather than performing operations on a single image at one time, a user can create a temporary group of images using the "Mark" softkey. After creating a group, the user may then perform functions on the group, such as deleting the group, or transforming the temporary group into a permanent group of images.

In a preferred embodiment of the present invention, a temporary group of images is created through the use of the "Mark" softkey. In response to the user pressing the function key **412** under the "Mark" softkey, a mark number is displayed in the image cell **420** of the highlighted image and the highlighted image becomes a marked image. After an image is marked, the Mark softkey in the menu area is replaced an "Unmark" softkey. This allows the user remove an image from the group, which removes the mark number from the image cell of the highlighted image.

The "Delete" softkey is the remaining softkey displayed in the first menu level. The delete function provided by the Delete softkey operates on a single image or on a group of marked images. If no images have been marked, then pressing the function key assigned to the delete function will delete the currently highlighted image. If several images have been marked, then pressing the delete function key **412** will delete the temporary group of marked images, even if the highlight area **430** is currently on a non-marked image. In either case, after pressing the delete function key **412**, a dialog box or other type of prompt preferably appears asking the user to confirm the request to delete.

Referring again to FIG. **5**, the "Save" and "Make" softkeys are functions that enable the user to create a permanent group of images from the temporary group of marked images. This may be accomplished in a variety of ways.

In one preferred embodiment, pressing the function key under the Save softkey creates a permanent group of images by saving all of the marked images into a folder or directory within the digital camera's DRAM **346** and/or removable memory **354**. A dialog box or other type of prompt appears asking the user to name the folder. After the user names the folder, the folder is displayed as a new cell **420** in the view finder **402**.

In a second preferred embodiment, pressing the save function key creates a permanent group of images by giving the images a common name so that they may sort together during a sort function. In another preferred embodiment, a permanent group of images is created by placing them physically next to each other.

Pressing the function key **412** under the "Make" softkey creates a permanent group by placing all of the marked images into one file, as opposed to a folder. This creates a "slide show" in which the marked images can be played back in the sequence that they were marked. After the Make function key is depressed, a dialog box or other type of prompt appears asking the user to name the file. After the user names the file, the file is displayed as a new cell **420** in the view finder **402**. Highlighting the new slide show cell and pressing the view function causes each of the images included in the "slide show" to be individually displayed in the view finder **402** without user intervention.

According to the present invention, the Save and Make functions allow a group of marked images to be stored in the camera as a single item that can be viewed or played. This allows images to be categorized, e.g., images of a beach scene could be placed in an outdoor category, a family category, an ocean category, a vacation category, or any combination of the above. Instead of creating a duplicate of the image and storing the image in each category, each category would include a pointer to the stored image.

The "Label" softkey is the remaining softkey displayed in the second menu level. Highlighting a folder cell or slide show cell and pressing the function key associated with the Label softkey enables the user to label a folder or file of images with a category name (e.g. beach scenes).

Referring now to FIG. **6**, the "Duplicate" softkey operates on a currently highlighted image. Pressing the duplicate function key causes the highlighted marked image to be duplicated. The "Viewby" softkey operates on all images. Pressing the viewby key allows the user to view cells by some criteria, such as by date and time, for example.

According to the present invention, a user may randomly create an ordered group of images using the four-way navigation control **406**, the menu button **408**, the menu area **410**, and the programmable function keys **412**, as shown in FIG. **7**.

FIG. **7** is a flowchart depicting the process of creating an ordered group of images in accordance with the present invention.

The process begins when a user selects an image by positioning the highlight area **430** over the image cell using the four-way navigational control button in step **500**. The user then presses the function key corresponding to the Mark softkey in step **502**. After the mark key is depressed, the cell is updated to display the number of images that have been marked during the current sequence in step **504**. The cell may also be updated to display an optional graphic, such as

a check-mark for example. After the image cell has been updated, the mark softkey in the menu area is updated to "Unmark" in step **506**.

Next, the user decides whether to add more images to the temporary set of marked images in step **508**. If the user decides to add more images, then the user selects the next image by positioning the highlight area over the image using the four-way navigational control button in step **510**.

If the user decides not to add more images to the temporary group of marked images in step **508**, then the user decides whether to remove any of the marked images from the group in step **512**. If the user decides not to remove any of the marked images from the group, then the user may select a function, such as "Delete", "Save", and "Make", to apply to the group in step **514**.

If the user decides to remove a marked image from the group, then the group is dynamically modified as follows. The user first selects the image to be removed by positioning the highlight area over the marked image using the fourway navigational control button in step **516**. The user then presses the function key corresponding to the Unmark softkey in step **518**.

After the unmark key is depressed, the cells for the remaining marked images may be renumbered. This is accomplished by determining whether the selected image is the highest numbered image in the marked group in step **522**. If the selected image is not the highest numbered image in the marked group, then the marked images having a higher number are renumbered by subtracting one from the respective mark number and displaying the result in their cells in step **524**. After the mark number is removed from the unmarked image and the other mark numbers renumbered if required, the unmark softkey in the menu area is updated to "Mark" in step **526**. The user may then continue to modify the group by marking and/or unmarking other images accordingly.

The process of grouping images in the digital camera will now be explained by way of a specific example with reference to FIGS. **8**–**11**.

Referring to FIG. **8**, assume that the user wishes to create a group of images beginning with the image cell highlighted with the highlighted area **430**. At this point, the soft keys displayed in the menu area **410** are prompts to the user that the user may perform the displayed functions, such as "Mark", on the highlighted image. The mark function is then performed by the user pressing the Mark function key that is associated with the "Mark" soft key.

FIG. **9** is a diagram showing the result of the user pressing the Mark function key. The highlighted image cell **430** is updated with the number "**1**", which indicates that the image is the first to be marked. After marking the image, the menu area **410** is automatically updated with the "UnMark" soft key. Pressing the corresponding UnMark function key would result in the number "**1**" being removed from the image cell.

FIG. **10** is a diagram showing the user marking another image by positioning the highlight area **430** over a second image cell **432** and pressing the Mark function key. This causes the highlight image cell **432** to be updated with the number "**2**". As a result of marking the image, the menu area **410** is automatically updated with the "UnMark" soft key.

FIG. **11** is a diagram showing a third image being selected and marked, as described above, in which case, the icon area of the image **434** is updated with the number "**3**".

Referring again to FIG. **7**, while marking images, the method for removing images in the group (steps **512**–**524**) also allows a user to dynamically reorder or re-sequence the images in the group. For example, assume the user has marked five images, labeled as "**1**", "**2**", "**3**", "**4**", "**5**", and wants to make image "**3**" the last image in the group. This can be accomplished by unmarking image "**3**", which results in images "**4**", and "**5**" being renumbered "**3**" and "**4**", respectively. Thereafter, the user may mark the original image "**3**", which results in the image being labeled with the number "**5**".

After the group has been created with the chosen images in the desired sequence, the user may manipulate the marked images using functions chosen from the menu levels. Using the group functions provided by the programmable softkeys, the user may save the group into a folder, create a slide show, view the group, or delete the group.

A method and system for grouping images in a digital camera has been disclosed that is an improvement in the way images may be manipulated in a digital camera. Although the present invention has been described in accordance with the embodiments shown, one of ordinary skill in the art will readily recognize that there could be variations to the embodiments and those variations would be within the spirit and scope of the present invention.

For example, many methods may be chosen for displaying optional functions that may be performed on the images. For instance, the soft keys shown may be displayed on any menu level according to the application, or the softkeys may be replaced with actual buttons on the camera interface. Also, instead of displaying the soft keys in the menu area **410** itself to indicate whether the selected image will be marked, unmarked or duplicated, a dialog box may be displayed in the view finder **402** that prompts the user whether they want the current image to be marked, unmarked, or duplicated.

Accordingly, many modifications may be made by one of ordinary skill in the art without departing from the spirit and scope of the appended claims.

What is claimed is:

1. A method for grouping a series of images stored in a digital camera, the digital camera including a view finder for displaying the stored images, a navigation control button, and one or more function keys, the method comprising the steps of:

(a) allowing a user to navigate among the displayed images using the navigation control button;

(b) allowing the user to randomly select one of the displayed images;

(c) assigning a mark function to one of the function keys, such that in response to a user pressing the assigned mark function key, the image currently selected is marked to provide a marked image;

(d) repeating steps (a) through (c) to create a temporary group of marked images; and

(e) assigning at least one group function to one of the function keys, such that in response to the user pressing the assigned group function key, the group of marked images is collectively manipulated by the user within the digital camera.

2. A method as in claim **1** wherein step (e) further includes the step of:

(e1) providing a view function as the at least one group function, such that in response to a user pressing the assigned view function key, each of the marked images is displayed sequentially in the view finder without manual intervention.

3. A method as in claim 1 wherein step (e) further includes the step of:

(e1) providing a save function as the at least one group function, such that in response to a user pressing the assigned save function key, a permanent group of images is created by saving each of the marked images in a folder.

4. A method as in claim 1 wherein step (e) further includes the step of:

(e1) providing a slide show function as the at least one group function, such that in response to a user pressing the assigned slide show function key, a permanent group of images is created by saving each of the marked images in a file.

5. A method as in claim 1 wherein step (e) further includes the step of:

(e1) providing a duplicate function as the at least one group function, such that in response to a user pressing the assigned duplicate function key, each of the marked images are duplicated, and if no images have been marked, then the image currently selected is duplicated.

6. A method as in claim 1 wherein step (e) further includes the step of:

(e1) providing a delete function as the at least one group function, such that in response to a user pressing the assigned delete function key, each of the marked images is deleted, and if no images have been marked, then the image currently selected is deleted.

7. A method as in claim 1 further including the step of:

(f) assigning an unmark function to one of the function keys, such that in response to the user pressing the assigned unmark function key, the mark number is removed from the image currently selected is unmarked.

8. A method for grouping a series of images stored in a digital camera, the digital camera including a navigation control button, one or more function keys, and a view finder for displaying stored images, the method comprising the steps of:

(a) allowing a user to navigate among the displayed images using the navigation control button;

(b) allowing the user to randomly select one of the displayed images;

(c) enabling the user to mark the selected image using a corresponding function key;

(d) displaying a mark indication on the selected image in response to the user pressing the corresponding function key;

(e) repeating steps (a) through (d) to provide a temporary group of marked images;

(f) enabling the user to select one of the functions of saving the group, deleting the group, and creating a slide show from the group using a corresponding function key; and

(g) saving the group, deleting the group, and creating a slide show from the group in response to the user pressing the appropriate function key.

9. A method as in claim 8 wherein step (d) further includes the step of:

(d1) providing a mark number as the mark indication.

10. A method as in claim 9 further including the steps of:

(h) allowing the user to unmark the selected image using a corresponding function key; and

(i) removing the mark indication from the selected image in response to the user pressing the corresponding function key.

11. A method as in claim 10 wherein step (a) further includes the step of:

(b1) prompting the user to duplicate the selected image using a corresponding function key; and

(b2) duplicating the selected image in response to the user pressing the corresponding function key.

12. A digital camera device comprising:

a memory device for storing sets of image data;

a memory manager for allocating storage locations within said memory device to store said sets of image data;

an interface coupled to said memory device whereby an external host computer can access said sets of image data stored in said memory device;

a user interface for displaying a plurality of images corresponding to the image data, the user interface including a plurality of function keys, and means to navigate among and randomly select one of the plurality of images;

means coupled to the memory manager for assigning a mark function to one of the function keys, such that in response to the user pressing the assigned mark function key, the selected image is marked, such that in response to the user repeatedly selecting images and pressing the assigned mark function key, a temporary group of marked images is created; and

means coupled to the memory manager for assigning at least one group function to one of the function keys, such that in response to a user pressing the assigned group function key, the group of marked images is collectively manipulated by the user, within the digital camera.

* * * * *

EXHIBIT 6

US006486914B1

(12) **United States Patent**
Anderson

(10) **Patent No.: US 6,486,914 B1**
(45) **Date of Patent: Nov. 26, 2002**

(54) **METHOD AND SYSTEM FOR CONTROLLING USER INTERACTION IN A DIGITAL IMAGING DEVICE USING DYNAMIC OVERLAY BARS**

(75) Inventor: **Eric C. Anderson**, San Jose, CA (US)

(73) Assignee: **FlashPoint Technology, Inc.**, Peterborough, NH (US)

(*) Notice: Subject to any disclaimer, the term of this patent is extended or adjusted under 35 U.S.C. 154(b) by 0 days.

(21) Appl. No.: **09/032,172**

(22) Filed: **Feb. 27, 1998**

(51) **Int. Cl.**[7] **H04N 5/76**; H04N 5/222

(52) **U.S. Cl.** **348/333.02**; 348/232; 396/374; 386/107

(58) **Field of Search** 348/207, 222, 348/231–233, 239, 333.01, 333.02, 333.05, 333.11, 333.12, 552; 396/373, 374, 281, 287, 290, 291, 292; 345/619, 629, 634, 636, 641, 764, 768; 386/95, 96, 104, 107, 108

(56) **References Cited**

U.S. PATENT DOCUMENTS

5,896,131 A * 4/1999 Alexander 345/634
6,072,489 A * 6/2000 Gough 345/803
6,118,480 A * 9/2000 Anderson 348/207
6,167,469 A * 12/2000 Safai 345/733
6,177,957 B1 * 1/2001 Anderson 348/231
6,222,538 B1 * 4/2001 Anderson 348/709
6,223,190 B1 * 4/2001 Aihara 348/207
6,310,648 B1 * 10/2001 Miller 348/333.05

* cited by examiner

Primary Examiner—Ngoc-Yen Vu
(74) *Attorney, Agent, or Firm*—Sawyer Law Group LLP

(57) **ABSTRACT**

A method and system for controlling user interaction in a digital imaging device having a display using dynamic overlay bars. The digital imaging device includes at least two operating modes, where each of the operating modes has at least one mode-specific operation that can be performed on images. In response to operating in both of the operating modes, the digital imaging device displays a first overlay bar on the display that is dynamically updated with status information and interactive instructions that guide the user through the mode-specific operations.

9 Claims, 11 Drawing Sheets

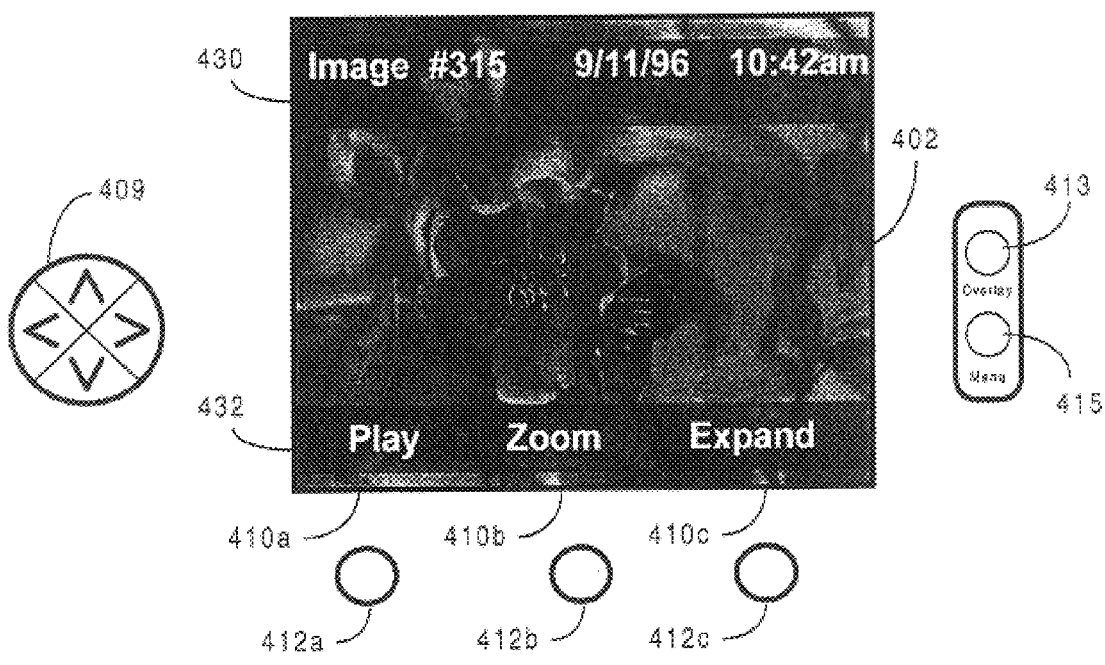

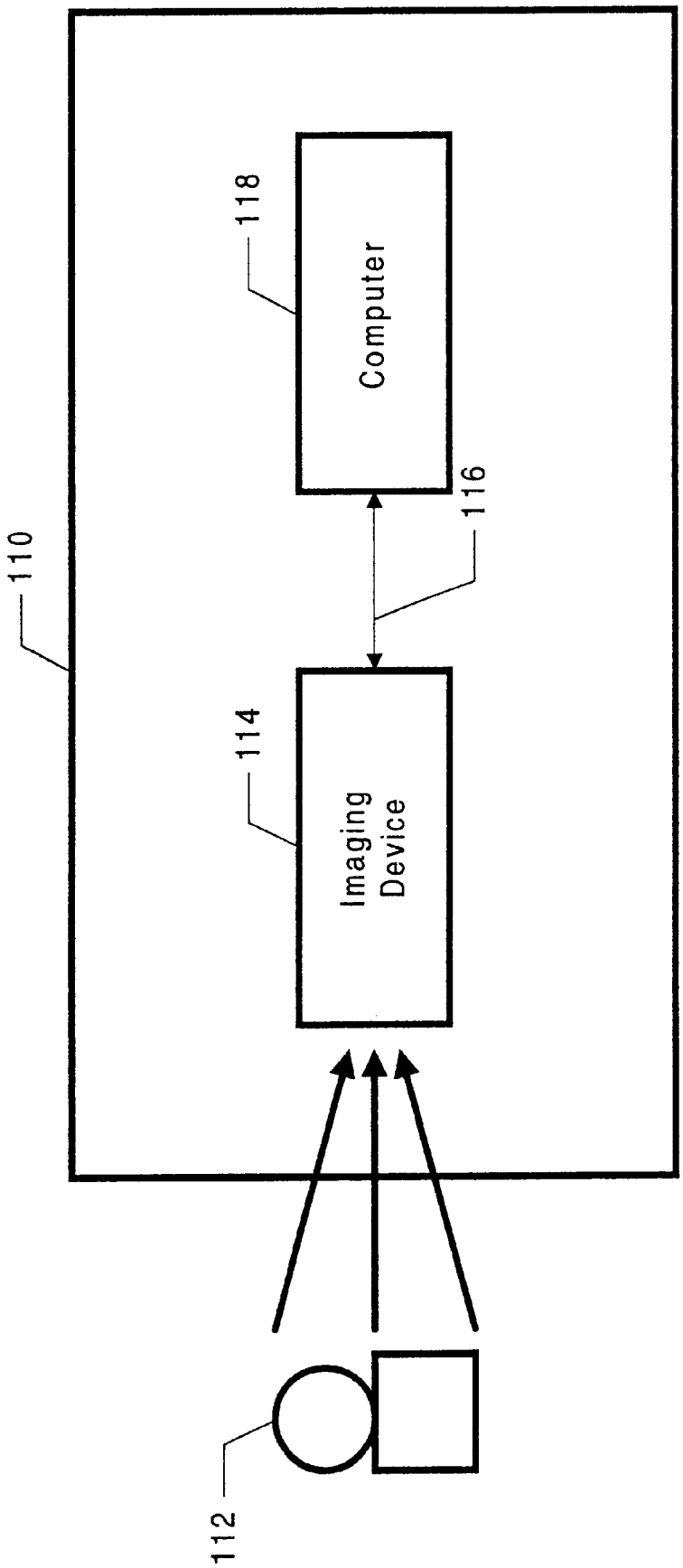

FIG. 1

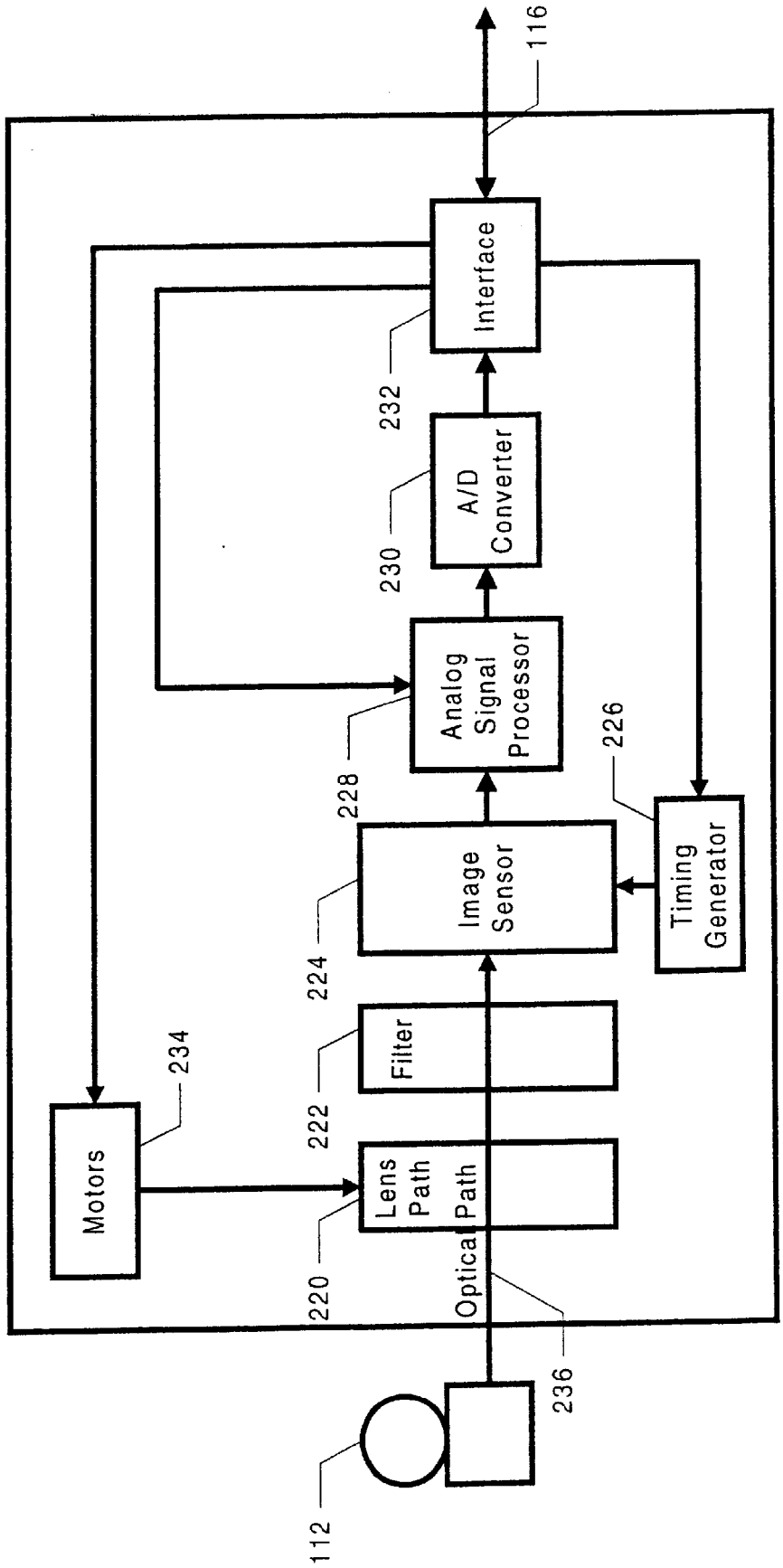
116
Interface
232
A/D Converter
230
Analog Signal Processor
228
226
Timing Generator
Image Sensor
224
Filter
222
234
Motors
Lens Path
Optical Path
220
236
112

FIG. 2

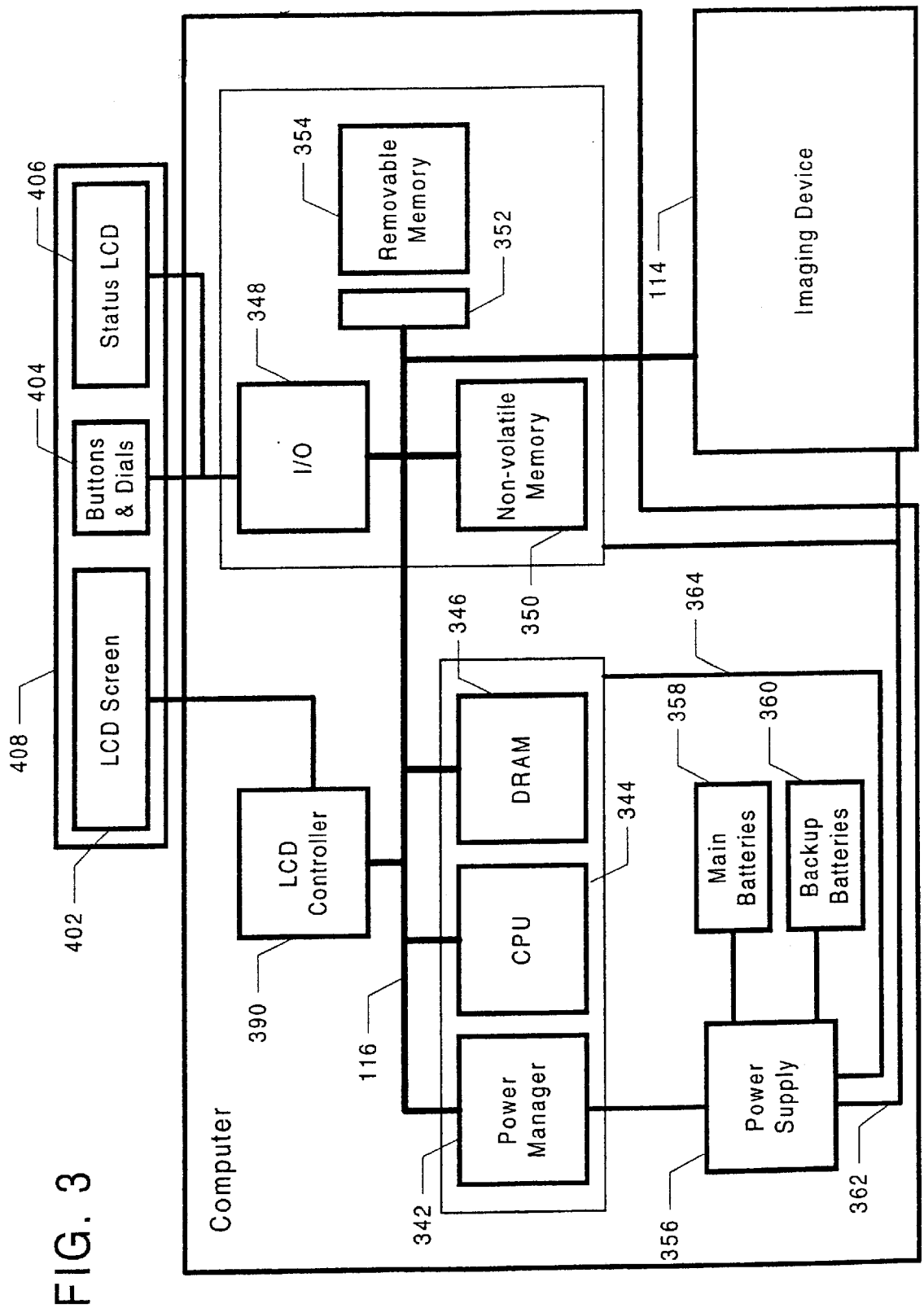
Computer
Imaging Device
114
Removable Memory
354
352
348
I/O
Non-volatile Memory
350
346
364
DRAM
358
360
Main Batteries
Backup Batteries
344
CPU
LCD Controller
390
116
Power Manager
342
Power Supply
356
362
406
Status LCD
404
Buttons & Dials
408
LCD Screen
402

FIG. 3

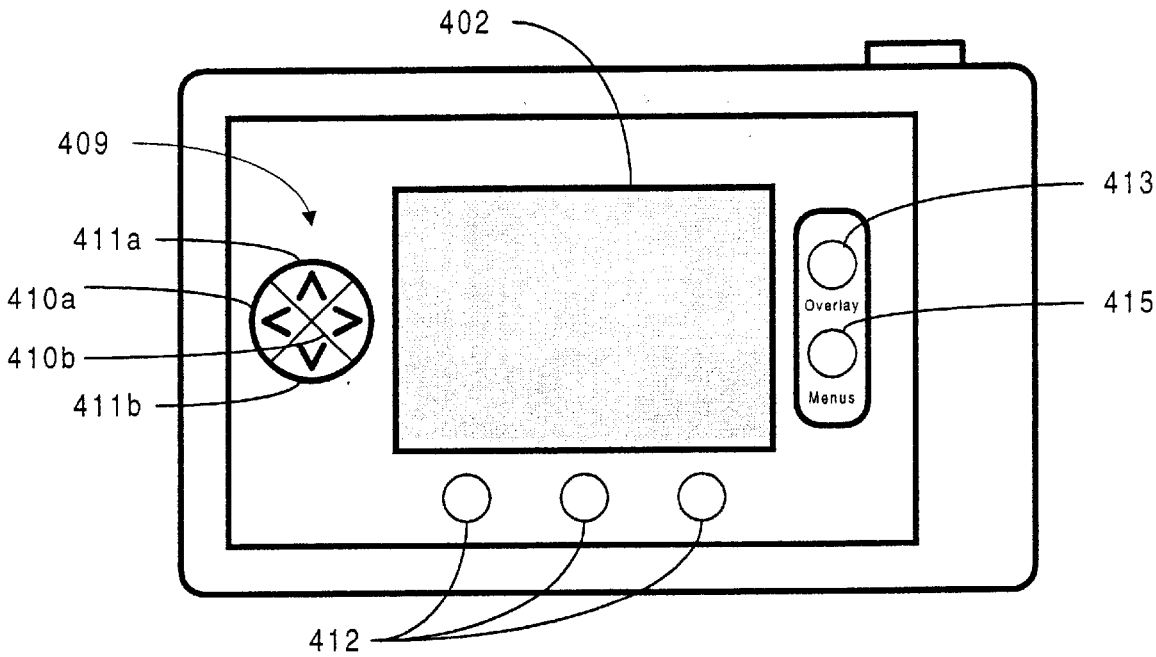
402
409
411a
410a
410b
411b
413
415
Overlay
Menus
412

FIG. 4

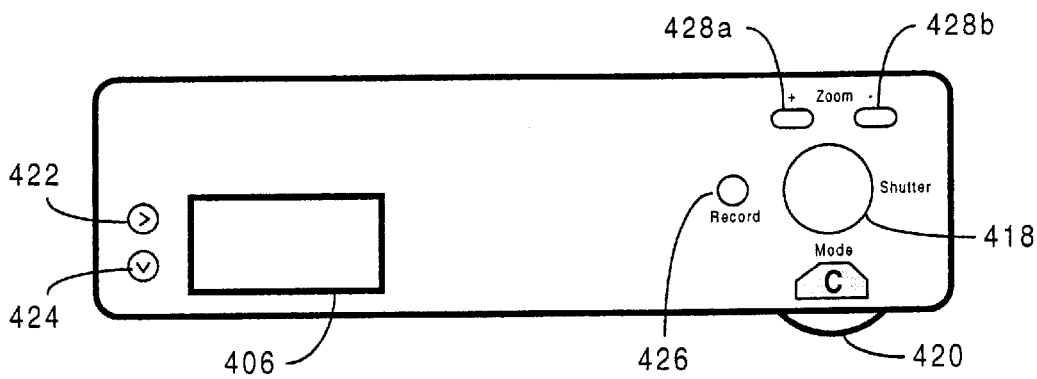
428a
428b
+ Zoom -
422
Record
Shutter
418
Mode
C
424
406
426
420

FIG. 5

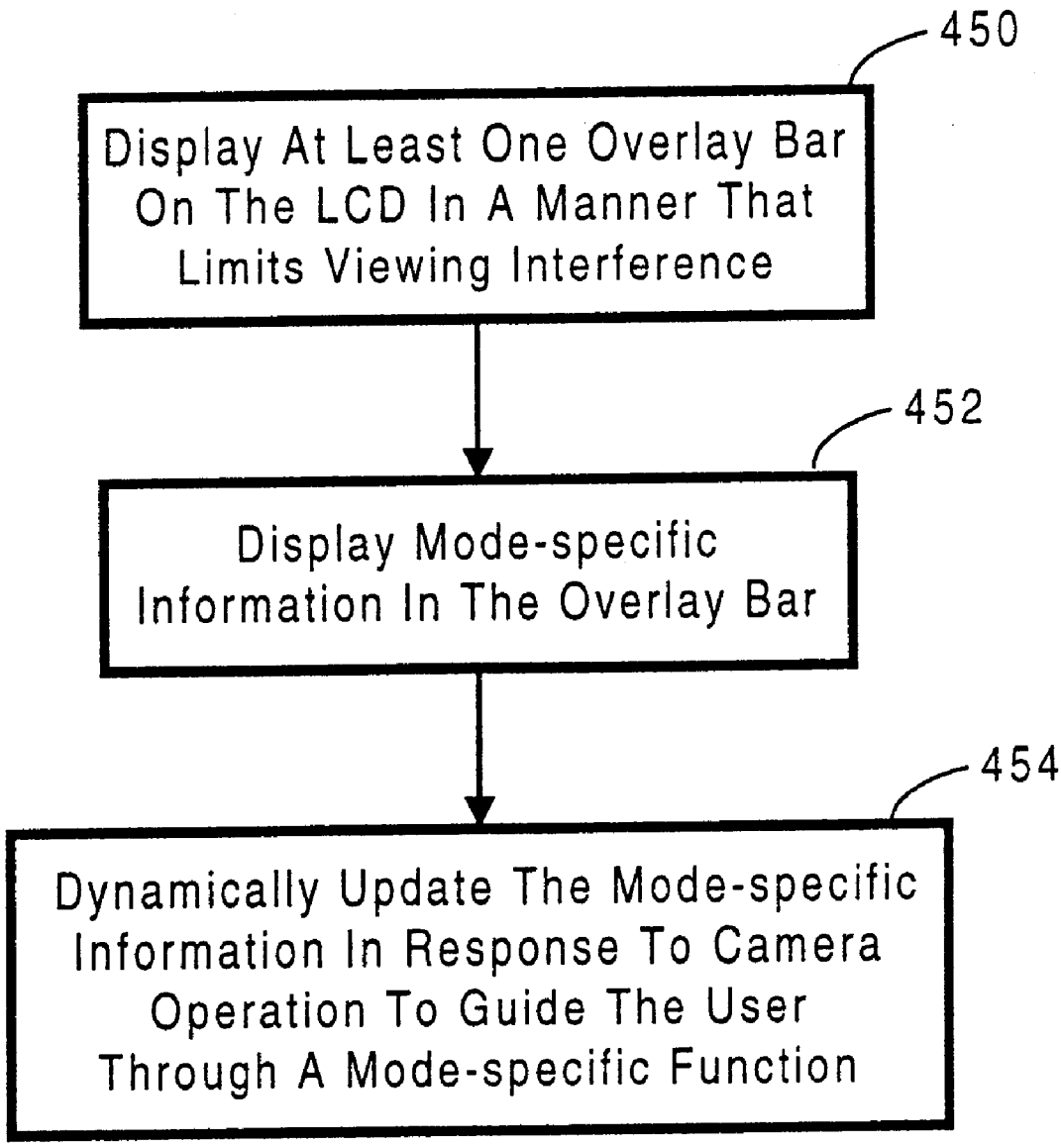
450
Display At Least One Overlay Bar On The LCD In A Manner That Limits Viewing Interference
452
Display Mode-specific Information In The Overlay Bar
454
Dynamically Update The Mode-specific Information In Response To Camera Operation To Guide The User Through A Mode-specific Function

FIG. 6

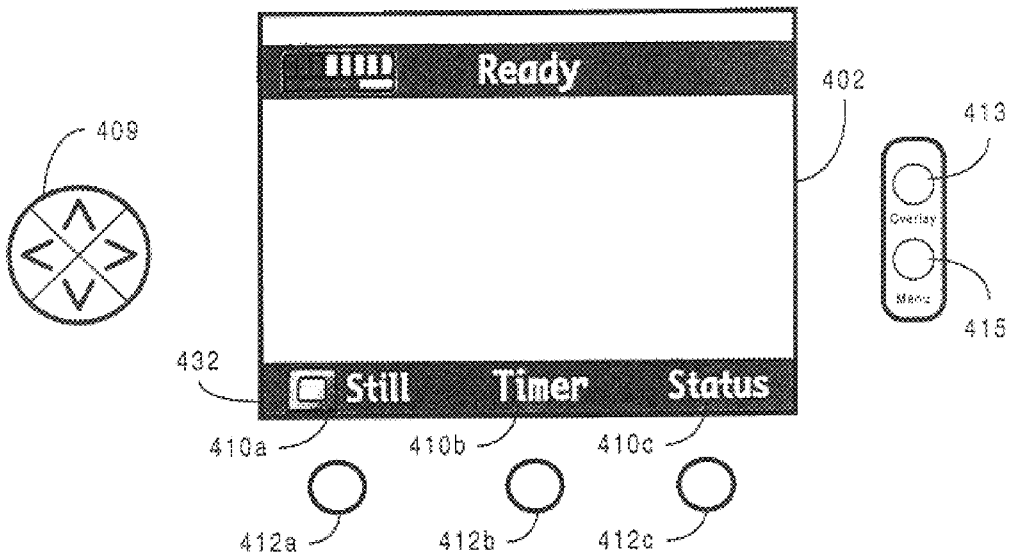
Ready
Still
Timer
Status
Overlay
Menu
409
402
413
415
432
410a
410b
410c
412a
412b
412c

FIG. 7A

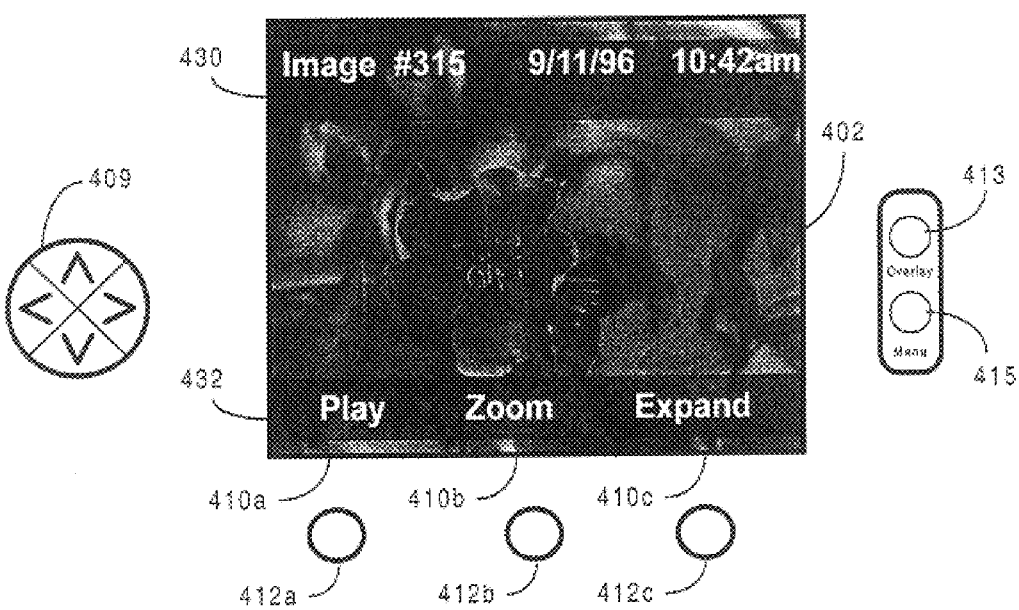
Image #315
9/11/96
10:42am
Play
Zoom
Expand
Overlay
Menu
430
409
402
413
415
432
410a
410b
410c
412a
412b
412c

FIG. 7B

FIG. 8A

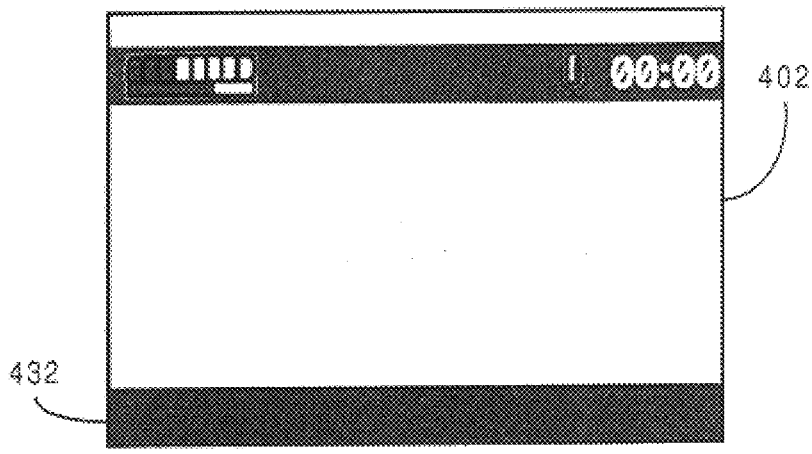

FIG. 8B

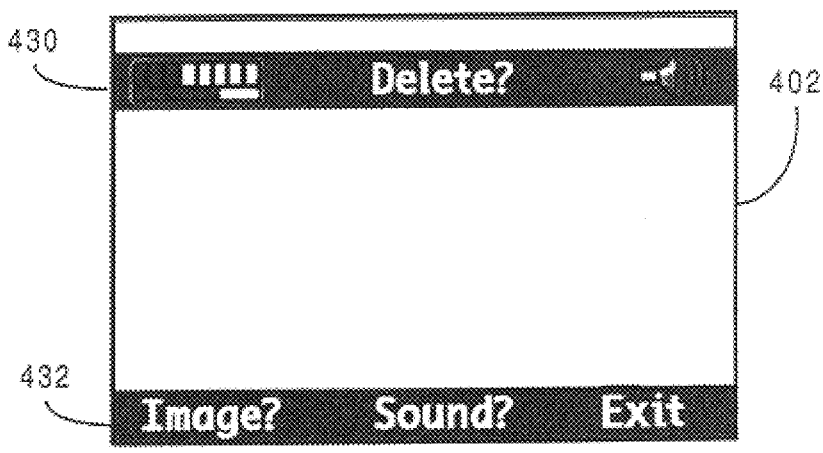

FIG. 8C

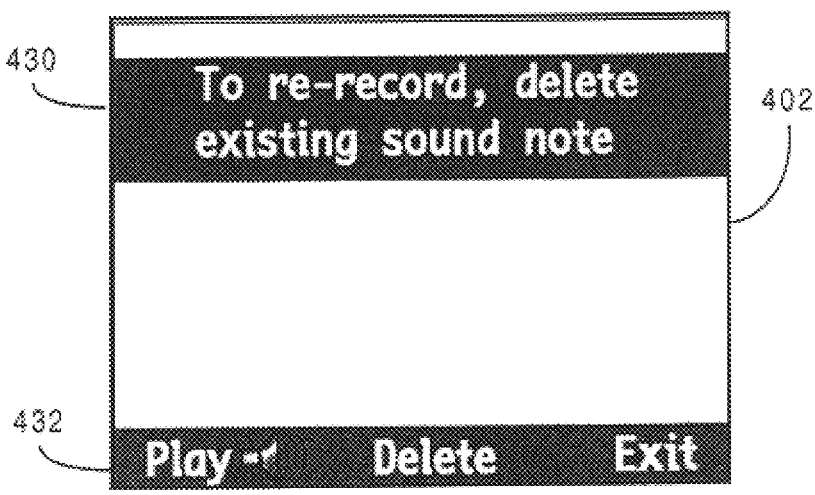

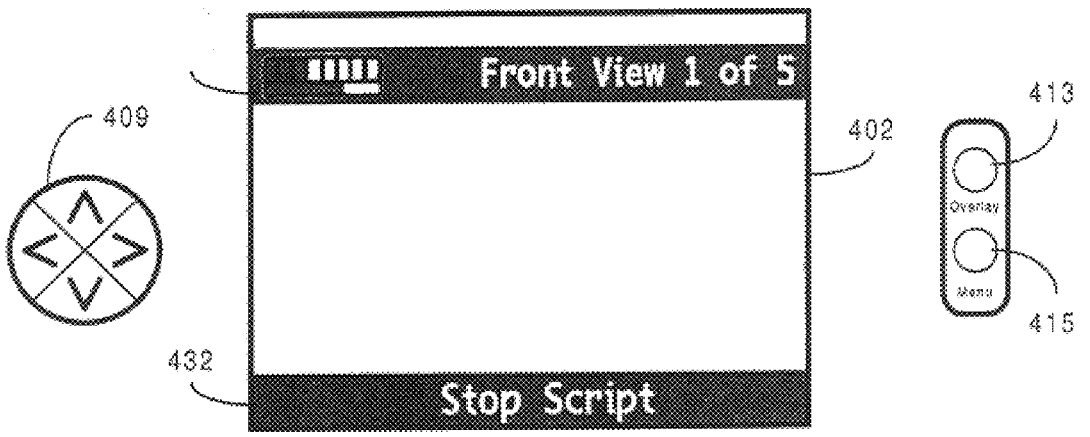
Front View 1 of 5
Stop Script
409
402
413
415
432
Overlay
Menu

FIG. 9A

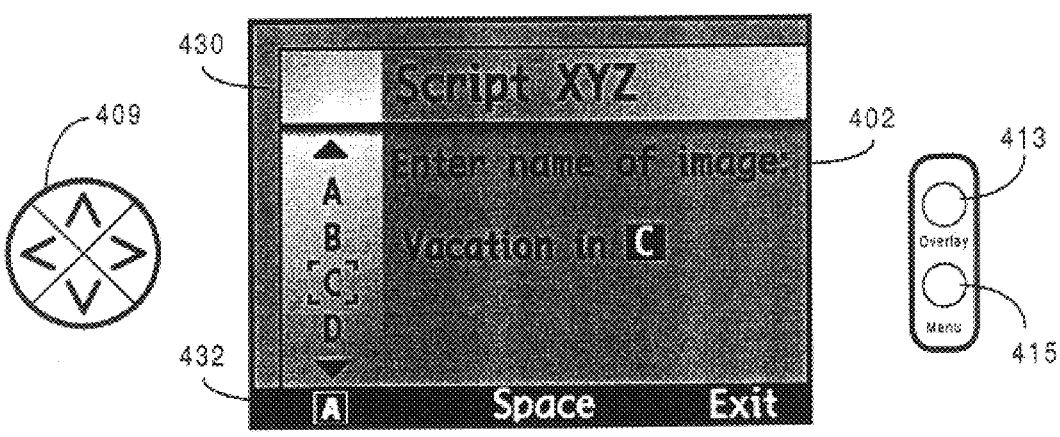
Script XYZ
Enter name of image:
Vacation in C
A
B
C
D
A
Space
Exit
430
409
402
413
415
432
Overlay
Menu

FIG. 9B

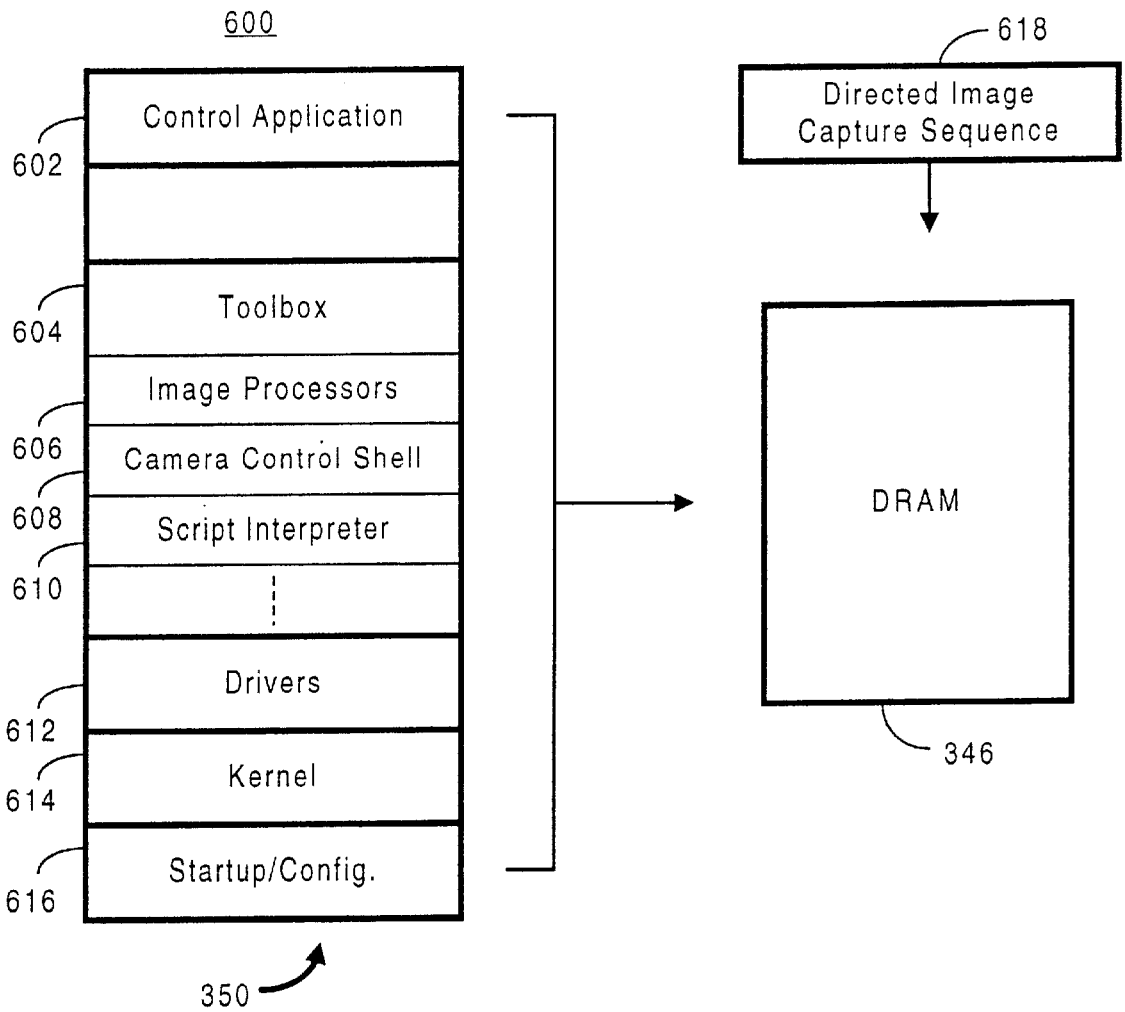
600
Control Application
602
Toolbox
604
Image Processors
606
Camera Control Shell
608
Script Interpreter
610
Drivers
612
Kernel
614
Startup/Config.
616
350
618
Directed Image Capture Sequence
DRAM
346

FIG. 10

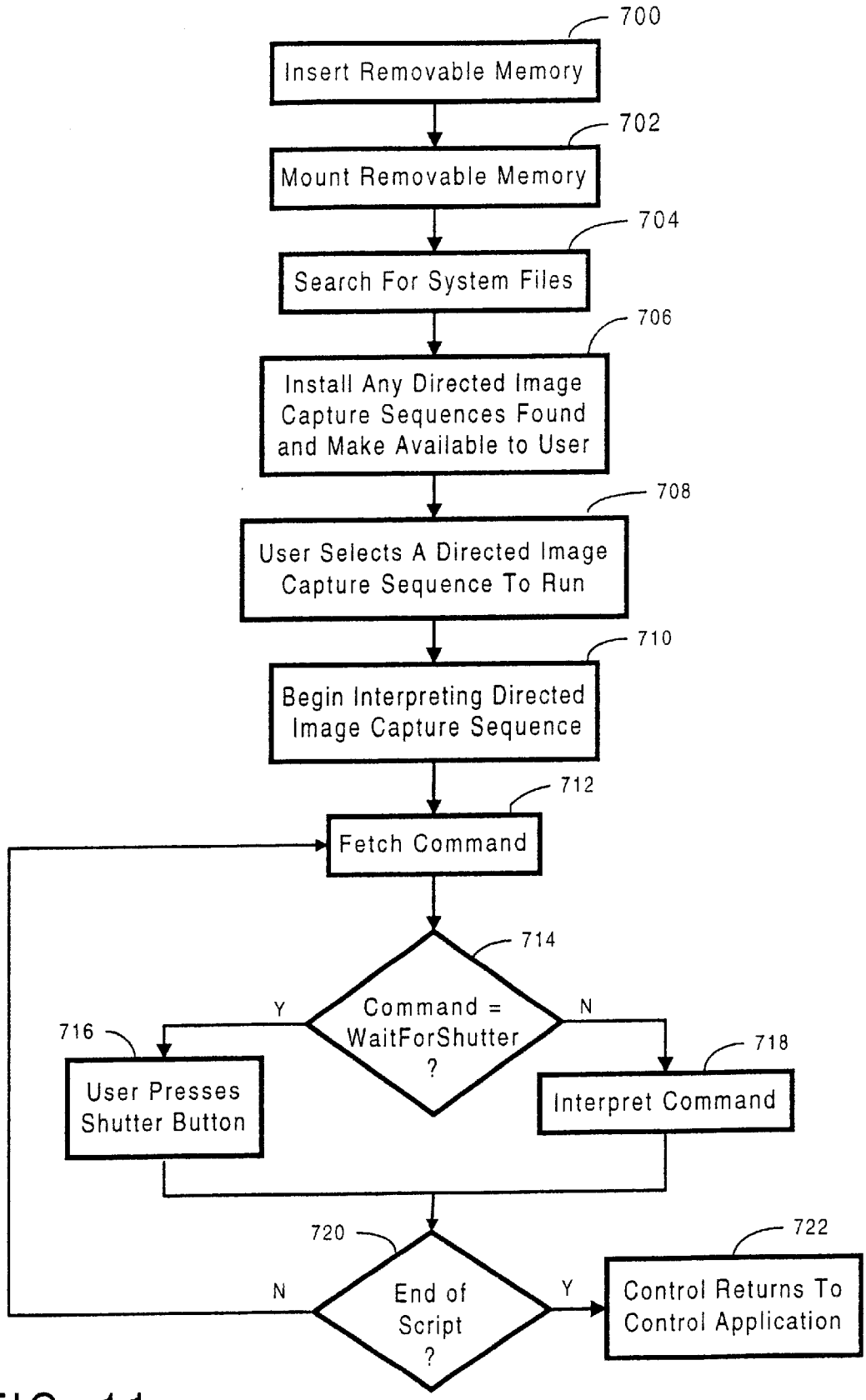
700
Insert Removable Memory
702
Mount Removable Memory
704
Search For System Files
706
Install Any Directed Image Capture Sequences Found and Make Available to User
708
User Selects A Directed Image Capture Sequence To Run
710
Begin Interpreting Directed Image Capture Sequence
712
Fetch Command
714
Command = WaitForShutter ?
Y
N
716
User Presses Shutter Button
718
Interpret Command
720
End of Script ?
N
Y
722
Control Returns To Control Application

FIG. 11

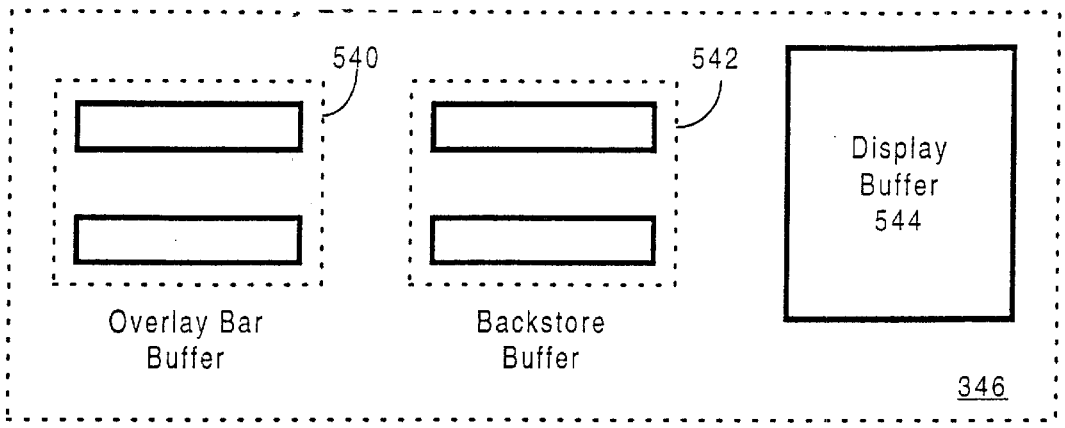

FIG. 12A

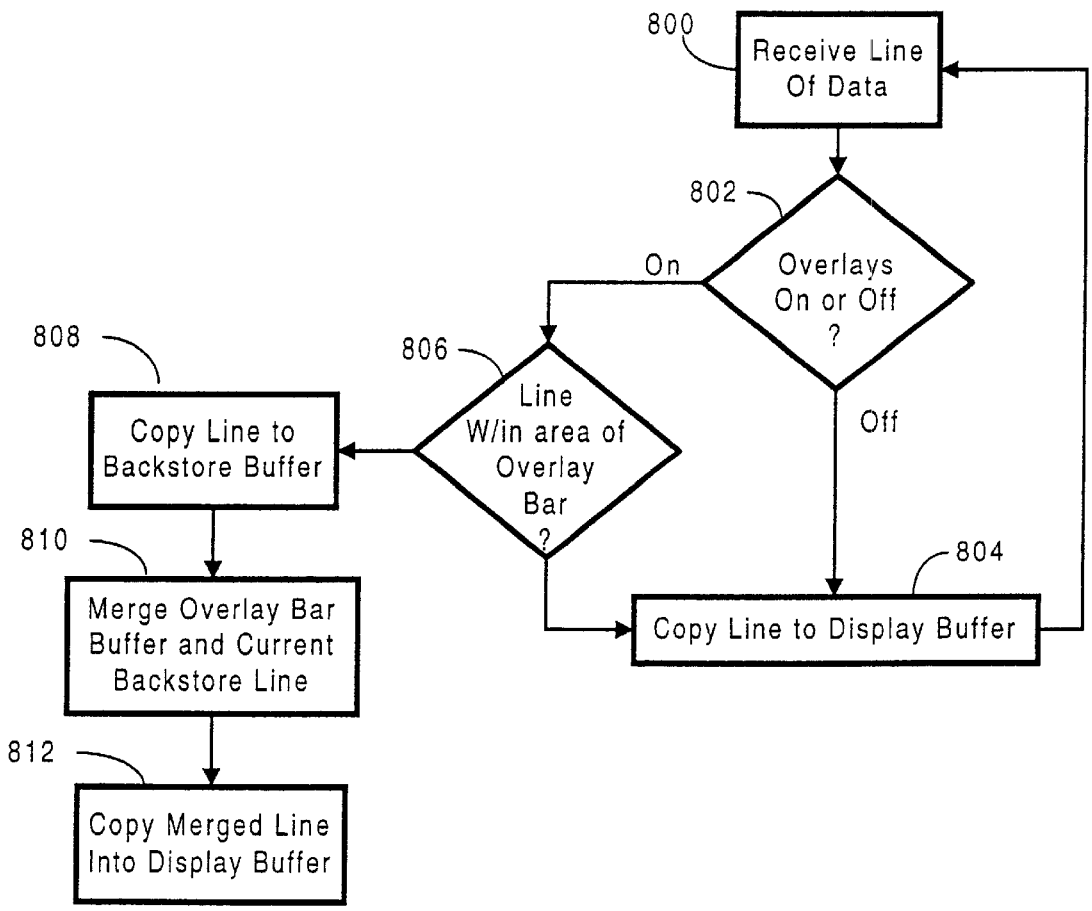

FIG. 12B

METHOD AND SYSTEM FOR CONTROLLING USER INTERACTION IN A DIGITAL IMAGING DEVICE USING DYNAMIC OVERLAY BARS

CROSS-REFERENCE TO RELATED APPLICATIONS

This application is related to U.S. patent application Ser. No. 08/939,993 filed on Sep. 26, 1997, entitled "A Method And System For Manipulating Images Stored In A Digital Imaging Device" (P110CIP); and U.S. patent application Ser. No. 09/032,659, entitled "Directing Image Capture Sequences In A Digital Imaging Device Using Scripts" (P165), and U.S. patent application Ser. No. 09/032,177, entitled "Method and System For Displaying Overlay Bars In A Digital Imaging Device" (P166), filed on the same date as the present application.

FIELD OF THE INVENTION

The present invention relates generally to digital imaging devices, including digital cameras, and more particularly to a method and system for controlling user interaction in a digital imaging device using dynamic overlay bars.

BACKGROUND OF THE INVENTION

Most digital cameras today are similar in size to and behave like conventional point-and-shoot cameras. Unlike conventional cameras, however, most digital cameras store digital images in an internal flash memory or on external memory cards, and some are equipped with a liquid-crystal display (LCD) screen on the back of the camera. Through the use of the LCD, most digital cameras operate in two modes, record and play, although some only have a record mode.

In record mode, which is also referred to as capture mode, the LCD acts as a live viewfinder in which the user may view an object or scene before taking a picture, similar to the LCD on a camcorder. When the user presses the shutter button, whatever scene is shown on the LCD is captured as a still image. Besides capturing still images, some digital cameras can be set to capture other image types, such as burst and time-lapse images. A burst image is a series of still images captured in rapid succession, while a time-lapse image is series of still images taken at regular intervals over a longer time period.

In play mode, the LCD acts as a playback screen for reviewing the previously captured images. Typically, several small images are displayed on the LCD at once, and by selecting one of the images the user may then display the full-sized version of the images in the LCD.

Although conventional digital cameras are more convenient for the user to use than film cameras due to instant play back of captured images, there are several drawbacks in the user interface that restrict user interaction with the camera. When capturing images, for example, it is often helpful for the user to be informed about the current settings or operational state of the camera, such as whether the flash is on/off, and the current image type setting, for instance.

In conventional digital cameras, such status information is typically displayed as text blocks or accessed through a status screen or the like. The disadvantage with the text blocks is that they are typically small (10–15 characters in length), and therefore, the amount of status information they can provide is very limited. Typically, text blocks are used to display information such as the current image number.

Moreover, when text blocks are displayed with a solid color background, the background obscures that portion of the image. And when text blocks are displayed with no background (only text), the text is difficult to distinguish from the colors comprising the image, making the text hard to read.

The disadvantage with status screens is that in order to view the status information, the image currently displayed on the LCD must be replaced with the status screen, causing the user to loose sight of the image. Another approach would be to shrink the display area of the LCD and add a black status area in the viewfinder, as done in optical viewfinders of film cameras. This, however, would shrink the size of images displayed in the viewfinder.

Another drawback with conventional digital cameras is that as technological advances are made, digital cameras are continually provided with more features and functions, which make them more complex for the user to interact with. This is similar to what occurs with PC software, which increasingly grows larger and harder to use. PC developers attempt to alleviate this problem by providing more and larger help menus. Each help menu usually opens in its own window with paragraphs of scrolling text.

Using PC help menus in a digital camera to guide user interaction through the camera features and functions would be less than ideal because of the limited size of the camera LCD. And assuming help menus were displayed, they would either obscure whatever image was being displayed or otherwise total replace it, which is disadvantageous to the picture taker.

Accordingly, what is needed is an improved system and method for displaying status information in a manner that does not obscure the display of the current object in the LCD, and for controlling user interaction in a digital imaging device. The present invention addresses such a need.

SUMMARY OF THE INVENTION

The present invention provides a method and system for controlling user interaction in a digital imaging device having a display using dynamic overlay bars. The digital imaging device includes at least two operating modes, where each of the operating modes has at least one mode-specific operation that can be performed on images. In response to operating in either of the operating modes, the digital imaging device displays a translucent overlay bar on the display that is dynamically updated with status information and interactive instructions that guide the user through the mode-specific operations.

In a second aspect of the present invention, the interactive instructions are implemented using a script, which is a text-based program that may be easily written by the user and externally loaded into the camera. Once loaded into the camera, the commands comprising the script are translated and executed one-by-one by a script interpreter to guide the user through the newly provided function.

A third aspect of the present invention, provides a method and system for displaying overlay bars on the display. First, text and graphic information to be displayed on the overlay bars are stored in an overlay bar buffer, and then displayed on the display. Thereafter, the current image is displayed on the display line-by-line. The lines of the image that will be displayed within the area of an overlay bar are stored in a backstore buffer. Each line in the backstore buffer is merged with its corresponding lines in the overlay bar buffer and displayed. This aspect of the present invention makes the overlay bars appear translucent, and the image appear as though it is sliding beneath the overlay bars as it is being

displayed. When the user turns-off the overlay bars, only the portions of the image stored in the backstore buffer need be re-displayed to provide the original image, thus eliminating the need to re-display the entire image.

Accordingly, the method and system of the present invention provides status information to a user and allows the user to perform complex camera functions and features to the images with minimum effort, while allowing for easy viewing of the images. Displaying interactive instructions on dynamic overlay bars to guide the user through complex tasks in accordance with the present invention eliminates the need for help screens and for the user to remember complicated key sequences, and increases the ease of use and operation of the digital camera. The manner in which the overlay bars and the image is displayed makes the user interface more aesthetically pleasing, while increasing the display speed of the digital imaging device.

BRIEF DESCRIPTION OF THE DRAWINGS

FIG. **1** is a block diagram of a digital camera that operates in accordance with the present invention.

FIG. **2** is a block diagram of an example embodiment for the imaging device of FIG. **1**.

FIG. **3** is a block diagram of an example embodiment for the computer of FIG. **1**.

FIGS. **4** and **5** are diagrams depicting the preferred embodiment of the camera's **110** user interface.

FIG. **6** is a flow chart is shown illustrating the process of controlling user interaction in a digital imaging device using dynamic overlay bars in accordance with the present invention.

FIGS. **7**A, and **7**B are diagrams illustrating the use of dynamic overlay bars on the LCD screen during capture and play modes, respectively.

FIGS. **8**A through **8**C are diagrams illustrating how the overlay bars may be used to guide the user through a recording of a sound annotation.

FIGS. **9**A and **9**B are diagrams illustrating example directed image capture screens.

FIG. **10** is a block diagram illustrating the camera software, which is stored in ROM, and DRAM, where the software is executed.

FIG. **11** is a flow chart illustrating an exemplary process of installing and running a script-based directed image capture in a preferred embodiment of the present invention.

FIG. **12**A is a diagram illustrating a memory buffer organization for displaying overlay bars.

FIG. **12**B is a flow chart illustrating the process of displaying overlay bars on the LCD in accordance with the present invention.

DETAILED DESCRIPTION OF THE INVENTION

The present invention relates to an improved method and system for controlling user interaction in a digital imaging device using dynamic overlay bars. The following description is presented to enable one of ordinary skill in the art to make and use the invention and is provided in the context of a patent application and its requirements. Although the present invention will be described in the context of a digital camera, various modifications to the preferred embodiment will be readily apparent to those skilled in the art and the generic principles herein may be applied to other embodiments. That is, any digital imaging device which displays images, icons and/or other items, could incorporate the features described herein below and that device would be within the spirit and scope of the present invention. Thus, the present invention is not intended to be limited to the embodiment shown but is to be accorded the widest scope consistent with the principles and features described herein.

The present invention is a method and system for controlling user interaction in a digital imaging device using dynamic overlay bars. According to the present invention, both status information and interactive instructions are displayed on dynamic overlay bars to enable a user to perform complex camera functions and apply features to the images with minimum effort, while allowing for easy viewing of the images.

Referring now to FIG. **1**, a block diagram of a digital camera **110** is shown for use in accordance with the present invention. Camera **110** preferably comprises an imaging device **114**, a system bus **116** and a computer **118**. Imaging device **114** is optically coupled to an object **112** and electrically coupled via system bus **116** to computer **118**. Once a photographer has focused imaging device **114** on object **112** and, using a capture button or some other means, instructed camera **110** to capture an image of object **112**, computer **118** commands imaging device **114** via system bus **116** to capture raw image data representing object **112**. The captured raw image data is transferred over system bus **116** to computer **118** which performs various image processing functions on the image data before storing it in its internal memory. System bus **116** also passes various status and control signals between imaging device **114** and computer **118**.

Referring now to FIG. **2**, a block diagram of an example embodiment of imaging device **114** is shown. Imaging device **114** typically comprises a lens **220** having an iris, a filter **222**, an image sensor **224**, a timing generator **226**, an analog signal processor (ASP) **228**, an analog-to-digital (A/D) converter **230**, an interface **232**, and one or more motors **234**.

In operation, imaging device **114** captures an image of object **112** via reflected light impacting image sensor **224** along optical path **236**. Image sensor **224**, which is typically a charged coupled device (CCD), responsively generates a set of raw image data in CCD format representing the captured image **112**. The raw image data is then routed through ASP **228**, A/D converter **230** and interface **232**. Interface **232** has outputs for controlling ASP **228**, motors **234** and timing generator **226**. From interface **232**, the raw image data passes over system bus **116** to computer **118**.

Referring now to FIG. **3**, a block diagram of an example embodiment for computer **118** is shown. System bus **116** provides connection paths between imaging device **114**, an optional power manager **342**, central processing unit (CPU) **344**, dynamic random-access memory (DRAM) **346**, input/output interface (I/O) **348**, non-volatile memory **350**, and buffers/connector **352**. Removable memory **354** connects to system bus **116** via buffers/connector **352**. Alternately, camera **110** may be implemented without removable memory **354** or buffers/connector **352**.

Power manager **342** communicates via line **366** with power supply **356** and coordinates power management operations for camera **110**. CPU **344** typically includes a conventional processor device for controlling the operation of camera **110**. In the preferred embodiment, CPU **344** is capable of concurrently running multiple software routines to control the various processes of camera **110** within a multithreaded environment. DRAM **346** is a contiguous

block of dynamic memory which may be selectively allocated to various storage functions. LCD controller **390** accesses DRAM **346** and transfers processed image data to LCD screen **402** for display.

I/O **348** is an interface device allowing communications to and from computer **118**. For example, I/O **348** permits an external host computer (not shown) to connect to and communicate with computer **118**. I/O **348** also interfaces with a plurality of buttons and/or dials **404**, and an optional status LCD **406**, which in addition to the LCD screen **402**, are the hardware elements of the camera's user interface **408**.

Non-volatile memory **350**, which may typically comprise a conventional read-only memory or flash memory, stores a set of computer-readable program instructions to control the operation of camera **110**. Removable memory **354** serves as an additional image data storage area and is preferably a non-volatile device, readily removable and replaceable by a camera **110** user via buffers/connector **352**. Thus, a user who possesses several removable memories **354** may replace a full removable memory **354** with an empty removable memory **354** to effectively expand the picture-taking capacity of camera **110**. In the preferred embodiment of the present invention, removable memory **354** is typically implemented using a flash disk.

Power supply **356** supplies operating power to the various components of camera **110**. In the preferred embodiment, power supply **356** provides operating power to a main power bus **362** and also to a secondary power bus **364**. The main power bus **362** provides power to imaging device **114**, I/O **348**, non-volatile memory **350** and removable memory **354**. The secondary power bus **364** provides power to power manager **342**, CPU **344** and DRAM **346**.

Power supply **356** is connected to main batteries **358** and also to backup batteries **360**. In the preferred embodiment, a camera **110** user may also connect power supply **356** to an external power source. During normal operation of power supply **356**, the main batteries **358** provide operating power to power supply **356** which then provides the operating power to camera **110** via both main power bus **362** and secondary power bus **364**. During a power failure mode in which the main batteries **358** have failed (when their output voltage has fallen below a minimum operational voltage level) the backup batteries **360** provide operating power to power supply **356** which then provides the operating power only to the secondary power bus **364** of camera **110**.

FIGS. **4** and **5** are diagrams depicting the preferred hardware components of the camera's **110** user interface **408**. FIG. **4** is back view of the camera **110** showing the LCD screen **402**, a four-way navigation control button **409**, an overlay button **413**, a menu button **414**, and a set of programmable soft keys **416**. FIG. **5** is a top view of the camera **110** showing a shutter button **418**, and a mode dial **420**. The camera may optionally include status LCD **406**, status LCD scroll and select buttons **422** and **424**, a sound record button **426**, and zoom-in, zoom-out buttons **428***a* and **428***b*.

The digital camera of the present invention is controlled by graphical-user-interface (GUI) based operating system (OS), which is in contrast to conventional digital cameras that are controlled by proprietary hardware architectures. In the preferred embodiment of the present invention, the OS provides the digital camera with several different operating modes for supporting various camera functions. Although the digital camera may include several different operating modes, the modes relevant to this description are capture mode, and play mode.

In capture mode, the camera **100** supports the actions of preparing to capture an image, and capturing an image through the use of either the LCD screen **402** or the status LCD **406**. In play mode, the camera **110** supports the actions of displaying full-sized views of captured images, and play-backing various media types associated with the images, such as sound. The user may switch between the various modes, using the mode dial **420**. When the camera is placed into a particular mode, that mode's default screen appears in the LCD screen **402** in which a set of mode-specific items, such as images, icons, and text, are displayed.

The present invention provides a method and system for controlling user interaction in a digital imaging device using dynamic overlay bars. According to the present invention, the dynamic overlay bars are used to provide the user with both status information and interactive instructions. The interactive instructions are automatically updated in response to normal camera operations to guide the user through predefined operations of the camera, thus making the device extremely easy to use. In addition, the manner in which the dynamic overlay bars are displayed reduces viewing interference with the currently displayed object.

Referring now to FIG. **6**, a flow chart is shown illustrating the process of controlling user interaction in a digital imaging device using dynamic overlay bars in accordance with the present invention. The process begins by displaying an image on the LCD screen **402** along with at least one overlay bar that provides a dynamic prompt area in a way that minimizes viewing interference with the displayed image in step **450**.

In a preferred embodiment, viewing interference is minimized by positioning the overlay bar along an edge of the LCD screen **402** and by displaying the background of the bar translucently so that the user may see the image through the overlay bar. The overlay bar may also be displayed with a solid color background, but this is less desirable since the bar would overwrite that portion of the image.

In response to the camera being placed into one of the operating modes, the overlay bar displays mode-specific information for the user in step **452**. In a preferred embodiment, the mode-specific information displayed on the overlay bar includes a combination of static status information, dynamically updated soft key labels, and interactive instructions pertaining to the particular mode, as described further below. After the mode-specific information is displayed, the mode-specific information is then dynamically updated during the operation of the camera to guide the user through a mode-specific function in step **454**.

To more particularly describe the present invention, refer to FIGS. **7**A and **7**B illustrating the use of dynamic overlay bars on the LCD screen **402** during two different operating modes of the digital camera **110**. As shown, in a preferred embodiment of the present invention, two overlay bars **430** and **432** are simultaneously displayed on the LCD screen **402**, rather than one, to strike a balance between the amount of information provided to the user and the amount of screen area consumed by text and/or graphics.

Overlay bar **430** may be used primarily to display status information and interactive instructions, while overlay bar **432** may be used primarily to display soft key labels **410** corresponding to soft keys **412**. Both overlay bars **430** and **432** may be turned-off in each of the camera operating modes by pressing the overlay "on/off" button **413** so that users can have an unobstructed view of images if they so choose (off), or extra help in operating the camera (on).

Referring to FIG. **7**A, the display of the overlay bars **430** and **432** on the LCD screen **402** during capture mode is

shown. In capture mode, the camera **110** supports the actions of preparing to capture an image, and capturing an image through the use of either the LCD screen **402** alone or with the aid of an optional optical viewfinder (not shown).

Overlay bar **430** is updated with capture status information during capture mode, which may include a graphic memory gauge, and text indicating the state of the camera (Ready), for example. The memory gauge provides the user with a constant overview of camera memory usage in terms of disk space, and may also show working memory usage. In a preferred embodiment, the memory bar displays disk space usage as segments filling-up, and displays working memory usage as the bar below those segments, which is constantly updated to reflect current memory status. When the working memory buffers are empty, the bottom part of the bar would be clear. When there is the equivalent of storage for only a few pictures left, the storage gauge may flash and the overlay bar **430** may be updated with a message, such as "Storage Almost Full". If a user tries to take a picture without adequate storage, then the overlay bar **430** may be updated to reflect this status by displaying the message "Inadequate Storage," along with an optional sound from the camera.

The overlay bar **430** may also be updated to reflect other types of capture status information and may be expanded into additional lines if needed. The additional capture status information could include the following: 1) Low Battery Indication—when main batteries run low, a battery icon may replace the storage gauge and a overlay bar **430** may be updated to flash "Battery Low"; 2) Shake Warning Indication—when light level is too low for recommended hand held operation and user has disabled the strobe system "Shake Warning" may be displayed in the overlay bar **430**; and 3) No Focus Indication—when the focus system cannot adequately focus the camera lens, a "No Focus" may be displayed in the overlay bar **430**.

Referring now to FIG. **7**B, the display of the overlay bars **430** and **432** on the LCD screen **402** during play mode is shown. In a preferred embodiment, the play screen layout displays one full-sized image at a time and the user may chronologically scroll through the full-sized images in the LCD screen **402** using the left/right buttons on four-way navigation control button **409**. Users can also play back various media types, such as time-lapse, bursts and slide show images according to either default or user defined play back rates.

In the play mode, overlay bar **430** displays status information relating to the current image being displayed, such as the image name/number, and the date and time of capture. The status information may also include graphical icons indicating what category of images the image belongs to and the image type.

Referring to both FIGS. **7**A and **7**B, besides displaying status information, the second use of the dynamic overly bars of the present invention is to display soft key labels **410** for soft keys **412**. As described in U.S. patent application Ser. No. 08/939,993 filed on Sep. 26, 1997, entitled "A Method And System For Manipulating Images Stored In A Digital Imaging Device," assigned to the present assignee and hereby incorporated by reference, soft keys **412***a*, **412***b*, and **412***c* of the user interface **400** are programmable, i.e., they may be assigned predefined functions. The function currently assigned to a respective soft key **412** is indicated by the soft key labels **410***a*, **410***b*, and **410***c* displayed in overlay bar **432**. After a soft key label **410** has been displayed, the user may then press the corresponding soft key **412** to have the function indicated by its label applied to the current image.

Referring to FIG. **7**B for example, the function assigned to the soft key **412***b* in during play mode is a "Zoom" function, which allows a user to zoom in and out of a displayed image. When the user zooms-in on an image by pressing the soft key **412***b*, the "Zoom" soft key label **410***b* is changed to "Zoom-out". While an image is zoomed, the user may pan around the image using the four-way control button **406**.

The functions assigned to the soft keys **412**, and thus the soft key labels **410**, are changed in response to several different factors. The soft keys **412** may change automatically either in response to user actions, or based on predetermined conditions existing in the camera, such as the current operating mode, the image type, and so on. The soft keys **412** may also be changed manually by the user by pressing the menu button **415**. Providing programmable soft keys **412** increases the number of functions that may be performed by the camera, while both minimizing the number of buttons required on the user interface, and reducing the need to access hierarchical menus.

As stated above, in addition to displaying status information and soft key labels, the dynamic overlay bars of the present invention may also be used to display interactive instructions to the user to guide user through camera functions. Basic types of camera functions include reviewing captured images, deleting images, annotating images with sound, and capturing groups of related images. With conventional cameras, the user would have to memorize complicated key sequences in order to perform these functions.

The present invention, in contrast, uses the dynamic overlay bars to display interactive instructions that guide the user through operations such as adding sound to an image, deleting images and/or sound, and capturing groups of related images. As described in U.S. patent application Ser. No. 08/939,993, for example, after the user has captured an image and the image is displayed for review, the overlay bar **432** automatically reminds the user that he or she has the option to delete the image. That is, one of the soft key labels **410** is changed to "Delete" and the user may then delete image by pressing the corresponding "Delete" soft key **412**.

Referring now to FIGS. **8**A through **8**C, diagrams illustrating how the overlay bars may be used to guide the user through a recording of a sound annotation are shown. The user may initiate the sound annotation function by pressing the record button **426** (see FIG. **5**) while an image is displayed. In response, a record indication, such as a microphone icon, is automatically displayed in overlay bar **430** along with a display of the duration of the recording, as shown in FIG. **8**A. After the sound annotation is recorded, the soft key labels **410** may be updated to display three options "Play", "Delete", and "Save"; where "Play" plays back the recorded sound, "Delete" deletes the recorded sound, and "Save" saves the recorded sound.

If the user is reviewing images in play or review modes, it is possible that the displayed image will have a sound annotation attached. Should the user presses the "Delete" soft key **412**, it is unclear what operation the user wishes to perform: delete the image, delete only the sound, or delete both. Indeed, an inexperienced user may not even consider all three of these possibilities before pressing the "Delete" button. Therefore, to guide the user through this operation, the dynamic overlay bars **430** and **432** are updated to prompt the user whether the image or the sound annotation is to be deleted, as shown in FIG. **8**B. The user may then indicate which is to be deleted by pressing the corresponding soft key **412**.

While reviewing images, it is also possible that the user may press the record button **426**. If the current image already includes a sound annotation, then it is unclear whether the user wishes to record a new sound annotation over the old one, or whether the user is unaware of the existing sound annotation. Therefore, to make sure the user doesn't inadvertently overwrite the existing sound, the overlay bar **430** is automatically updated to inform the user that sound will not be recorded until the user deletes the existing sound, as shown in FIG. **8**C. In addition, if the user doesn't recall the contents of the previous sound annotation, the user may listen to it before deleting it by pressing "Play", or the user may cancel the record operation altogether by pressing "Exit". Thus, according to the present invention the user is enabled to perform complex tasks in the camera without fumbling through a set of hierarchical menus.

Another use of displaying interactive instructions in the dynamic overlay bars **430** and **432** in accordance with the present invention is to direct the user through image capture sequences. The purpose of directed image capture sequences is to customize the camera's image capture process for a specific application. More specifically, a directed image capture is a camera feature that provides the user with interactive instructions and feedback during capture mode to guide the user through a series of task-oriented image captures.

Upon initiation of a directed image capture sequence, interactive instructions are displayed the dynamic overlay bars **430** and **432** that prompt the user to perform specific operations (capture image or capture sound), and for prompting the user to enter specific input (name and date). Customized directed image captures can be tailored to specific professions, such as insurance claims adjusters and real estate agents, who would benefit from the use of a digital camera to capture groups of related pictures.

Referring now to FIGS. **9**A and **9**B, diagrams illustrating example directed image capture screens are shown. The example shown in FIG. **9**A may pertain to an insurance-related directed image capture that prompts an insurance claims adjuster to take a series of pictures of a damaged vehicle, or it may pertain to a real estate application that guides a user through taking photos of a house for sale.

In the insurance example, once the directed image capture has started, the user may be instructed to take various views of the damaged car. The user may also be shown the number of the current image in that sequence, and the total number of images to be captured.

After the views of the car are taken, the directed image capture may then prompt the user to enter specific information, such as the name of the image, as shown in FIG. **9**B. The user may then enter text by choosing letters using the four-way control button **409**. For insurance purposes, the directed image capture may also request the user to input the owner's name, license plate number, claim number, and so on. The sequence of images and corresponding information may then be downloaded from the camera or to a host computer for automated database storage or web page generation.

In one embodiment of the present invention, one or more directed image capture sequences may be provided in the camera as built-in functions, especially if the camera is tailored for specific industries.

However, in a second aspect of the present invention, the camera is made more flexible by implementing the directed image capture sequences as a set of program instructions that are externally loaded into the camera. Once loaded in the camera **110**, the instructions are then preferably executed by the GUI-based system software running on CPU **344**.

FIG. **10** is a block diagram illustrating the contents of ROM **350** where the software is stored, and DRAM **346** where the software is executed. The software **600** may include a control application **602**, a toolbox **604**, drivers **612**, a kernel **614**, and a startup/configuration module **616**. The control application **602** is the main program that controls high-level functions of the digital camera and is responsible for interfacing with functions in the toolbox **604**.

Toolbox **604** comprises selected function modules that control how the digital camera captures and manipulates images. The modules may include image processors **606**, a camera control shell **608**, and a script interpreter **610**. Image processors **606** are programs for enhancing (e.g., adjusting the contrast, sharpening, converting the image to gray-scale, etc.) the digital image received from imaging device **114**. Camera control shell **608** receives and processes data structures for controlling camera functions. Script interpreter **610** translates and executes script statements, which are used to provide the directed image capture sequences and other camera **110** features, as explained below.

Drivers **612** comprise program instructions for controlling various camera **110** hardware components, such as motor **234** (FIG. **2**) and a flash (not shown). Kernel **614** comprises program instructions providing basic underlying camera operating system services including synchronization routines, task creation, activation and deactivation routines, resource management routines, etc. Startup/configuration **616** comprises program instructions for providing: initial camera **110** start-up routines such as the system boot routine and system diagnostics

When the camera **110** is first turned on and booted up, the startup/configuration **616** module begins to execute and loads the drivers **612**, the kernel **614**, the control application **602**, and system files containing configuration information into DRAM **346**. Thereafter, operation of the camera is passed to the control application **602**. In an alternative embodiment, the software **600** may executed out of ROM **350** in order to reduce the size of DRAM **346**.

The directed image capture sequence **618** may be loaded into the digital camera **110** from the removable memory **354** (FIG. **3**), a host computer, or a network, and stored in DRAM **346** to run in place of the control application **602**. In a preferred embodiment, the directed image capture sequence **618** is implemented using a script, which is a program written with text-based commands that may be easily written by the user. As used herein, a script may be written in any intrepreted language, such as Basic and Lisp, for example.

Once loaded into the camera, the script may be selected by the user from a menu where it is displayed for selection, and is thereafter executed by the control application **602** by passing the script to the script interpreter **610**. The script interpreter **610** then translates and executes the script instructions comprising the directed image capture sequence **618** one-by-one.

In an alternative embodiment, a directed image capture sequence **618** may be implemented as a traditional application program, rather than a script. However, an application program is typically written by a software developer in a traditional computer language, such as C++, compiled, and stored in machine language, which is a more complicated process than adding new functions to the camera via a text-based interpreted script.

FIG. **11** is a flow chart illustrating an exemplary process of installing and running a script-based directed image

capture in a preferred embodiment of the present invention. The process begins by inserting the removable memory **354** in step **700**. When the removable memory **354** is installed, the removable memory **354** is mounted by the operating system **600** in step **702**. Thereafter, the operating system searches for system files on the removable memory **354**, which alert the digital camera **110** to the presence of an external program, in step **704**.

Any system files found on the removable memory **354** and corresponding directed image capture sequences **618** are then installed and made available to the user for selection via menu choices that appear on the LCD screen **402** in step **706**. In a preferred embodiment, steps **704** and **706** are implemented as a hot-mount process when the removable memory **354** is inserted into the camera **110**, as described in U.S. patent application Ser. No. 09/032,385 entitled "Method And System For Dynamically Updating Software Funptions In A Digital Capture Device (P149)," filed Feb. 26, 1998 now U.S. Pat. No. 6,177,957, which is assigned to assignee of the present application and herein incorporated by reference.

Once the list of available directed image capture sequences **618** are displayed, the user selects one of the directed, image capture sequences **618** to run in step **708**. In a preferred embodiment, the list showing the available directed image capture sequences may be categorized in menus for easier selection. For example, assume a real estate agent has three different scripts for capturing images of different types of properties. The agent may name or create categories for the directed image capture sequences called "commercial", "industrial", and "residential", for instance. Selecting the residential category, for example, will cause a list of directed image captures to be displayed that are designed to capture pictures of different types of residential properties, such as one, two, and three bedroom homes. The user may then select a desired script depending on the particular house to be shot.

In one preferred embodiment, the directed image capture selections displayed in he menus may be erased from the camera by rebooting the camera, or by removing he removable memory **354** from the camera **110**.

After the user selects one of the directed image capture sequences **618** to run, the script interpreter **610** begins interpreting the directed image capture sequence **618** in step **710**, and control is passed from the control application **602** to the script. In step **712**, the script interpreter **610** fetches the first command comprising the directed image capture sequence **618**.

It is then determined whether the fetched command is a script "WaitForShutter" command in step **714**. This command causes control of the camera **110** to pass back to the control application **602** until the user presses the shutter button **418** to capture an image. The "WaitForShutter" command is preferably called with a quoted string parameter that is used in the dynamic overly bar **430** as the prompt to the user requesting an image capture (e.g., "Take photo of kitchen").

If the command is a "WaitForShutter" command in step **714**, then control is returned to the script after the user presses the shutter button **418** in step **716** to capture an image. If the fetched command is not a "WaitForShutter" command in step **714**, then the script interpreter **610** interprets and executes the command in step **718**.

After the user presses the shutter button **418** or after a script command has been executed, it is determined if the end of the script has been reached in step **720**. If not, then the next command is fetched in step **712**, and the process continues until the end of the script is reached, at which point control is returned to the control application **602** in step **722**.

Besides the "WaitForShutter" command, scripts may include two other categories of script commands. One category of commands pertain to camera settings, controls and other camera parameters specific to the subject and/or scene being captured. (ie: White Balance Modes, Exposure Modes, and Focus Modes). This category of commands enable users to input "Hints" optimizing the camera's photo systems for specific photographic conditions.

The other category of commands may pertain to file system operations and image tagging functions specific to the way in which image data is stored in memory. (ie: Guided Capture, Prompted Text/Audio Annotation, and Automated Image Grouping/Cataloging/Indexing.) This category of commands is particularly useful when used in conjunction with desktop computer applications where the hosting application is coordinated to take advantage of the preformatted media organization and tag information. For example, while a directed image capture sequence guides the user though a series of steps to create an image grouping, the script commands comprising the sequence generate appropriate tags and data structures to group the images and text captured during the sequence.

No matter whether the dynamic overlay bars of the present invention are used to display status information, soft key labels, or interactive instructions, as described herein, one important component affecting the user's experience is the method used to display the overlay bars on the image.

One approach would be the follow prior art techniques for displaying text (e.g. image name) over an image. This approach typically includes the following steps: 1) fetching the image to be displayed, which is typically stored in JPEG format, 2) decompressing and resizing the image, 3) displaying the decompressed image block-by-block, and then after the image is fully displayed, 4) writing the text on top of the image.

The problem with this method is that is visually unappealing to the user, and it reduces the performance of camera when the user turns-off the text display while viewing the image. The reason the method reduces camera performance is the following. When text or graphics are displayed over the image, they obscure a portion of the image. And when the text is turned-off, the obscured portions of the image must be displayed so that. the original image is seen without the text. In order to do this, however, the entire JPEG image must be fetched and decompressed again so that the obscured portions of the image can be displayed on the LCD, which can be a time consuming operation.

A third aspect of the present invention overcomes these disadvantages by providing an improved method and system for displaying the overlay bars that not only enhances the visual effect associated with the overlay bars, but also eliminates the need to re-decompress the JPEG image data when the user turns-off the overlay bars, thereby increasing performance of the camera.

According to this aspect of the present invention, the overlay bars are displayed first, followed by the image, wherein the image is made to appear as though it is sliding underneath the overlay bars as it is being displayed. The image appears as though is it is sliding underneath the overlay bars because the image is displayed on the LCD screen **402** line-by-line or block-by-block (as used herein, a block may include anywhere from one line to sixteen lines

of image data). As the display of the image progresses from the top of the screen **402**, the image therefore appears to be displayed behind the overlay bars **430** and **432** which are already present on the LCD screen **402**.

The overlay bars **430** and **432** are also provided with a translucent background so that so that the overlay bars **430** and **432** themselves do not obscure the image, but the text is easily distinguishable from the colors of the displayed image. The result is that after the image has been displayed, the overlay bars appear as a separate layer over the image. Further, the portions of the original image that intersect with the overlay bars **430** and **432** are saved, so that when the user turns-off the overlay bars **430** and **432**, only these portions of the image are redisplayed to restore the image. Thus this aspect of the present invention eliminates the need to re-decompress and display the entire image again, thereby increasing system performance.

Where typically, specialized hardware would be required to achieve the above-described effects, the present invention accomplishes the task through software and the manipulation of several memory buffers, as shown in FIG. **12**A.

FIG. **12**A is a diagram illustrating a buffer organization for displaying overlay bars, which in a preferred embodiment, resides in DRAM **346**. The buffer organization includes an overlay bar buffer **540**, a backstore buffer **542**, and a display buffer **544**. According to the present invention, the overlay bar buffer **540** is used to store the graphics data (graphics and text) that will be displayed in the overlay bars **430** and **432**. In a preferred embodiment the overlay bar buffer **540** is divided into a top and bottom portion, which store twenty lines of data each that correspond to the top and bottom overlay bar **430** and **432**, respectively.

The backstore buffer **542** is used to store original image data corresponding to the area of the LCD screen **402** where the overlay bars **430** and **432** will be displayed. The backstore buffer **542** is also divided into a top and bottom portion that are the same size as the top and bottom portions of the overlay bar buffer **540**.

As is typical in most rendering systems, the display buffer **544** is used to store the actual data that is to be displayed on the LCD. The data in the display buffer is accessed by LCD controller **390** (FIG. **3**) and displayed on the LCD.

FIG. **12**B is a flow chart illustrating the process of displaying overlay. bars on the LCD in accordance with the present invention. The first step in the process is to preferably receive an input line of decompressed image data from an image processing system in step **800**. The process may also be modified to receive an input block of decompressed image data. In a preferred embodiment, the image processing system for providing the input data may include an image decompressor for decompressing the image data, and a resizer for resizing the lines of image data to fit the size of LCD screen **402**.

Next, it is determined whether the overlay bars **430** and **432** are turned-on or off in step **802**. If the overlay bars are turned-off, then the line of image data is copied directly to the display buffer **544** in step **804** for display on the LCD screen **402** and the process continues. If the overlay bars remain off for the duration of the time it takes to display the image line-by-line or block-by-block, then the entire image is displayed on the LCD screen **402** using only the:display buffer **544**.

If the overlay bars are turned-on in step **802**, then it is determined whether the line of data will be displayed within the area of the LCD screen **402** that is occupied by an overlay bar in step **806**. If the line is within an overlay bar, the line is copied into the backstore buffer **542** in step **808**. The purpose of copying the line to the backstore buffer **542** is to save the portion of the image that will be displayed underneath the overlay bars **430** and **432**.

After the current line of image data is copied into the backstore buffer **542**, the corresponding line stored in the overlay bar buffer **540** is merged with the current line in the backstore buffer **542** in step **810**. The purpose of merging the two lines is to display the background of the overlay bars **430** and **432** translucently over the image on the LCD screen **402**. This is done by halving the luminance value of each pixel of the image data from the backstore buffer **542** that falls within the bounds of an overlay bar **430** or **432**, and overwriting each pixel in the line of image data that falls under a pixel of text or graphic data from the overlay bar buffer **540**. Halving the luminance value of the image data causes the colors of the image that overlap an overlay bar **430** or **432** to be half as bright, thus giving the overlay bar **430** or **432** a translucent appearance and allowing the user to see the image through the overlay bar **430** or **432**, as shown in FIG. **7**B. In an alternative embodiment, the translucency of the overlay bars **430** and **432** is provided by increasing, rather than decreasing, the luminance value of each image pixel falling within the area of an overlay bar. In this case, the text displayed in the overlay bars **430** and **432** is displayed using a dark color.

As the line from the overlay bar buffer **540** is merged with the line from the backstore buffer **542**, the resulting merged line is written into the display buffer **544** for display in step **812**. If the current line is the last line of image data in step **814**, then the process ends. Otherwise the next line of image data is received in step **800** and the process continues. In an alternate embodiment of the present invention, the determination of whether the overlay bars **802** are on/off in step **802** may be performed after copying the input line to the backstore buffer **542** in step **8**. In this embodiment, the input line is copied into the backstore buffer **542** even when the overlay bars **430** and **432** are off.

In a preferred embodiment of present invention, the software **600** controlling the digital camera **110** is implemented as event driven software, which responds to input from the user (select menu, press :button, etc.) or other applications at unregulated times. When, for example, the user first switches to play mode and/or. selects a new image to display, the first steps that are performed in the process are to blank the LCD screen **402**, fill the overlay bar buffer **540** with relevant mode-specific information, and then contents of the overlay bar buffer **540** and the backstore buffer **542** are merged and written to the display buffer **544**. In this case, the backstore buffer **542** may contain black or white pixel values to provide the blank screen. Thereafter, the process proceed as described in FIG. **13**.

If the user turns-off the overlay bars **430** and **432** while an image is displayed, then the process is interrupted and software **600** copies the entire contents of the backstore buffer **542**, which contains the original image data, to the display buffer **544** for display. This causes the overlay bars to disappear from the LCD screen **402** and restores the original image without having to re-decompress and display the entire image over again.

If the user then turns-on the overlay bars **430** and **432**, the software **600** merges the contents of the overlay bar buffer **540** and the backstore buffer **542** to provide the translucent bars and text over the image, and then copies the result to the display buffer **544** for display. This may be done by executing step **812** and **814** for each line of the data in the buffers **540** and **542**.

Also, when the overlay bars **430** and **432** are on, if the overlay bars **430** and **432** are updated by the control application **602** due to a change in status or instructions, the contents of the overlay bar buffer **540** and the backstore buffer **542** are remerged and written into the display buffer **544** for display.

A method and system for controlling user interaction in a digital imaging device using dynamic overlay bars has been disclosed, which enables a user to apply camera functions and features to images with minimum effort, while allowing for easy viewing of the image. In addition, the present invention displays dynamic interactive instructions to the user in the form of directed image capture to guide the user through complex task, without the need for help screens or for the user to remember complicated key sequences. Finally, the present invention provides a method for displaying overlay bars that eliminates the need to re-decompress and display the image when the user turns-off the overlay bars, which increases the responsiveness of the camera.

Although the present invention has been described in accordance with the embodiments shown, one of ordinary skill in the art will readily recognize that there could be variations to the embodiments and those variations would be within the spirit and scope of the present invention. For example, the functions assigned to the soft keys, the number of soft keys, and the placement of the soft keys and labels in and around the display may vary. The method and system may also be implemented in digital imaging devices having only two modes, but that have multiple navigation screens within the "play mode" Accordingly, many modifications may be made by one of ordinary skill in the art without departing from the spirit and scope of the appended claims.

What is claimed is:

1. A method for controlling user interaction in a digital imaging device using dynamic overlay bars, the digital imaging device including a display, a first function key, and at least two operating modes for capturing, storing, and reviewing the images, the method comprising the steps of:

a) displaying mode-specific information on a first overlay bar that is displayed translucently over a current image in the display;

b) displaying a mode-specific function label corresponding to the first function key in a second overlay bar, wherein the mode-specific function label indicates which one of a plurality of predefined functions is assigned to the first function key;

c) dynamically changing the mode-specific information and the mode-specific function label during operation of the digital imaging device to automatically guide a user through operation of the digital imaging device; and

d) automatically changing the predefined function assigned to the first function key and the mode-specific function label based on conditions existing in the digital imaging device.

2. The method of claim **1** further including the step of:

e) manually changing the predefined function assigned to the first function key by pressing a menu key.

3. The method of claim **2** wherein step a) further includes the step of:

a1) providing the current image as a live view image during capture mode.

4. The method of claim **3** wherein step a) further includes the step of:

a2) providing the current image as a previously stored image.

5. The method of claim **4** wherein step b) further includes the step of:

b1) displaying the mode-specific function label as a combination of an icon and text.

6. A digital imaging device comprising:

an imaging device for capturing image data;

a memory coupled to the imaging device for storing the image data as captured images;

a display for displaying a captured image;

a processor coupled to the imaging device-and to the memory for controlling operation of the digital imaging device and for operating the imageing device in at least two operating modes;

at least one overlay bar displayed on the display, the at least one overlay bar including a translucent background and a combination of mode-specific status information and interactive instructions, wherein the interactive instructions automatically guide a user through a mode-specific operation; and

a set of soft keys, wherein the at least one overlay bar further displays soft key labels to indicate which one of a plurality of functions is assigned to the corresponding soft key, wherein in response to a user pressing a first one of the soft keys, the processor applies the function assigned to the first one of the soft keys to a first captured image.

7. A digital imaging device as in claim **6** wherein the at least one overlay bar is updated automatically based on conditions existing in the digital imaging device.

8. A digital imaging device as in claim **7** wherein the captured image is a live image displayed during a capture mode.

9. A digital imaging device as in claim **8** wherein the captured image is previously captured and stored image.

* * * * *

EXHIBIT 7

US006504575B1

(12) **United States Patent**
Ramirez et al.

(10) **Patent No.: US 6,504,575 B1**
(45) **Date of Patent: Jan. 7, 2003**

(54) **METHOD AND SYSTEM FOR DISPLAYING OVERLAY BARS IN A DIGITAL IMAGING DEVICE**

(75) Inventors: **Michael A. Ramirez**, Palo Alto, CA (US); **Eric C. Anderson**, San Jose, CA (US)

(73) Assignee: **FlashPoint Technology, Inc.**, Peterborough, NH (US)

(*) Notice: Subject to any disclaimer, the term of this patent is extended or adjusted under 35 U.S.C. 154(b) by 0 days.

(21) Appl. No.: **09/032,177**

(22) Filed: **Feb. 27, 1998**

(51) **Int. Cl.**[7] **H04N 5/222**
(52) **U.S. Cl.** **348/333.02**; 348/333.11
(58) **Field of Search** 348/207, 222, 348/239, 333.01, 333.02, 333.05, 333.11, 333.12, 333.04; 345/629; H04N 5/222

(56) **References Cited**

U.S. PATENT DOCUMENTS

5,949,432 A * 9/1999 Gough et al. 345/435
6,144,362 A * 11/2000 Kawai 345/115
6,310,648 B1 * 10/2001 Miller et al. 348/333.05

* cited by examiner

Primary Examiner—Tuan Ho
(74) *Attorney, Agent, or Firm*—Sawyer Law Group LLP

(57) **ABSTRACT**

A method and system for displaying an overlay bar on a digital imaging device is disclosed. First, text and graphic information to be displayed on the overlay bar are stored in an overlay bar buffer, and then displayed on a display screen. Thereafter, an image to be viewed is displayed on the display line-by-line. The lines of the image that are to be displayed within the area of an overlay bar are stored in a backstore buffer. Each line in the backstore buffer is then merged with its corresponding lines in the overlay bar buffer and displayed. The merging operation is performed by modifying the luminance value of each pixel of the image data that falls within the area of the overlay bar, and overwriting each pixel of image data that falls under a pixel of text in the overlay bar. This makes the overlay bar appear to the user to be translucent and makes the image appear as though it is sliding beneath the overlay bar as it is being displayed. When the user turns-off the overlay bars, only the portions of the image stored in the backstore buffer need be re-displayed to provide the original image, thus eliminating the need to re-display the entire image.

7 Claims, 11 Drawing Sheets

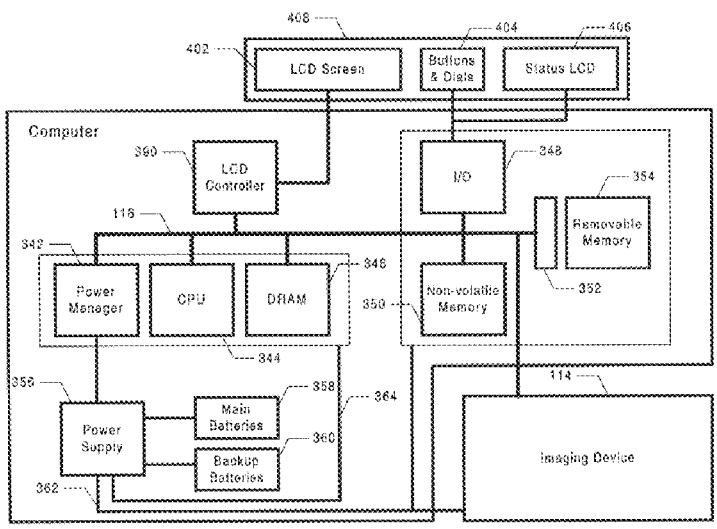

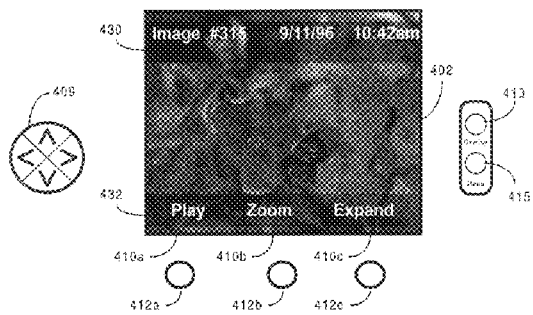

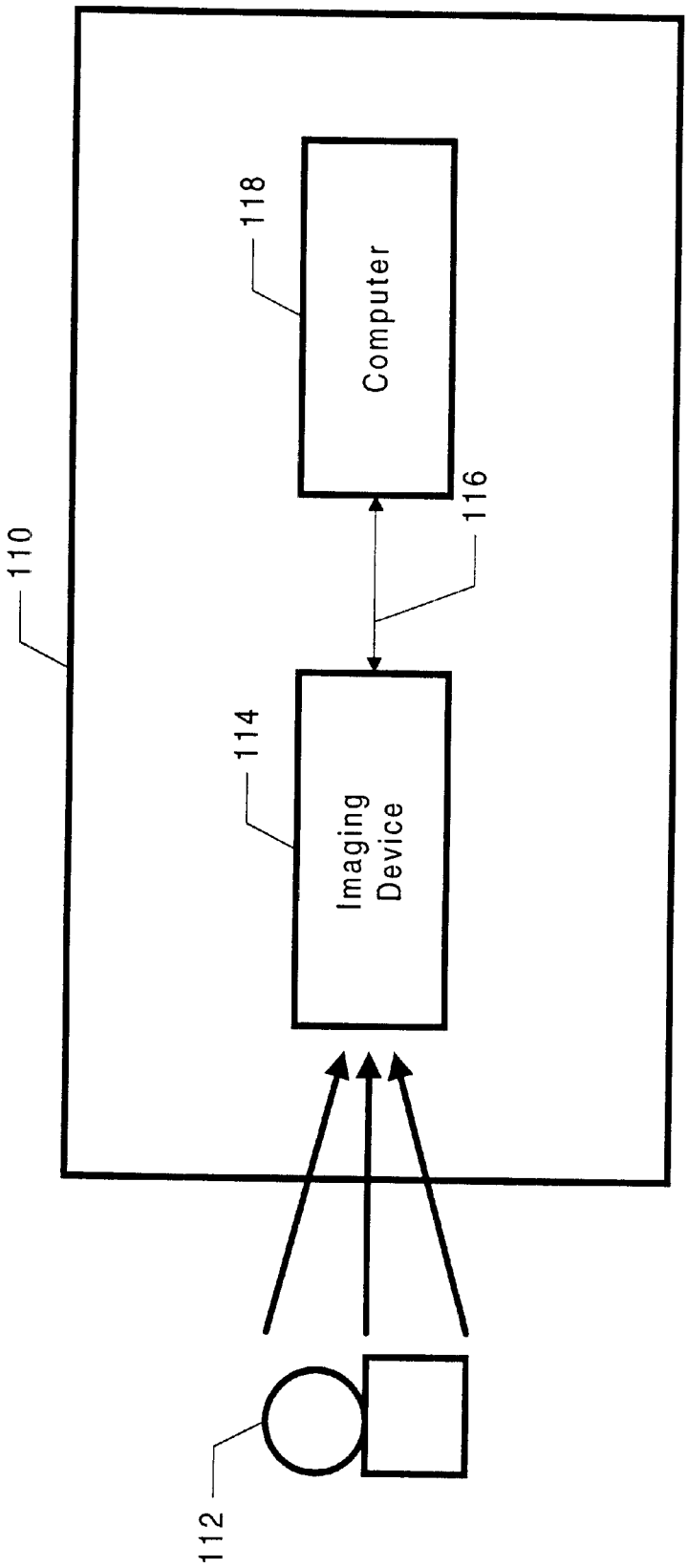

FIG. 1

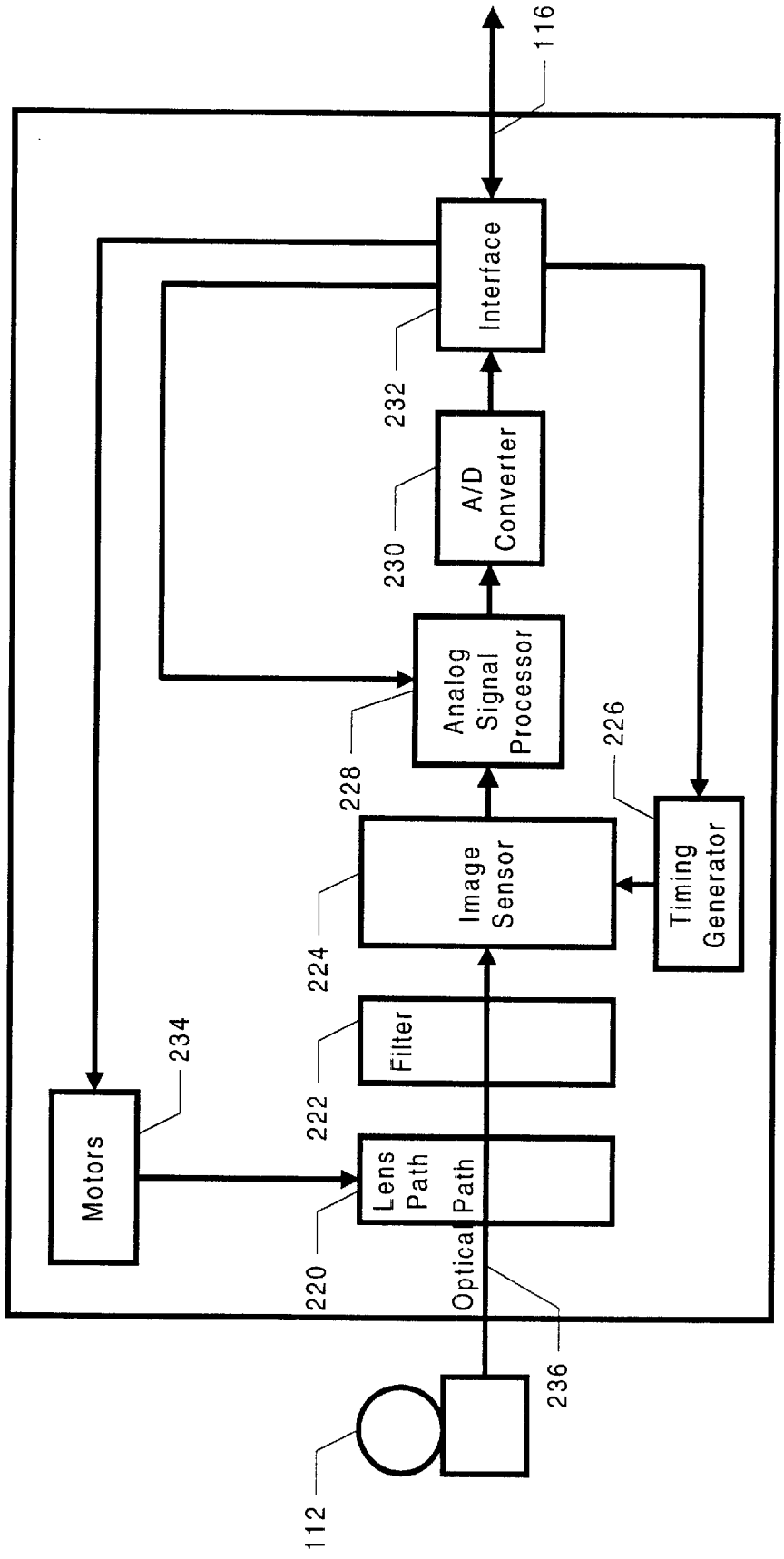
116
Interface
232
A/D Converter
230
Analog Signal Processor
228
226
Timing Generator
Image Sensor
224
Filter
222
234
Motors
Lens Path
Optical Path
220
236
112

FIG. 2

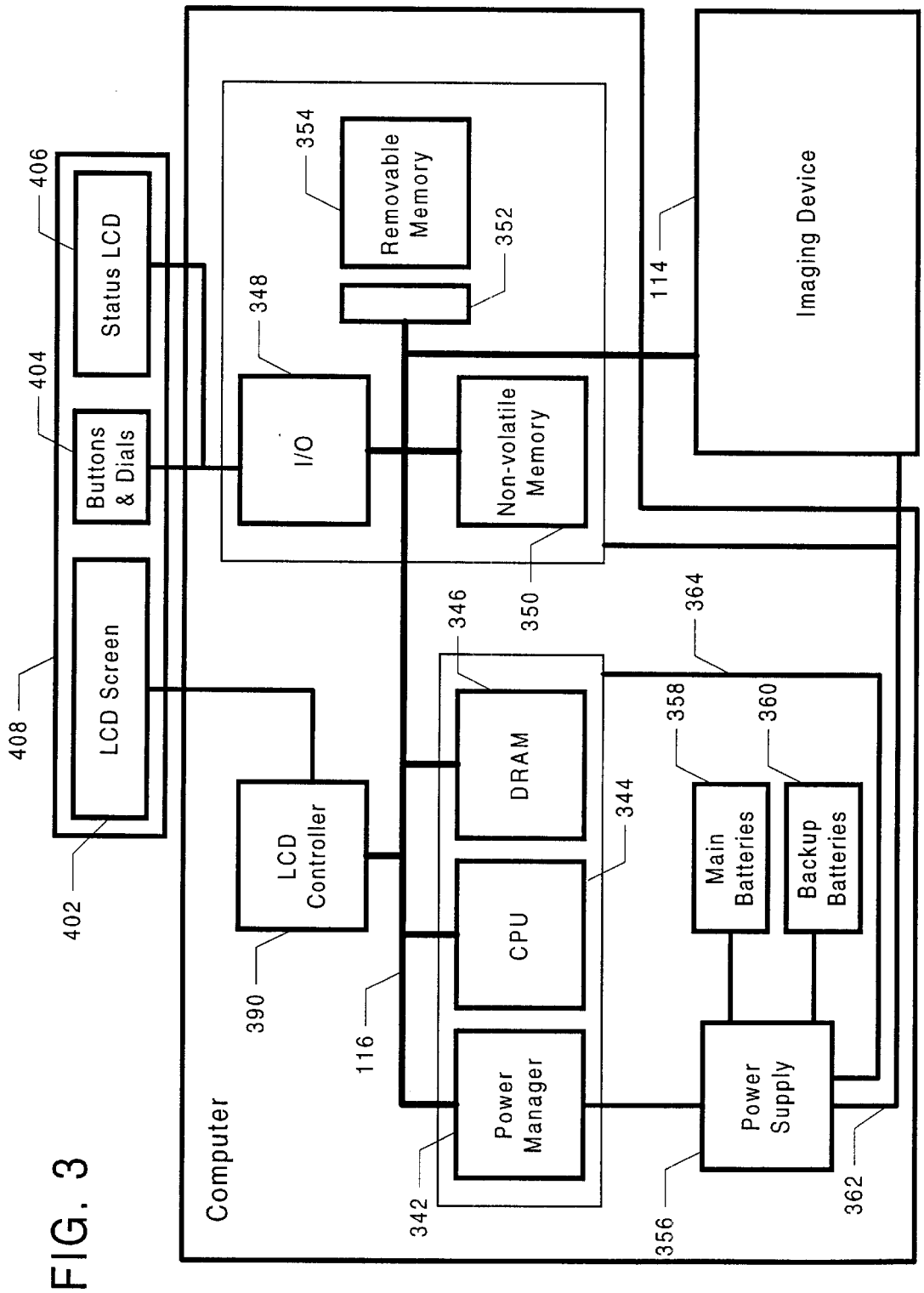
Status LCD
Buttons & Dials
LCD Screen
Removable Memory
I/O
Non-volatile Memory
Imaging Device
LCD Controller
DRAM
CPU
Power Manager
Main Batteries
Backup Batteries
Power Supply
Computer
402
404
406
408
114
116
342
344
346
348
350
352
354
356
358
360
362
364
390

FIG. 3

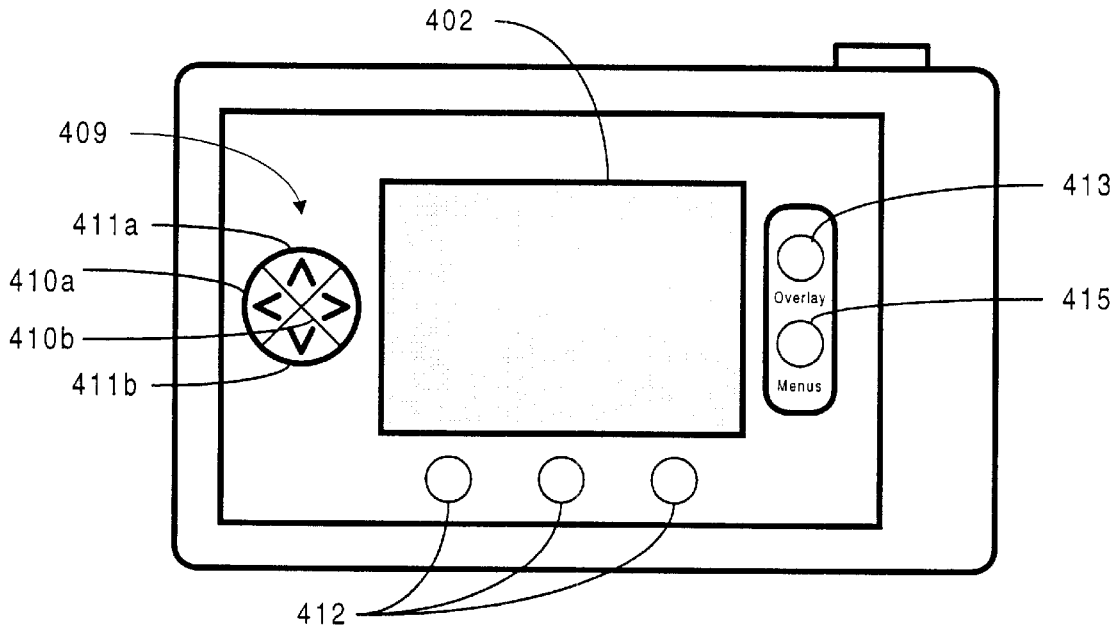
402
409
411a
410a
410b
411b
413
415
Overlay
Menus
412

FIG. 4

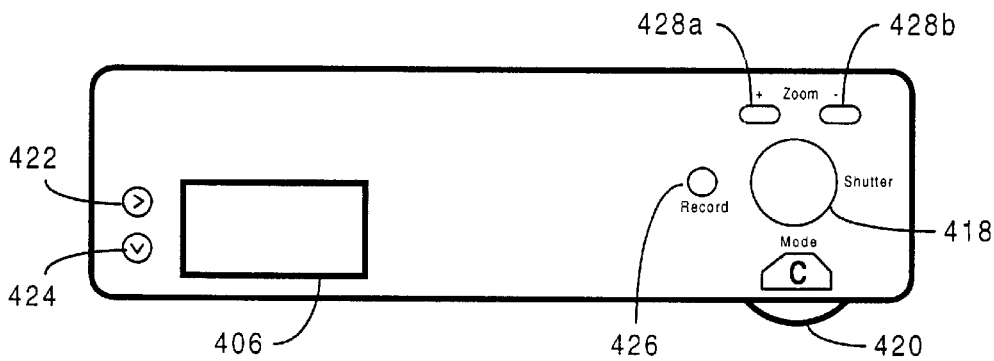
428a
428b
+ Zoom -
422
Record
Shutter
418
Mode
C
424
406
426
420

FIG. 5

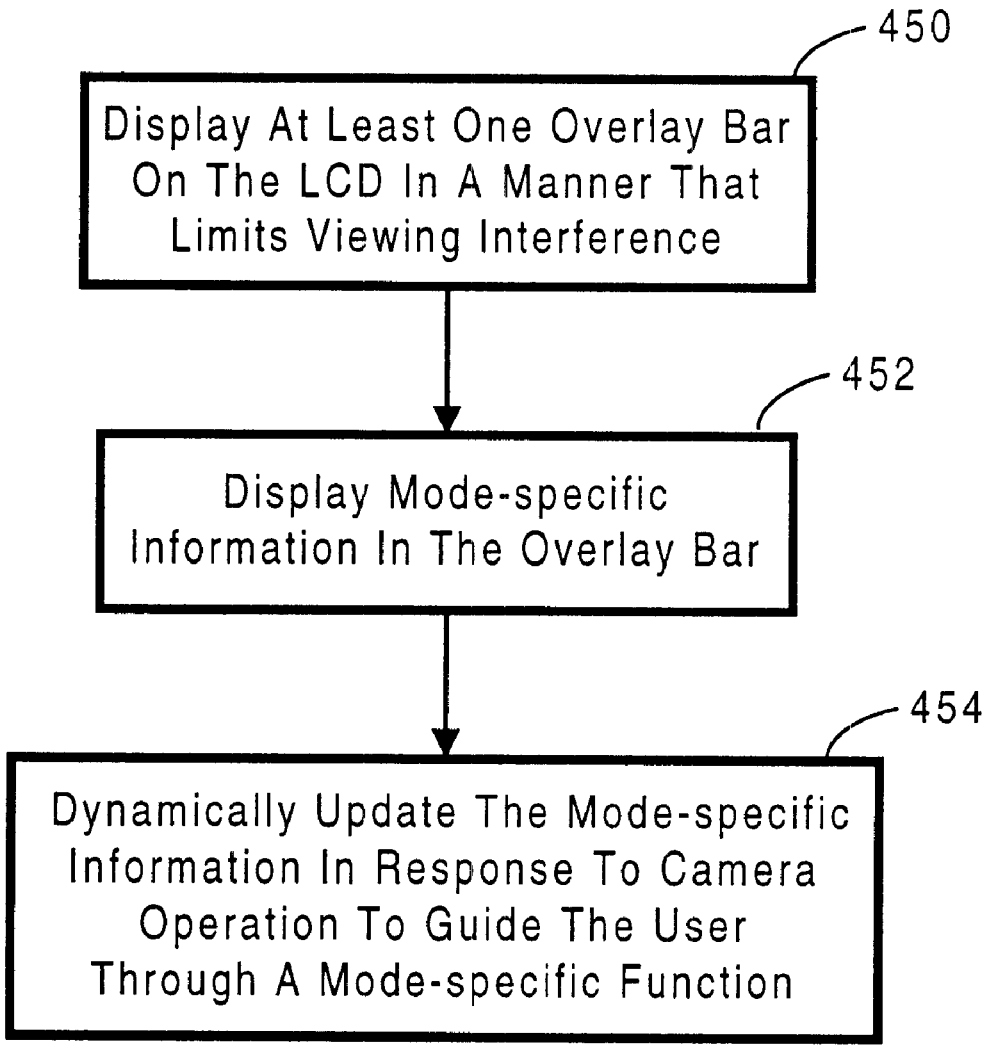
450
Display At Least One Overlay Bar On The LCD In A Manner That Limits Viewing Interference
452
Display Mode-specific Information In The Overlay Bar
454
Dynamically Update The Mode-specific Information In Response To Camera Operation To Guide The User Through A Mode-specific Function

FIG. 6

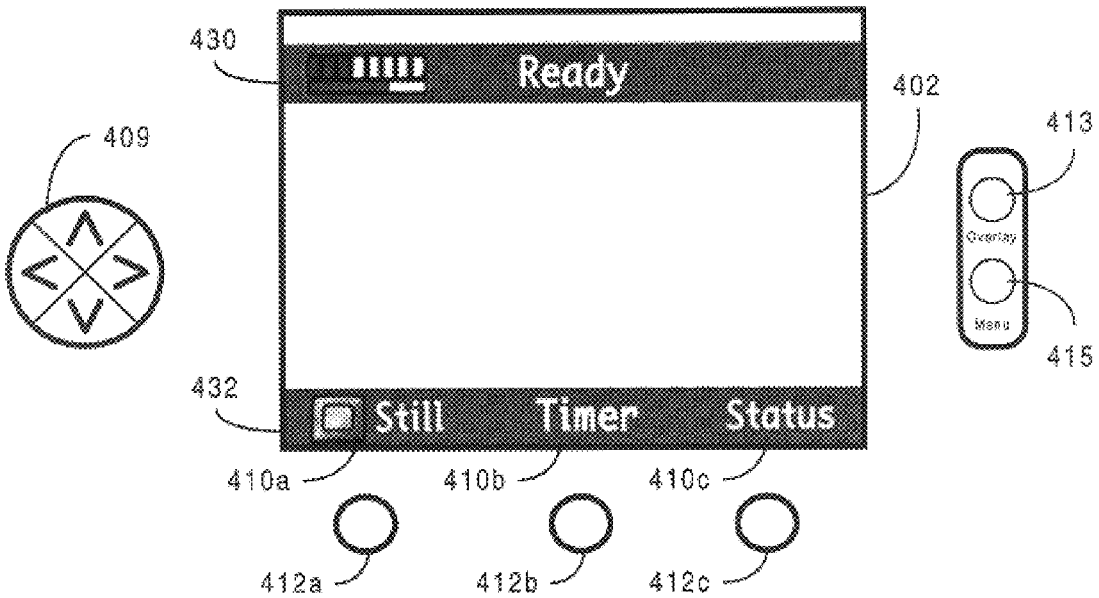
430
Ready
402
409
413
Overlay
Menu
415
432
Still
Timer
Status
410a
410b
410c
412a
412b
412c

FIG. 7A

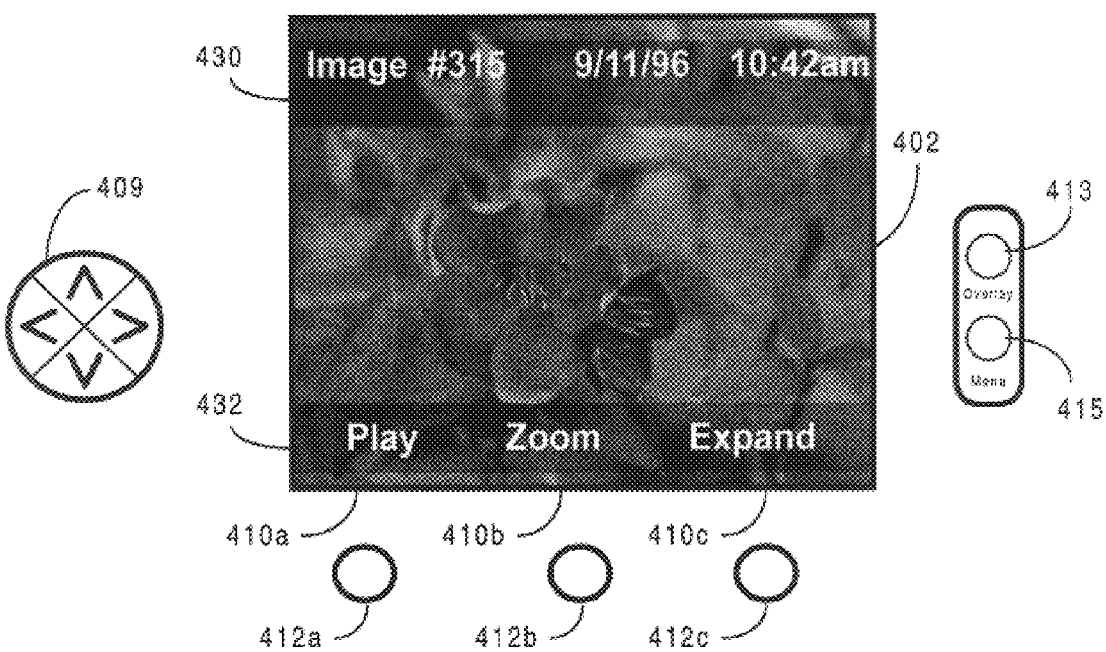
430
Image #315
9/11/96
10:42am
402
409
413
Overlay
Menu
415
432
Play
Zoom
Expand
410a
410b
410c
412a
412b
412c

FIG. 7B

FIG. 8A

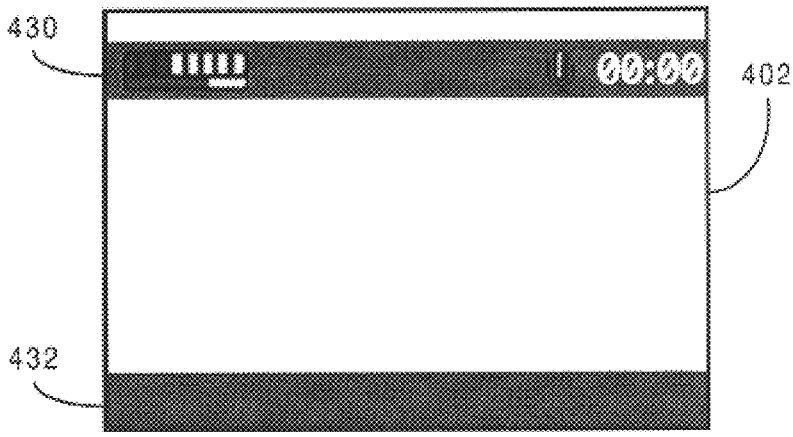

FIG. 8B

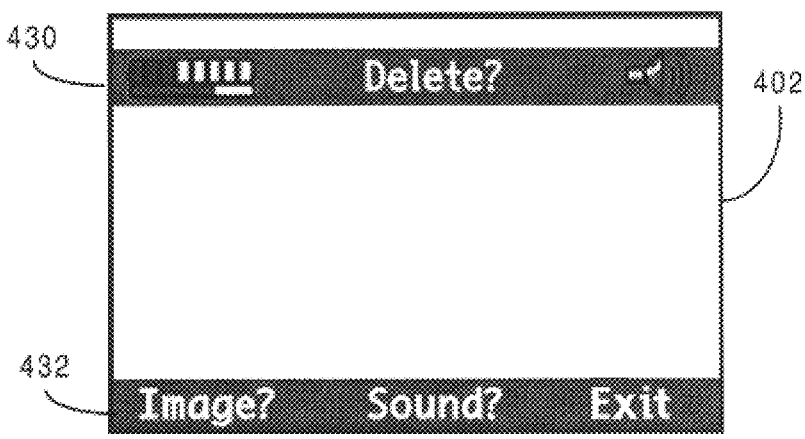

FIG. 8C

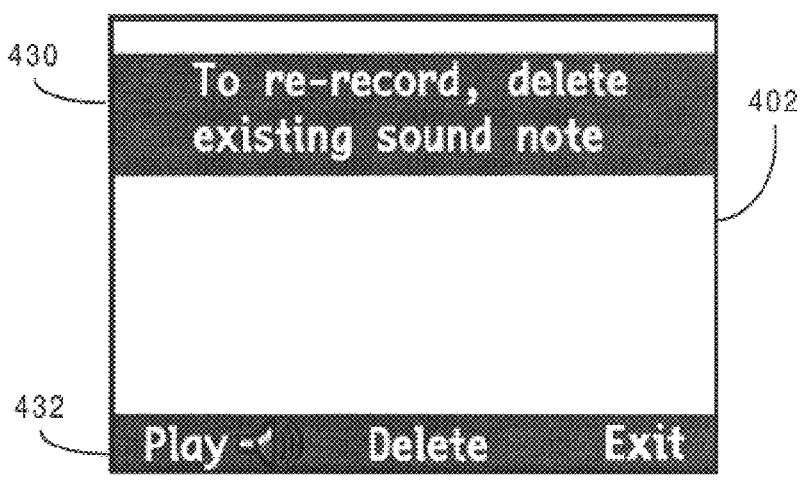

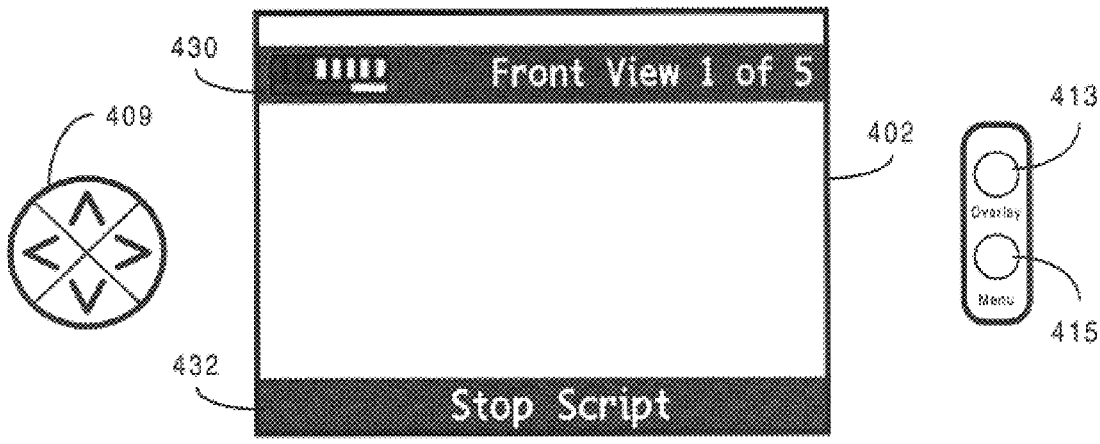
430
Front View 1 of 5
409
402
413
Overlay
Menu
415
432
Stop Script

FIG. 9A

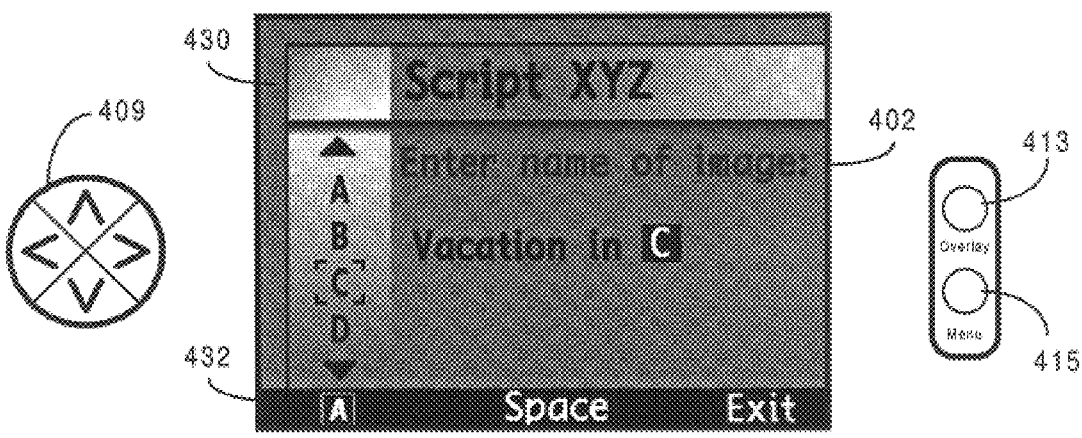
430
Script XYZ
409
402
Enter name of image:
A
B
C
D
Vacation in C
413
Overlay
Menu
415
432
A
Space
Exit

FIG. 9B

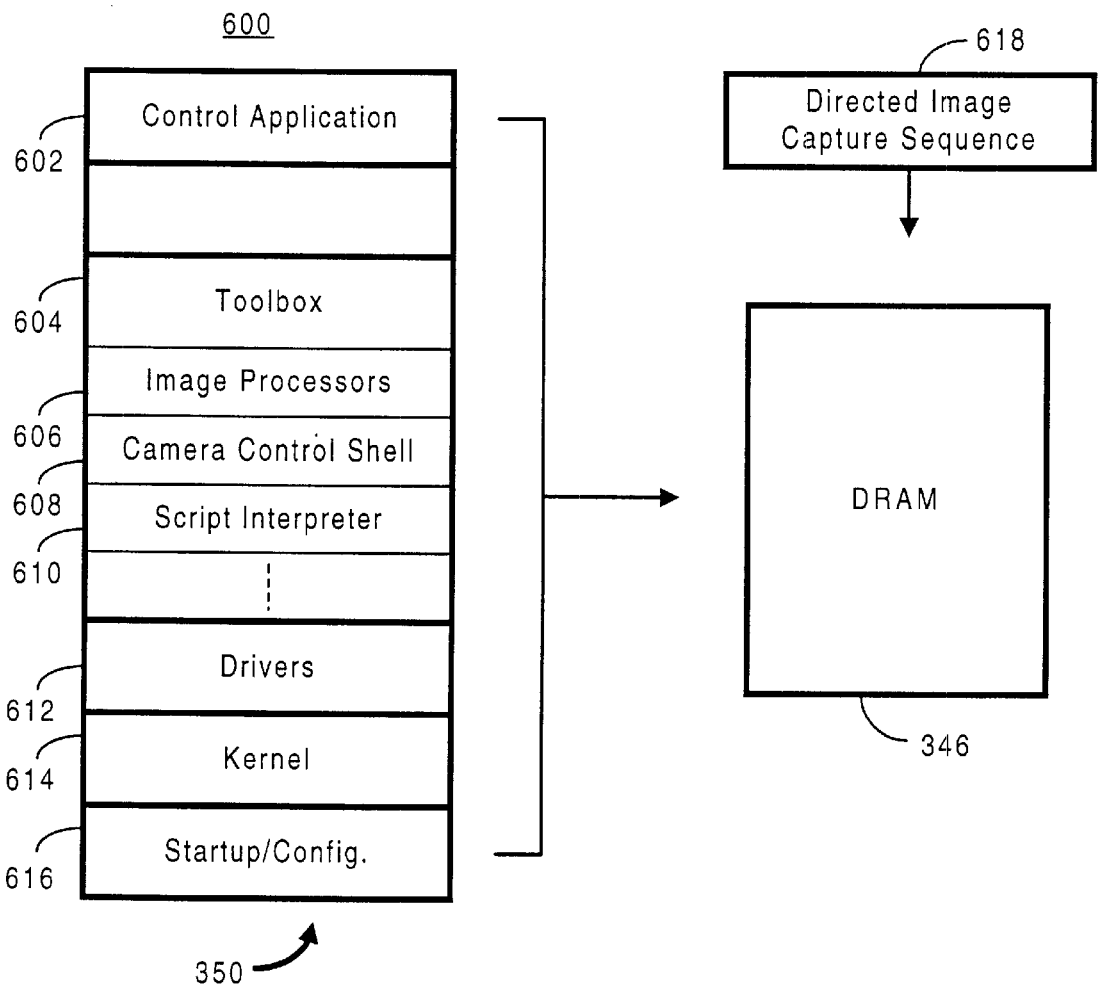
600
Control Application
602
Toolbox
604
Image Processors
606
Camera Control Shell
608
Script Interpreter
610
Drivers
612
Kernel
614
Startup/Config.
616
350
618
Directed Image Capture Sequence
DRAM
346

FIG. 10

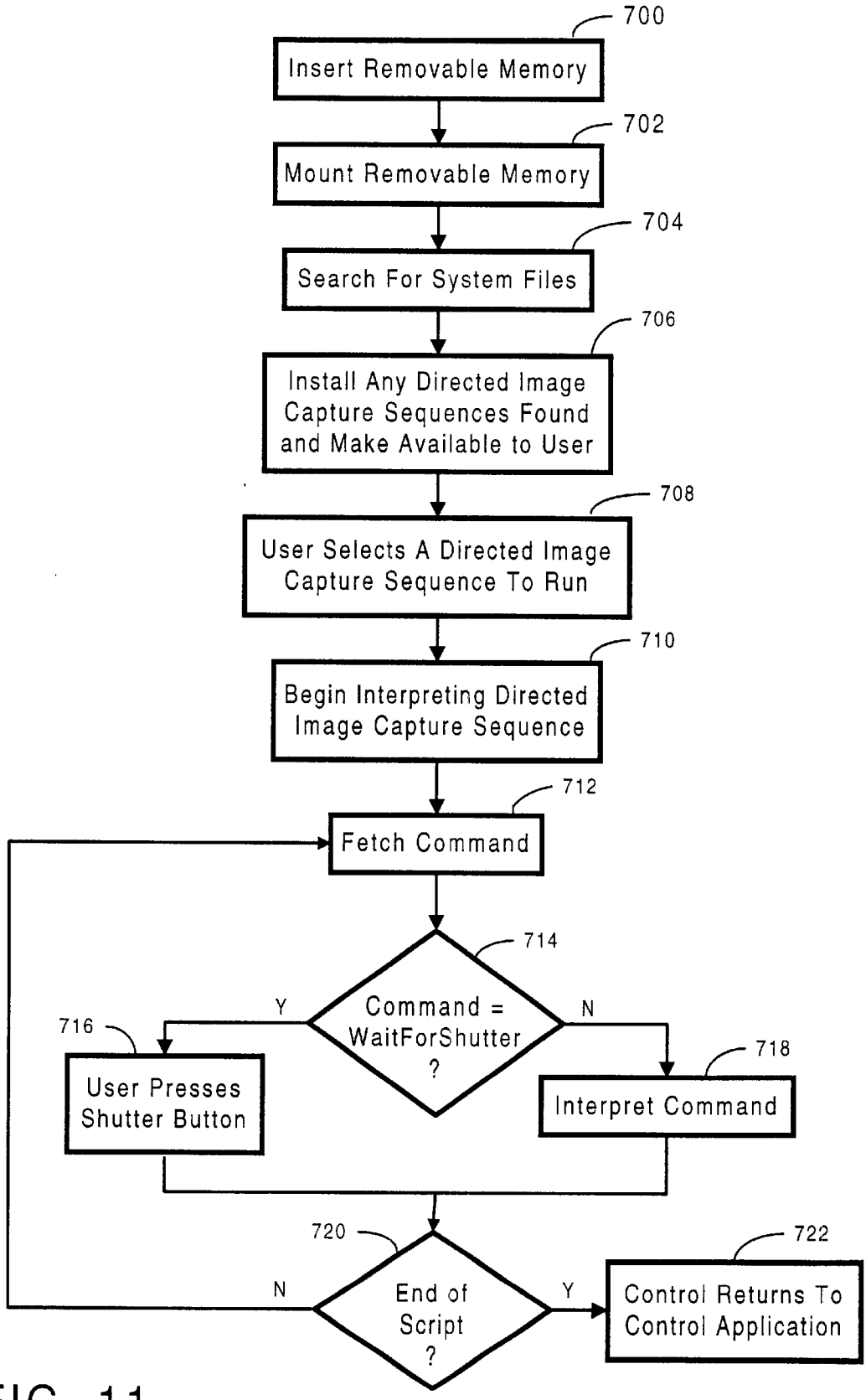
700
Insert Removable Memory
702
Mount Removable Memory
704
Search For System Files
706
Install Any Directed Image Capture Sequences Found and Make Available to User
708
User Selects A Directed Image Capture Sequence To Run
710
Begin Interpreting Directed Image Capture Sequence
712
Fetch Command
714
Command = WaitForShutter ?
Y
N
716
User Presses Shutter Button
718
Interpret Command
720
End of Script ?
N
Y
722
Control Returns To Control Application

FIG. 11

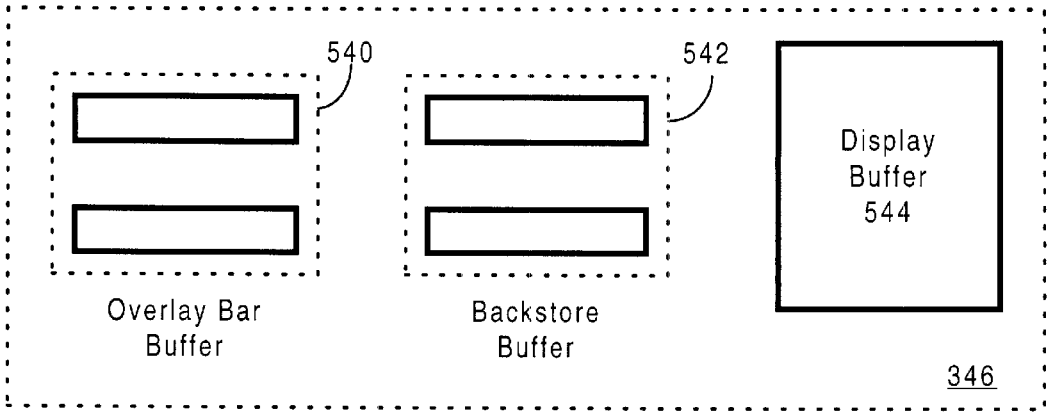

FIG. 12A

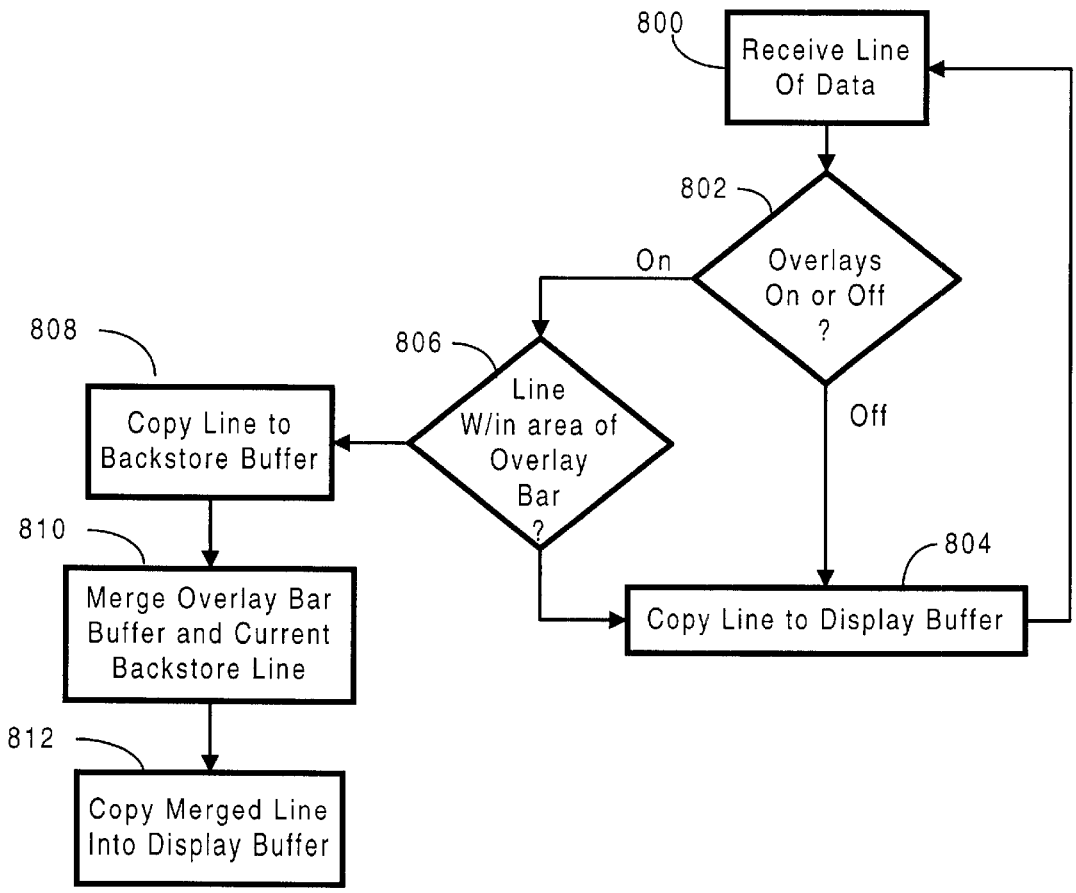

FIG. 12B

METHOD AND SYSTEM FOR DISPLAYING OVERLAY BARS IN A DIGITAL IMAGING DEVICE

CROSS-REFERENCE TO RELATED APPLICATIONS

This application is related to U.S. patent application Ser. No. 09/082172 entitled "Method And System For Controlling User Interaction In A Digital Imaging Device Using Dynamic Overlay Bars" (P135), and U.S. patent application Ser. No. 09/032659 entitled "Directing Image Capture Sequences In A Digital Imaging Device Using Scripts" (P165), which were filed on the same date as the present application.

FIELD OF THE INVENTION

The present invention relates generally to digital imaging devices, including digital cameras, and more particularly to a method and system for displaying overlay bars in a digital imaging device.

BACKGROUND OF THE INVENTION

Most digital cameras today are similar in size to and behave like conventional point-and-shoot cameras. Unlike conventional cameras, however, most digital cameras store digital images in an internal flash memory or on external memory cards, and some are equipped with a liquid-crystal display (LCD) screen on the back of the camera. Through the use of the LCD, most digital cameras operate in two modes, record and play, although some only have a record mode.

In record mode, which is also referred to as capture mode, the LCD acts as a live viewfinder in which the user may view an object or scene before taking a picture, similar to the LCD on a camcorder. When the user presses the shutter button, whatever scene is shown on the LCD is captured as a still image. Besides capturing still images, some digital cameras can be set to capture other image types, such as burst and time-lapse images. A burst image is a series of still images captured in rapid succession, while a time-lapse image is series of still images taken at regular intervals over a longer time period.

In play mode, the LCD acts as a playback screen for reviewing the previously captured images. Typically, several small images are displayed on the LCD at once, and by selecting one of the images the user may then display the full-sized version of the images in the LCD.

Although conventional digital cameras are more convenient for the user to use than film cameras due to instant play back of captured images, there are several drawbacks in the user interface that restrict user interaction with the camera. When capturing images, for example, it is often helpful for the user to be informed about the current settings or operational state of the camera, such as whether the flash is on/off, and the current image type setting, for instance.

In conventional digital cameras, such status information is typically displayed as text blocks or accessed through a status screen or the like. The disadvantage with the text blocks is that they are typically small (10–15 characters in length), and therefore, the amount of status information they can provide is very limited. Typically, text blocks are used to display information such as the current image number. Moreover, when text blocks are displayed with a solid color background, the background obscures that portion of the image. And when text blocks are displayed with no background (only text), the text is difficult to distinguish from the colors comprising the image, making the text hard to read.

The disadvantage with status screens is that in order to view the status information, the image currently displayed on the LCD must be replaced with the status screen, causing the user to loose sight of the image. Another approach would be to shrink the display area of the LCD and add a black status area in the viewfinder, as done in optical viewfinders of film cameras. This, however, would shrink the size of images displayed in the viewfinder.

Another drawback with conventional digital cameras is that as technological advances are made, digital cameras are continually provided with more features and functions, which make them more complex for the user to interact with. This is similar to what occurs with PC software, which increasingly grows larger and harder to use. PC developers attempt to alleviate this problem by providing more and larger help menus. Each help menu usually opens in its own window with paragraphs of scrolling text.

Using PC help menus in a digital camera to guide user interaction through the camera features and functions would be less than ideal because of the limited size of the camera LCD. And assuming help menus were displayed, they would either obscure whatever image was being displayed or otherwise total replace it, which is disadvantageous to the picture taker.

Accordingly, what is needed is an improved system and method for displaying status information in a manner that does not obscure the display of the current object in the LCD, and for controlling user interaction in a digital imaging device. The present invention addresses such a need.

SUMMARY OF THE INVENTION

The present invention provides a method and system for controlling user interaction in a digital imaging device having a display using dynamic overlay bars. The digital imaging device includes at least two operating modes, where each of the operating modes has at least one mode-specific operation that can be performed on images. In response to operating in either of the operating modes, the digital imaging device displays a translucent overlay bar on the display that is dynamically updated with status information and interactive instructions that guide the user through the mode-specific operations.

In a second aspect of the present invention, the interactive instructions are implemented using a script, which is a text-based program that may be easily written by the user and externally loaded into the camera. Once loaded into the camera, the commands comprising the script are translated and executed one-by-one by a script interpreter to guide the user through the newly provided function.

A third aspect of the present invention, provides a method and system for displaying overlay bars on the display. First, text and graphic information to be displayed on the overlay bars are stored in an overlay bar buffer, and then displayed on the display. Thereafter, the current image is displayed on the display line-by-line. The lines of the image that will be displayed within the area of an overlay bar are stored in a backstore buffer. Each line in the backstore buffer is merged with its corresponding lines in the overlay bar buffer and displayed. This aspect of the present invention makes the overlay bars appear translucent, and the image appear as though it is sliding beneath the overlay bars as it is being displayed. When the user turns-off the overlay bars, only the portions of the image stored in the backstore buffer need be re-displayed to provide the original image, thus eliminating the need to re-display the entire image.

Accordingly, the method and system of the present invention provides status information to a user and allows the user to perform complex camera functions and features to the images with minimum effort, while allowing for easy viewing of the images. Displaying interactive instructions on dynamic overlay bars to guide the user through complex tasks in accordance with the present invention eliminates the need for help screens and for the user to remember complicated key sequences, and increases the ease of use and operation of the digital camera. The manner in which the overlay bars and the image is displayed makes the user interface more aesthetically pleasing, while increasing the display speed of the digital imaging device.

BRIEF DESCRIPTION OF THE DRAWINGS

FIG. **1** is a block diagram of a digital camera that operates in accordance with the present invention.

FIG. **2** is a block diagram of an example embodiment for the imaging device of FIG. **1**.

FIG. **3** is a block diagram of an example embodiment for the computer of FIG. **1**.

FIGS. **4** and **5** are diagrams depicting the preferred embodiment of the camera's **110** user interface.

FIG. **6** is a flow chart is shown illustrating the process of controlling user interaction in a digital imaging device using dynamic overlay bars in accordance with the present invention.

FIGS. **7**A and **7**B are diagrams illustrating the use of dynamic overlay bars on the LCD screen during capture and play modes, respectively.

FIGS. **8**A through **8**C are diagrams illustrating how the overlay bars may be used to guide the user through a recording of a sound annotation.

FIGS. **9**A and **9**B are diagrams illustrating example directed image capture screens.

FIG. **10** is a block diagram illustrating the camera software, which is stored in ROM, and DRAM, where the software is executed.

FIG. **11** is a flow chart illustrating an exemplary process of installing and running a script-based directed image capture in a preferred embodiment of the present invention.

FIG. **12**A is a diagram illustrating a memory buffer organization for displaying overlay bars.

FIG. **12**B is a flow chart illustrating the process of displaying overlay bars on the LCD in accordance with the present invention.

DETAILED DESCRIPTION OF THE INVENTION

The present invention relates to an improved method and system for displaying overlay bars in a digital imaging device. The following description is presented to enable one of ordinary skill in the art to make and use the invention and is provided in the context of a patent application and its requirements. Although the present invention will be described in the context of a digital camera, various modifications to the preferred embodiment will be readily apparent to those skilled in the art and the generic principles herein may be applied to other embodiments. That is, any digital imaging device which displays images, icons and/or other items, could incorporate the features described herein below and that device would be within the spirit and scope of the present invention. Thus, the present invention is not intended to be limited to the embodiment shown but is to be accorded the widest scope consistent with the principles and features described herein.

The present invention is a method and system for displaying dynamic overlay bars in a digital imaging device. According to the present invention, both status information and interactive instructions are displayed on dynamic overlay bars to enable a user to perform complex camera functions and apply features to the images with minimum effort, while allowing for easy viewing of the images.

Referring now to FIG. **1**, a block diagram of a digital camera **110** is shown for use in accordance with the present invention. Camera **110** preferably comprises an imaging device **114**, a system bus **116** and a computer **118**. Imaging device **114** is optically coupled to an object **112** and electrically coupled via system bus **116** to computer **118**. Once a photographer has focused imaging device **114** on object **112** and, using a capture button or some other means, instructed camera **110** to capture an image of object **112**, computer **118** commands imaging device **114** via system bus **116** to capture raw image data representing object **112**. The captured raw image data is transferred over system bus **116** to computer **118** which performs various image processing functions on the image data before storing it in its internal memory. System bus **116** also passes various status and control signals between imaging device **114** and computer **118**.

Referring now to FIG. **2**, a block diagram of an example embodiment of imaging device **114** is shown. Imaging device **114** typically comprises a lens **220** having an iris, a filter **222**, an image sensor **224**, a timing generator **226**, an analog signal processor (ASP) **228**, an analog-to-digital (A/D) converter **230**, an interface **232**, and one or more motors **234**.

In operation, imaging device **114** captures an image of object **112** via reflected light impacting image sensor **224** along optical path **236**. Image sensor **224**, which is typically a charged coupled device (CCD), responsively generates a set of raw image data in CCD format representing the captured image **112**. The raw image data is then routed through ASP **228**, A/D converter **230** and interface **232**. Interface **232** has outputs for controlling ASP **228**, motors **234** and timing generator **226**. From interface **232**, the raw image data passes over system bus **116** to computer **118**.

Referring now to FIG. **3**, a block diagram of an example embodiment for computer **118** is shown. System bus **116** provides connection paths between imaging device **114**, an optional power manager **342**, central processing unit (CPU) **344**, dynamic random-access memory (DRAM) **346**, input/output interface (I/O) **348**, non-volatile memory **350**, and buffers/connector **352**. Removable memory **354** connects to system bus **116** via buffers/connector **352**. Alternately, camera **110** may be implemented without removable memory **354** or buffers/connector **352**.

Power manager **342** communicates via line **366** with power supply **356** and coordinates power management operations for camera **110**. CPU **344** typically includes a conventional processor device for controlling the operation of camera **110**. In the preferred embodiment, CPU **344** is capable of concurrently running multiple software routines to control the various processes of camera **110** within a multithreaded environment. DRAM **346** is a contiguous block of dynamic memory which may be selectively allocated to various storage functions. LCD controller **390** accesses DRAM **346** and transfers processed image data to LCD screen **402** for display.

I/O **348** is an interface device allowing communications to and from computer **118**. For example, I/O **348** permits an

external host computer (not shown) to connect to and communicate with computer **118**. I/O **348** also interfaces with a plurality of buttons and/or dials **404**, and an optional status LCD **406**, which in addition to the LCD screen **402**, are the hardware elements of the camera's user interface **408**.

Non-volatile memory **350**, which may typically comprise a conventional read-only memory or flash memory, stores a set of computer-readable program instructions to control the operation of camera **110**. Removable memory **354** serves as an additional image data storage area and is preferably a non-volatile device, readily removable and replaceable by a camera **110** user via buffers/connector **352**. Thus, a user who possesses several removable memories **354** may replace a full removable memory **354** with an empty removable memory **354** to effectively expand the picture-taking capacity of camera **110**. In the preferred embodiment of the present invention, removable memory **354** is typically implemented using a flash disk.

Power supply **356** supplies operating power to the various components of camera **110**. In the preferred embodiment, power supply **356** provides operating power to a main power bus **362** and also to a secondary power bus **364**. The main power bus **362** provides power to imaging device **114**, I/O **348**, non-volatile memory **350** and removable memory **354**. The secondary power bus **364** provides power to power manager **342**, CPU **344** and DRAM **346**.

Power supply **356** is connected to main batteries **358** and also to backup batteries **360**. In the preferred embodiment, a camera **110** user may also connect power supply **356** to an external power source. During normal operation of power supply **356**, the main batteries **358** provide operating power to power supply **356** which then provides the operating power to camera **110** via both main power bus **362** and secondary power bus **364**. During a power failure mode in which the main batteries **358** have failed (when their output voltage has fallen below a minimum operational voltage level) the backup batteries **360** provide operating power to power supply **356** which then provides the operating power only to the secondary power bus **364** of camera **110**.

FIGS. **4** and **5** are diagrams depicting the preferred hardware components of the camera's **110** user interface **408**. FIG. **4** is back view of the camera **110** showing the LCD screen **402**, a four-way navigation control button **409**, an overlay button **413**, a menu button **414**, and a set of programmable soft keys **416**. FIG. **5** is a top view of the camera **110** showing a shutter button **418**, and a mode dial **420**. The camera may optionally include status LCD **406**, status LCD scroll and select buttons **422** and **424**, a sound record button **426**, and zoom-in, zoom-out buttons **428***a* and **428***b*.

The digital camera of the present invention is controlled by graphical-user-interface (GUI) based operating system (OS), which is in contrast to conventional digital cameras that are controlled by proprietary hardware architectures. In the preferred embodiment of the present invention, the OS provides the digital camera with several different operating modes for supporting various camera functions. Although the digital camera may include several different operating modes, the modes relevant to this description are capture mode, and play mode.

In capture mode, the camera **100** supports the actions of preparing to capture an image, and capturing an image through the use of either the LCD screen **402** or the status LCD **406**. In play mode, the camera **110** supports the actions of displaying full-sized views of captured images, and play-backing various media types associated with the images, such as sound. The user may switch between the various modes, using the mode dial **420**. When the camera is placed into a particular mode, that mode's default screen appears in the LCD screen **402** in which a set of mode-specific items, such as images, icons, and text, are displayed.

The present invention provides a method and system for controlling user interaction in a digital imaging device using dynamic overlay bars. According to the present invention, the dynamic overlay bars are used to provide the user with both status information and interactive instructions. The interactive instructions are automatically updated in response to normal camera operations to guide the user through predefined operations of the camera, thus making the device extremely easy to use. In addition, the manner in which the dynamic overlay bars are displayed reduces viewing interference with the currently displayed object.

Referring now to FIG. **6**, a flow chart is shown illustrating the process of controlling user interaction in a digital imaging device using dynamic overlay bars in accordance with the present invention. The process begins by displaying an image on the LCD screen **402** along with at least one overlay bar that provides a dynamic prompt area in a way that minimizes viewing interference with the displayed image in step **450**.

In a preferred embodiment, viewing interference is minimized by positioning the overlay bar along an edge of the LCD screen **402** and by displaying the background of the bar translucently so that the user may see the image through the overlay bar. The overlay bar may also be displayed with a solid color background, but this is less desirable since the bar would overwrite that portion of the image.

In response to the camera being placed into one of the operating modes, the overlay bar displays mode-specific information for the user in step **452**. In a preferred embodiment, the mode-specific information displayed on the overlay bar includes a combination of static status information, dynamically updated soft key labels, and interactive instructions pertaining to the particular mode, as described further below. After the mode-specific information is displayed, the mode-specific information is then dynamically updated during the operation of the camera to guide the user through a mode-specific function in step **454**.

To more particularly describe the present invention, refer to FIGS. **7**A and **7**B illustrating the use of dynamic overlay bars on the LCD screen **402** during two different operating modes of the digital camera **110**. As shown, in a preferred embodiment of the present invention, two overlay bars **430** and **432** are simultaneously displayed on the LCD screen **402**, rather than one, to strike a balance between the amount of information provided to the user and the amount of screen area consumed by text and/or graphics.

Overlay bar **430** may be used primarily to display status information and interactive instructions, while overlay bar **432** may be used primarily to display soft key labels **410** corresponding to soft keys **412**. Both overlay bars **430** and **432** may be turned-off in each of the camera operating modes by pressing the overlay "on/off" button **413** so that users can have an unobstructed view of images it they so choose (off), or extra help in operating the camera (on).

Referring to FIG. **7**A, the display of the overlay bars **430** and **432** on the LCD screen **402** during capture mode is shown. In capture mode, the camera **110** supports the actions of preparing to capture an image, and capturing an image through the use of either the LCD screen **402** alone or with the aid of an optional optical viewfinder (not shown).

Overlay bar **430** is updated with capture status information during capture mode, which may include a graphic memory gauge, and text indicating the state of the camera (Ready), for example. The memory gauge provides the user with a constant overview of camera memory usage in terms of disk space, and may also show working memory usage. In a preferred embodiment, the memory bar displays disk space usage as segments filling-up, and displays working memory usage as the bar below those segments, which is constantly updated to reflect current memory status. When the working memory buffers are empty, the bottom part of the bar would be clear. When there is the equivalent of storage for only a few pictures left, the storage gauge may flash and the overlay bar **430** may be updated with a message, such as "Storage Almost Full". If a user tries to take a picture without adequate storage, then the overlay bar **430** may be updated to reflect this status by displaying the message "Inadequate Storage," along with an optional sound from the camera.

The overlay bar **430** may also be updated to reflect other types of capture status information and may be expanded into additional lines if needed. The additional capture status information could include the following: 1) Low Battery Indication—when main batteries run low, a battery icon may replace the storage gauge and a overlay bar **430** may be updated to flash "Battery Low"; 2) Shake Warning Indication—when light level is too low for recommended hand held operation and user has disabled the strobe system "Shake Warning" may be displayed in the overlay bar **430**; and 3) No Focus Indication—when the focus system cannot adequately focus the camera lens, a "No Focus" may be displayed in the overlay bar **430**.

Referring now to FIG. **7**B, the display of the overlay bars **430** and **432** on the LCD screen **402** during play mode is shown. In a preferred embodiment, the play screen layout displays one full-sized image at a time and the user may chronologically scroll through the full-sized images in the LCD screen **402** using the left/right buttons on four-way navigation control button **409**. Users can also play back various media types, such as time-lapse, bursts and slide show images according to either default or user defined play back rates.

In the play mode, overlay bar **430** displays status information relating to the current image being displayed, such as the image name/number, and the date and time of capture. The status information may also include graphical icons indicating what category of images the image belongs to and the image type.

Referring to both FIGS. **7**A and **7**B, besides displaying status information, the second use of the dynamic overly bars of the present invention is to display soft key labels **410** for soft keys **412**. As described in U.S. patent application Ser. No. 08/939,993 filed on Sept. 26, 1997, entitled "A Method And System For Manipulating Images Stored In A Digital Imaging Device," assigned to the present assignee and hereby incorporated by reference, soft keys **412***a*, **412***b*, and **412***c*of the user interface **400** are programmable, i.e., they may be assigned predefined functions. The function currently assigned to a respective soft key **412** is indicated by the soft key labels **410***a*, **410***b*, and **410***c* displayed in overlay bar **432**. After a soft key label **410** has been displayed, the user may then press the corresponding soft key **412** to have the function indicated by its label applied to the current image.

Referring to FIG. **7**B for example, the function assigned to the soft key **412***b* in during play mode is a "Zoom" function, which allows a user to zoom in and out of a displayed image. When the user zooms-in on an image by pressing the soft key **412***b*, the "Zoom" soft key label **410***b* is changed to "Zoom-out". While an image is zoomed, the user may pan around the image using the four-way control button **406**.

The functions assigned to the soft keys **412**, and thus the soft key labels **410**, are changed in response to several different factors. The soft keys **412** may change automatically either in response to user actions, or based on predetermined conditions existing in the camera, such as the current operating mode, the image type, and so on. The soft keys **412** may also be changed manually by the user by pressing the menu button **415**. Providing programmable soft keys **412** increases the number of functions that may be performed by the camera, while both minimizing the number of buttons required on the user interface, and reducing the need to access hierarchical menus.

As stated above, in addition to displaying status information and soft key labels, the dynamic overlay bars of the present invention may also be used to display interactive instructions to the user to guide user through camera functions. Basic types of camera functions include reviewing captured images, deleting images, annotating images with sound, and capturing groups of related images. With conventional cameras, the user would have to memorize complicated key sequences in order to perform these functions.

The present invention, in contrast, uses the dynamic overlay bars to display interactive instructions that guide the user through operations such as adding sound to an image, deleting images and/or sound, and capturing groups of related images. As described in U.S. patent application Ser. No. 08/939,993, for example, after the user has captured an image and the image is displayed for review, the overlay bar **432** automatically reminds the user that he or she has the option to delete the image. That is, one of the soft key labels **410** is changed to "Delete" and the user may then delete image by pressing the corresponding "Delete" soft key **412**.

Referring now to FIGS. **8**A through **8**C, diagrams illustrating how the overlay bars may be used to guide the user through a recording of a sound annotation are shown. The user may initiate the sound annotation function by pressing the record button **426** (see FIG. **5**) while an image is displayed. In response, a record indication, such as a microphone icon, is automatically displayed in overlay bar **430** along with a display of the duration of the recording, as shown in FIG. **8**A. After the sound annotation is recorded, the soft key labels **410** may be updated to display three options "Play", "Delete", and "Save"; where "Play" plays back the recorded sound, "Delete" deletes the recorded sound, and "Save" saves the recorded sound.

If the user is reviewing images in play or review modes, it is possible that the displayed image will have a sound annotation attached. Should the user presses the "Delete" soft key **412**, it is unclear what operation the user wishes to perform: delete the image, delete only the sound, or delete both. Indeed, an inexperienced user may not even consider all three of these possibilities before pressing the "Delete" button. Therefore, to guide the user through this operation, the dynamic overlay bars **430** and **432** are updated to prompt the user whether the image or the sound annotation is to be deleted, as shown in FIG. **8**B. The user may then indicate which is to be deleted by pressing the corresponding soft key **412**.

While reviewing images, it is also possible that the user may press the record button **426**. If the current image already

includes a sound annotation, then it is unclear whether the user wishes to record a new sound annotation over the old one, or whether the user is unaware of the existing sound annotation. Therefore, to make sure the user doesn't inadvertently overwrite the existing sound, the overlay bar **430** is automatically updated to inform the user that sound will not be recorded until the user deletes the existing sound, as shown in FIG. **8**C. In addition, if the user doesn't recall the contents of the previous sound annotation, the user may listen to it before deleting it by pressing "Play", or the user may cancel the record operation altogether by pressing "Exit". Thus, according to the present invention the user is enabled to perform complex tasks in the camera without fumbling through a set of hierarchical menus.

Another use of displaying interactive instructions in the dynamic overlay bars **430** and **432** in accordance with the present invention is to direct the user through image capture sequences. The purpose of directed image capture sequences is to customize the camera's image capture process for a specific application. More specifically, a directed image capture is a camera feature that provides the user with interactive instructions and feedback during capture mode to guide the user through a series of task-oriented image captures.

Upon initiation of a directed image capture sequence, interactive instructions are displayed the dynamic overlay bars **430** and **432** that prompt the user to perform specific operations (capture image or capture sound), and for prompting the user to enter specific input (name and date). Customized directed image captures can be tailored to specific professions, such as insurance claims adjusters and real estate agents, who would benefit from the use of a digital camera to capture groups of related pictures.

Referring now to FIGS. **9**A and **9**B, diagrams illustrating example directed image capture screens are shown. The example shown in FIG. **9**A may pertain to an insurance-related directed image capture that prompts an insurance claims adjuster to take a series of pictures of a damaged vehicle, or it may pertain to a real estate application that guides a user through taking photos of a house for sale.

In the insurance example, once the directed image capture has started, the user may be instructed to take various views of the damaged car. The user may also be shown the number of the current image in that sequence, and the total number of images to be captured.

After the views of the car are taken, the directed image capture may then prompt the user to enter specific information, such as the name of the image, as shown in FIG. **9**B. The user may then enter text by choosing letters using the four-way control button **409**. For insurance purposes, the directed image capture may also request the user to input the owner's name, license plate number, claim number, and so on. The sequence of images and corresponding information may then be downloaded from the camera or to a host computer for automated database storage or web page generation.

In one embodiment of the present invention, one or more directed image capture sequences may be provided in the camera as built-in functions, especially if the camera is tailored for specific industries.

However, in a second aspect of the present invention, the camera is made more flexible by implementing the directed image capture sequences as a set of program instructions that are externally loaded into the camera. Once loaded in the camera **110**, the instructions are then preferably executed by the GUI-based system software running on CPU **344**.

FIG. **10** is a block diagram illustrating the contents of ROM **350** where the software is stored, and DRAM **346** where the software is executed. The software **600** may include a control application **602**, a toolbox **604**, drivers **612**, a kernel **614**, and a startup/configuration module **616**. The control application **602** is the main program that controls high-level functions of the digital camera and is responsible for interfacing with functions in the toolbox **604**.

Toolbox **604** comprises selected function modules that control how the digital camera captures and manipulates images. The modules may include image processors **606**, a camera control shell **608**, and a script interpreter **610**. Image processors **606** are programs for enhancing (e.g., adjusting the contrast, sharpening, converting the image to gray-scale, etc.) the digital image received from imaging device **114**. Camera control shell **608** receives and processes data structures for controlling camera functions. Script interpreter **610** translates and executes script statements, which are used to provide the directed image capture sequences and other camera **110** features, as explained below.

Drivers **612** comprise program instructions for controlling various camera **110** hardware components, such as motor **234** (FIG. **2**) and a flash (not shown). Kernel **614** comprises program instructions providing basic underlying camera operating system services including synchronization routines, task creation, activation and deactivation routines, resource management routines, etc. Startup/configuration **616** comprises program instructions for providing initial camera **110** start-up routines such as the system boot routine and system diagnostics

When the camera **110** is first turned on and booted up, the startup/configuration **616** module begins to execute and loads the drivers **612**, the kernel **614**, the control application **602**, and system files containing configuration information into DRAM **346**. Thereafter, operation of the camera is passed to the control application **602**. In an alternative embodiment, the software **600** may executed out of ROM **350** in order to reduce the size of DRAM **346**.

The directed image capture sequence **618** may be loaded into the digital camera **110** from the removable memory **354** (FIG. **3**), a host computer, or a network, and stored in DRAM **346** to run in place of the control application **602**. In a preferred embodiment, the directed image capture sequence **618** is implemented using a script, which is a program written with text-based commands that may be easily written by the user. As used herein, a script may be written in any intrepreted language, such as Basic and Lisp, for example.

Once loaded into the camera, the script may be selected by the user from a menu where it is displayed for selection, and is thereafter executed by the control application **602** by passing the script to the script interpreter **610**. The script interpreter **610** then translates and executes the script instructions comprising the directed image capture sequence **618** one-by-one.

In an alternative embodiment, a directed image capture sequence **618** may be implemented as a traditional application program, rather than a script. However, an application program is typically written by a software developer in a traditional computer language, such as C++, compiled, and stored in machine language, which is a more complicated process than adding new functions to the camera via a text-based interpreted script.

FIG. **11** is a flow chart illustrating an exemplary process of installing and running a script-based directed image capture in a preferred embodiment of the present invention.

The process begins by inserting the removable memory **354** in step **700**. When the removable memory **354** is installed, the removable memory **354** is mounted by the operating system **600** in step **702**. Thereafter, the operating system searches for system files on the removable memory **354**, which alert the digital camera **110** to the presence of an external program, in step **704**.

Any system files found on the removable memory **354** and corresponding directed image capture sequences **618** are then installed and made available to the user for selection via menu choices that appear on the LCD screen **402** in step **706**. In a preferred embodiment, steps **704** and **706** are implemented as a hot-mount process when the removable memory **354** is inserted into the camera **110**, as described in U.S. patent application Ser. No. 09/032385 entitled "Method And System For Dynamically Updating Software Functions In A Digital Capture Device (P149)," filed on Feb. 26, 1998, which is assigned to assignee of the present application and herein incorporated by reference.

Once the list of available directed image capture sequences **618** are displayed, the user selects one of the directed image capture sequences **618** to run in step **708**. In a preferred embodiment, the list showing the available directed image capture sequences may be categorized in menus for easier selection. For example, assume a real estate agent has three different scripts for capturing images of different types of properties. The agent may name or create categories for the directed image capture sequences called "commercial", "industrial", and "residential", for instance. Selecting the residential category, for example, will cause a list of directed image captures to be displayed that are designed to capture pictures of different types of residential properties, such as one, two, and three bedroom homes. The user may then select a desired script depending on the particular house to be shot.

In one preferred embodiment, the directed image capture selections displayed in the menus may be erased from the camera by rebooting the camera, or by removing the removable memory **354** from the camera **110**.

After the user selects one of the directed image capture sequences **618** to run, the script interpreter **610** begins interpreting the directed image capture sequence **618** in step **710**, and control is passed from the control application **602** to the script. In step **712**, the script interpreter **610** fetches the first command comprising the directed image capture sequence **618**.

It is then determined whether the fetched command is a script "WaitForShutter" command in step **714**. This command causes control of the camera **110** to pass back to the control application **602** until the user presses the shutter button **418** to capture an image. The "WaitForShutter" command is preferably called with a quoted string parameter that is used in the dynamic overly bar **430** as the prompt to the user requesting an image capture (e.g., "Take photo of kitchen").

If the command is a "WaitForShutter" command in step **714**, then control is returned to the script after the user presses the shutter button **418** in step **716** to capture an image. If the fetched command is not a "WaitForShutter" command in step **714**, then the script interpreter **610** interprets and executes the command in step **718**.

After the user presses the shutter button **418** or after a script command has been executed, it is determined if the end of the script has been reached in step **720**. If not, then the next command is fetched in step **712**, and the process continues until the end of the script is reached, at which point control is returned to the control application **602** in step **722**.

Besides the "WaitForShutter" command, scripts may include two other categories of script commands. One category of commands pertain to camera settings, controls and other camera parameters specific to the subject and/or scene being captured. (ie: White Balance Modes, Exposure Modes, and Focus Modes). This category of commands enable users to input "Hints" optimizing the camera's photo systems for specific photographic conditions.

The other category of commands may pertain to file system operations and image tagging functions specific to the way in which image data is stored in memory. (ie: Guided Capture, Prompted Text/Audio Annotation, and Automated Image Grouping/Cataloging/Indexing.) This category of commands is particularly useful when used in conjunction with desktop computer applications where the hosting application is coordinated to take advantage of the preformatted media organization and tag information. For example, while a directed image capture sequence guides the user though a series of steps to create an image grouping, the script commands comprising the sequence generate appropriate tags and data structures to group the images and text captured during the sequence.

No matter whether the dynamic overlay bars of the present invention are used to display status information, soft key labels, or interactive instructions, as described herein, one important component affecting the user's experience is the method used to display the overlay bars on the image.

One approach would be the follow prior art techniques for displaying text (e.g. image name) over an image. This approach typically includes the following steps: 1) fetching the image to be displayed, which is typically stored in JPEG format, 2) decompressing and resizing the image, 3) displaying the decompressed image block-by-block, and then after the image is fully displayed, 4) writing the text on top of the image.

The problem with this method is that is visually unappealing to the user, and it reduces the performance of camera when the user turns-off the text display while viewing the image. The reason the method reduces camera performance is the following. When text or graphics are displayed over the image, they obscure a portion of the image. And when the text is turned-off, the obscured portions of the image must be displayed so that the original image is seen without the text. In order to do this, however, the entire JPEG image must be fetched and decompressed again so that the obscured portions of the image can be displayed on the LCD, which can be a time consuming operation.

A third aspect of the present invention overcomes these disadvantages by providing an improved method and system for displaying the overlay bars that not only enhances the visual effect associated with the overlay bars, but also eliminates the need to re-decompress the JPEG image data when the user turns-off the overlay bars, thereby increasing performance of the camera.

According to this aspect of the present invention, the overlay bars are displayed first, followed by the image, wherein the image is made to appear as though it is sliding underneath the overlay bars as it is being displayed. The image appears as though is it is sliding underneath the overlay bars because the image is displayed on the LCD screen **402** line-by-line or block-by-block (as used herein, a block may include anywhere from one line to sixteen lines of image data). As the display of the image progresses from the top of the screen **402**, the image therefore appears to be displayed behind the overlay bars **430** and **432** which are already present on the LCD screen **402**.

The overlay bars **430** and **432** are also provided with a translucent background so that so that the overlay bars **430** and **432** themselves do not obscure the image, but the text is easily distinguishable from the colors of the displayed image. The result is that after the image has been displayed, the overlay bars appear as a separate layer over the image. Further, the portions of the original image that intersect with the overlay bars **430** and **432** are saved, so that when the user turns-off the overlay bars **430** and **432**, only these portions of the image are redisplayed to restore the image. Thus this aspect of the present invention eliminates the need to re-decompress and display the entire image again, thereby increasing system performance.

Where typically, specialized hardware would be required to achieve the above-described effects, the present invention accomplishes the task through software and the manipulation of several memory buffers, as shown in FIG. **12**A.

FIG. **12**A is a diagram illustrating a buffer organization for displaying overlay bars, which in a preferred embodiment, resides in DRAM **346**. The buffer organization includes an overlay bar buffer **540**, a backstore buffer **542**, and a display buffer **544**. According to the present invention, the overlay bar buffer **540** is used to store the graphics data (graphics and text) that will be displayed in the overlay bars **430** and **432**. In a preferred embodiment the overlay bar buffer **540** is divided into a top and bottom portion, which store twenty lines of data each that correspond to the top and bottom overlay bar **430** and **432**, respectively.

The backstore buffer **542** is used to store original image data corresponding to the area of the LCD screen **402** where the overlay bars **430** and **432** will be displayed. The backstore buffer **542** is also divided into a top and bottom portion that are the same size as the top and bottom portions of the overlay bar buffer **540**.

As is typical in most rendering systems, the display buffer **544** is used to store the actual data that is to be displayed on the LCD. The data in the display buffer is accessed by LCD controller **390** (FIG. **3**) and displayed on the LCD.

FIG. **12**B is a flow chart illustrating the process of displaying overlay bars on the LCD in accordance with the present invention. The first step in the process is to preferably receive an input line of decompressed image data from an image processing system in step **800**. The process may also be modified to receive an input block of decompressed image data. In a preferred embodiment, the image processing system for providing the input data may include an image decompressor for decompressing the image data, and a resizer for resizing the lines of image data to fit the size of LCD screen **402**.

Next, it is determined whether the overlay bars **430** and **432** are turned-on or off in step **802**. If the overlay bars are turned-off, then the line of image data is copied directly to the display buffer **544** in step **804** for display on the LCD screen **402** and the process continues. If the overlay bars remain off for the duration of the time it takes to display the image line-by-line or block-by-block, then the entire image is displayed on the LCD screen **402** using only the display buffer **544**.

If the overlay bars are turned-on in step **802**, then it is determined whether the line of data will be displayed within the area of the LCD screen **402** that is occupied by an overlay bar in step **806**. If the line is within an overlay bar, the line is copied into the backstore buffer **542** in step **808**. The purpose of copying the line to the backstore buffer **542** is to save the portion of the image that will be displayed underneath the overlay bars **430** and **432**.

After the current line of image data is copied into the backstore buffer **542**, the corresponding line stored in the overlay bar buffer **540** is merged with the current line in the backstore buffer **542** in step **810**. The purpose of merging the two lines is to display the background of the overlay bars **430** and **432** translucently over the image on the LCD screen **402**. This is done by halving the luminance value of each pixel of the image data from the backstore buffer **542** that falls within the bounds of an overlay bar **430** or **432**, and overwriting each pixel in the line of image data that falls under a pixel of text or graphic data from the overlay bar buffer **540**. Halving the luminance value of the image data causes the colors of the image that overlap an overlay bar **430** or **432** to be half as bright, thus giving the overlay bar **430** or **432** a translucent appearance and allowing the user to see the image through the overlay bar **430** or **432**, as shown in FIG. **7**B. In an alternative embodiment, the translucency of the overlay bars **430** and **432** is provided by increasing, rather than decreasing, the luminance value of each image pixel falling within the area of an overlay bar. In this case, the text displayed in the overlay bars **430** and **432** is displayed using a dark color.

As the line from the overlay bar buffer **540** is merged with the line from the backstore buffer **542**, the resulting merged line is written into the display buffer **544** for display in step **812**. If the current line is the last line of image data in step **814**, then the process ends. Otherwise the next line of image data is received in step **800** and the process continues. In an alternate embodiment of the present invention, the determination of whether the overlay bars **802** are on/off in step **802** may be performed after copying the input line to the backstore buffer **542** in step **8**. In this embodiment, the input line is copied into the backstore buffer **542** even when the overlay bars **430** and **432** are off.

In a preferred embodiment of present invention, the software **600** controlling the digital camera **110** is implemented as event driven software, which responds to input from the user (select menu, press button, etc.) or other applications at unregulated times. When, for example, the user first switches to play mode and/or selects a new image to display, the first steps that are performed in the process are to blank the LCD screen **402**, fill the overlay bar buffer **540** with relevant mode-specific information, and then contents of the overlay bar buffer **540** and the backstore buffer **542** are merged and written to the display buffer **544**. In this case, the backstore buffer **542** may contain black or white pixel values to provide the blank screen. Thereafter, the process proceed as described in FIG. **13**.

If the user turns-off the overlay bars **430** and **432** while an image is displayed, then the process is interrupted and software **600** copies the entire contents of the backstore buffer **542**, which contains the original image data, to the display buffer **544** for display. This causes the overlay bars to disappear from the LCD screen **402** and restores the original image without having to re-decompress and display the entire image over again.

If the user then turns-on the overlay bars **430** and **432**, the software **600** merges the contents of the overlay bar buffer **540** and the backstore buffer **542** to provide the translucent bars and text over the image, and then copies the result to the display buffer **544** for display. This may be done by executing step **812** and **814** for each line of the data in the buffers **540** and **542**.

Also, when the overlay bars **430** and **432** are on, if the overlay bars **430** and **432** are updated by the control application **602** due to a change in status or instructions, the

contents of the overlay bar buffer **540** and the backstore buffer **542** are remerged and written into the display buffer **544** for display.

A method and system for displaying overlay bars in a digital imaging device has been disclosed. The overlay bars enable a user to apply camera functions and features to images with minimum effort, while allowing for easy viewing of the image. In addition, the overlay bars are used to display interactive instructions to the user in the form of directed image capture to guide the user through complex task, without the need for help screens or for the user to remember complicated key sequences. Finally, the method and system used to display overlay bars eliminates the need to re-decompress and display the image when the user turns-off the overlay bars, which increases the responsiveness of the camera.

Although the present invention has been described in accordance with the embodiments shown, one of ordinary skill in the art will readily recognize that there could be variations to the embodiments and those variations would be within the spirit and scope of the present invention. For example, the functions assigned to the soft keys, the number of soft keys, and the placement of the soft keys and labels in and around the display may vary. The method and system may also be implemented in digital imaging devices having only two modes, but that have multiple navigation screens within the "play mode" Accordingly, many modifications may be made by one of ordinary skill in the art without departing from the spirit and scope of the appended claims.

What is claimed is:

1. A method for displaying an overlay bar on a digital imaging device comprising the steps of:

a) displaying the overlay bar in a predetermined area of a display screen for displaying text information, the overlay bar comprising a plurality of pixels corresponding to the text information;

b) providing an image to display on the display screen, the image comprising a plurality of pixels having luminance values; and

c) displaying the image by

i) modifying the luminance value of each pixel of the image data that falls within the area of the overlay bar, and

ii) overwriting each pixel of image data that falls under a pixel of text in the overlay bar,

wherein modifying the luminance values of the image data provides the overlay bar with a translucent appearance thereby enabling a user to see the image through the overlay bar.

2. A method as in claim **1** wherein step ci) further includes the steps of saving each pixel of the image data that falls within the area of the overlay bar, creating saved image data; and

in response to the user turning-off the overlay bar, displaying the saved image data on the display screen, thereby eliminating the need to re-display the entire image.

3. A method as in claim **2** wherein step a) further includes the step of providing the overlay bar with graphic information.

4. A method as in claim **3** wherein step ci) for modifying the luminance values includes the step of decreasing the luminance values.

5. A method as in claim **3** wherein step ci) for modifying the luminance values includes the step of increasing the luminance values.

6. A method as in claim **3** wherein step c) further includes the step of displaying the image line-by-line.

7. A method as in claim **3** wherein step c) further includes the step of displaying the image block-by-block.

* * * * *

JS 44 (Rev. 12/07)

CIVIL COVER SHEET

The JS 44 civil cover sheet and the information contained herein neither replace nor supplement the filing and service of pleadings or other papers as required by law, except as provided by local rules of court. This form, approved by the Judicial Conference of the United States in September 1974, is required for the use of the Clerk of Court for the purpose of initiating the civil docket sheet. (SEE INSTRUCTIONS ON THE REVERSE OF THE FORM.)

I. (a) PLAINTIFFS

FlashPoint Technology, Inc.

(b) County of Residence of First Listed Plaintiff Hillsborough, NH
(EXCEPT IN U.S. PLAINTIFF CASES)

(c) Attorney's (Firm Name, Address, and Telephone Number)

Bouchard Margules & Friedlander, 222 Delaware Ave., Ste. 1400, Wilmington, DE 19801; (302) 573-3500

DEFENDANTS

AT&T Mobility, LLC, d/b/a Cingular Wireless, HTC America, Inc., HTC Corp., Kyocera Wireless Corp., Kyocera Corp., LG Electronics USA, Inc., LG Electronics, Inc., Motorola, Inc., Nokia, Inc., Nokia Corp., Palm, Inc., Research In (* cont.)

County of Residence of First Listed Defendant Fulton, GA
(IN U.S. PLAINTIFF CASES ONLY)

NOTE: IN LAND CONDEMNATION CASES, USE THE LOCATION OF THE LAND INVOLVED.

(* cont.) Motion Corp., Research In Motion Ltd., Sprint ~~Attorneys (If Known)~~ Spectrum L.P., d/b/a Sprint PCS, T-Mobile USA, Inc., Cellco Partnership, d/b/a Verizon Wireless.

II. BASIS OF JURISDICTION (Place an "X" in One Box Only)

- ❒ 1 U.S. Government Plaintiff
- ☒ 3 Federal Question (U.S. Government Not a Party)
- ❒ 2 U.S. Government Defendant
- ❒ 4 Diversity (Indicate Citizenship of Parties in Item III)

III. CITIZENSHIP OF PRINCIPAL PARTIES (Place an "X" in One Box for Plaintiff and One Box for Defendant)

(For Diversity Cases Only)

	PTF	DEF		PTF	DEF
Citizen of This State	❒ 1	❒ 1	Incorporated *or* Principal Place of Business In This State	❒ 4	❒ 4
Citizen of Another State	❒ 2	❒ 2	Incorporated *and* Principal Place of Business In Another State	❒ 5	❒ 5
Citizen or Subject of a Foreign Country	❒ 3	❒ 3	Foreign Nation	❒ 6	❒ 6

IV. NATURE OF SUIT (Place an "X" in One Box Only)

CONTRACT
- ❒ 110 Insurance
- ❒ 120 Marine
- ❒ 130 Miller Act
- ❒ 140 Negotiable Instrument
- ❒ 150 Recovery of Overpayment & Enforcement of Judgment
- ❒ 151 Medicare Act
- ❒ 152 Recovery of Defaulted Student Loans (Excl. Veterans)
- ❒ 153 Recovery of Overpayment of Veteran's Benefits
- ❒ 160 Stockholders' Suits
- ❒ 190 Other Contract
- ❒ 195 Contract Product Liability
- ❒ 196 Franchise

REAL PROPERTY
- ❒ 210 Land Condemnation
- ❒ 220 Foreclosure
- ❒ 230 Rent Lease & Ejectment
- ❒ 240 Torts to Land
- ❒ 245 Tort Product Liability
- ❒ 290 All Other Real Property

TORTS

PERSONAL INJURY
- ❒ 310 Airplane
- ❒ 315 Airplane Product Liability
- ❒ 320 Assault, Libel & Slander
- ❒ 330 Federal Employers' Liability
- ❒ 340 Marine
- ❒ 345 Marine Product Liability
- ❒ 350 Motor Vehicle
- ❒ 355 Motor Vehicle Product Liability
- ❒ 360 Other Personal Injury

PERSONAL INJURY
- ❒ 362 Personal Injury - Med. Malpractice
- ❒ 365 Personal Injury - Product Liability
- ❒ 368 Asbestos Personal Injury Product Liability

PERSONAL PROPERTY
- ❒ 370 Other Fraud
- ❒ 371 Truth in Lending
- ❒ 380 Other Personal Property Damage
- ❒ 385 Property Damage Product Liability

CIVIL RIGHTS
- ❒ 441 Voting
- ❒ 442 Employment
- ❒ 443 Housing/ Accommodations
- ❒ 444 Welfare
- ❒ 445 Amer. w/Disabilities - Employment
- ❒ 446 Amer. w/Disabilities - Other
- ❒ 440 Other Civil Rights

PRISONER PETITIONS
- ❒ 510 Motions to Vacate Sentence

Habeas Corpus:
- ❒ 530 General
- ❒ 535 Death Penalty
- ❒ 540 Mandamus & Other
- ❒ 550 Civil Rights
- ❒ 555 Prison Condition

FORFEITURE/PENALTY
- ❒ 610 Agriculture
- ❒ 620 Other Food & Drug
- ❒ 625 Drug Related Seizure of Property 21 USC 881
- ❒ 630 Liquor Laws
- ❒ 640 R.R. & Truck
- ❒ 650 Airline Regs.
- ❒ 660 Occupational Safety/Health
- ❒ 690 Other

LABOR
- ❒ 710 Fair Labor Standards Act
- ❒ 720 Labor/Mgmt. Relations
- ❒ 730 Labor/Mgmt.Reporting & Disclosure Act
- ❒ 740 Railway Labor Act
- ❒ 790 Other Labor Litigation
- ❒ 791 Empl. Ret. Inc. Security Act

IMMIGRATION
- ❒ 462 Naturalization Application
- ❒ 463 Habeas Corpus - Alien Detainee
- ❒ 465 Other Immigration Actions

BANKRUPTCY
- ❒ 422 Appeal 28 USC 158
- ❒ 423 Withdrawal 28 USC 157

PROPERTY RIGHTS
- ❒ 820 Copyrights
- ☒ 830 Patent
- ❒ 840 Trademark

SOCIAL SECURITY
- ❒ 861 HIA (1395ff)
- ❒ 862 Black Lung (923)
- ❒ 863 DIWC/DIWW (405(g))
- ❒ 864 SSID Title XVI
- ❒ 865 RSI (405(g))

FEDERAL TAX SUITS
- ❒ 870 Taxes (U.S. Plaintiff or Defendant)
- ❒ 871 IRS—Third Party 26 USC 7609

OTHER STATUTES
- ❒ 400 State Reapportionment
- ❒ 410 Antitrust
- ❒ 430 Banks and Banking
- ❒ 450 Commerce
- ❒ 460 Deportation
- ❒ 470 Racketeer Influenced and Corrupt Organizations
- ❒ 480 Consumer Credit
- ❒ 490 Cable/Sat TV
- ❒ 810 Selective Service
- ❒ 850 Securities/Commodities/ Exchange
- ❒ 875 Customer Challenge 12 USC 3410
- ❒ 890 Other Statutory Actions
- ❒ 891 Agricultural Acts
- ❒ 892 Economic Stabilization Act
- ❒ 893 Environmental Matters
- ❒ 894 Energy Allocation Act
- ❒ 895 Freedom of Information Act
- ❒ 900Appeal of Fee Determination Under Equal Access to Justice
- ❒ 950 Constitutionality of State Statutes

V. ORIGIN (Place an "X" in One Box Only)

☒ 1 Original Proceeding ❒ 2 Removed from State Court ❒ 3 Remanded from Appellate Court ❒ 4 Reinstated or Reopened ❒ 5 Transferred from another district (specify) ❒ 6 Multidistrict Litigation ❒ 7 Appeal to District Judge from Magistrate Judgment

VI. CAUSE OF ACTION

Cite the U.S. Civil Statute under which you are filing (**Do not cite jurisdictional statutes unless diversity**):
Title 35, United States Code Sections 271, et seq.

Brief description of cause:
Patent Infringement

VII. REQUESTED IN COMPLAINT:

❒ CHECK IF THIS IS A **CLASS ACTION** UNDER F.R.C.P. 23

DEMAND $

CHECK YES only if demanded in complaint:
JURY DEMAND: ☑ Yes ❒ No

VIII. RELATED CASE(S) IF ANY

(See instructions): JUDGE Sleet DOCKET NUMBER 01-cv-00711-GMS; 01-cv-00707-GMS; 01-cv-00708-GMS; 01-cv-00709-GMS; 01-cv-00710-GMS; 02-cv-00553-GMS; 02-cv-00554-GMS; 02-cv-00555-GMS; 02-cv-01522-GMS; and 05-cv-00802-GMS

DATE 03/07/2008

SIGNATURE OF ATTORNEY OF RECORD /s/ David Margules

FOR OFFICE USE ONLY

RECEIPT # _____ AMOUNT _____ APPLYING IFP _____ JUDGE _____ MAG. JUDGE _____

AO FORM 85 RECEIPT (REV. 9/04)

United States District Court for the District of Delaware

Civil Action No. 08-140

ACKNOWLEDGMENT OF RECEIPT FOR AO FORM 85

NOTICE OF AVAILABILITY OF A UNITED STATES MAGISTRATE JUDGE TO EXERCISE JURISDICTION

I HEREBY ACKNOWLEDGE RECEIPT OF 17 COPIES OF AO FORM 85.

3/7/08
(Date forms issued)

(Signature of Party or their Representative)

ROBERT MCFADDEN
(Printed name of Party or their Representative)

Note: Completed receipt will be filed in the Civil Action