IN THE UNITED STATES DISTRICT COURT
FOR THE DISTRICT OF DELAWARE

POWER INTEGRATIONS, INC., Plaintiff, v. BCD SEMICONDUCTOR CORP, et al., Defendants.	C.A. No. 07-633 JJF-LPS **REDACTED**

PLAINTIFF POWER INTEGRATIONS, INC.'S
UNOPPOSED MOTION TO AMEND ITS FIRST AMENDED COMPLAINT

FISH & RICHARDSON P.C.

William J. Marsden, Jr. (#2247)
Kyle Wagner Compton (#4693)
919 N. Market Street, Suite 1100
P.O. Box 1114
Wilmington, DE 19801
Telephone: (302) 652-5070
marsden@fr.com
kcompton@fr.com

Frank E. Scherkenbach
FISH & RICHARDSON P.C.
225 Franklin Street
Boston, MA 02110-2804
Telephone: (617) 542-5070

Howard G. Pollack
Michael R. Headley
Scott A. Penner
FISH & RICHARDSON P.C.
500 Arguello Street, Suite 500
Redwood City, CA 94063
Telephone: (650) 839-5070

ATTORNEYS FOR PLAINTIFF
POWER INTEGRATIONS, INC.

Dated: April 28, 2008

TABLE OF CONTENTS

PAGE

INTRODUCTION 1

I. NATURE AND STAGE OF PROCEEDING 1

II. SUMMARY OF ARGUMENT 1

III. STATEMENT OF FACTS 2

IV. ARGUMENT 3

V. CONCLUSION 3

TABLE OF AUTHORITIES

CASES **PAGE**

Arthur v. Maersk, Inc.,
434 F.3d 196, 202 (3d Cir. 2006).....3

STATUTES

Fed. R. Civ. P. 15(a)(1)(A).....1

Fed. R. Civ. P. 15(a)(2).....1

D. Del. LR 15.....1

INTRODUCTION

Plaintiff Power Integrations, Inc. ("Power Integrations") seeks leave to amend its First Amended Complaint against BCD Semiconductor Corp. and Shanghai SIM-BCD Semiconductor Manufacturing Co., Ltd. (collectively, "BCD") to add claims for willful infringement.[1] Counsel for Power Integrations have conferred with counsel for BCD, and have been informed that BCD does not oppose this Motion. This Motion is being filed on or before the deadline of April 28, 2008 set by Paragraph 3 of the Rule 16 Scheduling Order for motions to amend the pleadings.

I. NATURE AND STAGE OF PROCEEDING

Power Integrations filed its original complaint in this Court on October 15, 2007. (D.I. 1.) BCD moved to dismiss that complaint on January 21, 2008 (D.I. 10), and Power Integrations moved for preliminary injunctive relief on January 25, 2008 (D.I. 12.) Both motions remain pending. Power Integrations filed its First Amended Complaint for Patent Infringement as a matter of course pursuant to Fed. R. Civ. P. 15(a)(1)(A) on March 13, 2008. (D.I. 50.) Paragraph 3 of the Rule 16 Scheduling Order entered in this case sets April 28, 2008 as the date on or before which the parties must move to amend pleadings. (D.I. 44.) Power Integrations now moves the Court pursuant to Fed. R. Civ. P. 15(a)(2) and D. Del. LR 15.1 for leave to amend its First Amended Complaint for Patent Infringement to add claims for willful infringement.

II. SUMMARY OF ARGUMENT

Leave of Court to amend pleadings is typically granted where justice so requires. Power Integrations seeks to amend its First Amended Complaint for Patent Infringement to include claims for willful infringement that could not, in good faith, have been asserted earlier. Power

---

[1] Clean and blacklined versions of the Second Amended Complaint for Patent Infringement are attached as Exhibits 1 and 2 hereto.

REDACTED

Integrations only recently learned of factual matters underlying those claims through discovery. Power Integrations has filed this Motion, which BCD does not oppose, within the period prescribed in the scheduling order, and justice requires that Power Integrations be permitted to assert claims for which it has a legal basis.

III. STATEMENT OF FACTS

Power Integrations sued BCD for patent infringement, accusing a number of BCD devices of infringing Power Integrations' patents. On March 13, 2008, Power Integrations amended its complaint to remove its claim for infringement of one of the originally asserted patents.

Pursuant to the Court's scheduling order, written and document discovery in this case is now under way. Through discovery, Power Integrations' counsel learned the following facts supporting a good faith claim that BCD's infringement of the asserted patents was willful:

1.

2. Fairchild Semiconductor, which Power Integrations previously sued for infringement of the same patents asserted against BCD in this action, was found to infringe following a public trial on the merits;

3. BCD made the objectively baseless decision

and

4. BCD had counsel attend the trial where the Jury rejected Fairchild's validity defenses for the two patents at issue in this case, yet it continued to sell its infringing products thereafter.

Prior to discovery, Power Integrations could not, in good-faith, have asserted claims for willful infringement when it filed its initial complaint or when it first amended its complaint. The facts enumerated above provide Power Integrations with a good-faith basis for asserting that BCD's infringement was willful at this time.[2]

IV. ARGUMENT

Federal Rule of Civil Procedure 15 "embodies a liberal approach to pleading," and "leave of court [to amend]. . . 'shall be freely given when justice so requires.'" *Arthur v. Maersk, Inc.*, 434 F.3d 196, 202 (3d Cir. 2006) (quoting FED. R. CIV. P. 15(a)). The Court should allow Power Integrations to amend its complaint to assert claims for willful patent infringement because (1) Power Integrations only recently discovered evidence sufficient to support a factual basis for those claims under prevailing legal authority, (2) Power Integrations has moved to amend within the period prescribed in the scheduling order, (3) justice so requires, and (4) BCD does not oppose this motion.

V. CONCLUSION

For the reasons set forth above, Power Integrations respectfully requests that the Court permit Power Integrations to amend its complaint to add claims for willful infringement of the patents-in-suit.

---

[2] While BCD has indicated it does not oppose this motion for leave to amend, counsel for BCD has indicated its position that it believes Power Integrations' willfulness claim will ultimately be determined to be without merit.

Dated: April 28, 2008

FISH & RICHARDSON P.C.

By: *Kyle Wagner Compton*

William J. Marsden, Jr. (#2247)
Kyle Wagner Compton (#4693)
919 N. Market Street, Suite 1100
P.O. Box 1114
Wilmington, DE 19801
Telephone: (302) 652-5070
Email: marsden@fr.com
Email: kcompton@fr.com

Frank E. Scherkenbach
FISH & RICHARDSON P.C.
225 Franklin Street
Boston, MA 02110-2804
Telephone: (617) 542-5070

Howard G. Pollack
Michael R. Headley
Scott A. Penner
FISH & RICHARDSON P.C.
500 Arguello Street, Suite 500
Redwood City, CA 94063
Telephone: (650) 839-5070

ATTORNEYS FOR PLAINTIFF
POWER INTEGRATIONS, INC.

80058962.doc

CERTIFICATION PURSUANT TO LOCAL RULE OF CIVIL PROCEDURE 7.1.1

Pursuant to Local Rules of Civil Procedure 7.1.1, counsel for Power Integrations certifies that it has in good faith conferred with counsel for BCD, and counsel for BCD does not oppose Power Integrations' Motion to Amend its First Amended Complaint.

CERTIFICATE OF SERVICE

I hereby certify that on April 28, 2008, I hereby served PLAINTIFF POWER INTEGRATIONS, INC.'S UNOPPOSED MOTION TO AMEND ITS FIRST AMENDED COMPLAINT on the following counsel of record at the address and in the manner indicated below.

BY HAND
John G. Day, Esq.
Steven J. Balick, Esq.
Tiffany Geyer Lydon
Ashby & Geddes
500 Delaware Avenue, 8th Floor
Wilmington, DE 19899

BY EMAIL AND FEDERAL EXPRESS
Erik R. Puknys, Esq.
Finnegan, Henderson, Farabow, Garrett & Dunner LLP
Stanford Research Park
3300 Hillview Avenue
Palo Alto, CA 94304-1203

BY EMAIL AND FEDERAL EXPRESS
Robert L. Burns, Esq.
Finnegan, Henderson, Farabow, Garrett & Dunner LLP
Two Freedom Square
11955 Freedom Drive
Reston, VA 20190-5675

BY EMAIL AND FEDERAL EXPRESS
E. Robert Yoches, Esq.
Finnegan, Henderson, Farabow, Garrett & Dunner LLP
901 New York Avenue, NW
Washington, DC 20001-4413

/s/ Kyle Wagner Compton
Kyle Wagner Compton

80058962.doc

IN THE UNITED STATES DISTRICT COURT
FOR THE DISTRICT OF DELAWARE

POWER INTEGRATIONS, INC., a Delaware corporation, Plaintiff, v. BCD SEMICONDUCTOR CORPORATION, a California corporation, and SHANGHAI SIM-BCD SEMICONDUCTOR MANUFACTURING CO., LTD., a China corporation, Defendants.	C.A. No. 07-633 JJF-LPS **JURY TRIAL REQUESTED**

SECOND AMENDED COMPLAINT FOR PATENT INFRINGEMENT

Plaintiff Power Integrations, Inc. hereby alleges as follows:

THE PARTIES

1. Power Integrations, Inc. ("Power Integrations") is incorporated under the laws of the state of Delaware, and has a regular and established place of business at 5245 Hellyer Avenue, San Jose, California, 95138.

2. Upon information and belief, defendant BCD Semiconductor Corporation is incorporated under the laws of the state of California, and has a regular and established place of business at 30920 Huntswood Avenue, Suite D, Hayward, California, 94544.

3. Upon information and belief, defendant Shanghai SIM-BCD Semiconductor Manufacturing Co., Ltd. is incorporated under the laws of the People's Republic of China, with its headquarters located at 800 Yishan Road, Shanghai 200233, China.

4. Defendant BCD Semiconductor Corporation and defendant Shanghai SIM-BCD Semiconductor Manufacturing Co., Ltd. will hereinafter be collectively referred to as the "Defendants."

JURISDICTION AND VENUE

5. This action arises under the patent laws of the United States, Title 35 U.S.C. § 1 *et seq*. This Court has subject matter jurisdiction under 28 U.S.C. §§ 1331 and 1338(a).

6. Upon information and belief, this Court has personal jurisdiction over Defendants because Defendants have purposely availed themselves of the privilege of conducting activities within this State and District.

7. Upon information and belief, venue is proper in this Court pursuant to 28 U.S.C. §§ 1391(b), 1391(c), and 1400 because Defendants are subject to personal jurisdiction in this judicial District.

GENERAL ALLEGATIONS

8. Power Integrations' products include its TOPSwitch®, TinySwitch®, LinkSwitch®, and DPA-Switch® families of power conversion integrated circuit devices which are used in power supplies for electronic devices such as cellular telephones, LCD monitors, and computers. These products are sold throughout the United States, including Delaware.

9. Upon information and belief, Defendants manufacture pulse width modulation ("PWM") controller integrated circuits devices (e.g., devices intended for use in power conversion applications such as off-line power supplies or battery chargers for portable electronics), and directly and through their affiliates, import, sell, and offer to sell the same throughout the United States, including Delaware.

FIRST CAUSE OF ACTION

INFRINGEMENT OF U.S. PATENT NO. 6,107,851

10. The allegations of paragraphs 1-9 are incorporated as though fully set forth herein.

11. Power Integrations is now, and has been since its issuance, the assignee and sole owner of all right, title, and interest in United States Patent No. 6,107,851,

entitled "Offline Converter with Integrated Softstart and Frequency Jitter" ("the '851 patent"), which was duly and legally issued on August 22, 2000. A true and correct copy of the '851 patent is attached hereto as Exhibit A.

12. Upon information and belief, Defendants have been and are now infringing, inducing infringement, and contributing to the infringement of the '851 patent in this District and elsewhere by making, using, selling, offering to sell, and/or importing devices, including PWM integrated circuit devices, covered by one or more claims of the '851 patent, and/or contributing to or inducing the same by third-parties, all to the injury of Power Integrations.

13. Defendants' acts of infringement have injured and damaged Power Integrations.

14. Defendants' infringement has caused irreparable injury to Power Integrations and will continue to cause irreparable injury until Defendants are enjoined from further infringement by this Court.

15. Upon information and belief, Defendants' infringement has been, and continues to be, willful so as to warrant the enhancement of damages awarded as a result of their infringement.

SECOND CAUSE OF ACTION

INFRINGEMENT OF U.S. PATENT NO. 6,249,876

16. The allegations of paragraphs 1-9 are incorporated as though fully set forth herein.

17. Power Integrations is now, and has been since its issuance, the assignee and sole owner of all right, title, and interest in United States Patent No. 6,249,876, entitled "Frequency Jittering Control for Varying the Switching Frequency of a Power Supply" ("the '876 patent"), which was duly and legally issued on June 19, 2001. A true and correct copy of the '876 patent is attached hereto as Exhibit B.

18. Upon information and belief, Defendants have been and are now infringing, inducing infringement, and contributing to the infringement of the '876 patent in this District and elsewhere by making, using, selling, offering to sell, and/or importing devices, including PWM integrated circuit devices, covered by one or more claims of the '876 patent, and/or contributing to or inducing the same by third-parties, all to the injury of Power Integrations.

19. Defendants' acts of infringement have injured and damaged Power Integrations.

20. Defendants' infringement has caused irreparable injury to Power Integrations and will continue to cause irreparable injury until Defendants are enjoined from further infringement by this Court.

21. Upon information and belief, Defendants' infringement has been, and continues to be, willful so as to warrant the enhancement of damages awarded as a result of their infringement.

PRAYER FOR RELIEF

WHEREFORE, Plaintiff requests the following relief:

(a) judgment against Defendants as to infringement of the '851 patent;

(b) judgment against Defendants as to infringement of the '876 patent;

(c) a permanent injunction preventing Defendants and their officers, directors, agents, servants, employees, attorneys, licensees, successors, assigns, and customers, and those in active concert or participation with any of them, from making, using, importing, offering to sell or selling any devices that infringe any claim of the '851 or '876 patents;

(d) judgment against Defendants for money damages sustained as a result of Defendants' infringement of the '851 and '876 patents in an amount to be determined at trial;

(e) that any such money judgment be trebled as a result of the willful nature of Defendants' infringement;

(f) an accounting for infringing sales not presented at trial and an award by the court of additional damages for any such infringing sales;

(g) costs and reasonable attorneys' fees incurred in connection with this action pursuant to 35 U.S.C § 285; and

(h) such other and further relief as this Court finds just and proper.

JURY DEMAND

Plaintiff requests trial by jury.

Dated: April 28, 2008

FISH & RICHARDSON P.C.

By: */s/ William J. Marsden, Jr.*

William J. Marsden, Jr. (#2247)
Kyle Wagner Compton (#4693)
919 N. Market Street, Suite 1100
P.O. Box 1114
Wilmington, DE 19801
Telephone: (302) 652-5070
Facsimile: (302) 652-0607
marsden@fr.com

Frank E. Scherkenbach
225 Franklin Street
Boston, MA 02110-2804
Telephone: (617) 542-5070
Facsimile: (617) 542-8906

Howard G. Pollack
Michael R. Headley
500 Arguello Street, Suite 500
Redwood City, CA 94063
Telephone: (650) 839-5070
Facsimile: (650) 839-5071

Attorneys for Plaintiff
POWER INTEGRATIONS, INC.

Exhibit A

US006107851A

United States Patent [19]

Balakirshnan et al.

[11] **Patent Number: 6,107,851**

[45] **Date of Patent: Aug. 22, 2000**

[54] **OFFLINE CONVERTER WITH INTEGRATED SOFTSTART AND FREQUENCY JITTER**

[75] Inventors: **Balu Balakirshnan**; **Alex Djenguerian**, both of Saratoga; **Leif Lund**, San Jose, all of Calif.

[73] Assignee: **Power Integrations, Inc.**, Sunnyvale, Calif.

[21] Appl. No.: **09/080,774**

[22] Filed: **May 18, 1998**

[51] **Int. Cl.**[7] **H03K 3/017**

[52] **U.S. Cl.** **327/172**; 327/531; 327/544

[58] **Field of Search** 327/172, 173, 327/174, 175, 176, 530, 531, 544

[56] **References Cited**

U.S. PATENT DOCUMENTS

3,491,252	1/1970	Petrohilos	307/229
3,555,399	1/1971	Buchanan et al.	321/43
3,840,797	10/1974	Aggen et al.	321/2
3,916,224	10/1975	Daniels et al.	307/265
4,072,965	2/1978	Kondo	354/51
4,143,282	3/1979	Berard, Jr. et al.	307/43
4,228,493	10/1980	de Sartre et al.	363/56
4,236,198	11/1980	Ohsawa et al.	363/49
4,495,554	1/1985	Simi et al.	363/21
4,559,590	12/1985	Davidson	363/21
4,622,627	11/1986	Rodriguez et al.	363/37
4,695,936	9/1987	Whittle	363/21
4,706,176	11/1987	Kettschau	363/21
4,706,177	11/1987	Josephson	363/24
4,720,641	1/1988	Faini	307/18
4,725,769	2/1988	Cini et al.	323/283
4,734,839	3/1988	Barthold	363/16
4,739,462	4/1988	Farnsworth et al.	363/21
4,806,844	2/1989	Claydon et al.	323/311
4,809,148	2/1989	Barn	363/20
4,811,184	3/1989	Koninsky et al.	363/17
4,814,674	3/1989	Hrassky	318/254
4,858,094	8/1989	Barlage	363/21
4,862,339	8/1989	Inou et al.	363/21
4,866,590	9/1989	Odaka et al.	363/49
4,870,555	9/1989	White	363/21
4,887,199	12/1989	Whittle	363/49
4,888,497	12/1989	Dallabora et al.	307/272.3
4,890,210	12/1989	Myers	363/21
4,928,220	5/1990	White	363/56
4,937,728	6/1990	Leonardi	363/97

(List continued on next page.)

FOREIGN PATENT DOCUMENTS

WO 83/01157	3/1983	European Pat. Off.	H02M 3/335
0 651 440 A1	5/1995	European Pat. Off.	H01L 23/433
0 694 966 A1	1/1996	European Pat. Off.	H01L 23/495
0 736 957 A1	10/1996	European Pat. Off.	H02M 1/12
0 740 491 A1	10/1996	European Pat. Off.	H05B 41/00
0 748 034 A1	12/1996	European Pat. Off.	H02M 3/00
0 748 035 A1	12/1996	European Pat. Off.	H02M 3/155
0 751 621 A1	1/1997	European Pat. Off.	H03K 17/16

OTHER PUBLICATIONS

H.S. Hoffman, Jr., Self–Generated Bias Supply, IBM Technical Disclosure Bulletin, vol. 20, No. 5, Oct. 1997, pp. 1814–1815.

(List continued on next page.)

Primary Examiner—Jeffrey Zweizig

Attorney, Agent, or Firm—Blakely, Sokoloff, Taylor & Zafman, LLP

[57] **ABSTRACT**

A pulse width modulated switch comprises a first terminal, a second terminal, and a switch that allows a signal to be transmitted between the first terminal and the second terminal according to a drive signal provided at a control input. The pulse width modulated switch also comprises a frequency variation circuit that provides a frequency variation signal and an oscillator that provides an oscillation signal having a frequency of that varies within a frequency range according to the frequency variation signal. The oscillator further provides a maximum duty cycle signal comprising a first state and a second state. The pulse width modulated switch further comprises a drive circuit that provides the drive signal when the maximum duty cycle signal is in the first state and a magnitude of the oscillation signal is below a variable threshold level.

18 Claims, 9 Drawing Sheets

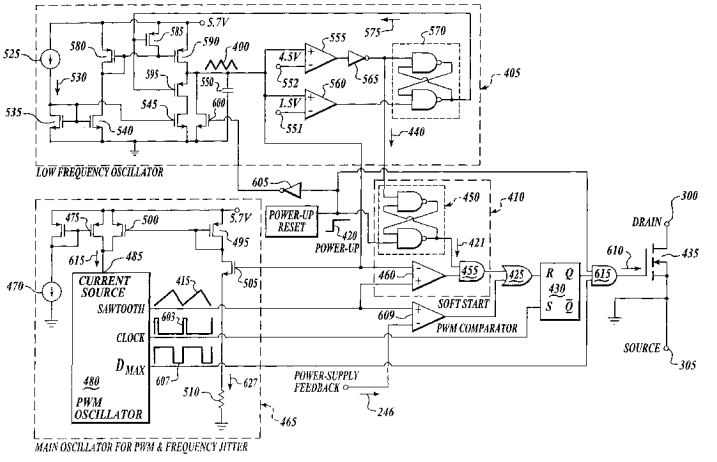

U.S. PATENT DOCUMENTS

4,943,903	7/1990	Cardwell, Jr.	363/97
5,012,401	4/1991	Barladge	363/97
5,014,178	5/1991	Balakrishnan	363/49
5,034,871	7/1991	Okamoto et al.	363/15
5,041,956	8/1991	Marinus	363/21
5,072,353	12/1991	Feldkeller	363/20
5,086,364	2/1992	Leipold et al.	361/18
5,146,394	9/1992	Ishii et al.	363/16
5,161,098	11/1992	Balakirshnan	363/144
5,177,408	1/1993	Marques	315/291
5,200,886	4/1993	Schwartz et al.	363/49
5,297,014	3/1994	Saito et al.	363/21
5,313,381	5/1994	Balakrishnan	363/147
5,394,017	2/1995	Catano et al.	307/66
5,452,195	9/1995	Lehr et al.	363/21
5,461,303	10/1995	Leman et al.	323/222
5,481,178	1/1996	Wilcox et al.	323/287
5,508,602	4/1996	Borgato et al.	323/222
5,528,131	6/1996	Marty et al.	323/901
5,552,746	9/1996	Danstrom	327/427
5,563,534	10/1996	Rossi et al.	327/77
5,568,084	10/1996	McClure et al.	327/538
5,570,057	10/1996	Palara	327/365
5,572,156	11/1996	Diazzi et al.	327/109
5,617,016	4/1997	Borghi et al.	323/284
5,619,403	4/1997	Ishikawa et al.	363/21
5,621,629	4/1997	Hemminger et al.	363/56
5,640,317	6/1997	Lei	363/49

OTHER PUBLICATIONS

H. S. Hoffman, Jr. et al, Proportional Drive Supply with Diversion Control, IBM Technical Disclosure Bulletin, vol. 21, No. 12, May 1979, pp. 4904–4905.

A. Halperin, 'Primary Regulated Dual Power Supply', IBM Technical Disclosure Bulletin, vol. 21, No. 10, Mar. 1979, pp. 4299–4300.

"5–W dc–dc converters aim at telecomm applications", Electronic Design vol. 31, No. 15, Jul. 21, 1983, pp 227.

"Combined Switch–Mode Power Amplifier and Supply", IBM Technical Disclosure Bulletin, vol. 28, No. 3, Aug. 1985, pp. 1193–1195.

R. Bruckner, et al, "Optimizing Converter Design and Performance Utilizing Micro Controller System Feedback Control", Proceedings of Powercon 8, E–2, 1981, pp 1–10.

B. Pelly et al, OPower MOSFETs take the load off switching supply design, Electronic Design, Feb. 1983, pp 135–139.

D. Azzis et al, Flyback on Card Power Supply, IBM Technical Disclosure Bulletin, vol. 23, No. 4, Sep. 1980, pp. 1477–1478.

A.J. Bowen et al, Power Supply with Optical Isolator, IBM Technical Disclosure Bulletin vol. 14, No. 11, Apr. 1972, pp. 3320.

"Off–Line Power Supply Control Technique Using a Single Transformer to Feed Back Three Control Signals", IBM Technical Disclosure Bulletin, vol. 32, No. 8A, Jan. 1990, pp. 272–273.

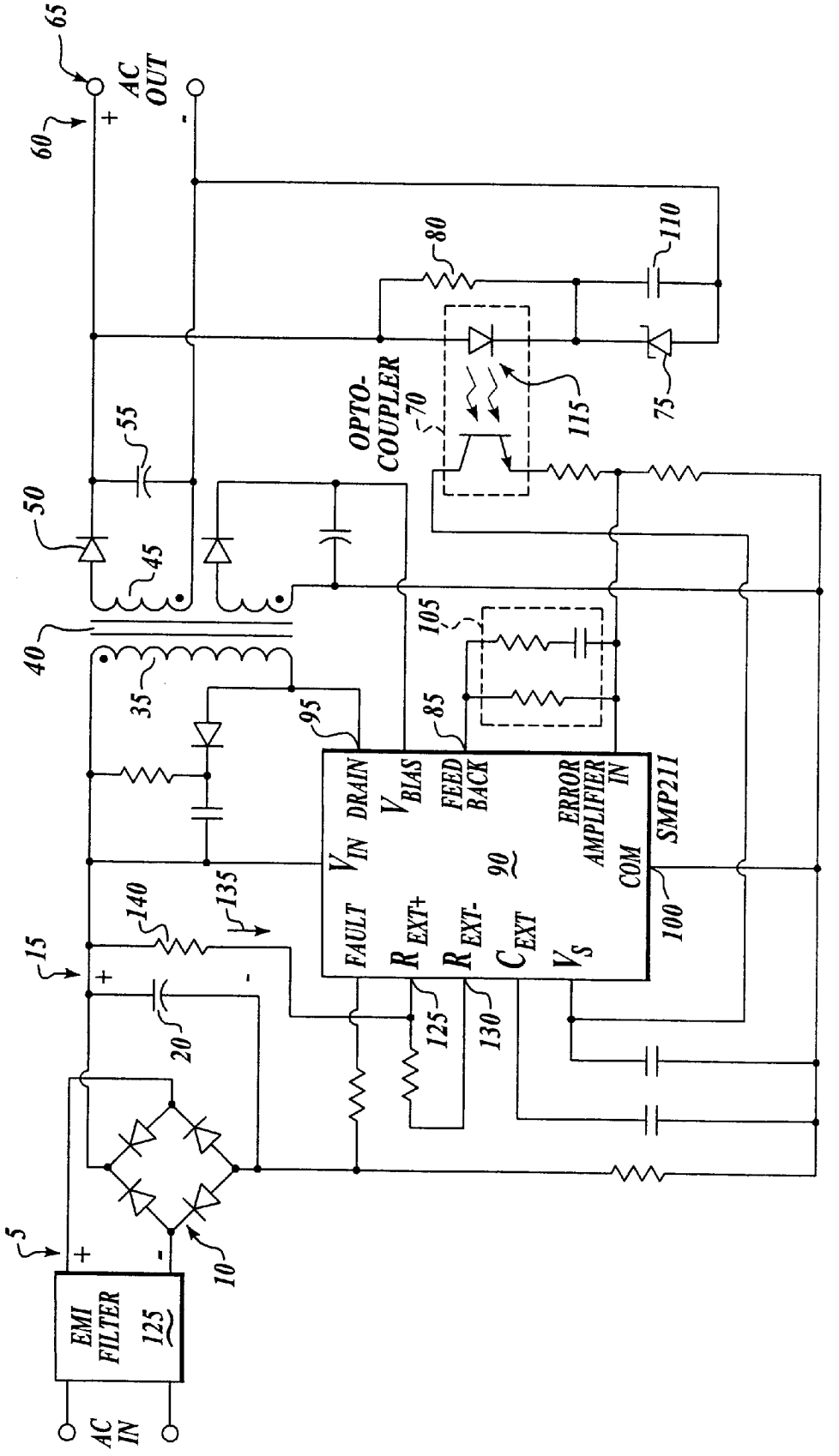

Fig. 1 (PRIOR ART)

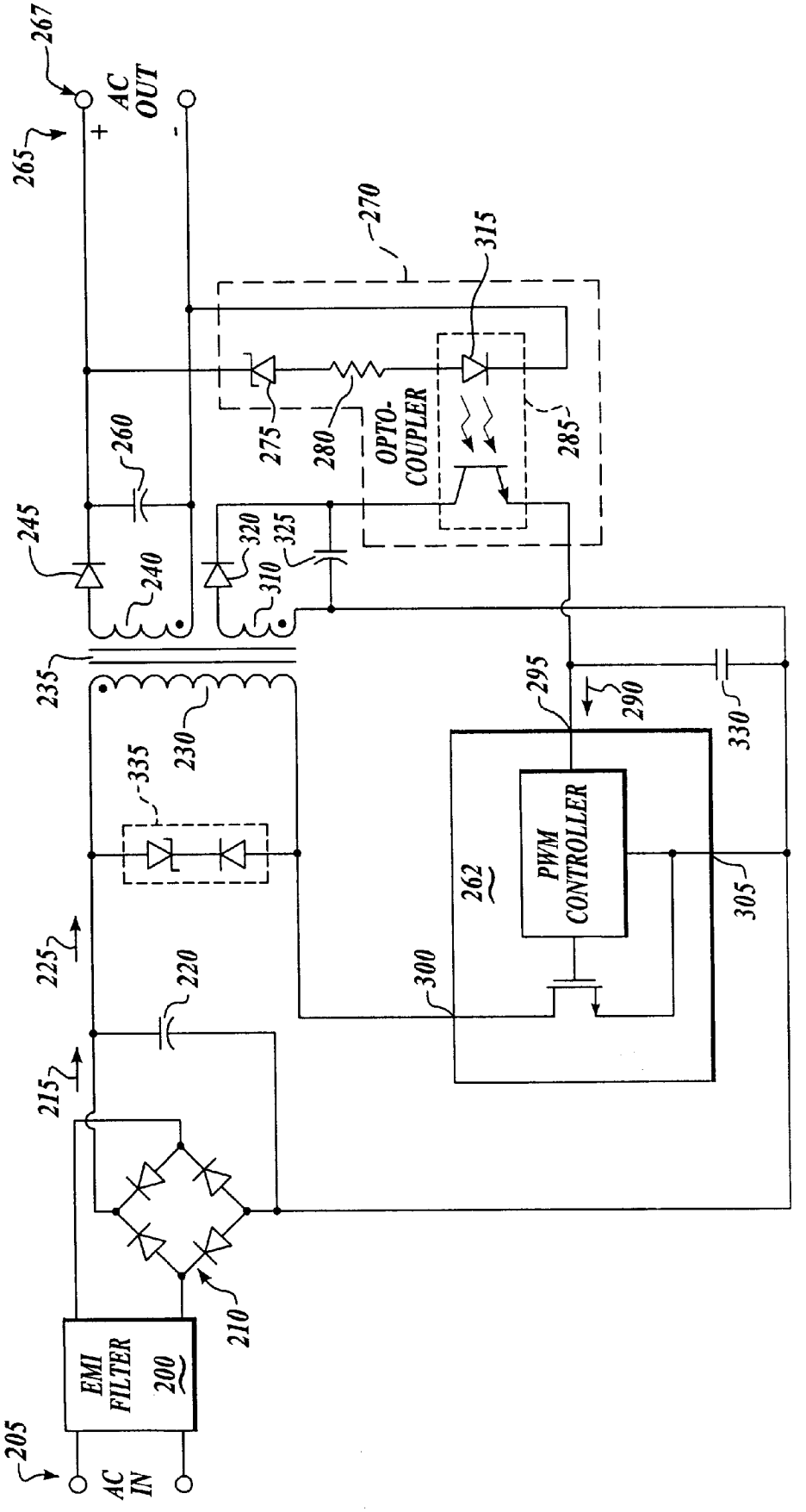
267
AC OUT
+
-
265
270
315
OPTO-COUPLER
275
280
285
260
245
240
320
325
310
235
230
335
295
290
330
262
PWM CONTROLLER
305
225
220
300
215
210
EMI FILTER
200
205
AC IN

Fig. 2

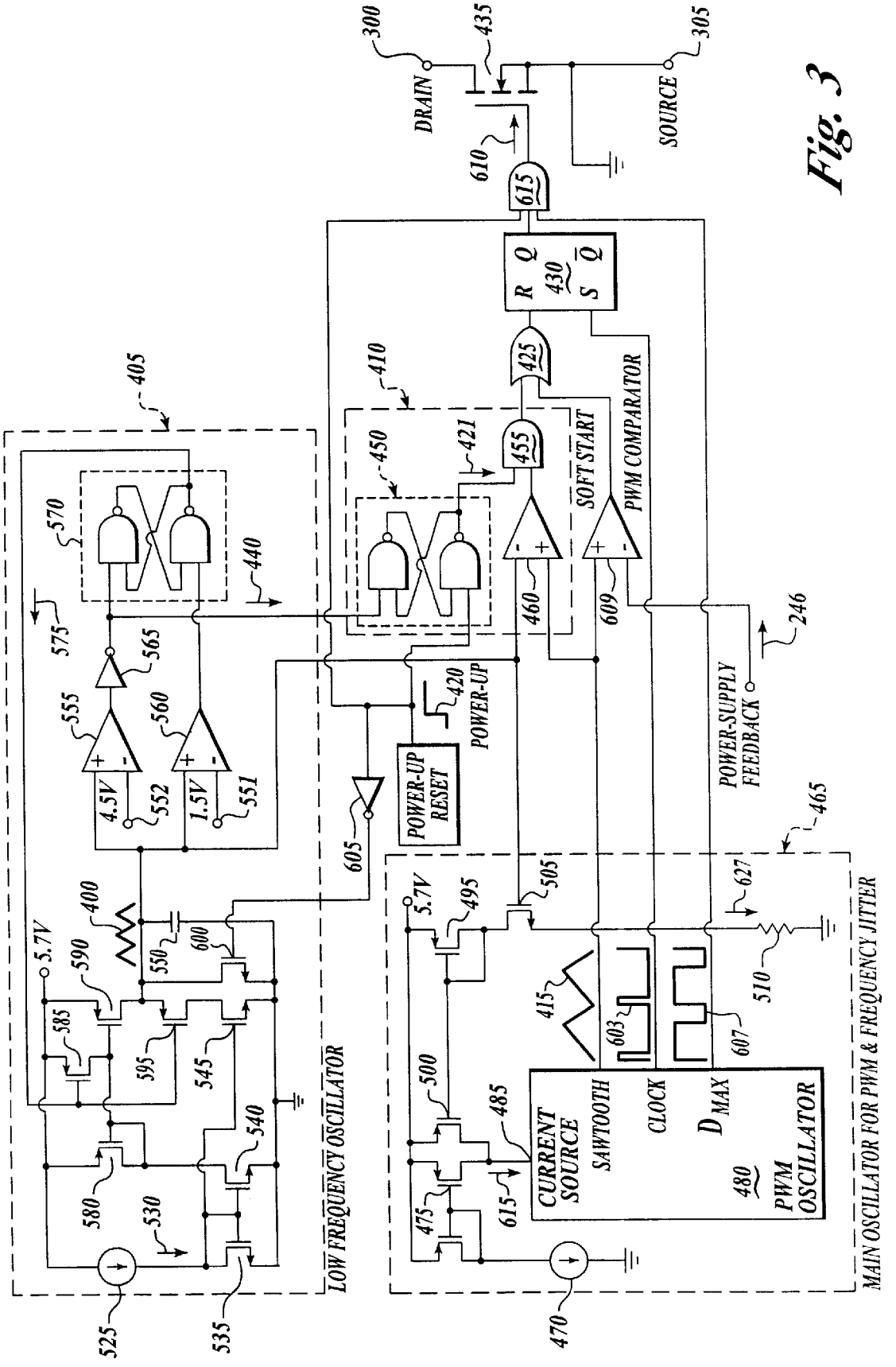
DRAIN
SOURCE
300
305
435
610
615
R Q
430
S Q̄
425
410
405
450
421
455
SOFT START
PWM COMPARATOR
570
440
575
565
555
560
4.5V
552
1.5V
551
460
609
246
POWER-SUPPLY FEEDBACK
420
POWER-UP
POWER-UP RESET
605
465
5.7V
400
590
585
550
600
595
545
540
580
530
525
535
LOW FREQUENCY OSCILLATOR
495
505
627
510
415
603
607
500
485
475
615
CURRENT SOURCE
SAWTOOTH
CLOCK
D MAX
480
PWM OSCILLATOR
470
MAIN OSCILLATOR FOR PWM & FREQUENCY JITTER

Fig. 3

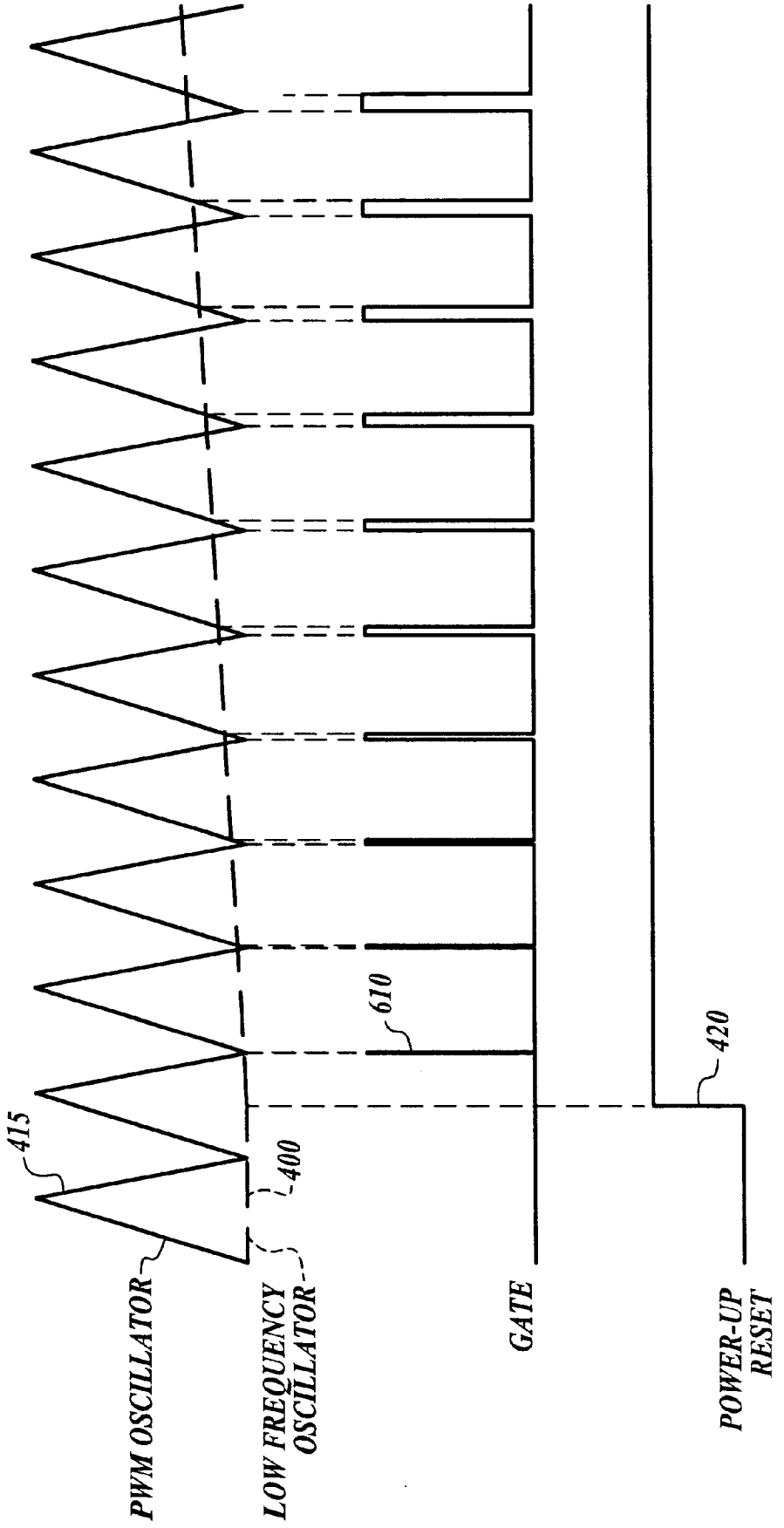
415
400
610
420
PWM OSCILLATOR
LOW FREQUENCY OSCILLATOR
GATE
POWER-UP RESET

Fig. 4

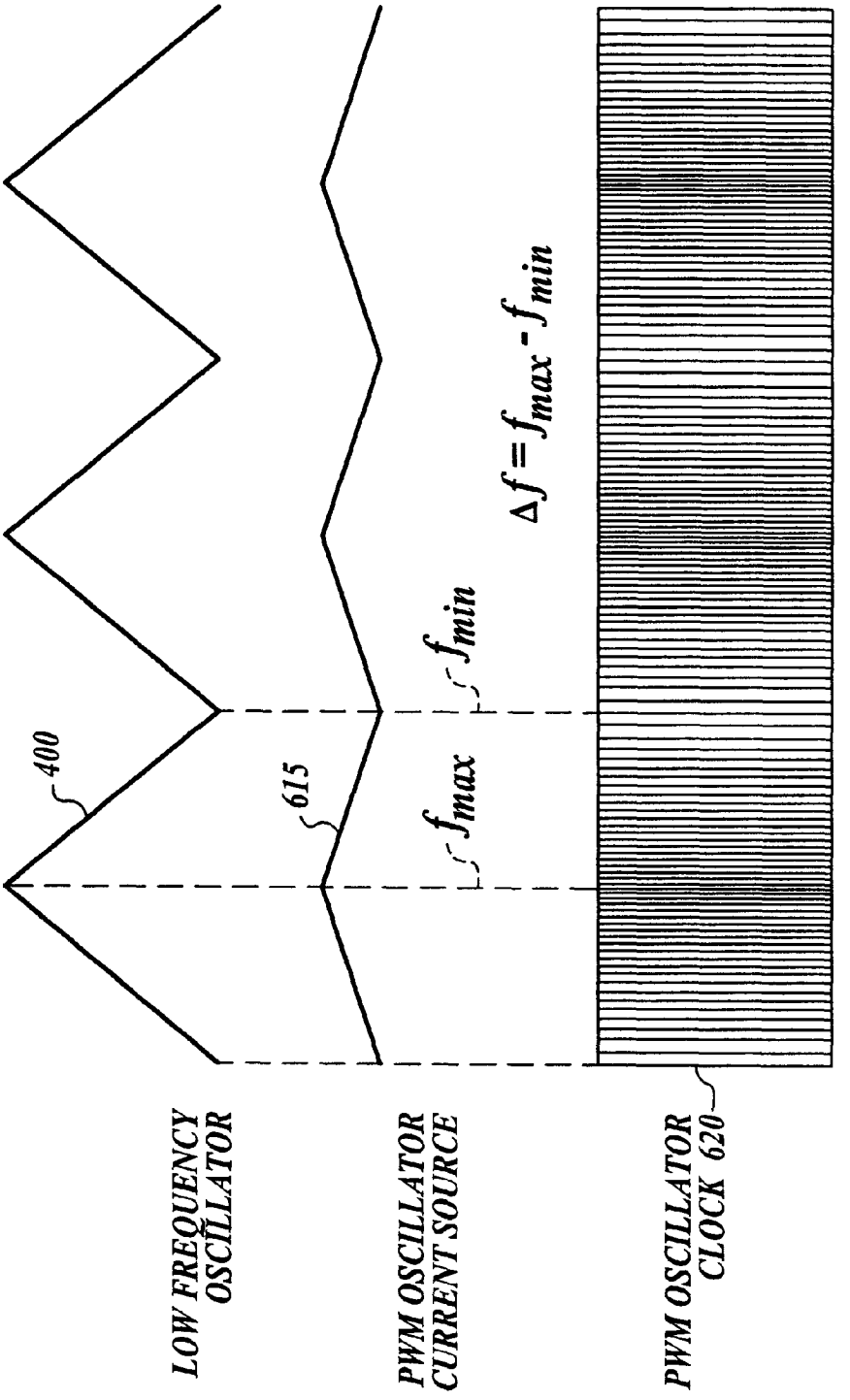
400
615
f_{max}
f_{min}
$\Delta f = f_{max} - f_{min}$
LOW FREQUENCY OSCILLATOR
PWM OSCILLATOR CURRENT SOURCE
PWM OSCILLATOR CLOCK 620

Fig. 5

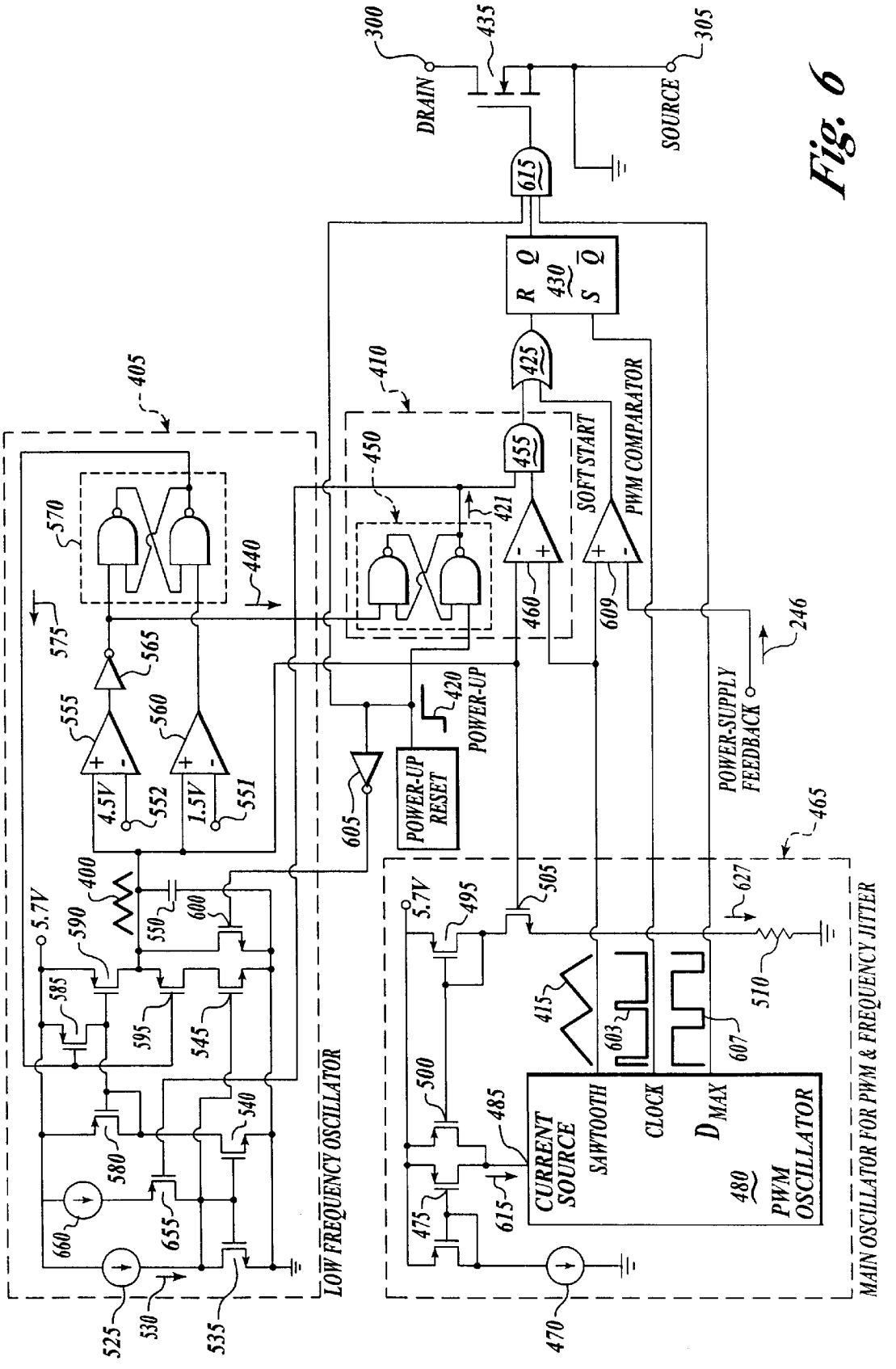
DRAIN
SOURCE
300
435
305
615
R Q
430
S Q̄
425
455
SOFT START
PWM COMPARATOR
410
450
421
460
609
405
570
440
575
565
555
560
4.5V
552
1.5V
551
420
POWER-UP
POWER-UP RESET
605
POWER-SUPPLY FEEDBACK
246
465
400
5.7V
590
550
600
585
595
545
580
540
660
655
525
530
535
LOW FREQUENCY OSCILLATOR
495
505
627
415
603
607
510
500
485
CURRENT SOURCE
SAWTOOTH
CLOCK
D MAX
480
PWM OSCILLATOR
475
615
470
MAIN OSCILLATOR FOR PWM & FREQUENCY JITTER

Fig. 6

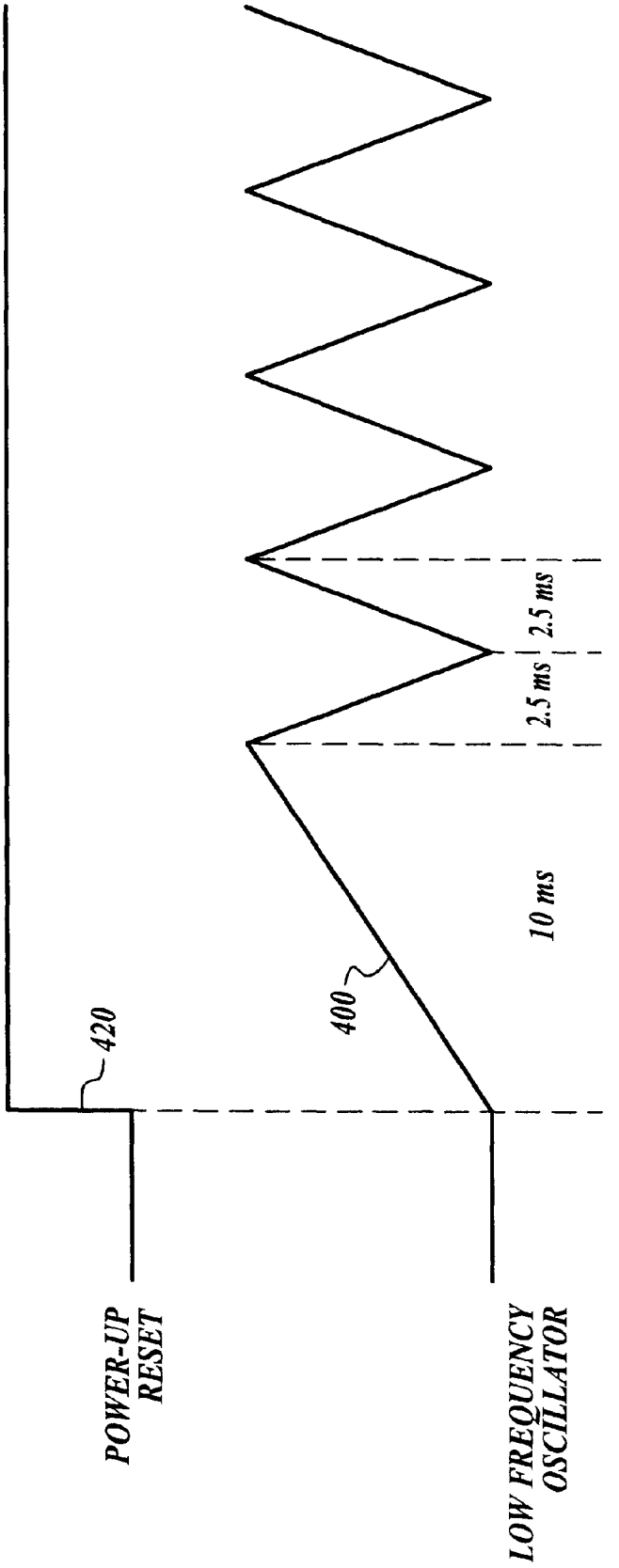
POWER-UP RESET
LOW FREQUENCY OSCILLATOR
420
400
10 ms
2.5 ms
2.5 ms

Fig. 7

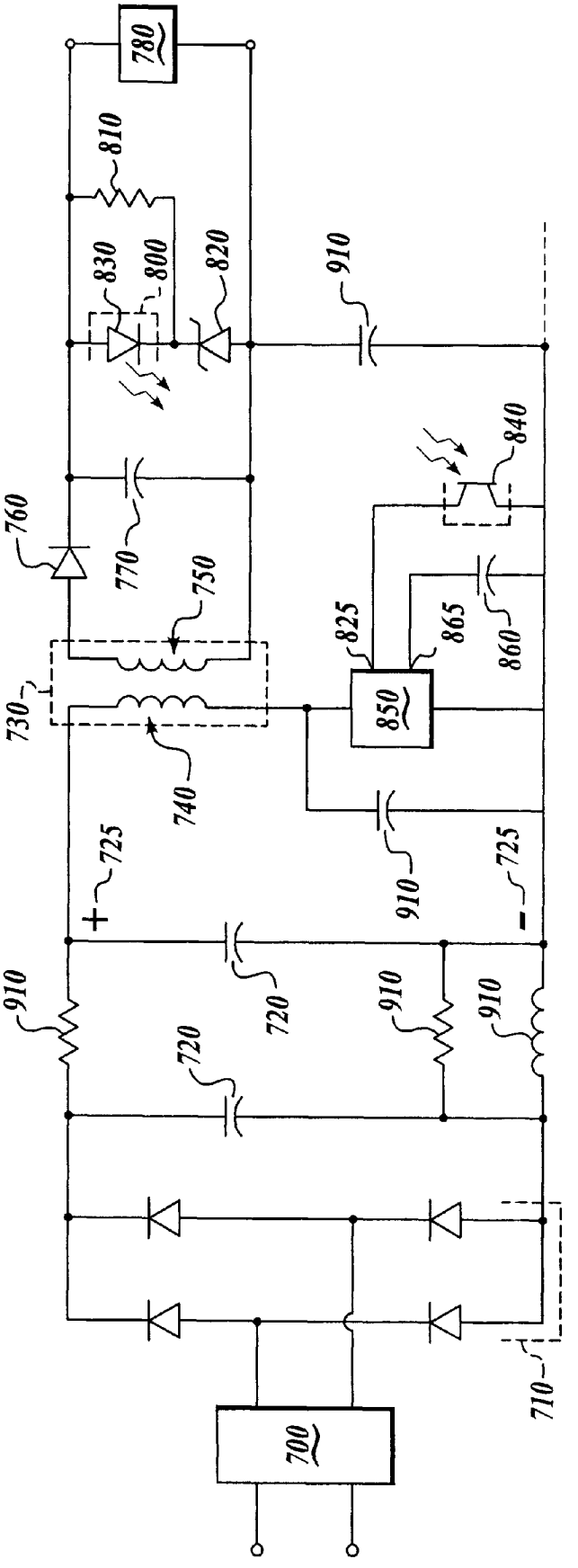
780
810
830
800
820
910
840
760
770
750
825
865
860
730
850
740
725
910
725
910
720
910
910
720
710
700

Fig. 8

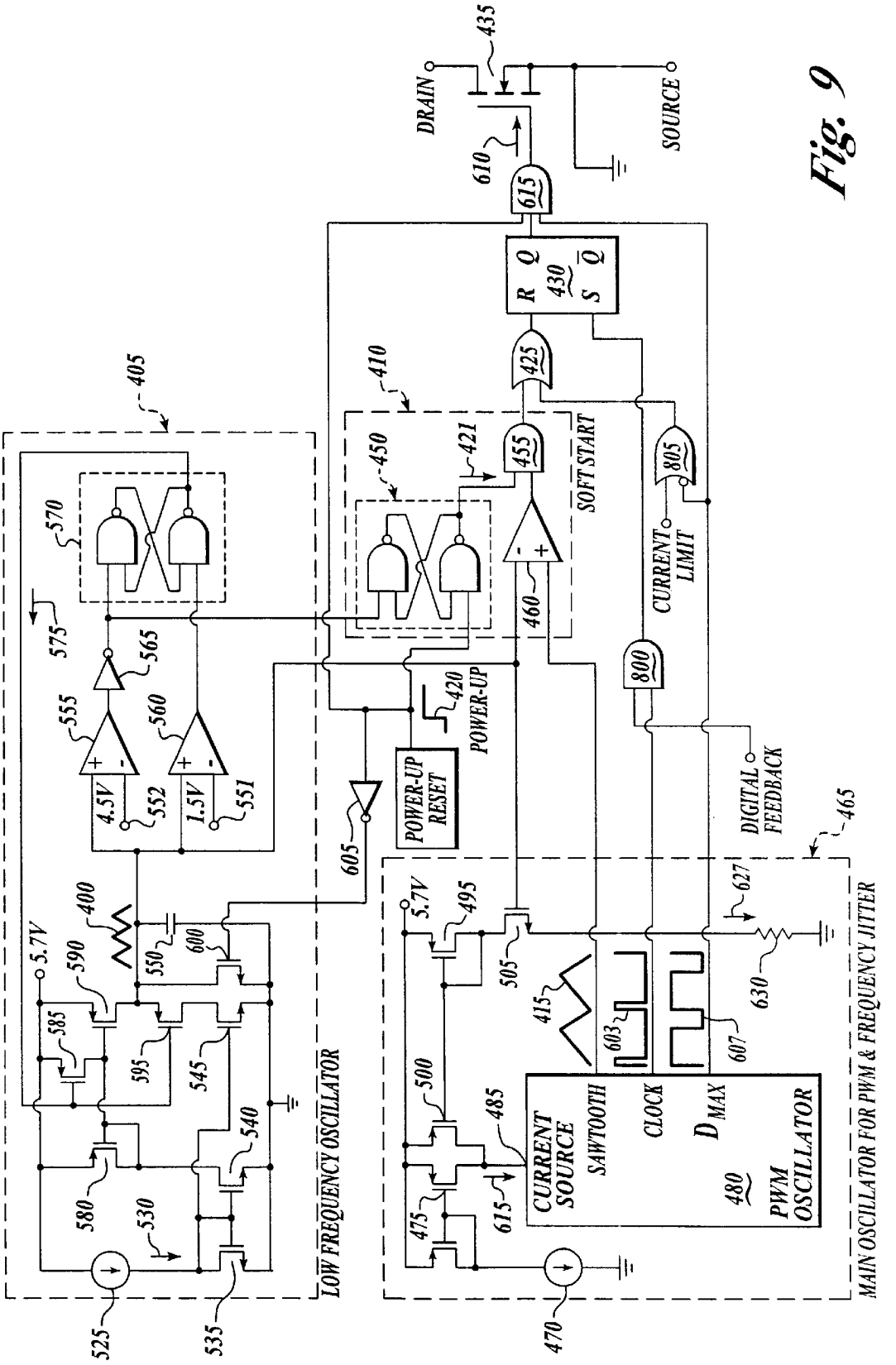
DRAIN
SOURCE
435
610
615
R Q
S Q
430
425
410
450
421
455
SOFT START
805
CURRENT LIMIT
800
460
420
POWER-UP
POWER-UP RESET
605
405
570
575
565
555
560
4.5V
1.5V
552
551
400
590
550
600
5.7V
585
595
545
540
580
530
525
535
LOW FREQUENCY OSCILLATOR
DIGITAL FEEDBACK
465
627
630
495
505
415
603
607
500
485
475
615
CURRENT SOURCE
SAWTOOTH
CLOCK
D MAX
480
PWM OSCILLATOR
470
MAIN OSCILLATOR FOR PWM & FREQUENCY JITTER

Fig. 9

OFFLINE CONVERTER WITH INTEGRATED SOFTSTART AND FREQUENCY JITTER

BACKGROUND

1. Field of the Invention

The field of the present invention pertains to the field of power supplies and among other things to the regulation of power supplies.

2. Background of the Invention

Power supplies that convert an AC mains voltage to a DC voltage for use by integrated electronic devices, amongst other devices, are known. The power supplies are required to maintain the output voltage, current or power within a regulated range for efficient and safe operation of the electronic device. Switches that operate according a pulse width modulated control to maintain the output voltage, current, or power of the power supply within a regulated range are also known. These switches utilize an oscillator and related circuitry to vary the switching frequency of operation of the switch, and therefore regulated the power, current or voltage that is supplied by the power supply.

A problem with utilizing pulse width modulated switches is that they operate at a relatively high frequency compared to the frequency of the AC mains voltage, which results in a high frequency signal being generated by the power supply. This high frequency signal is injected back into the AC mains input and becomes a component of the AC mains signal. The high frequency signals are also radiated by the power supply as electromagnetic waves. These high frequency signals add to the Electromagnetic Interference (EMI) of the power supply, and in fact are the largest contributors to the EMI of the power supply. The EMI generated by the power supply can cause problems for communications devices in the vicinity of the power supply and the high frequency signal which becomes a component of the AC mains signal will be provided to other devices in the power grid which also causes noise problems for those devices. Further, the radiated EMI by the power supply can interfere with radio and television transmissions that are transmitted over the air by various entities.

To combat the problem of EMI, several specifications have been developed by the Federal Communications Commission (FCC) in the United States and the European Community (EC) have established specification that specify the maximum amount of EMI that can be produced by classes of electronic devices. Since power supplies generate a major component of the EMI for electronic devices, an important step in designing a power supply is minimizing the EMI provided by the power supply to levels with the acceptable limits of the various standards. Since, a power supply can be utilized in many different countries of the world, the EMI produced should be within the most stringent limits worldwide to allow for maximum utilization of the power supply.

A known way of minimizing the EMI provided by the power supply is by adding an EMI filter to the input of the power supply. An EMI filter generally utilizes at least one inductor, capacitor and resistor in combination. However, the greater EMI produced by the power supply the larger the components that are utilized as part of the EMI filter. The cost of the EMI filter is in large part determined by the size of the inductor and capacitor utilized. The longer the components, the higher the cost of the power supply. Further, simply utilizing an EMI filter does not address the radiated EMI.

Another problem associated with pulse width modulated switches results from operation of the power supply at start up. At start up, the voltage, current and power at the output of the power supply will essentially be zero. The pulse width modulated switch will then conduct for the maximum possible amount of time in each cycle of operation. The result of this is a maximum inrush current into the power supply. The maximum inrush current is greater than the current that is utilized during normal operation of the power supply. The maximum inrush current stresses the components of power supply and switch. Stress is specifically a problem for the switch, or transistor, the transformer of the power supply, and the secondary side components of the power supply. The stress caused by the maximum inrush current decreases the overall life of the power supply and increases the cost of the power supply because the maximum rating of the components used in the power supply to not destruct from the inrush currents will be greater than the maximum rating required for normal operation.

Further, when the pulse width modulated switch conducts for the maximum possible amount of time in each cycle of operation the voltage, current and power at the output of the power supply rise rapidly. Since the feedback circuit of the power supply often does not respond as fast as the operating frequency of the switch, the rapid rise of the voltage, current and power will often result in an overshoot of the maximum voltage in the regulation range which will cause damage to the device being supplied power by the power supply.

Referring to FIG. **1** a known power supply that attempts to minimize EMI and reduce startup stress is depicted. A rectifier **10** rectifies the filtered AC mains voltage **5**, from EMI filter **120**, input by the AC mains to generate a rectified voltage **15**. Power supply capacitor **20** then generates a substantially DC voltage with a ripple component. The rectified voltage **15** with ripple component is provided to the primary winding **35** of transformer **40** that is used to provide power to secondary winding **45**. The output of secondary winding **45** is provided to secondary rectifier **50** and secondary capacitor **55** that provide a secondary DC voltage **60** at the power supply output **65** to the device that is coupled to the power supply.

In order to maintain the secondary DC voltage within a regulate range a feedback loop including an optocoupler **70**, zener diode **75** and a feedback resistor **80** provides a signal indicative of the voltage at the power supply output **65** to feedback pin **85** of pulse width modulated switch **90**. The voltage magnitude at the feedback terminal is utilized to vary the duty cycle of a switch coupled between the drain terminal **95** and common terminal **100** of the pulse width modulated switch **90**. By varying the duty cycle of the switch the average current flowing through the primary winding and therefore the energy stored by the transformer **40** which in turn controls the power supplied to the power supply output **65** is kept within the regulated range. A compensation circuit **105** is coupled to the feedback pin **85** in order to lower the bandwidth of the frequency of operation of the pulse width modulator.

Inrush currents are minimized at start up by use of soft start capacitor **110**. Soft start functionality is termed to be a functionality that reduces the inrush currents at start up. At this instant a current begins to flow through feedback resistor **80** and thereby into soft start capacitor **110**. As the voltage of soft start capacitor **110** increases slowly, current will flow through light emitting diode **115** of optocoupler **70** thereby controlling the duty cycle of the switch. Once the voltage of the soft start capacitor **110** reaches the reverse breakdown voltage of zener diode **75** current will flow through zener diode **75**. The approach described above will reduce the inrush currents into the power supply, however,

it will be several cycles before the light emitting diode **115** will begin conducting. During the several cycles the maximum inrush current will still flow through the primary winding and other secondary side components. During these cycles the transformer may saturate, and therefore the transformer may have to be designed utilizing a higher core size than would be required for normal operation even with the use of soft start capacitor as in FIG. **1**.

To reduce the EMI output by the power supply an EMI filter **120** is utilized. Additionally, pulse width modulated switch **90** is equipped with frequency oscillation terminals **125** and **130**. Frequency oscillation terminal **125** and **130** receive a jitter current **135** that varies according to the ripple component of substantially DC voltage **15**. The jitter current **135** is used to vary the frequency of the saw-toothed waveform generated by the oscillator contained in the pulse width modulated switch **90**. The saw toothed waveform generated by the oscillator is compared to the feedback provided at the feedback pin **85**. As the frequency of the saw toothed waveform varies, so will the switching frequency of the switch coupled between the drain and common terminal. This allows the switching frequency of the switch to be spread over a larger bandwidth, which minimizes the peak value of the EMI generated by the power supply at each frequency. By reducing the EMI the ability to comply with government standards is increased, because the government standards specify quasi-peak and average values at given frequency levels. Varying the frequency of operation of the pulse width modulated switch by varying the oscillation frequency of the oscillator is referred to as frequency jitter.

A problem associated with the EMI reduction scheme described with respect to FIG. **1** is that the ripple component will have variances due to variations in the line voltage and output load. Additionally, since the ripple may vary, design and the component value of EMI resistor **140** is difficult to determine and correspondingly design of the power supply becomes problematic.

SUMMARY OF THE INVENTION

In one embodiment the present invention comprises a pulse width modulated switch comprising a switch that allows a signal to be transmitted between a first terminal and a second terminal according to a drive signal. The pulse width modulated switch also comprises a frequency variation circuit that provides a frequency variation signal and an oscillator that provides an oscillation signal having a frequency that varies within a frequency range according to the frequency variation signal. The oscillator further provides a maximum duty cycle signal comprising a first state and a second state. The pulse width modulated circuit further comprises a drive circuit that provides the drive signal when the maximum duty cycle signal is in the first state and a magnitude of the oscillation signal is below a variable threshold level.

Another embodiment of the present invention comprises a pulse width modulated switch comprising a switch comprising a control input, the switch allowing a signal to be transmitted between a first terminal and a second terminal according to a drive signal. The pulse width modulated switch also comprises an oscillator that provides a maximum duty cycle signal comprising an on-state and an off-state, a drive circuit that provides the drive signal, and a soft start circuit that provides a signal instructing said drive circuit to disable the drive signal during at least a portion of said on-state of the maximum duty cycle.

In an alternate embodiment the present invention comprises a regulation circuit comprising a switch that allows a signal to be transmitted between a first terminal and a second terminal according to a drive signal, a drive circuit that provides the drive signal and a soft start circuit that provides a signal instructing the drive circuit to disable the drive signal.

In yet another embodiment the present invention comprises a regulation circuit comprising a switch that allows a signal to be transmitted between a first terminal and a second terminal according to a drive signal, a frequency variation circuit that provides a frequency variation signal, and a drive circuit that provides a drive signal for a maximum time period of a time duration cycle. The time duration of the cycle varies according to the frequency variation signal.

In the above referenced embodiments the pulse width modulated switch or regulation circuit may comprise a monolithic device.

An object of an aspect of the present invention is directed to a pulse width modulated switch that has integrated soft start capabilities.

Another object of an aspect of the present invention is directed toward a pulse width modulated switch that has integrated frequency variation capabilities.

Yet another object of an aspect of the present invention is directed toward a pulse width modulated switch that has integrated frequency variation capabilities and integrated soft start capabilities.

A further object of an aspect of the present invention is directed toward a low cost regulated power supply that has both soft start and frequency variation capabilities.

This and other objects and aspects of the present inventions are taught, depicted and described in the drawings and the description of the invention contained herein.

BRIEF DESCRIPTION OF THE DRAWINGS

FIG. **1** is a known power supply utilizing a pulse width modulated switch, and external soft start, and frequency jitter functionality.

FIG. **2** is a presently preferred power supply utilizing an pulse width modulated switch according to the present invention.

FIG. **3** is a presently preferred pulse width modulated switch according to the present invention.

FIG. **4** is a timing diagram of the soft start operation of the presently preferred pulse width modulated switch according to the present invention.

FIG. **5** is a timing diagram of the frequency jitter operation of the presently preferred pulse width modulated switch according to the present invention.

FIG. **6** is an alternate presently preferred pulse width modulated switch according to the present invention.

FIG. **7** is a timing diagram of the operation of the alternate presently preferred pulse width modulated switch of FIG. **6** according to the present invention.

FIG. **8** is a presently preferred power supply utilizing a regulation circuit according to the present invention.

FIG. **9** is a presently preferred regulation circuit according to the present invention.

DESCRIPTION OF THE PREFERRED EMBODIMENT

Referring to FIG. **2**, EMI filter **200** is coupled to an AC mains voltage **205**. The AC mains voltage **205** is rectified by rectifier **210**. The rectified voltage **215** is provided to power

supply capacitor **220** which provides a substantially DC voltage **225**. The substantially DC voltage **225** is provided to the primary winding **230** of transformer **235** which stores the energy provided to the primary winding **230**. When the primary winding **230** is no longer receiving energy, energy is delivered by the transformer **235** to the secondary winding **240**. The voltage induced across the secondary winding **240** is rectified by rectifier **245** and then transformed into secondary substantially DC voltage **265** by secondary capacitor **260** and provided to the power supply output **267**.

Energy is no longer provided to the primary winding **230** when the pulse width modulated switch **262**, which is coupled to the primary winding **230**, ceases conduction. Pulse width modulated switch **262** is a switch that is controlled by a pulse width modulated signal. Pulse width modulated switch **262** conducts and ceases conduction according to a duty cycle, that is in part determined by feedback from the power supply output **267**. Pulse width modulated switch **262** is a switch that operates according to pulse width modulated control. Feedback to the pulse width modulated switch **262** is accomplished by utilization of feedback circuit **270**, which is presently preferred to comprise a zener diode **275** in series with a resistor **280** and optocoupler **285**. Optocoupler **285** provides a feedback current **290** to feedback terminal **295** of pulse width modulated switch **262**. The feedback current is utilized to vary the duty cycle of a switch coupled between the first terminal **300** and second terminal **305** and thus regulate the output voltage, current or power of the power supply.

Although, it is presently preferred that the output voltage is utilized for feedback, the present invention is also capable of utilizing either the current or power at the power supply output **267** without departing from the spirit and scope of the present invention.

A portion of the current supplied at the feedback terminal **295** is utilized to supply bias power for operation of the pulse width modulated switch **262**. The remainder of the current input at the feedback terminal **295** is utilized to control the duty cycle of the pulse width modulated switch **262**, with the duty cycle being inversely proportional to the feedback current.

A bias winding **310** is utilized to bias optocoupler **285** so that a feedback current can flow when light emitting diode **315** of optocoupler **285** conducts. The power supplied by the bias winding **310** is also used to charge pulse width modulation capacitor **330**, the energy from which is utilized to power the pulse width modulated switch **262**.

Overvoltage protection circuit **335** is utilized to prevent overvoltages from propagating through to the transformer **235**.

Pulse width modulated switch **262** is supplied power during start up of the power supply by current flowing into the first terminal **300**. An embodiment of one type of apparatus and method for designing a configuration for providing power to pulse width modulated switch through first terminal **300** is disclosed in commonly owned U.S. Pat. No. 5,014,178 which is incorporated herein by reference in its entirety.

The drain terminal **300**, source terminal **305** and feedback terminal **295** are the electrical input and/or output points of the pulse width modulated switch **262**. They need not be part of a monolithic device or integrated circuit, unless the pulse width modulated switch **262** is implemented utilizing a monolithic device or integrated circuit.

Pulse width modulated switch **262** also may have soft start capabilities. When the device to which the power supply is coupled is switched on, a power up signal is generated within the internal circuitry of pulse width modulated switch **262**. The power up signal is used to trigger soft start circuitry that reduces the duty cycle of the switch that operates within the pulse width modulated switch **262** for a predetermined period of time, which is presently preferred to be ten (10) milliseconds. Once soft start operation is completed, pulse width modulated switch **262** operates according to its regular duty cycle.

Alternatively, or in addition to soft start functionality, pulse width modulated switch **262** may also have frequency jitter functionality. That is, the switching frequency of the pulse width modulated switch **262** varies according to an internal frequency variation signal. This has an advantage over the frequency jitter operation of FIG. **1** in that the frequency range of the presently preferred pulse width modulated switch **262** is known and fixed, and is not subject to the line voltage or load magnitude variations. At low powers, those less than approximately ten (10) watts, the common mode choke which is often utilized as part of the EMI filter **120** can be replaced with inductors or resistors.

As can be seen when comparing the power supply of FIG. **1** to that of FIG. **2** the number of components utilized is reduced. This reduces the overall cost of the power supply as well as reducing its size.

Referring to FIG. **3**, frequency variation signal **400** is utilized by the pulse width modulated switch **262** to vary its switching frequency within a frequency range. The frequency variation signal **400** is provided by frequency variation circuit **405**, which preferably comprises an oscillator that operates at a lower frequency than main oscillator **465**. The frequency variation signal **400**, is presently preferred to be a triangular waveform that preferrably oscillates between four point five (4.5) volts and one point five (1.5) volts. Although the presently preferred frequency variation signal **400** is a triangular waveform, alternate frequency variation signals such as ramp signals, counter output signals or other signals that vary in magnitude during a fixed period of time may be utilized as the frequency variation signal.

The frequency variation signal **400** is provided to soft start circuit **410**. During operation soft start circuit **410** is also provided with pulse width modulation frequency signal **415** and power up signal **420**. Soft start enable signal **421** goes high at power up and remains high until oscillator signal **400** reaches its peak value for the first time. Soft start circuit **410** will provide a signal to or-gate **425** to reset latch **430** thereby deactivating conduction by the switch **435**, which is presently preferred to be a MOSFET. Soft start circuit **410** will instruct switch **435** to cease conduction when the soft start enable signal **421** is provided and the magnitude of the frequency variation signal **400** is less than the magnitude of pulse width modulation signal **415**. In other words, start up circuit **410** will allow the switch **435** to conduct as long as soft start enable signal is high and the magnitude of the pulse width modulation signal **415** is below the magnitude of frequency variation signal **400** as depicted in FIG. **4**. In this way, the inrush current at startup will be limited for all cycles of operation, including the first cycle. By limiting the inrush current during all cycles of startup operation, the maximum current through each of the components of the power supply is reduced and the maximum current rating of each component can be decreased. The reduction in the ratings of the components reduces the cost of the power supply. Soft start signal **440** will no longer be provided by the frequency variation circuit **405** when the frequency variation signal **400** reaches its peak magnitude.

Operation of soft start circuit **410** will now be explained. Soft start circuit **410** comprises a soft start latch **450** that at

its set input receives the power up signal **420** and its reset input receives the soft start signal **440**. Soft start enable signal **421** is provided to one input of soft start and-gate **455** while the other input of soft start and-gate **455** is provided with an output from soft start comparator **460**. The output of soft start comparator **460** will be high when the magnitude of frequency variation signal **400** is less than the magnitude of pulse width modulation oscillation signal **415**.

The pulse width modulated switch **262** depicted in FIG. **3** also has frequency jitter functionality to help reduce the EMI generated by the power supply and pulse width modulated switch **262**. Operation of the frequency jitter functionality will now be explained. Main oscillator **465** has a current source **470** that is mirrored by mirror current source **475**. Main oscillator drive current **615** is provided to the current source input **485** of PWM oscillator **480**. The magnitude of the current input into current source input **485** of PWM oscillator **480** determines the frequency of the pulse width modulation oscillation signal **415** which is provided by PWM oscillator **480**. In order to vary the frequency of pulse width modulation oscillation signal **415**, an additional current source **495** is provided within main oscillator **465**. The additional current source **495** is mirrored by additional current source mirror **500**. The current provided by additional current source **495** is varied as follows. Frequency variation signal **400** is provided to the gate of main oscillator transistor **505**. As the magnitude of frequency variation signal **400** increases so does the voltage at the source of main oscillator transistor **505**, due to the increasing voltage at the gate of main oscillation transistor and the relatively constant voltage drop between the gate and source of the main oscillation transistor **505**. As the voltage at the source of main oscillation transistor **505** increases so does the current flowing through the main oscillation resistor **510**. The current flowing through main oscillation resistor **510** is the same as the current flowing through additional current source **495** which is mirrored by additional current source mirror **500**. Since, the presently preferred frequency variation signal **400** is a triangular waveform having a fixed period, the magnitude of the current input by additional current source mirror **500** will vary linearly with the magnitude of the rising and falling edges of the frequency variation signal **400**. If the frequency variation signal **400** is a ramp signal, the frequency would linearly rise to a peak and then immediately fall to is lowest value. In this way, the current provided to current source input **485** of PWM oscillator **480** is varied in a known fixed range that allows for easy and accurate frequency spread of the high frequency current generated by the pulse width modulated switch. Further, the variance of the frequency is determined by the magnitude of the current provided by additional current source mirror **500**, which is in turn a function of the resistance of main oscillation resistor **510**.

Frequency variation circuit **405** includes a current source **525** that produces a fixed magnitude current **530** that determines the magnitude of the frequency of the frequency variation signal **400**. Although, the presently preferred current **530** has a fixed magnitude, the frequency variation signal can be generated utilizing a variable magnitude current, if a variable current is generated the frequency spread would not be fixed in time but would vary with the magnitude of current **530**. The fixed magnitude current **530** is fed into first transistor **535**, mirrored by second transistor **540** and fed into third transistor **545**. The frequency variation signal **400** is generated by the charging and discharging of frequency variation circuit capacitor **550**. Frequency variation circuit capacitor **550** is presently preferred to have a relatively low capacitance, which allows for integration into a monolithic chip in one embodiment of the pulse width modulated switch **262**. The frequency variation signal **400** is provided to upper limit comparator **555** and lower limit comparator **560**. The output of upper limit comparator **555** will be high when the magnitude of the frequency variation signal **400** exceeds the upper threshold voltage **552** which is presently preferred to be four point five (4.5) volts. The output of lower limit comparator **560** will be high when the magnitude of frequency variation signal **400** exceeds lower threshold voltage **557** which is presently preferred to be one point five volts (1.5) volts. The output of upper limit comparator **555** is provided to the frequency variation circuit inverter **565** the output of which is provided to the reset input of frequency variation circuit latch **570**. The set input of frequency variation circuit latch **570** receives the output of lower limit comparator **560**. In operation, the output of lower limit comparator **560** will be maintained high for the majority of each cycle of frequency variation signal **400** because the magnitude of frequency variation signal will be maintained between upper threshold **552**, 4.5 volts, and the lower threshold **557**, 1.5 volts. The output of upper limit comparator **555** will be low until the magnitude of frequency variation signal **400** exceeds upper level threshold **552**. This means that the reset input will receive a high signal until the magnitude of the frequency variation signal **400** rises above the upper threshold signal **552**.

The charge signal **575** output by frequency variation circuit latch **570** will be high until the frequency variation signal **400** exceeds the upper threshold limit signal **552**. When the charge signal **575** is high, transistors **585** and **595** are turned off. By turning off transistors **585** and **595** current can flow into frequency variation circuit capacitor **550**, which steadily charges frequency variation circuit capacitor **550** and increases the magnitude of frequency variation signal **400**. The current that flows into frequency variation circuit capacitor **550** is derived from current source **525** because the current through transistor **590** is mirrored from transistor **580**, which is mirrored from transistor **535**.

During power up, when power-up signal **420** is low, the output of inverter **605** is high which turns on transistor **600** causing frequency variation signal **400** to go low. The frequency variation signal **400** is presently preferred to start from its lowest level to perform the soft start function during its first cycle of operation.

Steady-state operation of the pulse width modulated switch **262**, i.e. non start up operation, will now be described. PWM oscillator **480** provides pulse width modulation oscillation signal **415** to pulse width modulation comparator **609**, the output of which will be high when the magnitude of pulse width modulation signal **415** is greater than the magnitude of a feedback signal **296** which is a function of the input provided at feedback terminal **295**. When the output of pulse width modulation comparator **609** is high or-gate **425** is triggered to go high, which in turn resets pulse width modulation latch **430**, removing the on signal from the control input of switch **435**, thereby turning off switch **435**. Pulse width modulation latch **430** is set by clock signal **603**, which is provided at the beginning of each cycle of pulse width modulation oscillator **480**. Drive circuit **615**, which is presently preferred to be an and-gate, receives the output of pulse width modulation latch **430**, power up signal **420**, and maximum duty cycle signal **607**. As long as each one of the signals is high, drive signal **610** is provided to the gate of MOSFET **435**, which is coupled between first terminal **300** and second terminal **305** of the pulse width modulated switch **262**. When any of the output of pulse

width modulation latch **430**, power up signal **420**, or maximum duty cycle signal **607** goes low drive signal **610** is no longer provided and switch **435** ceases conduction.

Referring to FIG. **4**, frequency variation signal **400** preferably has a period, which is greater than that of pulse width modulated oscillation signal **415**. The presently preferred period for frequency variation signal **400** is twenty (20) milliseconds, in order to allow for a smooth start up period which is sufficiently longer than the period of pulse width modulated signal **415** which is presently preferred to be ten (10) microseconds. Drive signal **610** will be provided only when the magnitude of pulse width modulated signal **415** is less than the magnitude of frequency variation signal **400**. Further, frequency variation signal **400** will be preferably initiated starting from low voltage when power up signal **420** is provided.

Referring to FIG. **5**, frequency variation signal **400** which is presently preferred to have a constant period is provided to the main oscillator **465**. The magnitude of the pulse width modulator current **615** will approximately be the magnitude of frequency variation signal **400** divided by the resistance of resistor **510** plus the magnitude of the current produced by current source **470**. In this way the pulse width modulator current **615** will vary with the magnitude of the frequency variation signal **400**. The result is that the frequency of pulse width modulation signal is varied according to the magnitude of this current. It is presently preferred that the pulse width modulator current source produces a constant current having a magnitude of twelve point one (12.1) microamperes, and that frequency variation signal induced current **627** varies between zero (0) and eight hundred (800) nanoamperes. Thereby spreading the frequency of operation of the pulse width modulation oscillator **480** and reducing the average magnitude and the quasi-peak magnitude at all frequency levels of the EMI generated by the power supply.

Referring to FIG. **6**, an alternate presently preferred pulse width modulated switch **262** includes all of the same components as described with respect to FIG. **3**. In addition to these components, a second frequency variation circuit current source **660** and transistor **655** are added to the frequency variation circuit **405**. Transistor **655** is activated only when the output of soft start latch **450** goes low. When transistor **655** is activated the current provided to the frequency variation circuit **405** increases as does the frequency of frequency variation signal **400**. However, transistor **655** will only be turned on when the output of soft start latch **450** goes low, i.e. when the magnitude of frequency variation signal **400** first reaches the upper threshold after power up. The period of frequency variation signal **400** will then increase after its first half cycle. This will decreases the period of the cycle during which the frequency is spread, without decreasing the frequency range. The benefit of the decreased cycle period will further decrease the quasi-peak levels of the EMI due to spending less time at each frequency level.

Referring to FIG. **7**, operation of the frequency variation circuit **405** of FIG. **6** is depicted. Frequency variation signal **400** will preferably have a period often (10) milliseconds for its first half cycle. After that, when the transistor **655** is turned on the period is preferably decreased to five (5) milliseconds. Pulse width modulated switch **262** is presently preferred to be a monolithic device.

Referring to FIG. **8**, a power supply comprises a bridge rectifier **710** that rectifies an input AC mains voltage. Power supply capacitors **720** charge with the rectified AC mains voltage to maintain an input DC voltage **725**. A presently preferred range for input DC voltage **725** is approximately one hundred (100) to four hundred (400) volts to allow for operation based upon worldwide AC mains voltages which range between eighty five (85) and two hundred sixty five (265) volts. The presently preferred power supply also includes harmonic filter components **910** which in combination with capacitors **720** reduce the harmonic current injected back into the power grid. Transformer **730** includes a primary winding **740** magnetically coupled to secondary winding **750**. The secondary winding **750** is coupled to a diode **760** that is designed to prevent current flow in the secondary winding **750** when the regulation circuit **850** is conducting (on-state). A capacitor **770** is coupled to the diode **760** in order to maintain a continuous voltage on a load **780** which has a feedback circuit coupled to it. A presently preferred feedback circuit comprises an optocoupler **800** and zener diode **820**. The output of optocoupler **800** is coupled to the feedback terminal **825** of regulation circuit **850**. The presently preferred regulation circuit **850** switches on and off at a duty cycle that is constant at a given input DC voltage **725**. A regulation circuit power supply bypass capacitor **860** is coupled to and supplies power to regulation circuit **850** when the regulation circuit **850** is in the on-state.

Operation of the power supply will now be described. An AC mains voltage is input through EMI filter **700** into bridge rectifier **710** which provides a rectified signal to power supply capacitors **720** that provide input DC voltage **725** to primary winding **740**. Regulation circuit **850**, which preferably operates at a constant frequency and about constant duty cycle at a given input DC voltage **725**, allows current to flow through primary winding **740** during its on state of each switching cycle and acts as open circuit in its off state. When current flows through primary winding **740** transformer **730** is storing energy, when no current is flowing through primary winding **740** any energy stored in transformer **730** is delivered to secondary winding **750**. Secondary winding **750** then provides the energy to capacitor **770**. Capacitor **770** delivers power to the load **780**. The voltage across the load **780** will vary depending on the amount of energy stored in the transformer **730** in each switching cycle which is in turn dependent on the length of time current is flowing through primary winding **740** in each switching cycle which is presently preferred to be constant at a given input DC voltage **725**. The presently preferred regulation circuit **850** allows the voltage delivered to the load to be maintained at a constant level.

It is presently preferred that the sum of the voltage drop across optocoupler **800** and the reverse break down voltage of zener diode **820** is approximately equal to the desired threshold level. When the voltage across the load **780** reaches the threshold level, current begins to flow through the optocoupler **800** and zener diode **820** that in turn is used to disable the regulation circuit **850**. Whenever regulation circuit **850** is in the off-state the regulation circuit power supply bypass capacitor **860** is charged to the operating supply voltage, which is presently preferred to be five point seven (5.7) volts by allowing a small current to flow from bypass terminal **865** to the regulation circuit power supply bypass capacitor **860**. Regulation circuit power supply bypass capacitor **860** is used to supply power to operate regulation circuit **850** when it is in the on-state.

When the regulation circuit **850** is disabled, an open circuit condition is created in primary winding **740** and transformer **730** does not store energy. The energy stored in the transformer **730** from the last cycle of regulation circuit **850** is then delivered to secondary winding **750** which in turn supplies power to the load **780**. Once the remaining

energy in transformer **750** is delivered to the load **780** the voltage of the load **780** will decrease. When the voltage at the load **780** decreases below the threshold level, current ceases to flow through optocoupler **800** and regulation circuit **850** resumes operation either instantaneously or nearly instantaneously.

The presently preferred regulation circuit **850** has a current limit feature. The current limit turns off the regulation circuit **850**, when the current flowing through the regulation circuit **850** rises above a current threshold level. In this way regulation circuit **850** can react quickly to changes such as AC ripple that occur in the rectified AC mains voltage, and prevents the propagation of the voltage changes to the load. The current limit increases the responsiveness of the regulation circuit to input voltage changes and delivers constant power output independent of the AC mains input voltage.

Although the presently preferred power supply of FIG. **8** utilizes current mode regulation and a feedback circuit that includes an optocoupler and zener diode, the present invention is not to be construed as to be limited to such a feedback method or circuit. Either current or voltage mode regulation may be utilized by the present invention without departing from the spirit and scope of the present invention so long as a signal indicative of the power supplied to the load is supplied to the feedback terminal **825** of the regulation circuit **850**. Additionally, although the presently preferred power supplies both utilize an optocoupler and zener diode as part of feedback circuits other feedback circuits may be utilized by the present invention without departing from the spirit and scope of the present invention.

Regulation circuit **850** also may have integrated soft start capabilities. When the device to which the power supply is coupled is switched on, a power up signal is generated within the internal circuitry of regulation circuit **850**. A power up signal is used to trigger soft start circuitry that reduces the duty cycle of the switch that operates within the pulse width modulated switch **262** for a predetermined period of time, which is presently preferred to be ten (10) milliseconds. Once soft start operation is completed, regulation circuit **850** operates according to its regular duty cycle.

Alternatively, or in addition to soft start functionality, regulation circuit **850** may also have frequency jitter functionality. That is, the switching frequency of the regulation circuit **850** varies according to an internal frequency variation signal. This has an advantage over the frequency jitter operation of FIG. **1** in that the frequency range of the presently regulation circuit **850** is known and fixed, and is not subject to the line voltage or load magnitude variations.

Referring to FIG. **9**, frequency variation circuit **405** and main oscillator **465** function as described with respect to FIG. **3**. In operation it is the variance of the high and low states of maximum duty cycle signal **607** that generates the frequency jitter functionality of the regulation circuit **850**. A presently preferred regulation circuit **850** and its steady-state operation is depicted and described in copending patent application Ser. No. 09/032,520 which is hereby incorporated by reference in its entirety.

The regulation circuit of FIG. **9** can be modified to include a second current source to further increase the period of main oscillation signal **415** which achieves the same result and function as described with respect of FIGS. **6** and **7**.

The soft start functionality of the presently preferred regulation circuit **850** of FIG. **9**, will shorten the on-time of switch **435** to less than the time of the maximum duty cycle signal **607** as long as the soft start enable signal **421** is provided and the magnitude of frequency variation signal **400** is less than the magnitude of main oscillation signal **415**.

The presently preferred regulation circuit **850** preferably comprises a monolithic device.

While the embodiments, applications and advantages of the present invention have been depicted and described, there are many more embodiments, applications and advantages possible without deviating from the spirit of the inventive concepts described herein. Thus, the inventions are not to be restricted to the preferred embodiments, specification or drawings. The protection to be afforded this patent should therefore only be restricted in accordance with the spirit and intended scope of the following claims.

What is claimed is:

1. A pulse width modulated switch comprising:

a first terminal;

a second terminal;

a switch comprising a control input, said switch allowing a signal to be transmitted between said first terminal and said second terminal according to a drive signal provided at said control input;

a frequency variation circuit that provides a frequency variation signal;

an oscillator that provides an oscillation signal having a frequency range, said frequency of said oscillation signal varying within said frequency range according to said frequency variation signal, said oscillator further providing a maximum duty cycle signal comprising a first state and a second state; and

a drive circuit that provides said drive signal when said maximum duty cycle signal is in said first state and a magnitude of said oscillation signal is below a variable threshold level.

2. The pulse width modulated switch of claim **1** wherein said first terminal, said second terminal, said switch, said oscillator, said frequency variation circuit and said drive circuit comprise a monolithic device.

3. The pulse width modulated switch of claim **1** wherein said frequency variation circuit comprises an additional oscillator that provides said frequency variation signal to said oscillator, said frequency of said oscillation signal varying within said frequency range according to said frequency variation signal.

4. The pulse width modulated switch of claim **1** further comprising a soft start circuit that provides a signal instructing said drive circuit to discontinue said drive signal when said magnitude of said oscillation signal is greater than a magnitude of said frequency variation signal.

5. The pulse width modulated switch of claim **4** wherein said additional oscillator provides a soft start signal, and wherein said soft start circuit ceases operation when said soft start signal is removed.

6. The pulse width modulated circuit of claim **5** wherein said additional oscillator further comprises

a comparator that provides a comparator signal when a magnitude of a reference signal is greater than or equal to a magnitude of said frequency variation signal, and

an inverter that receives said comparator signal and provides said soft start signal.

7. The pulse width modulated switch of claim **1** wherein said frequency of said oscillation signal varies within said frequency range with a magnitude of said frequency variation signal.

8. The pulse width modulated switch of claim **1** wherein said oscillator comprises a an input that receives said

frequency variation signal and a current source, wherein said frequency of said oscillation signal is a function of a sum of a magnitude of a current provided by said current source and a magnitude of said frequency variation signal.

9. The pulse width modulated switch of claim **1** further comprising;

a rectifier comprising a rectifier input and a rectifier output, said rectifier input receiving an AC mains signal and said rectifier output providing a rectified signal;

a power supply capacitor that receives said rectified signal and provides a substantially DC signal;

a first winding comprising a first terminal and a second terminal, said first winding receiving said substantially DC signal, said second terminal of said first winding coupled to said first terminal of said switch; and

a second winding magnetically coupled to said first winding.

10. The pulse width modulated switch of claim **1** wherein said variable threshold level is a function of a feedback signal received at a feedback terminal of said pulse width modulated switch.

11. A regulation circuit comprising:

a first terminal;

a second terminal;

a feedback terminal coupled to disable the regulation circuit;

a switch comprising a control input, said switch allowing a signal to be transmitted between said first terminal and said second terminal according to a drive signal provided at said control input;

a frequency variation circuit that provides a frequency variation signal;

an oscillator that provides an oscillation signal having a frequency range, said frequency of said oscillation signal varying within said frequency range according to said frequency variation signal, said oscillator further providing a maximum duty cycle signal comprising a first state and a second state; and

a drive circuit that provides said drive signal when said maximum duty cycle signal is in said first state and said regulation circuit is not disabled.

12. The regulation circuit of claim **11** wherein said frequency variation circuit comprises an oscillator that provides said frequency variation signal.

13. The regulation circuit of claim **11** further comprising a soft start circuit that provides a signal instructing said drive circuit to discontinue said drive signal according to a magnitude of said frequency variation signal.

14. The regulation circuit of claim **13** further wherein said frequency variation circuit provides a soft start signal, and wherein said soft start circuit ceases operation when said soft start signal is removed.

15. The regulation circuit of claim **14** wherein said frequency variation circuit further comprises

a comparator that provides a comparator signal when a magnitude of a reference signal is greater than or equal to a magnitude of said frequency variation signal, and

an inverter that receives said comparator signal and provides said soft start signal.

16. The regulation circuit of claim **11** wherein said first terminal, said second terminal, said switch, said frequency variation circuit, and said drive circuit comprise a monolithic device.

17. The regulation circuit of claim **11** further comprising;

a rectifier comprising a rectifier input and a rectifier output, said rectifier input receiving an AC mains signal and said rectifier output providing a rectified signal;

a power supply capacitor that receives said rectified signal and provides a substantially DC signal;

a first winding comprising a first terminal and a second terminal, said first winding receiving said substantially DC signal, said second terminal of said first winding coupled to said first terminal of said switch; and

a second winding magnetically coupled to said first winding.

18. The regulation circuit of claim **11** further comprising a current limit circuit that provides a signal instructing said drive circuit to discontinue said drive signal when a current received at said first terminal of said regulation circuit is above a threshold level.

* * * * *

Exhibit B

US006249876B1

(12) **United States Patent**
Balakrishnan et al.

(10) **Patent No.: US 6,249,876 B1**
(45) **Date of Patent: Jun. 19, 2001**

(54) **FREQUENCY JITTERING CONTROL FOR VARYING THE SWITCHING FREQUENCY OF A POWER SUPPLY**

(75) Inventors: **Balu Balakrishnan**; **Alex Djenguerian**, both of Saratoga; **Leif Lund**, San Jose, all of CA (US)

(73) Assignee: **Power Integrations, Inc.**, San Jose, CA (US)

(*) Notice: Subject to any disclaimer, the term of this patent is extended or adjusted under 35 U.S.C. 154(b) by 0 days.

(21) Appl. No.: **09/192,959**

(22) Filed: **Nov. 16, 1998**

(51) **Int. Cl.**[7] **G06F 1/04**
(52) **U.S. Cl.** **713/501**; 713/300; 713/503
(58) **Field of Search** 713/300, 320, 713/322, 500, 501, 503

(56) **References Cited**

U.S. PATENT DOCUMENTS

4,712,169	*	12/1987	Albach	363/89
4,930,063	*	5/1990	Henze et al.	363/91
5,459,392	*	10/1995	Mandelcorn	323/222
6,107,851	*	8/2000	Balakirshnan et al.	327/172

OTHER PUBLICATIONS

Ashok Bindra, "Power–Conversion Chip Cuts Energy Wastage in Off–Line Switchers," *Electronic Design,* pp. 46,48, Oct. 1998.

* cited by examiner

Primary Examiner—Dennis M. Butler
(74) *Attorney, Agent, or Firm*—Blakely, Sokoloff, Taylor & Zafman, LLP.

(57) **ABSTRACT**

EMI emission is reduced by jittering the switching frequency of a switched mode power supply. An oscillator with a control input for varying the oscillator's switching frequency generates a jittered clock signal. In one embodiment, the oscillator is connected to a counter clocked by the oscillator. The counter drives a digital to analog converter, whose output is connected to the control input of the oscillator for varying the oscillation frequency. In another embodiment, the oscillator is connected to a low frequency oscillator whose low frequency output is used to supplement the output of the oscillator for jittering the switching frequency. The invention thus deviates or jitters the switching frequency of the switched mode power supply oscillator within a narrow range to reduce EMI noise by spreading the energy over a wider frequency range than the bandwidth measured by the EMI test equipment.

32 Claims, 6 Drawing Sheets

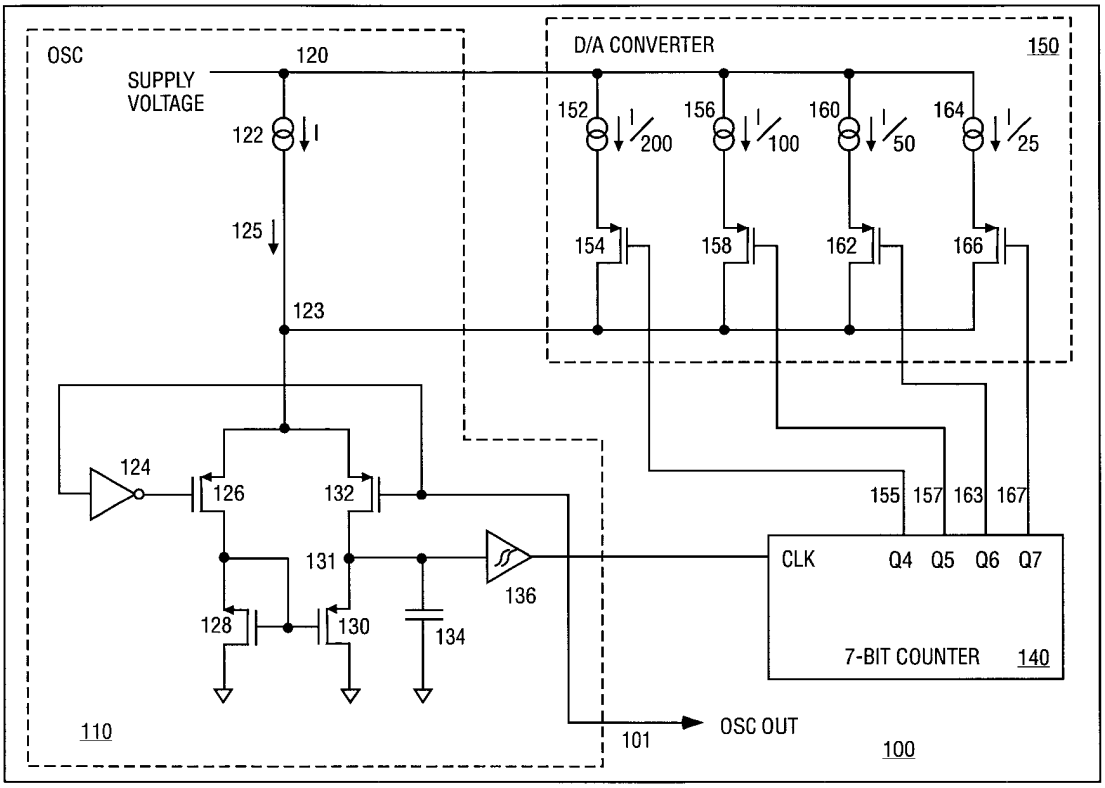

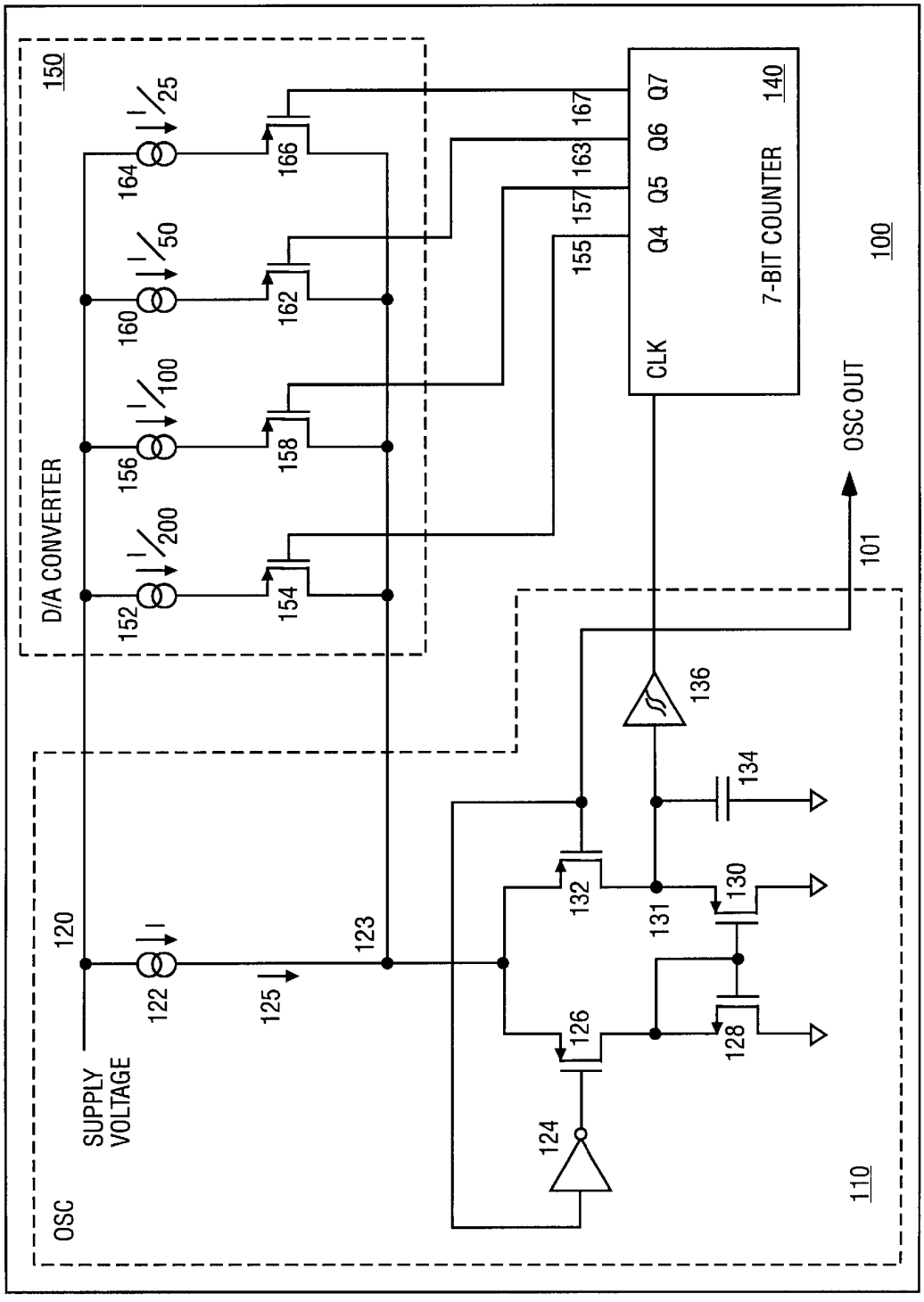
150
D/A CONVERTER
164
1/25
166
160
1/50
162
156
1/100
158
152
1/200
154
167
163
157
155
Q7
Q6
Q5
Q4
CLK
7-BIT COUNTER
140
100
OSC OUT
101
136
134
132
130
131
123
120
122
125
126
128
124
SUPPLY VOLTAGE
OSC
110

FIG. 1

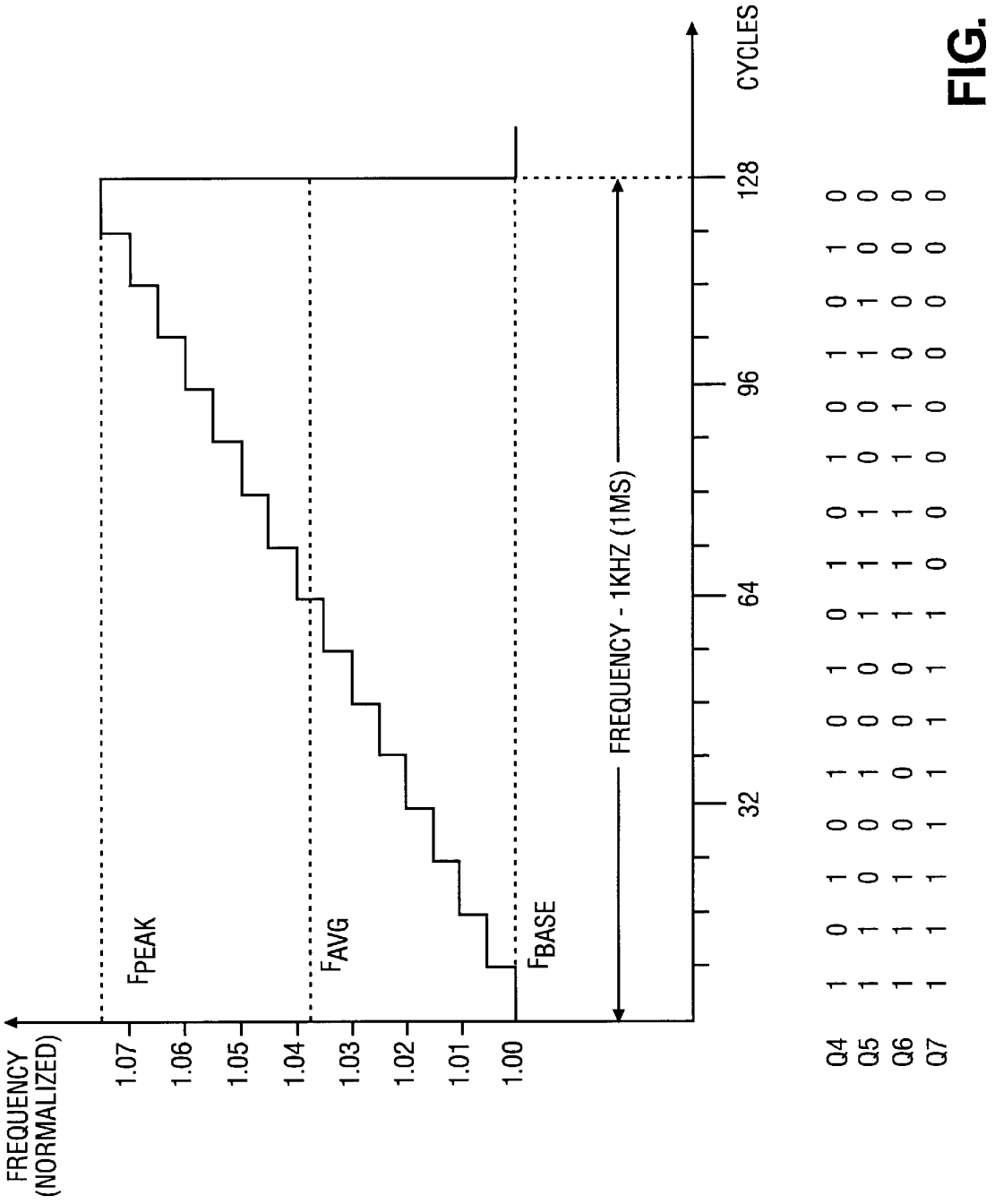
FREQUENCY (NORMALIZED)
1.07
1.06
1.05
1.04
1.03
1.02
1.01
1.00
FPEAK
FAVG
FBASE
FREQUENCY - 1KHZ (1MS)
CYCLES
32
64
96
128
Q4 1 0 1 0 1 0 1 0 1 0 1 0 1 0 1 0
Q5 1 1 0 0 1 0 0 0 1 1 1 1 0 1 0 0
Q6 1 1 1 0 0 0 0 0 1 1 1 1 1 0 0 0
Q7 1 1 1 1 1 1 1 1 1 1 0 0 0 0 0 0

FIG. 2

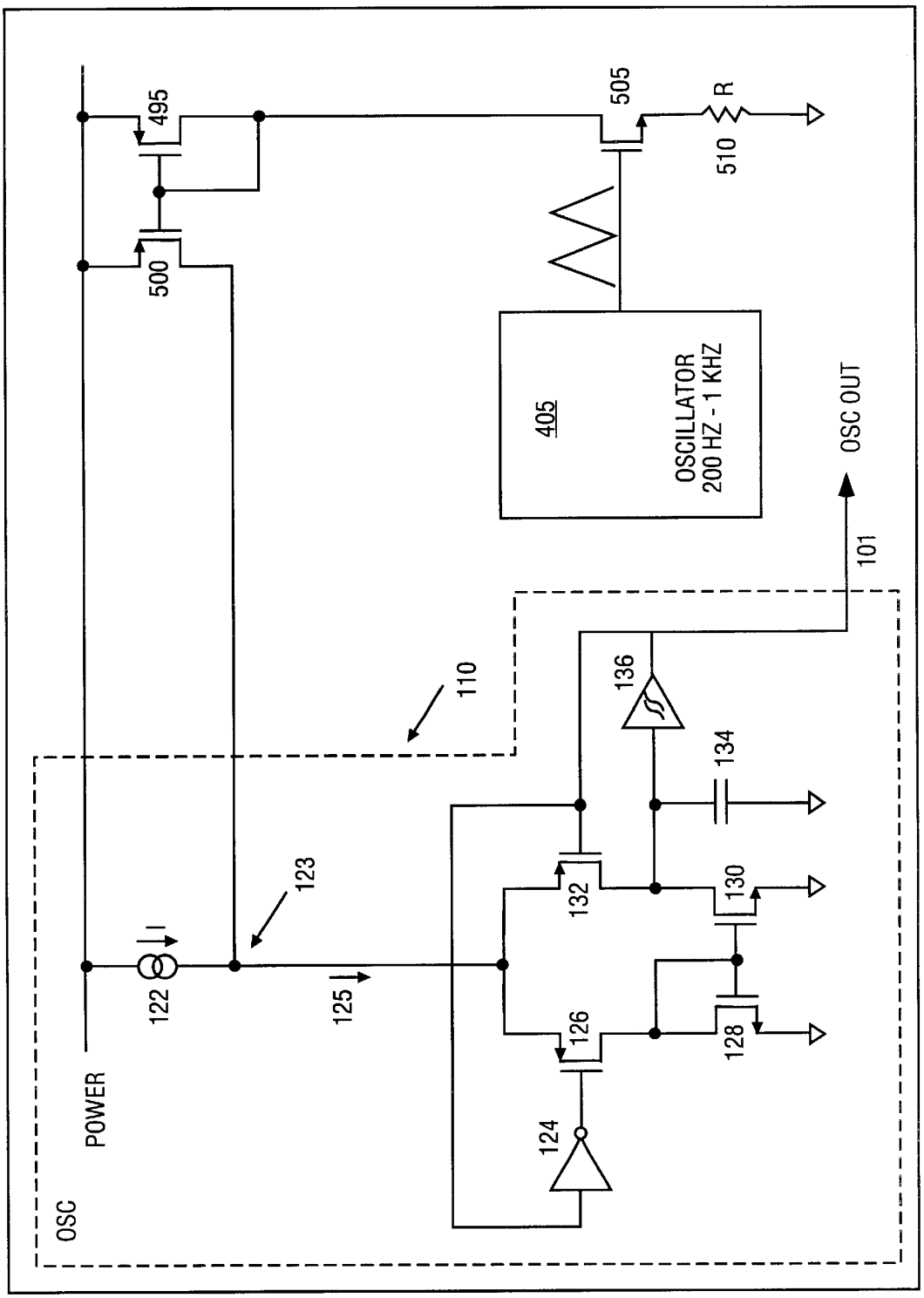
495
505
R
510
500
405
OSCILLATOR
200 HZ - 1 KHZ
OSC OUT
101
110
136
134
123
132
130
122
125
126
128
POWER
124
OSC

FIG. 3

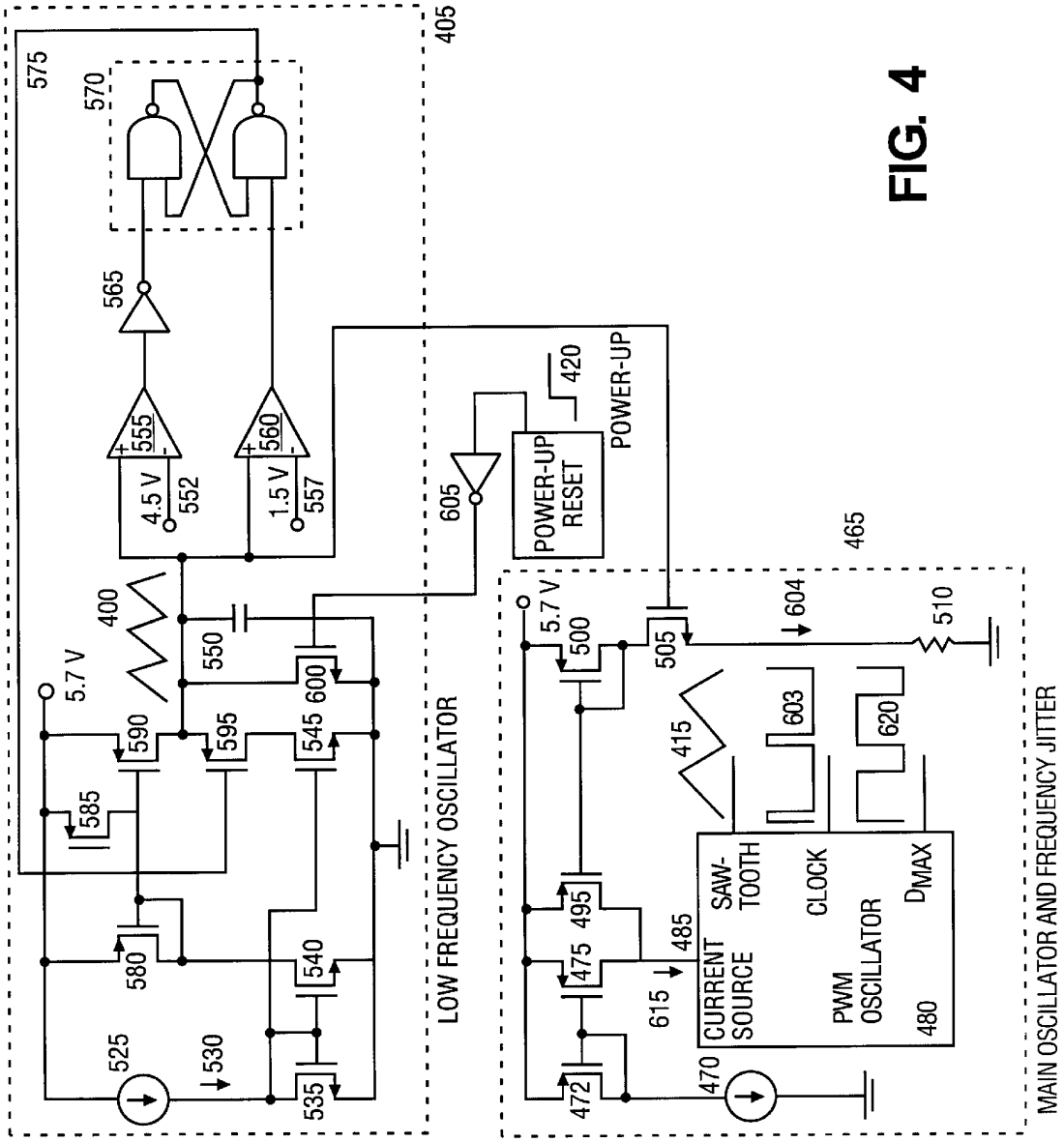
405
575
570
565
555
560
4.5 V
552
1.5 V
557
605
POWER-UP RESET
420
POWER-UP
400
5.7 V
550
590
595
545
600
585
580
540
525
530
535
LOW FREQUENCY OSCILLATOR
465
5.7 V
500
505
604
510
415
603
620
485
495
475
615
472
470
CURRENT SOURCE
SAW-TOOTH
CLOCK
PWM OSCILLATOR
DMAX
480
MAIN OSCILLATOR AND FREQUENCY JITTER

FIG. 4

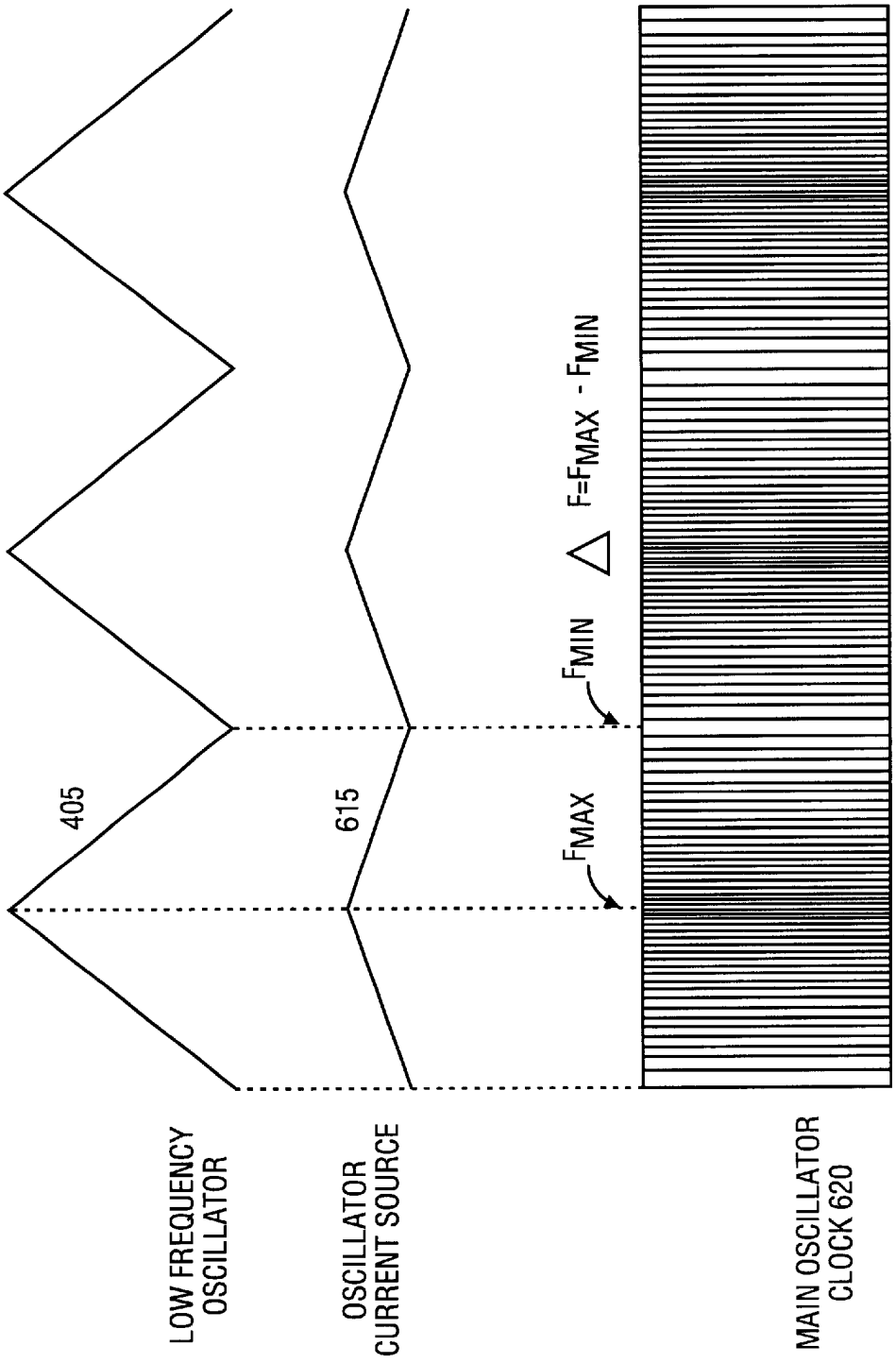
LOW FREQUENCY OSCILLATOR
OSCILLATOR CURRENT SOURCE
MAIN OSCILLATOR CLOCK 620
405
615
FMAX
FMIN
F=FMAX - FMIN

FIG. 5

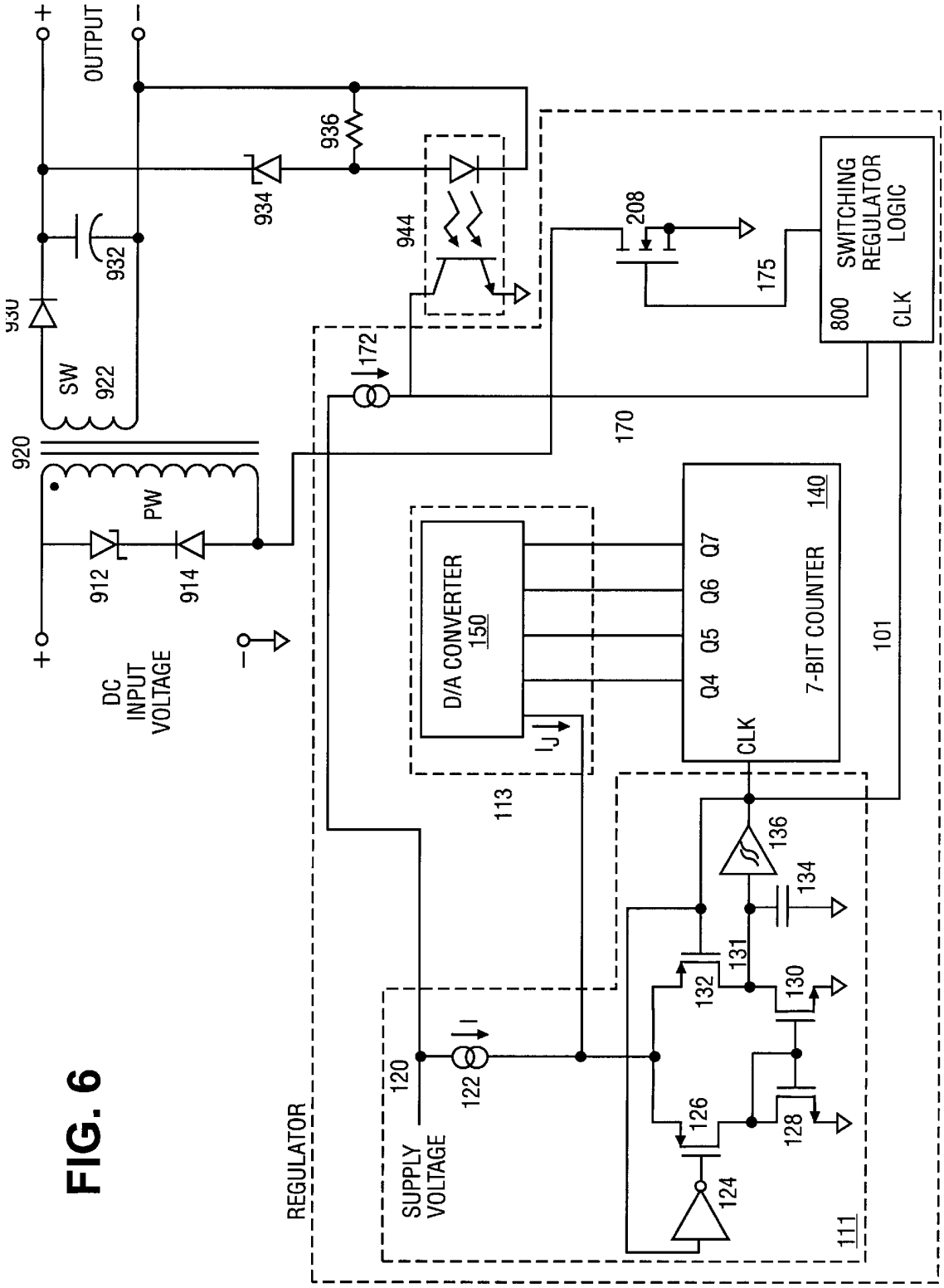
OUTPUT
+
−
936
934
944
932
930
SW
922
920
PW
912
914
DC
INPUT
VOLTAGE
208
175
800
SWITCHING
REGULATOR
LOGIC
CLK
172
170
D/A CONVERTER
150
Q7
Q6
Q5
Q4
7-BIT COUNTER
140
101
CLK
113
136
134
131
132
130
126
128
124
120
122
SUPPLY
VOLTAGE
REGULATOR
111

FIG. 6

FREQUENCY JITTERING CONTROL FOR VARYING THE SWITCHING FREQUENCY OF A POWER SUPPLY

BACKGROUND

The present invention relates to an off-line switched mode control system with frequency jittering.

Many products rely on advanced electronic components to cost-effectively provide the product with the desired functionality. These electronic components require power regulation circuitry to supply them with a clean and steady source of power. The development of switched mode power supply technology has led to power supplies operating at high frequency to achieve small size and high efficiency. Each switched mode power supply typically relies on an oscillator switching at a fixed switching frequency or alternatively a variable frequency (such as in a ringing choke power supply).

Due to the high frequency operation relative to the frequency of an alternating current (AC) power line, switched mode power supplies can exacerbate problems associated with electromagnetic interference (EMI). EMI noise is generated when voltage and current are modulated by the switching power supply. This electrical noise can be transferred to the AC power line.

In addition to affecting the operation of other electronics within the vicinity of the power supply by conduction, EMI induced noise on a power line may radiate or leak from the power line and affect equipment which is not even connected to the power line. Both conducted and radiated electrical noise may adversely affect or interfere with the operation of the electronic equipment. For example, EMI noise generated by the switching power supply can cause problems for communication devices in the vicinity of the power supply. Radiated high frequency noise components may become a part of the AC mains signal and may be provided to other devices in the power grid. Further, power supply radiated EMI can interfere with radio and television transmissions.

To address EMI related interference, several specifications have been developed by government agencies in the United States and in the European Community. These agencies have established specifications that define the maximum amount of EMI that can be produced by various classes of electronic devices. Since power supplies generate a major component of the EMI for electronic devices, an important step in designing such supplies that conform to the specifications is to minimize EMI emission to the acceptable limits of the various specifications.

EMI may be reduced in a power supply by adding snubbers and input filters. These components reduce the noise transferred to the power line and by so doing, also reduce the electric and magnetic fields of noise generated by the power line. While these methods can reduce EMI, they usually complicate the design process as well as increase the production cost. In practice, noise filtering components are added in an ad hoc manner and on a trial-and-error basis during the final design process when EMI is found to exceed the compliance limits specified by the regulatory agencies. This inevitably adds unexpected costs to the products.

Further, extra components can undesirably increase the size and weight of the power supply and thus the resulting product.

SUMMARY OF THE INVENTION

EMI emission is reduced by jittering the switching frequency of a switched mode power supply. In one aspect, a frequency jittering circuit varies the switching frequency using an oscillator for generating a switching frequency signal, the oscillator having a control input for varying the switching frequency. A digital to analog converter is connected to the control input for varying the switching frequency, and a counter is connected to the output of the oscillator and to the digital to analog converter. The counter causes the digital to analog converter to adjust the control input and to vary the switching frequency.

Implementations of the invention include one or more of the following. The oscillator has a primary current source connected to the oscillator control input. A differential switch may be used with first and second transistors connected to the primary current source; a third transistor connected to the first transistor; and a fourth transistor connected to the second transistor at a junction. A capacitor and one or more comparators may be connected to the junction. The digital to analog converter has one or more current sources, with a transistor connected to each current source and to the counter. The primary current source may generate a current I and each of the current sources may generate a current lower than I. The current sources may generate binary weighted currents. The largest current source may generate a current which is less than about 0.1 of I.

In a second aspect, a method for generating a switching frequency in a power conversion system includes generating a primary current; cycling one or more secondary current sources to generate a secondary current which varies over time; and supplying the primary and secondary currents to a control input of an oscillator for generating a switching frequency which is varied over time.

Implementations of the invention include one or more of the following. A counter may be clocked with the output of the oscillator. The primary current may be generated by a current source. If the primary current is I, each of the secondary current sources may generate a supplemental current lower than I and which is passed to the oscillator control input. The supplemental current may be binary-weighted. The largest supplemental current may be less than approximately 0.1 of I.

In another aspect, a method for generating a switching frequency in a power conversion system includes generating a primary voltage; cycling one or more secondary voltage sources to generate a secondary voltage which varies over time; and supplying the primary and secondary voltages to a control input of a voltage-controlled oscillator for generating a switching frequency which is varied over time.

Implementations of the invention include one or more of the following. Where the primary voltage is V, each of the secondary voltage sources may generate a supplemental voltage lower than V which may be passed to the voltage-controlled oscillator. The supplemental voltage may be binary-weighted.

In another aspect, a frequency jittering circuit for varying a power supply switching frequency includes an oscillator for generating a switching frequency signal, the oscillator having a control input for varying the switching frequency; and means connected to the control input for varying the switching frequency.

Implementations of the invention include one or more of the following. The means for varying the frequency may include one or more current sources connected to the control input; and a counter connected to the output of the oscillator and to the one or more current sources. The oscillator may include a primary current source connected to the control

input; and a differential switch connected to the primary current source. The differential switch may have first and second transistors connected to the primary current source; a third transistor connected to the first transistor; and a fourth transistor connected to the second transistor at a junction. A capacitor and a comparator may be connected to the junction. If the primary current source generates a current I, each of the current sources may generate a second current lower than the current I, further comprising a transistor connected to each current source connected to the counter. The means for varying the frequency may include one or more voltage sources connected to the control input; and a counter connected to the output of the oscillator and to the one or more voltage sources. The oscillator may include a primary voltage source connected to the control input; and a differential switch connected to the primary voltage source. The means for varying the frequency may include a capacitor; a current source adapted to charge the capacitor; and means for alternatingly charging and discharging the capacitor. One or more comparators may be connected to the capacitor and the means for alternatingly charging and discharging the capacitor.

In yet another aspect, a power supply includes a transformer, an oscillator for generating a signal having a frequency, the oscillator having a control input for varying the frequency of the signal, the oscillator including a primary current source connected to the control input; a differential switch connected to the primary current source; a capacitor connected to the differential switch; and a comparator connected to the differential switch. The power supply also includes a digital to analog converter connected to the control input, the analog to digital converter having one or more current sources, wherein the primary current source generates a current I and each of the current sources generates a current lower than I. A counter is connected to the output of the oscillator and to the current sources of the digital to analog converter. Further, a power transistor is connected to the primary winding of the transformer so that when the power transistor is modulated, a regulated power supply output is provided.

In another aspect, a power supply includes a transformer connected to an input voltage. The power supply includes an oscillator for generating a signal having a frequency, the oscillator having a control input for varying the frequency of the signal, the oscillator including: a primary current source connected to the control input; a differential switch connected to the primary current source; a capacitor connected to the differential switch; and a comparator connected to the differential switch. A circuit for varying the frequency is connected to the control input, the circuit having a capacitor; a current source adapted to charge and discharge the capacitor; one or more comparators connected to the capacitor to the current source for alternatingly charging and discharging the capacitor. Further, a power transistor is connected to the oscillator and to the primary winding. The power transistor modulates its output in providing a regulated power supply output.

Advantages of the invention include one or more of the following. The jittering operation smears the switching frequency of the power supply over a wide frequency range and thus spreads energy outside of the bandwidth measured by the EMI measurement equipment. By changing the oscillator frequency back and forth, the average noise measured by the EMI measurement equipment is reduced considerably.

Further, the invention provides the required jittering without requiring a large area on the regulator chip to implement a capacitor in a low frequency oscillator. Further, the invention minimizes effects caused by leakage current from transistors and capacitors associated with a low frequency oscillator. Thus, the jittering operation can be maintained even at high temperature which can increase current leakage.

Additionally, the invention reduces the need to add extra noise filtering components associated with the EMI filter. Therefore a compact and inexpensive power supply system can be built with minimal EMI emissions.

BRIEF DESCRIPTION OF THE DRAWINGS

FIG. **1** is a schematic diagram of a digital frequency jittering device.

FIG. **2** is a plot illustrating the operation of the device of FIG. **1**.

FIG. **3** is a schematic diagram of an analog frequency jittering device.

FIG. **4** is a schematic diagram of an implementation of the device of FIG. **3**.

FIG. **5** is a timing diagram illustrating the operation of the frequency jitter device of FIG. **4**.

FIG. **6** is a schematic diagram of a switched mode power supply in accordance with the present invention.

DESCRIPTION

FIG. **1** shows a digital frequency jittering circuit **100**. The digital frequency jittering circuit **100** has a primary oscillator **110** which provides a clock signal to a counter **140**. The primary oscillator **110** typically operates between 100 kHz and 130 kHz. The counter **140** can be a seven bit counter. Each output of counter **140**, when clocked by primary oscillator **110**, represents a particular time interval. The outputs of the counter **140** are provided to a series of frequency jittering current sources **150**. The outputs of the series of frequency jittering current sources **150** are presented to the primary oscillator **110** to vary its frequency, as will be described below.

Primary oscillator **110** contains a primary current source **122** which provides a primary current (denoted as I) to node **123**. Current **125** to the node **123** is provided to the source of MOSFET transistors **126** and **132**. The drain of MOSFET transistor **126** is connected to the drain of an n-channel MOSFET transistor **128**. The source of transistor **128** is grounded, while the gate of the transistor **128** is connected to its drain. The gate of the transistor **128** is also connected to the gate of an n-channel MOSFET transistor **130**. The source of the transistor **130** is grounded while the drain is connected to the drain of the MOSFET transistor **132** at a node **131**. Transistors **126**, **128**, **130** and **132** form a differential switch. The output of comparator **136** is connected to the gate of the transistor **132** and to an inverter **124**. The output of inverter **124** is connected to the gate of transistor **126**. The comparator **136** has an input which is connected to node **131** and to a capacitor **134**. In combination, the transistors **126**, **128**, **130** and **132**, capacitor **134**, inverter **124**, current source **122** and comparator **136** form an oscillator. The output of the comparator **136** is provided as an oscillator output OSC_OUT **101** and is also used to drive the clock input of counter **140**.

Counter **140** has a plurality of outputs Q**1**–Q**3** (not shown) which are not used. The remaining outputs Q**4**–Q**7** are connected to a digital-to-analog (D-to-A) converter **150**, which may be implemented as a series of frequency jittering voltage sources or current sources. A Q**4** output **155** is connected to the gate of a p-channel MOSFET transistor

154. A Q5 output 157 is connected to the gate of a p-channel MOSFET transistor 158. The Q6 output 163 is connected to the gate of a p-channel MOSFET transistor 162, and Q7 output 167 is connected to the gate of a p-channel MOSFET transistor 166. When D-to-A converter 150 is viewed as a plurality of current sources, the source of transistor 154 is connected to a jittering current source 152, which provides a current which is 1/200th of the current I generated by the current source 122. The source of MOSFET transistor 158 is connected to a current source 156 which provides a current that is 1/100th of the current I. The source of the MOSFET transistor 162 is connected to a jittering current source 160 which provides a current that is 1/50th of I. Finally, the source of the MOSFET transistor 166 is connected to a jittering current source 164 which provides a current that is 1/25th of the current I. The current sources 152, 156, 160 and 164 are binary-weighted, that is, the current source 164 provides twice the current provided by the current source 160, the current source 160 provides twice the current supplied by the current source 156 and the current source 156 provides twice the current provided by the current source 152.

Further, in one embodiment, the largest current source 164 may supply no more than 10% of the current I provided by the primary current source 122. The drain of transistors 154, 158, 162 and 166 are joined together such that the supplemental frequency jittering current sources of the D-to-A converter 150 can be provided to supplement the primary current source 122.

During operation, at every eight clock cycles, the counter output Q4 on line 155 changes state. Similarly, at every 16 clock cycles, the output Q5 on line 157 changes state and at every 32 clock cycles, the output Q6 on line 163 changes state, and every 64 clock cycles, the output Q7 on line 167 changes state. The entire counting cycle thereafter repeats itself.

Each time the output Q4 on line 155 is low, transistor 154 is turned on to inject current in the amount of I/200 to node 123 so that the total current 125 is 1.005I. Similarly, each time that the output Q5 on line 157 is low, transistor 158 is turned on to inject current in the amount of I/100 to node 123 so that the total current 125 is 1.01I. Further, each time that output Q6 on line 163 is low, transistor 162 is turned on to inject current in the amount of I/50 to node 123 so that the total current 125 is 1.02I. Finally, each time that the output Q7 on line 167 is low, the transistor 166 is turned on to inject current in the amount of I/25 to node 123 so that the total current 125 is 1.04I.

Additionally, when combinations of outputs Q4–Q7 are turned on, the outputs of the respective current sources 152, 156, 160 and 164 are added to the output of current source 122 to vary the frequency of the primary oscillator 110. In this manner, counter 140 drives a plurality of current sources to inject additional current to the main current source 122 such that the frequency of the primary oscillator 110 is varied.

The jittering operation of the embodiment of FIG. 1 is further illustrated in a chart in FIG. 2. A normalized operating frequency is plotted on the y-axis while the counting cycle as shown by the counter outputs Q4–Q7 is plotted on the x-axis. As shown in FIG. 2, as the counter counts upward to the maximum count of 128, the peak switching frequency is achieved. This peak switching frequency is normalized to be about 1.075 times the base switching frequency. Further, on average, the switching frequency is between 1.03 and 1.04 times the base switching frequency. Thus, the embodiment of FIG. 1 deviates the switching frequency of the oscillator within a narrow range. This deviation reduces EMI noise by spreading the energy over a wider frequency range than the bandwidth measured by the EMI test equipment such that the noise measured by the EMI test equipment is reduced considerably.

FIG. 3 shows an analog frequency jittering circuit. More details on the analog frequency jittering device are shown in co-pending U.S. application Ser. No. 09/080,774, entitled "OFFLINE CONVERTER WITH INTEGRATED SOFT START AND FREQUENCY JITTER," filed on May 18, 1998, the content of which is hereby incorporated by reference. In FIG. 3, the primary oscillator 110 provides an oscillator output on line OSC-OUT 101. An analog low frequency oscillator 405 is also provided. Primary oscillator 110 typically operates between a range of 30 to 300 kHz, while the low frequency oscillator 405 typically operates between a range of 5 Hz to 5 kHz. As discussed above, the switching frequency of the primary oscillator 110 is determined by the amount of current the primary oscillator uses to charge and discharge capacitor 134. The low frequency oscillator 405 varies this current within a narrow range to jitter the frequency of the primary oscillator 110.

The output of low frequency oscillator 405 is provided to a MOSFET transistor 505 connected to a resistor 510 and a current mirror including transistors 495 and 500. Transistor 500 is connected to node 123 so that extra current can be added to current source 122 feeding the primary oscillator. In this manner, the frequency of the primary oscillator 110 is shifted around a narrow range to reduce the EMI noise.

FIG. 4 shows a more detailed implementation of FIG. 3. As shown therein, main oscillator 465 has a current source 470 that is mirrored by current mirror transistors 472 and 475. Main oscillator drive current 615 is provided to current source input 485 of oscillator 480. The magnitude of the current input into current source input 485 determines the frequency of the oscillation signal 415 provided by oscillator 480. In order to vary the frequency of the oscillation signal 415, an additional current source 495 is provided within the main oscillator 465. The current source 495 is mirrored by current source mirror 500.

The current provided by current source 495 is varied as follows. Frequency variation signal 400 is provided to the gate of main oscillator transistor 505. As the magnitude of frequency variation signal 400 increases, so does the voltage at the source of main oscillator transistor 505 due to the increasing voltage at the gate of the transistor 505 and the relatively constant voltage drop between the gate and source of the transistor 505. As the voltage at the source of transistor 505 increases, so does the current 604 flowing through the resistor 510. The current flowing through the resistor 510 is the same as the current flowing through additional current source 500 which mirrors transistor 495.

Since the frequency variation signal 400 is a triangular waveform having a fixed period, as shown, the magnitude of the current input by additional current source mirror 500 will vary linearly with the magnitude of the rising and falling edges of the frequency variation signal 400. If the frequency variation signal 400 is a ramp signal, the frequency will linearly rise to a peak and then fall to its lowest value. In this way, the current 615 provided to current source input 485 of the oscillator 480 is varied in a known fixed range that allows for an easy and accurate frequency spread of the high frequency current. Further, the variance of the frequency is determined by the magnitude of the current provided by current source mirror 500, which is a function of the resistance of the resistor 510.

Frequency variation circuit **405** includes a current source **525** that produces a fixed magnitude current **530** that determines the magnitude of the frequency of the frequency variation signal **400**. Although the current **530** has a fixed magnitude, the frequency variation signal can be generated utilizing a variable magnitude current. If such variable current is generated, the frequency spread is not fixed in time but varies with the magnitude of current **530**. The fixed magnitude current **530** is fed into first transistor **535**, mirrored by second transistor **540** and third transistor **545**. The frequency variation signal **400** is generated by the charging and discharging of the capacitor **550**. Frequency variation circuit capacitor **550** has a relatively low capacitance, which allows for integration into a monolithic chip in one embodiment of low frequency oscillator **405**. The frequency variation signal **400** is provided to upper limit comparator **555** and lower limit comparator **560**. The output of upper limit comparator **555** will be high when the magnitude of the frequency variation signal **400** exceeds the upper threshold voltage on line **552** which is about 4.5 volts. The output of lower limit comparator **560** will be low when the magnitude of frequency variation signal **400** drops below lower threshold voltage on line **557** which is about 1.5 volts. The output of upper limit comparator **555** is provided to the frequency variation circuit inverter **565** the output of which is provided to the reset input of frequency variation circuit latch **570**. The set input of frequency variation circuit latch **570** receives the output of lower limit comparator **560**.

In operation, the output of lower limit comparator **560** will be maintained high for the majority of each cycle of frequency variation signal **400** because the magnitude of frequency variation signal will be maintained between the upper threshold on line **552**, 4.5 volts, and lower threshold on line **557**, 1.5 volts. The output of upper limit comparator **555** will be low until the magnitude of frequency variation signal **400** exceeds upper level threshold on line **552**. This means that the reset input will receive a high signal when the magnitude of the frequency variation signal **400** rises above the upper threshold signal on line **552**.

The charge signal **575** output by frequency variation circuit latch **570** will be high until the frequency variation signal **400** exceeds the upper threshold limit signal on line **552**. When the charge signal **575** is high, transistors **585** and **595** are turned off. By turning off transistors **585** and **595**, current can flow into the capacitor **550**, which steadily charges capacitor **550** and increases the magnitude of frequency variation signal **400**. The current that flows into the capacitor **550** is derived from current source **525** because the current through transistor **590** is mirrored from transistor **580**, which in turn is mirrored from transistor **535**.

During power up, when power-up signal **420** is low, the output of inverter **605** is high, which turns on transistor **600**, causing frequency variation signal **400** to go low. The frequency variation signal **400** starts from its lowest level to perform a soft start function during its first cycle of operation.

Referring to FIGS. **4** and **5**, FIG. **5** shows the operation of the analog frequency jittering device of FIG. **4**. In FIG. **5**, a frequency variation signal **405** is provided to the main oscillator **465**. The magnitude of the current **615** is approximately the magnitude of the frequency variation signal **405**, less the threshold voltage of transistor **505**, and divided by the resistance of the resistor **510** plus the magnitude of the current produced by the current source **475**. The current **615** varies with the magnitude of the frequency variation signal **405**. The variation of the current **615** in turn varies the frequency of the oscillator clock.

Referring now to FIG. **6**, a switched mode power supply is shown. Direct current (DC) input voltage is provided to a Zener diode **912** which is connected to a diode **914**. The diodes **912–914** together are connected in series across a primary winding of a transformer **920**. A secondary winding **922** is magnetically coupled to the primary winding of transformer **920**. One terminal of the secondary winding **922** is connected to a diode **930**, whose output is provided to a capacitor **932**. The junction between diode **930** and capacitor **932** is the positive terminal of the regulated output. The other terminal of capacitor **932** is connected to a second terminal of the secondary winding and is the negative terminal of the regulated output. A Zener diode **934** is connected to the positive terminal of the regulated output. The other end of Zener diode **934** is connected to a first end of a light emitting diode in an opto-isolator **944**. A second end of the light-emitting diode is connected to the negative terminal of the regulated output. A resistor **936** is connected between the negative terminal of the regulated output and the first end of the light-emitting diode of opto-isolator **944**. The collector of the opto-isolator **944** is connected to current source **172**. The output of current source **172** is provided to the switching regulator logic **800**.

Connected to the second primary winding terminal is the power transistor **208**. Power transistor **208** is driven by the switching regulator logic **800**. Switching regulator logic **800** receives a clock signal **101** from an oscillator **111**. A counter **140** also receives the clock signal **101** from the primary oscillator **111**. The outputs of counter **140** are provided to D-to-A converter **150**, which is connected to oscillator **111** for jittering the oscillation frequency. Alternatively, in lieu of counter **140** and a D-to-A converter **150**, an analog low frequency jittering oscillator may be used.

The foregoing disclosure and description of the invention are illustrative and explanatory thereof, and various changes in the size, shape, materials, components, circuit elements, wiring connections and contacts, as well as in the details of the illustrated circuitry and construction and method of operation may be made without departing from the spirit of the invention.

What is claimed is:

1. A digital frequency jittering circuit for varying the switching frequency of a power supply, comprising:

an oscillator for generating a signal having a switching frequency, the oscillator having a control input for varying the switching frequency;

a digital to analog converter coupled to the control input for varying the switching frequency; and

a counter coupled to the output of the oscillator and to the digital to analog converter, the counter causing the digital to analog converter to adjust the control input and to vary the switching frequency.

2. The circuit of claim **1**, wherein the oscillator further comprises a primary current source coupled to the oscillator control input.

3. The circuit of claim **2**, further comprising a differential switch, including:

first and second transistors coupled to the primary current source;

a third transistor coupled to the first transistor; and

a fourth transistor coupled to the second transistor at a junction.

4. The circuit of claim **3**, further comprising a capacitor coupled to the junction.

5. The circuit of claim **3**, further comprising one or more comparators coupled to the junction.

6. The circuit of claim 2, wherein the digital to analog converter has one or more secondary current sources.

7. The circuit of claim 6, further comprising a transistor coupled between each secondary current source and the counter.

8. The circuit of claim 6, wherein the primary current source generates a current I and each of the secondary current sources generates a current lower than I.

9. The circuit of claim 8, wherein the secondary current sources generate binary weighted currents.

10. The circuit of claim 8, wherein the largest secondary current source generates a current which is less than about 0.1 of I.

11. A method for generating a switching frequency in a power conversion system, comprising:

generating a primary current;

cycling one or more secondary current sources to generate a secondary current which varies over time; and

combining the secondary current with the primary current to be received at a control input of an oscillator for generating a switching frequency which is varied over time.

12. The method of claim 11 further comprising the step of clocking a counter with the output of the oscillator.

13. The method of claim 11 wherein the primary current is generated by a current source.

14. The method of claim 11 wherein the primary current is I and each of the secondary current sources generates a supplemental current lower than I, and further comprising passing the supplemental current to the oscillator control input.

15. The method of claim 14 further comprising binary-weighting the supplemental current.

16. The method of claim 14 wherein the largest supplemental current is less than approximately 0.1 of I.

17. A method for generating a switching frequency in a power conversion system, comprising:

generating a primary voltage;

cycling one or more secondary voltage sources to generate a secondary voltage which varies over time; and

combining the secondary voltage with the primary voltage to be received at a control input of a voltage-controlled oscillator for generating a switching frequency which is varied over time.

18. The method of claim 17 further comprising clocking a counter with the output of the oscillator.

19. The method of claim 17 wherein the primary voltage is V and each of the secondary voltage sources generates a supplemental voltage lower than V, further comprising passing the supplemental voltage to the voltage-controlled oscillator.

20. The method of claim 19, wherein the supplemental voltage is binary-weighted.

21. A frequency jittering circuit for varying a power supply switching frequency, comprising:

an oscillator for generating a signal having a switching frequency, the oscillator having a control input for varying the switching frequency; and

means coupled to the control input for varying the switching frequency, including:

one or more current sources coupled to the control input; and

a counter coupled to the output of the oscillator and to the one or more current sources.

22. The circuit of claim 21 wherein the oscillator further comprises:

a primary current source coupled to the control input; and

a differential switch coupled to the primary source.

23. The circuit of claim 22 wherein the oscillator further comprises:

first and second transistors coupled to the primary current source;

a third transistor coupled to the first transistor; and

a fourth transistor coupled to the second transistor at a junction.

24. The circuit of claim 22 further comprising a capacitor and a comparator coupled to the junction.

25. The circuit of claim 22 wherein the primary current source generates a current I and each of said one or more current sources generates a current lower than I.

26. The circuit of claim 22 wherein the primary current source generates a current I and each of said one or more current sources generates a second current lower than the current I, further comprising a transistor coupled to each current source connected to the counter.

27. The circuit of claim 21 further comprising a transistor coupled to each current source and to the counter.

28. The circuit of claim 21 wherein the oscillator further comprises:

a primary voltage source coupled to the control input; and

a differential switch coupled to the primary voltage source.

29. The circuit of claim 21 wherein the means for varying the frequency further comprises:

a capacitor; and

a current source adapted to charge and discharge the capacitor.

30. The circuit of claim 29 further comprising:

one or more comparators coupled to the capacitor; and

means coupled to the capacitor for alternatingly charging and discharging the capacitor.

31. A power supply having a transformer coupled to an input voltage, the transformer having a primary winding, the power supply comprising:

an oscillator for generating a signal having a frequency, the oscillator having a control input for varying the frequency of the signal, the oscillator including:

a primary current source coupled to the control input;

a differential switch coupled to the primary current source;

a capacitor coupled to the differential switch; and

a comparator coupled to the differential switch;

a digital to analog converter coupled to the control input, the digital to analog converter having one or more current sources, wherein the primary current source generates a current I and each of said one or more current sources generates a current lower that I;

a counter coupled to the output of the oscillator and to the current sources of the digital to analog converter; and

a power transistor coupled to the oscillator and to one terminal of the primary winding, the power transistor modulating its output in providing a regulated power supply output.

32. A power supply having a transformer coupled to an input voltage, the transformer having a primary winding, the power supply comprising:

an oscillator for generating a signal having a frequency, the oscillator having a control input for varying the frequency of the signal, the oscillator including:

a primary current source coupled to the control input;

a differential switch coupled to the primary current source;

a capacitor coupled to the differential switch; and

a comparator coupled to the differential switch

a circuit for varying the frequency, the circuit coupled to the control input, including:

a capacitor;

a current source adapted to charge and discharge the capacitor;

one or more comparators coupled to the capacitor and coupled to the current source for alternatingly charging and discharging the capacitor; and

a power transistor coupled to the oscillator and to one terminal of the primary winding, the power transistor modulating its output in providing a regulated power supply output.

* * * * *

IN THE UNITED STATES DISTRICT COURT
FOR THE DISTRICT OF DELAWARE

POWER INTEGRATIONS, INC., a Delaware corporation, Plaintiff, v. BCD SEMICONDUCTOR CORPORATION, a California corporation, and SHANGHAI SIM-BCD SEMICONDUCTOR MANUFACTURING CO., LTD., a China corporation, Defendants.	C.A. No. 07-633 JJF-LPS **JURY TRIAL REQUESTED**

~~FIRST~~SECOND AMENDED COMPLAINT FOR PATENT INFRINGEMENT

Plaintiff Power Integrations, Inc. hereby alleges as follows:

THE PARTIES

1. Power Integrations, Inc. ("Power Integrations") is incorporated under the laws of the state of Delaware, and has a regular and established place of business at 5245 Hellyer Avenue, San Jose, California, 95138.

2. Upon information and belief, defendant BCD Semiconductor Corporation is incorporated under the laws of the state of California, and has a regular and established place of business at 30920 Huntswood Avenue, Suite D, Hayward, California, 94544.

3. Upon information and belief, defendant Shanghai SIM-BCD Semiconductor Manufacturing Co., Ltd. is incorporated under the laws of the People's Republic of China, with its headquarters located at 800 Yishan Road, Shanghai 200233, China.

4. Defendant BCD Semiconductor Corporation and defendant Shanghai SIM-BCD Semiconductor Manufacturing Co., Ltd. will hereinafter be collectively referred to as the "Defendants."

JURISDICTION AND VENUE

5. This action arises under the patent laws of the United States, Title 35 U.S.C. § 1 *et seq*. This Court has subject matter jurisdiction under 28 U.S.C. §§ 1331 and 1338(a).

6. Upon information and belief, this Court has personal jurisdiction over Defendants because Defendants have purposely availed themselves of the privilege of conducting activities within this State and District.

7. Upon information and belief, venue is proper in this Court pursuant to 28 U.S.C. §§ 1391(b), 1391(c), and 1400 because Defendants are subject to personal jurisdiction in this judicial District.

GENERAL ALLEGATIONS

8. Power Integrations' products include its TOPSwitch®, TinySwitch®, LinkSwitch®, and DPA-Switch® families of power conversion integrated circuit devices which are used in power supplies for electronic devices such as cellular telephones, LCD monitors, and computers. These products are sold throughout the United States, including Delaware.

9. Upon information and belief, Defendants manufacture pulse width modulation ("PWM") controller integrated circuits devices (e.g., devices intended for use in power conversion applications such as off-line power supplies or battery chargers for portable electronics), and directly and through their affiliates, import, sell, and offer to sell the same throughout the United States, including Delaware.

FIRST CAUSE OF ACTION

INFRINGEMENT OF U.S. PATENT NO. 6,107,851

10. The allegations of paragraphs 1-9 are incorporated as though fully set forth herein.

11. Power Integrations is now, and has been since its issuance, the assignee and sole owner of all right, title, and interest in United States Patent No. 6,107,851,

entitled "Offline Converter with Integrated Softstart and Frequency Jitter" ("the '851 patent"), which was duly and legally issued on August 22, 2000. A true and correct copy of the '851 patent is attached hereto as Exhibit A.

12. Upon information and belief, Defendants have been and are now infringing, inducing infringement, and contributing to the infringement of the '851 patent in this District and elsewhere by making, using, selling, offering to sell, and/or importing devices, including PWM integrated circuit devices, covered by one or more claims of the '851 patent, and/or contributing to or inducing the same by third-parties, all to the injury of Power Integrations.

13. Defendants' acts of infringement have injured and damaged Power Integrations.

14. Defendants' infringement has caused irreparable injury to Power Integrations and will continue to cause irreparable injury until Defendants are enjoined from further infringement by this Court.

15. Upon information and belief, Defendants' infringement has been, and continues to be, willful so as to warrant the enhancement of damages awarded as a result of their infringement.

SECOND CAUSE OF ACTION

INFRINGEMENT OF U.S. PATENT NO. 6,249,876

~~15.~~16. The allegations of paragraphs 1-9 are incorporated as though fully set forth herein.

~~16.~~17. Power Integrations is now, and has been since its issuance, the assignee and sole owner of all right, title, and interest in United States Patent No. 6,249,876, entitled "Frequency Jittering Control for Varying the Switching Frequency of a Power Supply" ("the '876 patent"), which was duly and legally issued on June 19, 2001. A true and correct copy of the '876 patent is attached hereto as Exhibit B.

~~17.~~18. Upon information and belief, Defendants have been and are now infringing, inducing infringement, and contributing to the infringement of the '876 patent in this District and elsewhere by making, using, selling, offering to sell, and/or importing devices, including PWM integrated circuit devices, covered by one or more claims of the '876 patent, and/or contributing to or inducing the same by third-parties, all to the injury of Power Integrations.

~~18.~~19. Defendants' acts of infringement have injured and damaged Power Integrations.

~~19.~~20. Defendants' infringement has caused irreparable injury to Power Integrations and will continue to cause irreparable injury until Defendants are enjoined from further infringement by this Court.

21. Upon information and belief, Defendants' infringement has been, and continues to be, willful so as to warrant the enhancement of damages awarded as a result of their infringement.

PRAYER FOR RELIEF

WHEREFORE, Plaintiff requests the following relief:

(a) judgment against Defendants as to infringement of the '851 patent;

(b) judgment against Defendants as to infringement of the '876 patent;

(c) a permanent injunction preventing Defendants and their officers, directors, agents, servants, employees, attorneys, licensees, successors, assigns, and customers, and those in active concert or participation with any of them, from making, using, importing, offering to sell or selling any devices that infringe any claim of the '851 or '876 patents;

(d) judgment against Defendants for money damages sustained as a result of Defendants' infringement of the '851 and '876 patents in an amount to be determined at trial;

(e) that any such money judgment be trebled as a result of the willful nature of Defendants' infringement;

(f) an accounting for infringing sales not presented at trial and an award by the court of additional damages for any such infringing sales;

(~~f~~g) costs and reasonable attorneys' fees incurred in connection with this action pursuant to 35 U.S.C § 285; and

(~~g~~h) such other and further relief as this Court finds just and proper.

JURY DEMAND

Plaintiff requests trial by jury.

Dated: ~~March 13~~April 28, 2008 FISH & RICHARDSON P.C.

By: _____

William J. Marsden, Jr. (#2247)
Kyle Wagner Compton (#4693)
919 N. Market Street, Suite 1100
P.O. Box 1114
Wilmington, DE 19801
Telephone: (302) 652-5070
Facsimile: (302) 652-0607
Marsden@fr.com

Frank E. Scherkenbach
225 Franklin Street
Boston, MA 02110-2804
Telephone: (617) 542-5070
Facsimile: (617) 542-8906

Howard G. Pollack
Michael R. Headley
500 Arguello Street, Suite 500
Redwood City, CA 94063
Telephone: (650) 839-5070
Facsimile: (650) 839-5071

Attorneys for Plaintiff
POWER INTEGRATIONS, INC.