IN THE UNITED STATES DISTRICT COURT
FOR THE DISTRICT OF DELAWARE

POWER INTEGRATIONS, INC., Plaintiff, v. BCD SEMICONDUCTOR CORPORATION and SHANGHAI SIM-BCD SEMICONDUCTOR MANUFACTURING CO., LTD., Defendants.	)	C.A. No. 07-633-JJF-LPS **REDACTED PUBLIC VERSION**

DEFENDANTS' ANSWERING BRIEF IN OPPOSITION TO PLAINTIFF POWER INTEGRATIONS' MOTION FOR ENTRY OF PRELIMINARY INJUNCTION

Of Counsel:

E. Robert Yoches
FINNEGAN, HENDERSON, FARABOW, GARRETT & DUNNER, L.L.P.
901 New York Avenue, NW
Washington, DC 20001
(202) 408-4000

Robert L. Burns
FINNEGAN, HENDERSON, FARABOW, GARRETT & DUNNER, L.L.P.
11955 Freedom Drive
Reston, VA 20190
(571) 203-2700

Erik R. Puknys
FINNEGAN, HENDERSON, FARABOW, GARRETT & DUNNER, L.L.P.
3300 Hillview Avenue
Palo Alto, CA 94304
(650) 849-6600

ASHBY & GEDDES
Steven J. Balick (I.D. #2114)
John G. Day (I.D. #2403)
Tiffany Geyer Lydon (I.D. #3950)
500 Delaware Avenue, 8th Floor
P.O. Box 1150
Wilmington, Delaware 19899
(302) 654-1888
sbalick@ashby-geddes.com
jday@ashby-geddes.com
tlydon@ashby-geddes.com

Attorneys for Defendants BCD Semiconductor Corporation and Shanghai SIM-BCD Semiconductor Manufacturing, Co., LTD.

Dated: April 7, 2008

Table of Contents

Table of Contents i

Table of Authorities iii

I. INTRODUCTION 1

II. STATEMENT OF FACTS 2

A. Status of Proceedings 2

B. The Parties 2

C. The Asserted Patent—U.S. Patent No. 6,249,876 4

1. Background of the '876 Patent 4

2. Disclosure of the '876 Patent 5

3. Claim 1 of the '876 Patent 8

D. PI's Lawsuit Against Fairchild 9

E. The PTO's Decision to Reexamine the Asserted Patent 9

F. Additional Prior Art 12

G. The Accused Product 12

H. PI's First Lawsuit Against BCD 13

I. Accused Acts of Infringement 14

III. ARGUMENT 16

A. PI Has No Reasonable Likelihood of Success on the Merits 16

1. PI Cannot Demonstrate Infringement of Claim 1 of the '876 Patent 16

2. BCD Has a Substantial Defense that Claim 1 of the '876 Patent Is Invalid 22

B. PI Will Suffer No Irreparable Harm if the Court Does Not Grant a Preliminary Injunction 25

1. PI Makes No Showing of Irreparable Harm Caused by Any Infringing Activity of BCD 25

2. PI's Undue Delay in Seeking an Injunction Demonstrates the Absence of Irreparable Harm 27

3. Money Damages Are Sufficient to Compensate for Any Loss that May Exist in the Absence of an Injunction 28

C. The Balance of Hardships Weighs In Favor of BCD 29

D. Granting the Preliminary Injunction Power Integrations Seeks Would Violate Fundamental Notions of Sovereignty 30

IV. CONCLUSION 32

Table of Authorities

Cases

Abbott Labs. v. Andrx Pharms., Inc.,
452 F.3d 1331 (Fed. Cir. 2006) 22

Al-Site Corp. v. VSI Int'l, Inc.,
174 F.3d 1308 (Fed. Cir. 1999) 17

Amazon.com, Inc. v. Barnesandnoble.com, Inc.,
239 F.3d 1343 (Fed. Cir. 2001) 19, 25

Atlas Powder Co. v. Ireco Chemicals,
773 F.2d 1230 (Fed. Cir. 1985) 22

Biodex Corp. v. Loredan Biomedical, Inc.,
946 F.2d 850 (Fed. Cir. 1991) 17

Chiuminatta Concrete Concepts, Inc. v. Cardinal Indus., Inc.,
145 F.3d 1303 (Fed. Cir. 1998) 17

Cordis Corp. v. Medtronic, Inc.,
780 F.2d 991 (Fed. Cir. 1985) 16

Deepsouth Packing Co. v. Laitram Corp.,
406 U.S. 518 (1972) 31

Dowagiac Mfg. Co. v. Minn. Moline Plow Co.,
235 U.S. 641 (1915) 26

DSU Med. Corp. v. JMS Co., Ltd.,
471 F.3d 1293 (Fed. Cir. 2006) 26

DUSA Pharms., Inc. v. River's Edge Pharms., LLC,
2007 WL 748448 (D.N.J. Mar. 7, 2007) 23

eBay, Inc. v. MercExchange, L.L.C.,
547 U.S. 388 (2006) 25

Entegris, Inc. v. Pall Corp.,
490 F.3d 1340 (Fed. Cir. 2007) 22

Greenberg v. Ethicon Endo-Surgery, Inc.,
91 F.3d 1580 (Fed. Cir. 1996) 17

Hewlett-Packard Co. v. Bausch & Lomb Inc.,
909 F.2d 1464 (Fed. Cir. 1990) 26

High Tech Med. Instrumentation, Inc. v. New Image Indus., Inc.,
49 F.3d 1551 (Fed. Cir. 1995) 27

Kyphon, Inc. v. Disc-O-Tech Med. Techs.,
No. 04-204,
2004 WL 2898064 (D. Del. Dec. 10, 2004) 25

Laitram Corp. v. Rexnord, Inc.,
939 F.2d 1533 (Fed. Cir. 1991) 19

Micro Chem., Inc. v. Great Plains Chem. Co.,
194 F.3d 1250 (Fed. Cir. 1999) 17

Microsoft v. AT&T Corp.,
127 S. Ct. 1746 (2007) 30, 31

Nat'l Steel Car, Ltd. v. Canadian Pac. Ry., Ltd.,
357 F.3d 1319 (Fed. Cir. 2004) 16

Pergo, Inc. v. Faus Group, Inc.,
401 F. Supp. 2d 515 (E.D.N.C. 2005) 23

Rodime PLC v. Seagate Tech., Inc.,
174 F.3d 1294 (Fed. Cir 1999) 17

State of New Hampshire v. Maine,
532 U.S. 742 (2001) 20

Sun Optics, Inc. v. FGX Int'l, Inc.,
Civ. No. 07-137,
2007 WL 2228569 (D. Del. Aug. 2, 2007) 25

Torspo Hockey Int'l, Inc. v. Kor Hockey Ltd.,
491 F. Supp. 2d 871 (D. Minn. 2007) 25

Voda v. Cordis Corp.,
476 F.3d 887 (Fed. Cir. 2007) 26, 30

Watts v. XL Sys., Inc.,
232 F.3d 877 (Fed. Cir. 2000) 17

Weinberger v. Romero-Barcelo,
456 U.S. 305 (1982) 30

Yamashita v. Wilbur-Ellis Co.,
2006 WL 1320470 (N.D. Cal. May 15, 2006) 29

Statutes

35 U.S.C. § 102 24

35 U.S.C. § 103 24

35 U.S.C. § 271(a) 26

35 U.S.C. § 271(c) 26

35 U.S.C. § 283 ..... 16, 25

35 U.S.C. §112, ¶ 6 ..... 17, 18

I. INTRODUCTION

It is clear from reading the opening brief of Power Integrations, Inc. ("PI") that this case is not about anything that Defendants Shanghai SIM-BCD Semiconductor Manufacturing Co., Ltd. ("SIM-BCD") and BCD Semiconductor Corporation ("BCD California") (collectively, "BCD" or "Defendants") do in the United States. Instead, PI has filed this case to win back the business of a single customer, Samsung, a Korean cell-phone manufacturer that sells cell phones around the world. PI seeks to enjoin SIM-BCD from competing with it in Korea and around the world. But the United States' patent laws are not meant to stifle competition, much less competition on foreign soil. PI has no basis to ask for the relief it seeks from this Court.

This would be true regardless of whether BCD's accused products possess every limitation of the claim PI asserts here. As will be shown below, however, PI's infringement theory is based on a misreading of the claim language and ignores the differences between the technology in the asserted patent and in BCD's accused products. In addition, PI's infringement theory in this case contradicts positions PI took in its prior litigation against Fairchild, since the accused product shares at least two features with the prior art that PI's expert, Mr. Blauschild, expressly concluded were outside the asserted claims.

Moreover, a patentee is not entitled to an injunction where the defendant can show there is a substantial question concerning the validity of the patent-in-suit. Here, the United States Patent and Trademark Office ("PTO") has instituted a reexamination proceeding to determine whether the patents-in-suit even should have issued in the first place because the PTO determined that there are substantial new questions concerning the patentability of PI's asserted claim. As explained in more detail below, the PTO's initial conclusion is correct and the asserted claim is invalid in view of the prior art.

Finally, PI's public announcements of its recent marketplace success and its more than seven-month delay in seeking a preliminary injunction belie the claims it makes to this Court of irreparable and substantial harm absent a preliminary injunction preventing BCD from competing with PI in overseas markets.

Any one of these reasons is sufficient to reject PI's attempt to preliminary enjoin BCD. Accordingly, the Court should deny PI's motion.

II. STATEMENT OF FACTS

A. Status of Proceedings

PI originally sued Defendants on June 14, 2007, in the Northern District of California. (*See* Ex. A ("Cal. Docket Report"), at D.I. 1.) On October 15, 2007, two days before the initial Case Management Conference, PI dismissed the California lawsuit. (*See id.* at D.I. 17, 18.) That same day, PI filed this complaint against BCD in this Court based on the same allegations and patents in its original California complaint. (*See* D.I. 1, Compl.) On January 25, 2008, more than seven months after filing its original complaint,[1] PI moved for a preliminary injunction. (*See* D.I. 12, Mot. for Prelim. Inj.)

B. The Parties

PI is a provider of power supply integrated circuits ("ICs") that convert electricity from a power source, such as a wall electrical outlet, into the power needed for an electronic device, such as a cell phone. (Ex. B, PI's Form 10-K for FY ending on Dec. 31, 2007 ("PI's 2007 Form 10-K"), at 3.) Although the power IC market is highly competitive (*id.* at 15), PI attempts to distinguish itself by providing "highly integrated" power ICs, as opposed to "discrete

[1] On March 13, 2008, Power Integrations withdrew one of the three patents from the case by filing an amended complaint. (*See* D.I. 50, First Am. Compl.)

components such as PWM controllers . . . , which are produced by a large number of vendors." (*Id.* at 3-4.) PI's "patented ICs integrate onto a single chip many of the functions otherwise performed by numerous discrete electronic components." (*Id.* at 4.) According to PI, advantages of this "highly integrated" design over designs using discrete components include "fewer components, reduced size, enhanced functionality and lower cost." (*Id.* at 5; *see also* Ex. C, ("PI Investor Presentation") at 12-13.)

Even though PI is located in California, about 95% of its net revenues come from "[s]ales to customers outside of the Americas." (PI's 2007 Form 10-K, at 19.)

REDACTED

Notwithstanding its heavy reliance on foreign sales and lack of foreign intellectual property protection, PI has been very successful recently. For instance, contrary to PI's claims of irreparable harm by BCD (*see* D.I. 13, PI's Opening Br. in Supp. of Mot. for Prelim. Inj., at 12 ("PI Br.")), PI has told its investors that "2007 was an excellent year . . . with 18 percent revenue growth." (Ex. E ("PI 4Q Press Release"), at 1.) Indeed, although PI claims its recent loss of Samsung's business has had a "dramatic impact" (PI Br. 13), PI boasted that 2007 "ended on an especially high note with 28 percent year-over-year revenue growth in the fourth quarter." (PI 4Q Press Release, at 1.) PI further explained that its success was not limited to any particular market, but rather "[t]his growth was broad-based, with revenues from each of our major end markets growing more than 20 percent." (*Id.* at 1.)

SIM-BCD, headquartered in Shanghai, China, is a subsidiary of BCD Semiconductor Manufacturing Ltd. ("BCD Semiconductor"), a China-based company. (D.I. 11, Ex. 1, Decl. of

Tung-Yi Chan ("T. Chan. Decl.") ¶¶ 3-4.)

REDACTED

REDACTED

C. The Asserted Patent—U.S. Patent No. 6,249,876

1. Background of the '876 Patent

Power electronic circuits are circuits used to change the characteristics (voltage, current, and/or frequency) of electric power. (*See* Decl. of Thomas Habetler ("Habetler Decl.," filed contemporaneously herewith) ¶ 5.) To perform this conversion efficiently, those circuits use semiconductor switches and reactive (i.e., energy storage) elements. (*Id.*) These circuits use a high switching frequency to reduce size and increase power density. (*Id.*) As technology has progressed over the last 20 years, the switching frequency has gotten higher with better and more ideal semiconductor switches. (*Id.*) This high-speed switching of relatively high current and voltage causes emitted electromagnetic waves, referred to as "electromagnetic interference" ("EMI"). (*Id.*)

This EMI can interfere with other electronic equipment and signals in proximity to the source, and is therefore undesirable, and is regulated by government agencies, and subject to industry standards. (*Id.* at ¶ 6.) Since it is necessary to operate the semiconductor switches at a certain frequency, the EMI is concentrated at or near that frequency. (*Id.*)

Numerous techniques have been used in the past in order to reduce EMI, including the use of "randomized" or "pseudo-random" switching or "dithering."[2] (*Id.* at ¶¶ 6-9) This technique involves randomly changing the switching frequency to spread interference among several different frequencies so that the interference at any one frequency is reduced. *Id.* According to PI's expert, Robert Blauschild, the '876 patent describes a "simple and elegant solution for reducing EMI" that is "the exact opposite" of pseudo-random techniques. (Habetler Decl., Ex. 9, Suppl. Rebuttal Expert Report of Robert Blauschild ("Blauschild Suppl. Rep.") ¶¶ 25, 29, 50, 52 (Feb. 17, 2007).).

2. Disclosure of the '876 Patent

The '876 patent involves reducing EMI by varying the switching frequency in a non-random, ramped fashion. Figure 1 of the '876 patent shows a circuit for doing so.

[2] A truly "random" technique is impractical, and thus designers generally use "pseudo-random" techniques instead. A pseudo-random technique approximates a random technique by using a relatively small set of random numbers. (Habetler Decl. ¶ 27 n.1.)

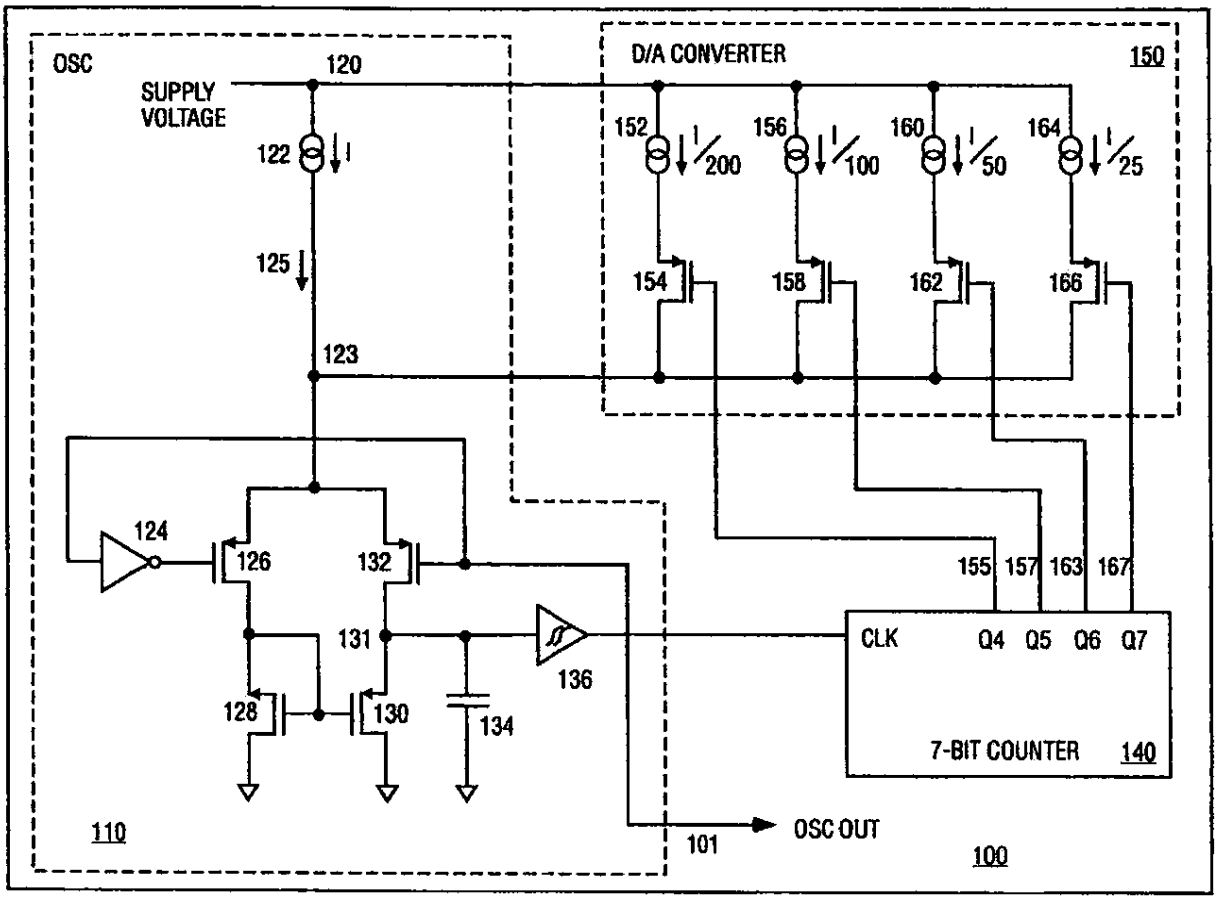

FIG. 1

Frequency "jittering"[3] circuit 100 has three principal elements: a primary oscillator (shown within the dotted line on the left side of the figure as 110), a 7-bit counter (140) and a D/A converter (150). The primary purpose of the oscillator is to provide a clock signal (labeled "OSC OUT") that determines the switching frequency for a switched-mode power supply, which is a power supply that periodically switches current through a transformer[4] at a high frequency.

[3] PI generally uses the term "jittering" to refer to dithering.

[4] A "transformer," which has two or more coupled windings of wire, is "a device to transfer power by electromagnetic induction between circuits at the same frequency, usually with changed values of voltage and current." (Habetler Decl., Ex. 13, IEEE Standard Dictionary for Electrical and Electronics Terms ("IEEE Dictionary"), at 958 (3d ed. 1984).)

('876 Patent, Abstract.). The frequency of the clock signal (and thus the switching frequency) varies as a function of the magnitude of the current into the oscillator. (*Id.* at col. 5:49-56.)

The oscillator also provides the same clock signal to counter 140. (*Id.* col. 4:28-32.) The counter has four outputs (Q4, Q5, Q6, and Q7) connected to the D/A converter (150). (*Id.* col. 4:62-col.5:5.) Each of the four counter outputs is connected to a switch that controls one of four "current sources" (154, 158, 162, 166), each one having a different current magnitude. (*Id.*) The counter responds to the clock signal by turning the different switches on and off so the D/A converter sends to node 123 a current that increases from zero to a maximum value in a step-wise fashion. (*Id.* col. 5:29-66; col. 6:17-22.) The current from the D/A converter is then added to the "primary" current (provided by primary current source 122) by node 123 to create another current that controls the frequency of the oscillator by controlling the charging rate of capacitor 134. (*Id.*) The greater the current, the greater the charging rate, and the greater the frequency. The frequency variation is shown below in Figure 2.

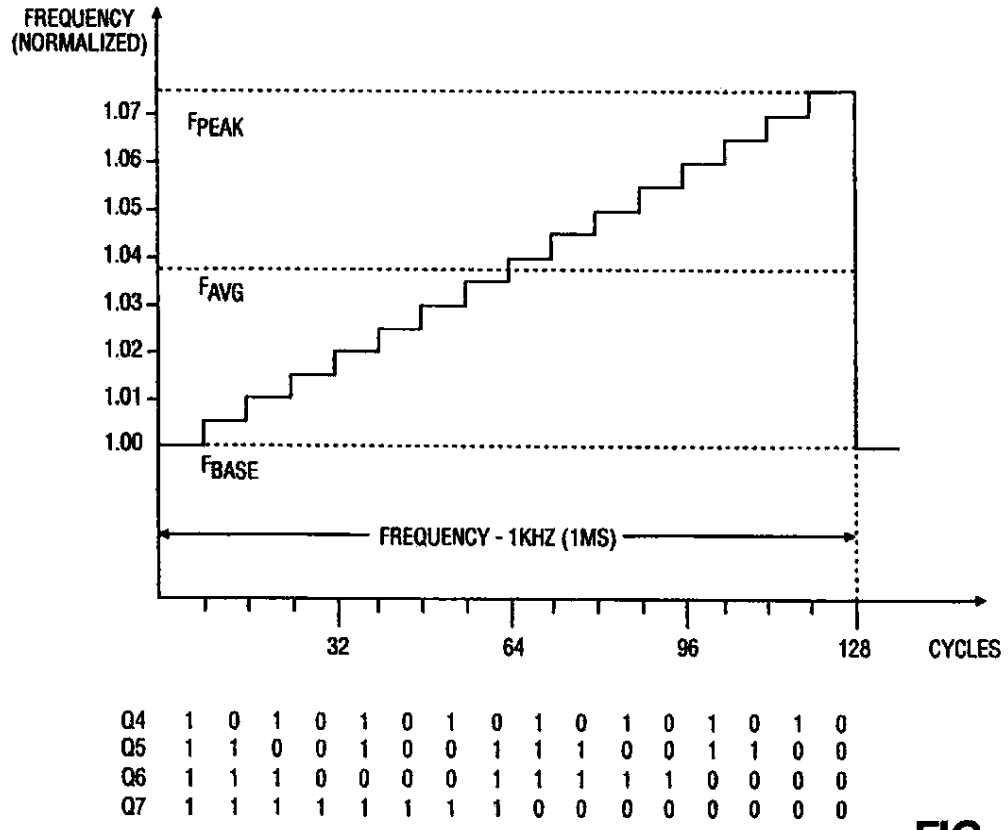

FIG. 2

(*Id.* Fig. 2.)

3. Claim 1 of the '876 Patent

The only claim in issue, claim 1 of the '876 patent, reads as follows:

> 1. A digital frequency jittering circuit for varying the switching frequency of a power supply, comprising:
>
> an oscillator for generating a signal having a switching frequency, the oscillator having a control input for varying the switching frequency;
>
> a digital to analog converter coupled to the control input for varying the switching frequency; and
>
> a counter coupled to the output of the oscillator and to the digital to analog converter, the counter causing the digital to analog converter to adjust the control input and to vary the switching frequency.

'876 Patent, col. 8:43-53.

D. PI's Lawsuit Against Fairchild

In October 2004, PI asserted the two patents in this case against Fairchild Semiconductor. (Ex. I, PI's First Am. Compl. Against Fairchild ("*Fairchild* Compl."), at 2-4.) In that case, PI did not seek a preliminary injunction (*see* Ex. J ("*Fairchild* Docket Report")), perhaps because of this Court's decision to deny such a request in a similar prior case against Motorola Inc.[5] Although PI has obtained a jury verdict that Fairchild did not prove that the '876 patent was invalid (*see* Ex. M, Special Verdict Form (Sept. 21, 2007)), Fairchild has filed a post-trial JMOL motion on the ground that the jury's verdict is not supported by substantial evidence. (*See Fairchild* Docket Report, at D.I. 614.) Fairchild has also filed post-trial motions on the issue of damages, arguing for example, that Fairchild's sales to foreign customers cannot, as a matter of law, support PI's claims of induced infringement or its claim for damages. (*See id.* at D.I. 613.) The Court has not yet decided these motions.

E. The PTO's Decision to Reexamine the Asserted Patent

On November 9, 2006, Fairchild requested reexamination of claims 1 and 17-19 of the '876 patent. (*See* Ex. N, Order Granting *Ex Parte* Reexamination ("Reexam Order"), at 2 (Dec. 21, 2006).) Fairchild cited three references that the PTO had not considered previously:

> 1. Martin, Jr. et al., U.S. Patent No. 4,638,417 ("Martin") (Habetler Decl., Ex. 11).
>
> 2. Thomas G. Habetler & Deepakraj M. Divan, *Acoustic Noise Reduction in Sinusoidal PWM Drives Using a Randomly Modulated Carrier*, 6 IEEE

[5] Specifically, in *Power Integrations, Inc. v. Motorola Inc.*, Civ. No. 98-490 (D. Del.) (Farnan, J.), PI moved for a preliminary injunction, making similar arguments to the ones it makes here. (*See* Ex. K ("*Motorola* Mem. Order"), at 4.) This Court denied that motion, finding PI's claim of irreparable harm undermined by a delay of more than six months between filing suit and filing its motion for preliminary injunction. (*See Motorola* Mem. Order, at 4; Ex. L ("*Motorola* Docket Report") (showing that PI filed suit on August 19, 1998, but waited until February 26, 1999, to file its motion).)

Transactions on Power Electronics 356 (July 1991) ("Habetler") (Habetler Decl., Ex. 8).

3. Andrew C. Wang & Seth R. Saunders, *Programmed Pulsewidth Modulated Waveforms for Electromagnetic Interference Mitigation in DC-DC Converters*, 8 IEEE Transactions on Power Electronics 596 (Oct. 1993) ("Wang") (Habetler Decl., Ex. 12).

Fairchild asserted that each reference anticipates and renders obvious claim 1 of the '876 patent. (Ex. N, Reexam Order, at 3.) Like claim 1 of the '876 patent, each of these three references includes an oscillator for generating a signal having a switching frequency and a counter that causes a digital to analog converter to adjust the input to the oscillator and thus vary the switching frequency.

For example, Martin discloses the following "circuit which reduces electromagnetic interference (EMI) by frequency modulation of power converters" (Martin, col. 1:66-68):

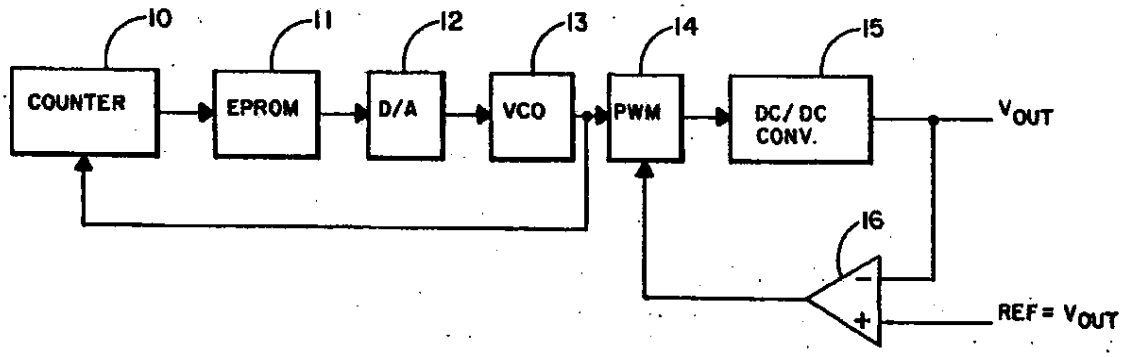

(Martin, Fig.) Similar to claim 1 of the '876 patent, the output of a "voltage controlled oscillator" ("VCO") 13 drives counter 10. (*Id.* col. 2:20-22.) Counter 10 then sends a signal to a circuit (EPROM 11) that converts the counter's signal into a pseudo-random code, which D/A converter 12 then converts into an analog signal to cause VCO 13 to generate a varying-frequency clock signal that reduces EMI. (*Id.* col. 2:22-54.)

Habetler discloses the following spread-spectrum circuit for reducing noise:

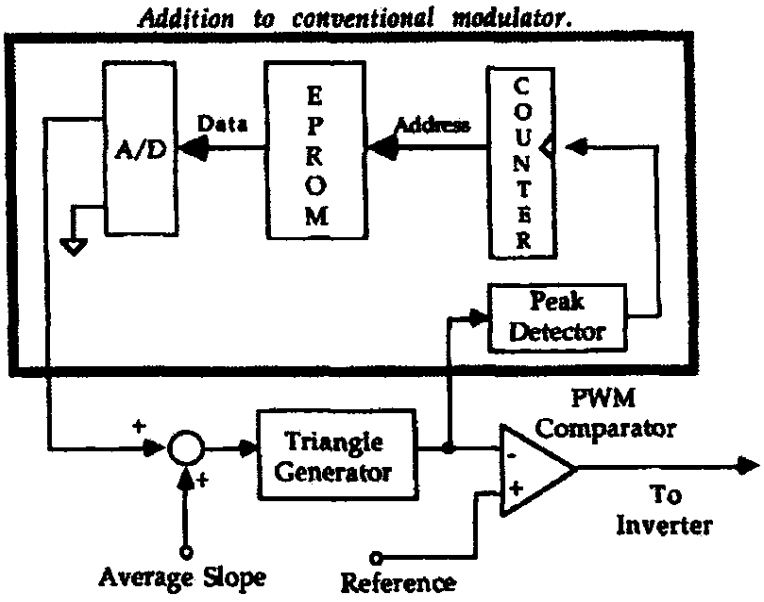

(Habetler, at 359 Fig. 5.) This circuit has the same elements (oscillator (triangle generator) counter, and digital-to-analog converter) as Martin, and also includes an EPROM (a memory chip) for storing a pseudo-random code. (*Id.* at 359)

Wang has the following circuit with the same elements:

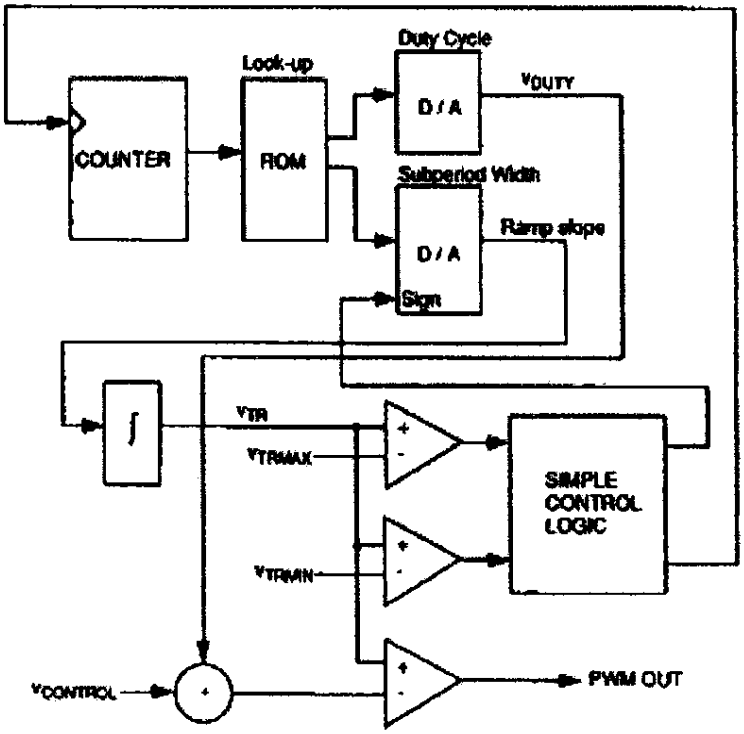

(Wang, at 604 Fig. 20.)

The PTO granted the Request for Reexamination on December 21, 2006, finding all three references raised "[s]ubstantial new questions of patentability" affecting claims 1 and 17-19 of the '876 patent. (Ex. N, Reexam Order, at 2.)

REDACTED

F. Additional Prior Art

Exhibits 17-25 of Dr. Habetler's declaration show that the idea of jittering or dithering a frequency to spread its spectrum was well known decades before the filing of the application of the '876 patent. (*See* Habetler Decl., ¶ 20-21.) In addition, Exhibits 8, 11-12, and 26-31 of Dr. Habetler's declaration show the prior art using oscillators, counters, and digital-to-analog converters coupled together as in claim 1 to provide frequency jittering or dithering in power switches and in other circuits as well that generate EMI. (*See* Habetler Decl. ¶ 15 and 22.)

G. The Accused Product

The AP3700 is a discrete PWM controller. (Ex. O, AP3700 Datasheet, at 1.) **REDACTED**

REDACTED

H. PI's First Lawsuit Against BCD

On June 14, 2007, PI filed its initial complaint against Defendants in the Northern District of California. (*See* Ex. A, Cal. Docket Report, at D.I. 1.) Before the Initial Case Management Conference scheduled for September 20, 2007 (*See* Cal. Docket Report, at D.I. 6), PI's counsel filed a Joint Stipulation and Proposed Order to delay the Conference until November 8, 2007. (*See* Ex. P, Order Rescheduling Conference (Aug. 22, 2007), at 2.) Instead of further delaying the case as PI requested, the court expedited the Conference, ordering it be held on September 13, 2007. (*See id.* at 3.) PI's counsel rejected this earlier date and instead filed an *Ex Parte* Application seeking to delay the Conference "until November 7, 2007." (Ex. Q, PI's *Ex Parte* Application for Continuance, at 1, 2.) The court was unwilling to delay the case

---

REDACTED

to the extent PI requested, and ultimately scheduled the Conference for October 4, 2007. (*See* Cal. Docket Report (entry for Aug. 28, 2007).) On September 7, 2007, the Clerk's Office issued a notice rescheduling the conference for October 18, 2007. (*See id.* at D.I. 13.) PI finally served BCD California on September 10, 2007, and SIM-BCD accepted service on September 24, 2007. (Ex. R, Joint Stipulated Rule 26(f)/Case Management Statement, at 4 (October 11, 2007) ("Joint Statement").)

On October 11, 2007, the parties filed their Joint Stipulated Rule 26(f)/Case Management Statement. (*See id.*) On October 12, 2007, the Clerk's Office issued another notice moving the Conference to October 17, 2007. (*See* Cal. Docket Report, at D.I. 16.) Two days before the scheduled Conference, on October 15, 2007, PI filed a Notice of Voluntary Dismissal without prejudice, which the court ordered the following day. (*See id.* at D.I. 17, 18.)

I. Accused Acts of Infringement

In its First Amended Complaint, PI accuses BCD of:

> infringing, inducing infringement, and contributing to the infringement of the '876 patent in this District and elsewhere by making, using, selling, offering to sell, and/or importing devices, including PWM integrated circuit devices, covered by one or more claims of the '876 patent, and/or contributing to or inducing the same by third-parties, all to the injury of Power Integrations.

(D.I. 50, First Am. Compl. ¶ 17.)

It is undisputed, however, that BCD does not manufacture anything in the United States.

REDACTED

REDACTED

The specific activity PI cares about and seeks to enjoin is SIM-BCD's sales of products to foreign customers, especially sales of products that other companies incorporate into Samsung phone chargers. (PI Br. 1-2, 12-13.) None of SIM-BCD's activities relating to Samsung, however, occurs in the United States.

REDACTED

Nor can it be said that BCD has caused Samsung to sell phone chargers in the United States. Samsung had been selling its phones and chargers in the United States since long before its chargers contained BCD's products. **REDACTED**

Therefore, when the accused products leave SIM-BCD's control, the chips can be used anywhere in the world.

[7] It appears, based on PI's actions in another case, Frank Lum of the company Luminex, requested the accused product samples at PI's request to artificially create an act of infringement in the United States. BCD intends to investigate in discovery.

III. ARGUMENT

A preliminary injunction is a "drastic and extraordinary remedy that is not to be routinely granted." *Nat'l Steel Car, Ltd. v. Canadian Pac. Ry., Ltd.*, 357 F.3d 1319, 1324 (Fed. Cir. 2004) (internal quotation marks omitted); *see also Cordis Corp. v. Medtronic, Inc.*, 780 F.2d 991, 996 (Fed. Cir. 1985) ("Only a viable threat of serious harm which cannot be undone authorizes exercise of the court's equitable power to enjoin before the merits are fully determined."). The burden falls on the moving party to make a "clear showing" it is entitled to injunctive relief. *See Mazurek v. Armstrong*, 520 U.S. 968, 972 (1997) ("It frequently is observed that a preliminary injunction is an extraordinary and drastic remedy, one that should not be granted unless the movant, *by a clear showing,* carries the burden of persuasion." (emphasis in original)); *Reebok Int'l Ltd. v. J. Baker, Inc.*, 32 F.3d 1552, 1555 (Fed. Cir. 1994) ("The burden is always on the movant to show entitlement to a preliminary injunction.").

Specifically, a party seeking a preliminary injunction pursuant to 35 U.S.C. § 283 must demonstrate: "a reasonable likelihood of success on the merits, irreparable harm in the absence of a preliminary injunction, a balance of hardships tipping in its favor, and the injunction's favorable impact on the public interest." *Nat'l Steel Car*, 357 F.3d at 1324-25.

A. PI Has No Reasonable Likelihood of Success on the Merits

1. PI Cannot Demonstrate Infringement of Claim 1 of the '876 Patent

a) The AP3700 Lacks the Claimed "Control Input for Varying the Switching Frequency"

(1) The "control input" is a means-plus-function limitation.[8]

[8] This limitation was not construed in the Fairchild litigation. *See* Habetler Decl., Ex. 3, *Fairchild* Claim Construction Order (Mar. 31, 2006).

When an element is defined solely by the function it performs, the element is interpreted under 35 U.S.C. §112, ¶ 6. *Biodex Corp. v. Loredan Biomedical, Inc.*, 946 F.2d 850, 863 (Fed. Cir. 1991). Section 112, ¶ 6 is a convenience for inventors who want the option of claiming their inventions with "a generic reference for the corresponding structure disclosed in the specification." *Chiuminatta Concrete Concepts, Inc. v. Cardinal Indus., Inc.*, 145 F.3d 1303, 1308 (Fed. Cir. 1998). As the Federal Circuit noted, however, there are costs to invoking the benefits of §112, ¶6, the most significant being that means-plus-function limitations are generally construed more narrowly than conventional claim language. *See Micro Chem., Inc. v. Great Plains Chem. Co.*, 194 F.3d 1250, 1260 (Fed. Cir. 1999) ("Claim treatment outside of the requirements of § 112, ¶ 6, generally gives the claims a broader scope."). Specifically, the scope of the claim is restricted "to the structure disclosed in the specification and equivalents thereof." *Greenberg v. Ethicon Endo-Surgery, Inc.*, 91 F.3d 1580, 1582 (Fed. Cir. 1996).

The "control input" limitation does not contain the word "means" so it is presumptively not subject to 35 U.S.C. § 112, ¶ 6. *See Watts v. XL Sys., Inc.*, 232 F.3d 877, 879-81 (Fed. Cir. 2000). The presumption may be overcome, however, when the claim element in question connotes no structure and is defined entirely by its function. *Al-Site Corp. v. VSI Int'l, Inc.*, 174 F.3d 1308, 1318 (Fed. Cir. 1999). In particular, if the limitation in question does not recite "'sufficient' structure to perform *entirely* the claimed function," it should be construed under § 112, ¶ 6. *Rodime PLC v. Seagate Tech., Inc.*, 174 F.3d 1294, 1304 (Fed. Cir 1999) (emphasis added).

The term "control" is purely functional and merely indicates the purpose of the "input." "Input," moreover, connotes no structure since an "input" can be data, states, a device, a channel, a process, or a physical quantity. (Habetler Decl., Ex. 13, IEEE Dictionary, at 443.) Persons of

ordinary skill would not assign any particular structure to that term. (*See, e.g.*, Habetler Decl. ¶ 24.) Moreover, the claim language does not suggest that the "input" is any particular type of structure, since it can receive, for example, an electric signal, an electromagnetic signal, an audio signal, an optical signal, or power. (*Id.*) Finally, even if one were to conclude that the term "input" connotes *some* structure, there certainly is not enough structure recited, in the words of the *Rodime* court, "to perform *entirely*" the claimed function of "varying the switching frequency." *See supra* pages 6-8. As a result, the "control input" limitation should be construed in accordance with § 112, ¶ 6.

(2) The structure in the '876 patent for performing the function of "varying the switching frequency" includes "node 123."

Since the "control input" is a means-plus-function limitation, it must be construed to cover the corresponding structure, material, or acts described in the specification and equivalents thereof." 35 U.S.C. § 112, ¶ 6. The structure in the '876 patent that corresponds to the control input includes node 123, which adds the current it receives from D/A converter to the primary current from primary current source to create the frequency-varying current. (*See supra* pages 6-8; *see also* '876 patent, col. 2:30-32 (describing the operation of "supplying the primary and secondary currents to a control input of an oscillator for generating a switching frequency which is varied over time.").) In this way, node 123 performs the function of varying the switching frequency. (*See* '876 patent, col. 5:49-56 ("the outputs of the respective current sources 152, 156, 160, and 164 are added to the output of current source 122 *to vary the frequency of the primary oscillator*") (emphasis added); *see also* 6:17-20; 6:25-30.). Indeed, node 123 is the *only* component shown in Figure 1 that is even remotely capable of "varying the switching frequency."

(3) Node 123 is not structurally equivalent to the OREF signal PI identified in the AP3700 as performing that same function.

Once the structure corresponding to the claim element is identified, the patentee bears the burden of proving that the accused product contains structure that is identical or equivalent to the claimed structure. *See, e.g., Laitram Corp. v. Rexnord, Inc.*, 939 F.2d 1533, 1539 (Fed. Cir. 1991).

REDACTED

Therefore, the AP3700 does not infringe claim 1 of

b) PI Should Be Judicially Estopped from Alleging That the Pseudo-Random Frequency Switching of the AP3700 Infringes Claim 1

Claims must be construed the same way for both infringement and validity. *See, e.g., Amazon.com, Inc. v. Barnesandnoble.com, Inc.*, 239 F.3d 1343, 1351 (Fed. Cir. 2001).

REDACTED

REDACTED

PI therefore should be judicially estopped from advancing its infringement theory here.

In *State of New Hampshire v. Maine*, 532 U.S. 742 (2001), the Supreme Court noted that "the circumstances under which judicial estoppel may appropriately be invoked are probably not reducible to any general formulation of principle," but "several factors typically inform the decision." *Id.* at 750 (internal quotations omitted). First, a party's later position must be "clearly inconsistent" with its earlier position. Second, the party must have successfully persuaded the earlier court to accept its position, so that the judicial acceptance of a later inconsistent position would create "the perception that either the first or the second court was misled." Third, the party raising the challenge must show the party advocating the inconsistent position would derive an unfair advantage or impose an unfair detriment on the opposing party if not estopped. *New Hampshire*, 532 U.S. at 750-51. All three of these factors are present.

First, there is no question that PI's infringement allegation against the AP3700 is "clearly inconsistent" with the position it took in *Fairchild* regarding the validity of the '876 patent.

REDACTED

REDACTED

Second, PI successfully convinced the *Fairchild* jury that the claims of the '876 patent were different from circuits that used pseudo-random techniques to vary switching frequency. If this Court denies Fairchild's pending JMOL motion, then judicial estoppel applies. If on the other hand, the Court grants Fairchild's motion, there might not be estoppel, but the result is the same since at least claim 1 of the '876 patent is invalid.

Finally, BCD is clearly being prejudiced by PI's inconsistent position. Indeed, that inconsistency is a major part of PI's case. Accordingly, judicial estoppel should prevent PI from asserting infringement here.

c) The AP3700 Cannot Infringe Claim 1 Because It Has Code Conversion Circuitry

REDACTED

As a result, PI should be estopped from arguing infringement for this reason as well.

d) If, to Avoid Prior Art, PI Insists that the Digital-to-Analog Converter in Claim 1 Must Produce an Output that is Proportional to its Input, Then the AP3700 Does Not have This Claim Element Either

Because, as explained below, the BCD is presenting prior art not considered in the *Fairchild* case and which PI has not taken a position on, some new issues may arise. One may be an attempt to define a claim element, the digital-to-analog converter, very narrowly to avoid certain prior art by requiring that the analog output of the converter vary proportionately to its

REDACTED

2. BCD Has a Substantial Defense that Claim 1 of the '876 Patent Is Invalid

If the alleged infringer raises a "substantial question" regarding invalidity, which the patentee cannot prove "lacks substantial merit," the preliminary injunction should not issue. *Entegris, Inc. v. Pall Corp.*, 490 F.3d 1340, 1351 (Fed. Cir. 2007). An alleged infringer "need not make out a case of actual invalidity." *Abbott Labs. v. Andrx Pharms., Inc.*, 452 F.3d 1331, 1335 (Fed. Cir. 2006). A showing of a "substantial question" regarding invalidity "requires less proof than the clear and convincing showing necessary to establish invalidity itself." *Id.* "The patentee must, however, present a clear case supporting the validity of the patent in suit." *Id.* (internal quotation marks omitted).

To show a substantial likelihood of prevailing on the issue of validity, PI relies solely on the jury's verdict that Fairchild did not demonstrate that three references render claim 1 invalid. PI Br. at 6. In justifying its reliance on that verdict, PI cites *Atlas Powder Co. v. Ireco Chemicals*, 773 F.2d 1230 (Fed. Cir. 1985). PI Br. at 9-10. The defendant in *Atlas Powder*, however, was arguing an invalidity defense that the PTO already rejected and that the Federal Circuit had rejected on appeal as well. *Atlas Powder*, 773 F.2d at 1232. In contrast, the verdict on which PI relies is the subject of JMOL motions the Court has not yet heard, and the PTO has

determined that the prior-art upon which BCD relies presents substantial questions concerning the patentability of the '876 patent's claims. In addition, BCD is relying on prior art and arguments the *Fairchild* jury did not consider. (*See* Habetler Decl. ¶¶ 20-22.)

a) The Existence of the Reexamination Casts Grave Doubts on the Viability of Claim 1 of the '876 Patent

The PTO has found that each of the three references discussed in this opposition raises a substantial new question of patentability. *See supra* pages 9-12. Although there has been no action on the merits, the PTO's statistics show that in 71% of the reexaminations declared, the PTO either finally rejects the claims, or the patentee amends them. *See* Ex. S, *Ex Parte* Reexamination Filing Data, at 2 (USPTO Dec. 31, 2007). Indeed, the fact of the reexamination itself weighs heavily against PI's motion. *See DUSA Pharms., Inc. v. River's Edge Pharms., LLC*, 2007 WL 748448 (D. N.J. Mar. 7, 2007) (finding that defendant demonstrated a changed circumstance that raises a substantial question of validity, based in part on the grant of a reexamination, justifying the dissolution of a preliminary injunction); *Pergo, Inc. v. Faus Group, Inc.*, 401 F. Supp. 2d 515 (E.D.N.C. 2005) ("[W]hile the grant of a motion for reexamination is not conclusive as to the issue of validity, it is probative to the issue of whether defendants have raised a substantial question of validity.").

b) Claim 1 Is Anticipated by Several References, and Thus Invalid Under 35 U.S.C. § 102

In his declaration, Dr. Habetler explains how, even under the Court's claim construction,[10] the three references in the reexamination render claim 1 invalid under 35 U.S.C. § 102. (Habetler Decl., ¶¶ 14-19; Habetler Ex. 14-16 (claim charts).) Dr. Habetler's explanation relies on two issues not before the Court previously. One is the admission by Power Integrations' expert, Robert Blauschild, that where one draws the boundaries for a circuit is somewhat arbitrary. (*Id.* ¶ 16.) The other involves the interpretation of two terms, "counter" and "digital-to-analog converter" that the Court has not construed. (*Id.* ¶ 16-18.)

c) Claim 1 Is Obvious, and Thus Invalid Under 35 U.S.C. § 103

Several prior-art references would have taught a person of ordinary skill in the art that one way to reduce EMI would be to spread the spectrum of the power switching signal among several equally spaced frequencies. (*Id.* ¶¶ 20-21.) Other prior-art references show the circuit of claim 1 in other applications to spread the energy of a clock signal to reduce EMI or to vary the frequency of a clock signal. (*Id.* ¶ 22; Habetler Ex. 32-37 (claim charts).) A person of ordinary skill would have found it obvious to combine the teachings to create the circuitry of the '876 patent, claim 1, in a PWM power controller. (*Id.* ¶ 20-22.) Thus, claim 1 of the '876 patent is also invalid under 35 U.S.C. § 103.

---

[10] BCD respectfully disagrees with the Court's construction of terms, such as "jittering" and "coupled." Since BCD had no opportunity to present its arguments to the Court, it should not be bound by the Court's previous order. *See Markman v. Westview Instruments, Inc.*, 517 U.S. 370, 391 (1996); *KX Indus., L.P. v. PUR Water Purification Prods., Inc.*, 108 F. Supp. 2d 380, 387 (D. Del. 2000) (citing *Markman* and finding that "the court's previous [*Markman* order] does not have issue preclusive effect against [the defendants] in this case.").

B. PI Will Suffer No Irreparable Harm if the Court Does Not Grant a Preliminary Injunction

Before the Supreme Court's decision in *eBay, Inc. v. MercExchange, L.L.C.*, 547 U.S. 388 (2006), the Federal Circuit held that "[i]rreparable harm is presumed when a clear showing of patent validity and infringement has been made." *Amazon.com*, 239 F.3d at 1350. After *eBay*, however, courts have decided that such a presumption no longer exists. *See Sun Optics, Inc. v. FGX Int'l, Inc.*, Civ. No. 07-137, 2007 WL 2228569, at *1 (D. Del. Aug. 2, 2007) (Robinson, J.) ("[T]he notion that there follows a presumption of irreparable harm seems inconsistent with the Supreme Court's holding in [*eBay*]."); *Torspo Hockey Int'l, Inc. v. Kor Hockey Ltd.*, 491 F. Supp. 2d 871, 881 (D. Minn. 2007) ("[T]he Court finds that it may not presume that a patentee who is likely to succeed on the merits at trial will suffer irreparable harm in the absence of a preliminary injunction.").

Even if this Court were to decide a presumption does exist, the presumption is rebuttable. *See Kyphon, Inc. v. Disc-O-Tech Med. Techs.*, No. 04-204, 2004 WL 2898064, at *5 (D. Del. Dec. 10, 2004) (Farnan, J.). "Among the types of evidence that have been found sufficient to rebut a presumption of irreparable injury are: 1) the movant's undue delay in seeking an injunction; 2) the movant's large market share as compared with the minuscule market share of the respondent; and 3) lack of showing that damages would be inadequate as a remedy." *Id.*

1. PI Makes No Showing of Irreparable Harm Caused by Any Infringing Activity of BCD

Section 283 permits injunctions only to protect "right[s] secured by patents." 35 U.S.C. § 283. The only specific harm alleged by PI, however, is its loss of the Samsung business, which allegedly is the result of China's SIM-BCD selling to Samsung's Korean suppliers. *See supra* page 15. PI has no right to enjoin these sales for the simple reason that a United States patent does not confer the right to prevent activity occurring outside of the United States. *Voda v.*

Cordis Corp., 476 F.3d 887, 901 (Fed. Cir. 2007) ("A patent right is limited by the metes and bounds of the jurisdictional territory that granted the right to exclude."); *see also Dowagiac Mfg. Co. v. Minn. Moline Plow Co.*, 235 U.S. 641, 650 (1915) ("The right conferred by a patent under our law is confined to the United States and its territories.") (citations omitted).

PI has no right to enjoin BCD's manufacture and sales of the accused products outside of the United States. This activity cannot constitute "direct" infringement under 35 U.S.C. § 271(a) because that requires the allegedly infringing act to be performed in the United States. 35 U.S.C. § 271(a) ("Whoever without authority makes, uses, offers to sell, or sells any patented invention, within the United States or imports into the United States any patented invention during the term of the patent therefor, infringes the patent."). Likewise, contributory infringement under 35 U.S.C. § 271(c) "has a territorial limitation requiring contributory acts to occur in the United States." *DSU Med. Corp. v. JMS Co., Ltd.*, 471 F.3d 1293, 1304 (Fed. Cir. 2006).

Nor can PI legitimately argue that BCD's sales to Samsung's Korean suppliers are "inducing" Samsung to infringe PI's patents by selling phone chargers containing BCD's accused products in the United States.[11] *See* PI Br. at 2. For BCD to be liable for inducing any infringement that might result from Samsung's U.S. sales, PI would have to show that BCD *intentionally caused* those sales to occur. *See Hewlett-Packard Co. v. Bausch & Lomb Inc.*, 909 F.2d 1464, 1469 (Fed. Cir. 1990) ("Proof of actual intent to cause the acts which constitute the infringement is a necessary prerequisite to finding active inducement."); *see also DSU Med.*, 471 F.3d at 1306 ("inducement requires evidence of culpable conduct, directed to encouraging another's infringement, not merely that the inducer had knowledge of the direct infringer's

[11] Only about 14% of Samsung cell phones are sold in the United States. *See* http://www.isuppli.com/news/default.asp?id-8771. Thus, the vast majority of Samsung's phone chargers cannot possibly be found to infringe.

activities."). Not only has PI failed even to allege that BCD intended for Samsung to infringe a U.S. patent when BCD sold its products to Samsung's suppliers, there is no basis for such an accusation. **REDACTED**

Moreover, Samsung was selling phone chargers in the United States long before its Korean suppliers began buying BCD's products. *Id.*

Accordingly, the centerpiece of PI's irreparable harm argument—the loss of Samsung business—is based on alleged harm flowing from BCD's entirely legal behavior.

2. PI's Undue Delay in Seeking an Injunction Demonstrates the Absence of Irreparable Harm

Although PI's brief portrays the loss of Samsung's business as a devastating blow, the reports it provides to its investors tell a very different story and reveal that PI is, in fact, thriving despite BCD's competition. *See supra* page 3. PI's behavior in this litigation similarly suggests that PI exaggerates its claims of harm.

For example, PI waited seven months after initially filing suit against BCD to file its motion for preliminary injunction. *See supra* pages 13-14. Such lengthy delay in seeking what in essence is emergency relief is not consistent with the actions of a patentee that is being irreparably harmed. *See High Tech Med. Instrumentation, Inc. v. New Image Indus., Inc.*, 49 F.3d 1551, 1557 (Fed. Cir. 1995) ("This court has recognized that delay in seeking a remedy is an important factor bearing on the need for a preliminary injunction."). At the initial Case Management Conference, PI provided two reasons for its delay. First, PI said that it would have been premature to seek a preliminary injunction before the jury returned a verdict rejecting Fairchild's invalidity defenses. (*See* Ex. T (Feb. 7, 2008 Hearing Tr.) at 28.) That verdict, however, was returned in September 2007, four months before PI filed its motion. For its second reason, PI blames BCD, saying that BCD was responsible for PI's delay because BCD's counsel

refused to allow PI's expert to have access to BCD's highly confidential circuit schematics. *See* Feb. 7, 2008 Hearing Tr., at 28 ("we asked them to let our expert see their schematics and they said no, so we had to reverse engineer the part"). But PI had to have a reasonable basis for filing its complaint to satisfy Rule 11 and could have moved for expedited discovery at any time. Moreover, PI voluntarily abandoned its California case just as discovery was beginning (which is how PI's counsel obtained BCD's schematics in the first place). As part of the discovery process, the California court would have entered a protective order that would have allowed PI's expert to review BCD's confidential information. PI has no basis for blaming BCD where PI's own strategic decisions resulted in foreseeable and substantial delay.

3. Money Damages Are Sufficient to Compensate for Any Loss that May Exist in the Absence of an Injunction

To the extent any harm is actually caused by the absence of an injunction, money damages are sufficient to compensate for any loss. PI has not shown otherwise.

Money damages were sufficient in *Motorola* where this court denied a motion for preliminary injunction. *See supra* page 9 n.5. Money damages were sufficient then, and they are sufficient now.[12] To the extent PI can show any loss from infringing behavior (*see supra* pages 25-27), the loss is only economic. Upon any finding of infringement of a valid and enforceable patent, PI could determine any damages it may suffer. Further, as discussed *infra*, PI is thriving in the marketplace. *See Yamashita v. Wilbur-Ellis Co.*, 2006 WL 1320470 (N.D. Cal. May 15, 2006) (finding no showing of irreparable harm where "plaintiff's prominence in the market has been *increasing* during the time of the purported infringement").

[12] PI raises the possibility of BCD not being able to satisfy an award of damages (PI Br. at 13), but points to no evidence in its brief to show that this is possible. Such self-serving and wholly unsupported speculation deserves no consideration.

C. The Balance of Hardships Weighs In Favor of BCD

Granting a preliminary injunction would have a drastic impact on BCD. Samsung is BCD's largest end customer, accounting for approximately 16% of BCD's total revenues in the fourth quarter of 2007. (D.I. 34, Decl. of Kyle Wagner Compton ("Compton Decl."), Ex. I, BCD Form F-1 Statement, at 11.) While any injunction imposed by this court would not prevent the sale of products in China from BCD to Samsung or any other customer, an injunction would put BCD's largest source of revenue in severe jeopardy.

Because BCD sells its products in China for use in non-US markets, an injunction in this case would harm not only the allegedly infringing uses but would have the potential to harm noninfringing uses as well. Samsung's suppliers and other customers may decide to design away from the accused products, even for products destined for non-US markets. PI admits that one of its primary goals in obtaining injunctive relief is to remedy the alleged harm "BCD has caused to Power Integrations . . . including by taking nearly all of Power Integrations' business for Samsung cell phone chargers" and to "get back the Samsung business." PI Br., at 12-13.

Moreover, PI would not necessarily benefit from an injunction since PI and BCD are not the only two competitors in the market.

REDACTED

REDACTED

Thus, granting an injunction may give little benefit to PI, who will continue to face stiff competition.

D. Granting the Preliminary Injunction Power Integrations Seeks Would Violate Fundamental Notions of Sovereignty

"In exercising their sound discretion, courts of equity should pay particular regard for the public consequences in employing the extraordinary remedy of injunction." *Weinberger v. Romero-Barcelo*, 456 U.S. 305, 312 (1982). Granting an injunction here would disserve the public policy interests because of the severe extraterritorial consequences that would result, particularly given the substantial questions of infringement and invalidity, as well as PI's undue delay.

Last year, the Supreme Court explicitly endorsed the view that "[f]oreign conduct is [generally] the domain of foreign law," and that this principle was especially appropriate in patent law because "foreign law 'may embody different policy judgments about the relative rights of inventors, competitors, and the public in patented inventions.'" *Microsoft v. AT&T Corp.*, 127 S. Ct. 1746, 1758 (2007); *see also id.* ("The presumption that United States law governs domestically but does not rule the world applies with particular force in patent law."). The Federal Circuit has also stated that "[c]ourts must also bear in mind that whatever laws are carried into execution, within the limits of any government, are considered as having the same effect every where, so far as they do not occasion a *prejudice to the rights of the other governments,* or their citizens." *Voda*, 476 F.3d at 900; *see also id.* at 902 ("It would be incongruent to allow the sovereign power of one [territory] to be infringed or limited by another sovereign's extension of its jurisdiction.")

PI's proposed order, when understood in context, violates this important public policy. Specifically, PI has asked this Court "to prevent BCD from infringing, inducing infringement, or

contributing to the infringement of claim 1 of the '876 patent by making, using, importing, offering to sell, or selling infringing devices, including specifically the AP3700 and AP3710 chips and power supplies containing the same." (PI Br. 3.) PI's stated intent is "to prevent BCD from further irreparably harming Power Integrations in the market for power supply controller chips, including those used in high end Samsung cell phone chargers." (*Id.*) It is undisputed that SIM-BCD's chip sales for Samsung charger products occur overseas. *See supra* page 15. Therefore, the effect of PI's request will be to prevent BCD from competing with PI in the Korean market.

As the Supreme Court emphasized in *Microsoft v. AT&T*, if an inventor "desires to prevent copying in foreign countries, its remedy today lies in obtaining and enforcing foreign patents." *Microsoft v. AT&T*, 127 S. Ct. at 1758; *see also Deepsouth Packing Co. v. Laitram Corp.*, 406 U.S. 518, 531 (1972) ("To the degree that the inventor needs protection in markets other than those of this country, the wording of [the Patent Act] reveals a congressional intent to have him seek it abroad through patents secured in countries where his goods are being used.").[13]

The Supreme Court's comments in *Microsoft* and *Deepsouth* deserve particular consideration here because PI has made a deliberate choice not to avail itself of the patent laws of China or Korea, or any other foreign country for that matter, despite its dependence on foreign sales. *See supra* page 3. PI's demand for an injunction to prevent BCD from selling its products in foreign countries where PI failed to protect its own invention is not only contrary to law, it is contrary to the equities, which any decision concerning an injunction must take into account.

---

[13] Congress responded to *Deepsouth Packing Co.* with § 271(f), which has some extraterritorial effects. *Microsoft Corp.*, 127 S. Ct. at 1752. Section 271(f), however, does not apply in this case.

Public policy also favors maintaining the status quo and allowing free market competition to continue, particularly given the substantial questions concerning infringement and validity in this case. PI asserts than an injunction is "[t]he only way to preserve the status quo." (PI Br. at 14.) The status quo that PI apparently seeks to preserve, however, was the status quo in late-2006, when Defendants released the AP3700 and began to achieve success in the marketplace with the product. Now, more than a year later, the status quo has changed. An injunction is inappropriate here where, instead of maintaining the status quo, PI seeks to reverse the changes in the status quo over the course of a year, a position PI finds itself in only because of its own delay. *See supra* pages 13-14. A grant of an injunction in this case will reward PI for its delay in seeking preliminary injunctive relief to the point when an injunction can inflict maximum harm, and would encourage other patentees to do the same.

IV. CONCLUSION

For the reasons given above, BCD respectfully requests that Power Integrations' motion for entry of a preliminary injunction be denied in its entirety.

ASHBY & GEDDES

/s/ Steven J. Balick

Steven J. Balick (I.D. #2114)
John G. Day (I.D. #2403)
Tiffany Geyer Lydon (I.D. #3950)
500 Delaware Avenue, 8th Floor
P.O. Box 1150
Wilmington, Delaware 19899
(302) 654-1888

Attorneys for Defendants
BCD Semiconductor Corporation and
Shanghai SIM-BCD Semiconductor
Manufacturing, Co., LTD..

Of Counsel:

E. Robert Yoches
FINNEGAN, HENDERSON, FARABOW,
GARRETT & DUNNER, L.L.P.
901 New York Avenue, NW
Washington, DC 20001
(202) 408-4000

Robert L. Burns
FINNEGAN, HENDERSON, FARABOW,
GARRETT & DUNNER, L.L.P.
11955 Freedom Drive
Reston, VA 20190
(571) 203-2700

Erik R. Puknys
FINNEGAN, HENDERSON, FARABOW,
GARRETT & DUNNER, L.L.P.
3300 Hillview Avenue
Palo Alto, CA 94304
(650) 849-6600

Dated: April 7, 2008

EXHIBIT A
(California Docket Report)



ADRMOP, AO279, CLOSED, E-Filing

I. U.S. District Court
California Northern District (San Francisco)
CIVIL DOCKET FOR CASE #: 3:07-cv-03137-WHA

Power Integrations, Inc. v. BCD Semiconductor Corporation
Assigned to: Hon. William H. Alsup
Cause: 28:1338 Patent Infringement

Date Filed: 06/14/2007
Date Terminated: 10/16/2007
Jury Demand: Plaintiff
Nature of Suit: 830 Patent
Jurisdiction: Federal Question

Plaintiff

Power Integrations, Inc.
a Delaware corporation

represented by **Howard Glenn Pollack**
Fish & Richardson P.C.
500 Arguello Street
Suite 500
Redwood City, CA 94063
650-839-5070
Fax: 650-839-5071
Email: pollack@fr.com
LEAD ATTORNEY
ATTORNEY TO BE NOTICED

Frank Everett Scherkenbach
Fish & Richardson P.C.
225 Franklin Street
Boston, MA 02110-2804
617-542-5070
Fax: 617-542-8906
Email: scherkenbach@fr.com
ATTORNEY TO BE NOTICED

Michael Richard Headley
Fish & Richardson P.C.

500 Arguello St., Ste. 500
Redwood City, CA 94063
650-839-5139
Fax: 650-8395071
Email: headley@fr.com
ATTORNEY TO BE NOTICED

Shaham Kameron Parvin
Fish & Richardson P.C.
500 Arguello Street
Suite 500
Redwood City, CA 94063
650-839-5070
Fax: 650-839-5071
Email: parvin@fr.com
ATTORNEY TO BE NOTICED

V.

Defendant

BCD Semiconductor Corporation
a California corporation

represented by

E. Robert Yoches
Finnegan Henderson Farabow Garrett & Dunner LLP
901 New York Avenue, NW
Washington, DC 20001-4413
202-408-4000
Fax: 202-408-4400
ATTORNEY TO BE NOTICED

Erik Raymond Puknys
Finnegan, Henderson, Farabow, Garrett &
3300 Hillview Avenue
Palo Alto, CA 94304
650/849-6644
Fax: 650.849.6666
Email: erik.puknys@finnegan.com
ATTORNEY TO BE NOTICED

Robert L. Burns
Finnegan Henderson Farabow Garrett & Dunner
11955 Freedom Dr.
Reston, VA 20190-5675
571-203-2700

ATTORNEY TO BE NOTICED

Defendant

Shanghai SIM-BCD Semiconductor Manufacturing, Co., Ltd.

represented by **E. Robert Yoches**
(See above for address)
ATTORNEY TO BE NOTICED

Robert L. Burns
(See above for address)
ATTORNEY TO BE NOTICED

Date Filed	#	Docket Text
06/14/2007	1	COMPLAINT (with jury demand) against BCD Semiconductor Corporation, Shanghai SIM-BCD Semiconductor Manufacturing, Co., Ltd. (Filing fee $350, receipt number 56411001170). Filed by Power Integrations, Inc. (kc, COURT STAFF) (Filed on 6/14/2007) Modified on 6/18/2007 (cjl, COURT STAFF). Additional attachment(s) added on 6/26/2007 (cjl, COURT STAFF). (Entered: 06/15/2007)
06/14/2007		CASE DESIGNATED for Electronic Filing. (kc, COURT STAFF) (Filed on 6/14/2007) (Entered: 06/15/2007)
06/14/2007	2	ADR SCHEDULING ORDER: Case Management Statement due by 9/10/2007. Case Management Conference set for 9/17/2007 at 04:00 PM. (Attachments: # 1 Standing Order)(kc, COURT STAFF) (Filed on 6/14/2007) (Entered: 06/15/2007)
06/14/2007		REPORT on the filing or determination of an action regarding Patents (cc: form mailed to register). (kc, COURT STAFF) (Filed on 6/14/2007) (Entered: 06/15/2007)
06/14/2007		Summons Issued as to BCD Semiconductor Corporation, Shanghai SIM-BCD Semiconductor Manufacturing, Co., Ltd.. (cjl, COURT STAFF) (Filed on 6/14/2007) (Entered: 06/18/2007)
07/23/2007	3	Declination to Proceed Before a U.S. Magistrate Judge by Power Integrations, Inc.. (Parvin, Shaham) (Filed on 7/23/2007) (Entered: 07/23/2007)
07/23/2007	4	CLERK'S NOTICE of Impending Reassignment to U.S. District Judge (wdblc1, COURT STAFF) (Filed on 7/23/2007) (Entered: 07/23/2007)
07/24/2007	5	ORDER REASSIGNING CASE. Case reassigned to Judge William H. Alsup for all further proceedings. Judge Wayne D. Brazil no longer

		assigned to the case. Signed by Judge Executive Committee on 7/24/07. (kk, COURT STAFF) (Filed on 7/24/2007) (Entered: 07/24/2007)
08/06/2007	6	CLERK'S NOTICE Scheduling Initial Case Management Conference on Reassignment set for 9/20/2007 11:00 AM. Case Management Statement due by 9/13/2007. (dt, COURT STAFF) (Filed on 8/6/2007) (Entered: 08/06/2007)
08/06/2007	7	SUPPLEMENTAL ORDER TO ORDER SETTING INITIAL CASE MANAGEMENT CONFERENCE re 6 Clerks Notice. Signed by Judge William Alsup on 4/9/07. (dt, COURT STAFF) (Filed on 8/6/2007) (Entered: 08/06/2007)
08/22/2007	8	STIPULATION *JOINT STIPULATION AND [PROPOSED] ORDER RESCHEDULING CASE MANAGEMENT CONFERENCE* by Power Integrations, Inc.. (Headley, Michael) (Filed on 8/22/2007) (Entered: 08/22/2007)
08/22/2007	9	STIPULATION AND ORDER [re 8 Stipulation filed by Power Integrations, Inc.]. Signed by Judge William Alsup on 8/22/2007. (whasec, COURT STAFF) (Filed on 8/22/2007) (Entered: 08/22/2007)
08/22/2007		Set/Reset Deadlines:, Set/Reset Hearings: Case Management Statement due by 9/6/2007. Case Management Conference set for 9/13/2007 11:00 AM. (sis, COURT STAFF) (Filed on 8/22/2007) (Entered: 08/23/2007)
08/23/2007	10	First Ex Parte Application *for Continuance of Initial Case Management Conference* filed by Power Integrations, Inc.. (Attachments: # 1 Proposed Order)(Pollack, Howard) (Filed on 8/23/2007) (Entered: 08/23/2007)
08/27/2007	11	STIPULATION and Proposed Order selecting Private ADR by Power Integrations, Inc. (Pollack, Howard) (Filed on 8/27/2007) (Entered: 08/27/2007)
08/28/2007	12	ORDER by Judge Alsup granting in part and denying in part 10 Ex Parte Application to Continue Initial Case Management Conference (whalc1, COURT STAFF) (Filed on 8/28/2007) (Entered: 08/28/2007)
08/28/2007		Set Deadlines/Hearings: Case Management Statement due by 9/27/2007. Case Management Conference set for 10/4/2007 11:00 AM. (sis, COURT STAFF) (Filed on 8/28/2007) (Entered: 08/29/2007)
09/07/2007	13	CLERK'S NOTICE Rescheduling Hearing. Case Management Conference set for 10/18/2007 11:00 AM. Case Management Statement due by 10/11/2007. (dt, COURT STAFF) (Filed on 9/7/2007) (Entered: 09/07/2007)

10/09/2007	14	STIPULATION *TO EXTEND TIME TO ANSWER OR OTHERWISE RESPOND TO THE COMPLAINT* by BCD Semiconductor Corporation. (Puknys, Erik) (Filed on 10/9/2007) (Entered: 10/09/2007)
10/11/2007	15	JOINT CASE MANAGEMENT STATEMENT , *RULE 26(F) REPORT, AND PROPOSED ORDER* filed by Power Integrations, Inc.. (Pollack, Howard) (Filed on 10/11/2007) (Entered: 10/11/2007)
10/12/2007	16	CLERK'S NOTICE Rescheduling Case Management Conference set for 10/17/2007 02:00 PM. (dt, COURT STAFF) (Filed on 10/12/2007) (Entered: 10/12/2007)
10/15/2007	17	NOTICE of Voluntary Dismissal *Without Prejudice Under Rule 41(A) and [Proposed] Order* by Power Integrations, Inc. (Pollack, Howard) (Filed on 10/15/2007) (Entered: 10/15/2007)
10/15/2007	19	MOTION for leave to appear in Pro Hac Vice, E. Robert Yoches (Filing fee $ 210, receipt number 34611011473.) filed by BCD Semiconductor Corporation, Shanghai SIM-BCD Semiconductor Manufacturing, Co., Ltd.. (sis, COURT STAFF) (Filed on 10/15/2007) (Entered: 10/16/2007)
10/15/2007		Received Order re 19 MOTION for leave to appear in Pro Hac Vice (Filing fee $ 210, receipt number 34611011473.) by BCD Semiconductor Corporation, Shanghai SIM-BCD Semiconductor Manufacturing, Co., Ltd.. (sis, COURT STAFF) (Filed on 10/15/2007) (Entered: 10/16/2007)
10/15/2007	20	MOTION for leave to appear in Pro Hac Vice, Robert L. Burns, Esq., (Filing fee $ 210, receipt number 34611011472.) filed by BCD Semiconductor Corporation, Shanghai SIM-BCD Semiconductor Manufacturing, Co., Ltd.. (sis, COURT STAFF) (Filed on 10/15/2007) (Entered: 10/16/2007)
10/15/2007		Received Order re 20 MOTION for leave to appear in Pro Hac Vice (Filing fee $ 210, receipt number 34611011472.) by BCD Semiconductor Corporation, Shanghai SIM-BCD Semiconductor Manufacturing, Co., Ltd.. (sis, COURT STAFF) (Filed on 10/15/2007) (Entered: 10/16/2007)
10/15/2007	21	CERTIFICATE OF SERVICE by BCD Semiconductor Corporation, Shanghai SIM-BCD Semiconductor Manufacturing, Co., Ltd. re Received Order, Received Order, 20 MOTION for leave to appear in Pro Hac Vice (Filing fee $ 210, receipt number 3461101147.) MOTION for leave to appear in Pro Hac Vice (Filing fee $ 210, receipt number 3461101147.), 19 MOTION for leave to appear in Pro Hac Vice (Filing fee $ 210, receipt number 3461101147.) MOTION

		for leave to appear in Pro Hac Vice (Filing fee $ 210, receipt number 3461101147.) (sis, COURT STAFF) (Filed on 10/15/2007) (Entered: 10/16/2007)
10/16/2007	18	ORDER OF VOLUNTARY DISMISSAL WITHOUT PREJUDICE. Signed by Judge Alsup on October 16, 2007. (whalc1, COURT STAFF) (Filed on 10/16/2007) (Entered: 10/16/2007)
10/17/2007	22	ORDER granting application for admission of Robert L. Burns pro hac vice. Signed by Judge William H Alsup on 10/17/2007. (cgk, COURT STAFF) (Filed on 10/17/2007) (Entered: 10/17/2007)
10/17/2007	23	ORDER granting application for admission of E. Robert Yoches pro hac vice. Signed by Judge William H Alsup on 10/17/2007. (cgk, COURT STAFF) (Filed on 10/17/2007) (Entered: 10/17/2007)

EXHIBIT B
(Power Integrations', Inc. Form 10-K FY Ending 12/31/2007)

10-K 1 d10k.htm FORM 10-K

I. **Table of Contents**

UNITED STATES
SECURITIES AND EXCHANGE COMMISSION
Washington, DC 20549

FORM 10-K

(Mark One)

☒ **Annual report pursuant to Section 13 or 15(d) of the Securities Exchange Act of 1934 for the fiscal year ended December 31, 2007**

or

☐ **Transition report pursuant to Section 13 or 15(d) of the Securities Exchange Act of 1934 for the transition period from to**

Commission File Number 0-23441

POWER INTEGRATIONS, INC.
(Exact name of registrant as specified in its charter)

DELAWARE	**94-3065014**
(State or other jurisdiction of Incorporation or organization)	**(I.R.S. Employer Identification No.)**
5245 Hellyer Avenue, San Jose, California	**95138-1002**
(Address of principal executive offices)	**(Zip code)**

(408) 414-9200
(Registrant's telephone number, including area code)

Securities registered pursuant to Section 12(b) of the Act:

Title of Each Class	Name of Each Exchange on Which Registered
Common Stock, $.001 Par Value	The NASDAQ Stock Market, Inc

Indicate by check mark if the registrant is a well-known seasoned issuer, as defined in Rule 405 of the Securities Act. YES ☐ NO ☒

Indicate by check mark if the registrant is not required to file reports pursuant to section 13 or Section 15(d) of the Act. YES ☐ NO ☒

Indicate by check mark whether the registrant (1) has filed all reports required to be filed by Section 13 or 15(d) of the Securities Act of 1934 during the preceding 12 months (or for such shorter period that the registrant was required to file such reports), and (2) has been subject to such filing requirements for the past 90 days. YES ☒ NO ☐

Indicate by check mark if disclosure of delinquent filers pursuant to Item 405 of Regulation S-K is not contained herein, and will not be contained, to the best of registrant's knowledge, in definitive proxy or information statements incorporated by reference in Part III of this Form 10-K or any amendment to this Form 10-K. ☒

Indicate by check mark whether the registrant is a large accelerated filer, an accelerated filer, a non-accelerated filer, or a smaller reporting company. See the definitions of "large accelerated filer", "accelerated filer" and "smaller reporting company" in Rule 12b-2 of the Exchange Act:

Large accelerated filer ☐	Accelerated filer ☒	Non-accelerated filer ☐ (Do not check if a smaller reporting company)	Smaller reporting company ☐

Indicate by check mark whether the registrant is a shell company (as defined in Rule 12b-2 of the Exchange Act). YES ☐ NO ☒

The aggregate market value of registrant's voting and non-voting common stock held by nonaffiliates of registrant on June 29, 2007, the last business day of the registrant's most recently completed second fiscal quarter, was approximately $469,311,761, based upon the closing sale price of the common stock as reported on The NASDAQ Global Market. Shares of common stock held by each officer, director and holder of 5% or more of the outstanding common stock have been excluded in that such persons may be deemed to be affiliates. This determination of affiliate status is not a conclusive determination for other purposes.

Outstanding shares of registrant's common stock, $0.001 par value, as of February 29, 2008: 30,239,686.

DOCUMENTS INCORPORATED BY REFERENCE

The information required by Part III of this report, to the extent not set forth herein, is incorporated by reference from the Registrant's definitive proxy statement relating to the 2008 annual meeting of stockholders, which definitive proxy statement will be filed with the Securities and Exchange Commission within 120 days after the fiscal year to which this Report relates.

II. **Table of Contents**

TABLE OF CONTENTS

PART I

		Page
ITEM 1.	BUSINESS	3
ITEM 1A.	RISK FACTORS	14
ITEM 1B.	UNRESOLVED STAFF COMMENTS	20
ITEM 2.	PROPERTIES	21
ITEM 3.	LEGAL PROCEEDINGS	21
ITEM 4.	SUBMISSION OF MATTERS TO A VOTE OF SECURITY HOLDERS	24

PART II

ITEM 5.	MARKET FOR REGISTRANT'S COMMON EQUITY, RELATED STOCKHOLDER MATTERS AND ISSUER PURCHASES OF EQUITY SECURITIES	25
ITEM 6.	SELECTED FINANCIAL DATA	27
ITEM 7.	MANAGEMENT'S DISCUSSION AND ANALYSIS OF FINANCIAL CONDITION AND RESULTS OF OPERATIONS	28
ITEM 7A.	QUANTITATIVE AND QUALITATIVE DISCLOSURES ABOUT MARKET RISK	40
ITEM 8.	FINANCIAL STATEMENTS AND SUPPLEMENTARY DATA	42
ITEM 9.	CHANGES IN AND DISAGREEMENTS WITH ACCOUNTANTS ON ACCOUNTING AND FINANCIAL DISCLOSURE	42
ITEM 9A.	CONTROLS AND PROCEDURES	42
ITEM 9B.	OTHER INFORMATION	46

PART III

ITEM 10. DIRECTORS, EXECUTIVE OFFICERS AND CORPORATE GOVERNANCE 47
ITEM 11. EXECUTIVE COMPENSATION 47
ITEM 12. SECURITY OWNERSHIP OF CERTAIN BENEFICIAL OWNERS AND MANAGEMENT AND RELATED STOCKHOLDER MATTERS 47
ITEM 13. CERTAIN RELATIONSHIPS AND RELATED TRANSACTIONS, AND DIRECTOR INDEPENDENCE 48
ITEM 14. PRINCIPAL ACCOUNTANT FEES AND SERVICES 48

PART IV

ITEM 15. EXHIBITS AND FINANCIAL STATEMENT SCHEDULES 49
SIGNATURES 85

CAUTIONARY NOTE REGARDING FORWARD-LOOKING STATEMENTS

This Annual Report on Form 10-K includes a number of forward-looking statements that involve many risks and uncertainties. In some cases, forward-looking statements are indicated by the use of words such as “would”, “could”, “will”, “may”, “expect”, “believe”, “should”, “anticipate”, “outlook”, “if”, “future”, “intend”, “plan”, “estimate”, “predict”, “potential”, “targets”, “seek” or “continue” and similar words and phrases, including the negatives of these terms, or other variations of these terms. These statements reflect our current views with respect to future events and our potential financial performance and are subject to risks and uncertainties that could cause our actual results and financial position to differ materially and adversely from what is projected or implied in any forward-looking statements included in this Form 10-K. These factors include, but are not limited to: our ability to maintain and establish strategic relationships; the risks inherent in the development and delivery of complex technologies; our ability to attract, retain and motivate qualified personnel; the emergence of new markets for our products and services, and our ability to compete in those markets based on timeliness, cost and market demand; and our limited financial resources. We make these forward looking statements based upon information available on the date of this Form 10-K, and we have no obligation (and expressly disclaim any obligation) to update or alter any forward-looking statements, whether as a result of new information or otherwise. In evaluating these statements, you should specifically consider the risks described under Item 1A of Part I—“Risk Factors,” Item 7 of Part II—“Management’s Discussion and Analysis of Financial Condition and Results of Operations” and elsewhere in this Annual Report on Form 10-K.

PART I

TOPSwitch, TinySwitch, LinkSwitch, DPA-Switch, EcoSmart, and PI Expert are trademarks of Power Integrations, Inc.

Item 1. Business

Overview

We design, develop, manufacture and market proprietary, high-voltage, analog integrated circuits, commonly referred to as ICs. Our ICs are used in electronic power supplies, also known as switched-mode power supplies or switchers. Power supplies convert electricity from a high-voltage source, such as a wall socket, to the type of power needed by a given electronic device, such as a cellphone or a computer. This conversion entails, among other functions, reducing the voltage and, when necessary, converting alternating current to direct current, referred to as

AC-DC conversion. Switched-mode power supplies perform these functions using an array of electronic components, often including ICs such as ours. The vast majority of our ICs are used in AC-DC switchers, although we also target certain high-voltage DC-DC applications such as power over Ethernet, or PoE. Our focus is on applications that are sensitive to size, portability, energy efficiency and time-to-market, which are the primary benefits that our ICs provide. We generally target power-supply applications in the following markets:

* the communications market;
* the consumer market;
* the computer market; and
* the industrial market.

We believe our patented TOPSwitch ICs, introduced in 1994, were the first highly integrated power conversion ICs to achieve widespread market acceptance. Since the introduction of TOPSwitch, we have introduced a number of other families of ICs that further improve upon the functionality and cost-effectiveness of TOPSwitch and enable us to address a wider range of AC-DC applications as well as high-voltage DC-DC applications such as power-over-ethernet, or PoE. Since introducing TOPSwitch in 1994, we have shipped approximately 2.7 billion ICs.

Industry Background

Virtually every electronic device that plugs into a wall socket requires a power supply to convert the high-voltage alternating current provided by electric utilities into the low-voltage direct current required by most electronic devices. A power supply may be located inside a device, such as a DVD player or desktop computer, or it may be outside the device as in the case of a cellphone charger or an adapter for a cordless phone.

Until approximately 1970, AC-DC power supplies were generally in the form of line-frequency, or linear, transformers. These devices, consisting primarily of copper wire wound around an iron core, tend to be bulky and heavy, and typically waste a substantial amount of electricity. In the 1970s, the invention of high-voltage discrete semiconductors enabled the development of a new generation of power supplies known as switched-mode power supplies, or switchers. These switchers generally came to be a cost-effective alternative to linear transformers in applications requiring more than about three watts of power.

In addition to their cost advantages in higher-power applications, switchers are generally smaller, lighter-weight and more energy-efficient than linear transformers. However, switchers designed with discrete components are highly complex, containing numerous components and requiring a high level of analog design expertise. Further, discrete switchers can be relatively costly and difficult to manufacture due to their complexity

and high component count. These drawbacks tend to result in time-to-market and development risks for new products. Also, some discrete switchers lack inherent safety and energy-efficiency features; adding these features may further increase the component count, cost and complexity of the power supply.

Early attempts to replace discrete switchers with IC-based switchers did not achieve widespread acceptance in the marketplace because these integrated switchers were not cost-effective. In 1994 we introduced TOPSwitch, the industry's first cost-effective high-voltage IC for power conversion.

Our Highly Integrated Solution

Our patented ICs integrate onto a single chip many of the functions otherwise performed by numerous discrete electronic components. In particular, our ICs combine a high-voltage power transistor, or MOSFET, with low-voltage control circuitry. Because of this integration, our ICs enable power supplies to have superior features and functionality at a total cost equal to or lower than that of discrete switchers and linear transformers. Our products offer the following key benefits to power supplies:

- *Fewer Components, Reduced Size and Enhanced Functionality*

  Our highly integrated ICs, used in combination with our patented power-supply design techniques, enable the design and production of switchers that use up to 70% fewer components compared to discrete switchers. For example, our ICs provide safety and reliability features such as thermal and short-circuit protection, while discrete switchers must include additional components, and therefore incur additional cost, to provide these functions. Switchers that incorporate our ICs are also smaller, lighter, and more portable than comparable power supplies built with linear transformers, which are still commonly used in many low-power applications.

- *Improved Efficiency*

  Our patented EcoSmart technology, included in all of our ICs introduced since 1998, improves the energy efficiency of electronic devices during normal operation as well as standby and "no-load" conditions. This technology enables manufacturers to cost-effectively meet the growing demand for energy-efficient products, and to comply with increasingly stringent energy-efficiency requirements.

- *Reduced Time-to-Market*

  Our integrated circuits make power supply designs simpler and more suitable for high-volume manufacturing compared to discrete switchers. We also provide automated design tools and reference designs that reduce time-to-market and product development risk.

- *Wide Power Range and Scalability*

  We estimate that products in our current IC families can address a power range encompassing approximately 70 percent of the AC-DC power supplies, as well as certain high-voltage DC-DC applications. Within each of our product families, the designer can scale up or down in power to address a wide range of designs with minimal design effort.

Energy Efficiency

Linear transformers and many discrete switchers draw significantly more electricity than the amount needed by the devices they power. As a result, billions of dollars worth of electricity is wasted each year, and millions of tons of greenhouse gases are unnecessarily produced. Energy waste occurs during both normal operation of a device and in standby mode, when the device is performing little or no useful function. For example, computers and printers waste energy while in "sleep" mode. TVs and DVD players that are turned off by remote control consume energy while awaiting a remote control signal to turn them back on. A cellphone charger left plugged into a wall outlet continues to draw electricity even when not connected to the phone (a condition known as "no-load"). Many common household appliances, such as microwave ovens, dishwashers and washing machines,

consume power when not in use. One study has estimated that standby power alone amounted to as much as ten percent of residential energy consumption in Organization for Economic Co-operation and Development, or OECD, countries.

Lighting is another major source of energy waste. Only about five percent of the energy consumed by traditional incandescent light bulbs is converted to light, while the remainder is wasted as heat. The Alliance to Save Energy estimates that a conversion to efficient lighting technologies such as compact fluorescent bulbs and light-emitting diodes, or LEDs, could save as much as $18 billion worth of electricity and 158 million tons of carbon dioxide emissions per year in the U.S. alone.

As concerns about the environmental impact of carbon emissions continue to mount, policymakers are taking action to promote energy efficiency. For example, the ENERGY STAR program and the European Union Code of Conduct encourage manufacturers of electronic devices such as home appliances, DVD players, computers, TVs and external power supplies to comply with voluntary energy-efficiency standards. In 2007, the California Energy

Commission, or CEC, implemented mandatory efficiency standards for external power supplies. The CEC standards will be implemented nationwide in July 2008 as a result of the Energy Independence and Security Act of 2007 (EISA). The EISA also requires substantial improvements in the efficiency of lighting technologies beginning in 2012; these new rules are expected to result in increased adoption of compact fluorescent and LED technologies for general lighting. Plans to phase out incandescent lamps have also been announced in Canada, Australia and Europe. The EISA also incorporates the requirements of Executive Order 13221, signed in 2001 by President Bush, which requires that electronic products purchased by the Federal government consume less than one watt in standby mode.

Our EcoSmart technology, included in all of our ICs introduced since 1998, dramatically improves the efficiency of electronic devices, reducing waste in both operating and standby modes. We believe that this technology allows manufacturers to meet all current and proposed worldwide energy-efficiency regulations for electronic products. Our ICs can also be utilized in power conversion circuitry, or ballasts, for LED lighting, an emerging application for our technology. We estimate that our technology has saved more than $2.6 billion in electricity costs worldwide since 1998.

Products

Below is a brief description of our products:

* *TOPSwitch*

  TOPSwitch, our first commercially successful product, was introduced in 1994. The key benefits that the TOPSwitch family of products has brought to power supplies, compared to discrete switchers, are fewer components, reduced size, enhanced functionality and lower cost in many applications. Our TOPSwitch products integrate a pulse width modulation, or PWM, controller, a high-voltage MOSFET and a number of other electronic components.

  In September 2007, we introduced TOPSwitch-HX, the fifth generation of the TOPSwitch family of products. TOPSwitch-HX incorporates the features offered in earlier TOPSwitch products as well as new features such as a multi-mode control scheme that provides highly efficient operation across the entire load range, eliminating the need for a separate standby power supply in some applications. TOPSwitch-HX addresses applications at the higher end of our current addressable power range including set-top boxes, DVD players, desktop computers, LCD monitors, and printers.

* *TinySwitch*

  We introduced the TinySwitch family of products in September 1998. TinySwitch was the first family of ICs to incorporate our EcoSmart technology. In February 2006, we introduced the third generation of the TinySwitch line, TinySwitch-III. TinySwitch-III further improves upon the cost-effectiveness of

  previous generations, and includes new features that further enhance design flexibility and energy efficiency. Applications for TinySwitch-III include standby power supplies for desktop PCs, adapters for such devices as cellphones, PDAs, digital cameras, computer peripherals, and power tools, as well as power supplies for home entertainment equipment, appliances, LED light fixtures and many other applications.

  In March 2006 and May 2007, respectively, we introduced PeakSwitch and TinySwitch-PK, extensions of the TinySwitch family targeted at applications requiring a high peak-to-average power ratio, such as printers and audio amplifiers. These products supply momentary bursts of peak power by automatically increasing the switching frequency of the IC's integrated MOSFET for several milliseconds before returning to continuous-mode operation. This approach allows the use of transformers, capacitors and other components sized for the power supply's average continuous power rather than its peak power level.

* *LinkSwitch*

We introduced the LinkSwitch family of products in September 2002. The LinkSwitch family of products includes the LinkSwitch-TN, LinkSwitch-XT and LinkSwitch-LP family extensions. Deriving its name from the phrase "linear-killer switch," LinkSwitch is the industry's first highly integrated high-voltage power conversion IC designed specifically to replace linear transformers. Applications for LinkSwitch include low-power adapters and chargers for personal electronics such as cellphones, cordless phones, digital cameras, and MP3 players. LinkSwitch is also used in a wide range of other applications, including home appliances and industrial applications.

* *DPA-Switch*

The DPA-Switch family of products, introduced in June 2002, is the first monolithic high-voltage power conversion IC designed specifically for use in DC-DC converters and distributed power architectures. It is capable of supplying output power levels of up to 100 watts. DPA-Switch allows designers to eliminate up to 50 external components from the design of a typical discrete DC-DC converter, resulting in a shorter design cycle, smaller board size and higher reliability. Applications include power-over-Ethernet powered devices such as voice-over-IP phones and security cameras, as well as network hubs, line cards, servers, digital PBX phones, DC-DC converter modules and industrial controls.

Revenue mix by product family for the years ended December 31, 2007, 2006 and 2005 was approximately as follows:

	Years Ended December 31,		
Product Family	**2007**	**2006**	**2005**
TinySwitch	52%	53%	57%
TOPSwitch	28%	36%	38%
LinkSwitch	18%	9%	5%
DPA-Switch	2%	2%	—%

VIII. Table of Contents

Markets and Customers

Our strategy is to target markets that can benefit the most from our highly integrated power conversion ICs. The following chart shows the primary applications of our products in power supplies in several major market categories.

Market Category	Primary Applications
• ***Communications***	Cellphone chargers, cordless phones, broadband modems, power-over-Ethernet devices including voice-over-IP phones, other network and telecom gear
• ***Consumer***	Set-top boxes for cable and satellite services, digital cameras, DVD players, LCD TVs, major appliances, personal care and small appliances, audio amplifiers
• ***Computer***	Standby power for desktop PCs and servers, LCD monitors, printers, LCD projectors, PDAs
• ***Industrial Electronics***	Industrial controls, utility meters, motor controls, uninterruptible power supplies, emergency lighting, LED lighting

Revenue by our end market categories for 2007 was approximately 30 percent consumer, 27 percent communications, 21 percent computer, 15 percent industrial electronics and 7 percent other markets.

Sales, Distribution and Marketing

We sell our products to original equipment manufacturers, or OEMs, and merchant power supply manufacturers through a direct sales staff and through a worldwide network of independent sales representatives and distributors. We have sales offices in California, Georgia and Illinois, as well as in England, France, Germany, Italy, India, China, Japan, Korea, Singapore and Taiwan. Direct sales to OEMs and merchant power supply manufacturers represented approximately 36%, 37% and 40% of our net product revenues for 2007, 2006 and 2005, respectively, while sales through distributors accounted for approximately 64%, 63% and 60% for 2007, 2006 and 2005, respectively. All distributors are entitled to certain return privileges based on sales revenue and are protected from price reductions affecting their inventories. Our distributors are not subject to minimum purchase requirements and sales representatives and distributors can discontinue marketing any of our products at any time.

Our top ten customers, including distributors that resell to OEMs and merchant power supply manufacturers, accounted for 62%, 58% and 69% of our net revenues for 2007, 2006 and 2005, respectively. For 2007 and 2006, one distributor, Avnet, accounted for approximately 23% of our net revenues in each year. In 2005, two distributors, Memec Electronic Components (since acquired by Avnet) and Synnex Technologies accounted for 19% and 18% of our net revenues, respectively. In April 2006, we terminated our distributor relationship with Synnex Technologies. We have replaced this relationship with other distribution relationships, and we do not believe that the termination has had or will have a material impact on our business. No other customers accounted for more than 10% of net revenues during 2007, 2006 and 2005. In 2007, 2006 and 2005, sales to customers in the United States accounted for approximately 4%, 6% and 6%, respectively, of our net revenues. See Note 2, “Summary of Significant Accounting Policies,” in our notes to consolidated financial statements regarding sales to customers located in foreign countries. See our consolidated financial statements regarding total revenues and profit or loss for the last three fiscal years.

We are subject to certain risks stemming from the fact that much of our manufacturing, and most of our customers, are located in foreign jurisdictions. Risks related to our foreign operations are set forth in Item 1A of this Annual Report on Form 10-K, and include: potential weaker intellectual property rights under foreign laws; the burden of complying with foreign laws; and foreign-currency exchange risk.

Backlog

Our sales are primarily made pursuant to standard purchase orders. The quantity of products purchased by our customers as well as shipment schedules are subject to revisions that reflect changes in both the customers’ requirements and in manufacturing availability. The semiconductor industry is characterized by short lead-time orders and quick delivery schedules. In light of industry practice and experience, we do not believe that backlog at any given time is a meaningful indicator of our ability to achieve any particular level of revenue or financial performance.

Technology

- *High-Voltage Transistor Structure and Process Technology*—We have developed a patented silicon technology that uses a proprietary high-voltage MOS transistor structure and fabrication process. This technology enables us to integrate high-voltage n-channel transistors and industry-standard CMOS and bipolar control circuitry on the same monolithic IC. Both the IC device structure and the wafer fabrication process contribute to the cost-effectiveness of our high-voltage technology. In 2000, we introduced an improved high-voltage technology that further reduced the silicon area of our devices by using dual-conduction layers. In 2004, we made additional improvements to our technology to further shrink the silicon area of our ICs. Our high-voltage ICs are implemented on low-cost silicon wafers using standard 5 V CMOS silicon processing techniques with a relatively large feature size of between 1.5 and 3 microns.
- *IC Design and System Technology*—Our IC designs combine complex control circuits and high-voltage transistors on the same monolithic IC. Our IC design technology takes advantage of our high-voltage process to minimize the die size of both the high-voltage device and control circuits and improve the

performance of our ICs versus competing integrated technologies. We have also developed extensive expertise in the design of switching power supplies, resulting in innovative circuit topologies and design techniques that reduce component count and system cost, increase system performance, and improve energy efficiency compared to alternative approaches.

Research and Development

Our research and development efforts are focused on improving our high-voltage device structures, wafer fabrication processes, analog circuit designs and system-level architectures. We seek to introduce new products to expand our addressable markets, further reduce the costs of our products, and improve the cost-effectiveness and functionality of our customers' power supplies. We have assembled a team of highly skilled engineers to meet our research and development goals. These engineers have expertise in high-voltage device structure and process technology, analog design, and power supply system architecture. In December 2007 we augmented our research and development engineering team through the acquisition of Potentia Semiconductor Corporation, or Potentia, an early-stage developer of power-conversion ICs for high-power AC-DC power supplies. Potentia's engineering team, based in Ottawa, Canada, will form the core of a new analog design group for Power Integrations focused primarily on high-power applications with the potential to expand our addressable markets.

In 2007, 2006 and 2005, we incurred costs of $25.2 million, $24.4 million and $17.1 million, respectively, on research and development efforts, including expenses related to stock-based compensation. We expect to continue to invest significant funds in research and development activities.

Intellectual Property and Other Proprietary Rights

We use a combination of patents, trademarks, copyrights, trade secrets and confidentiality procedures to protect our intellectual property rights. As of December 31, 2007, we held 197 U.S. patents and had generally filed for or received foreign patent protection on these patents resulting in 90 foreign patents. The U.S. patents have expiration dates ranging from 2009 to 2026. We also hold trademarks in the U.S. and various other countries including Taiwan, Korea, Hong Kong, China, Europe and Japan.

We regard as proprietary certain equipment, processes, information and knowledge that we have developed and used in the design and manufacture of our products. Our trade secrets include a high-volume production process that produces our patented high-voltage ICs. We attempt to protect our trade secrets and other proprietary information through non-disclosure agreements, proprietary information agreements with employees and consultants and other security measures.

We granted a perpetual, non-transferable license to Matsushita Electric Industrial Co, Ltd., or Matsushita, or MEI, to use our semiconductor patents and other intellectual property for our current high-voltage technology under a Technology License Agreement. This license allows Matsushita to manufacture and design products for internal use and for sale or distribution to other Japanese companies and their subsidiaries in Asia. In exchange for its license rights, Matsushita has paid and will continue to pay royalties on products using the licensed technology during fixed periods.

The Technology License Agreement with Matsushita expired in June 2005 and has not been renewed. As a result, Matsushita's right to use our technology does not include technology developed after June 2005. Matsushita may continue to sell products based on technology covered by the license agreement prior to its expiration, and will continue to pay us royalties on the sale of these products through June 2009. Matsushita may sell products based on technology covered by the Technology License Agreement without payment of royalties after June 2009.

Our long-lived assets consist of property and equipment and intangible assets. Our intangible assets are comprised of licenses, patents, goodwill and customer relationships. Our intangible assets are located in the United States and Canada and are split 79% and 21%, respectively. See Note 2, "Summary of Significant Accounting

Policies," in our notes to consolidated financial statements regarding total intangible assets and property and equipment located in foreign countries.

Manufacturing

To manufacture our wafers, we contract with four foundries: (1) OKI Electric Industry, or OKI, (2) Seiko Epson Corporation or Epson, (3) XFAB Dresden GmbH & Co KG, or XFAB, (a wholly owned subsidiary of X-FAB Semiconductor Foundries AG), formerly ZFoundry and (4) Matsushita. These contractors manufacture our wafers at foundries located in Japan and Germany. Our products are assembled and packaged by independent subcontractors in China, Malaysia, Thailand and the Philippines. We perform testing at our facility in San Jose, California, and through our packaging subcontractors in Asia. Our fabless manufacturing model enables us to focus on our engineering and design strengths, minimize fixed costs on capital expenditures and still have access to high-volume manufacturing capacity. Our products do not require leading-edge process geometries for them to be cost-effective, and thus we can use our foundries' older, low-cost facilities for wafer manufacturing. However, because of our highly sensitive process, we must interact closely with our foundries to achieve satisfactory yields. Although we generally utilize standard IC packages for assembly, some materials and aspects of assembly are specific to our products. We require our assembly manufacturers to use a high-voltage molding compound which is more difficult to process than industry standard molding compounds. Until recently, this molding compound was procured from only one supplier. In December 2006, another high-voltage mold compound from a different supplier was qualified for use in manufacturing our products, allowing our manufacturers to source material from both suppliers. We will continue to investigate the use of alternative high-voltage molding compounds so that our assembly manufacturers have competitive sources of material. We will remain heavily involved with our contractors on an active engineering basis to maintain and improve our manufacturing processes.

Our wafer supply agreements with MEI, OKI, Epson and XFAB expire in June 2010, April 2008, December 2010 and December 2009, respectively. Under the terms of our agreement with MEI, we establish, by mutual agreement, minimum production capacity to be made available by MEI for the production of our wafers, and we supply MEI with monthly orders and rolling six-month forecasts on a monthly basis. We also establish pricing by good faith arrangements, subject to our right to most-favored pricing. Under the terms of the OKI agreement, OKI has agreed to reserve a specified amount of production capacity and to sell wafers to us at fixed prices,

which are subject to periodic review jointly by OKI and us. Our agreements with both MEI and OKI provide for the purchase of wafers in Japanese yen. The two agreements allow for mutual sharing of the impact of the exchange rate fluctuation between the Japanese yen and the U.S. dollar. Under the terms of the Epson agreement, Epson has agreed to reserve a specified amount of production capacity and to sell wafers to us at fixed prices, which are subject to periodic review jointly by Epson and us. The agreement with Epson also requires us to supply Epson with rolling six-month forecasts on a monthly basis. Our agreement with Epson provides for the purchase of wafers in U.S. dollars, however, we do share the impact of the exchange rate fluctuation between the Japanese yen and the U.S. dollar. Under the terms of the XFAB agreement, XFAB has agreed to reserve a specified amount of production capacity and to sell wafers to us at fixed prices, which are subject to periodic review jointly by XFAB and us. The agreement with XFAB also requires us to supply XFAB with rolling six-month forecasts on a monthly basis. Our purchases of wafers from XFAB are denominated in U.S. dollars.

Although certain aspects of our relationships with MEI, OKI, Epson and XFAB are contractual, some important aspects of these relationships are not written in binding contracts and depend on the suppliers' continued cooperation. We cannot assure that we will continue to work successfully with MEI, OKI, Epson or XFAB in the future, that they will continue to provide us with sufficient capacity at their foundries to meet our needs, or that any of them will not seek an early termination of their wafer supply agreement with us. Our operating results could suffer in the event of a supply disruption with OKI, MEI, Epson or XFAB if we were unable to quickly qualify alternative manufacturing sources for existing or new products or if these sources were unable to produce wafers with acceptable manufacturing yields.

We typically receive shipments from our foundries approximately four to six weeks after placing orders, and lead times for new products can be substantially longer. To provide sufficient time for assembly, testing and finishing, we typically need to receive wafers four to six weeks before the desired ship date to our customers. As a result of these factors and the fact that customers' orders can be placed with little advance notice, we have only a limited ability to react to fluctuations in demand for our products. We carry a substantial amount of wafer and finished goods inventory to help offset these risks and to better serve our markets and meet customer demand.

Competition

Competing alternatives to our high-voltage ICs include other integrated and hybrid (i.e., single-package) products from companies such as Fairchild Semiconductor, STMicroelectronics, Infineon, ON Semiconductor and Sanken Electric Company, as well as discrete components such as PWM controllers and high-voltage bipolar transistors and MOSFETs, which are produced by a large number of vendors. For some applications, line-frequency transformers are also a competing alternative to designs utilizing our ICs.

We have historically observed highly competitive pricing for discrete components and competing integrated/hybrid products. While the pricing of our ICs is an important factor considered by our customers, we also compete against alternative products based on a variety of other factors. Most importantly, the highly integrated nature of our ICs enables power supply designs that utilize fewer total components than comparable discrete designs or designs using other integrated/hybrid products. This reduced component count provides a cost savings on the bill of materials for a power supply, but also enables power supplies to be designed more quickly and manufactured more efficiently than competing designs.

In addition to enabling a lower component count, we also compete on the basis of product functionality such as safety features and energy-efficiency features, and on the basis of the technical support we provide to our customers. This support includes hands-on design assistance as well as a range of design tools and documentation such as software and reference designs. We also believe that our record of product quality and history of delivering products to our customers on a timely basis serve as additional competitive advantages.

On June 14, 2007, we announced the filing of a patent-infringement suit against one of our competitors, BCD Semiconductor Manufacturing Company Limited, a Chinese semiconductor company, and its U.S. affiliate,

BCD Semiconductor Corporation, to which we refer collectively as BCD. The suit alleges that certain power supply controller chips produced by BCD infringe upon certain of our patents. We are seeking damages as well as an injunction against the infringing products.

Warranty

We generally warrant that our products will substantially conform to the published specifications for 12 months from the date of shipment. Under the terms of our purchase orders, our liability is limited generally to either a credit equal to the purchase price or replacement of the defective part.

Employees

As of December 31, 2007, we employed 385 full time personnel, consisting of 96 in manufacturing, 100 in research and development, 155 in sales, marketing and applications support, and 34 in finance and administration.

Investor Information

We make available, free of charge, copies of our annual report on Form 10-K, quarterly reports on Form 10-Q, current reports on Form 8-K and amendments to those reports filed or furnished pursuant to Section 13(a) or 15(d) of the Exchange Act as soon as reasonably practicable after filing this material electronically or otherwise furnishing it to the SEC. You may obtain a free copy of these reports in the "investor info" section of our website,

www.powerint.com. Our website address is provided solely for informational purposes. We do not intend, by this reference, that our website should be deemed to be part of this Annual Report. The reports filed with the SEC are also available at *www.sec.gov.*

Our corporate governance guidelines, the charters of our board committees, and our code of business conduct and ethics, including code of ethics provisions that apply to our principal executive officer, principal financial officer, controller and senior financial officers, are available in the corporate governance section of our website at *www.powerint.com.* These items are also available in print to any stockholder who requests them by calling (408) 414-9200.

Executive Officers of the Registrant

As of February 29, 2008, our executive officers, who are appointed by and serve at the discretion of the board of directors, were as follows:

Name	Position With Power Integrations	Age
Balu Balakrishnan	President, Chief Executive Officer and Director	53
Douglas Bailey	Vice President, Marketing	41
Derek Bell	Vice President, Engineering	64
Bruce Renouard	Vice President, Worldwide Sales	47
John Tomlin	Vice President, Operations	60
Rafael Torres	Vice President, Finance and Administration, Chief Financial Officer and Secretary	40
Clifford J. Walker	Vice President, Corporate Development	56

Balu Balakrishnan has served as president and chief executive officer and as a director of Power Integrations since January 2002. He served as president and chief operating officer from April 2001 to January 2002. From January 2000 to April 2001, he was vice president of engineering and strategic marketing. From September 1997 to January 2000, he was vice president of engineering and new business development. From September 1994 to September 1997, Mr. Balakrishnan served as vice president of engineering and marketing. Prior to joining Power Integrations in 1989, Mr. Balakrishnan was employed by National Semiconductor Corporation.

Douglas Bailey has served as our vice president of marketing since November 2004. From March 2001 to April 2004, he served as vice president of marketing at ChipX, a structured ASIC company. His earlier experience includes serving as business management and marketing consultant for Sapiential Prime, Inc., director of sales and business unit manager for 8x8, Inc., and serving in application engineering management for IIT, Inc. and design engineering roles with LSI Logic, Inmos, Ltd. and Marconi.

Derek Bell has served as our vice president of engineering and technology since April 2001. Previously Mr. Bell was the chief operations officer at Palmchip Corporation, an integration and software service company from August 2000 to January 2001. Mr. Bell was vice president of engineering for the professional services group at Synopsys, Inc. an electronic design automation company, during 1999 and 2000, vice president of strategic alliances at Cirrus Logic, Inc., a semiconductor company, from 1996 to 1999, vice president and general manager of the application specific product group at National Semiconductor Corporation, Inc. a semiconductor company, from 1995 to 1996 and served as president and chief executive officer of NovaSensor, a manufacturer of silicon sensors from 1990 to 1994. He also held various senior management positions at Signetics, a semiconductor company, from 1972 to 1990, most recently as group vice president.

Bruce Renouard has served as our vice president, worldwide sales since February 2002. Mr. Renouard joined our company in January 2002 as a member of the sales organization. From August 1999 to August 2001, he served as vice president, worldwide sales of Zoran Corporation, a provider of digital solutions in the multimedia and consumer electronics markets. Mr. Renouard held the position of director, worldwide market development from

June 1997 to August 1999 for IDT/Centaur, an X 86 processor company. From January 1995 to June 1997, he served as national distribution sales manager for Cyrix Corp, a company specializing in Intel compatible processors.

John Tomlin has served as our vice president, operations since October 2001. From 1981 to 2001, Mr. Tomlin served in a variety of senior management positions in operations, service, logistics and marketing, most recently as vice president of worldwide operations at Quantum Corporation, a computer storage company.

Rafael Torres has served as our vice president, finance and administration, chief financial officer and secretary since July 2006. From November 2000 to July 2006, Mr. Torres served as chief financial officer of PLX Technology, Inc., a leading supplier of PCI Express and other standard input/output interconnect silicon for the communications, server, storage, embedded-control and consumer industries. From May 1999 to November 2000, he held a senior management position at PLX Technology, Inc. Prior to joining PLX, he served in financial management roles at OnCommand Corporation, a provider of on demand video services, and at Silicon Valley Group, a semiconductor equipment company. Mr. Torres is a Certified Public Accountant, and spent three years working in public accounting to obtain his certification.

Clifford J. Walker has served as our vice president, corporate development since June 1995. From September 1994 to June 1995, Mr. Walker served as vice president of Reach Software Corporation, a software company. From December 1993 to September 1994, Mr. Walker served as president of Morgan Walker International, a consulting company.

As of February 29, 2008, members of the board of directors were as follows:

Name	Position With Power Integrations	Age
Balu Balakrishnan	President, Chief Executive Officer and Director	53
Alan D. Bickell (2)	Director	71
Balakrishnan S. Iyer (2)(3)	Director	51
R. Scott Brown (1)	Director	66
Dr. James Fiebiger (2)(3)	Director	66
Steven J. Sharp (1)(3)	Director and Chairman of the Board	66
Nicholas E. Brathwaite (3)	Director	49
E. Floyd Kvamme (1)	Director	70

XIV. [Table of Contents]

(1) Member of the compensation committee
(2) Member of the audit committee
(3) Member of the nominating and governance committee

Balu Balakrishnan. Please refer to Mr. Balakrishnan's biography provided above.

Alan D. Bickell has served as a member of the board of directors since April 1999. Mr. Bickell spent more than 30 years with Hewlett-Packard Company, a computer-hardware company, serving as corporate senior vice president and managing director of geographic operations from 1992 until his retirement in 1996. Mr. Bickell serves on the board of directors of the Peking University Educational Foundation (USA).

Balakrishnan S. Iyer has served as a member of the board of directors since February 2004. From October 1998 to June 2003, Mr. Iyer served as senior vice president and chief financial officer for Conexant Systems, Inc., a designer, developer and seller of semiconductor systems solutions for communications applications. From January 1997 to September 1998, Mr. Iyer served as senior vice president and chief financial officer for VLSI Technology, Inc., a semiconductor company. Mr. Iyer also serves on the board of directors of Conexant Systems, Inc., a semiconductor system solutions company, Invitrogen Corporation, a life-science technology company, Qlogic

Corporation, a storage networking solutions company, Skyworks Solutions, Inc., a wireless semiconductor company, and IHS Inc., a global provider of technical information, decision-support tools and related services.

R. Scott Brown has served as member of the board of directors since July 1999. Mr. Brown has been retired since May 1, 1999. From 1985 to May 1999, Mr. Brown served as senior vice president of worldwide sales and support for Xilinx, Inc., a designer and developer of complete programmable logic solutions for use by electronic equipment manufacturers.

Dr. James Fiebiger became a member of the board of directors in March 2006. Dr. Fiebiger is currently a consultant to the semiconductor and electronic design automation industries. From December 1999 to October 2004, he served as chairman and chief executive officer of Lovoltech Inc., a fabless semiconductor company. Dr. Fiebiger served as vice chairman of GateField Corporation, a fabless semiconductor company, from February 1999 until the company was sold to Actel Corporation in November 2000. He served as GateField Corporation's president and chief executive officer from June 1996 until February 1999. From October 1993 to June 1996, he was chairman and managing director of Thunderbird Technologies, Inc., a semiconductor technology licensing company. From December 1987 to September 1993 he was president and chief operating officer at VLSI Technology, Inc., a semiconductor company. From August 1981 to August 1985 he was senior corporate vice president and assistant general manager of Motorola, Inc. Semiconductor Products Sector, the semiconductor business of Motorola, a wireless and broadband communications company. Dr. Fiebiger is a member of the board of directors of Qlogic Corporation, an electronics company, Mentor Graphics Corporation, an electronic design automation company, Actel Corporation, a semiconductor company, and Pixelworks, Inc., a fabless semiconductor company.

Steven J. Sharp has served as a member of the board of directors since our inception in 1988, and was elected non-executive chairman of the board in May 2006. Mr. Sharp has served as chairman of the board of directors of TriQuint Semiconductor, Inc., a manufacturer of electronic components for the communications industry, since 1992. He joined TriQuint Semiconductor, Inc. as president, chief executive officer and director in September 1991. Mr. Sharp served as president and chief executive officer of TriQuint Semiconductor, Inc. until July 2002. Prior to TriQuint Semiconductor, Inc., Mr. Sharp was associated with various venture capital and startup semiconductor firms. He helped start Crystal Semiconductor (now Cirrus Logic, Inc.), Gazelle Microcircuits, Inc. (now TriQuint Semiconductor, Inc.), Megatest Corporation (now Teradyne, Inc.) and Volterra Semiconductor Corporation. He also founded Silicon Architects (now Synopsys, Inc.). Mr. Sharp also serves on the boards of several private companies and charitable organizations.

XV. **Table of Contents**

Nicholas E. Brathwaite has served as a member of the board of directors since January 2000. Mr. Brathwaite is currently a partner with Bigwood Capital LLC, an investment firm. From 2000 to 2007 he served as chief technology officer of Flextronics International Ltd., an electronics company. In 1995 Flextronics International Ltd. acquired nChip, Inc., a multi-chip module company, where Mr. Brathwaite held the position of vice president and general manager of operations from 1992 to 1996. As a founding member of nChip, Inc., Mr. Brathwaite was responsible for all manufacturing and operational activities including wafer fabrication, wafer test, and module assembly. Before joining nChip, Inc., Mr. Brathwaite spent six years with Intel Corporation, a microprocessor company, in various engineering management positions in technology development and manufacturing. He is also a member of the board of directors of Photon Dynamics, Inc., a yield management solutions company for the flat panel display market.

E. Floyd Kvamme has served as a member of the board of directors since September 1989. Mr. Kvamme is partner emeritus of Kleiner Perkins Caufield & Byers, a venture capital company. Mr. Kvamme also serves on the boards of National Semiconductor Corporation, a semiconductor company, Harmonic Inc., a broadband optical networking and digital video systems company, and two private companies.

Item 1A. Risk Factors

In addition to the other information in this report, the following factors should be considered carefully in evaluating our business before purchasing shares of our stock.

Our quarterly operating results are volatile and difficult to predict. If we fail to meet the expectations of public market analysts or investors, the market price of our common stock may decrease significantly. Our net revenues and operating results have varied significantly in the past, are difficult to forecast, are subject to numerous factors both within and outside of our control, and may fluctuate significantly in the future. As a result, our quarterly operating results could fall below the expectations of public market analysts or investors. If that occurs, the price of our stock may decline.

Some of the factors that could affect our operating results include the following:

- the volume and timing of orders received from customers;
- competitive pressures on selling prices;
- the demand for our products declining in the major end markets we serve;
- the inability to adequately protect or enforce our intellectual property rights;
- the volume and timing of orders placed by us with our wafer foundries and assembly subcontractors;
- continued impact of recently enacted changes in securities laws and regulations, including potential risks resulting from our evaluation of internal controls under the Sarbanes-Oxley Act of 2002;
- expenses we incur related to stock-based compensation may increase if we are required to change our assumptions used in the Black-Scholes model;
- expenses we are required to incur (or choose to incur) in connection with our litigation against Fairchild Semiconductor, System General Corporation, and BCD;
- we are being audited by the Internal Revenue Service, which is asserting that we owe additional taxes relating to a number of items;
- fluctuations in exchange rates, particularly the exchange rate between the U.S. dollar and the Japanese yen;
- the licensing of our intellectual property to one of our wafer foundries;
- the lengthy timing of our sales cycle;

- the lengthy timing of our sales cycle;
- undetected defects and failures in meeting the exact specifications required by our products;
- reliance on international sales activities for a substantial portion of our net revenues;
- our ability to develop and bring to market new products and technologies on a timely basis;
- the ability of our products to penetrate additional markets;
- attraction and retention of qualified personnel in a competitive market;
- changes in environmental laws and regulations; and
- earthquakes, terrorists acts or other disasters.

We do not have long-term contracts with any of our customers and if they fail to place, or if they cancel or reschedule orders for our products, our operating results and our business may suffer. Our business is characterized by short-term customer orders and shipment schedules. Our customer base is highly concentrated, and a relatively small number of distributors, OEMs and merchant power supply manufacturers account for a significant portion of our revenues. Our top ten customers, including distributors, accounted for 62%, of our net revenues for the year ended December 31, 2007. The ordering patterns of some of our existing large customers have been unpredictable in

the past and we expect that customer-ordering patterns will continue to be unpredictable in the future. Not only does the volume of units ordered by particular customers vary substantially from period to period, but also purchase orders received from particular customers often vary substantially from early oral estimates provided by those customers for planning purposes. In addition, customer orders can be canceled or rescheduled without significant penalty to the customer. In the past we have experienced customer cancellations of substantial orders for reasons beyond our control, and significant cancellations could occur again at any time.

Intense competition in the high-voltage power supply industry may lead to a decrease in our average selling price and reduced sales volume of our products. The high-voltage power supply industry is intensely competitive and characterized by significant price sensitivity. Our products face competition from alternative technologies, such as linear transformers, discrete switcher power supplies, and other integrated and hybrid solutions. If the price of competing solutions decreases significantly, the cost effectiveness of our products will be adversely affected. If power requirements for applications in which our products are currently utilized go outside the cost-effective range of our products, some of these alternative technologies can be used more cost effectively. In addition, as our patents expire, our competitors could legally begin using the technology covered by the expired patents in their products, potentially increasing the performance of their products and/or decreasing the cost of their products, which may enable our competitors to compete more effectively. Our current patents may or may not inhibit our competitors from getting any benefit from an expired patent. One of our patents recently expired, and our remaining U.S. patents have expiration dates ranging from 2009 to 2026. We cannot assure that our products will continue to compete favorably or that we will be successful in the face of increasing competition from new products and enhancements introduced by existing competitors or new companies entering this market. We believe our failure to compete successfully in the high-voltage power supply business, including our ability to introduce new products with higher average selling prices, would materially harm our operating results.

If demand for our products declines in our major end markets, our net revenues will decrease. A limited number of applications of our products, such as cellphone chargers, standby power supplies for PCs, and power supplies for home appliances comprise a significant percentage of our net revenues. We expect that a significant level of our net revenues and operating results will continue to be dependent upon these applications in the near term. The demand for these products has been highly cyclical and has been impacted by economic downturns in the past. Any economic slowdown in the end markets that we serve could cause a slowdown in demand for our ICs. When our customers are not successful in maintaining high levels of demand for their products, their demand for our ICs decreases, which adversely affects our operating results. Any significant downturn in demand in these markets would cause our net revenues to decline and could cause the price of our stock to fall.

If we are unable to adequately protect or enforce our intellectual property rights, we could lose market share, incur costly litigation expenses, suffer incremental price erosion or lose valuable assets, any of which could harm our operations and negatively impact our profitability. Our success depends upon our ability to continue our technological innovation and protect our intellectual property, including patents, trade secrets, copyrights, and know-how. We are currently engaged in litigation to enforce our intellectual property rights, and associated expenses have been, and are expected to remain, material and have adversely affected our operating results. We cannot assure that the steps we have taken to protect our intellectual property will be adequate to prevent misappropriation, or that others will not develop competitive technologies or products. From time to time we have received, and we may receive in the future, communications alleging possible infringement of patents or other intellectual property rights of others. Costly litigation may be necessary to enforce our intellectual property rights or to defend us against claimed infringement. The failure to obtain necessary licenses and other rights, and/or litigation arising out of infringement claims could cause us to lose market share and harm our business.

As our patents expire, we will lose intellectual property protection previously afforded by those patents. Additionally, the laws of some foreign countries in which our technology is or may in the future be licensed may not protect our intellectual property rights to the same extent as the laws of the United States, thus limiting the protections applicable to our technology.

We depend on third-party suppliers to provide us with wafers for our products and if they fail to provide us sufficient wafers, our business may suffer. We have supply arrangements for the production of wafers with MEI, OKI, XFAB and Epson. Our contracts with these suppliers expire in June 2010, April 2008, December 2009 and December 2010, respectively. Although certain aspects of our relationships with MEI, OKI, XFAB and Epson are contractual, many important aspects of these relationships depend on their continued cooperation. We cannot assure that we will continue to work successfully with MEI, OKI, XFAB and Epson in the future, and that the wafer foundries' capacity will meet our needs. Additionally, one or more of these wafer foundries could seek an early termination of our wafer supply agreements. Any serious disruption in the supply of wafers from OKI, MEI, XFAB or Epson could harm our business. We estimate that it would take nine to 18 months from the time we identified an alternate manufacturing source to produce wafers with acceptable manufacturing yields in sufficient quantities to meet our needs.

Although we provide our foundries with rolling forecasts of our production requirements, their ability to provide wafers to us is ultimately limited by the available capacity of the wafer foundry. Any reduction in wafer foundry capacity available to us could require us to pay amounts in excess of contracted or anticipated amounts for wafer deliveries or require us to make other concessions to meet our customers' requirements. Any of these concessions could harm our business.

If our third-party suppliers and independent subcontractors do not produce our wafers and assemble our finished products at acceptable yields, our net revenues may decline. We depend on independent foundries to produce wafers, and independent subcontractors to assemble and test finished products, at acceptable yields and to deliver them to us in a timely manner. The failure of the foundries to supply us wafers at acceptable yields could prevent us from selling our products to our customers and would likely cause a decline in our net revenues. In addition, our IC assembly process requires our manufacturers to use a high-voltage molding compound that, until recently, has been available from only one supplier. In December 2006, an alternative molding compound, made by a different supplier was qualified for use on our highest volume package type. These compounds and their specified processing conditions require a more exacting level of process control than normally required for standard IC packages. Unavailability of assembly materials or problems with the assembly process can materially adversely affect yields, timely delivery and cost to manufacture. We may not be able to maintain acceptable yields in the future.

In addition, if prices for commodities used in our products increase significantly, raw materials costs of our suppliers would increase and could result in increased product costs our suppliers charge us. If we are not able to pass these costs on to our customers, this would have an adverse effect on our gross margins.

We are subject to stockholder litigation related to our internal investigation of our past practices related to stock option grants and the related restatement of our consolidated financial statements. In May 2006, we were informed that U.S. Department of Justice, or the DOJ, and the SEC, were conducting an investigation related to our internal investigation of our practices related to stock option grants. On November 2, 2007, we were informed by the staff of the SEC that they have terminated the investigation and are not recommending enforcement action be taken against us. In addition, three alleged shareholders of Power Integrations filed derivative complaints in the United States District Court for the Northern District of California, and two alleged shareholders filed derivative complaints in Superior Court of California, Santa Clara County, all purportedly on behalf of Power Integrations, against certain of our current and former executive officers and directors in connection with our option granting practices alleging, among other things, breaches of fiduciary duties and in the Federal court cases violations of Section 10(b) of the Securities Exchange Act of 1934. The shareholder derivative suits are discussed in more detail in Part I, Item 3 of this Form 10-K. The ongoing legal fees we are incurring in connection with these actions, or any attorneys' fees that we may be required to pay as a result of the derivative suits, would have an adverse effect on our operating results. Further, these actions have required a significant amount of our senior management's attention, and may continue to do so in the future, which detracts from their ability to manage our company's business.

Securities laws and regulations, including potential risk resulting from our evaluation of internal controls under the Sarbanes-Oxley Act of 2002, will continue to impact our results. Complying with the requirements of the Sarbanes-Oxley Act of 2002 and NASDAQ's conditions for continued listing have imposed significant legal and financial compliance costs, and are expected to continue to impose significant costs and management burden on us. These rules and regulations also may make it more expensive for us to obtain director and officer liability insurance, and we may be required to accept reduced coverage or incur substantially higher costs to obtain coverage. These rules and regulations could also make it more difficult for us to attract and retain qualified executive officers and members of our board of directors, particularly qualified members to serve on our audit committee.

Additionally, because these laws, regulations and standards promulgated by the Sarbanes-Oxley Act are subject to varying interpretations, their application in practice may evolve over time as new guidance becomes available. This evolution may result in continuing uncertainty regarding compliance matters and additional costs necessitated by ongoing revisions to our disclosure and governance practices.

Changes in assumptions used for our Statement of Financial Accounting Standards No. 123R, Share-Based Payment (SFAS 123R), calculation may increase our stock-based compensation expense. We determine the value of stock options granted using the Black-Scholes model. This model requires that we make certain assumptions, including an estimate of our expected life of stock options. Historically we have used the simplified method to calculate the expected life of stock option grants. This method assumes all options will be exercised midway between the vesting date and the contractual term of the option. In accordance with Staff Accounting Bulletin 107, or SAB 107, the simplified method could only be used until December 31, 2007. Beginning in January 2008 we are developing a new method based on our observations of employee option exercises. We will need to exercise judgment in deciding how best to stratify our employees into homogenous groups according to their exercise and post-vesting employment termination behaviors. In doing so, the life of stock option grants may change significantly, and therefore, may result in substantially higher stock-based compensation expenses. These changes in assumptions may have a material adverse effect on our operating results and could harm our stock price.

If we do not prevail in our litigation against Fairchild Semiconductor, System General, and BCD we will have expended significant financial resources, potentially without any benefit, and may also suffer the loss of proprietary rights. We are in patent litigation with each of Fairchild Semiconductor, System General Corp., and BCD Semiconductor Manufacturing Limited, and the outcome of this litigation is uncertain. While Fairchild has been found to willfully infringe four of our patents, and those patents have been found valid by a jury, there can be no assurance that we will be successful in obtaining financial damages or an injunction against the infringing

products. In addition, there is no assurance that we will be successful in obtaining financial damages or an injunction against all System General products or BCD products that infringe our patents. We have incurred, and expect to continue to incur, significant legal costs in conducting these lawsuits. Thus, even if we are successful in these lawsuits, the benefits of this success may fail to outweigh the significant legal costs we will have incurred.

We are being audited by the Internal Revenue Service which is asserting that we owe additional taxes relating to a number of items, and if we are not successful in defending our position we may be obligated to pay additional taxes, as well as penalties and interest, and may also have a higher effective income tax rate in the future. Our operations are subject to income and transaction taxes in the United States and in multiple foreign jurisdictions and to review or audit by the IRS and state, local and foreign tax authorities. In connection with an IRS audit of our United States Federal income tax returns for fiscal years 2002 and 2003, the IRS is asserting that we owe additional taxes relating to a number of items, the most significant of which is our research and development cost sharing arrangements with one of our subsidiaries. We disagree with the IRS's position; however, if we are not successful in defending our position, we could be required to pay additional taxes, penalties and interest for 2002 and 2003, as well as for subsequent years that are not currently under audit. Resolution of this matter could take considerable time, possibly years.

We believe the IRS's position with respect to certain items for which it has proposed adjustments is inconsistent with applicable tax laws, and that we have meritorious defenses to our position with respect to these proposed adjustments. Accordingly, we intend to continue to challenge the IRS's position on these matters vigorously. While we believe the IRS's asserted position on these matters is not supported by applicable law, we may be required to make additional payments in order to resolve these matters. If the IRS determines that we owe additional taxes for these matters, our results of operations and financial condition would be materially and adversely affected.

Fluctuations in exchange rates, particularly the exchange rate between the U.S. dollar and the Japanese yen, may impact our gross margin. The contract prices to purchase wafers from MEI and OKI are denominated in Japanese yen. The agreements with these vendors allow for mutual sharing of the impact of the exchange rate fluctuation between Japanese yen and the U.S. dollar. Nevertheless, changes in the exchange rate between the U.S. dollar and the Japanese yen could subject our gross profit and operating results to the potential for material fluctuations.

Matsushita has licenses to our technology, which it may use to our detriment. Pursuant to a Technology Agreement with Matsushita, which expired in June 2005, Matsushita has the perpetual right to manufacture and sell products that incorporate our technology to Japanese companies worldwide and to subsidiaries of Japanese companies located in Asia. Matsushita does not have rights to utilize technology developed by us after June 2005, when the agreement expired. According to the expired Technology Agreement, we will continue to receive royalties on Matsushita's sales through June 2009 at a reduced rate. Royalty revenues were less than 1% of total net revenues in each of the twelve months ended December 31, 2007 and 2006. However, these royalties are substantially lower than the gross profit we receive on direct sales, and we cannot assure that Matsushita will not use the technology rights to continue to develop and market competing products.

Because the sales cycle for our products can be lengthy, we may incur substantial expenses before we generate significant revenues, if any. Our products are generally incorporated into a customer's products at the design stage. However, customer decisions to use our products, commonly referred to as design wins, can often require us to expend significant research and development and sales and marketing resources without any assurance of success. These significant research and development and sales and marketing resources often precede volume sales, if any, by a year or more. The value of any design win will largely depend upon the commercial success of the customer's product. We cannot assure that we will continue to achieve design wins or that any design win will result in future revenues. If a customer decides at the design stage not to incorporate our products into its product, we may not have another opportunity for a design win with respect to that product for many months or years.

XX. **Table of Contents**

Our products must meet exacting specifications, and undetected defects and failures may occur which may cause customers to return or stop buying our products. Our customers generally establish demanding specifications for quality, performance and reliability, and our products must meet these specifications. ICs as complex as those we sell often encounter development delays and may contain undetected defects or failures when first introduced or after commencement of commercial shipments. We have from time to time in the past experienced product quality, performance or reliability problems. If defects and failures occur in our products, we could experience lost revenue, increased costs, including warranty expense and costs associated with customer support and customer expenses, delays in or cancellations or rescheduling of orders or shipments and product returns or discounts, any of which would harm our operating results.

Our international sales activities account for a substantial portion of our net revenues, which subjects us to substantial risks. Sales to customers outside of the Americas account for, and have accounted for a large portion of our net revenues, including approximately 95% of our net revenues for the year ended December 31, 2007, and 93% for each of the years ended December 31, 2006 and 2005. If our international sales declined and we were unable to increase domestic sales, our revenues would decline and our operating results would be harmed. International sales involve a number of risks to us, including:

- potential insolvency of international distributors and representatives;
- reduced protection for intellectual property rights in some countries;
- the impact of recessionary environments in economies outside the United States;
- tariffs and other trade barriers and restrictions;
- the burdens of complying with a variety of foreign and applicable U.S. Federal and state laws; and
- foreign-currency exchange risk.

Our failure to adequately address these risks could reduce our international sales and materially adversely affect our operating results. Furthermore, because substantially all of our foreign sales are denominated in U.S. dollars, increases in the value of the dollar cause the price of our products in foreign markets to rise, making our products more expensive relative to competing products priced in local currencies.

If our efforts to enhance existing products and introduce new products are not successful, we may not be able to generate demand for our products. Our success depends in significant part upon our ability to develop new ICs for high-voltage power conversion for existing and new markets, to introduce these products in a timely manner and to have these products selected for design into products of leading manufacturers. New product introduction schedules are subject to the risks and uncertainties that typically accompany development and delivery of complex technologies to the market place, including product development delays and defects. If we fail to develop and sell new products in a timely manner, our net revenues could decline.

In addition, we cannot be sure that we will be able to adjust to changing market demands as quickly and cost-effectively as necessary to compete successfully. Furthermore, we cannot assure that we will be able to introduce new products in a timely and cost-effective manner or in sufficient quantities to meet customer demand or that these products will achieve market acceptance. Our failure, or our customers' failure, to develop and introduce new products successfully and in a timely manner would harm our business. In addition, customers may defer or return orders for existing products in response to the introduction of new products. Although we maintain reserves for potential customer returns, we cannot assure that these reserves will be adequate.

If our products do not penetrate additional markets, our business will not grow as we expect. We believe that our future success depends in part upon our ability to penetrate additional markets for our products. We cannot assure that we will be able to overcome the marketing or technological challenges necessary to penetrate additional markets. To the extent that a competitor penetrates additional markets before we do, or takes market share from us in our existing markets, our net revenues and financial condition could be materially adversely affected.

We must attract and retain qualified personnel to be successful and competition for qualified personnel is intense in our market. Our success depends to a significant extent upon the continued service of our executive officers and other key management and technical personnel, and on our ability to continue to attract, retain and motivate qualified personnel, such as experienced analog design engineers and systems applications engineers. The competition for these employees is intense, particularly in Silicon Valley. The loss of the services of one or more of our engineers, executive officers or other key personnel could harm our business. In addition, if one or more of these individuals leaves our employ, and we are unable to quickly and efficiently replace those individuals with qualified personnel who can smoothly transition into their new roles, our business may suffer. We do not have long-term employment contracts with, and we do not have in place key person life insurance policies on, any of our employees.

Changes in environmental laws and regulations may increase our costs related to obsolete products in our existing inventory. Changing environmental regulations and the timetable to implement them continue to impact our customers' demand for our products. As a result there could be an increase in our inventory obsolescence costs for products manufactured prior to our customers' adoption of new regulations. Currently we have limited visibility into

our customers' strategies to implement these changing environmental regulations into their business. The inability to accurately determine our customers' strategies could increase our inventory costs related to obsolescence.

In the event of an earthquake, terrorist act or other disaster, our operations may be interrupted and our business would be harmed. Our principal executive offices and operating facilities situated near San Francisco, California, and most of our major suppliers, which are wafer foundries and assembly houses, are located in areas that have been subject to severe earthquakes. Many of our suppliers are also susceptible to other disasters such as tropical storms, typhoons or tsunamis. In the event of a disaster, we or one or more of our major suppliers may be temporarily unable to continue operations and may suffer significant property damage. Any interruption in our ability or that of our major suppliers to continue operations at our facilities could delay the development and shipment of our products.

Like other U.S. companies, our business and operating results are subject to uncertainties arising out of economic consequences of current and potential military actions or terrorist activities and associated political instability, and the impact of heightened security concerns on domestic and international travel and commerce. These uncertainties could also lead to delays or cancellations of customer orders, a general decrease in corporate spending or our inability to effectively market and sell our products. Any of these results could substantially harm our business and results of operations, causing a decrease in our revenues.

We have adopted anti-takeover measures which may make it more difficult for a third party to acquire us. Our board of directors may issue up to 2,925,000 shares of preferred stock and determine the price, rights, preferences and privileges of those preferred shares without any further vote or action by the stockholders. The rights of the holders of common stock will be subject to, and may be adversely affected by, the rights of the holders of any preferred stock that may be issued in the future. The issuance of shares of preferred stock, while potentially providing flexibility in connection with possible acquisitions and for other corporate purposes, could make it more difficult for a third party to acquire a majority of our outstanding voting stock. We have no present intention to issue shares of preferred stock.

In addition, we have entered into a rights agreement, commonly referred to as a "poison pill," to guard against abusive hostile takeover tactics. Further, the anti-takeover provisions of Section 203 of the Delaware General Corporations Law apply to us. Our rights agreement and Section 203 of the Delaware General Corporations Law may discourage, delay or prevent a change in control of Power Integrations.

Item 1B. Unresolved Staff Comments.

Not applicable.

Item 2. Properties.

We own our principal executive, administrative, manufacturing and technical offices which are located in San Jose, California in a 118,000 square foot facility. In addition to our facility in San Jose, we also lease sales offices in various countries around the world to accommodate our sales force. We believe that our current facilities are sufficient for our company for the foreseeable future.

Item 3. Legal Proceedings.

On June 28, 2004, we filed a complaint for patent infringement in the U.S. District Court, Northern District of California, against System General Corporation (System General), a Taiwanese company, and its U.S. subsidiary. Our complaint alleges that certain integrated circuits produced by System General infringed and continue to infringe certain of our patents. We seek, among other things, an order enjoining System General from infringing our patents and an award for damages resulting from the alleged infringement. On June 10, 2005, in response to the initiation of the U.S. International Trade Commission ("ITC") investigation (discussed below), the District Court stayed all proceedings. Subsequent to the completion of the ITC proceedings, the District Court temporarily lifted the stay. On

December 6, 2006, System General filed a notice of appeal of the ITC decision as discussed below. In response, and by agreement of the parties, the District Court renewed the stay of proceedings pending the outcome of the Federal Circuit appeal of the ITC determination.

On May 9, 2005, we filed a Complaint with the ITC under section 337 of the Tariff Act of 1930, as amended, 19 U.S.C. section 1337. We filed a supplement to the complaint on May 24, 2005. We alleged infringement of our patents pertaining to pulse width modulation ("PWM") integrated circuit devices, which are used in power conversion applications such as power supplies for computer monitors. The Commission instituted an investigation on June 8, 2005 in response to our complaint. System General Corporation filed a response to the ITC complaint asserting that the patents-in-suit were invalid and not infringed. We subsequently and voluntarily narrowed the number of patents and claims in suit, which proceeded to a hearing. The hearing on the investigation was held before the Administrative Law Judge ("ALJ") from January 18 to January 24, 2006. Post-hearing briefs were submitted and briefing concluded February 24, 2006. The ALJ's initial determination issued on May 15, 2006. The ALJ found all remaining asserted claims valid and infringed, and recommended the exclusion of the infringing products as well as certain downstream products that contain the infringing products. After further briefing, on June 30, 2006 the Commission decided not to review the initial determination on liability, but did invite briefs on remedy, bonding and the public interest. On August 11, 2006 the Commission issued an order excluding from entry into the United States the infringing Systems General PWM chips, and any LCD computer monitors, AC printer adapters and sample/demonstration circuit boards containing an infringing Systems General chip. The U.S. Customs Service is authorized to enforce the exclusion order. On October 11, 2006, the presidential review period expired without any action form the President, and the ITC exclusion order is now in full effect. On December 6, 2006 System General filed a notice of appeal of the ITC decision. Briefing was completed on July 23, 2007, and oral argument was heard by the U.S. Court of Appeals for the Federal Circuit on November 9, 2007. On November 19, 2007, the Federal Circuit affirmed the ITC's findings in all respects. Because System General did not file a petition for rehearing or rehearing en banc or petition the Supreme Court for certiorari within the time required to do so, the ITC's decision is now final.

On October 20, 2004, we filed a complaint against Fairchild Semiconductor International, Inc. and Fairchild Semiconductor Corporation (referred to collectively as "Fairchild") in the United States District Court for the District of Delaware. In our complaint, we alleged that Fairchild has and is infringing four Power Integrations' patents pertaining to PWM integrated circuit devices. Fairchild denied infringement and asked for a declaration from the court that it does not infringe any Power Integration patent and that the patents are invalid. The Court held a claim construction hearing on February 2, 2006 and issued a claim construction order on March 31, 2006 which was favorable to us. The Court set a first trial on the issues of infringement, willfulness and damages for October 2, 2006. At the close of the first trial, on October 10, 2006, the jury returned a verdict in favor of us finding all asserted claims of all four patents-in-suit to be willfully infringed by Fairchild and awarding $33,981,781 in damages. Although the jury awarded damages, and we will request the damages to be enhanced

in view of the jury's finding on willfulness, at this stage of the proceedings we cannot state the amount, if any, which might ultimately be recovered by us from Fairchild, and no benefits have been recorded in our consolidated financial statements as a result of the damages award. Fairchild raised defenses contending that the asserted patents are invalid or unenforceable, and the court held a second trial on these issues beginning on September 17, 2007. On September 21, 2007, the jury returned a verdict in our favor, affirming the validity of the asserted claims of all four patents-in-suit. Fairchild submitted further materials on the issue of enforceability along with various other post-trial motions, and the Court will address those issues along with our motions seeking increased damages and attorneys fees, an accounting and interest on the damages award and a permanent injunction, in the coming months. Briefing on these various issues was completed on January 16, 2008, but the Court has not yet scheduled a hearing.

On April 11, 2006, Fairchild Semiconductor Corporation and Intersil Corporation filed a patent infringement lawsuit against us the U.S. District Court for the Eastern District of Texas. The complaint asserted that we infringed on an old Intersil patent that Fairchild recently secured exclusive rights to assert against us but Fairchild and Intersil

did not identify any specific products they believe infringe the patent. Fairchild and Intersil's lawsuit was flawed because both Fairchild and Intersil lacked standing to sue us and it was also duplicative of a portion of our suit against Fairchild in Delaware, and we therefore filed a motion addressing both issues. The Texas Court granted our motion to transfer the case to Delaware on March 6, 2007, and the case was transferred to Delaware and assigned to Judge Farnan, the presiding judge in the Fairchild case discussed above. We then renewed our motion to dismiss the case for lack of standing, the Court held a hearing on October 5, 2007, and the Court dismissed, without prejudice, Fairchild and Intersil's case against us on December 20, 2007. Fairchild and Intersil did not appeal the Court's dismissal within the time provided for such an appeal.

On June 14, 2007, we filed a complaint for patent infringement in the U.S. District Court, Northern District of California, against Shanghai SIM-BCD Semiconductor Manufacturing Limited, a Chinese company, and its U.S. sister corporation, BCD Semiconductor Corporation (referred to collectively as "BCD"). Our complaint alleged that certain integrated circuits produced by BCD infringe certain of our patents, seeking, among other things, an order enjoining BCD from infringing our patents and an award for damages resulting from the alleged infringement. We voluntarily dismissed the California case against BCD on October 15, 2007 and filed a substantially identical complaint against BCD in the United States District Court for the District of Delaware on October 15, 2007. BCD has not yet answered the complaint. On January 21, 2008, BCD moved to dismiss the Delaware action for lack of personal jurisdiction in favor of a declaratory judgment action it filed against us on the same patents in the U.S. District Court, Northern District of California, discussed in further detail below. Briefing on this motion is complete. On January 25, 2008, we moved for a preliminary injunction against further sales of the accused BCD products based on infringement of one of the three patents in suit. BCD's opposition to the motion is due on April 7, 2008, and our reply is due April 28, 2008. The Court has set a hearing for our motion for preliminary injunction and BCD's motion to dismiss on May 5, 2008.

On January 18, 2008, BCD filed a complaint in the U.S. District Court, Northern District of California seeking a declaratory judgment of non-infringement and invalidity with respect to the three patents we asserted against BCD in the Delaware action discussed above. We have not yet answered the complaint, but BCD has stated that it will dismiss the California case in favor of the Delaware action if it does not prevail in its motion to dismiss the Delaware action.

On April 25, 2006, Kimberly Quaco, an alleged shareholder, filed a derivative complaint in the United States District Court for the Northern District of California, purportedly on behalf of Power Integrations, against certain of Power Integrations' current and former executives and members of our board of directors relating to our historical stock option granting practices. On August 1, 2006, Kathryn L. Champlin, another alleged shareholder, filed a similar derivative complaint in the United States District Court for the Northern District of California purportedly on behalf of Power Integrations. On September 21, 2006, Christopher Deboskey, another alleged shareholder, filed a similar derivative suit in the United States District Court for the Northern District of California purportedly on behalf of Power Integrations. On November 30, 2006, Ms. Champlin voluntarily

dismissed her suit. On December 18, 2006, the Court appointed Ms. Quaco's counsel as lead counsel and ordered that another purported shareholder, Mr. Geoffrey Wren, be substituted in as lead plaintiff. On January 17, 2007, the plaintiffs filed their consolidated complaint. On August 3, 2007, plaintiffs filed an amended consolidated complaint. The amended consolidated complaint alleges, among other things, that the defendants breached their fiduciary duties by improperly backdating stock option grants in violation of Power Integrations' shareholder approved stock option plans, improperly recording and accounting for the backdated options, improperly taking tax deductions based on the backdated options, and disseminating false financial statements that improperly recorded the backdated option grants. The amended consolidated complaint asserts claims for, among other things, breach of fiduciary duty, unjust enrichment, and violations of Section 10(b) of the Securities Exchange Act of 1934. On January 30, 2008, the parties agreed to settle the dispute. The settlement is subject to court approval. On February 1, 2008, plaintiffs filed a motion for preliminary approval of the settlement, and a hearing was scheduled for March 24, 2008.

On May 26, 2006, Stanley Banko, an alleged shareholder, filed a derivative complaint in the Superior Court of California, Santa Clara County, purportedly on behalf of Power Integrations, against certain of our current and former executives and members of Power Integrations' board of directors relating to our historical stock option granting practices. On May 30, 2006, Joan Campbell, also an alleged shareholder, filed a derivative suit in the Superior Court of California, Santa Clara County, making the identical allegations asserted in the Banko lawsuit. On June 30, 2006, pursuant to a stipulation by the parties, the Court consolidated the two cases into a single proceeding and required plaintiffs to file an amended, consolidated complaint. Plaintiffs filed their consolidated complaint on August 14, 2006, in which plaintiffs named additional officers and former officers and KPMG LLP, Power Integrations' former auditor, as new defendants. The consolidated complaint alleges, among other things, that the defendants caused or allowed Power Integrations' executives to manipulate their stock option grant dates, that defendants improperly backdated stock option grants, and that costs associated with the stock option grants were not properly recorded in Power Integrations' financial statements. The complaint asserts claims for, among other things, insider trading, breach of fiduciary duty, gross mismanagement and unjust enrichment. On January 30, 2008, the parties agreed to settle the dispute. On February 28, 2008, the parties submitted a stipulation to the Court requesting that the action be stayed pending the final order approving the settlement and entry of the final order and judgment in the Quaco Action.

On May 23, 2006, the U.S. Attorney's Office for the Northern District of California, or the DOJ, issued a grand jury subpoena to us directing that we produce documents relating to the granting of stock options from 1995 through the present. Subsequently the government made a number of requests for us to voluntarily produce documents relating to, among other things, our stock option practices. The government also conducted voluntary interviews of certain current and former officers and employees. We cooperated fully with the DOJ. The SEC was also conducting an investigation, and on November 2, 2007, we were informed by the staff of the SEC that they have terminated the investigation and are not recommending enforcement action be taken against us.

The Internal Revenue Service, or IRS, is conducting an audit of our 2002 and 2003 tax returns. The IRS has issued a number of Notices of Proposed Adjustment to these returns. Among other things, the IRS has challenged several aspects of our research and development cost-sharing arrangement, which was put into place on November 1, 2003. While we have agreed to some of the adjustments proposed by the IRS, we dispute other proposed adjustments.

There can be no assurance that we will prevail in our litigation with System General, Fairchild or BCD. This litigation, whether or not determined in our favor or settled, will be costly and will divert the efforts and attention of our management and technical personnel from normal business operations, potentially causing a material adverse effect on our business, financial condition and operating results. In addition, we are unable to predict the outcome of the other legal proceedings and matters described above. Adverse determinations in litigation could result in monetary losses, the loss of our proprietary rights, subject us to significant liabilities, require us to seek licenses from third parties or prevent us from licensing our technology, any of which could have a material adverse effect on our business, financial condition and operating results.

Item 4. Submission of Matters to a Vote of Security Holders.

At the Annual Meeting of Stockholders of Power Integrations, Inc. held on November 7, 2007, the following proposals were adopted.

Proposal I—To elect the following persons as Class III directors to hold office for a three-year term and until their successors are elected and qualified:

	Voted For	Withheld	Broker Non-Votes
Alan D. Bickell	15,741,161	10,789,499	—

Balakrishnan S. Iyer	21,069,020	5,461,640	—

Power Integrations' other directors are R. Scott Brown, James Fiebiger and Steven J. Sharp (each of whose terms expire in 2008) and Balu Balakrishnan, Nicholas E. Brathwaite and E. Floyd Kvamme (each of whose terms expire in 2009).

Proposal II—To approve an amendment to Power Integrations' Restated Certificate of Incorporation to declassify the Board of Directors:

Voted For	Voted Against	Abstain	Broker Non-Votes
26,356,310	166,309	8,041	—

Proposal III—To approve the amendment and restatement of the Power Integrations, Inc. 1997 Stock Option Plan (to be renamed the Power Integrations, Inc. 2007 Equity Incentive Plan) primarily for the purpose of expanding the types of equity awards that may be granted under the plan:

Voted For	Voted Against	Abstain	Broker Non-Votes
13,629,469	10,700,035	27,205	2,173,951

Proposal IV—To ratify the selection by the Audit Committee of Deloitte & Touche LLP as the independent registered public accounting firm of Power Integrations, Inc. for the fiscal year ending December 31, 2007:

Voted For	Voted Against	Abstain	Broker Non-Votes
26,477,466	20,873	32,321	—

PART II

Item 5. Market for Registrant's Common Equity, Related Stockholder Matters and Issuer Purchases of Equity Securities.

Our common stock trades on the NASDAQ Global Market under the symbol "POWI". From December 19, 2006 to August 13, 2007 and from August 2, 2006 to October 30, 2006 our common stock traded on the Pink Sheets under the symbol "POWI.PK." The following table shows the high and low sales prices per share of our common stock as reported on the NASDAQ Global Market for the periods indicated during which our common stock traded on the NASDAQ Global Market. For the periods in which our common stock was traded on the Pink Sheets, the prices below reflect high and low bid quotations, which reflect inter-dealer prices, without retail mark-up, mark-down or commission and may not necessarily represent actual transactions:

	Price Range	
Year Ended December 31, 2007	High	Low
Fourth quarter	$34.52	$29.45
Third quarter	$31.20	$25.00
Second quarter	$30.20	$22.50
First quarter	$26.15	$20.50

Year Ended December 31, 2006	High	Low
Fourth quarter	$28.25	$18.28

Third quarter	$20.57	$13.71
Second quarter	$25.78	$15.00
First quarter	$28.27	$23.35

As of February 29, 2008, there were approximately 76 stockholders of record. Because brokers and other institutions hold many of our shares on behalf of stockholders, we are unable to estimate the total number of stockholders represented by these record holders.

We have not paid any cash dividends on our capital stock and do not anticipate paying any cash dividends in the foreseeable future.

XXVII. Table of Contents

Performance Graph (1)

The following graph shows the cumulative total stockholder return of an investment of $100 in cash on December 31, 2002, through December 31, 2007, for (a) our common stock, (b) The NASDAQ Composite Index and (c) The NASDAQ Electronic Components Index. Pursuant to applicable SEC rules, all values assume reinvestment of the full amount of all dividends, however no dividends have been declared on our common stock to date. The stockholder return shown on the graph below is not necessarily indicative of future performance, and we do not make or endorse any predictions as to future stockholder returns.

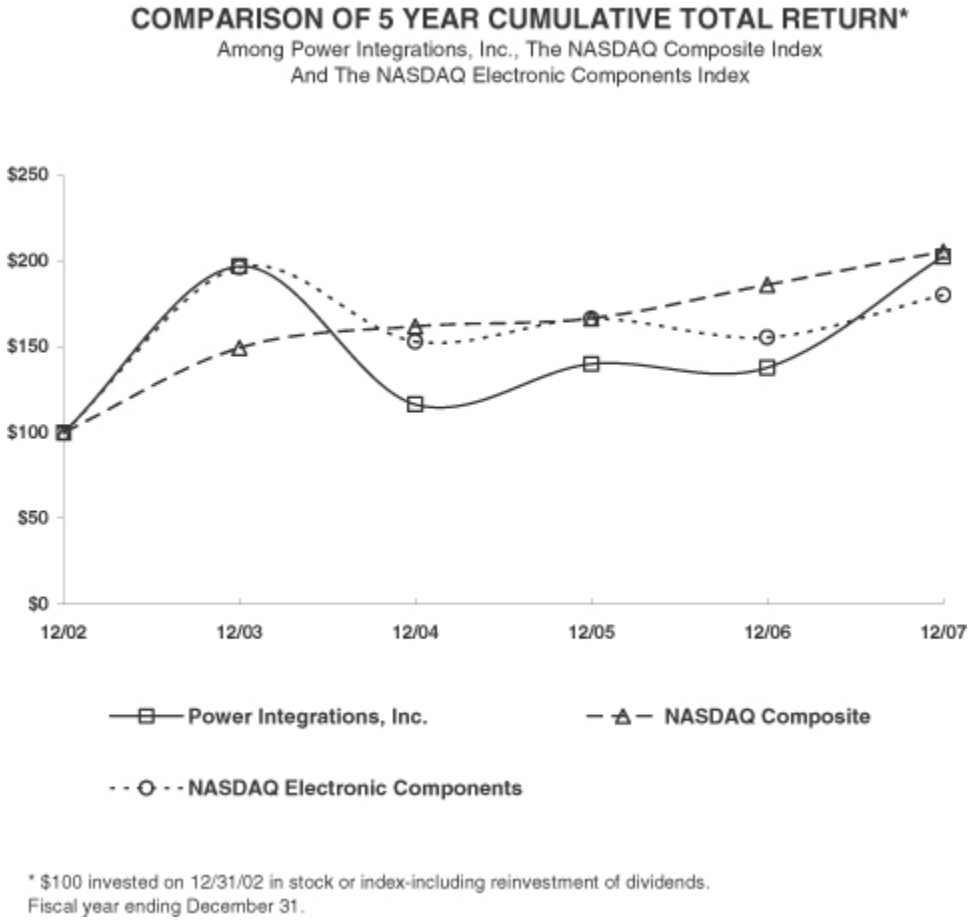

(1) This Section is not "soliciting material," is not deemed "filed" with the SEC and is not to be incorporated by reference in any filing of Power Integrations under the Securities Act of 1933, as amended, or the Securities Exchange Act of 1934, whether made before or after the date hereof and irrespective of any general incorporation language in any such filing.

Item 6. Selected Financial Data.

The following selected consolidated financial data should be read in conjunction with "Management's Discussion and Analysis of Financial Condition and Results of Operations" and the consolidated financial statements and the notes thereto included elsewhere in this Form 10-K to fully understand factors that may affect the comparability of the information presented below. We derived the selected consolidated balance sheet data as of December 31, 2007 and 2006 and the consolidated statements of income data for the years ended December 31, 2007, 2006 and 2005 from our audited consolidated financial statements, and accompanying notes, in this Annual Report on Form 10-K. The consolidated statements of income data for each of the years ended December 31, 2004 and 2003 and the consolidated balance sheet data as of December 31, 2005, 2004 and 2003 are derived from consolidated financial statements which are not included in this report. Our historical results are not necessarily indicative of results for any future period.

	Year Ended December 31,				
	2007	2006	2005	2004	2003
	(in thousands, except per share data)				
Consolidated Statements of Income:					
Net revenues	$191,043	$162,403	$143,071	$136,653	$125,682
Cost of revenues	87,558	73,794	72,979	71,856	63,496
Gross profit	103,485	88,609	70,092	64,797	62,186
Operating expenses:					
Research and development	25,176	24,415	17,111	15,440	20,107
Sales and marketing	26,940	25,712	18,314	16,070	17,166
General and administrative	24,249	34,648	15,665	7,969	10,868
In-process research and development	1,370	—	—	—	—
Total operating expenses	77,735	84,775	51,090	39,479	48,141
Income from operations	25,750	3,834	19,002	25,318	14,045
Other income:					
Other income, net	7,960	5,924	3,149	1,320	903
Insurance reimbursement	841	—	—	—	—
Total other income	8,801	5,924	3,149	1,320	903
Income before provision for income taxes	34,551	9,758	22,151	26,638	14,948
Provision for income taxes	7,927	333	6,453	6,138	3,511
Net income	$ 26,624	$ 9,425	$ 15,698	$ 20,500	$ 11,437

Earnings per share:					
Basic	$ 0.92	$ 0.32	$ 0.53	$ 0.67	$ 0.39
Diluted	$ 0.85	$ 0.31	$ 0.51	$ 0.64	$ 0.36
Shares used in per share calculation:					
Basic	28,969	29,059	29,568	30,802	29,473
Diluted	31,254	30,819	30,843	32,229	31,488

	December 31,				
	2007	2006	2005	2004	2003
			(in thousands)		
Consolidated Balance Sheet Data:					
Cash, cash equivalents and short-term investments.	$204,174	$127,443	$126,079	$108,645	$ 97,005
Working capital	$215,040	$133,627	$132,813	$127,424	$115,485
Total assets	$335,099	$260,859	$236,921	$241,016	$217,438
Long-term liabilities and capitalized lease obligations, net of current portion	$ 17,042	$ —	$ —	$ —	$ —
Stockholders' equity.	$289,490	$220,766	$209,359	$215,756	$194,554

Item 7. Management's Discussion and Analysis of Financial Condition and Results of Operations

The following discussion and analysis of our financial condition and results of our operations should be read in conjunction with the consolidated financial statements and the notes to those statements included elsewhere in this Annual Report on Form 10-K. This discussion contains forward-looking statements that involve risks and uncertainties. Our actual results could differ materially from those contained in these forward-looking statements due to a number of factors, including those discussed in Part I, Item 1A—"Risk Factors" and elsewhere in this report.

Business Overview

We design, develop, manufacture and market proprietary, high-voltage analog ICs for use primarily in electronic power supplies, also known as switched-mode power supplies or switchers. Our ICs are used in AC-DC and DC-DC power supplies in a wide variety of electronic products, primarily in the consumer, communications, computer and industrial electronics markets. Accelerating the penetration of our ICs into this addressable market is our primary strategic objective.

Our ICs are purchased primarily by merchant power supply manufacturers who sell power supplies to OEMs, and, in some cases, by OEMs who design and build their own power supplies. In 2007, approximately 64% of our net sales to these end customers were made through distributors of electronic components. Power supplies may be designed with our monolithic ICs, which combine a high-voltage transistor with low-voltage control circuitry, or with a number of competing alternatives. These alternatives include other monolithic and hybrid ICs, PWM controller ICs paired with discrete transistors, and legacy technologies that do not utilize ICs, such as line-frequency transformers and self-oscillating switchers using discrete components.

Our sales process involves significant effort to convince our customers to design their power supplies using our ICs as components. Competition for these "design wins" at our end customers is intense, as the power-supply industry is extremely price-sensitive. We attempt to differentiate our offerings from competing alternatives through innovation aimed at helping our customers minimize the total cost of their power supplies while meeting the performance specifications demanded by their end customers. Much of this innovation is embodied in the features and functionality of our ICs, as well as in various power-supply design techniques developed by us for use by our customers. Further, we attempt to minimize the cost of producing our ICs through continuous improvement of our proprietary manufacturing process as well as other manufacturing efficiencies.

We employ a variety of methods for marketing and selling our products in an effort to accelerate the penetration of our addressable markets. We employ a staff of sales personnel and field applications engineers around the world, and have increased the size of this staff considerably over the past several years. In order to assist our customers in designing power supplies with our ICs, we offer a wide range of technical documentation as well as design-support tools and services. These include PI Expert design software, which we offer free of charge, and our transformer sample service. We also continue to introduce more advanced products that make our solutions more cost-effective and easier for designers to use.

We believe that the increasing importance of energy-efficiency as a design criterion for power supplies could help accelerate the rate of adoption of our technology by the power-supply industry, and represents an important opportunity for us to increase the penetration rate of our products. This trend is predominantly the result of the emergence of energy-efficiency standards that encourage, or in some cases mandate, the design of more energy-efficient electronic products. Power supplies built with legacy technologies such as line-frequency transformers are often unable to meet these standards cost-effectively. Most notably, the California Energy Commission has introduced mandatory standards governing the energy efficiency of virtually all external power supplies; these standards became effective in 2007. These standards are scheduled to become effective on a nationwide basis in July 2008 as a result of the Energy Independence and Security Act of 2007.

Our net revenues were $191.0 million, $162.4 million and $143.1 million in 2007, 2006 and 2005, respectively. The growth of revenue in each of these years primarily reflects the increased penetration of our products into our addressable market. However, we believe that our revenue growth in all three years was negatively impacted by unfair competition from products that we believe infringed several of our patents, and that in the absence of the infringing products, our revenues would have grown more rapidly in each of those years. We have taken action against these products by undertaking litigation against three of our competitors, Fairchild Semiconductor, System General Corp., and BCD Semiconductor Manufacturing Limited, as described in Part I, Item 3 of this Annual Report on Form 10-K.

Our top ten customers, including distributors that resell to OEMs and merchant power supply manufacturers, accounted for 62%, 58% and 69% of our net revenues for 2007, 2006 and 2005, respectively. In 2007 and 2006 our top customer, a distributor, accounted for approximately 23% of our net revenues in each year. In 2005, our top two customers, both distributors, collectively accounted for 37% of our net revenues. In 2007, 2006 and 2005, international sales (meaning sales outside of North and South America) comprised 95%, 93% and 93%, respectively, of our net revenues.

Our gross profit, defined as net revenues less cost of revenues, was $103.5 million, or 54% of net revenues, in 2007, compared to $88.6 million, or 55% of net revenues, in 2006 and $70.1 million, or 49% of net revenues, in 2005. Because our industry is intensely price-sensitive, our gross margin, which is gross profit divided by net revenues, is subject to change based on the relative pricing of solutions that compete with ours. Also, because we purchase a large percentage of our wafers from foundries located in Japan, our gross margin is influenced by fluctuations in the exchange rate between the U.S. dollar and the Japanese yen. All else being equal, a 10% change in the value of the U.S. dollar compared to the Japanese yen would result in a corresponding change in our gross margin of approximately one percentage point.

In recent years we have employed a number of tactics in an effort to maintain or, when possible, improve our gross margin. These include reducing the cost of producing our ICs through the implementation of more advanced manufacturing processes, the migration of our testing operations to offshore sub-contractors, and the negotiation of more favorable prices from our suppliers. We also seek to increase the value of our products to our customers through the inclusion of more advanced features and functionality. Finally, we have made an effort to market our products to smaller, less price-sensitive customers. Through this combination of methods, we have generally succeeded in improving our gross margin in the recent past. Our gross margin may fluctuate in 2008 depending on a

variety of factors such as the intensity of competition, the cost of manufacturing our products, the mix of high- and low-volume orders comprising our revenue, and the exchange rate between the U.S. dollar and the Japanese yen.

Total operating expenses in 2007, 2006 and 2005 were $77.7 million, $84.8 million and $51.1 million, respectively. The decrease in operating expenses in 2007 compared to 2006 was driven primarily by a reduction in expenses stemming from the special investigation of our practices for granting stock options, and the related restatement of our historical financial statements. These expenses totaled approximately $5.4 million in 2007 and $13.7 million in 2006. The increase in operating expenses in 2007 and 2006 compared to 2005 was due primarily to the implementation of SFAS No. 123(R), which requires the recognition of expenses related to stock-based compensation. In addition, in 2007 we had a write off of in-process research and development of $1.4 million, related to our acquisition of Potentia. For 2008, we expect our operating expenses to decrease compared to 2007 due primarily to the conclusion of the special investigation and the related restatement of our financial statements.

Our quarterly and annual operating results are volatile and difficult to predict. Our business is characterized by short-term orders and short customer lead times, and a high percentage of our revenue comes from “turns business,” or orders booked and shipped within the same period. Customers typically can cancel or reschedule orders without significant penalty. We plan our production and inventory levels based on internal forecasts of customer demand, which is highly unpredictable and can fluctuate substantially. As a result, our quarterly and annual operating results may fluctuate significantly in the future.

Critical Accounting Policies and Estimates

The preparation of financial statements and related disclosures in conformity with accounting principles generally accepted in the United States of America requires management to make estimates and assumptions that affect the reported amounts of assets and liabilities and disclosures of contingent assets and liabilities at the date of the financial statements and the reported amounts of revenues and expenses during the reporting period. On an ongoing basis, we evaluate our estimates, including those listed below. We base our estimates on historical facts and various other assumptions that we believe to be reasonable at the time the estimates are made. Actual results could differ from those estimates.

Our critical accounting policies are as follows:

- revenue recognition;
- stock-based compensation;
- estimating sales returns and allowances;
- estimating distributor pricing credits;
- estimating allowance for doubtful accounts;
- estimating write-downs for excess and obsolete inventory;
- income taxes; and
- goodwill and intangible assets.

Our critical accounting policies are both important to the portrayal of our financial condition and results of operations, and require us to make judgments and estimates about matters that are inherently uncertain. A brief description of these critical accounting policies is set forth below. For more information regarding our accounting policies, see Note 2, “Summary of Significant Accounting Policies,” in our notes to consolidated financial statements.

Revenue recognition

Product revenues consist of sales to OEMs, merchant power supply manufacturers and distributors. Shipping terms to our international OEMs and merchant power supply manufacturers from our facility in California are "delivered at frontier," commonly referred to as DAF. As such, title to the product passes to the customer when the shipment reaches the destination country and revenue is recognized upon the arrival of our product in that country. Beginning in December 2005, shipping terms to our international OEMs and merchant power supply manufacturers shipped from our facilities outside of the United States are "EX Works" (EXW), meaning that title to the product transfers to our customer upon shipment from our foreign warehouses. Shipments to North and South American OEMs and merchant power supply manufacturers are "FOB-point of origin," meaning that revenue is recognized upon shipment, which is when title is passed to the customer.

Historically, between one-half and two-thirds of our total sales have been made to distributors pursuant to agreements that allow certain rights of return on our products held by these distributors. As a result, we defer the recognition of revenue and the costs of revenues derived from sales to distributors until such distributors resell our products to their customers. We determine the amounts to defer based on the level of actual inventory on hand at our distributors as well as inventory that is in transit to them. The gross profit that is deferred as a result of this policy is reflected as "deferred income on sales to distributors" in our consolidated balance sheets.

Stock-based compensation

We adopted SFAS No. 123(R), *Share-Based Payment*, effective January 1, 2006. Under the provisions of SFAS No. 123(R), we recognize the fair value of stock-based compensation in financial statements over the requisite service period of the individual grants, which generally equals a four year vesting period. We have elected the modified prospective transition method for adopting SFAS No. 123(R), under which the provisions of SFAS No. 123(R) apply to all awards granted or modified after the date of adoption. The unrecognized expense of awards not yet vested at the date of adoption is recognized in our financial statements in the periods after the date of adoption using the same value determined under the original provisions of SFAS No. 123, *Accounting for Stock-Based Compensation*. We recognize compensation expense for the stock option awards granted subsequent to December 31, 2005 on a straight-line basis over the requisite service period. We use estimates in determining the fair value of these awards. Changes in these estimates could result in changes to our compensation charges. In the fiscal year 2005, we elected to follow Accounting Principles Board Opinion (APB) No. 25, *Accounting for Stock Issued to Employees*, and related interpretations, in accounting for employee stock options rather than the alternative fair value method allowed for by SFAS No. 123. See Note 5, "Stockholders' Equity," in our notes to consolidated financial statements.

As discussed in our Annual Report on Form 10-K for the year ended December 31, 2005, a Special Committee of the board of directors conducted an internal investigation of our practices related to stock option grants to officers, directors and employees, and related matters, and concluded that, among other things, the recorded grant dates for certain option grants should not be relied upon. After receiving the Special Committee's conclusions and consistent with those conclusions, we reviewed stock option grants during the period from 1998 through June 2006, resulting in our recognizing additional stock-based compensation expense with respect to certain of these grants. Although we determined that the measurement dates for certain stock option grants differed from the recorded grant dates for such grants, in some instances we were only able to locate sufficient evidence to identify the measurement date described in APB 25, the first date on which both the number of shares that an individual employee was entitled to receive and the exercise price were known, within a range of possible dates. As a result, we developed a methodology to establish the revised measurement date primarily by using communication dates as our estimate of the first date on which both the number of shares that an individual employee was entitled to receive and the exercise price were known with finality. This methodology resulted in our incurring additional aggregate pre-tax APB 25 stock-based compensation charges relating to 2005 of $3.1 million. If we had used a variation of this methodology, using either the latest date ("latest date") an option in a group of options was recorded or the earliest date ("earliest date") a stock option agreement was returned to us from a group of options other than new hire non-officer employee options (and excluded outliers, consistent with the application of our methodology), the aggregate pre-tax APB stock-based compensation charges relating to 2005 would have been $2.8 million (latest date) and $3.2

million (earliest date). Please see our Annual Report on Form 10-K for the year ended December 31, 2005, for a full discussion of this methodology.

Estimating sales returns and allowances

Net revenue consists of product revenue reduced by estimated sales returns and allowances. To estimate sales returns and allowances, we analyze, both when we initially establish the reserve, and then each quarter when we review the adequacy of the reserve, the following factors: historical returns, current economic trends, levels of inventories of our products held by our distributor customers, and changes in customer demand and acceptance of our products. This reserve represents a reserve of the gross margin on estimated future returns and is reflected as a reduction to accounts receivable in the consolidated balance sheets. Increases to the reserve are recorded as a reduction to net revenue equal to the expected customer credit memo and a corresponding credit is made to cost of revenues equal to the estimated cost of the product to be returned. The net difference, or gross margin, is recorded as an addition to the reserve. Because the reserve for sales returns and allowances is based on our judgments and estimates, particularly as to future customer demand and level of acceptance of our products, our reserves may not be adequate to cover actual sales returns and other allowances. If our reserves are not adequate, our future net revenues and cost of revenues could be adversely affected.

Estimating distributor pricing credits

Historically, between one-half and two-thirds of our total sales have been made to distributors. Frequently, distributors need a cost lower than the standard distribution price to win business. After the distributor ships product to its customer under an approved transaction, the distributor submits a “ship and debit” claim to us to adjust its cost from the standard price to the approved lower price. After verification by us, a credit memo is issued to the distributor to adjust the sell-in price from the standard distribution price to the approved lower price. We maintain a reserve for these credits that appears as a reduction to accounts receivable in our consolidated balance sheets. Any increase in the reserve results in a corresponding reduction in our net revenues. To establish the adequacy of our reserves, we analyze historical ship and debit amounts and levels of inventory in the distributor channels. If our reserves are not adequate, our net revenues could be adversely affected.

From time to time we reduce our distribution list prices. We give our distributors protection against these price declines in the form of credits on products they hold in inventory. These credits are referred to as “price protection.” Since we do not recognize revenue until the distributor sells the product to its customers, we generally do not need to provide reserves for price protection. However, in rare instances we must consider price protection in the analysis of reserve requirements, as there may be a timing gap between a price decline and the issuance of price protection credits. If a price protection reserve is required, we will maintain a reserve for these credits that appears as a reduction to accounts receivable in our consolidated balance sheets. Any increase in the reserve results in a corresponding reduction in our net revenues. We analyze distribution price declines and levels of inventory in the distributor channels in determining the reserve levels required. If our reserves are not adequate, our net revenues could be adversely affected.

Estimating allowance for doubtful accounts

We maintain an allowance for losses we may incur as a result of our customers’ inability to make required payments. Any increase in the allowance for doubtful accounts results in a corresponding increase in our general and administrative expenses. In establishing this allowance, and in evaluating the adequacy of the allowance each quarter, we analyze historical bad debts, customer concentrations, customer credit-worthiness, current economic trends and changes in our customer payment terms. If the financial condition of one or more of our customers deteriorates, resulting in their inability to make payments, or if we otherwise underestimate the losses we incur as a result of our customers’ inability to pay us, we could be required to increase our allowance for doubtful accounts which could adversely affect our operating results.

Estimating write-downs for excess and obsolete inventory

When evaluating the adequacy of our valuation adjustments for excess and obsolete inventory, we identify excess and obsolete products and also analyze historical usage, forecasted production based on demand forecasts, current economic trends, and historical write-offs**.** This write-down is reflected as a reduction to inventory in the consolidated balance sheets, and an increase in cost of revenues. If actual market conditions are less favorable than our assumptions, we may be required to take additional write-downs, which could adversely impact our cost of revenues and operating results.

Income taxes

Income tax expense is an estimate of current income taxes payable or refundable in the current fiscal year based on reported income before income taxes. Deferred income taxes reflect the effect of temporary differences and carry-forwards that are recognized for financial reporting and income tax purposes. These deferred taxes are measured by applying currently enacted tax laws. We recognize valuation allowances, which reduce deferred tax assets to the amount that we estimate will be more likely than not realized, based upon available evidence and management judgment. We limit the deferred tax assets recognized related to certain stock based compensation of our officers to amounts that we estimate will be deductible in future periods based upon the provisions of the

Internal Revenue Code Section 162(m). As of December 31, 2007, we had not recorded any valuation allowance against any of our deferred tax assets. In the event that we determine, based on available evidence and management judgment, that all or part of the net deferred tax assets will not be realized in the future, we would record a valuation allowance in the period the determination is made. In addition, the calculation of tax liabilities involves significant judgment in estimating the impact of uncertainties in the application of complex tax laws. Resolution of these uncertainties in a manner inconsistent with our expectations could have a material impact on our results of operations and financial position.

In July 2006, FASB issued FIN 48, which creates a single model to address accounting for uncertainty in tax positions by prescribing a minimum recognition threshold that a tax position is required to meet before being recognized in the financial statements. FIN 48, which we adopted effective January 1, 2007, establishes a two-step approach for evaluating tax positions. The first step, recognition, occurs when a company concludes (based solely on the technical aspects of the tax matter) that a tax position is more likely than not to be sustained on examination by a taxing authority. The second step, measurement, is only considered after step one has been satisfied and measures any tax benefit at the largest amount that is deemed more likely than not to be realized upon ultimate settlement of the uncertainty. Tax positions that fail to qualify for initial recognition are recognized in the first subsequent interim period that they meet the more likely than not standard, when they are resolved through negotiation or litigation with the taxing authority or upon the expiration of the statute of limitations. The application of tax laws and regulations is subject to legal and factual interpretation, judgment and uncertainty. Tax laws and regulations themselves are subject to change as a result of changes in fiscal policy, changes in legislation, evolution of regulations and court rulings. Therefore, the actual liability for U.S. or foreign taxes may be materially different from our estimates, which could result in the need to record additional tax liabilities or potentially to reverse previously recorded tax liabilities.

Goodwill and intangible assets

As of December 31, 2007 we recorded goodwill in the amount of $1.8 million as a result of our acquisition of Potentia Semiconductor Corporation, see Note 8 “Acquisition” in our notes to consolidated financial statements for details on our acquisition. In accordance with SFAS No. 142, *Goodwill and Other Intangible Assets*, we will evaluate goodwill for impairment on an annual basis, or as other indicators exist for a potential impairment. The provisions of SFAS No. 142 require that we perform a two-step impairment test. In the first step, we will compare the implied fair value of our single reporting unit to its carrying value, including goodwill. If the fair value of our reporting unit exceeds the carrying amount no impairment adjustment is required. If the carrying amount of our reporting unit exceeds the fair value, step two will be completed to measure the amount of goodwill impairment

loss, if any exists. If the carrying value of our single reporting unit's goodwill exceeds its implied fair value, then we record an impairment loss equal to the difference, but not in excess of the carrying amount of the goodwill.

SFAS No 142. also requires that intangible assets with estimable useful lives be amortized over their respective estimated useful lives, and reviewed for impairment in accordance with SFAS No. 144, *Accounting for the Impairment or Disposal of Long-Lived Assets*. We review long-lived assets, such as acquired intangibles and property and equipment, for impairment whenever events or changes in circumstances indicate that the carrying amount of an asset may not be recoverable. We measure recoverability of assets to be held and used by a comparison of the carrying amount of an asset to estimate undiscounted future cash flows expected to be generated by the asset. If the carrying amount of an asset exceeds its estimated future cash flows, we recognize an impairment charge by the amount by which the carrying amount of the asset exceeds the fair value of the asset. We would present assets to be disposed of separately in the balance sheet and would report the assets at the lower of the carrying amount or fair value less costs to sell, and would no longer depreciate the assets and liabilities of a disposed group classified as held for sale. Currently, we have no impairment of long-lived assets nor any assets held for disposal.

Results of Operations

The following table sets forth certain operating data in dollars, as a percentage of total net revenues and the increase (decrease) over prior periods for the periods indicated (in thousands).

	Year Ended December 31,							
	Amount			Percent of Net Revenues			Increase (Decrease)	
	2007	2006	2005	2007	2006	2005	2007 vs. 2006	2006 vs. 2005
Total net revenues	$191,043	$162,403	$143,071	100.0%	100.0%	100.0%	$ 28,640	$ 19,332
Cost of revenues	87,558	73,794	72,979	45.8	45.4	51.0	13,764	815
Gross profit	103,485	88,609	70,092	54.2	54.6	49.0	14,876	18,517
Operating expenses:								
Research and development	25,176	24,415	17,111	13.2	15.0	12.0	761	7,304
Sales and marketing	26,940	25,712	18,314	14.1	15.8	12.8	1,228	7,398
General and administrative	24,249	34,648	15,665	12.7	21.4	10.9	(10,399)	18,983
In-process research and development	1,370	—	—	0.7	—	—	1,370	—
Total operating expenses	77,735	84,775	51,090	40.7	52.2	35.7	(7,040)	33,685
Income from operations	25,750	3,834	19,002	13.5	2.4	13.3	21,916	(15,168)
Total other income	8,801	5,924	3,149	4.6	3.6	2.2	2,877	2,775
Income before provision for income taxes	34,551	9,758	22,151	18.1	6.0	15.5	24,793	(12,393)
Provision for income taxes	7,927	333	6,453	4.2	0.2	4.5	7,594	(6,120)
Net income	$ 26,624	$ 9,425	$ 15,698	13.9%	5.8%	11.0%	$ 17,199	$ (6,273)

Comparison of Years Ended December 31, 2007 and 2006

Net revenues. Net revenues consist of revenues from product sales, which are calculated net of returns and allowances, plus license fees and royalties. Net revenues increased 18% in 2007 compared to 2006. The increase in revenues for the year ended December 31, 2007, compared to 2006, was driven by increased penetration of our products across all of our major end markets, comprised of a variety of power-supply applications including cellphone chargers, desktop computers, consumer appliances and a range of industrial applications. The increase in

net revenues was driven largely by sales of our LinkSwitch products, which are targeted primarily at replacing linear power supplies, as well as sales of our TinySwitch-III products, which serve a wide range of power-supply applications. The increase in net revenues was partially offset by reduced revenue from one of our major end-customers in the communications market. Manufacturers supplying power supplies to this end-customer redesigned their power supplies and in the process chose to use a competing product rather than our products. We believe this competing product is infringing on three of our patents and, accordingly, we have undertaken litigation against BCD Semiconductor Manufacturing Limited, as described in Part I, Item 3, Legal Proceedings, of this Annual Report on Form 10-K.

Our net revenue mix by product family and by the end markets served in 2007 and 2006 are as follows:

	Year Ended December 31,	
Product Family	**2007**	**2006**
TinySwitch	52%	53%
TOPSwitch	28%	36%
LinkSwitch	18%	9%
DPA-Switch	2%	2%

	Year Ended December 31,	
End Market	**2007**	**2006**
Consumer	30%	32%
Communications	27%	28%
Computer	21%	19%
Industrial electronics	15%	15%
Other	7%	6%

International revenues, comprised of sales outside of North and South America, were $181.8 million in 2007 compared to $150.7 million in 2006, representing approximately 95% and 93% of net revenues in those respective periods. Although the power supplies using our products are designed and distributed worldwide, most of these power supplies are manufactured by our customers in Asia. As a result, sales to this region were 81% and 78% of our net revenues for 2007 and 2006, respectively. The increase in sales to Asia as a percentage of revenues was driven primarily by the increase in sales of our LinkSwitch products to customers in the Asia region. We expect international sales to continue to account for a large portion of our net revenues.

Net product revenues for 2007 were divided 64% to distributors and 36% to OEMs and merchant power supply manufacturers, compared to 63% to distributors and 37% to OEMs and merchant power supply manufacturers in 2006. In 2007 and 2006, one customer, Avnet, a distributor of our products, accounted for approximately 23% of net revenues. No other customer accounted for 10% or more of our net revenues.

Customer demand for our products can change quickly and unexpectedly. Our customers perceive that our products are readily available and typically order only for their short-term needs. Our revenue levels are highly dependent on the amount of new orders that we receive for which product can be delivered by us within the same period. Orders that are booked and shipped within the same period are called “turns business.” Because of the uncertainty of customer demand, and the short lead-time environment and proportionally high turns business, it is difficult to predict future levels of revenues and profitability.

Gross profit. Gross profit is net revenues less cost of revenues. Our cost of revenues consists primarily of costs associated with the purchase of wafers from our contracted foundries, the assembly and packaging of our products by sub-contractors, internal labor and overhead associated with product testing performed in our own facility, and testing of packaged components performed by sub-contractors. Gross margin is gross profit divided by

net revenues. The 0.4% decrease in our gross margin in 2007 compared to 2006 related primarily to the fact that our gross margin for 2006 was positively impacted by the recognition of $3.4 million in revenues and gross profits as a result of a settlement agreement under which one of our distributors agreed to reimburse us for discrepant ship and debit requests. Going forward, we have undertaken a strategy of selectively pursuing certain high-volume design opportunities which may bring lower-than-average gross profit margins. Our overall gross profit margin may fluctuate depending on our success in winning such designs as well as our success in further reducing our manufacturing costs.

Research and development expenses. Research and development, or R&D, expenses consist primarily of employee-related expenses including stock-based compensation and expensed material and facility costs associated with the development of new processes and new products. We also record R&D expenses for prototype wafers related to new products until such products are released to production. R&D expenses increased by 3% in 2007 compared to 2006. The primary driver of the increase in R&D expenses was an increase in internal personnel and related expenses. The increase in R&D expenses reflects our accelerated investment in both new wafer manufacturing technologies and new product development. This increase was partially offset by lower stock-based compensation expense, as we issued fewer common stock options, and the issue date of such options was later in the year in 2007 compared to 2006. We expect R&D expenses to increase in 2008 primarily as a result of increased headcount related to our acquisition of Potentia Semiconductor Corporation in December 2007. See Note 8 “Acquisition” in our notes to consolidated financial statements.

Sales and marketing expenses. Sales and marketing expenses consist primarily of employee-related expenses, including stock-based compensation, commissions to sales representatives, and facilities expenses, including expenses associated with our regional sales and support offices. Sales and marketing expenses increased by 5% in 2007 compared to 2006. The increase in sales and marketing expenses was due primarily to increased headcount to increase our global sales capabilities. Expenses related to increased headcount including salaries, payroll taxes, benefits and travel increased by approximately $1.5 million in 2007 compared to 2006. This increase was partially offset by lower stock-based compensation expense, as we issued fewer common stock options, and the issue date of such options was later in the year in 2007 compared to 2006. We expect sales and marketing expenses to increase in absolute dollars in 2008 as we continue to grow our international business, but these expenses may fluctuate as a percentage of our net revenues.

General and administrative expenses. General and administrative, or G&A, expenses consist primarily of employee-related expenses, including stock-based compensation expenses for administration, finance, human resources and general management, as well as consulting, professional services, legal and auditing expenses. G&A expenses decreased 30% in 2007 compared to 2006. The decrease was due primarily to lower expenses associated with the special investigation into our practices for granting stock options, and the related restatement of our financial statements. These expenses totaled approximately $5.4 million in 2007 compared to approximately $13.2 million in 2006. Also contributing to the decrease was lower stock-based compensation expense, as we issued fewer common stock options, and the issue date of such options was later in the year in 2007 compared to 2006. We expect G&A expenses to decrease in 2008 compared to 2007 due to the completion of the restatement of our financial statements in 2007. We expect this decrease to be partially offset by increased expenses related to patent litigation.

In-process research and development. In connection with our acquisition of Potentia Semiconductor Corporation, we incurred a one time charge of $1.4 million related to in-process research and development for technology that had not reached technological feasibility. For details on our acquisition see Note 8 “Acquisition” in our notes to consolidated financial statements.

Total other income. The increase in total other income of 49% in 2007 compared to 2006 was due primarily to an increase in interest income on our cash and investment balances. Interest income grew due to an increase in total cash and investments. In 2007, total investment securities totaled $180.0 million, and consisted of cash equivalents and short term investments, compared to $117.0 million of cash equivalents, short term and long term investments in

2006. The increase was also attributable to a $0.8 million reimbursement for a directors and officers liability insurance claim received in the second quarter of 2007.

Provision for income taxes. Provision for income taxes represents Federal, state and foreign taxes. We calculated our provision for income taxes to be $7.9 million for 2007 compared to a provision of $0.3 million for 2006. Our effective tax rate for 2007 was approximately 23%, compared to approximately 3.4% in 2006. The increase in our effective tax rate in 2007 compared to 2006 was primarily due to an increase in profit before tax driven by increased sales and a reduction in restatement costs of approximately $8.0 million. The increase in our effective tax rate was partially offset by a decrease in the tax effect of stock-based compensation charges.

Comparison of Years Ended December 31, 2006 and 2005

Net revenues. Net revenues increased 13.5% in 2006 compared to 2005. The increase was driven primarily by penetration of our products in the industrial end market, including such applications as industrial controls, utility meters, external adapters, uninterruptible power supplies and lighting applications. The increase also resulted from increased penetration in the consumer market, including applications such as major appliances, external adapters and audio equipment, and the communications market, including applications such as voice-over-IP phones and cordless phones.

Our revenue growth in 2006 was driven by an increase in gross sales of all four of our main product families. Our net revenue also benefited from a settlement agreement under which one of our distributors agreed to reimburse us for discrepant ship and debit requests totaling approximately $3.4 million; we received this reimbursement in April 2006.

Our net revenue mix by product family and by the end markets served in 2006 and 2005 are as follows:

	Year Ended December 31,	
Product Family	**2006**	**2005**
TinySwitch	53%	57%
TOPSwitch	36%	38%
LinkSwitch	9%	5%
DPA-Switch	2%	—%

	Year Ended December 31,	
End Market	**2006**	**2005**
Consumer	32%	30%
Communications	28%	29%
Computer	19%	23%
Industrial electronics	15%	11%
Other	6%	7%

International revenues, comprised of sales outside of the Americas, were $150.7 million in 2006 compared to $133.6 million in 2005, representing approximately 93% of net revenues in both periods. Although the power supplies using our products are designed and distributed worldwide, most of these power supplies are manufactured by our customers in Asia. As a result, sales to this region were 78% and 79% of our net revenues for 2006 and 2005, respectively. We expect international sales to continue to account for a large portion of our net revenues.

Net product revenues for 2006 were divided 63% to distributors and 37% to OEMs and merchant power supply manufacturers, compared to 60% to distributors and 40% to OEMs and merchant power supply manufacturers in 2005. In 2006, one customer, Avnet, a distributor of our products, accounted for approximately

23% of net revenues. In April 2006, we terminated our relationship with Synnex Technologies, a distributor, that accounted for 18% of net revenues in 2005. We have replaced this relationship with other distribution relationships, and therefore do not believe that the termination has had or will have a material impact to our business.

Gross profit. The increase in our gross margin from 2005 to 2006 was mainly due to the absorption of fixed manufacturing costs across higher volumes, higher product yields, lower test costs due to the migration of our test processes to overseas sub-contractors, and the sale of excess and obsolete inventory for which we had fully reserved. These improvements were partially offset by stock-based compensation costs recognized as a result of our adoption of SFAS No. 123(R). Stock-based compensation costs were $1.3 million, or 0.8% of net revenues, in 2006 compared to $0.4 million, or 0.3% of net revenues, in 2005.

Research and development expenses. Research and development, or R&D, expenses increased by 43% from 2005 to 2006. The primary driver of the increase in R&D expenses was an increase in internal personnel and related expenses. The increase in R&D expenses reflects our accelerated investment in both new wafer manufacturing technologies and new product development. In addition, R&D expenses in 2006 included $4.3 million of employee stock-based compensation expense related to SFAS No. 123(R) compared to stock-based compensation expense of $1.0 million in 2005.

Sales and marketing expenses. Sales and marketing expenses increased by 40% from 2005 to 2006. The increase was primarily due to stock-based compensation expenses, reflecting the implementation of SFAS No. 123(R) in the first quarter of 2006. Stock-based compensation expense included in sales and marketing expenses totaled $5.5 million in 2006, compared to $0.7 million in 2005. The increase was also driven by higher headcount in sales and field applications engineering to increase our global sales capabilities.

General and administrative expenses. General and administrative, or G&A, expenses increased 121% from 2005 to 2006. The increase was due primarily to expenses associated with the special investigation into our practices for granting stock options, and the related restatement of our financial statements. These expenses totaled approximately $13.2 million in 2006, compared to zero in 2005. Also contributing to the increase was higher stock-based compensation expense reflecting the implementation of SFAS No. 123(R) in the first quarter of 2006. Stock-based compensation expense included in G&A expenses totaled $4.4 million in 2006, compared to $1.1 million in 2005. Expenses associated with our patent-infringement litigation against Fairchild Semiconductor and System General Corp., as described in Part I, Item 3 Legal Proceedings, were $7.0 million in 2006 and $5.5 million in 2005.

Total other income. The increase in total other income from 2005 to 2006 was due to an increase in interest income on our cash and investment balances. Interest income, which consists primarily of income earned on short-term and long-term investments, grew primarily due to an increase in our average interest rate from 4.1% at December 31, 2005 to 5.4% at December 31, 2006.

Provision for income taxes. We calculated our provision for income taxes to be $0.3 million for 2006 compared to a provision of $6.5 million for 2005. Our effective tax rate for 2006 was approximately 3.4% compared to approximately 29% in 2005. The decrease in our effective tax rate in 2006 compared to 2005 was primarily due to the increase in costs in higher income tax jurisdictions incurred in connection with our previously announced investigation into our historical stock option practices and the resulting restatements of our prior financial statements, and higher profitability in lower income tax jurisdictions.

Liquidity and Capital Resources

Since our initial public offering of common stock in December 1997, our principal source of funding has been cash from our operations.

We had approximately $205.5 million in cash, cash equivalents and short-term investments (including $1.3 million of restricted cash) at December 31, 2007. We had $132.7 million at December 31, 2006, and $130.5 million

at December 31, 2005, in cash, cash equivalents, short-term and long-term investments (including $1.3 million of restricted cash in 2006). On October 26, 2006, we entered into a security agreement with the Union Bank of California, whereby we agreed to maintain $1.3 million in an interest-bearing certificate of deposit with the bank. The purpose of this agreement is to secure commercial letters of credit and standby letters of credit up to the deposit amount. This agreement remains in effect until cancellation of our letter of credit. As of December 31, 2007, we have no other credit facilities.

As of December 31, 2007, 2006 and 2005 we had working capital, defined as current assets less current liabilities, of approximately $215.0 million, $133.6 million and $132.8 million, respectively.

Our operating activities generated cash of $62.6 million, $29.2 million and $36.0 million in the years ended December 31, 2007, 2006 and 2005, respectively. In each of these years, cash was primarily generated from operating activities in the ordinary course of business.

Cash provided by operating activities totaled $62.6 million in the year ended December 31, 2007. Our net income accounted for $26.6 million of this amount. We recognized $13.7 million in stock-based compensation and related expenses, which reduced our net income significantly but was not a use of cash. We also recognized $8.2 million in depreciation and amortization expenses, which were also non-cash expenses. In addition we

recognized a tax benefit of $3.5 million associated with employee stock plans. Changes in operating assets and liabilities included a decrease in inventories of $8.6 million reflecting the streamlining of our supply chain. Other factors increasing our cash provided by operating activities included increased taxes payable and other accrued liabilities of $3.1 million, due primarily to increased taxes recorded on higher income and the impact of adopting FIN 48 in 2007. In addition, accounts payable increased $2.5 million, due primarily to purchases of test equipment and raw materials for the production of our products. These increases were partially off-set by an increase in accounts receivable of $3.7 million, primarily reflecting growth in our net revenues.

Cash provided by operating activities totaled $29.2 million in the year ended December 31, 2006. Our net income accounted for $9.4 million of this amount. We recognized $15.5 million in stock-based compensation expenses, which reduced our net income significantly but was not a use of cash. We also recognized $7.1 million in depreciation and amortization expenses, which were also non-cash expenses. Increases in inventories resulted in a $10.1 million use of cash. This increase primarily reflected higher levels of production in anticipation of future growth in sales. Also, our sales in the fourth quarter of 2006 were less than expected, reflecting a broad slowdown in the analog semiconductor industry. Higher taxes payable and other accrued liabilities largely offset the cash impact of the increase in inventories, such that the overall net change in operating assets and liabilities did not have a significant impact on cash from operations.

In 2005, cash generated by operating activities totaled $36.0 million. Our net income accounted for $15.7 million of this total, while depreciation and amortization, which are non-cash expenses, totaled $6.3 million. Lower inventories, reflecting decreased purchases of raw material components, resulted in a $7.5 million source of cash, while an increase in taxes payable and other accrued liabilities, primarily due to an increase in income taxes related to lower income in lower-tax-rate foreign jurisdictions, resulted in a $5.2 million source of cash.

Our investing activities for the year ended December 31, 2007 resulted in a $95 million use of cash. This use of cash included net purchases totaling $79 million of securities held to maturity, property and equipment purchases of $11.0 million, and the acquisition of Potentia Semiconductor Corporation for $5.5 million, including closing costs. Refer to Note 8 in our notes to consolidated financial statements for details on our acquisition. We do not believe the current market instability will have a significant impact on our investment portfolio, as of December 31, 2007, we did not hold asset backed or mortgage backed securities.

Our investing activities for the year ended December 31, 2006 resulted in a $0.3 million use of cash, as net proceeds totaling $14.1 million from the sale and purchase of securities held to maturity were offset by purchases of

property and equipment of $10.1 million, the acquisition of a technology license from our foundry OKI for $3.0 million, and the purchase of a $1.3 million certificate of deposit as part of a security agreement related to standby letters of credit used for purchases of silicon wafers.

Our investing activities for the year ended December 31, 2005 resulted in a $7.8 million use of cash, which was driven primarily by the issuance of a $10.0 million promissory note to a supplier, as described in Note 9, “Loan to Supplier,” in our notes to consolidated financial statements, plus purchases of property and equipment totaling $3.2 million and the acquisition of technology for $1.1 million. These uses of cash were offset in part by net proceeds of $6.5 million from short-term and long-term investments.

Our financing activities in 2007 resulted in net cash proceeds of $25.8 million. This was driven primarily by proceeds of $24.6 million from the issuance of common stock through the exercise of stock options. In addition there was an excess tax benefit from stock options exercised of $1.2 million. Our financing activities in 2006 resulted in a net use of cash totaling $13.9 million, driven primarily by share repurchases of $19.6 million offset by proceeds of $5.6 million from the issuance of common stock. Our financing activities in 2005 resulted in a net use of cash totaling $25.8 million, driven primarily by share repurchases of $33.7 million. This use of cash was partially offset by receipts of $7.9 million from the issuance of common stock through the exercise of stock options and purchases through our employee stock purchase plan.

On October 20, 2004, we announced that our board of directors had authorized the repurchase of up to $40 million of our common stock. From inception of the stock repurchase program in October 2004 through June 30, 2005, we repurchased 2,033,270 shares for approximately $40 million. On October 19, 2005, we announced that our board of directors had authorized a second stock repurchase program of up to $25 million of our common stock. From inception of this second stock repurchase plan through June 2006, we purchased a total of 1,334,216 shares for $25 million. In February 2008, our board of directors authorized a new stock repurchase program of up to $50 million of our common stock. Stock repurchase activity under this program commenced in February 2008.

During 2007, a significant portion of our positive cash flow was generated by our operations. If our operating results deteriorate in future periods, our ability to generate positive cash flow from operations may be jeopardized. In that case, we may be forced to use our cash, cash equivalents and short-term investments to fund our operations. We believe that cash generated from operations, together with existing sources of liquidity, will satisfy our projected working capital and other cash requirements for at least the next 12 months.

Off-Balance Sheet Arrangements

As of December 31, 2007 and 2006, we did not have any off-balance sheet arrangements or relationships with unconsolidated entities or financial partnerships, such as entities often referred to as structured finance or special purposes entities, which are typically established for the purpose of facilitating off-balance sheet arrangements or other contractually narrow or limited purposes.

Contractual Obligations

As of December 31, 2007, we had the following contractual obligations and commitments, including leases related to the acquisition of Potentia Semiconductor Corporation, see Note 8 “Acquisition” in our notes to consolidated financial statements for details. (in thousands):

	Payments due by period				
	Total	Less than 1 Year	1-3 Years	4-5 Years	Over 5 Years
Purchase obligations	$16,437	$16,437	$ —	$ —	$ —
Operating lease obligations	1,587	752	604	109	122

Total	$18,024	$17,189	$ 604	$ 109	$ 122

As of December 31, 2007, our total amount of unrecognized tax benefits was $19.1 million, and it was classified as deferred tax assets and long-term income taxes payable in our condensed consolidated balance sheet. The settlement period for our income tax liabilities cannot be determined; however, they are not expected to be due within the next twelve months.

Item 7A. Quantitative and Qualitative Disclosures About Market Risk.

Interest Rate Risk. Our exposure to market risk for changes in interest rates relates primarily to our investment portfolio. We consider cash invested in highly liquid financial instruments with a remaining maturity of three months or less at date of purchase to be cash equivalents. Investments in highly liquid financial instruments with maturities greater than three months but not longer than twelve months from the balance sheet date are classified as short-term investments. Investments in highly liquid financial instruments with maturities greater than twelve months from the balance sheet date are classified as long-term investments. We do not use derivative financial instruments in our investment portfolio to manage our interest rate risk, foreign currency risk, or for any other purpose. We invest in high-credit quality issuers and, by policy, limit the amount of credit exposure to any one issuer. As stated in our policy, we seek to ensure the safety and preservation of our invested

principal funds by limiting default risk, market risk and reinvestment risk. We mitigate default risk by investing in safe and high-credit quality securities and by constantly positioning our portfolio to respond appropriately to a significant reduction in a credit rating of any investment issuer, guarantor or depository. The portfolio includes only marketable securities with active secondary or resale markets to facilitate portfolio liquidity. We do not hold any instruments for trading purposes. At December 31, 2007 and 2006 we held primarily cash equivalents and short-term investments with fixed interest rates and with maturity dates of less than twelve months.

The table below presents the carrying value and related weighted-average interest rates for our investment portfolio at December 31, 2007 and 2006. Carrying value approximates fair market value at December 31, 2007 and 2006 (in thousands, except weighted-average interest rates).

	December 31, 2007		December 31, 2006	
	Carrying Value	Weighted-Average Interest Rate	Carrying Value	Weighted-Average Interest Rate
Investment Securities Classified as Cash Equivalents:				
Commercial paper	$ 93,888	5.20%	$110,922	5.43%
Investment Securities Classified as Short-term Investments:				
U.S. government securities	2,000	4.60%	2,500	4.63%
U.S. corporate securities	83,820	5.05%	6	—
Total	85,820	5.03%	2,506	4.63%
Investment Securities Classified as Long-term Investments:				
U.S. government securities	—	—	3,999	4.88%
Total investment securities	$179,708	5.12%	$117,427	5.40%

These securities are subject to market interest rate risk and will vary in value as market interest rates fluctuate. To minimize market risk, most of our investments subject to market risk mature in less than one year, and therefore if market interest rates were to increase or decline by 10% from interest rates as of December 31, 2007 and 2006, the increase or decline in the fair market value of our portfolio on these dates would not have been material.

Foreign Currency Exchange Risk. We transact business in various foreign countries. Our primary foreign currency cash flows are in Asia and Western Europe and involve contracts with two of our suppliers (Matsushita and OKI). Currently, we do not employ a foreign currency hedge program utilizing foreign currency forward exchange contracts; however, the contract prices to purchase wafers from Matsushita and OKI are denominated in Japanese yen and both agreements allow for mutual sharing of the impact of the exchange rate fluctuation between Japanese yen and the U.S. dollar. One of our other major suppliers, Epson, contracts prices to purchase wafers in U.S. dollars, however, the agreement with Epson also allows for mutual sharing of the impact of the exchange rate fluctuation between Japanese yen and the U.S. dollar. Nevertheless, changes in the exchange rate between the U.S. dollar and the Japanese yen could subject our gross profit and operating results to the potential for material fluctuations.

It has been and currently is our practice to maintain a Japanese yen account with a U.S. bank in an amount that generally approximates expected payments to our wafer suppliers in Japan. This practice acts to minimize the impact of changes in the yen. In addition, the yen and the U.S. dollar historically have not fluctuated greatly from year to year; and typically we have not had a significant amount of foreign currency at risk. In light of these facts, we do not believe we have a material foreign currency exchange risk.

Item 8. Financial Statements and Supplementary Data.

The financial statements and supplementary data required by this item are set forth at the pages indicated at Item 15(a).

Item 9. Changes in and Disagreements with Accountants on Accounting and Financial Disclosure.

Not applicable.

Item 9A. Controls and Procedures.

Limitations Regarding the Effectiveness of Control Systems

It should be noted that any control system, no matter how well designed and operated, can provide only reasonable assurance to the tested objectives. The design of any control system is based in part upon certain assumptions about the likelihood of future events, and there can be no assurance that any design will succeed in achieving its stated goals under all potential future conditions, regardless of how remote. The inherent limitations in any control system include the realities that judgments related to decision-making can be faulty, and that reduced effectiveness in controls can occur because of simple errors or mistakes. Due to the inherent limitations in a cost-effective control system, misstatements due to error may occur and may not be detected.

Conclusion Regarding the Effectiveness of Disclosure Controls and Procedures

Under the supervision and with the participation of our management, including our chief executive officer and chief financial officer, we conducted an evaluation of the effectiveness of the design and operation of our disclosure controls and procedures, as defined in Rules 13a-15(e) and 15d-15(e) under the Securities Exchange Act of 1934 (“Exchange Act”), as of the end of the period covered by this report, December 31, 2007. Disclosure controls and procedures under the Exchange Act mean the controls and other procedures that are designed to provide reasonable assurance that the information required to be disclosed by Power Integrations in the reports that we file or submit under the Exchange Act is recorded, processed, summarized and reported within the time period specified in the Security and Exchange Commissions, or SEC’s, rules and forms. Disclosure controls and procedures include, without limitation, controls and procedures designed to provide reasonable assurance that information required to be disclosed by Power Integrations in the reports that we file or submit under the Exchange Act is accumulated and communicated to Power Integrations’ management, including our chief executive officer and chief financial officer, or persons performing similar functions, as appropriate to allow timely decisions regarding required disclosure.

Based on this evaluation, our chief executive officer and chief financial officer concluded that our disclosure controls and procedures were effective as of December 31, 2007. In making this conclusion, we had considered, among other factors, the remediation of our previously identified material weaknesses described in the following paragraphs related to accounting for stock grants, income tax accounting and the application of generally accepted accounting principles to non-routine transactions.

Internal Control Over Financial Reporting

Management's Annual Report on Internal Control over Financial Reporting

Our management is responsible for establishing and maintaining adequate internal control over financial reporting as defined in Exchange Act Rules 13a-15(f) and 15d-15(f). Under the Exchange Act, internal control over financial reporting means a process designed by, or under the supervision of, the principal executive and principal financial officers, or persons performing similar functions, and effected by the board of directors, management and other personnel, to provide reasonable assurance regarding the reliability of financial reporting and the preparation of financial statements for external purposes in accordance with generally accepted

accounting principles and includes those policies and procedures that: (1) pertain to the maintenance of records that in reasonable detail accurately and fairly reflect the transactions and dispositions Power Integrations' assets; (2) provide reasonable assurance that transactions are recorded as necessary to permit preparation of financial statements in accordance with generally accepted accounting principles, and that our receipts and expenditures are being made only in accordance with authorizations of our management and directors; and, (3) provide reasonable assurance regarding prevention or timely detection of unauthorized acquisition, use or disposition of our assets that could have a material effect on our consolidated financial statements.

Under the supervision and with the participation of our management, including our chief executive officer and chief financial officer, we conducted an evaluation of the effectiveness of our internal control over financial reporting based on the framework in *Internal Control—Integrated Framework* issued by the Committee of Sponsoring Organizations of the Treadway Commission. Our management has concluded that, as of December 31, 2007, our internal control over financial reporting was effective based on these criteria.

Remediation of Material Weaknesses

Remediation of our Material Weakness Related to Stock-Based Compensation

We had previously concluded that a material weakness in our internal control over financial reporting related to stock-based compensation existed as of December 31, 2006, as reported in our Annual Report on Form 10-K for the year ended December 31, 2006. We did not have sufficient controls and procedures in place to cause us to have a less than a reasonable possibility that a material misstatement would not be prevented or detected in the consolidated financial statements and related disclosures from the application of APB 25, SFAS No. 123 and SFAS No. 123(R), which replaced APB 25 and SFAS 123 effective January 1, 2006.

Throughout the year ended December 31, 2007, we have enhanced our control activities related to accounting for stock-based compensation, and we have engaged the services of an external specialist in stock-based compensation to assist us in the accounting for stock-based compensation as per the requirements of SFAS No. 123R. In addition, prior to the beginning of 2007, we had engaged our corporate counsel to revise our policies and procedures surrounding the administration of our stock option grants to our employees that, along with other enhancements that we have now established related to the granting and accounting for stock options, strengthened our internal control over financial reporting related to stock-based compensation.

During the fourth quarter of 2007, management evaluated and tested these controls and determined the material weakness was remediated.

Remediation of our Material Weakness Related to Income Tax Accounting

We had previously concluded that a material weakness in our internal control over financial reporting related to tax accounting existed as of December 31, 2006, as reported in our Annual Report on Form 10-K for the year ended December 31, 2006. We did not have sufficient controls and procedures in place to cause us to have less than a reasonable possibility that a material misstatement would not be prevented or detected in the consolidated financial statements and related disclosures from the accounting and review of our income taxes payable, deferred income tax assets and liabilities, and the related tax provision.

Throughout the year ended December 31, 2007, management improved our process related to tax accounting with the assistance of our third party tax accounting firm, by engaging more senior and qualified staff, and enhancing the administrative process, including detailed checklists, and quarterly documentation by management and our third party tax accounting firm of changes in compliance and tax structure.

During the fourth quarter of 2007, management evaluated and tested these controls and determined the material weakness was remediated.

Remediation of our Material Weakness Relating to the Application of Generally Accepted Accounting Principles to Non-Routine Transactions

We had previously concluded that a material weakness in our internal control over financial reporting related to the application of generally accepted accounting principles to non-routine transactions existed as of December 31, 2006, as reported in our Annual Report on Form 10-K for the year ended December 31, 2006. We did not have sufficient controls and procedures in place to cause us to have a less than a reasonable possibility that a material misstatement would not be prevented or detected in the consolidated financial statements and related disclosures from the application of generally accepted accounting principles to material, non-routine, non-systematic transactions.

Throughout the year ended December 31, 2007, to strengthen our processes relating to the accounting for material, non-routine, non-systematic transactions in accordance with generally accepted accounting principles, we have implemented a process to identify and research those items and engage technical expertise, if necessary, to provide reasonable assurance that the transactions are accounted for in accordance with generally accepted accounting principles. Our policy requires the documentation and evaluation of complex and unusual transactions which are material either by the size or the nature of the transaction. In conjunction with this policy, we have implemented more rigorous controls for ensuring that those transactions which involve a significant level of management judgment or which by the nature of the transactions rise to a level requiring communication to the Audit Committee are, in fact, communicated to the Audit Committee on a timely basis.

During the fourth quarter of 2007, management evaluated and tested these controls and determined the material weakness was remediated.

Changes in Internal Control over Financial Reporting

In the fourth quarter ended December 31, 2007, the changes in our internal control over financial reporting relate primarily to our remediation efforts for the three material weaknesses mentioned above. This consisted primarily of the process documentation and testing of our controls related to accounting for stock-based compensation, income tax accounting and the application of generally accepted accounting principles to non-routine transactions. Other than the remediation efforts related to our previously reported material weaknesses described above, there have been no changes that have materially affected, or are reasonably likely to materially affect, our internal control over financial reporting during the quarter ended December 31, 2007.

Deloitte & Touche LLP, the independent registered public accounting firm that audited the consolidated financial statements included in this Annual Report on Form 10-K, has issued an audit report on our internal control over financial reporting. This report is included herein.

REPORT OF INDEPENDENT REGISTERED PUBLIC ACCOUNTING FIRM

To the Board of Directors and Stockholders of Power Integrations, Inc.:

We have audited the internal control over financial reporting of Power Integrations, Inc. and subsidiaries (collectively the Company) as of December 31, 2007, based on the criteria established *in Internal Control—Integrated Framework* issued by the Committee of Sponsoring Organizations of the Treadway Commission. The Company's management is responsible for maintaining effective internal control over financial reporting and for its assessment of the effectiveness of internal control over financial reporting, included in the accompanying Management's Annual Report on Internal Control over Financial Reporting. Our responsibility is to express an opinion on the Company's internal control over financial reporting based on our audit.

We conducted our audit in accordance with the standards of the Public Company Accounting Oversight Board (United States). Those standards require that we plan and perform the audit to obtain reasonable assurance about whether effective internal control over financial reporting was maintained in all material respects. Our audit included obtaining an understanding of internal control over financial reporting, assessing the risk that a material weakness exists, testing and evaluating the design and operating effectiveness of internal control based on the assessed risk, and performing such other procedures as we considered necessary in the circumstances. We believe that our audit provides a reasonable basis for our opinion.

A company's internal control over financial reporting is a process designed by, or under the supervision of, the company's principal executive and principal financial officers, or persons performing similar functions, and effected by the company's board of directors, management, and other personnel to provide reasonable assurance regarding the reliability of financial reporting and the preparation of financial statements for external purposes in accordance with generally accepted accounting principles. A company's internal control over financial reporting includes those policies and procedures that (1) pertain to the maintenance of records that, in reasonable detail, accurately and fairly reflect the transactions and dispositions of the assets of the company; (2) provide reasonable assurance that transactions are recorded as necessary to permit preparation of financial statements in accordance with generally accepted accounting principles, and that receipts and expenditures of the company are being made only in accordance with authorizations of management and directors of the company; and (3) provide reasonable assurance regarding prevention or timely detection of unauthorized acquisition, use, or disposition of the company's assets that could have a material effect on the financial statements.

Because of the inherent limitations of internal control over financial reporting, including the possibility of collusion or improper management override of controls, material misstatements due to error or fraud may not be prevented or detected on a timely basis. Also, projections of any evaluation of the effectiveness of the internal control over financial reporting to future periods are subject to the risk that the controls may become inadequate because of changes in conditions, or that the degree of compliance with the policies or procedures may deteriorate.

In our opinion, the Company maintained, in all material respects, effective internal control over financial reporting as of December 31, 2007, based on the criteria established in *Internal Control—Integrated Framework* issued by the Committee of Sponsoring Organizations of the Treadway Commission.

We have also audited, in accordance with the standards of the Public Company Accounting Oversight Board (United States), the consolidated financial statements and financial statement schedule as of and for the year ended December 31, 2007, of the Company and our report dated March 7, 2008 expressed an unqualified opinion on those financial statements and financial statement schedule and includes an explanatory paragraph regarding the

Company's adoption of Financial Standards Accounting Board Interpretation No. 48, *Accounting for Uncertainty in Income Taxes*.

/s/ DELOITTE & TOUCHE LLP

San Jose, California
March 7, 2008

Item 9B. Other Information.

Not Applicable

PART III

Item 10. Directors, Executive Officers and Corporate Governance.

The names of our executive officers and their ages, titles and biographies as of the date hereof are incorporated by reference from Part I, Item 1, above.

The following information is included in our Notice of Annual Meeting of Stockholders and Proxy Statement to be filed within 120 days after our fiscal year end of December 31, 2007, or the Proxy Statement, and is incorporated herein by reference:

- Information regarding our directors who are standing for reelection and any persons nominated to become a director is set forth under Proposal 1 entitled "Election of Directors."
- Information regarding our audit committee and our designated "audit committee financial expert" is set forth under the captions "Information Regarding the Board and its Committees" and "Audit Committee" under proposal 1 entitled "Election of Directors."
- Information on our code of business conduct and ethics for directors, officers and employees is set forth under the caption "Code of Business Conduct and Ethics" under proposal 1 entitled "Election of Directors."
- Information regarding Section 16(a) beneficial ownership reporting compliance is set forth under the caption "Section 16(a) Beneficial Ownership Reporting Compliance."
- Information regarding procedures by which stockholders may recommend nominees to our Board of Directors is set forth under the caption "Nominating and Governance Committee" under Proposal 1 entitled "Election of Directors."

Item 11. Executive Compensation.

Information regarding compensation of our named executive officers is set forth under the caption "Compensation of Executive Officers" in the Proxy Statement, which information is incorporated herein by reference.

Information regarding compensation of our directors is set forth under the caption "Compensation of Directors" in the Proxy Statement, which information is incorporated herein by reference.

Information regarding compensation committee interlocks is set forth under the caption "Compensation Committee Interlocks and Insider Participation" in the Proxy Statement, which information is incorporated herein by reference.

The Compensation Committee Report is set forth under the caption "Compensation Committee Report" in the Proxy Statement, which report is incorporated herein by reference.

Item 12. Security Ownership of Certain Beneficial Owners and Management and Related Stockholder Matters.

Information regarding security ownership of certain beneficial owners, directors and executive officers is set forth under the caption "Security Ownership of Certain Beneficial Owners and Management" in the Proxy Statement, which information is incorporated herein by reference.

Information regarding our equity compensation plans, including both stockholder approved plans and non-stockholder approved plans, is set forth under the caption "Equity Compensation Plan Information" in the Proxy Statement, which information is incorporated herein by reference.

Item 13. Certain Relationships and Related Transactions, and Director Independence.

Information regarding certain relationships and related transactions is set forth under the caption "Certain Relationships and Related Transactions" in the Proxy Statement, which information is incorporated herein by reference.

Information regarding director independence is set forth under the caption "Proposal 1–Election of Directors" in the Proxy Statement, which information is incorporated herein by reference.

Item 14. Principal Accountant Fees and Services.

Information regarding principal auditor fees and services is set forth under "Principal Accountant Fees and Services" in the Proposal entitled "Ratification of Selection of Independent Registered Public Accounting Firm" in the Proxy Statement, which information is incorporated herein by reference.

PART IV

Item 15. Exhibits and Financial Statement Schedules.

(a) The following documents are filed as part of this Form:

1. Financial Statements

	Page
Report of Independent Registered Public Accounting Firm	50
Consolidated Balance Sheets	51
Consolidated Statements of Income	52
Consolidated Statements of Stockholders' Equity	53
Consolidated Statements of Cash Flows	54
Notes to Consolidated Financial Statements	55

2. Financial Statement Schedules

Schedule II: Valuation and Qualifying Accounts.

All other schedules are omitted because they are not applicable or the required information is shown in the consolidated financial statements or notes thereto.

3. Exhibits

See Index to Exhibits at the end of this Report, which is incorporated herein by reference. The Exhibits listed in the accompanying Index to Exhibits are filed as part of this report.

REPORT OF INDEPENDENT REGISTERED PUBLIC ACCOUNTING FIRM

To the Board of Directors and Stockholders of Power Integrations, Inc.:

We have audited the accompanying consolidated balance sheets of Power Integrations, Inc. and subsidiaries (the Company) as of December 31, 2007 and 2006, and the related consolidated statements of income, stockholders' equity, and cash flows for each of the three years in the period ended December 31, 2007. Our audits also included the financial statement schedule for the years ended December 31, 2007, 2006 and 2005, listed in the Index at Item 15 (a) (2). These consolidated financial statements and financial statement schedule are the responsibility of the Company's management. Our responsibility is to express an opinion on the consolidated financial statements and financial statement schedule based on our audits.

We conducted our audits in accordance with the standards of the Public Company Accounting Oversight Board (United States). Those standards require that we plan and perform the audit to obtain reasonable assurance about whether the financial statements are free of material misstatement. An audit includes examining, on a test basis, evidence supporting the amounts and disclosures in the financial statements. An audit also includes assessing the accounting principles used and significant estimates made by management, as well as evaluating the overall financial statement presentation. We believe that our audits provide a reasonable basis for our opinion.

In our opinion, such consolidated financial statements present fairly, in all material respects, the financial position of the Company as of December 31, 2007 and 2006, and the results of its operations and its cash flows for each of the three years in the period ended December 31, 2007, in conformity with accounting principles generally accepted in the United States of America. Also, in our opinion, such financial statement schedule, when considered in relation to the basic consolidated financial statements taken as a whole, presents fairly, in all material respects, the information set forth therein.

As discussed in Note 6 to the consolidated financial statements, on January 1, 2007, the Company changed its method of accounting for uncertain income tax positions in accordance with guidance provided in the Financial Standards Accounting Board Interpretation No. 48, *Accounting for Uncertainty in Income Taxes*.

As discussed in Note 2 to the consolidated financial statements, on January 1, 2006, the Company changed its method of accounting for stock-based compensation in accordance with guidance provided in the Statement of Financial Accounting Standards No. 123(R), *Share Based Payment*.

We have also audited, in accordance with the standards of the Public Company Accounting Oversight Board (United States), the Company's internal control over financial reporting as of December 31, 2007, based on the criteria established in *Internal Control—Integrated Framework* issued by the Committee of Sponsoring Organizations of the Treadway Commission and our report dated March 7, 2008 expressed an unqualified opinion on the Company's internal control over financial reporting.

/s/ DELOITTE & TOUCHE LLP

San Jose, California

LII. **Table of Contents**

POWER INTEGRATIONS, INC.

CONSOLIDATED BALANCE SHEETS
(In thousands, except share and par value amounts)

	December 31,	
	2007	2006
ASSETS		
CURRENT ASSETS:		
Cash and cash equivalents	$118,353	$124,937
Restricted cash	1,300	1,300
Short-term investments	85,821	2,506
Accounts receivable, net of allowances of $386 and $527 in 2007 and 2006, respectively	14,221	10,489
Inventories	19,696	28,280
Deferred tax assets	1,259	2,199
Prepaid expenses and other current assets	2,957	4,009
Total current assets	243,607	173,720
INVESTMENTS	—	3,999
NOTE RECEIVABLE	10,000	10,000
PROPERTY AND EQUIPMENT, net	56,740	53,475
INTANGIBLE ASSETS, net	6,731	5,895
GOODWILL	1,824	—
DEFERRED TAX ASSETS	15,544	13,485
OTHER ASSETS	653	285
Total assets	$335,099	$260,859
LIABILITIES AND STOCKHOLDERS' EQUITY		
CURRENT LIABILITIES:		
Accounts payable	$ 10,792	$ 8,592
Accrued payroll and related expenses	9,212	8,668
Taxes payable	852	14,509
Deferred income on sales to distributors	5,226	4,901
Accrued professional and other fees	1,844	3,294
Other accrued liabilities	641	129
Total current liabilities	28,567	40,093
LONG-TERM INCOME TAXES PAYABLE	16,893	—
LONG-TERM DEFERRED TAXES	149	—
Total liabilities	45,609	40,093
COMMITMENTS AND CONTINGENCIES (Notes 3 and 7)		
STOCKHOLDERS' EQUITY:		
Preferred Stock, $0.001 par value		
Authorized—3,000,000 shares		
Outstanding—None	—	—
Common Stock, $0.001 par value		
Authorized—140,000,000 shares		

Outstanding—30,069,687 and 28,657,897 shares in 2007 and 2006, respectively	30	29
Additional paid-in capital	176,282	135,307
Accumulated translation adjustment	85	4
Retained earnings	113,093	85,426
Total stockholders' equity	289,490	220,766
Total liabilities and stockholders' equity	$335,099	$260,859

See accompanying notes to consolidated financial statements.

POWER INTEGRATIONS, INC.

CONSOLIDATED STATEMENTS OF INCOME
(In thousands, except per share amounts)

	Year Ended December 31,		
	2007	2006	2005
NET REVENUES	$191,043	$162,403	$143,071
COST OF REVENUES	87,558	73,794	72,979
GROSS PROFIT	103,485	88,609	70,092
OPERATING EXPENSES:			
Research and development	25,176	24,415	17,111
Sales and marketing	26,940	25,712	18,314
General and administrative	24,249	34,648	15,665
In-process research and development	1,370	—	—
Total operating expenses	77,735	84,775	51,090
INCOME FROM OPERATIONS	25,750	3,834	19,002
OTHER INCOME (EXPENSE):			
Interest income	8,513	6,468	3,820
Interest expense	—	(6)	(218)
Insurance reimbursement	841	—	—
Other, net	(553)	(538)	(453)
Total other income	8,801	5,924	3,149
INCOME BEFORE PROVISION FOR INCOME TAXES	34,551	9,758	22,151
PROVISION FOR INCOME TAXES	7,927	333	6,453
NET INCOME	$ 26,624	$ 9,425	$ 15,698
EARNINGS PER SHARE:			
Basic	$ 0.92	$ 0.32	$ 0.53
Diluted	$ 0.85	$ 0.31	$ 0.51
SHARES USED IN PER SHARE CALCULATION:			
Basic	28,969	29,059	29,568
Diluted	31,254	30,819	30,843

See accompanying notes to consolidated financial statements.

POWER INTEGRATIONS, INC.

CONSOLIDATED STATEMENTS OF STOCKHOLDERS' EQUITY
(In thousands)

	Common Stock		Additional Paid-In Capital	Deferred Compensation	Accumulated Translation Adjustment	Retained Earnings	Total Stockholders' Equity
	Shares	Amount					
BALANCE AT JANUARY 1, 2005	30,492	$ 30	$158,613	$ (3,076)	$ (114)	$ 60,303	$ 215,756
Issuance of common stock under employee stock option plan	414	—	5,467	—	—	—	5,467
Repurchase of common stock	(1,692)	(1)	(33,661)	—	—	—	(33,662)
Issuance of common stock under employee stock purchase plan	153	—	2,407	—	—	—	2,407
Income tax benefits from employee stock option exercises	—	—	646	—	—	—	646
Stock-based compensation expense for variable awards	—	—	744	16	—	—	760
Stock-based compensation expense for fixed awards	—	—	(20)	27	—	—	7
Amortization of deferred stock-based compensation	—	—	—	2,287	—	—	2,287
Translation adjustment	—	—	—	—	(7)	—	(7)
Net income	—	—	—	—	—	15,698	15,698
BALANCE AT DECEMBER 31, 2005	29,367	29	134,196	(746)	(121)	76,001	209,359
Issuance of common stock under employee stock option plan	294	—	4,248	—	—	—	4,248
Repurchase of common stock	(1,085)	—	(19,643)	—	—	—	(19,643)
Issuance of common stock under employee stock purchase plan	82	—	1,315	—	—	—	1,315
Income tax benefits from employee stock option exercises	—	—	179	—	—	—	179
Stock-based compensation expense related to employee stock options	—	—	15,114	—	—	—	15,114
Stock-based compensation expense related to employee stock purchases	—	—	644	—	—	—	644
Elimination of deferred compensation in relation to the adoption of SFAS No. 123(R)	—	—	(746)	746	—	—	—
Translation adjustment	—	—	—	—	125	—	125
Net income	—	—	—	—	—	9,425	9,425
BALANCE AT DECEMBER 31, 2006	28,658	29	135,307	—	4	85,426	220,766
Cumulative effect of adoption of	—	—	—	—	—	1,043	1,043

FIN No.48							
Issuance of common stock under employee stock option plan	1,412	1	24,607	—	—	—	24,608
Income tax benefits from employee stock option exercises	—	—	3,354	—	—	—	3,354
Stock-based compensation expense related to employee stock options	—	—	12,180	—	—	—	12,180
Stock-based compensation expense related to employee stock purchases	—	—	1,083	—	—	—	1,083
Impact of 409A cure employee bonus, net of taxes (Note 6)			(249)				(249)
Translation adjustment	—	—	—	—	81	—	81
Net income	—	—	—	—	—	26,624	26,624
BALANCE AT DECEMBER 31, 2007	30,070	$ 30	$176,282	$ —	$ 85	$113,093	$ 289,490

See accompanying notes to consolidated financial statements.

LV. [Table of Contents]

POWER INTEGRATIONS, INC.

CONSOLIDATED STATEMENTS OF CASH FLOWS
(In thousands)

	Year Ended December 31,		
	2007	2006	2005
CASH FLOWS FROM OPERATING ACTIVITIES:			
Net income	$ 26,624	$ 9,425	$ 15,698
Adjustments to reconcile net income to net cash provided by operating activities:			
Depreciation and amortization	8,247	7,097	6,264
Gain on sale of property, plant and equipment	(48)	—	—
Stock-based compensation expense	13,677	15,460	3,118
Amortization of discount on held to maturity investments	(742)	—	—
Interest on note receivable	(485)	—	—
In-process research and development	1,370	—	—
Deferred income taxes	(1119)	(4,912)	(24)
Provision for (reduction in) accounts receivable and other allowances	(64)	420	593
Excess tax benefit from stock options exercised	(1,184)	(172)	—
Tax benefit associated with employee stock plans and 409A cure	3,507	179	646
Stock compensation to non-employees	—	—	7
Change in operating assets and liabilities:			
Accounts receivable	(3,668)	2,579	(1,331)
Inventories	8,562	(10,053)	7,473
Prepaid expenses and other assets	1,989	(2,545)	1,121
Accounts payable	2,513	2,295	(3,170)
Taxes payable and other accrued liabilities	3,105	8,035	5,208
Deferred income on sales to distributors	325	1,422	421
Net cash provided by operating activities	62,609	29,230	36,024
CASH FLOWS FROM INVESTING ACTIVITIES:			
Purchases of property and equipment	(10,950)	(10,082)	(3,190)
Acquisition of technology patents / licenses	—	(3,000)	(1,101)
Acquisition of business, net of cash and cash equivalents acquired	(5,461)	—	—
Loan to supplier	—	—	(10,000)
Restricted cash	—	(1,300)	—

Proceeds from sales of available-for-sale investments	—	—	11,200
Purchases of held-to-maturity investments	(99,080)	(24,851)	(7,806)
Proceeds from sales of held-to-maturity investments	20,506	38,969	3,144
Net cash used in investing activities	(94,985)	(264)	(7,753)
CASH FLOWS FROM FINANCING ACTIVITIES:			
Net proceeds from issuance of common stock	24,608	5,563	7,874
Repurchase of common stock	—	(19,643)	(33,662)
Excess tax benefit from stock options exercised	1,184	172	—
Net cash provided by (used in) financing activities	25,792	(13,908)	(25,788)
NET INCREASE (DECREASE) IN CASH AND CASH EQUIVALENTS	(6,584)	15,058	2,483
CASH AND CASH EQUIVALENTS AT BEGINNING OF PERIOD	124,937	109,879	107,396
CASH AND CASH EQUIVALENTS AT END OF PERIOD	$118,353	$124,937	$109,879
SUPPLEMENTAL DISCLOSURE OF NON-CASH INVESTING AND FINANCING ACTIVITIES:			
Unpaid property and equipment	$ (313)	$ 887	$ (165)
SUPPLEMENTAL DISCLOSURE OF CASH FLOW INFORMATION:			
Cash paid for interest	$ —	$ 6	$ —
Cash paid for income taxes, net	$ 860	$ 909	$ 1,385

See accompanying notes to consolidated financial statements.

POWER INTEGRATIONS, INC.

NOTES TO CONSOLIDATED FINANCIAL STATEMENTS
DECEMBER 31, 2007

1. THE COMPANY:

Power Integrations, Inc., (or the "Company"), incorporated in California on March 25, 1988 and reincorporated in Delaware in December 1997, designs, develops, manufactures and markets proprietary, high-voltage, analog integrated circuits for use primarily in AC-DC and DC-DC power conversion in the consumer, communications, computer and industrial electronics markets.

The Company is subject to a number of risks including, among others, the volume and timing of orders received from customers, competitive pressures on selling prices, the demand for its products declining in the major end markets it serves, the inability to adequately protect or enforce its intellectual property rights, the volume and timing of orders placed by it with its wafer foundries and assembly subcontractors, the audit conducted by the Internal Revenue Service, which is asserting that it owes additional taxes relating to a number of items, incurred expenses related to stock-based compensation if required to change its assumptions used in the Black-Scholes model, required expenses incurred in connection with its litigation against Fairchild Semiconductor, System General Corporation and BCD, fluctuations in the exchange rate between the U.S. dollar and foreign currencies, the licensing of its intellectual property to one of its wafer foundries, the lengthy timing of its sales cycle, undetected defects and failures in meeting the exact specifications required by its products, reliance on its international sales activities which account for a substantial portion of net revenues, its ability to develop and bring to market new products and technologies on a timely basis, the ability of its products to penetrate additional markets, attraction and retention of qualified personnel in a competitive market, changes in environmental laws and regulations, earthquakes, terrorist acts or other disasters.

2. SUMMARY OF SIGNIFICANT ACCOUNTING POLICIES:

Principles of Consolidation

The consolidated financial statements include the accounts of the Company and its wholly owned subsidiaries after elimination of all intercompany transactions and balances.

Estimates

The preparation of financial statements in conformity with accounting principles generally accepted in the United States of America, GAAP, requires management to make estimates and assumptions that affect the reported amounts of assets and liabilities and disclosures of contingent assets and liabilities at the date of the financial statements and the reported amounts of revenues and expenses during the reporting period. Actual results could differ from those estimates. On an ongoing basis, the Company evaluates its estimates, including those related to revenue recognition and allowances for receivables and inventories. These estimates are based on historical facts and various other assumptions that the Company believes to be reasonable at the time the estimates are made.

Foreign Currency Translation

The functional currencies of the Company's subsidiaries are the local currencies. Accordingly, all assets and liabilities are translated into U.S. dollars at the current exchange rates as of the applicable balance sheet date. Revenues and expenses are translated at the average exchange rate prevailing during the period. Cumulative gains and losses from the translation of the foreign subsidiaries' financial statements have been included in stockholders' equity.

POWER INTEGRATIONS, INC.

NOTES TO CONSOLIDATED FINANCIAL STATEMENTS (Continued)

Cash and Cash Equivalents and Investments

The Company considers cash invested in highly liquid financial instruments with a remaining maturity of three months or less at date of purchase to be cash equivalents. Investments in highly liquid financial instruments with maturities greater than three months but not longer than twelve months from the balance sheet date are classified as short-term investments. Investments in highly liquid financial instruments with maturities greater than twelve months from the balance sheet date are classified as long-term investments. As of December 31, 2007 and 2006, the Company's short-term and long-term investments consisted of U.S. government backed securities, municipal bonds, corporate commercial paper and other high quality commercial securities, which were valued using the amortized cost method, which approximates fair market value. All investments are classified as held-to-maturity except auction rate securities which are classified as available-for-sale.

The table below summarizes the carrying value of the Company's investments by major security type (in thousands):

	December 31,	
	2007	2006
Cash Equivalents:		
Commercial paper	$ 93,888	$110,922
Total cash equivalents	93,888	110,922
Short-term Investments:		
U.S. corporate securities	83,820	6
U.S. government securities	2,000	2,500
Total short-term investments	85,820	2,506
Investments, matures in excess of 1 year	—	3,999
Total investment securities	$179,708	$117,427

Restricted Cash

The Company's restricted cash balance of $1.3 million at December 31, 2007 consists of an interest-bearing certificate of deposit at Union Bank of California. The certificate of deposit had interest at rates ranging from 3.55% to 4.64% and is renewed every 90 days. The current maturity for the certificate of deposit is July 28, 2008. The Company entered into a security agreement with the bank, whereby it agreed to maintain $1.3 million in an interest-bearing certificate of deposit with the bank. The certificate of deposit is restricted based on the bank's requirement that the Company maintain a restricted cash account in order to secure commercial letters of credit or standby letters of credit up to the deposit amount. This account is established in accordance with an agreement between the Company and the bank. As of December 31, 2007, there was one outstanding letter of credit totaling approximately $0.2 million. As of February 29, 2008, the Company's restricted cash amount was reduced to $0.3 million to adjust for a change in its outstanding letters of credit. This agreement remains in effect until cancellation of the Company's letters of credit.

POWER INTEGRATIONS, INC.

NOTES TO CONSOLIDATED FINANCIAL STATEMENTS (Continued)

Inventories

Inventories (which consist of costs associated with the purchases of wafers from offshore foundries and of packaged components from several offshore assembly manufacturers, as well as internal labor and overhead associated with the testing of both wafers and packaged components) are stated at the lower of cost (first in, first-out) or market. Provisions, when required, are made to reduce excess and obsolete inventories to their estimated net realizable values. Inventories consist of the following (in thousands):

	December 31,	
	2007	2006
Raw materials	$ 2,896	$ 7,869
Work-in-process	6,662	6,767
Finished goods	10,138	13,644
Total	$19,696	$28,280

Property and Equipment

Property and equipment consist of the following (in thousands):

	December 31,	
	2007	2006
Land	$ 16,453	$ 16,453
Building and improvements	25,453	25,200
Machinery and equipment	55,737	49,600
Office furniture and equipment	17,710	15,436
	115,353	106,689
Accumulated depreciation	(58,613)	(53,214)
Total	$ 56,740	$ 53,475

Depreciation and amortization expense of property and equipment for fiscal years ended 2007 and 2006 was approximately $7.5 million and $6.4 million, respectively, and was determined using the straight-line method over the following useful lives:

Building and improvements	4-40 years or life of lease agreement, if shorter
Machinery and equipment	2-5 years
Office furniture and equipment	4 years

Total property and equipment located in the United States at December 31, 2007, 2006 and 2005 were approximately 74%, 81% and 85%, respectively, of total property and equipment. Of the total property and equipment located in foreign countries, there was no individual country that held more than 10% of total property and equipment.

Goodwill and Intangible Assets

Goodwill of $1.8 million was recorded on the Company's balance sheet at December 31, 2007, in connection with its acquisition of Potentia Semiconductor Corporation. See Note 8 "Acquisition" in our notes to consolidated financial statements for details on the Company's acquisition, including the analysis performed to determine the goodwill amount of $1.8 million at December 31, 2007. Going forward, goodwill will be evaluated in accordance with SFAS No. 142, *Goodwill and Other Intangible Assets*, and an impairment analysis will be conducted on an annual basis, or sooner if the indicators exist for a potential impairment.

POWER INTEGRATIONS, INC.

NOTES TO CONSOLIDATED FINANCIAL STATEMENTS (Continued)

Intangible assets consist primarily of acquired licenses, patent rights and customer relationships, and are reported net of accumulated amortization. The Company amortizes the cost of intangible assets over the term of the acquired license or patent rights, or the expected life of customer relationships, which range from five to twelve years. As a result of the Company's acquisition of Potentia Semiconductor Corporation on December 31, 2007, the Company acquired developed technology for $1.1 million, which has a seven year useful life, and customer relationships for $0.5 million, which have a five year useful life. Amortization of intangible assets was approximately $0.8 million in 2007 and $0.7 million in 2006. We do not believe there is any significant residual value associated with the intangible assets:

	December 31, 2007			December 31, 2006		
	Gross	Accumulated Amortization	Net	Gross	Accumulated Amortization	Net
	(In thousands)					
Patent rights	$3,165	$ (1,339)	$1,826	$3,165	$ (978)	$2,187
Technology licenses	4,057	(780)	3,277	4,057	(375)	3,682
Developed technology	1,140	—	1,140	—	—	—
Other intangibles	37	(19)	18	37	(11)	26
Customer relationships	470	—	470	—	—	—
Total intangible assets	$8,869	$ (2,138)	$6,731	$7,259	$ (1,364)	$5,895

The estimated future amortization expense related to intangible assets at December 31, 2007 is as follows:

Fiscal Year	Estimated Amortization (in thousands)
2008	$ 1,031
2009	1,020
2010	985

2011	952
2012	764
Thereafter	1,979
Total	$ 6,731

Impairment of Long-Lived Assets

In accordance with SFAS No. 144, Accounting for the Impairment or Disposal of Long-Lived Assets, long-lived assets, such as property and equipment and intangible assets, are reviewed for impairment whenever events or changes in circumstances indicate that the carrying amount of an asset may not be recoverable. Recoverability of assets to be held and used is measured by a comparison of the carrying amount of an asset to estimate undiscounted future cash flows expected to be generated by the asset. If the carrying amount of an asset exceeds its estimated future cash flows, an impairment charge is recognized by the amount by which the carrying amount of the asset exceeds the fair value of the asset. Assets to be disposed of would be separately presented in the balance sheet and reported at the lower of the carrying amount or fair value less costs to sell, and would no longer be depreciated. The assets and liabilities of a disposed group classified as held for sale would be presented separately in the appropriate asset and liability sections of the balance sheet. Currently the Company has no impairment of long-lived assets nor any assets held for disposal.

POWER INTEGRATIONS, INC.

NOTES TO CONSOLIDATED FINANCIAL STATEMENTS (Continued)

Earnings Per Share

Basic earnings per share are calculated by dividing net income by the weighted-average shares of common stock outstanding during the period. Diluted earnings per share are calculated by dividing net income by the weighted-average shares of common stock and dilutive common equivalent shares outstanding during the period. Dilutive common equivalent shares included in the diluted calculation consist of dilutive shares issuable upon the exercise of outstanding common stock options and computed using the treasury stock method.

A summary of the earnings per share calculation is as follows (in thousands, except per share amounts):

	Year Ended December 31,		
	2007	2006	2005
Basic earnings per share:			
Net income	$26,624	$ 9,425	$15,698
Weighted-average common shares	28,969	29,059	29,568
Basic earnings per share	$ 0.92	$ 0.32	$ 0.53
Diluted earnings per share:			
Net income	$26,624	$ 9,425	$15,698
Weighted-average common shares	28,969	29,059	29,568
Effect of dilutive securities:			
Stock options	2,219	1,760	1,264
Employee stock purchase plan	66	—	11
Diluted weighted-average common shares	31,254	30,819	30,843
Diluted earnings per share	$ 0.85	$ 0.31	$ 0.51

Options to purchase 2,996,102, 3,554,345 and 1,969,496 shares of Company's common stock outstanding for the years ended December 31, 2007, 2006 and 2005, respectively, were not included in the computation of diluted

earnings per share. This was due to the exercise prices of these options to purchase shares of the Company's common stock being greater than the average market price of the Company's common stock during those periods, making their effect anti-dilutive.

Comprehensive Income

Comprehensive income consists of net income, plus the effect of foreign currency translation adjustments. The components of comprehensive income, net of taxes are as follows (in thousands):

	Year Ended December 31,		
	2007	2006	2005
Net income	$26,624	$9,425	$15,698
Other comprehensive income:			
Translation adjustments	81	125	(7)
Total comprehensive income	$26,705	$9,550	$15,691

POWER INTEGRATIONS, INC.

NOTES TO CONSOLIDATED FINANCIAL STATEMENTS (Continued)

Segment Reporting

The Company is organized and operates as one business segment, the design, development, manufacture and marketing of proprietary, high-voltage, analog integrated circuits for use primarily in the AC-DC and DC-DC power conversion markets. The Company's chief operating decision maker, the Chief Executive Officer, reviews financial information presented on a consolidated basis for purposes of making operating decisions and assessing financial performance.

Revenue Recognition, Significant Customers

Product revenues consist of sales to OEMs, merchant power supply manufacturers and distributors. Shipping terms to international OEMs and merchant power supply manufacturers from the Company's facility in California are "delivered at frontier," commonly referred to as DAF. As such, title to the product passes to the customer when the shipment reaches the destination country, and revenue is recognized upon the arrival of the Company's product in that country. Beginning in December 2005, shipping terms to the Company's international OEMs and merchant power supply manufacturers shipped from the Company's facilities outside of the United States are "EX Works" (EXW), meaning that title to the product transfers to the customer upon shipment from the Company's foreign warehouses. Shipments to North and South American OEMs and merchant power supply manufacturers are "FOB-point of origin" meaning revenue is recognized upon shipment, when the title is passed to the customer.

Sales to distributors are made under terms allowing certain rights of return and protection against subsequent price declines on the Company's products held by the distributors. As a result of these rights, the Company defers the recognition of revenue and the costs of revenues derived from sales to distributors until such distributors resell the Company's products to their customers. The Company determines the amounts to defer based on the level of actual inventory on hand at its distributors as well as inventory that is in transit to its distributors. The gross profit that is deferred as a result of this policy is reflected as "deferred income on sales to distributors" in the accompanying consolidated balance sheets.

Net revenue is reduced by estimated sales returns and allowances. The Company analyzes the following factors: historical returns, current economic trends, levels of inventories of the Company's products held by its customers, and changes in customer demand and acceptance of the Company's products and uses this information to review and determine the adequacy of the reserve. This reserve represents a reserve of the gross margin on estimated

future returns and is reflected as a reduction to accounts receivable in the accompanying consolidated balance sheets. Increases to the reserve are recorded as a reduction to net revenue equal to the expected customer credit memo and a corresponding credit is made to cost of revenues equal to the estimated cost of the returned product. The net difference, or gross margin, is recorded as an addition to the reserve.

Approximately 64% of the Company's net product sales were made to distributors in 2007. Frequently, distributors need to sell at a price lower than the standard distribution price in order to win business. After the distributor ships product to its customer, the distributor submits a "ship and debit" claim to the Company to adjust its cost from the standard price to the pre-approved lower price. After verification by the Company, a credit memo is issued to the distributor to adjust the sell-in price from the standard distribution price to the approved lower price. The Company maintains a reserve for these credits that appears as a reduction to accounts receivable in the Company's accompanying consolidated balance sheets. Any increase in the reserve results in a corresponding reduction in the Company's net revenues. To establish the adequacy of its reserves, the Company analyzes historical ship and debit payments and levels of inventory in the distributor channels.

From time to time the Company will reduce the distribution list price. As a result, the Company gives distributors protection, in the form of credits, against price declines on products they hold. The credits are referred to as "price protection." Since the Company does not recognize revenue until the distributor sells the product to its

customers, the Company generally does not need to provide reserves for price protection. However, in rare instances the Company must consider price protection in the analysis of reserve requirements, as there may be a timing gap between a price decline and the issuance of price protection credits. If a price protection reserve is required, the Company will maintain a reserve for these credits that appears as a reduction to accounts receivable in the Company's accompanying consolidated balance sheets. Any increase in the reserve results in a corresponding reduction in the Company's net revenues. The Company analyzes distribution price declines and levels of inventory in the distributor channels in determining the reserve levels required.

For the years ended December 31, 2007, 2006 and 2005, the Company's top ten customers, including distributors that resell the Company's products to OEMs and merchant power supply manufacturers, accounted for approximately 62%, 58% and 69% of net revenues, respectively.

The following distribution customers accounted for more than 10% of total net revenues:

	Year Ended December 31,		
Customer	2007	2006	2005
Avnet (formerly Memec)	23%	23%	19%
Synnex Technologies	—	—	18%

Export Sales

The Company markets its products in and outside of North and South America through its sales personnel and a worldwide network of independent sales representatives and distributors. As a percentage of total net revenues, export sales, which consist of domestic and foreign sales to distributors and direct customers outside of North and South America, are comprised of the following:

	Year Ended

	December 31,		
	2007	2006	2005
Hong Kong/China	41%	32%	24%
Korea	17%	20%	20%
Taiwan	14%	15%	27%
Western Europe	8%	10%	10%
Germany	6%	5%	4%
Japan	5%	5%	5%
Singapore	2%	3%	3%
Other	2%	3%	— %
Total export sales	95%	93%	93%

The remainder of the Company's sales are to customers within North and South America, primarily located in the United States, with some sales to customers located in Mexico and Brazil.

Product Sales

Sales of TOPSwitch and TinySwitch products accounted for 80%, 89% and 95% of total net revenues in 2007, 2006 and 2005, respectively. TOPSwitch products include TOPSwitch, TOPSwitch-II, TOPSwitch-FX, TOPSwitch-GX and TOPSwitch-HX. TinySwitch products include TinySwitch, TinySwitch-II, TinySwitch-III, TinySwitch-PK and PeakSwitch. Sales of the Company's Linkswitch product accounted for 18%, 9% and 5% of net revenues from product sales for the years ended December 31, 2007, 2006 and 2005, respectively. Linkswitch products include Linkswitch, Linkswitch-TN, Linkswitch-XT, Linkswitch-LP and Linkswitch-HF.

POWER INTEGRATIONS, INC.

NOTES TO CONSOLIDATED FINANCIAL STATEMENTS (Continued)

Revenue mix by product family is comprised of the following:

	Year Ended December 31,		
Product Family	2007	2006	2005
TinySwitch	52%	53%	57%
TOPSwitch	28%	36%	38%
LinkSwitch	18%	9%	5%
DPA-Switch	2%	2%	—

Revenue mix by end markets served is comprised of the following:

	Year Ended December 31,		
End Market	2007	2006	2005
Consumer	30%	32%	30%
Communications	27%	28%	29%
Computer	21%	19%	23%
Industrial electronics	15%	15%	11%
Other	7%	6%	7%

Foreign Currency Risk

The Company does not currently employ a foreign currency hedge program utilizing foreign currency forward exchange contracts. The Company maintains a Japanese yen bank account with a U.S. bank for payments to

suppliers and for cash receipts from Japanese suppliers and customers denominated in yen. For the years ended December 31, 2007, 2006 and 2005, the Company realized foreign exchange transaction losses of approximately $268,000, $236,000 and $167,000, respectively. These amounts are included in “other income (expense)” in the accompanying consolidated statements of income.

Warranty

The Company generally warrants that its products will substantially conform to the published specifications for 12 months from the date of shipment. The Company’s liability is limited to either a credit equal to the purchase price or replacement of the defective part. Returns under warranty have historically been immaterial, and as a result, the Company does not record a specific warranty reserve. Actual future returns could be different than the returns allowance established.

Advertising

Advertising costs are expensed as incurred. Advertising costs amounted to $1.0 million, $0.8 million, and $0.8 million, in 2007, 2006 and 2005, respectively.

Research and Development

Research and development costs are expensed as incurred.

Income Taxes

Income tax expense is an estimate of current income taxes payable or refundable in the current fiscal year based on reported income before income taxes. Deferred income taxes reflect the effect of temporary differences and carry-forwards that are recognized for financial reporting and income tax purposes. These deferred taxes are

measured by applying currently enacted tax laws. The Company recognizes valuation allowances, which reduce deferred tax assets to the amount that the Company estimates will be more likely than not realized, based upon available evidence and management judgment. The Company limits the deferred tax assets recognized related to certain stock based compensation of its officers to amounts that it estimates will be deductible in future periods based upon the provisions of the Internal Revenue Code Section 162(m). As of December 31, 2007, the Company had not recorded any valuation allowance against its deferred tax assets. In the event that the Company determines, based on available evidence and management judgment, that all or part of the net deferred tax assets will not be realized in the future, the Company would record a valuation allowance in the period the determination is made. In addition, the calculation of tax liabilities involves significant judgment in estimating the impact of uncertainties in the application of complex tax laws. Resolution of these uncertainties in a manner inconsistent with the Company’s expectations could have a material impact on its results of operations and financial position.

Stock-Based Compensation

Prior to January 1, 2006, the Company accounted for its share-based employee compensation plans under the measurement and recognition provisions of Accounting Principles Board Opinion (APB) No. 25, *Accounting for Stock Issued to Employees*, and related Interpretations, as permitted by Financial Accounting Standards Board Statement of Financial Accounting Standards (SFAS) No. 123, *Accounting for Stock-Based Compensation*. In accordance with SFAS No. 123, the Company disclosed its net income (loss) per share as if the Company had applied the fair value-based method in measuring compensation expense for its share-based incentive awards.

Effective January 1, 2006, the Company adopted the fair value recognition provisions of SFAS No. 123(R), *Share-Based Payment*, using the modified prospective transition method. Under that transition method, compensation expense that the Company recognizes beginning on that date includes expenses associated with the fair value of all awards granted on and after January 1, 2006, and expense for the unvested portion of previously granted awards outstanding on January 1, 2006. Results for prior periods have not been restated.

Determining Fair Value

The Company uses the Black-Scholes valuation method for valuing stock option grants using the following assumptions and estimates:

Expected Volatility. The Company calculates expected volatility as a weighted average of implied volatility and historical volatility.

Expected Life. The Company uses the simplified method to calculate the expected life of stock option grants, identified in Securities and Exchange Commission Staff Accounting Bulletin No. 107 ("SAB 107") for share-based awards granted. This method assumes all options will be exercised midway between the vesting date and the contractual term of the option.

Risk-Free Interest Rate. The Company bases the risk-free interest rate used in the Black-Scholes valuation method on the implied yield available on a U.S. Treasury note with a term equal to the expected term of the underlying grants.

Dividends. The Company has not paid dividends in the past, nor does it have any current plans to pay dividends. As such, the Company uses a dividend yield percentage of zero.

Estimated Forfeitures. The Company uses historical data to estimate pre-vesting option forfeitures, and records share-based compensation expense only for those awards that are expected to vest.

POWER INTEGRATIONS, INC.

NOTES TO CONSOLIDATED FINANCIAL STATEMENTS (Continued)

Fair Value of Financial Instruments

The estimated fair value of the Company's note to its supplier was approximately $9.9 million at December 31, 2007. The fair value was estimated using a pricing model incorporating current market rates. The note had a carrying cost of $10.0 million at December 31, 2007.

The carrying value of cash, cash equivalents, restricted cash, investments, excluding the Company's note to its supplier, accounts receivable, accounts payable and accrued liabilities approximate their fair values as of December 31, 2007 and 2006, because of the relatively short maturity of these instruments.

Concentration of Credit Risk

Financial instruments that potentially subject the Company to concentrations of credit risk consist principally of cash investments and trade receivables. The Company has cash investment policies that limit cash investments to low risk investments. With respect to trade receivables, the Company performs ongoing credit evaluations of its customers' financial condition and requires letters of credit whenever deemed necessary. Additionally, the Company establishes an allowance for doubtful accounts based upon factors surrounding the credit risk of specific customers, historical trends related to past losses and other relevant information. Account balances are charged off against the allowance after all means of collection have been exhausted and the potential for recovery is considered remote. The Company does not have any off-balance sheet credit exposure related to its customers. As of December 31, 2007 and 2006, approximately 66% and 67% of accounts receivable, respectively, were concentrated with ten customers.

As of December 31, 2007, no one customer accounted for 10% or more of the Company's accounts receivable. As of December 31, 2006, the Company had one distribution customer that represented 22% of accounts receivable and no other customer accounted for 10% or more of accounts receivable.

Indemnifications

The Company sells products to its distributors under contracts, collectively referred to as Distributor Sales Agreements ("DSA"). Each DSA contains the relevant terms of the contractual arrangement with the distributor, and generally includes certain provisions for indemnifying the distributor against losses, expenses, and liabilities from damages that may be awarded against the distributor in the event the Company's hardware is found to infringe upon a patent, copyright, trademark, or other proprietary right of a third party (Customer Indemnification). The DSA generally limits the scope of and remedies for the Customer Indemnification obligations in a variety of industry-standard respects, including, but not limited to, limitations based on time and geography, and a right to replace an infringing product. The Company also, from time to time, has granted a specific indemnification right to individual customers.

The Company believes its internal development processes and other policies and practices limit its exposure related to such indemnifications. In addition, the Company requires its employees to sign a proprietary information and inventions agreement, which assigns the rights to its employees' development work to the Company. To date, the Company has not had to reimburse any of its distributors or customers for any losses related to these indemnifications and no material claims were outstanding as of December 31, 2007. For several reasons, including the lack of prior indemnification claims and the lack of a monetary liability limit for certain infringement cases, the Company cannot determine the maximum amount of potential future payments, if any, related to such indemnifications.

Recently Issued Accounting Pronouncements

In September 2006, the FASB issued FAS No. 157, "Fair Value Measurements" ("FAS 157"). FAS 157 establishes a framework for measuring fair value in generally accepted accounting principles and expands disclosures about fair value measurements. FAS 157 applies under other previously issued accounting pronouncements that require

or permit fair value measurements but does not require any new fair value measurements. FAS 157 is effective for financial statements issued for fiscal years beginning after November 15, 2007, and interim periods within those fiscal years, and is required to be adopted by the Company in the first quarter of 2008, with the exception of all non-financial assets and liabilities, except those items recognized or disclosed at fair value on an annual or more frequently recurring basis, which will be effective for years beginning after November 15, 2008. The Company is currently evaluating the impact of FAS 157 on its consolidated financial statements.

In February 2007, the Financial Accounting Standards Board, or FASB issued SFAS No. 159, *The Fair Value Option for Financial Assets and Financial Liabilities—Including an amendment of FASB Statement No. 115* (SFAS No. 159). SFAS No. 159 expands the use of fair value accounting but does not affect existing standards, which require assets or liabilities to be carried at fair value. Under SFAS No. 159, the Company may elect to use fair value to measure accounts and loans receivable, available-for-sale and held-to-maturity securities, equity method investments, accounts payable, guarantees and issued debt. Other eligible items include firm commitments for financial instruments that otherwise would not be recognized at inception and non-cash warranty obligations where a warrantor is permitted to pay a third party to provide the warranty goods or services. If the use of fair value is elected, any upfront costs and fees related to the item must be recognized in earnings and cannot be deferred, e.g., debt issue costs. The fair value election is irrevocable and generally made on an instrument-by-instrument basis,

even if the Company has similar instruments that it elects not to measure based on fair value. At the adoption date, unrealized gains and losses on existing items for which fair value has been elected are reported as a cumulative adjustment to beginning retained earnings. SFAS No. 159 is effective for fiscal years beginning after November 15, 2007, and is required to be adopted by the Company in the first quarter of 2008. The Company is currently determining whether fair value accounting is appropriate for any of its eligible items and cannot estimate the impact, if any, that SFAS No. 159 will have on the Company's consolidated results of operations and financial condition.

In June 2007, the FASB ratified Emerging Issues Task Force (EITF) 06-11, *Accounting for Income Tax Benefits of Dividends on Share-Based Payment Awards* (EITF 06-11). EITF 06-11 requires that the tax benefits of dividends on unvested share-based payments be recognized in equity and be reclassified from additional paid-in capital to the income statement when the related award is forfeited or no longer expected to vest. EITF 06-11 is effective, on a prospective basis, for fiscal years beginning after December 15, 2007, and will be adopted by the Company in the first quarter of 2008. The Company is currently evaluating the impact of EITF 06-11.

In June 2007, the FASB ratified EITF 07-3, *Accounting for Non-Refundable Advance Payments for Goods or Services Received for Use in Future Research and Development Activities* (EITF 07-3). EITF 07-3 requires that nonrefundable advance payments for goods or services that will be used or rendered for future research and development activities be deferred and capitalized and recognized as an expense as the goods are delivered or the related services are performed. EITF 07-3 is effective, on a prospective basis, for fiscal years beginning after December 15, 2007 and will be adopted by the Company in the first quarter of 2008. The Company is currently evaluating the effect that the adoption of EITF 07-3 will have on its consolidated results of operations and financial condition.

In December 2007, the FASB issued SFAS No. 141 (revised 2007), *Business Combinations*, (SFAS 141R). SFAS 141R establishes principles and requirements for how an acquirer recognizes and measures in its financial statements the identifiable assets acquired, the liabilities assumed, any noncontrolling interest in the acquiree and the goodwill acquired. SFAS 141R also establishes disclosure requirements to enable the evaluation of the nature and financial effects of the business combination. SFAS 141R is effective for fiscal years beginning after December 15, 2008, and will be adopted by the Company in the first quarter of 2009. The Company is currently evaluating the potential impact, if any, of the adoption of SFAS 141R on its consolidated results of operations and financial condition.

POWER INTEGRATIONS, INC.

NOTES TO CONSOLIDATED FINANCIAL STATEMENTS (Continued)

In December 2007, the FASB issued SFAS No. 160, *Noncontrolling Interests in Consolidated Financial Statements—an amendment of Accounting Research Bulletin No. 51* (SFAS 160). SFAS 160 establishes accounting and reporting standards for ownership interests in subsidiaries held by parties other than the parent, the amount of consolidated net income attributable to the parent and to the noncontrolling interest, changes in a parent's ownership interest and the valuation of retained noncontrolling equity investments when a subsidiary is deconsolidated. SFAS 160 also establishes disclosure requirements that clearly identify and distinguish between the interests of the parent and the interests of the noncontrolling owners. SFAS 160 is effective as of the beginning of an entity's fiscal year that begins after December 15, 2008, and will be adopted by the Company in the first quarter of 2009. The Company is currently evaluating the potential impact, if any, of the adoption of SFAS 160 on its consolidated results of operations and financial condition.

During 2007, the Company adopted the following accounting pronouncements:

- Effective January 1, 2007, the Company adopted the provisions of Financial Accounting Standards Board Interpretation No. 48, *Accounting for Uncertainty in Income Taxes* ("FIN 48"). The information on the implementation of FIN 48 is set forth in Note 6.

- Effective January 1, 2007, the Company adopted the provisions of SFAS 158, *Employers Accounting for Defined Benefit Pension and Other Postretirement Plans—an amendment of FASB Statements No. 87, 88, 106, and 132(R)*, (SFAS 158). The adoption did not have a material impact on the Company's consolidated financial statements.

3. COMMITMENTS AND CONTINGENCIES:

From time to time the Company becomes involved in lawsuits, or customers and distributors may make claims against the Company. See Note 7 below. In accordance with SFAS No. 5, *Accounting for Contingencies*, the Company makes a provision for a liability when it is both probable that a liability has been incurred and the amount of the loss can be reasonably estimated.

Facilities—The Company owns its main executive, administrative, manufacturing and technical offices in San Jose, California.

The Company had no capital leasing arrangements as of December 31, 2007. At December 31, 2007 the Company had $16.4 million of non-cancelable purchase obligations, consisting primarily of inventory related items.

Future minimum lease payments under all non-cancelable operating lease agreements as of December 31, 2007 are as follows (in thousands):

Fiscal Year	
2008	$ 752
2009	371
2010	234
2011	86
2012	22
Thereafter	122
Total minimum lease payments	$1,587

Total rent expense amounted to $0.6 million, $0.5 million and $0.4 million in the years ended December 31, 2007, 2006 and 2005, respectively.

POWER INTEGRATIONS, INC.

NOTES TO CONSOLIDATED FINANCIAL STATEMENTS (Continued)

4. PREFERRED STOCK PURCHASE RIGHTS PLAN:

In February 1999, the Company adopted a Preferred Stock Purchase Rights Plan (the "Plan") designed to enable all stockholders to realize the full value of their investment and to provide for fair and equal treatment for all stockholders in the event that an unsolicited attempt is made to acquire the Company. Under the Plan, stockholders received one right to purchase one one-thousandth of a share of a new series of preferred stock for each outstanding share of common stock held at $150.00 per right, when someone acquires 15 percent or more of the Company's common stock or announces a tender offer which could result in such person owning 15 percent or more of the common stock. Each one one-thousandth of a share of the new preferred stock has terms designed to make it substantially the economic equivalent of one share of common stock. Prior to someone acquiring 15 percent, the rights can be redeemed for $0.001 each by action of the board of directors. Under certain circumstances, if someone acquires 15 percent or more of the common stock, the rights permit the stockholders, other than the acquirer, to purchase the Company's common stock having a market value of twice the exercise price of the rights, in lieu of the preferred stock. Alternatively, when the rights become exercisable, the board of directors may authorize the issuance of one share of common stock in exchange for each right that is then exercisable. The Company's Board of

Directors may, in its discretion, permit a stockholder to increase its ownership percentage to an amount in excess of 15 percent without triggering the provisions of the Plan, and has done so with respect to one investor, allowing that investor to acquire up to 20 percent of the Company's common stock without triggering the provisions of the Plan. In addition, in the event of certain business combinations, the rights permit the purchase of the common stock of an acquirer at a 50 percent discount. Rights held by the acquirer will become null and void in both cases. The rights expire on February 23, 2009.

5. STOCKHOLDERS' EQUITY:

Preferred Stock

The Company is authorized to issue 3,000,000 shares of $0.001 par value preferred stock, none of which were issued or outstanding during each of the three years ended December 31, 2007, 2006 and 2005.

Common Stock

As of December 31, 2007, the Company was authorized to issue 140,000,000 shares of $0.001 par value common stock.

On October 19, 2005, the Company announced that its board of directors had authorized a stock repurchase program of up to $25 million of the Company's common stock, with the repurchases to be made pursuant to Rule 10b5-1 of the Exchange Act. From inception of this repurchase plan through June 2006, the Company purchased a total of 1,334,216 shares for a total of approximately $25 million, concluding this repurchase program. After the conclusion of the repurchase plan in June 2006, there were no further repurchases through December 31, 2007. In January 2008, the Company's board of directors approved a third repurchase program, see Note 13, *Subsequent Events*, for further details.

1988 Stock Option Plan

In June 1988, the board of directors adopted the 1988 Stock Option Plan (the "1988 Plan"), whereby the board of directors may grant incentive stock options and non-qualified stock options to key employees, directors and consultants to purchase the Company's common stock. The exercise price of incentive stock options may not be less than 100% of the fair market value of the Company's common stock on the date of grant. The exercise price of non-qualified stock options may not be less than 85% of the fair market value of the Company's common stock on the date of grant. In general, options vest over either 48 or 50 months. Options generally have a

maximum term of ten years after the date of grant (five years if an incentive stock option is granted to a ten percent owner optionee), subject to earlier termination upon an optionee's cessation of employment or service. Effective July 1997, the board of directors determined that no further options would be granted under the 1988 Plan, but all outstanding options would continue to be governed and remain outstanding in accordance with their existing terms.

1997 Stock Option Plan

In June 1997, the board of directors adopted the 1997 Stock Option Plan (the "1997 Plan"), whereby the board of directors may grant incentive stock options and non-qualified stock options to key employees, directors and consultants to purchase the Company's common stock. The exercise price of incentive stock options may not be less than 100% of the fair market value of the Company's common stock on the date of grant. The exercise price of non-qualified stock options may not be less than 85% of the fair market value of the Company's common stock on the date of grant. The 1997 Plan originally provided that the number of shares reserved for issuance automatically increased on each January 1st, from January 1, 1999 through January 1, 2007, by 5% of the total number of shares of

common stock issued and outstanding on the last day of the preceding fiscal year. In January 2005, the board of directors amended the 1997 Plan to reduce the annual increase from 5% to 3.5%, so that the number of shares reserved for issuance automatically increases on each January 1st, from January 1, 2006 through January 1, 2007, by 3.5% of the total number of shares of common stock issued and outstanding on the last day of the preceding fiscal year. Effective November 2007, the board of directors determined that no further options would be granted under the 1997 Plan, and shares remaining available for issuance under the 1997 Plan, including shares subject to outstanding options under the 1997 Plan were transferred to the 2007 Equity Incentive Plan. All outstanding options would continue to be governed and remain outstanding in accordance with their existing terms.

1997 Outside Directors Stock Option Plan

In September 1997, the board of directors adopted the 1997 Outside Directors Stock Option Plan (the "Directors Plan"). A total of 800,000 shares of common stock have been reserved for issuance under the Directors Plan. The Directors Plan is designed to work automatically without administration; however, to the extent administration is necessary, it will be performed by the board of directors. The Directors Plan provides for the automatic grant of nonstatutory stock options to nonemployee directors of the Company over their period of service on the board of directors. The Directors Plan provides that each future nonemployee director of the Company will be granted an option to purchase 30,000 shares of common stock on the date on which such individual first becomes a nonemployee director of the Company (the "Initial Grant"). Thereafter, each nonemployee director who has served on the board of directors continuously for 12 months will be granted an additional option to purchase 10,000 shares of common stock (an "Annual Grant"). Subject to an optionee's continuous service with the Company, approximately 1/3rd of an Initial Grant will become exercisable one year after the date of grant and 1/36th of the Initial Grant will become exercisable monthly thereafter. Each Annual Grant will become exercisable in twelve equal monthly installments beginning in the 25th month after the date of grant, subject to the optionee's continuous service. The exercise price per share of all options granted under the Directors Plan is equal to the fair market value of a share of common stock on the date of grant. Options granted under the Directors Plan have a maximum term of ten years after the date of grant, subject to earlier termination upon an optionee's cessation of service. In the event of certain changes in control of the Company, all options outstanding under the Directors Plan will become immediately vested and exercisable in full.

1998 Nonstatutory Stock Option Plan

In July 1998, the board of directors adopted the 1998 Nonstatutory Stock Option Plan (the "1998 Plan"), whereby the board of directors may grant nonstatutory stock options to employees and consultants, but only to the extent that such options do not require approval of the Company's stockholders. The 1998 Plan has not been approved by the Company's stockholders. The exercise price of nonstatutory stock options may not be less than 85% of the fair market

value of the Company's common stock on the date of grant. As of December 31, 2007, the maximum number of shares that may be issued under the 1998 Plan was 1,000,000 shares. In general, options vest over 48 months. Options generally have a maximum term of ten years after the date of grant, subject to earlier termination upon an optionee's cessation of employment or service.

2007 Equity Incentive Plan

The 2007 Equity Incentive Plan (the "2007 Plan") was adopted by the board of directors on September 10, 2007 and approved by the stockholders on November 7, 2007 as an amendment and restatement of the 1997 Stock Option Plan (the "1997 Plan"). The 2007 Plan provides for the grant of incentive stock options, nonstatutory stock options, restricted stock awards, restricted stock unit awards, stock appreciation rights, performance stock awards and other stock awards to employees, directors and consultants. As of December 31, 2007, the maximum number of

shares that may be issued under the 2007 Plan was 10,800,539 shares, which consists of the shares remaining available for issuance under the 1997 Plan, including shares subject to outstanding options under the 1997 Plan. Pursuant to the 2007 Plan, the exercise price for incentive stock options and nonstatutory stock options is generally at least 100% of the fair market value of the underlying shares on the date of grant. Options generally vest over 48 months measured from the date of grant. Options generally expire no later than ten years after the date of grant, subject to earlier termination upon an optionee's cessation of employment or service.

The following table summarizes option activity under the Company's option plans (prices are weighted-average prices):

	Year Ended December 31,							
	2007				2006			
	Shares	Price	Weighted-average remaining contractual term	Aggregate Intrinsic Value in ($000)	Shares	Price	Weighted-average remaining contractual term	Aggregate Intrinsic Value in ($000)
Options outstanding, Beginning of year	8,491,530	$20.18			7,569,854	$19.09		
Granted at fair market value	1,246,347	$25.84			1,420,992	$24.80		
Exercised	(1,411,790)	$17.38			(293,501)	$14.45		
Cancelled	(139,863)	$23.40			(205,815)	$22.79		
Options outstanding, end of year	8,186,224	$21.57	6.10	$106,324	8,491,530	$20.18	6.10	$41,308
Vested and exercisable, end of year	5,840,966	$20.59	5.10	$ 81,887	5,980,620	$19.17	5.18	$34,913
Vested and expected to vest at end of year	7,856,918	$22.04	6.00	$102,853	8,170,325	$20.09	6.00	$40,501
Weighted-average fair value per option granted		$12.44				$13.20		

The weighted-average grant-date fair value of options granted for the twelve months ended December 31, 2007 and 2006 was $12.44 and $13.20, respectively. The total intrinsic value of options exercised during the twelve months ending December 31, 2007 and 2006 was $20.5 million and $3.4 million, respectively. During

POWER INTEGRATIONS, INC.

NOTES TO CONSOLIDATED FINANCIAL STATEMENTS (Continued)

2007 the Company extended the exercisable date for 80,000 fully vested share options held by one former director. As a result of the modification, the Company recognized additional compensation expense of approximately $25,000 for the year ended December 31, 2007.

Option activity was as follows for the fiscal year ended December 31, 2005:

	Shares	Price
Options outstanding, Beginning of year	6,689,279	$18.99
Granted:		
Below fair market value	138,668	$21.08

At fair market value	1,409,181	$18.14
Total granted	1,547,849	$18.40
Exercised	(414,070)	$13.29
Cancelled	(253,204)	$21.79
Options outstanding, end of year	7,569,854	$19.09
Vested and exercisable, end of year	4,950,914	$17.97
Weighted-average fair value per option granted below fair market value		$15.77
Weighted-average fair value per option granted at fair market value		$12.91

Options issued under the 1988, 1997 and 1998 plans may be exercised at any time prior to their expiration. The Company has a repurchase right that lapses over time, under which it has the right, upon termination of an optionholder's employment or service with the Company, at its discretion, to repurchase any unvested shares issued under the 1988, 1997 and 1998 plans at the original purchase price. Under the terms of the option plans, an option holder may not sell shares obtained upon the exercise of an option until the option has vested as to those shares. As of December 31, 2007, 2006 and 2005, there were no shares of common stock issued under the 1988, 1997 and 1998 plans that are subject to repurchase by the Company. Options issued under the Directors Plan are exercisable upon vesting.

The following table summarizes the stock options outstanding at December 31, 2007:

Options Outstanding				Options Vested and Exercisable	
Exercise Price	Number Outstanding	Weighted Average Remaining Contractual Term	Weighted Average Exercise Price	Number Vested	Weighted Average Exercise Price
$ 4.25—$12.10	701,199	3.16	$ 11.54	701,199	$ 11.54
$12.19—$16.13	1,123,903	3.77	$ 14.98	1,010,816	$ 14.88
$16.70—$19.73	2,167,505	6.02	$ 17.95	1,779,411	$ 18.02
$19.88—$22.25	292,524	6.68	$ 21.07	199,600	$ 21.02
$22.55—$24.83	405,092	5.77	$ 23.65	264,353	$ 23.62
$24.90—$26.75	2,024,102	8.78	$ 25.95	596,067	$ 26.28
$27.22—$29.74	984,257	6.14	$ 27.49	906,178	$ 27.43
$31.46—$36.88	405,067	5.37	$ 34.16	300,767	$ 35.07
$37.50—$44.75	80,300	2.06	$ 43.17	80,300	$ 43.17
$48.56—$51.50	2,275	1.90	$ 51.24	2,275	$ 51.24
$ 4.25—$51.50	8,186,224	6.10	$ 21.57	5,840,966	$ 20.59

POWER INTEGRATIONS, INC.

NOTES TO CONSOLIDATED FINANCIAL STATEMENTS (Continued)

1997 Employee Stock Purchase Plan

Under the 1997 Employee Stock Purchase Plan (the "Purchase Plan"), eligible employees may apply accumulated payroll deductions, which may not exceed 15% of an employee's compensation, to the purchase of shares of the Company's common stock at periodic intervals. The purchase price of stock under the Purchase Plan is equal to 85% of the lower of (i) the fair market value of the Company's common stock on the first day of each two-year offering period, or (ii) the fair market value of the Company's common stock on the semi-annual purchase date. If the fair market value of the Company's common stock on any semi-annual purchase date within a two-year offering period is less than the fair market value per share on the first day of such offering period, then immediately following purchase of shares of the Company's common stock on that semi-annual purchase date, participants will be automatically withdrawn from the offering period and enrolled in a new two-year offering period beginning immediately thereafter. An aggregate of 2,000,000 shares of common stock is reserved for issuance to employees under the Purchase Plan. As of December 31, 2007, 1,609,300 shares had been purchased and 390,700 shares were reserved for future issuance. In April 2006, the Company temporarily suspended the Purchase Plan due to the Company's delisted status with the NASDAQ. In August 2007, subsequent to completing all delinquent SEC filings, the Company was relisted with the NASDAQ. The Company then reestablished employee payroll deductions for the Employee Stock Purchase Plan. The share purchase for these deductions occurred in the first quarter of 2008.

Non-employee Stock Options

In 2007, 2006 and 2005, the Company granted no non-employee options. As of December 31, 2007, there were no non-employee options outstanding.

Shares Reserved

As of December 31, 2007, the Company had 3,897,768 shares of common stock reserved for future issuance under stock option and stock purchase plans.

Impact of the Adoption of SFAS No. 123(R)

Prior to January 1, 2006, the Company accounted for its share-based employee compensation plans under the measurement and recognition provisions of APB 25. The following table presents the functional allocation of all share-based compensation and related expense included in the Company's operating expense captions that the Company recorded for the year ended December 31, 2005 (in thousands):

	Year Ended December 31, 2005
Cost of sales	$ 405
Research and development	994
Sales and marketing	655
General and administrative	1,064
Total	$ 3,118

POWER INTEGRATIONS, INC.

NOTES TO CONSOLIDATED FINANCIAL STATEMENTS (Continued)

See Note 2, "Summary of Significant Accounting Policies," in the notes to consolidated financial statements for a description of the Company's adoption of SFAS No. 123(R) on January 1, 2006. The following table presents

the functional allocation of all share-based compensation and related expense included in the Company's operating expense captions that the Company recorded within the accompanying consolidated statements of income (in thousands):

	Year Ended December 31,	
	2007	2006
Cost of sales	1,268	$ 1,250
Research and development	3,829	4,329
Sales and marketing	4,620	5,506
General and administrative	3,548	4,375
Total	$ 13,265	$ 15,460

The Company recorded $13.3 million in pre-tax share-based compensation expenses, including expenses related to grants of stock options and purchase rights under the employee stock purchase plan during the year ended December 31, 2007. These expenses consisted of approximately $12.2 million related to stock options, $1.1 million related to our employee stock purchase plan, and approximately $21,000 for net amortized compensation expense associated with capitalized inventory costs. The Company recorded $15.5 million in pre-tax share-based compensation expenses, including expenses related to grants of stock options and purchase rights under the employee stock purchase plan during the year ended December 31, 2006. These expenses consisted of approximately $15.2 million related to stock options and $0.6 million related to our employee stock purchase plan, reduced by approximately $0.3 million for capitalized compensation expense.

As of December 31, 2007, there was $21.8 million of total unamortized compensation cost which includes estimated forfeitures related to non-vested share-based compensation arrangements granted under all equity compensation plans. Total unrecognized compensation cost will be adjusted for future changes in estimated forfeitures. The Company expects to recognize that cost over a weighted-average period of 2.29 years. As of December 31, 2007, the total compensation cost related to options, under the 1997 Stock Option Plan, to purchase the Company's common stock but not yet recognized was approximately $1.7 million. The Company will amortize this cost on a straight-line basis over periods of up to 0.6 years.

The Company received net proceeds of $24.6 million from option exercises during the year ended December 31, 2007.

The Company estimates the fair value of options granted using the Black-Scholes option valuation model. The Company estimates the expected volatility of its common stock at the date of grant based on a combination of its historical volatility and implied volatility, consistent with SFAS No. 123(R) and Securities and Exchange Commission Staff Accounting Bulletin No. 107 ("SAB 107"). The Company estimates expected term consistent with the simplified method identified in SAB 107 for share-based awards granted during the fiscal year ended December 31, 2007. The dividend yield assumption is based on historical dividend payouts. The risk-free interest rate assumption is based on observed interest rates appropriate for the expected term of its employee options. The Company uses historical data to estimate pre-vesting option forfeitures (at an estimated forfeiture rate of 8.4% for the year ended December 31, 2007) and records share-based compensation expense only for those awards that are expected to vest. For options granted, the Company amortizes the fair value on a straight-line basis over the requisite service period of the options that is generally four years.

The weighted-average fair value of options granted is estimated on the date of grant using the Black-Scholes option-pricing model with the following weighted-average assumptions used for share-based payment awards during the years ended December 31, 2007, 2006 and 2005:

	2007	2006	2005
Stock Options:			
Expected volatility	42%-49%	49%-52%	59%-85%
Risk-free interest rate	3.89%-4.78%	4.46%-5.00%	2.98%-4.49%
Expected life (in years)	6.03	6.03	6.03
Expected dividend yield	—	—	—

	2007	2006	2005
Employee Stock Purchase Plan:			
Expected volatility	36%	37%	47%
Risk-free interest rate	4.44%	4.44%	3.19%
Expected life (in years)	1.0	1.0	1.0
Expected dividend yield	—	—	—
Weighted-average estimated fair value of the purchase rights	$12.22	$6.81	$8.94

For the year ended December 31, 2005 the Company accounted for forfeitures under SFAS No. 123 based on actual forfeitures.

Under SFAS No. 123, the fair value of stock options at the date of grant is recognized in earnings over the vesting period of the options. Had compensation expense been determined under a fair value method consistent with SFAS No. 123 and related interpretations, the Company's net income would have been decreased to the following pro forma amount (in thousands, except per share information) for the year ended December 31, 2005.

	Year Ended December 31, 2005
Net income, as reported	$ 15,698
Add stock-based employee compensation expense included in reported net income, net of tax	2,383
Deduct total stock-based employee compensation expense determined under fair-value-based method for all awards, net of tax	(18,487)
Pro forma net loss	$ (406)
Basic earnings per share:	
As reported	$ 0.53
Pro forma	$ (0.01)
Diluted earnings per share:	
As reported	$ 0.51
Pro forma	$ (0.01)

6. TAXES:

Payroll taxes, interest and penalties—In connection with the stock-based compensation adjustments, the Company determined that certain options previously classified as Incentive Stock Option, or ISO, grants were determined to have been granted with an exercise price below the fair market value of the Company's stock on

the revised measurement date (see discussion under "Critical Accounting Policies" in Item 7). Under U.S. tax regulations, ISOs may not be granted with an exercise price less than the fair market value on the date of grant, and therefore these grants might not qualify for ISO tax treatment. The Company refers to these stock options as the "Affected ISOs." The potential disqualification of ISO status exposes the Company to additional payroll related withholding taxes on the exercise of these Affected ISOs granted to U.S. employees, and penalties and interest for failing to properly withhold taxes on exercise of those options. The payroll taxes, interest and penalties were recorded as expenses in the periods in which the underlying stock options were exercised. Then, in subsequent periods in which the liabilities were legally extinguished due to statutes of limitations, the payroll taxes, interest and penalties were reversed, and recognized as a reduction in the related functional expense category in the Company's consolidated statements of income. As of December 31, 2007 and 2006 the liability accrued for payroll taxes, interest and penalties totaled $0.7 million, $0.7 million, respectively.

Adoption of FIN 48

Effective January 1, 2007, we adopted the provisions of Financial Standards Accounting Board Interpretation No. 48, *Accounting for Uncertainty in Income Taxes* (FIN 48). Our liability for unrecognized tax benefits related to tax positions taken in prior periods is $13.2 million (excluding interest). Upon adoption of FIN 48, there was an adjustment made to retained earnings of $1.04 million. Additionally, we have classified the $13.2 million of FIN 48 liabilities as follows: $12.2 million from current taxes payable to non-current taxes payable and $1.0 million from current taxes payable to non-current deferred tax asset.

Upon adoption of FIN 48, our policy to include interest and penalties related to gross unrecognized tax benefits within our provision for income taxes did not change. As of December 31, 2007, we had accrued $1.71 million for payment of such interest and penalties, which is classified as non-current taxes payable. Interest and penalties included in our provision for income taxes was $0.8 million in the year-ended December 31, 2007.

Reconciliation of the Beginning and Ending Amount of Unrecognized Tax Benefits	
Unrecognized Tax Benefits Balance at January 1, 2007	$13,220
Gross Increases for Tax Positions of Prior Years	$ 5,896
Gross Decreases for Tax Positions of Prior Years	—
Settlements	—
Lapse of Statute of Limitations	—
Unrecognized Tax Benefits Balance at December 31, 2007	$19,116

Our total unrecognized tax benefits as of January 1, 2007 and December 31, 2007 was $13.2 million and $19.1 million, respectively. Also, our total unrecognized tax benefits that, if recognized, would affect our effective tax rate were $13.2 million and $19.1 million as of January 1, 2007 and December 31, 2007, respectively. The settlement period for our income tax liabilities cannot be determined; however, they are not expected to be due within the next twelve months.

Income Taxes

U.S. and foreign components of income (loss) before income taxes were (in thousands):

	Year Ended December 31,		
	2007	2006	2005
U.S. operations	$ 4,789	$(16,523)	$ 6,945
Foreign operations	29,762	26,281	15,206
Total pretax income	$34,551	$ 9,758	$22,151

POWER INTEGRATIONS, INC.

NOTES TO CONSOLIDATED FINANCIAL STATEMENTS (Continued)

Undistributed earnings of the Company's foreign subsidiaries of approximately $77.6 million at December 31, 2007, are considered to be indefinitely reinvested and, accordingly, no provision for Federal income taxes has been provided thereon. Upon distribution of those earnings in the form of dividends or otherwise, the Company would be subject to both U.S. income taxes (subject to an adjustment for foreign tax credits) and withholding taxes payable to various foreign countries.

The components of the provision for income taxes are as follows (in thousands):

	Year Ended December 31,		
	2007	2006	2005
Current provision:			
Federal	$ 9,041	$ 4,070	$ 6,798
State	(947)	493	199
Foreign	951	682	556
	9,045	5,245	7,553
Deferred provision (benefit):			
Federal	(2,070)	(3,866)	(942)
State	1,052	(1,009)	(158)
Foreign	(100)	(37)	—
	(1,118)	(4,912)	(1,100)
Total	$ 7,927	$ 333	$ 6,453

The Company is entitled to a deduction for Federal and state tax purposes with respect to employees' stock option activity. The net reduction in taxes otherwise payable in excess of any amount credited to income tax benefit has been credited to additional paid-in capital. For 2007, 2006 and 2005, the benefit arising from employee stock option activity that resulted in a credit to additional paid in capital was approximately $3.4 million, $0.2 million and $0.6 million, respectively.

The provision for income taxes differs from the amount, which would result by applying the applicable Federal income tax rate to income before provision for income taxes as follows:

	Year Ended December 31,		
	2007	2006	2005
Provision computed at Federal statutory rate	35.0%	35.0%	35.0%
State tax provision, net of Federal benefit	0.4	(7.1)	1.2
Research and development credits	(5.1)	(16.6)	(3.6)
Stock-based compensation	4.8	31.2	1.7
Foreign income taxed at different rate	(13.0)	(39.8)	(4.6)
Other	0.8	0.7	(0.6)
Total	22.9%	3.4%	29.1%

POWER INTEGRATIONS, INC.

NOTES TO CONSOLIDATED FINANCIAL STATEMENTS (Continued)

The components of the net deferred income tax asset were as follows (in thousands):

	December 31, 2007	December 31, 2006
Deferred Tax Assets		
Tax credit carry-forwards	$ 4,740	$ 5,708
Inventory reserves	549	563
Other reserves and accruals	2,659	1,435
Depreciation	938	837
Stock compensation	7,895	7,141
Acquired intangibles	22	—
	16,803	15,684
Deferred Tax Liability		
Foreign Taxes	(149)	—
Net deferred tax asset	$16,654	$15,684

In assessing the realizability of deferred tax assets, management considers whether it is more likely than not that some portion or all of the deferred tax assets will not be realized. The ultimate realization of deferred tax assets is dependent upon the generation of future taxable income during the periods in which those temporary differences become deductible. Management considers the scheduled reversal of deferred tax liabilities and projected future taxable income. The Company limits the deferred tax assets recognized related to certain highly-paid officers of the Company to amounts that it estimates will be deductible in future periods based upon the provisions of the Internal Revenue Code Section 162(m). Based upon the level of historical taxable income and projections for future taxable income over the periods in which the temporary differences are deductible, management believes it is more likely than not that the Company will realize the benefits of these deductible differences.

As of December 31, 2007, the Company had California research and development tax credit carryforwards of approximately $7.5 million. There is no expiration of research and development tax credit carryforwards for the State of California. As of December 31, 2007, the Company had Federal research and development tax credit carryforwards of approximately $2.1 million, which will expire in 2025, if unutilized.

Although we file U.S. Federal, U.S. state, and foreign tax returns, our major tax jurisdiction is the U.S. Our 2001—2006 tax years remain subject to examination by the IRS for U.S. Federal tax purposes. Currently, we are under examination by the IRS for our 2002 and 2003 tax years. There could be a significant change in the Company's uncertain tax benefits in the next twelve months depending on the outcome of the current IRS audit; however, the Company cannot reasonably estimate this amount.

The Company addressed the implications of Section 409A of the Internal Revenue Code by adjusting the exercise price of stock options deemed by the Company to have been granted at a discount from their fair market value. This resulted from the Company's determination that the measurement date for those options differed from the original date used as the measurement date for those options. Section 409A would have imposed significant additional taxes to the Company's employees on stock options granted with an exercise price lower than the fair market value on the date of grant that vest after December 31, 2004. The Internal Revenue Service has issued transition rules under Section 409A that allows for a correction, or cure, for options subject to Section 409A. The Company has allowed its current and former executive officers to amend their options to effect such a cure in 2006, and in the third quarter of 2007, the Company offered its employees who held outstanding options the opportunity

to effect a cure of all affected stock options. In connection with this cure, the Company will make cash bonus payments in an aggregate amount of approximately $0.8 million in 2008 to non-officer employees, which was reflected in accrued payroll and related expenses in the Company's consolidated balance sheet. The total bonus of $0.8 million was allocated between stock-based compensation expense ($0.4 million) and additional paid in capital ($0.4 million) in accordance with SFAS 123R. The stock-based compensation expense is included in cost of revenues and operating expenses in the accompanying statement of income for the year ended December 31, 2007.

7. LEGAL PROCEEDINGS:

On June 28, 2004, the Company filed a complaint for patent infringement in the U.S. District Court, Northern District of California, against System General Corporation (System General), a Taiwanese company, and its U.S. subsidiary. The complaint alleges that certain integrated circuits produced by System General infringed and continue to infringe certain of the Company's patents. The Company seeks, among other things, an order enjoining System General from infringing the Company's patents and an award for damages resulting from the alleged infringement. On June 10, 2005, in response to the initiation of the U.S. International Trade Commission ("ITC") investigation (discussed below), the District Court stayed all proceedings. Subsequent to the completion of the ITC proceedings, the District Court temporarily lifted the stay. On December 6, 2006, System General filed a notice of appeal of the ITC decision as discussed below. In response, and by agreement of the parties, the District Court renewed the stay of proceedings pending the outcome of the Federal Circuit appeal of the ITC determination.

On May 9, 2005, the Company filed a Complaint with the ITC under section 337 of the Tariff Act of 1930, as amended, 19 U.S.C. section 1337. The Company filed a supplement to the complaint on May 24, 2005. The Company alleged infringement of its patents pertaining to pulse width modulation ("PWM") integrated circuit devices, which are used in power conversion applications such as power supplies for computer monitors. The Commission instituted an investigation on June 8, 2005 in response to the Company's complaint. Systems General Corporation filed a response to the ITC complaint asserting that the patents-in-suit were invalid and not infringed. The Company subsequently and voluntarily narrowed the number of patents and claims in suit, which proceeded to a hearing. The hearing on the investigation was held before the Administrative Law Judge ("ALJ") from January 18 to January 24, 2006. Post-hearing briefs were submitted and briefing concluded February 24, 2006. The ALJ's initial determination was issued on May 15, 2006. The ALJ found all remaining asserted claims valid and infringed, and recommended the exclusion of the infringing products as well as certain downstream products that contain the infringing products. After further briefing, on June 30, 2006 the Commission decided not to review the initial determination on liability, but did invite briefs on remedy, bonding and the public interest. On August 11, 2006 the Commission issued an order excluding from entry into the United States the infringing Systems General PWM chips, and any LCD computer monitors, AC printer adapters and sample/demonstration circuit boards containing an infringing System General chip. The U.S. Customs Service is authorized to enforce the exclusion. On October 11, 2006, the presidential review period expired without any action from the president, and the ITC exclusion order is now in full effect. On December 6, 2006 System General filed a notice of appeal of the ITC decision. Briefing was completed on July 23, 2007, and oral argument was heard by the U.S. Court of Appeals for the Federal Circuit on November 9, 2007. On November 19, 2007, the Federal Circuit affirmed the ITC's findings in all respects. Because System General did not file a petition for rehearing or rehearing en banc or petition the Supreme Court for certiorari within the time required to do so, the ITC decision is now final.

On October 20, 2004, The Company filed a complaint against Fairchild Semiconductor International, Inc. and Fairchild Semiconductor Corporation (referred to collectively as "Fairchild") in the United States District Court for the District of Delaware. In its complaint, the Company alleged that Fairchild has and is infringing four Power Integrations' patents pertaining to PWM integrated circuit devices. Fairchild denied infringement and asked for a declaration from the court that it does not infringe any Power Integration patent and that the patents

are invalid. The Court held a claim construction hearing on February 2, 2006, and issued a claim construction order on March 31, 2006 which was favorable to the Company. The Court set a first trial on the issues of infringement, willfulness and damages for October 2, 2006. At the close of the first trial, on October 10, 2006, the jury returned a verdict in favor of the Company finding all asserted claims of all four patents-in-suit to be willfully infringed by Fairchild and awarding $33,981,781 in damages. Although the jury awarded damages, and the Company will request the damages to be enhanced in view of the jury's finding on willfulness, at this stage of the proceedings the Company cannot state the amount, if any, which it might ultimately recover from Fairchild, and no benefits have been recorded in the Company's consolidated financial statements as a result of the damages award. Fairchild raised defenses contending that the asserted patents are invalid or unenforceable, and the court held a second trial on these issues beginning on September 17, 2007. On September 21, 2007, the jury returned a verdict in favor of the Company, affirming the validity of the asserted claims of all four patents-in-suit. Fairchild submitted further materials on the issue of enforceability along with various other post-trial motions, and the Court will address those issues along with the Company's motions seeking increased damages and attorneys fees, an accounting and interest on the damages award and a permanent injunction, in the coming months. Briefing on these various issues was completed on January 16, 2008, but the Court has not yet scheduled any hearing.

On April 11, 2006, Fairchild Semiconductor Corporation and Intersil Corporation filed a patent infringement lawsuit against the Company in the U.S. District Court for the Eastern District of Texas. The complaint asserted that the Company infringed on an old Intersil patent that Fairchild recently secured exclusive rights to assert against the Company but Fairchild and Intersil did not identify any specific products they believe infringe the patent. Fairchild and Intersil's lawsuit was flawed because both Fairchild and Intersil lacked standing to sue the Company and it was also duplicative of a portion of the Company's suit against Fairchild in Delaware, and the Company therefore filed a motion addressing both issues. The Texas Court granted the Company's motion to transfer the case to Delaware on March 6, 2007, and the case was transferred to Delaware and assigned to Judge Farnan, the presiding judge in the Fairchild case discussed above. The Company then renewed its motion to dismiss the case for lack of standing, the Court held a hearing on October 5, 2007, and the Court dismissed, without prejudice, Fairchild and Intersil's case against the Company on December 20, 2007. Fairchild and Intersil did not appeal the Court's dismissal within the time provided for such an appeal.

On June 14, 2007, the Company filed a complaint for patent infringement in the U.S. District Court, Northern District of California, against Shanghai SIM-BCD Semiconductor Manufacturing Limited, a Chinese company, and its U.S. sister corporation, BCD Semiconductor Corporation (referred to collectively as "BCD"). The complaint alleged that certain integrated circuits produced by BCD infringe certain of the Company's patents, seeking, among other things, an order enjoining BCD from infringing its patents and an award for damages resulting from the alleged infringement. The Company voluntarily dismissed the California case against BCD on October 15, 2007 and filed a substantially identical complaint against BCD in the United States District Court for the District of Delaware on October 15, 2007. On January 21, 2008, BCD moved to dismiss the Delaware action for lack of personal jurisdiction in favor of a declaratory judgment action it filed against the Company on the same patents in the U.S. District Court, Northern District of California, discussed in further detail below. Briefing on this motion is complete. On January 25, 2008, the Company moved for a preliminary injunction against further sales of the accused BCD products based on infringement of one of the three patents in suit. BCD's opposition to the motion is due on April 7, 2008, and the Company's reply is due April 28, 2008. The Court has set a hearing for the Company's motion for preliminary injunction and BCD's motion to dismiss on May 5, 2008.

On January 18, 2008, Shanghai SIM-BCD Semiconductor Manufacturing Limited, a Chinese company, and its U.S. sister corporation, BCD Semiconductor Corporation (collectively, "BCD") filed a complaint in the U.S. District Court, Northern District of California seeking a declaratory judgment of non-infringement and invalidity

with respect to the three patents the Company asserted against BCD in the Delaware action discussed above. The Company has not yet answered the complaint, but BCD has stated that it will dismiss the California case in favor of the Delaware action if it does not prevail in its motion to dismiss the Delaware action.

On April 25, 2006, Kimberly Quaco, an alleged shareholder, filed a derivative complaint in the United States District Court for the Northern District of California, purportedly on behalf of Power Integrations, against certain of Power Integrations' current and former executives and members of its board of directors relating to the Company's historical stock option granting practices. On August 1, 2006, Kathryn L. Champlin, another alleged shareholder, filed a similar derivative complaint in the United States District Court for the Northern District of California purportedly on behalf of Power Integrations. On September 21, 2006, Christopher Deboskey, another alleged shareholder, filed a similar derivative suit in the United States District Court for the Northern District of California purportedly on behalf of Power Integrations. On November 30, 2006, Ms. Champlin voluntarily dismissed her suit. On December 18, 2006, the Court appointed Ms. Quaco's counsel as lead counsel and ordered that another purported shareholder, Mr. Geoffrey Wren, be substituted in as lead plaintiff. On January 17, 2007, the plaintiffs filed their consolidated complaint. On August 3, 2007, plaintiffs filed an amended consolidated complaint. The amended consolidated complaint alleges, among other things, that the defendants breached their fiduciary duties by improperly backdating stock option grants in violation of Power Integrations' shareholder approved stock option plans, improperly recording and accounting for the backdated options, improperly taking tax deductions based on the backdated options, and disseminating false financial statements that improperly recorded the backdated option grants. The amended consolidated complaint asserts claims for, among other things, breach of fiduciary duty, unjust enrichment, and violations of Section 10(b) of the Securities Exchange Act of 1934. On January 30, 2008, the parties agreed to settle the dispute. The settlement is subject to court approval. On February 1, 2008, plaintiffs filed a motion for preliminary approval of the settlement, and a hearing was scheduled for March 24, 2008.

On May 26, 2006, Stanley Banko, an alleged shareholder, filed a derivative complaint in the Superior Court of California, Santa Clara County, purportedly on behalf of Power Integrations, against certain of the Company's current and former executives and members of Power Integrations' board of directors relating to its historical stock option granting practices. On May 30, 2006, Joan Campbell, also an alleged shareholder, filed a derivative suit in the Superior Court of California, Santa Clara County, making the identical allegations asserted in the Banko lawsuit. On June 30, 2006, pursuant to a stipulation by the parties, the Court consolidated the two cases into a single proceeding and required plaintiffs to file an amended, consolidated complaint. Plaintiffs filed their consolidated complaint on August 14, 2006, in which plaintiffs named additional officers and former officers and KPMG LLP, Power Integrations' former auditor, as new defendants. The consolidated complaint alleges, among other things, that the defendants caused or allowed Power Integrations' executives to manipulate their stock option grant dates, that defendants improperly backdated stock option grants, and that costs associated with the stock option grants were not properly recorded in Power Integrations' financial statements. The complaint asserts claims for, among other things, insider trading, breach of fiduciary duty, gross mismanagement and unjust enrichment. On January 30, 2008, the parties agreed to settle the dispute. On February 28, 2008, the parties submitted a stipulation to the Court requesting that the action be stayed pending the final order approving the settlement and entry of the final order and judgment in the Quaco Action.

On May 23, 2006, the U.S. Attorney's Office for the Northern District of California, or the DOJ, issued a grand jury subpoena to the Company directing that it produce documents relating to the granting of stock options from 1995 through the present. Subsequently, the government made a number of requests for the Company to voluntarily produce documents relating to, among other things, the Company's stock option practices. The government also conducted voluntary interviews of certain current and former officers and employees. The Company cooperated fully with the DOJ. The SEC was also conducting an investigation, but the Company has recently been informed by the staff of the SEC that they have terminated the investigation and are not recommending enforcement action be taken against it.

POWER INTEGRATIONS, INC.

NOTES TO CONSOLIDATED FINANCIAL STATEMENTS (Continued)

The Internal Revenue Service, or IRS, is conducting an audit of the Company's 2002 and 2003 tax returns. The IRS has issued a number of Notices of Proposed Adjustment to these returns. Among other things, the IRS has challenged several aspects of the Company's research and development cost-sharing arrangement, which was put into place on November 1, 2003. While the Company has agreed to some of the adjustments proposed by the IRS, it disputes other proposed adjustments.

There can be no assurance that the Company will prevail in its litigation with System General, Fairchild or BCD. This litigation, whether or not determined in the Company's favor or settled, will be costly and will divert the efforts and attention of the Company's management and technical personnel from normal business operations, potentially causing a material adverse effect on its business, financial condition and operating results. In addition, the Company is unable to predict the outcome of the other legal proceedings described above. Adverse determinations in litigation could result in monetary losses, the loss of the Company's proprietary rights, subject the Company to significant liabilities, require the Company to seek licenses from third parties or prevent the Company from licensing its technology, any of which could have a material adverse effect on the Company's business, financial condition and operating results.

8. ACQUISITION:

On December 31, 2007, the Company acquired Potentia Semiconductor Corporation, or Potentia, for cash consideration of approximately $5.5 million, including closing costs. The Company used the purchase method of accounting. Since the acquisition date occurred on December 31, 2007, no results of operations for Potentia were included in the Company's 2007 statement of operating income.

The Company allocated the purchase price of the acquisition to tangible assets, liabilities and intangible assets acquired, including in-process research & development charges, based on their estimated fair values. The excess purchase price over those fair values was recorded as goodwill. The fair value assigned to assets acquired is based on valuations using management's estimates and assumptions. The Company does not expect goodwill recorded as a result of this acquisition to be deductible for tax purposes.

Potentia is a developer of innovative controller chips for high-power AC-DC power supplies. Potentia's engineering team, based in Ottawa, Canada, will form the core of a new analog design group for Power Integrations focused primarily on high-power applications.

The Company's supplemental pro forma operating results are presented below as if the acquisition of Potentia had been completed on January 1, 2006 (in 000):

	Year ended December 31,					
	2007			2006		
	(Unaudited)					
	As reported	Adjustment for Potentia	Pro forma income data including Potentia	As reported	Adjustment for Potentia	Pro forma income data including Potentia
Net revenue	$191,043	$ 439	$191,482	$162,403	$ 462	$162,865
Income before extraordinary item(a)	34,551	(600)	33,951	9,758	(3,131)	6,627
Net income	$ 26,624	$ (565)	$ 26,059	$ 9,425	$ (3,085)	$ 6,340
Earnings per share:						
Basic	$ 0.92	$ (0.02)	$ 0.90	$ 0.32	$ (0.10)	$ 0.22
Diluted	$ 0.85	$ (0.02)	$ 0.83	$ 0.31	$ (0.10)	$ 0.21

POWER INTEGRATIONS, INC.

NOTES TO CONSOLIDATED FINANCIAL STATEMENTS (Continued)

(a) The unaudited pro forma supplemental information is based on estimates and assumptions, which we believe are reasonable; it is not necessarily indicative of our consolidated financial position or results of income in future periods or the results that actually would have been realized had we been a combined company during the periods presented. The adjustments for Potentia in 2007 consist primarily of Potentia's operating results, net of; (1) the reversal of an in-process R&D charge, now reflected in 2006, (2) adjustments to payroll and related expenses to reflect the number of employees hired as a result of the acquisition, (3) stock-based compensation charges for those employees and (4) amortization of the above mentioned intangibles. The adjustments for Potentia in 2006 consist primarily of Potentia's operating results, net of; (1) the impact of an in-process R&D charge, (2) adjustments to payroll and related expenses to reflect the number of employees hired as a result of the acquisition, (3) stock-based compensation charges for those employees and (4) amortization of the above mentioned intangibles.

The aggregate purchase price was approximately $5.5 million, including closing costs. Of that amount, $0.5 million remains in an indemnity escrow account. Per the terms of the purchase agreement $0.5 million will remain in such escrow account for any damages incurred in connection with the transactions contemplated by the purchase agreement directly or indirectly by any indemnitees or to which any of the indemnitees may otherwise directly or indirectly become subject for a period of 12 months.

The following table summarizes the estimated fair values of the assets acquired and liabilities assumed at the date of the acquisition (in thousands).

	December 31, 2007
Current assets	$ 801
Property, plant and equipment, net of accumulated depreciation	46
Intangible assets:	
Goodwill	1,824
Amortizable intangible assets	1,610
In process research and development	1,370
Total intangible assets	4,804
Total assets acquired	5,651
Current liabilities	42
Long-term deferred taxes	149
Total liabilities assumed	190
Net assets acquired	$ 5,461

Of the $1.6 million of amortizable intangible assets, $1.1 million was assigned to developed technology, with an estimated useful life of 7 years, and $0.5 million was assigned to customer relationships with an estimated useful life of 5 years. The in process research and development of $1.4 million was written off at December 31, 2007, and is reflected in operating expenses, under *in process research and development*, in the consolidated statement of income.

The purchase agreement included two of Potentia's building leases; the buildings are located in Ontario Canada, and include a lab, and research and development and office space. The total lease payments for 2008, 2009, 2010 and 2011 are approximately $0.1 million for each of the years mentioned.

POWER INTEGRATIONS, INC.

NOTES TO CONSOLIDATED FINANCIAL STATEMENTS (Continued)

9. LOAN TO SUPPLIER:

On August 30, 2005, the Company entered into a loan agreement with one of its suppliers to fund the implementation of new technology. The principal amount of the loan was $10.0 million. The unpaid principal and interest is due on December 31, 2009. The loan is convertible into equity of the supplier upon certain conditions at the discretion of the Company. The interest rate will follow the one-year Treasury bill rate, and be reset at each anniversary of the closing date of the loan agreement. The loan principal is reflected in "Loan Receivable" in the accompanying consolidated balance sheet.

10. PREPAYMENT TO A SUPPLIER TO SECURE WAFER MATERIAL:

In August 2006, the Company entered into a wafer supply agreement amendment with its foundry, XFAB, which amends its previous agreement dated May 2003. The amended agreement includes a prepayment of $2.3 million to XFAB to enable them to secure raw materials from their supplier. The Company included the remaining prepayment of $0.6 million in "prepaid expenses and other current assets" in its December 31, 2007 consolidated balance sheet.

11. DISTRIBUTOR PRICING CREDIT RECOVERY:

In April 2006, the Company recorded $3.4 million in revenue related to a settlement agreement negotiated with one of its distributors. The Company performed an audit of distributor pricing credit requests, and discovered discrepancies in the supporting documentation the distributor supplied during such audit. In April 2006, this distributor reimbursed the Company $3.4 million for discrepant credit requests. The Company subsequently cancelled its distribution relationship with this customer in the second quarter of 2006.

12. SELECTED QUARTERLY INFORMATION (Unaudited)

The following tables set forth certain data from the Company's consolidated statements of income for each of the quarters in the years ended December 31, 2007 and 2006.

The unaudited quarterly consolidated financial statements have been prepared on the same basis as the audited consolidated financial statements contained herein and include all adjustments that the Company considers necessary for a fair presentation of such information when read in conjunction with the Company's annual audited consolidated financial statements and notes thereto appearing elsewhere in this report. The operating results for any quarter are not necessarily indicative of the results for any subsequent period or for the entire fiscal year.

	Three Months Ended							
	Dec. 31, 2007	Sept. 30, 2007	June 30, 2007	Mar. 31, 2007	Dec. 31, 2006	Sept. 30, 2006	June 30, 2006	Mar. 31, 2006(1)
	(unaudited) (in thousands, except per share data)							
Net revenues	$52,680	$49,806	$43,240	$45,317	$41,281	$44,404	$41,465	$35,253
Gross profit	28,019	26,397	23,952	25,117	22,109	24,049	24,106	18,345
Net income (loss)	$ 6,588	$ 6,753	$ 6,777	$ 6,506	$ 3,037	$ 2,661	$ 4,506	$ (779)
Earnings (loss) per share								
Basic	$ 0.22	$ 0.23	$ 0.24	$ 0.23	$ 0.11	$ 0.09	$ 0.15	$ (0.03)
Diluted	$ 0.20	$ 0.22	$ 0.22	$ 0.21	$ 0.10	$ 0.09	$ 0.15	$ (0.03)
Shares used in per share calculation								

Basic	29,741	28,789	28,674	28,660	28,658	28,650	29,356	29,582
Diluted	32,269	31,342	30,942	30,691	30,656	29,832	30,955	29,582

(1) For the three months ended March 31, 2006, the Company had a net loss. Diluted net loss per share is the same as basic net loss per share since the effects of potentially dilutive securities were anti-dilutive for the quarter-ended March 31, 2006.

POWER INTEGRATIONS, INC.

NOTES TO CONSOLIDATED FINANCIAL STATEMENTS (Continued)

13. SUBSEQUENT EVENTS

In February 2008, the Company's board of directors authorized the use of up to $50 million for the repurchase of the Company's common stock. Repurchases will be executed according to certain pre-defined price/volume guidelines set by the board of directors. Stock repurchases for this program commenced in February 2008, and there is no expiration date for this stock repurchase program.

SCHEDULE II

Valuation and Qualifying Accounts

The Company maintains an allowance for doubtful accounts for estimated losses resulting from the inability of customers to make required payments. This allowance is established using estimates formulated by the Company's management based upon factors such as the composition of the accounts receivable aging, historical bad debts, changes in payments patterns, customer creditworthiness, and current economic trends. Following is a summary of the activity in the allowance for doubtful accounts:

Classification (in thousands)	Balance at Beginning of Period	Charged to Costs and Expenses	Deductions(1)	Balance at End of Period
Allowances for doubtful accounts:				
Year ended December 31, 2005	$ 281	$ 67	$ (7)	$ 341
Year ended December 31, 2006	$ 341	$ 79	$ (57)	$ 363
Year ended December 31, 2007	$ 363	$ (86)	$ (16)	$ 261

Classification (in thousands)	Balance at Beginning of Period	Charged to Costs and Expenses	Deductions(1)	Balance at End of Period
Allowances for customer returns:				
Year ended December 31, 2005	$ 101	$ 525	$ (498)	$ 128
Year ended December 31, 2006	$ 128	$ 341	$ (305)	$ 164
Year ended December 31, 2007	$ 164	$ 38	$ (77)	$ 125

Classification	Balance at	Charged to	Deductions(1)	Balance at

(in thousands)	Beginning of Period	Costs and Expenses		End of Period
Allowances for ship and debit credits:				
Year ended December 31, 2005	$ 2,492	$ 20,006	$ (18,762)	$ 3,736
Year ended December 31, 2006	$ 3,736	$ 48,956	$ (44,488)	$ 8,204
Year ended December 31, 2007	$ 8,204	$ 59,160	$ (57,643)	$ 9,721

(1) Deductions relate to amounts written off against the allowances for doubtful accounts, customer returns and ship and debit credits.

LXXXVI. Table of Contents

SIGNATURES

Pursuant to the requirements of Section 13 or 15(d) of the Securities Exchange Act of 1934, the registrant has duly caused this Report to be signed on its behalf by the undersigned, thereunto duly authorized.

POWER INTEGRATIONS, INC.

Dated: March 7, 2008

By: /s/ RAFAEL TORRES
Rafael Torres
Chief Financial Officer

LXXXVII. Table of Contents

POWER OF ATTORNEY

KNOW ALL PERSONS BY THESE PRESENTS, that each person whose signature appears below constitutes and appoints Balu Balakrishnan and Rafael Torres his true and lawful attorney-in-fact and agent, with full power of substitution and, for him and in his name, place and stead, in any and all capacities to sign any and all amendments to this Report on Form 10-K, and to file the same, with all exhibits thereto and other documents in connection therewith, with the Securities and Exchange Commission, granting unto said attorney-in-fact and agent full power and authority to do and perform each and every act and thing requisite and necessary to be done in connection therewith, as fully to all intents and purposes as he might or could do in person, hereby ratifying and confirming all that said attorney-in-fact and agent, or his substitute or substitutes, may lawfully do or cause to be done by virtue hereof.

PURSUANT TO THE REQUIREMENTS OF THE SECURITIES EXCHANGE ACT OF 1934, THIS REPORT HAS BEEN SIGNED BY THE FOLLOWING PERSONS ON BEHALF OF THE REGISTRANT AND IN THE CAPACITIES AND ON THE DATES INDICATED.

Dated: March 7, 2008

By: /s/ BALU BALAKRISHNAN
Balu Balakrishnan
President, Chief Executive Officer
(Principal Executive Officer)

Dated: March 7, 2008

By: /s/ RAFAEL TORRES
Rafael Torres

		Chief Financial Officer (Principal Financial and Principal Accounting Officer)
Dated: March 6, 2008	By:	/s/ ALAN D. BICKELL **Alan D. Bickell Director**
Dated: March 7, 2008	By:	/s/ NICHOLAS E. BRATHWAITE **Nicholas E. Brathwaite Director**
Dated: March 7, 2008	By:	/s/ R. SCOTT BROWN **R. Scott Brown Director**
Dated: March 7, 2008	By:	/s/ E. FLOYD KVAMME **E. Floyd Kvamme Director**
Dated: March 7, 2008	By:	/s/ STEVEN J. SHARP **Steven J. Sharp Director and Chairman of the Board**
Dated: March 7, 2008	By:	/s/ BALAKRISHNAN S. IYER **Balakrishnan S. Iyer Director**
Dated: March 6, 2008	By:	/s/ JAMES FIEBIGER **James Fiebiger Director**

LXXXVIII. Table of Contents

POWER INTEGRATIONS, INC.

INDEX TO EXHIBITS
TO
FORM 10-K ANNUAL REPORT

For the Year Ended
December 31, 2007

EXHIBIT NUMBER	DESCRIPTION
3.1	Restated Certificate of Incorporation. (As filed with the SEC as Exhibit 3.1 to our Annual Report on Form 10-K on March 16, 1999, SEC File No. 000-23441.)
3.2	Certificate of Amendment to Restated Certificate of Incorporation. (As filed with the SEC as Exhibit 3.3 to our Annual Report on Form 10-K on March 22, 2002, SEC File No. 000-23441.)
3.3	Form of Certificate of Designation, Preferences and Rights of the Terms of the Series A Preferred Stock filed as Exhibit A to the Form of Rights Agreement between us and BankBoston N.A., dated February 24, 1999. (As filed with the SEC as Exhibit 1 to our Current Report on Form 8-K on March 12, 1999, SEC File No. 000-23441.)
3.4	Certificate of Amendment to Certificate of Incorporation (As filed with the SEC as the like described exhibit to our Current Report on Form 8-K on November 9, 2007, SEC File No. 000-23441.)
3.5	Amended and Restated Bylaws. (As filed with the SEC as Exhibit 3.2 to our Current Report on Form 8-K on November 9, 2007, SEC File No. 000-23441.)
4.1	Reference is made to Exhibits 3.1 to 3.5.
4.2	Fifth Amended and Restated Rights Agreement by and among us and certain of our investors,

	dated April 27, 1995. (As filed with the SEC as Exhibit 4.1 to Amendment No. 1 to our Registration Statement on Form S-1 on October 21,1997, SEC File No. 000-23441.)
4.3	Investor's Rights Agreement between us and Hambrecht & Quist Transition Capital, LLC, dated as of May 22, 1996. (As filed with the SEC as Exhibit 4.2 to our Registration Statement on Form S-1 on September 11, 1997, SEC File No. 000-23441.)
4.4	Rights Agreement between us and BankBoston N.A., dated as of February 24, 1999. (As filed with the SEC as Exhibit 1 to our Current Report on Form 8-K on March 12, 1999, SEC File No. 000-23441.)
4.5	Amendment to Rights Agreement between us and BankBoston N.A., dated as of October 9, 2001. (As filed with the SEC as Exhibit 4.3 to our Quarterly Report on Form 10-Q on November 9, 2001, SEC File No. 000-23441.)
10.1	Form of Indemnity Agreement for directors and officers. (As filed with the SEC as Exhibit 10.1 to our Registration Statement on Form S-1 on September 11, 1997, SEC File No. 000-23441.)*
10.2	1988 Stock Option Plan and forms of agreements thereunder. (As filed with the SEC as Exhibit 10.2 to our Registration Statement on Form S-1 on September 11, 1997, SEC File No. 000-23441.)*
10.3	1997 Stock Option Plan (as amended through January 25, 2005) (as filed with the SEC as Exhibit 10.5 to our Quarterly Report on Form 10-Q on May 6, 2005).*
10.4	1997 Outside Directors Stock Option Plan (as amended through June 6, 2000) (as filed with the SEC as Annex C to our Proxy Statement on April 27, 2000) and forms of agreements thereunder- (as filed with the SEC as Exhibit 10.4 to our Registration Statement on Form S-1 on September 11, 1997, SEC File No. 000-23441).*

EXHIBIT NUMBER	DESCRIPTION
10.5	1997 Employee Stock Purchase Plan (as amended through June 6, 2000) (as filed with the SEC as Annex B to our Proxy Statement on April 27, 2000) and forms of agreements thereunder (as filed with the SEC as Exhibit 10.5 to our Registration Statement on Form S-1 on September 11, 1997, SEC File No. 000-23441).*
10.6	1998 Nonstatutory Stock Option Plan. (As filed with the SEC as Exhibit 10.30 to our Quarterly Report on Form 10-Q on May 12, 2003, SEC File No. 000-23441.)*
10.7	Chief Executive Officer Benefits Agreement between us and Balu Balakrishnan, dated April 25, 2002. (As filed with the SEC as Exhibit 10.14 to our Quarterly Report on Form 10-Q on May 10, 2002, SEC File No. 000-23441.)*
10.8	Executive Officer Benefits Agreement between us and Derek Bell, dated April 25, 2002. (As filed with the SEC as Exhibit 10.15 to our Quarterly Report on Form 10-Q on May 10, 2002, SEC File No. 000-23441.)*
10.9	Executive Officer Benefits Agreement between us and Bruce Renouard, dated April 25, 2002. (As filed with the SEC as Exhibit 10.17 to our Quarterly Report on Form 10-Q on May 10, 2002, SEC File No. 000-23441.)*
10.10	Executive Officer Benefits Agreement between us and John Tomlin, dated April 25, 2002. (As filed with the SEC as Exhibit 10.19 to our Quarterly Report on Form 10-Q on May 10, 2002,

SEC File No. 000-23441.)*

10.11 Executive Officer Benefits Agreement between us and Clifford J. Walker, dated April 25, 2002. (As filed with the SEC as Exhibit 10.20 to our Quarterly Report on Form 10-Q on May 10, 2002, SEC File No. 000-23441.)*

10.12 Loan Agreement between us and Union Bank of California, N.A., dated as of October 16, 1998. (As filed with the SEC as Exhibit 10.23 to our Annual Report on Form 10-K on March 16, 1999, SEC File No. 000-23441.)

10.13 First Amendment to Loan Agreement dated October 16, 1998 between us and Union Bank of California, N.A., dated August 1, 2000. (As filed with the SEC as Exhibit 10.29 to our Quarterly Report on Form 10-Q on November 14, 2000, SEC File No. 000-23441.)

10.14 Wafer Supply Agreement among us and Matsushita Electronics Corporation and Matsushita Electric Industry Co., Ltd., dated as of June 29, 2000. (As filed with the SEC as Exhibit 10.27 to our Quarterly Report on Form 10-Q on November 14, 2000, SEC File No. 000-23441.)

10.15 Technology License Agreement between us and Matsushita Electronics Corporation, dated as of June 29, 2000. (As filed with the SEC as Exhibit 10.28 to our Quarterly Report on Form 10-Q on November 14, 2000, SEC File No. 000-23441.)

10.16 Purchase Agreement among us, SPI HO II Associates, L.P., SPI/TSA Arrowhead, LLC, SPI/TSA Chula Vista L.P. and SPI/Braintree Unit 5 Limited Partnership, dated as of April 21, 2003. (As filed with the SEC as Exhibit 10.33 to our Quarterly Report on Form 10-Q on August 7, 2003, SEC File No. 000-23441.)

10.17 Amended and Restated Wafer Supply Agreement between us and OKI Electric Industry Co., Ltd., dated as of April 1, 2003. (As filed with the SEC as Exhibit 10.31 to our Quarterly Report on Form 10-Q on August 7, 2003, SEC File No. 000-23441.)†

10.18 Wafer Supply Agreement between us and ZMD Analog Mixed Signal Services GmbH & CoKG, dated as of May 23, 2003. (As filed with the SEC as Exhibit 10.32 to our Quarterly Report on Form 10-Q on August 7, 2003, SEC File No. 000-23441.)†

XC. **Table of Contents**

EXHIBIT NUMBER	DESCRIPTION
10.19	Wafer Supply Agreement between us and Matsushita Electric Industrial Co., Ltd., effective as of June 29, 2005. (As filed with the SEC as Exhibit 10.21 to our Current Report on Form 8-K on July 26, 2005, SEC File No. 000-23441.)†
10.20	2007 cash bonus awards (As in our Current Report on Form 8-K filed with the SEC on February 8, 2008, SEC File No. 000-23441.)*
10.21	Agreement to make a one-time payment of $25,000 to each member of the Special Committee. (As filed with the SEC in our Current Report on Form 8-K on March 27, 2006, SEC File No. 000-23441.)*
10.22	Cash Compensation for Non-Employee Directors (As filed with the SEC as the like numbered exhibit to our Annual Report on Form 10-K on March 8, 2007, SEC File No. 000-23441.)*
10.23	Amendment Number One to the Amended and Restated Wafer Supply Agreement between us and OKI Electric Industry Co., Ltd., effective as of August 11, 2004. (As filed with the SEC as Exhibit 10.22 to our Current Report on Form 8-K on April 18, 2006, SEC File No. 000-23441.)†

10.24	Confidential Resignation Agreement and General Release of Claims between us and John Cobb, dated June 15, 2006. (As filed with the SEC as Exhibit 10.1 to our Current Report on Form 8-K on June 20, 2006, SEC File No. 000-23441.)*
10.25	Offer Letter, dated June 30, 2006, between us and Rafael Torres. (As filed with the SEC as Exhibit 10.1 to our Current Report on Form 8-K on July 17, 2006, SEC File No. 000-23441.)*
10.26	Amendment to Offer Letter, dated July 6, 2006, between us and Rafael Torres. (As filed with the SEC as Exhibit 10.2 to our Current Report on Form 8-K on July 17, 2006, SEC File No. 000-23441.)*
10.27	Letter Agreement and accompanying election form regarding officer stock option amendments in connection with Section 409A cure, executed December 15, 2006, between us and Balu Balakrishnan.(As filed with the SEC as the like numbered exhibit to our Annual Report on Form 10-K on March 8, 2007, SEC File No. 000-23441.)*
10.28	Letter Agreement and accompanying election form regarding officer stock option amendments in connection with Section 409A cure, executed December 18, 2006, between us and Derek Bell. (As filed with the SEC as the like numbered exhibit to our Annual Report on Form 10-K on March 8, 2007, and amended as described in Item 5.02 of our Current Report on Form 8-K filed with the SEC on September 10, 2007, SEC File No. 000-23441.)*
10.29	Letter Agreement and accompanying election form regarding officer stock option amendments in connection with Section 409A cure, executed December 22, 2006, between us and Bruce Renouard.(As filed with the SEC as the like numbered exhibit to our Annual Report on Form 10-K on March 8, 2007, SEC File No. 000-23441.)*
10.30	Letter Agreement and accompanying election form regarding officer stock option amendments in connection with Section 409A cure, executed December 21, 2006, between us and John Tomlin.(As filed with the SEC as the like numbered exhibit to our Annual Report on Form 10-K on March 8, 2007, SEC File No. 000-23441.)*
10.31	Letter Agreement and accompanying election form regarding officer stock option amendments in connection with Section 409A cure, executed December 21, 2006, between us and Clifford J. Walker.(As filed with the SEC as the like numbered exhibit to our Annual Report on Form 10-K on March 8, 2007, SEC File No. 000-23441.)*
10.32	Acknowledgment and Waiver regarding stock option agreements, dated February 20, 2007, between us and Alan Bickell.(As filed with the SEC as the like numbered exhibit to our Annual Report on Form 10-K on March 8, 2007, SEC File No. 000-23441.)*

XCI. Table of Contents

EXHIBIT NUMBER	DESCRIPTION
10.33	Acknowledgment and Waiver regarding stock option agreements, dated February 20, 2007, between us and Nicholas Brathwaite.(As filed with the SEC as the like numbered exhibit to our Annual Report on Form 10-K on March 8, 2007, SEC File No. 000-23441.)*
10.34	Acknowledgment and Waiver regarding stock option agreements, dated February 20, 2007, between us and R. Scott Brown.(As filed with the SEC as the like numbered exhibit to our Annual Report on Form 10-K on March 8, 2007, SEC File No. 000-23441.)*
10.35	Amendment No. 1 to Nonstatutory Stock Option Agreements for Outside Directors, dated February 20, 2007, between us and Alan Bickell.(As filed with the SEC as the like numbered exhibit to our Annual Report on Form 10-K on March 8, 2007, SEC File No. 000-23441.)*

10.36	Amendment No. 1 to Nonstatutory Stock Option Agreements for Outside Directors, dated February 20, 2007, between us and Nicholas Brathwaite.(As filed with the SEC as the like numbered exhibit to our Annual Report on Form 10-K on March 8, 2007, SEC File No. 000-23441.)*
10.37	Amendment No. 1 to Nonstatutory Stock Option Agreements for Outside Directors, dated February 20, 2007, between us and R. Scott Brown.(As filed with the SEC as the like numbered exhibit to our Annual Report on Form 10-K on March 8, 2007, SEC File No. 000-23441.)*
10.38	2007 Equity Incentive Plan, and amendment and restatement of the 1997 Stock Option Plan (As filed with the SEC as the like described exhibit to our Current Report on Form 8-K on February 4, 2008, SEC File No. 000-23441.)*
10.39	2007 Executive Officer Cash Compensation Arrangements (As described in Item 5.02 of our Current Report on Form 8-K filed with the SEC on June 8, 2007, SEC File No. 000-23441.)*
10.40	Forms of Option Agreements under the 1997 Stock Option Plan with Executive Officers in connection with the Chief Executive Officer Benefits Agreement and the Executive Officer Benefits Agreements. (As filed with the SEC as the like described exhibit to our Annual Report on Form 10-K on August 8, 2007, SEC File No. 000-23441.)*
10.41	Forms of Option Agreements under the 1997 Stock Option Plan. (As filed with the SEC as the like described exhibit to our Annual Report on Form 10-K on August 8, 2007, SEC File No. 000-23441.)*
10.42	Letter agreement, dated as of August 31, 2007, between Power Integrations, Inc. and Derek Bell. (As filed with the SEC as the like described exhibit to our Quarterly Report on Form 10-Q on November 9, 2007, SEC File No. 000-23441.)*
10.43	Amended and Restated Chief Executive Officer Benefits Agreement, dated as of August 8, 2007, and entered into August 15, 2007, between Power Integrations, Inc. and Balu Balakrishnan. (As filed with the SEC as the like described exhibit to our Quarterly Report on Form 10-Q on November 9, 2007, SEC File No. 000-23441.)*
10.44	Amendment to Executive Officer Benefits Agreement, dated as of August 8, 2007, and entered into August 15, 2007, between Power Integrations, Inc. and Bruce Rouard. (As filed with the SEC as the like described exhibit to our Quarterly Report on Form 10-Q on November 9, 2007, SEC File No. 000-23441.)*
10.45	Amendment to Executive Officer Benefits Agreement, dated as of August 8, 2007, and entered into August 15, 2007, between Power Integrations, Inc. and John Tomlin. (As filed with the SEC as the like described exhibit to our Quarterly Report on Form 10-Q on November 9, 2007, SEC File No. 000-23441.)*
10.46	Amendment to Executive Officer Benefits Agreement, dated as of August 8, 2007, and entered into August 15, 2007, between Power Integrations, Inc. and Cliff Walker. (As filed with the SEC as the like described exhibit to our Quarterly Report on Form 10-Q on November 9, 2007, SEC File No. 000-23441.)*

EXHIBIT NUMBER	DESCRIPTION
10.47	Executive Officer Benefits Agreement, dated as of August 8, 2007, and entered into August 15, 2007, between Power Integrations, Inc. and Rafael Torres. (As filed with the SEC as the like

	described exhibit to our Quarterly Report on Form 10-Q on November 9, 2007, SEC File No. 000-23441.)*
10.48	Amendment to Executive Officer Benefits Agreement, dated as of August 8, 2007, and entered into August 15, 2007, between Power Integrations, Inc. and Doug Bailey. (As filed with the SEC as the like described exhibit to our Quarterly Report on Form 10-Q on November 9, 2007, SEC File No. 000-23441.)*
10.49	Amendment to Executive Officer Benefits Agreement, dated as of August 8, 2007, and entered into August 15, 2007, between Power Integrations, Inc. and Derek Bell. (As filed with the SEC as the like described exhibit to our Quarterly Report on Form 10-Q on November 9, 2007, SEC File No. 000-23441.)*
14.1	Code of Business Conduct and Ethics (As filed with the SEC as the like described exhibit to our Current Report on Form 8-K on February 4, 2008, SEC File No. 000-23441.)
21.1	List of subsidiaries.
23.1	Consent of Independent Registered Public Accounting Firm
24.1	Power of Attorney (See signature page).
31.1	Certification of Chief Executive Officer pursuant to Section 302 of the Sarbanes-Oxley Act of 2002.
31.2	Certification of Chief Financial Officer pursuant to Section 302 of the Sarbanes-Oxley Act of 2002.
32.1	Certification of Chief Executive Officer pursuant to Section 906 of the Sarbanes-Oxley Act of 2002.**
32.2	Certification of Chief Financial Officer pursuant to Section 906 of the Sarbanes-Oxley Act of 2002.**

All references in the table above to previously filed documents or descriptions are incorporating those documents and descriptions by reference thereto.

---

† This Exhibit has been filed separately with the Commission pursuant to an application for confidential treatment. The confidential portions of this Exhibit have been omitted and are marked by an asterisk.

* Indicates a management contract or compensatory plan or arrangement.

** The certifications attached as Exhibits 32.1 and 32.2 accompany this Annual Report on Form 10-K, are not deemed filed with the SEC, and are not to be incorporated by reference into any filing of Power Integrations, Inc. under the Securities Act of 1933, as amended, or the Securities Exchange Act of 1934, as amended, whether made before or after the date of this Form 10-K, irrespective of any general incorporation language contained in such filing.

EXHIBIT C
(Power Integrations, Inc.’s Investor Presentation)

POWER INTEGRATIONS®

INNOVATION IN POWER CONVERSION



EcoSmart®

Unique Play in Analog Semiconductors



The Market Leader

High-Voltage
Power Conversion ICs



POWI is the only company focused exclusively on monolithic high-voltage power conversion ICs

POWER INTEGRATIONS

Proprietary High-Voltage Technology



High-Voltage MOSFET



Low-Voltage Controller



The Old Way – Discrete Components

Proprietary High-Voltage Technology

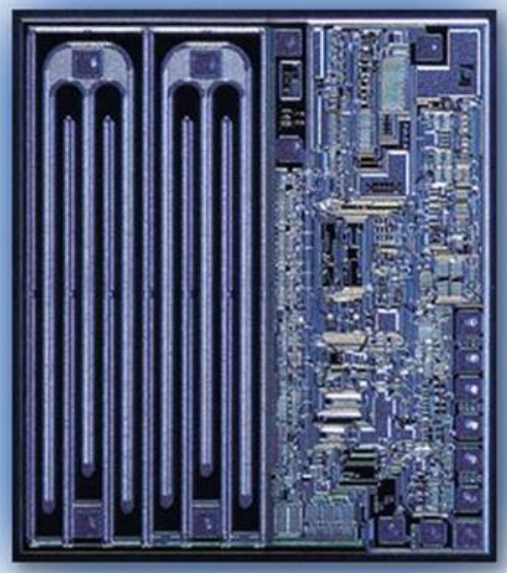

The Power Integrations Approach:

Monolithic High-Voltage Integrated Circuits



Our Opportunity



Power supplies have been slow to adopt semiconductor integration



Enabling Highly Integrated Power Supplies

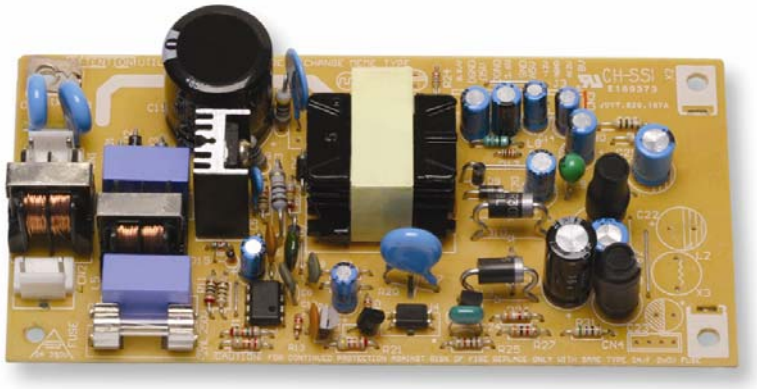

DVD power supply using >65 discrete components

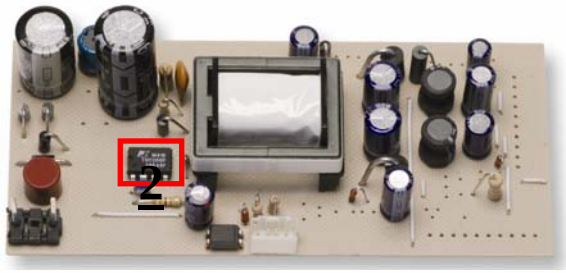

DVD power supply with POWI: < 40 components

Linear adapter: weighs 12 oz.





Adapter with POWI: weighs 2 oz.



POWI Replaces Both Linear and Discrete Technologies

Cost-Effective Integration

Discrete design: 70-75 components

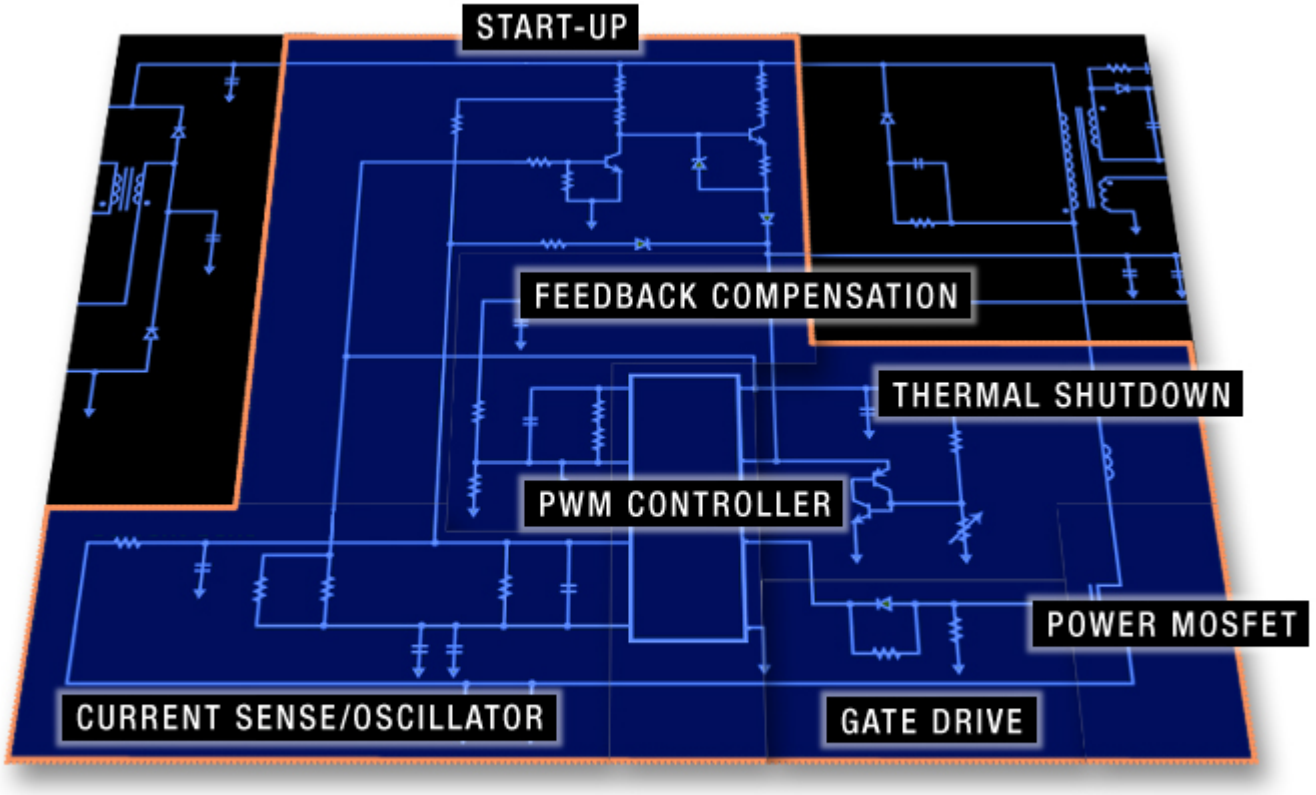

36-watt adapter circuit diagram



Cost-Effective Integration

Highly integrated design: 20-25 components

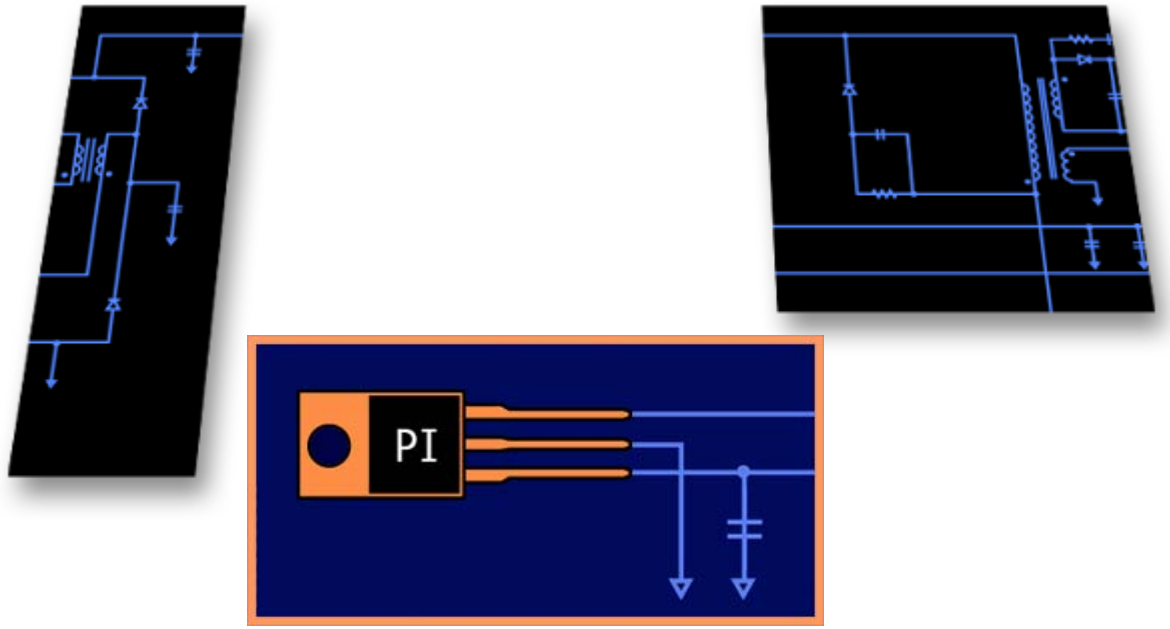

36-watt adapter circuit diagram

Evolution of AC-to-DC Power Supplies

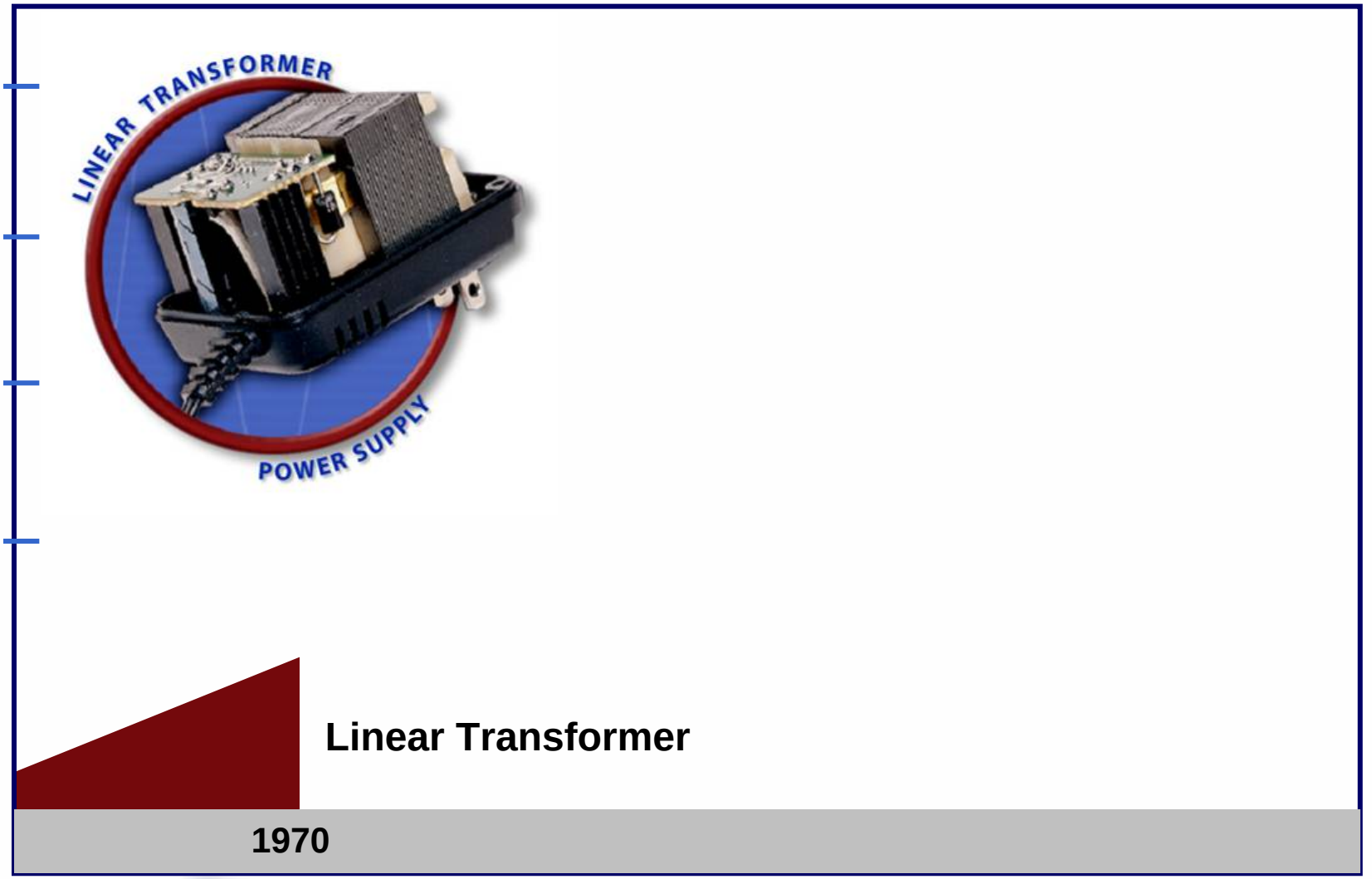

Evolution of AC-to-DC Power Supplies

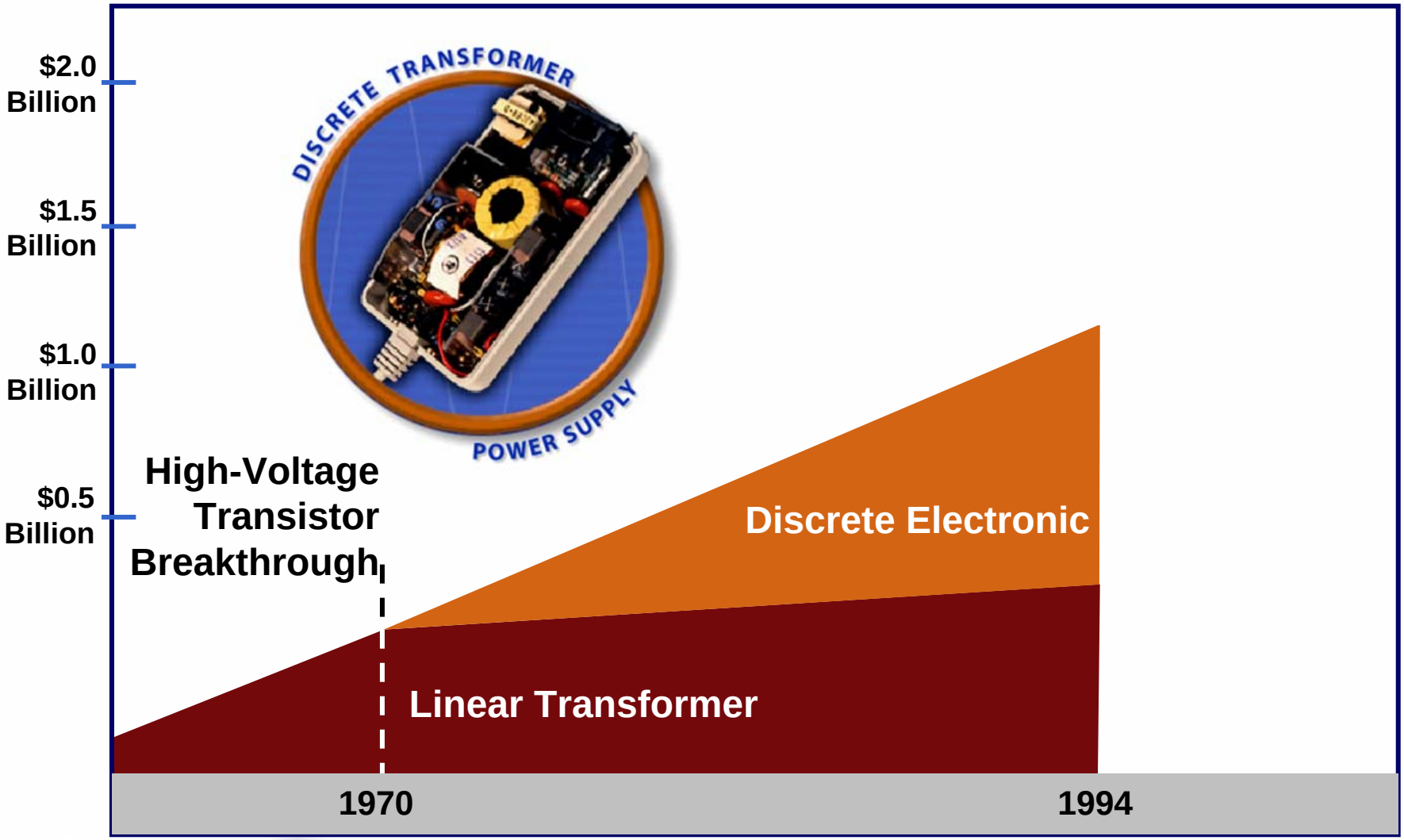

Evolution of AC-to-DC Power Supplies

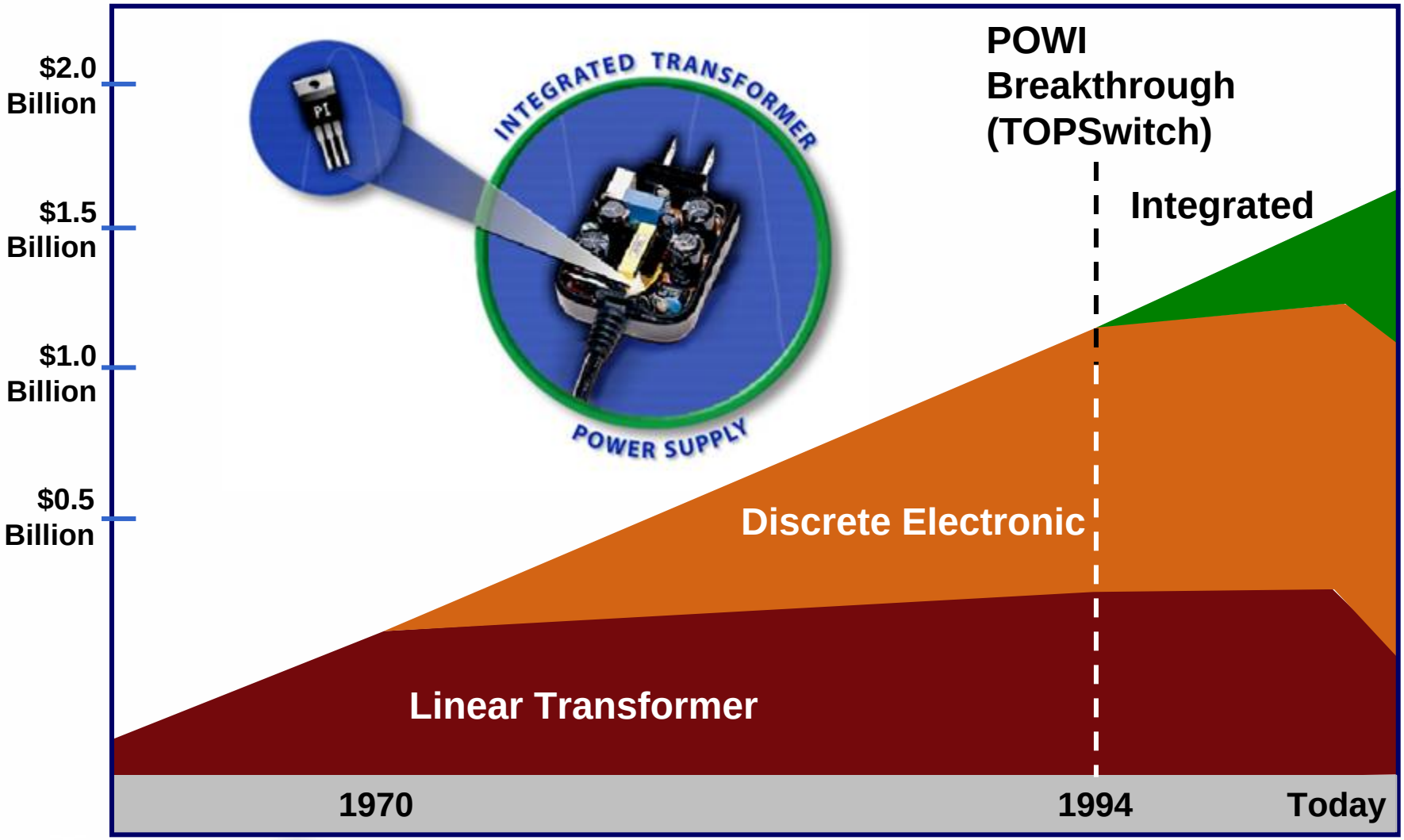

Clear Leader in Integrated Market

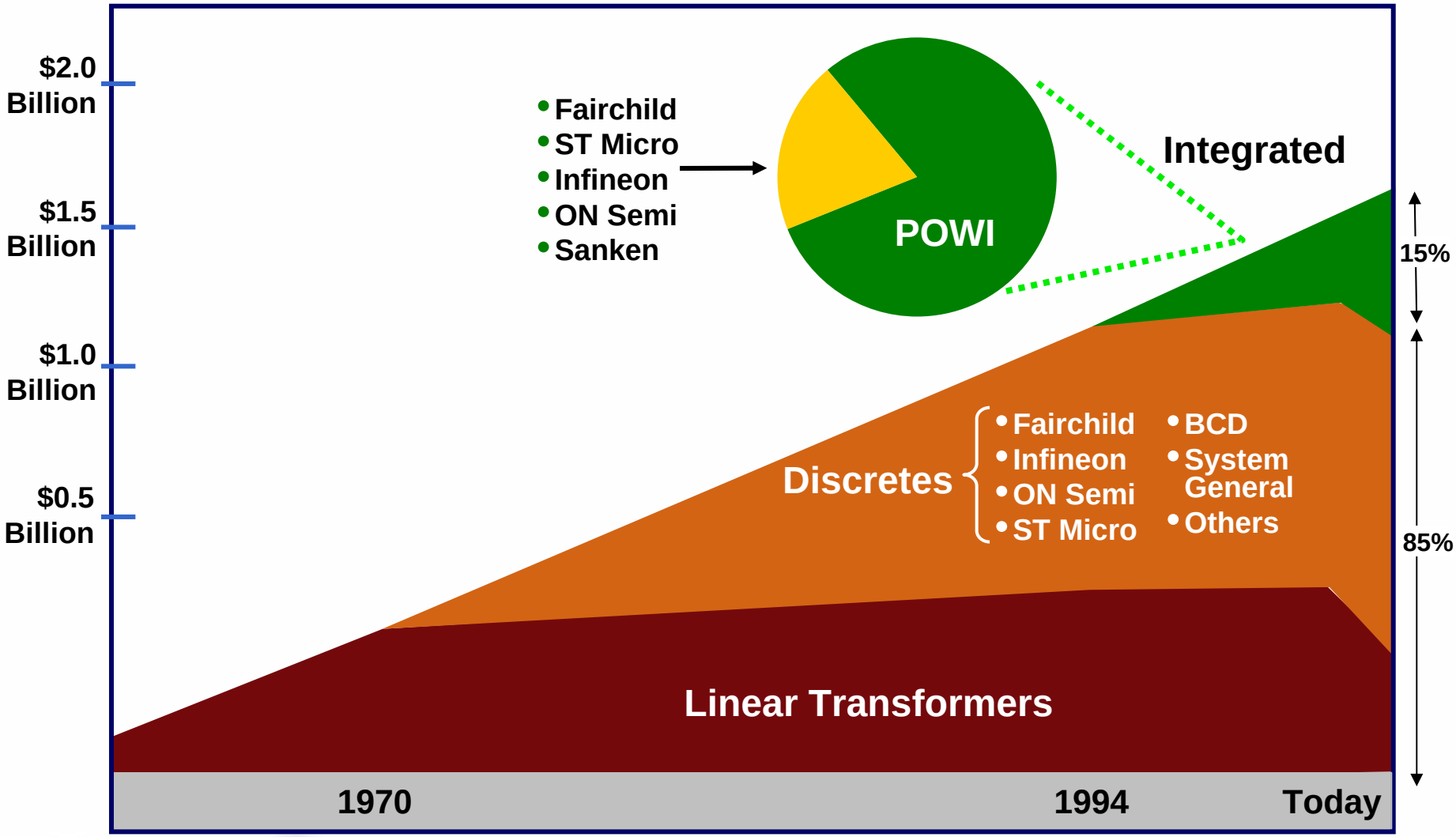

Key Benefits of POWI Technology

- Fewer components
- Reduced size, lighter weight
- Worldwide operability
- Highly manufacturable
- Simpler designs / shorter design cycles
- Extremely energy-efficient



Sustainable Market Leadership

Defensible intellectual property

191

U.S. Patents

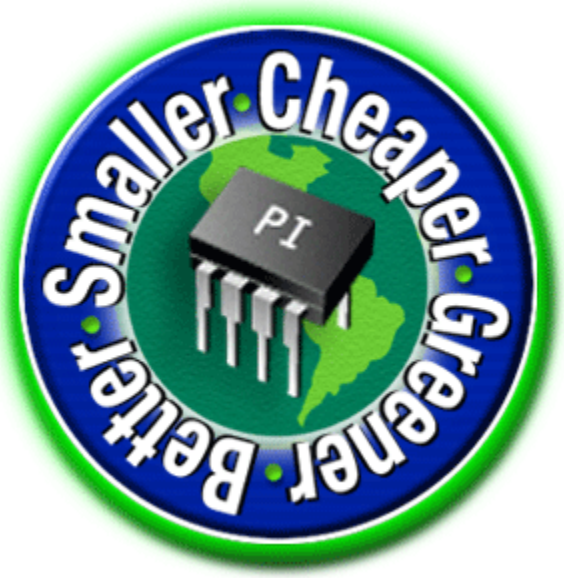

89

Foreign Patents



Patented Silicon Technology

Competitive silicon die-size advantage

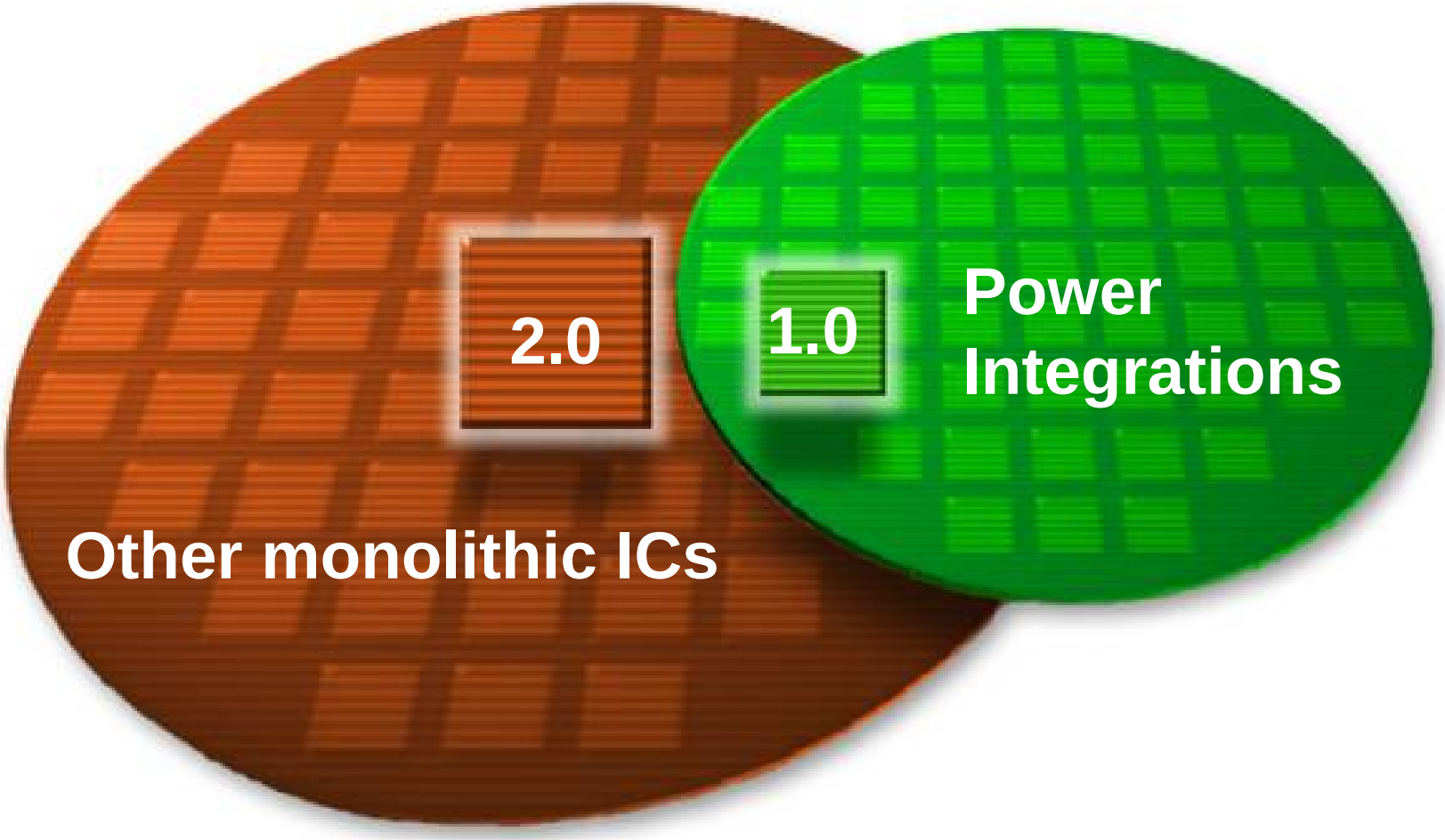

Patented Process Technology Enables Highly Cost-Effective Integration

Patented Circuit & System Innovations

Lower overall system cost

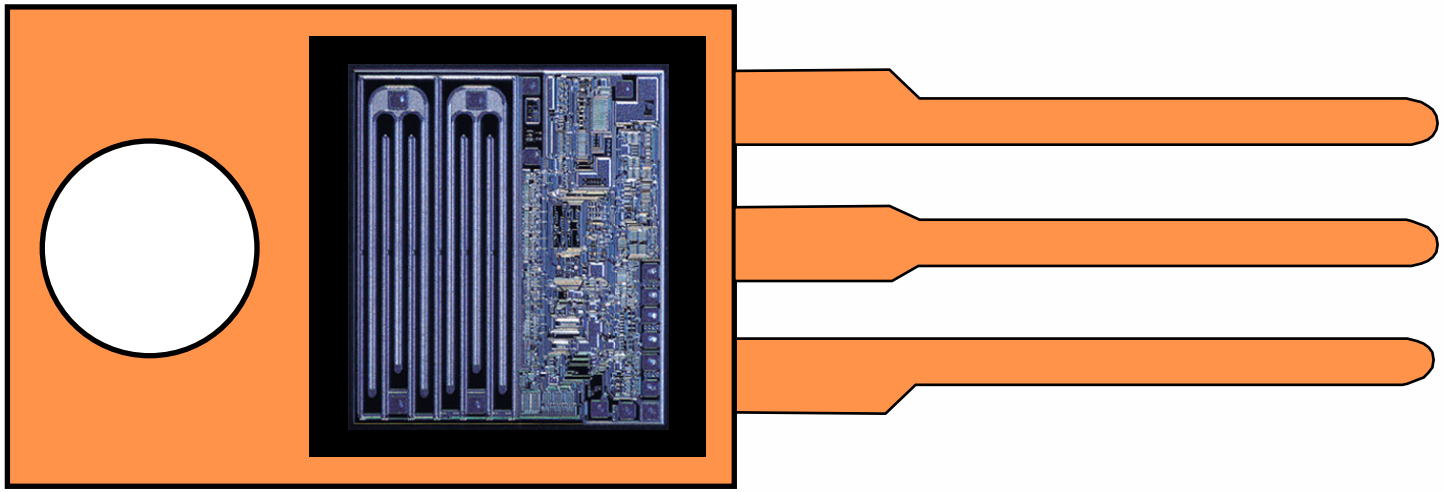

Patented IC Topologies and Power-Supply Circuit Designs



Addressable Markets

$1.6 Billion

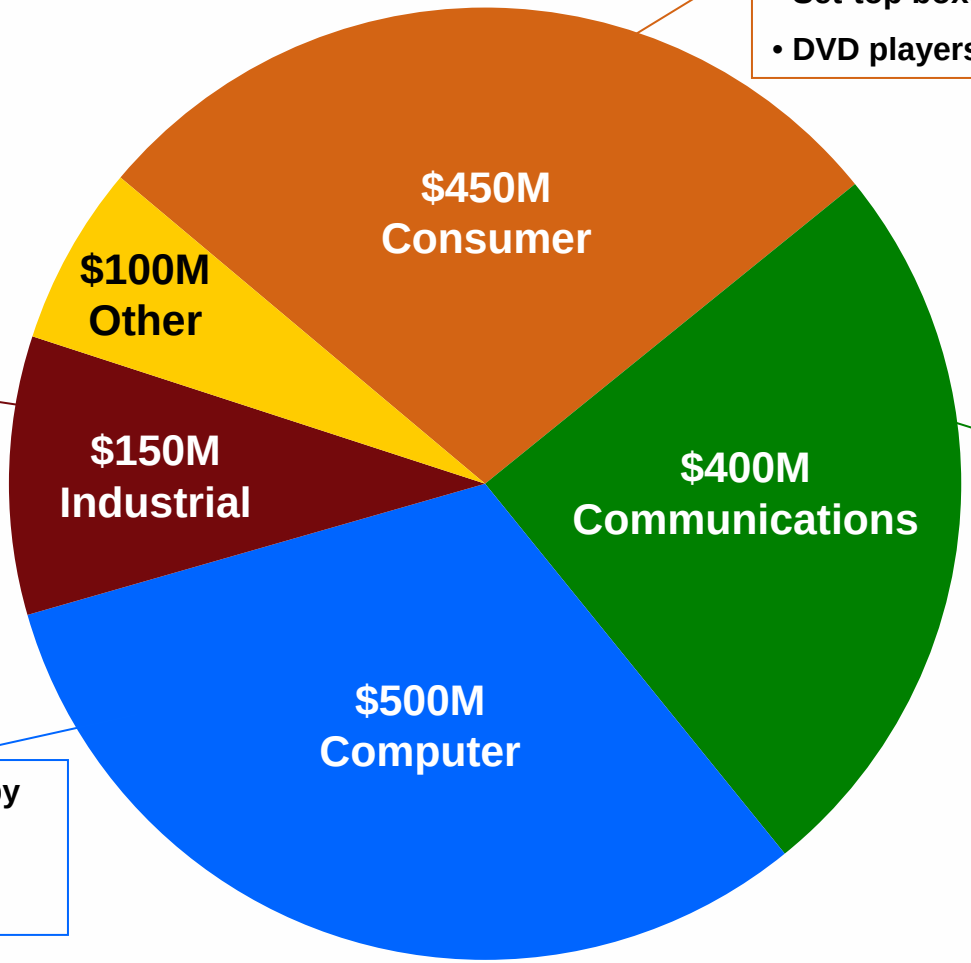

- White goods
- Small/personal appliances
- Set-top boxes
- DVD players, LCD TVs

- Industrial controls
- Motor controls
- UPS
- Utility meters
- LED lighting

- Cell phone chargers
- Cordless phones
- Broadband modems
- VoIP phones

- Desktop/server standby
- LCD monitors
- PDAs



Large, Diverse Markets: AC-to-DC

Every electronic device that plugs into the wall needs a power supply





Large, Diverse Markets: DC-to-DC

DPA-Switch for Distributed Power Architectures



Power over Ethernet devices (IP phone, WAP, security camera)

DC-DC converter modules

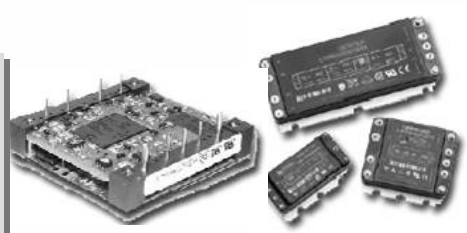



Industrial controls

Telecom & network infrastructure





Servers



Products Address Wide Power Range

~70% of AC-DC market plus high-voltage DC-DC applications

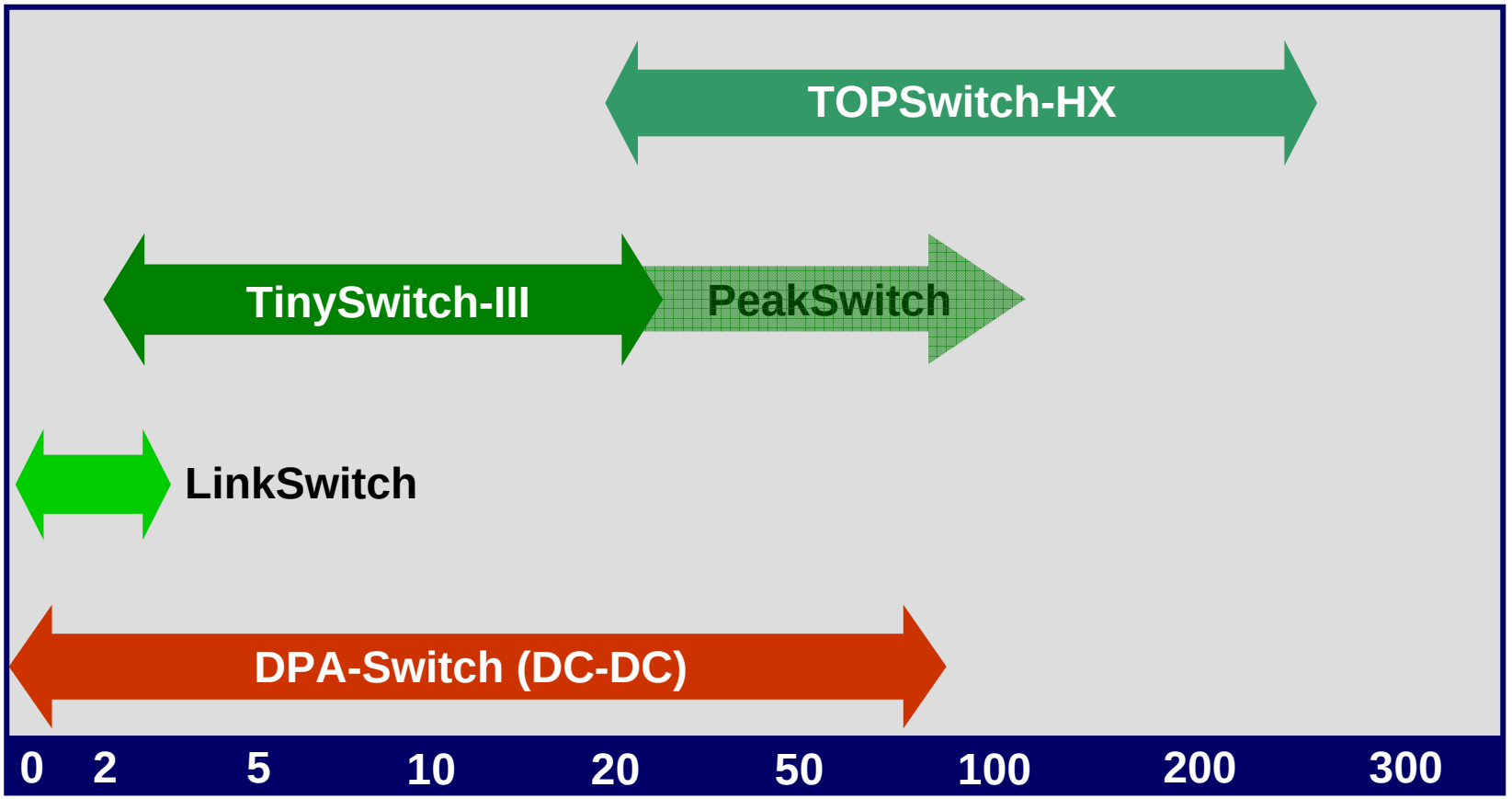



Revenue Mix By Product Family

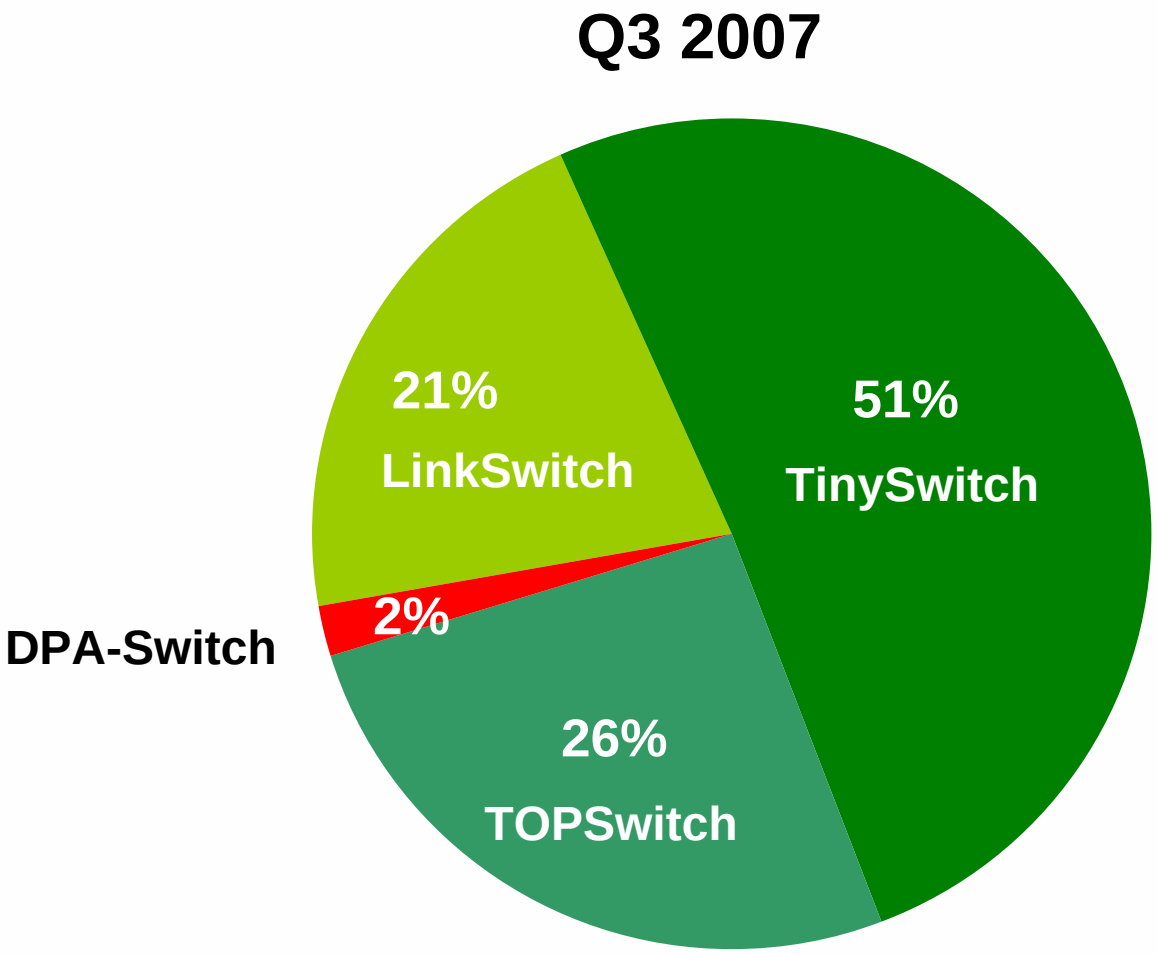

Introducing *TinySwitch®-III*

- **Successor to world's most widely used high-voltage power conversion IC**
- **Even more cost-effective**
- **Selectable current limits increase design flexibility**
- **Improved energy-efficiency**

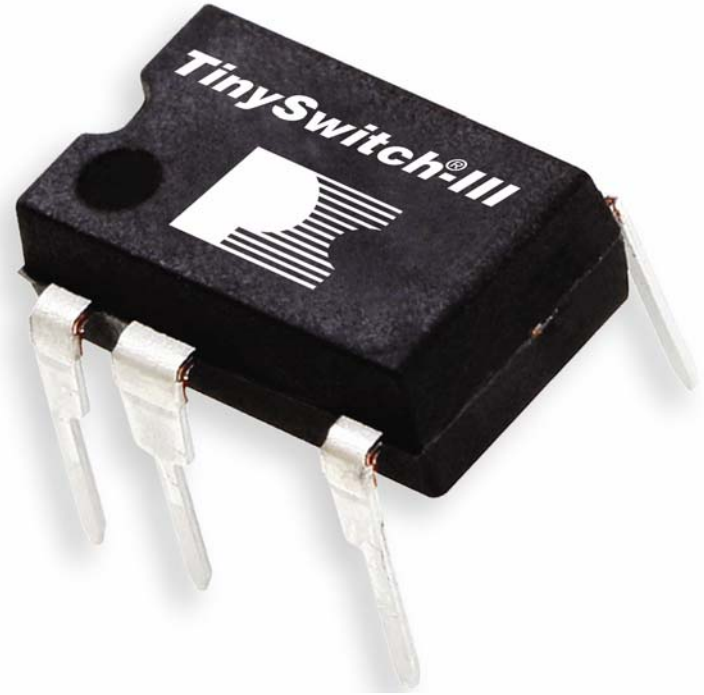



Introducing *PeakSwitch*™

- **Handles momentary peaks in power by increasing switching frequency**
- **Power supply can be designed for average power load – saves cost**
- **Targeted at printers, amplifiers, broadband modems, PVRs**





Typical switching frequency at distinct load points

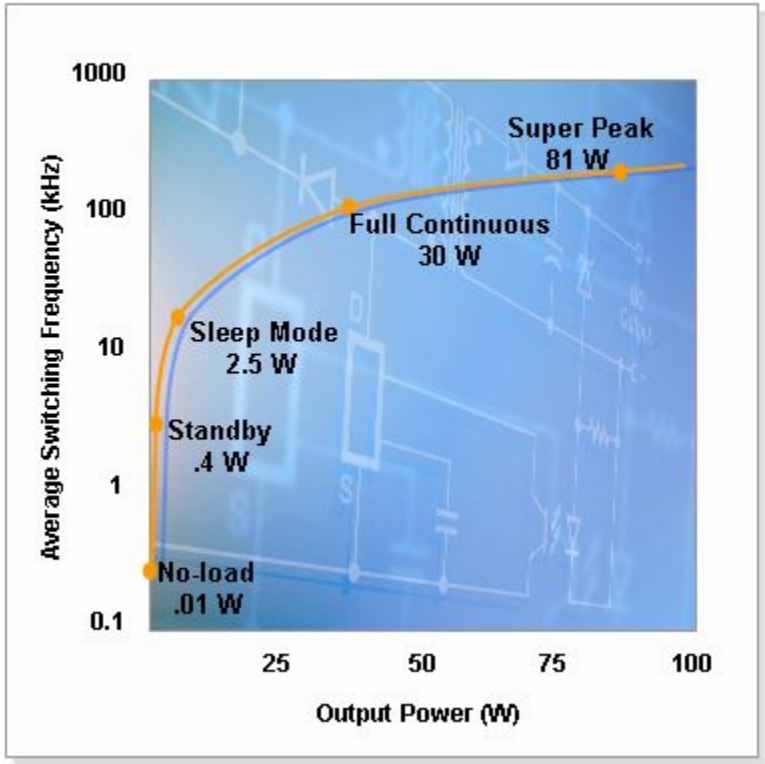



Introducing *TOPSwitch®-HX*

- **Delivers industry's highest output power for 1 W input**
- **Eliminates costly separate standby power supply in audio/video products and appliances**
- **Best-in-class efficiency across entire load range**
- **Delivers up to 48 W without the need for heatsinking**
  - **Up to 150 W with heat sink**

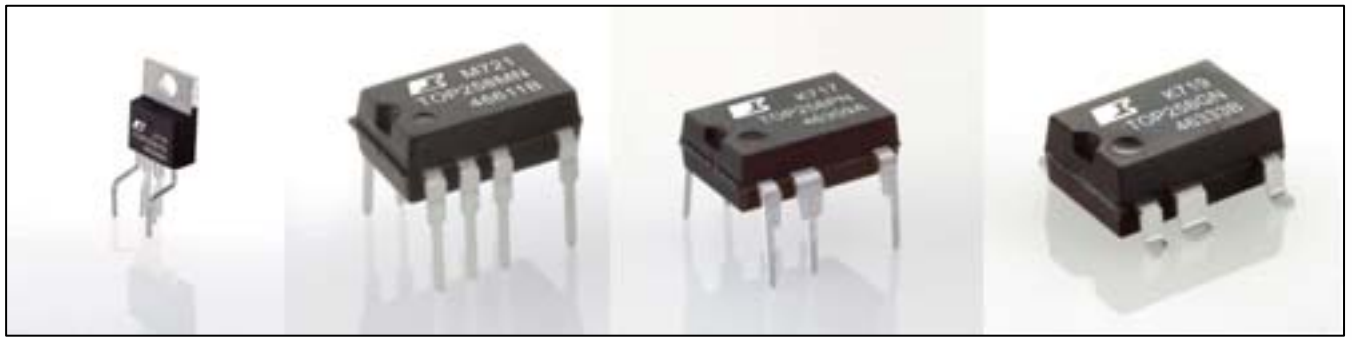

Supply Chain for Power Supplies

Power Supply Manufacturers
including

OEMs
including

Distribution (~65%)

Direct (~35%)

Phihong	HiPro
Delta	AcBel
Liteon	TenPao
RF Tech	Friwo
Dream Tech	Jabil
Salom	Flextronics
Unitron	Leader

Samsung, Motorola, LG

Dell, HP, Apple, Lenovo

Sony, Toshiba, Panasonic

Mitsubishi, Electrolux















Fabless Manufacturing Model



Wafers (1.5 – 3.0µ)
Matsushita – Japan
OKI – Japan
Epson – Japan
Z Foundry – Germany

Assembly
Malaysia
Philippines
China
Thailand

Final Test
San Jose, CA
Malaysia
China



Energy Efficiency: The Key Opportunity in Power Conversion

Electronic products are a major source of waste

- Inefficient power supplies (“energy vampires”) waste energy during normal operation and “standby” mode
- Standby power is consumed when a product is not in use
  - e.g., a computer or printer in sleep mode, a TV or DVD player turned off by remote control, an appliance with electronic controls and LED displays, a cellphone charger left plugged into an outlet
- According to Berkeley National Laboratory, up to 10% of residential electricity is consumed by products in standby








Standby Power Comes At a Price

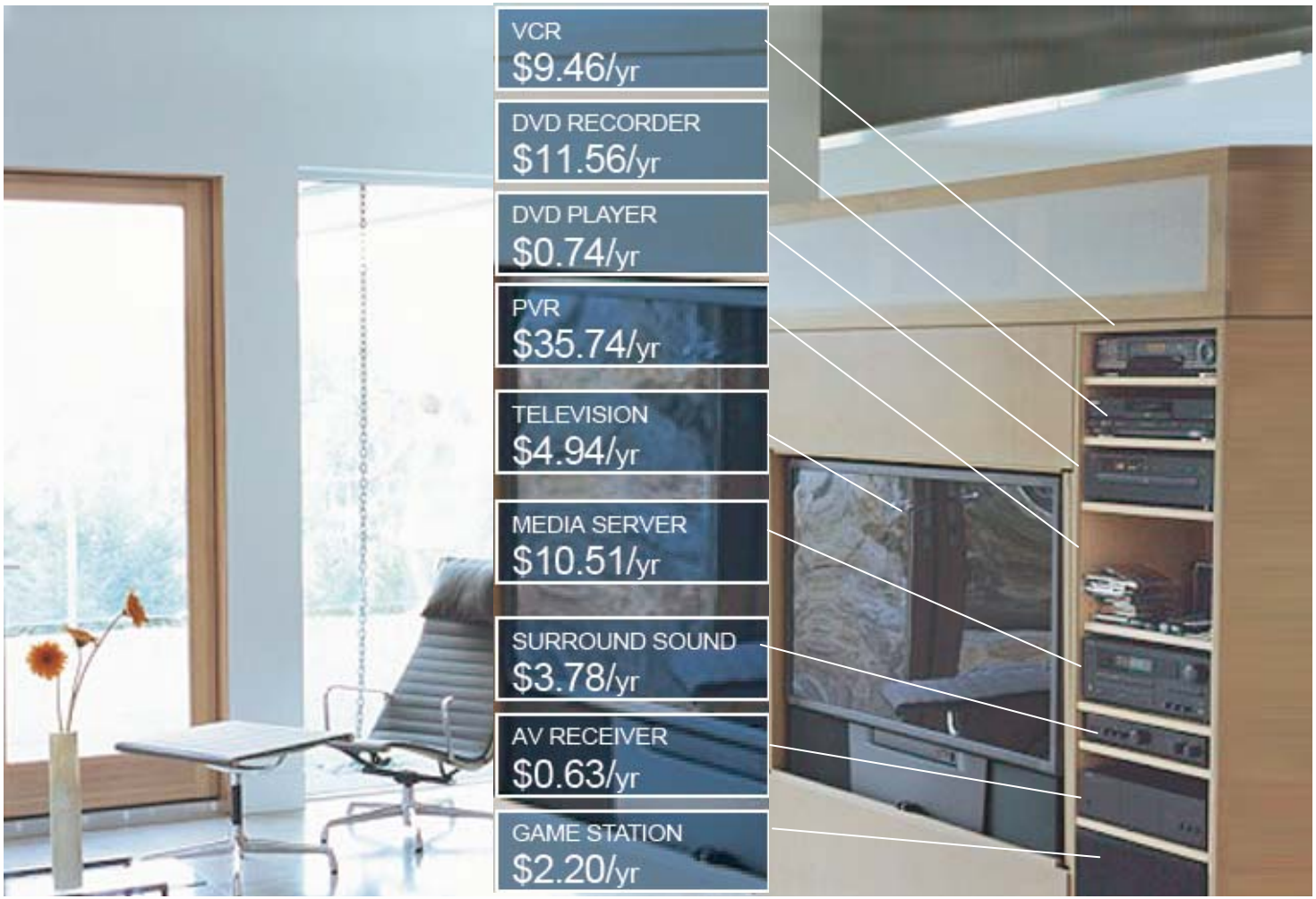



Legacy Power-Supply Technologies Are Inherently Inefficient

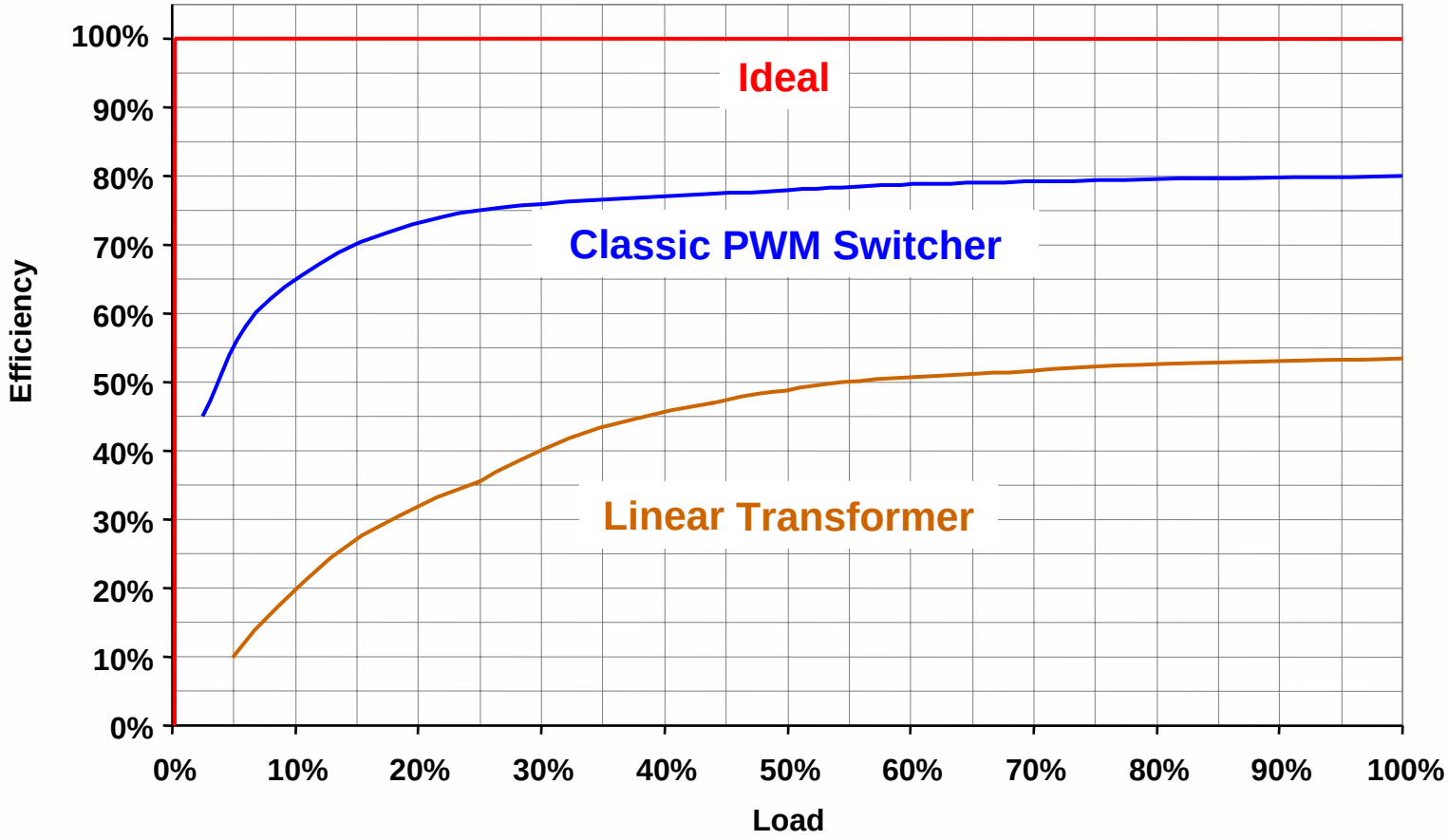

Efficiency Drops Off Dramatically at Light Loads (i.e., Standby)

A Solution: *EcoSmart* Technology

ON/OFF control for constant efficiency

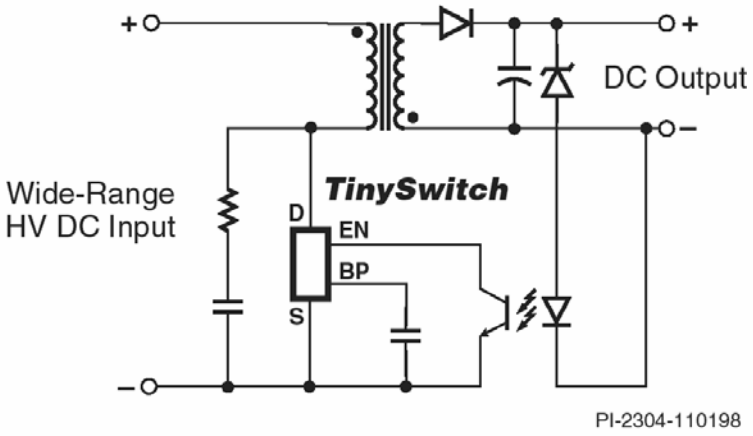

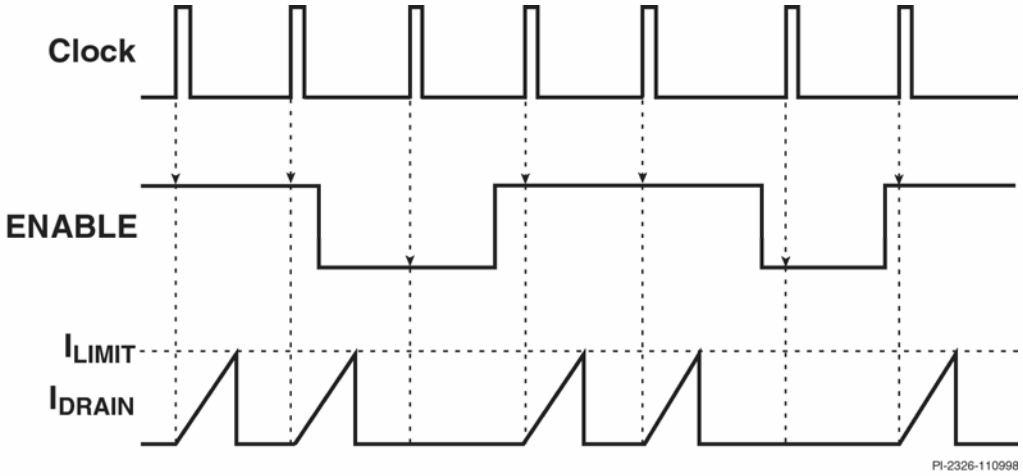

- **Each cycle delivers full power**
- **Cycles skipped when less power needed (i.e. in standby mode)**
- **Provides constant efficiency independent of load**



EcoSmart: High Efficiency at Any Load Level

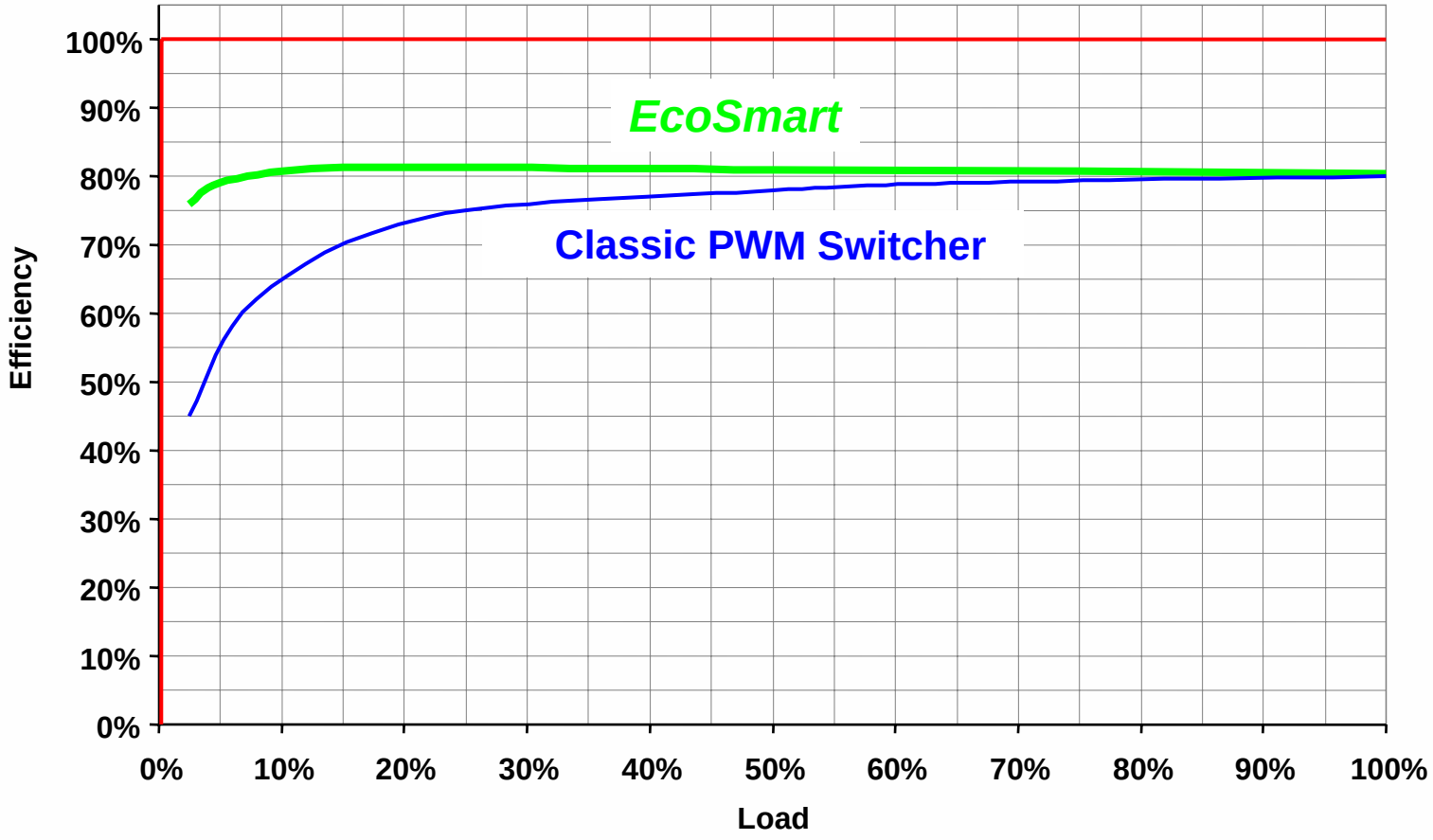

Importance of Power Supply Standby Efficiency

Power supply standby efficiency	Total input power	Loss in Power supply	Power used by the product
33%	2.0 W	1.5 W	0.5W
67%	0.75 W	0.25 W	0.5W



Doubling standby efficiency saves 1.25 W



Making a Difference to the Environment

Sales of *EcoSmart* Chips
(Cumulative units, in millions)

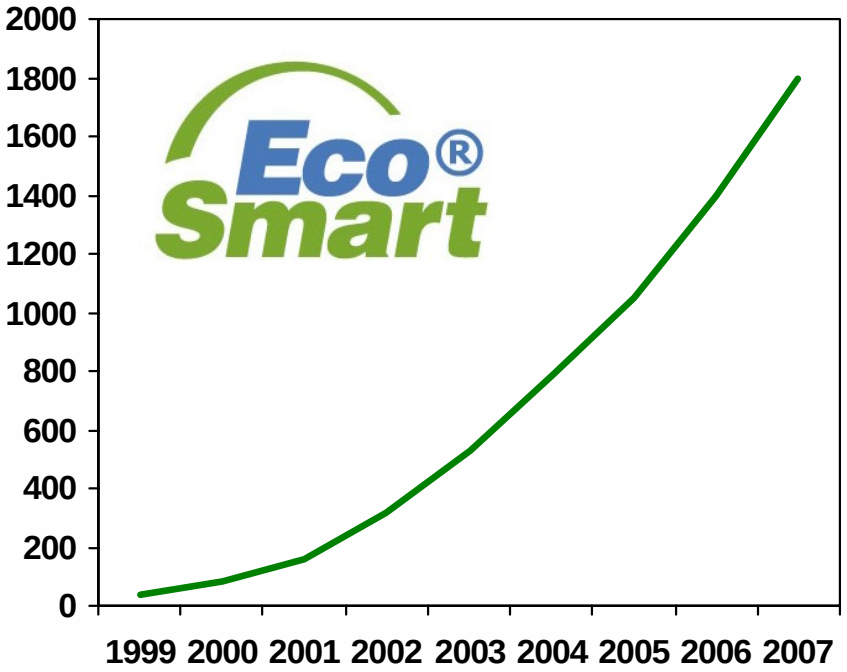

- **Over $2.5B of estimated energy savings since 1998**
  - **Equates to about 16M tons of CO_2 emissions averted**
  - **Like taking about 2.5M automobiles off the road for a year**



Tighter Standards: An Irreversible Trend

A sampling of initiatives intended to reduce energy waste

Energy Star	**Voluntary standards on consumer electronics, appliances, external power supplies**
EU Code of Conduct	**Voluntary standards for external power supplies, set-top boxes, TVs**
US Presidential Executive Order	**Mandatory 1W max. standby consumption on U.S. government purchases**
Japan "Top Runner" Program	**Lowest standby consumption becomes the standard**
Germany Blue Angel	**Products must meet standby power mode requirements**
Finland Nordic Swan	**1 W standby for television sets**
China CECP	**Voluntary standards similar to Energy Star**



New Global Standard for External Adapters



Linear Transformers Are Headed for Extinction



Active-Mode Efficiency Standard

For external power supplies

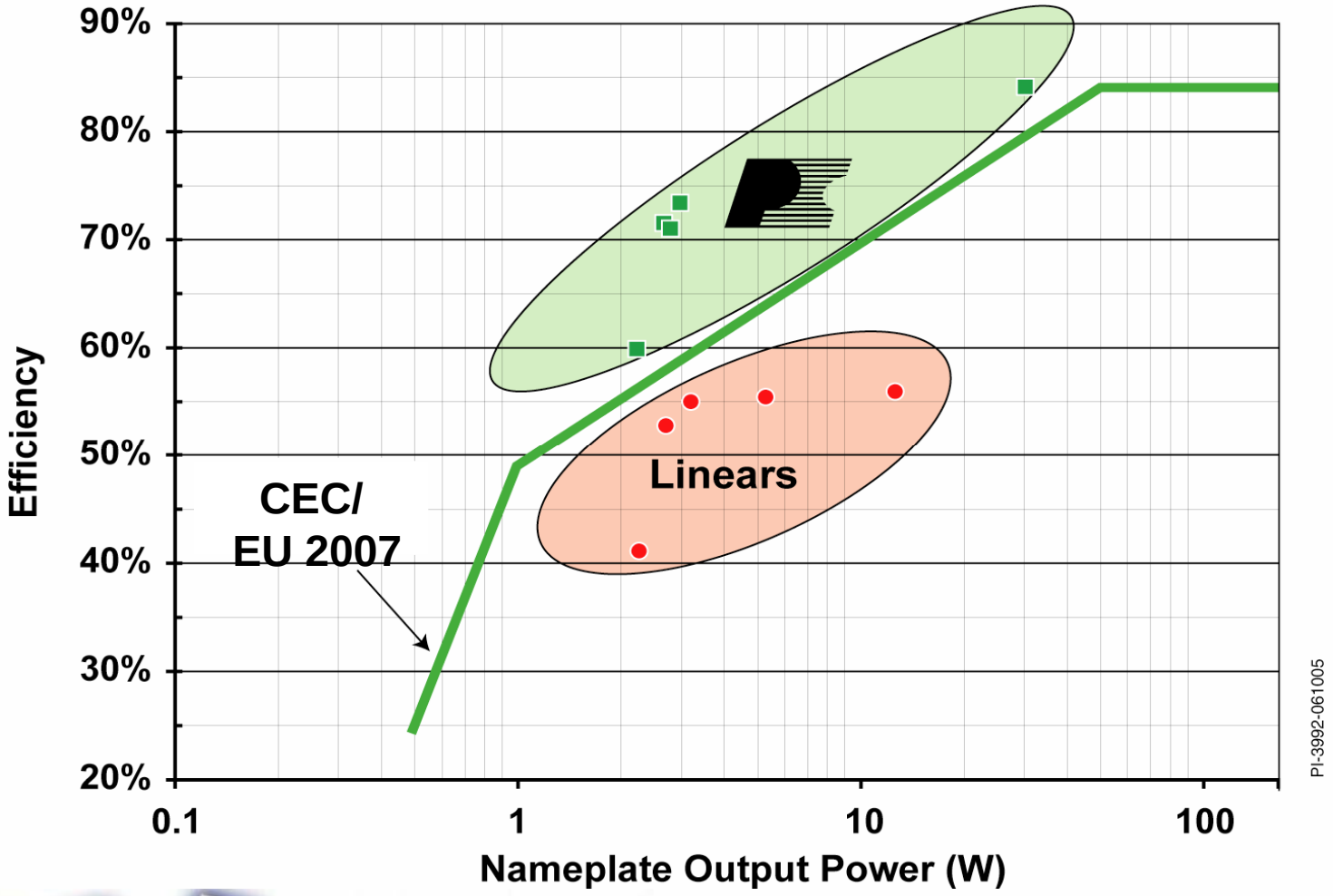

No-Load Consumption Standard

For external power supplies

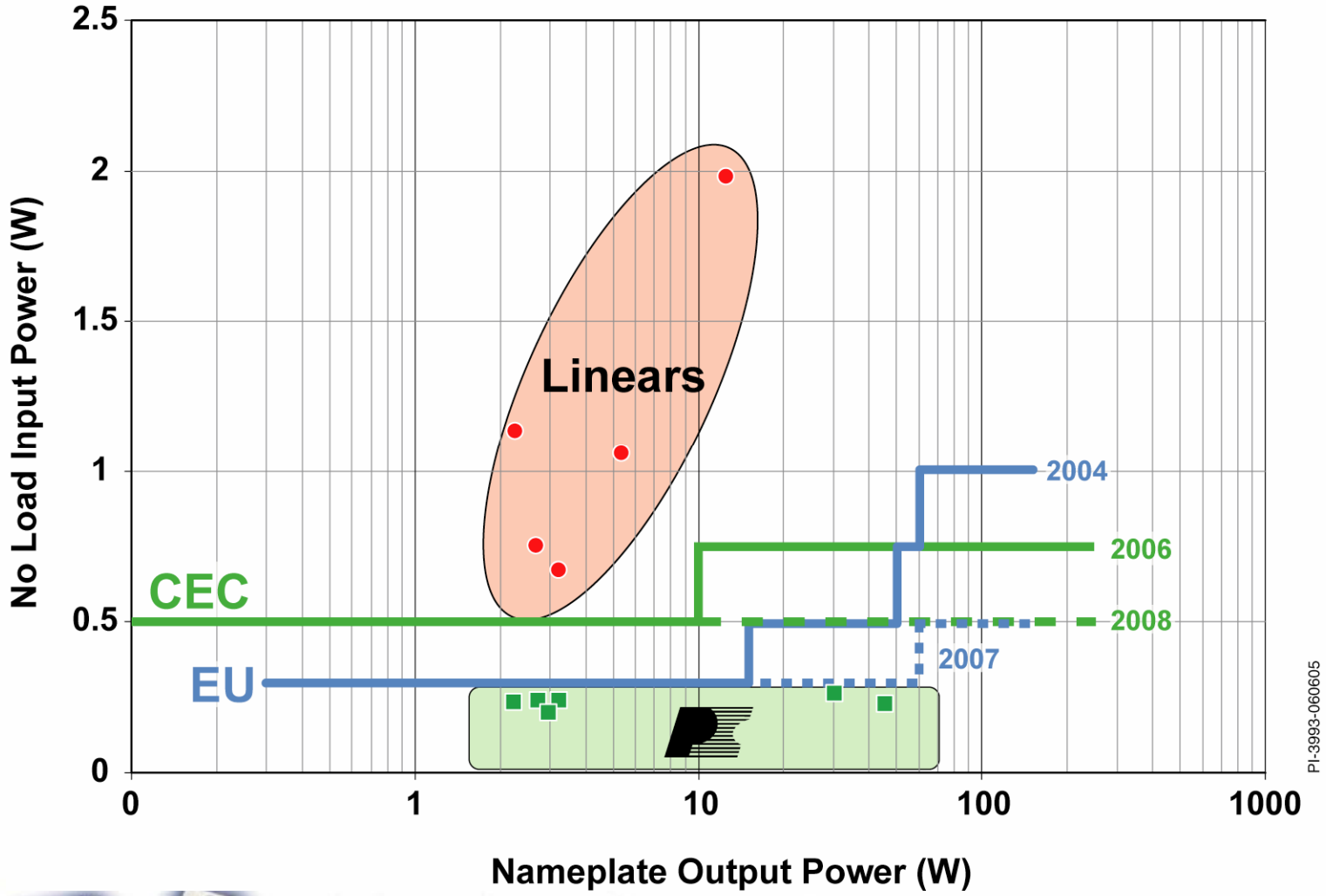

ENERGY STAR® and CEC Are Tightening Up

- **ENERGY STAR 2.0 specs for external power supplies**
  - No-load power limit reduced
  - Higher active-mode efficiency
- **CEC no-load limit drops to 0.5 W for high-power EPS July 2008**

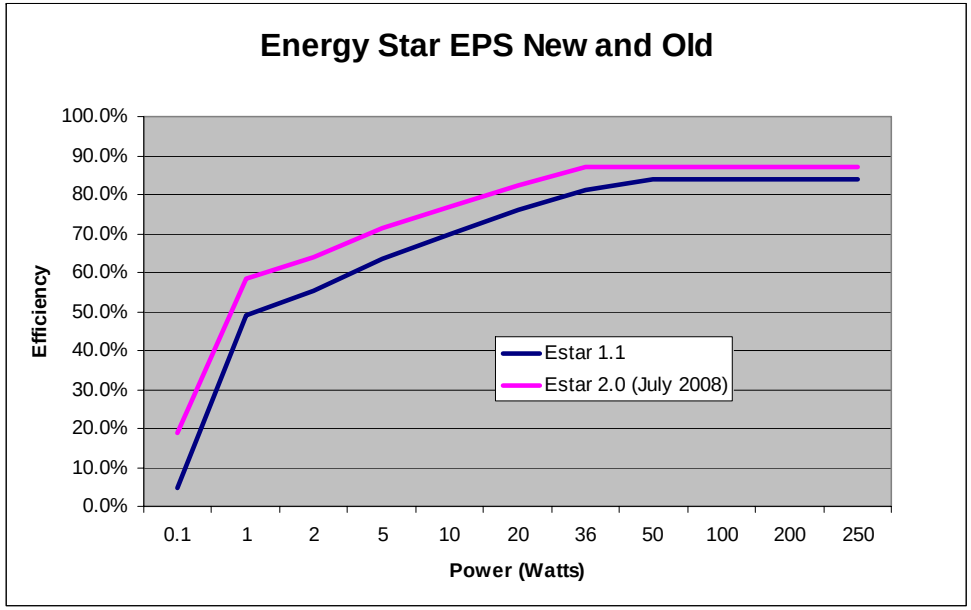

ENERGY STAR 2.0 Draft Standard		
Nameplate Output Power (Pno)	Maximum Power in No-Load	
	Ac-Ac EPS	Ac-Dc EPS
0 to < 50 watts	0.5 watts	0.3 watts
50 to < 250 watts	0.5 watts	0.5 watts

ENERGY STAR 1.1 Existing Standard	
Nameplate Output Power (Pno)	Maximum Power in No-Load
	Ac-Ac and Ac-Dc EPS
0 to < 10 watts	0.5 watts
10 to < 250 watts	0.75 watts



Energy Vampire vs. *EcoSmart*



Power supply with *EcoSmart* technology uses very little no-load power

Options for Replacing Linear Power Supplies: POWI vs. Discretes

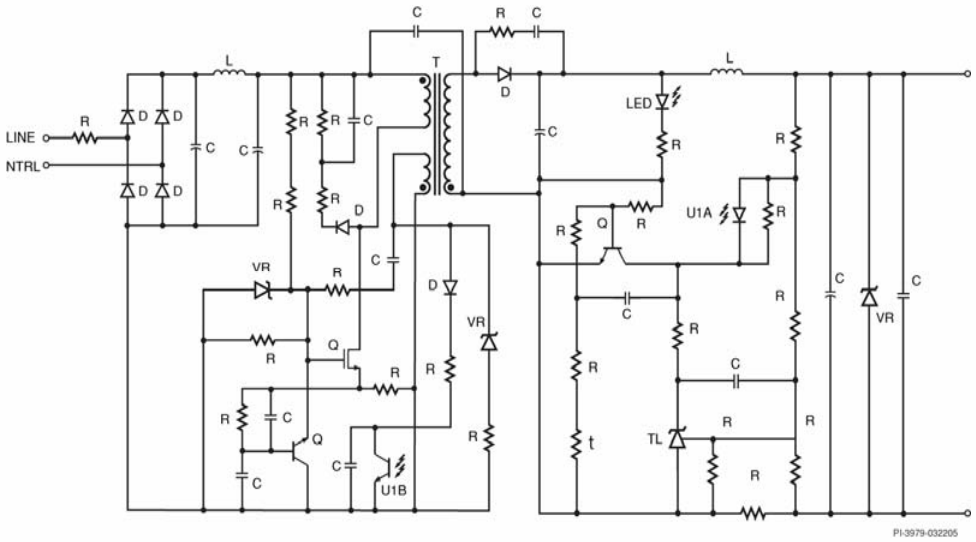

Charger With Discretes

- More than 50 components
- Protection features require external components

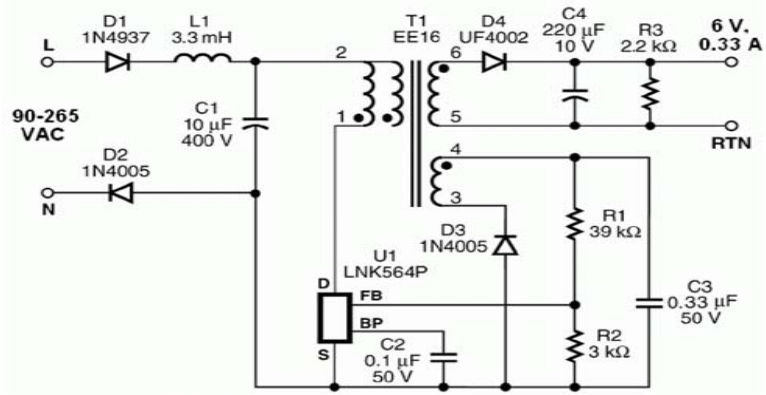

Charger With *LinkSwitch-LP*

- Only 14 components
- Integrated protection features



Portfolio of Linear Replacement Products

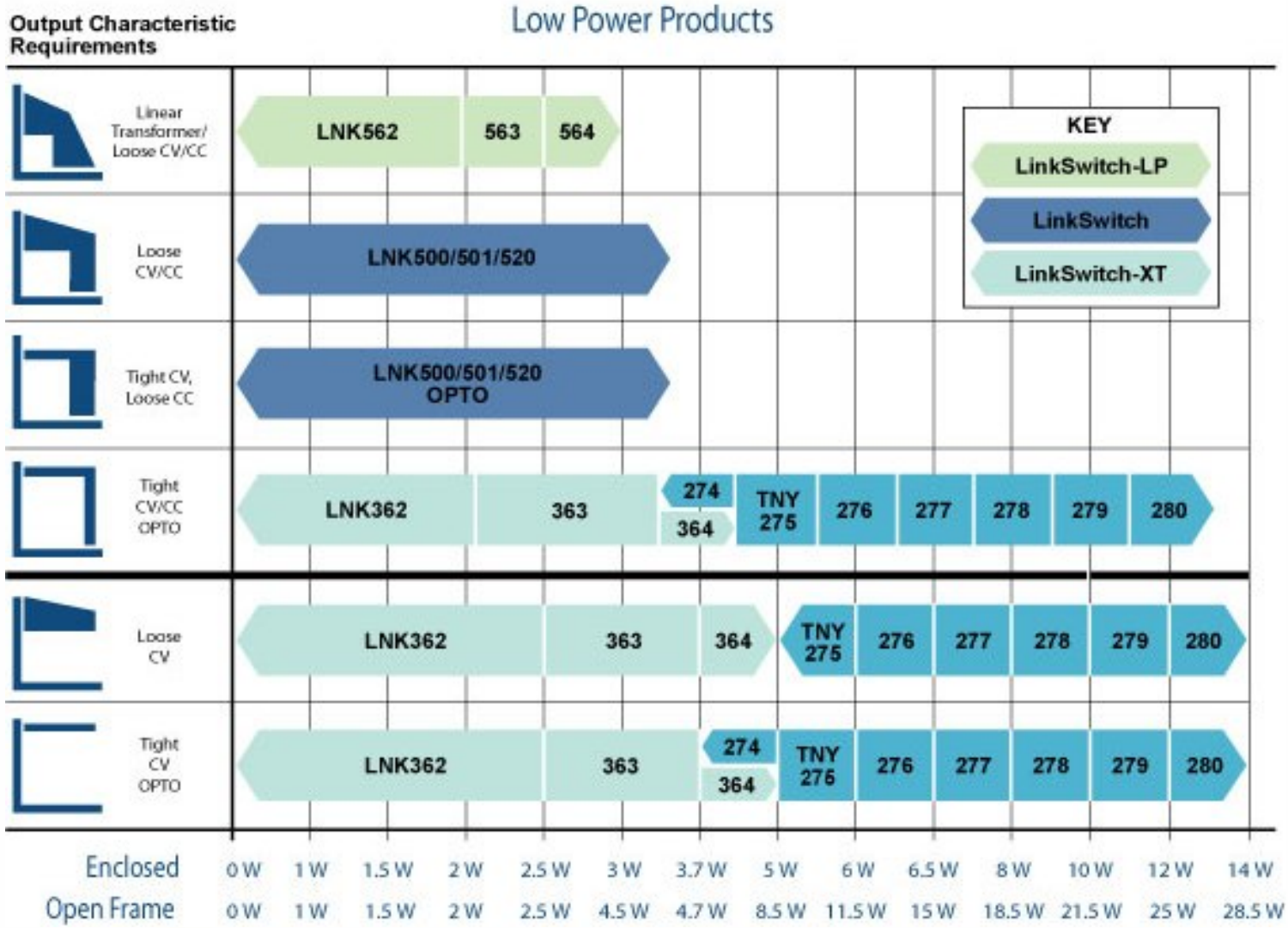



A solution for any type of linear replacement design

Accelerating Linear Replacement

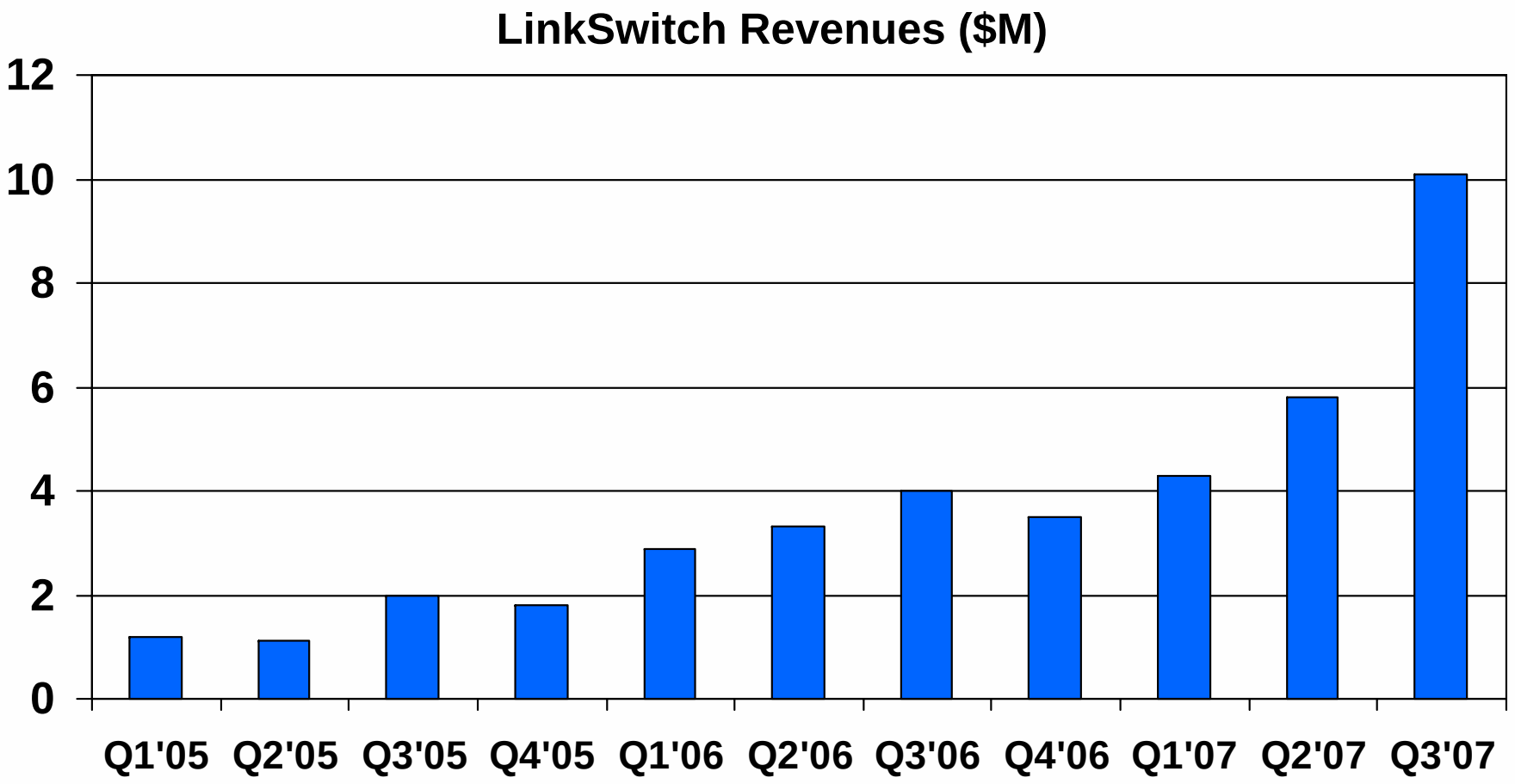



Efficiency Coming to Lighting Market

- **Calif. Title 24 Requires Efficient Lighting in Residential Construction**
- **Australia, Canada phasing out incandescent bulbs**



Ultra-compact LED driver with LinkSwitch - fits in standard light fixture

Q3 Results Recap

- **Revenues up 15% sequentially to $49.8M**
  - **Product revenues up 17% year-to-date**
- **53.7% non-GAAP gross margin**
- **Non-GAAP op. margin >20.5% (including 3.5-point impact from restatement-related expenses)**
- **Non-GAAP EPS $0.32 (incl. 4-cent impact of restatement expenses)**
- **Cash up $28M to $178M (~$6 per share, no debt)**



Revenue Growth

$ Millions

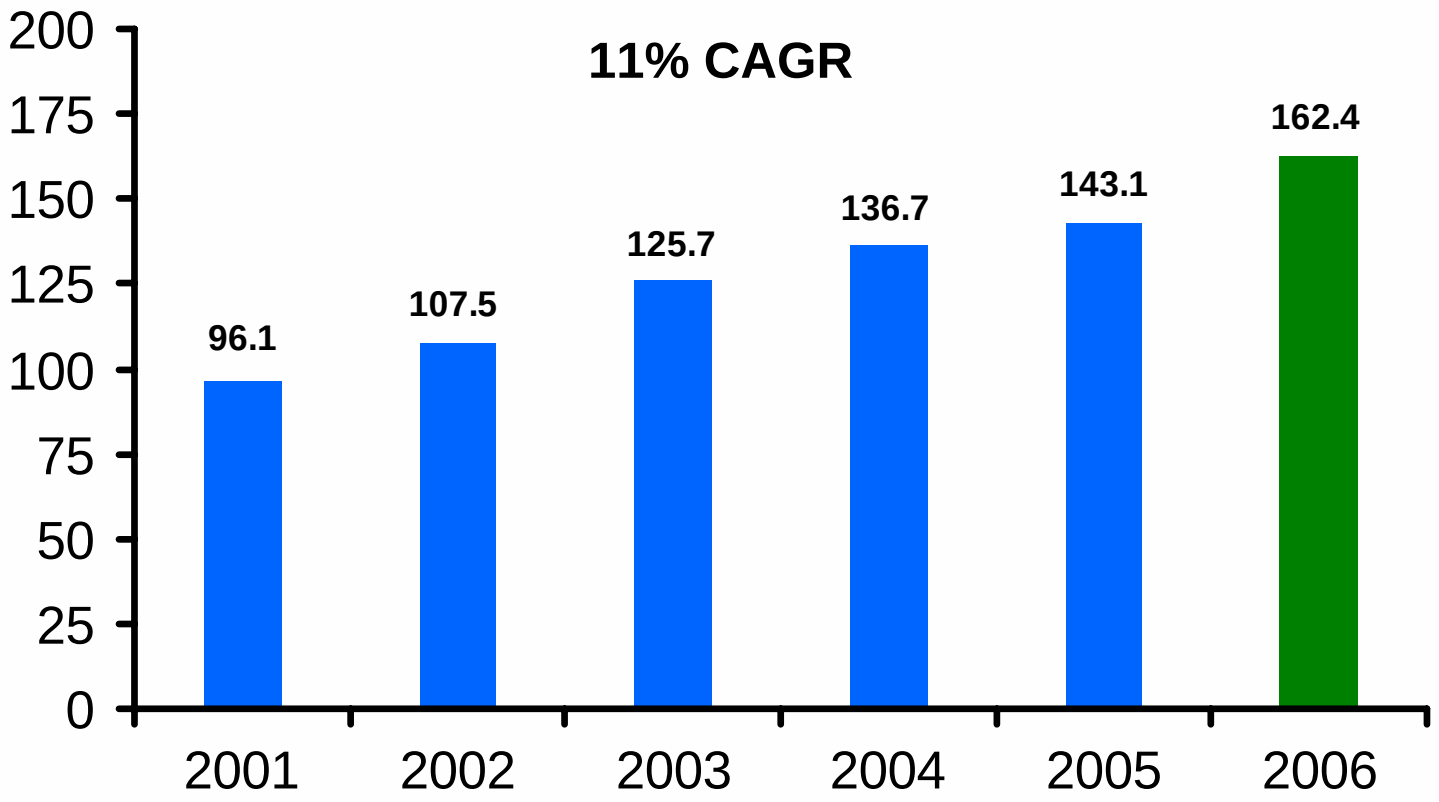

Quarterly Revenues

$ Millions

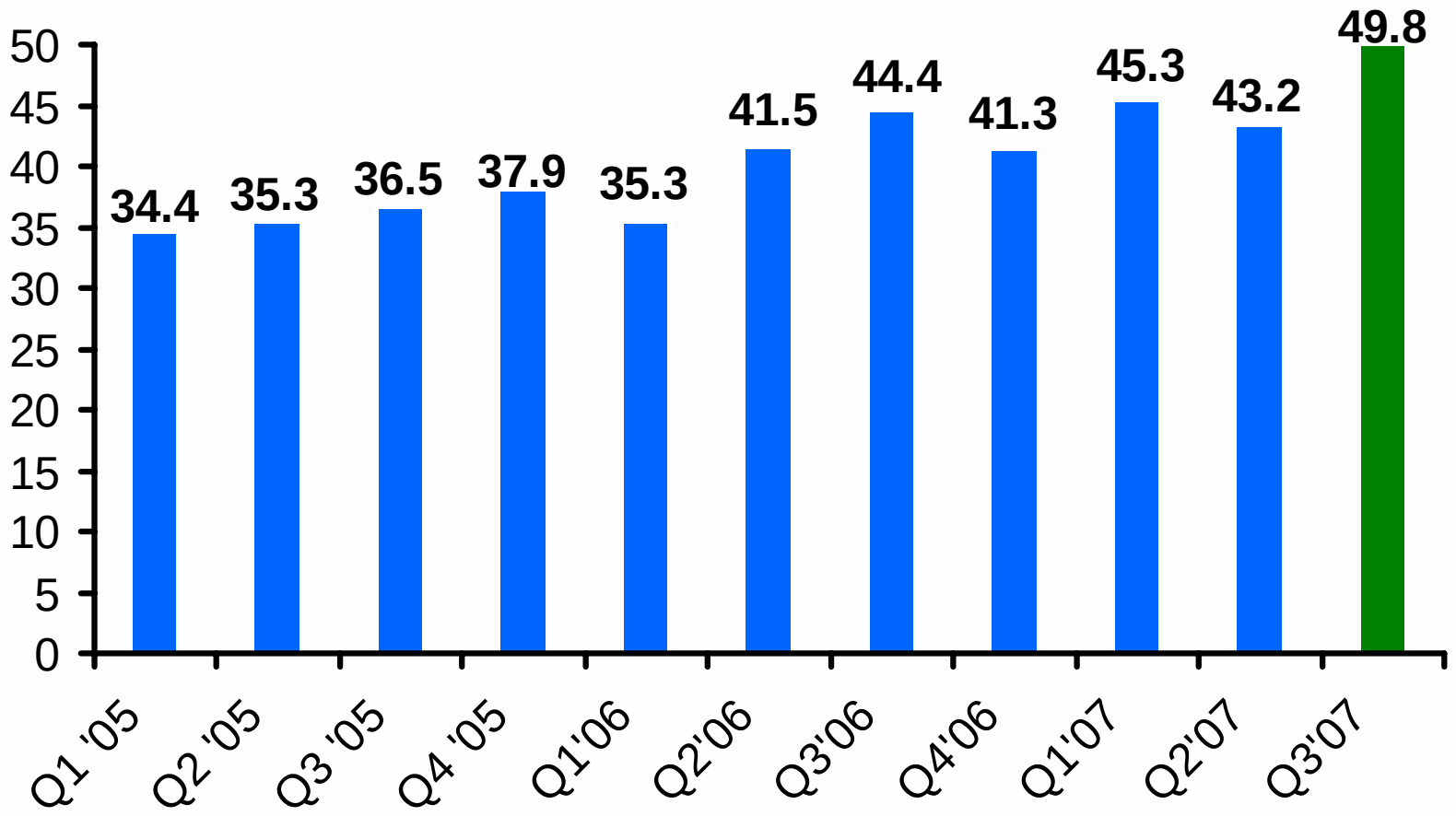

Peer Comparison – Revenue Growth

Five-Year Revenue CAGR (2001-2006)

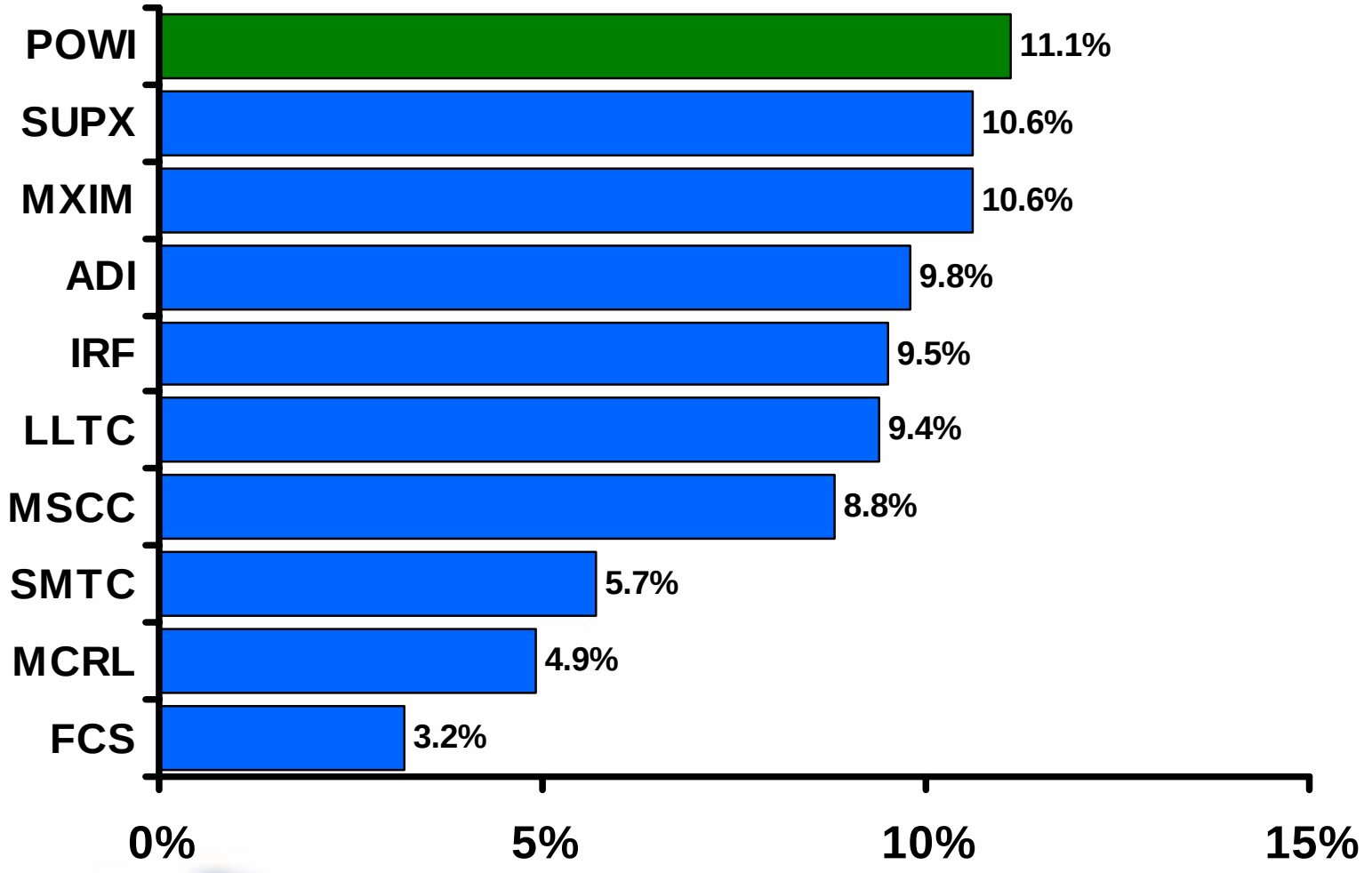

Note: SMTC based on year ended Jan 2007; MSCC on year ended Sept. 2006; ADI on year ended Oct. 2006

Highly Diversified Revenue Mix

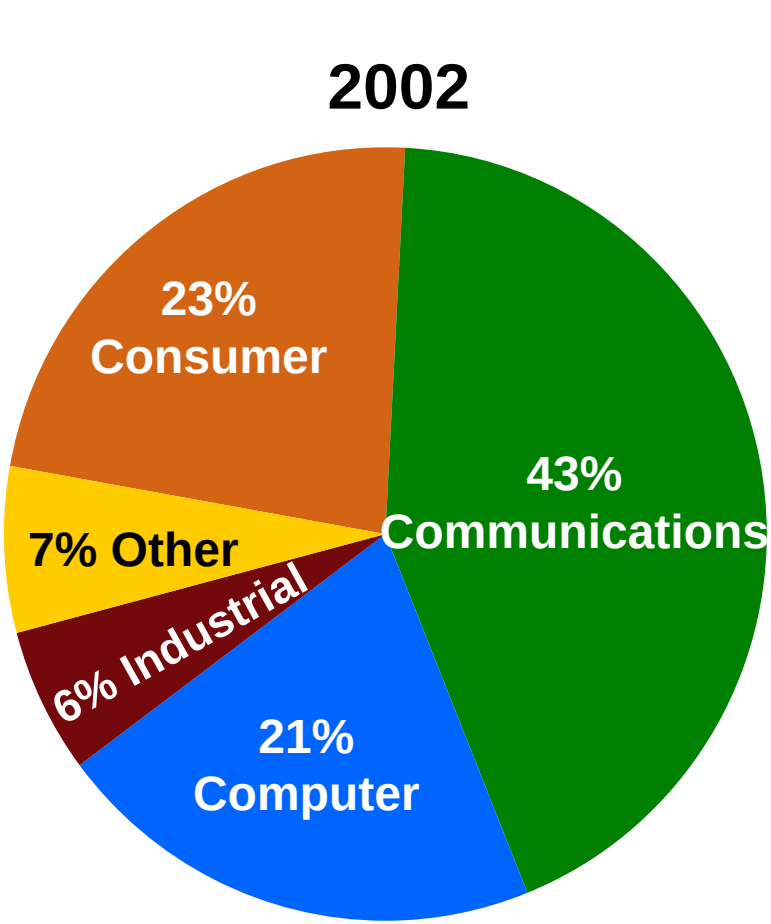

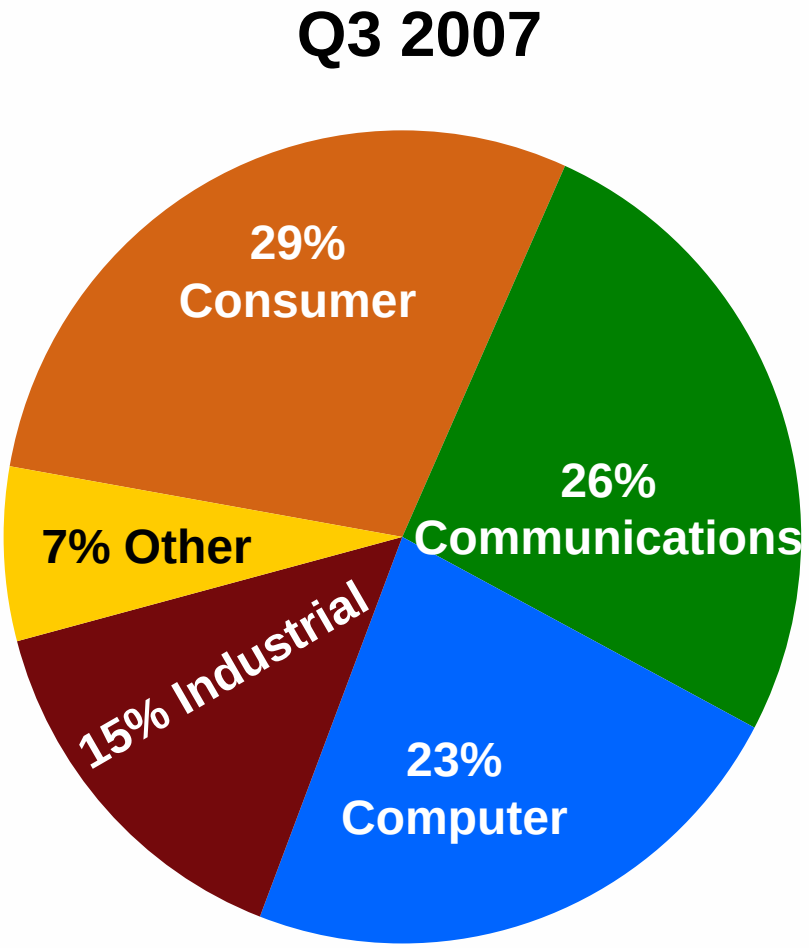



Gross Margin Expansion

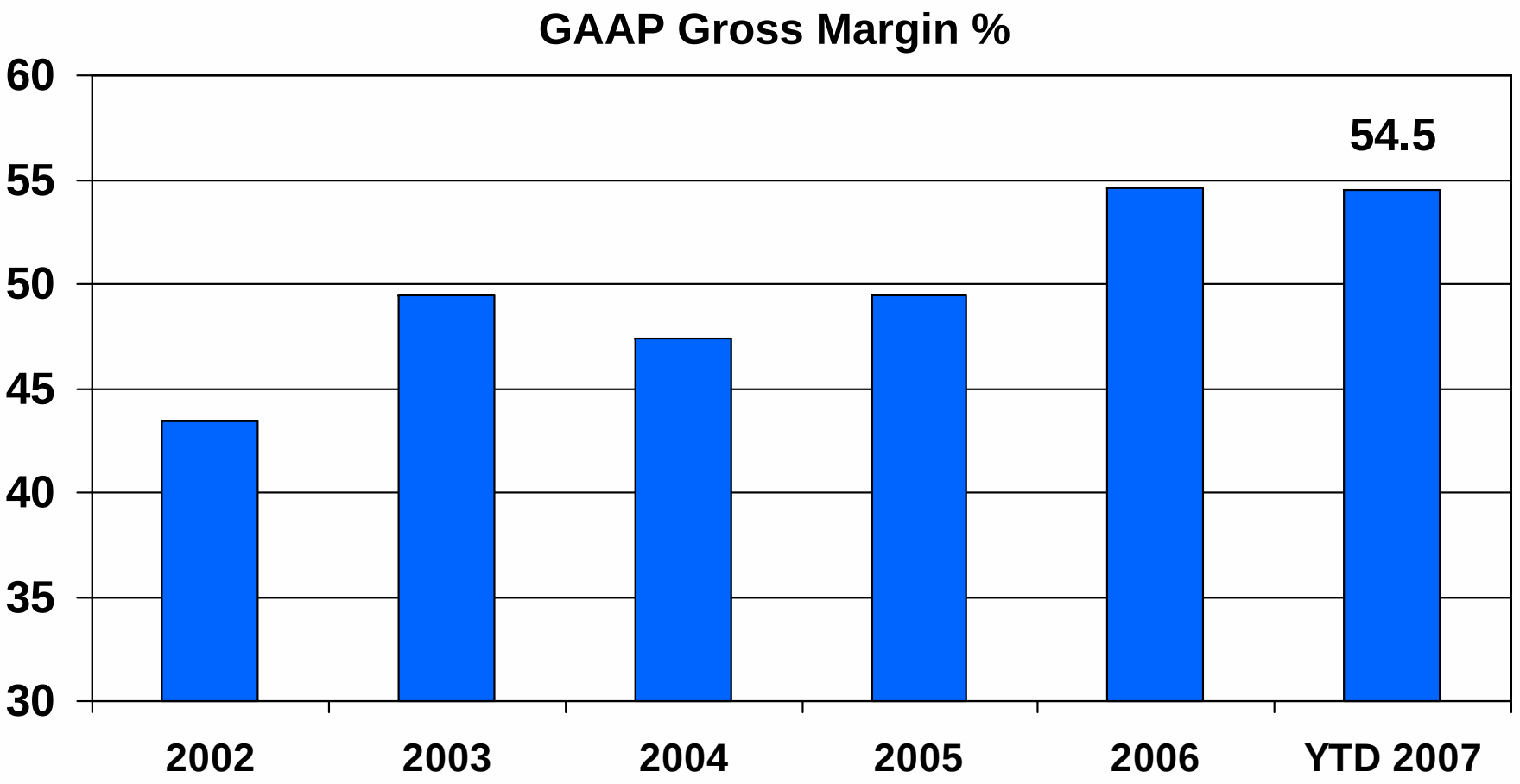

Strong Leverage

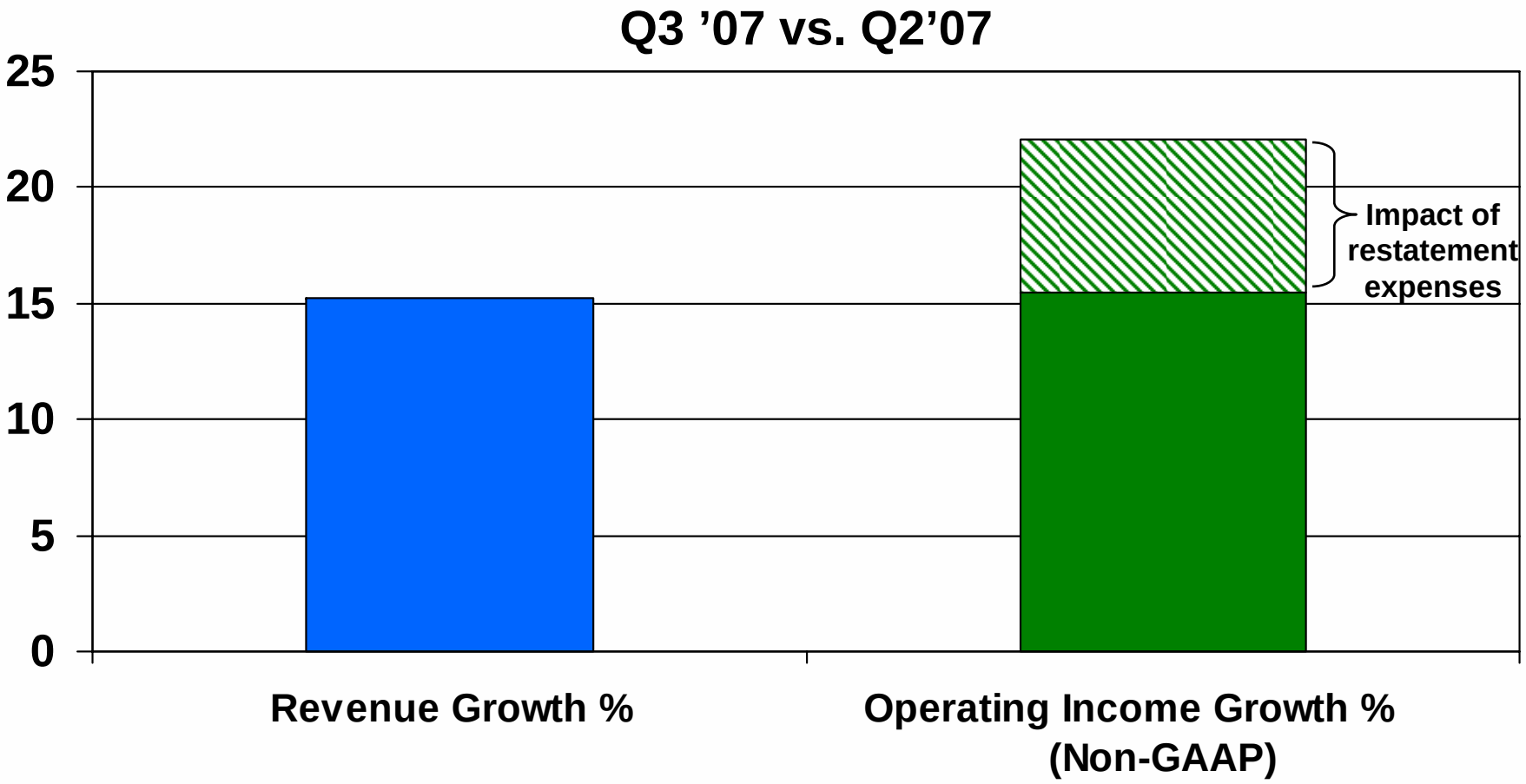

Key Growth Drivers

- **Growing focus on energy-efficiency**
- **Replacement of linear power supplies**
  - Driven by energy standards and cost
- **Expanded sales force**
- **Emerging applications**
  - Lighting
  - Power over Ethernet
- **Recent product intros**
  - TOPSwitch-HX
  - TinySwitch-III
  - LinkSwitch-XT/LP



POWER INTEGRATIONS®

INNOVATION IN POWER CONVERSION



EcoSmart®

EXHIBIT D
(Power Integration's Reponses and Objections to Defendants' First Set of Interrogatories (Nos. 1-14))
Highly Confidential

REDACTED

EXHIBIT E
(Press Release "Power Integrations Announces Fourth-Quarter and Fiscal 2007 Financial Results" dated February 6, 2006)



Power Integrations Announces Fourth-Quarter and Fiscal 2007 Financial Results

Feb 6, 2008 (PrimeNewswire via COMTEX News Network) --

Quarterly Net Revenues Increased 28 Percent Year-over-Year to a Record $52.7 Million

Company Announces $50 Million Share Repurchase Authorization

SAN JOSE, Calif., Feb. 6, 2008 (PRIME NEWSWIRE) -- Power Integrations (Nasdaq:POWI) today announced financial results for the quarter and fiscal year ended December 31, 2007. The company's net revenues for the fourth quarter were $52.7 million, up six percent compared to $49.8 million in the prior quarter, and a 28 percent increase compared to $41.3 million in the fourth quarter of 2006. For the full year, net revenues totaled $191.0 million, an increase of 18 percent compared to $162.4 million in 2006.

Fourth-quarter gross margin under generally accepted accounting principles (GAAP) was 53.2 percent. Net income was $6.6 million, or $0.20 per diluted share, compared to $6.8 million or $0.22 per diluted share in the prior quarter and $3.0 million or $0.10 per diluted share in the year-ago quarter.

Full-year gross margin on a GAAP basis was 54.2 percent. GAAP net income totaled $26.6 million, or $0.85 per diluted share, compared to $9.4 million or $0.31 per diluted share in the prior year. Fourth-quarter and full-year net income reflect the impact of a $1.4 million charge for in-process research and development associated with the company's acquisition of Potentia Semiconductor.

Non-GAAP Results

On a non-GAAP basis which excludes stock-based compensation expenses and acquisition-related charges, fourth-quarter gross margin was 53.8 percent. Fourth-quarter net income on a non-GAAP basis was $12.4 million, or $0.38 per diluted share. This compares to non-GAAP net income of $10.1 million or $0.32 per share in the prior quarter and $5.8 million or $0.19 per share in the fourth quarter of 2006.

Full-year non-GAAP gross margin for 2007 was 54.8 percent. Non-GAAP net income for 2007 was $40.8 million or $1.31 per diluted share, compared to $21.8 million or $0.71 per diluted share in the prior year.

The company ended the year with $205.5 million in cash and investments, an increase of $72.7 million compared to the end of 2006.

Revenue mix by end market for the fourth quarter was 31 percent consumer, 28 percent communications, 20 percent computer, 14 percent industrial and 7 percent other. By product family, revenue mix was 45 percent TinySwitch(r), 25 percent TOPSwitch(r), 28 percent LinkSwitch(r) and 2 percent DPA-Switch(r).

"2007 was an excellent year for Power Integrations, with 18 percent revenue growth, over half a billion units shipped, and more than $60 million in cash flow from operations," said Balu Balakrishnan, president and CEO of Power Integrations. "The year ended on an especially high note with 28 percent year-over-year revenue growth in the fourth quarter. This growth was broad-based, with revenues from each of our major end markets growing more than 20 percent.

"The adoption of our EcoSmart(r) ICs continues to accelerate, driven by energy-efficiency standards and elevated raw material costs," noted Balakrishnan. "In particular, copper-and-iron 'energy vampires' are heading toward extinction, and our LinkSwitch products are replacing them at a rapid rate. LinkSwitch revenues grew more than 150 percent in 2007 and accounted for 28 percent of total revenues in the fourth quarter.

"The importance of energy efficiency in power supplies continues to grow," added Balakrishnan. "The California standards on external power supplies are now set to take effect nationwide in July as a result of the new U.S. energy legislation. Tighter specifications from ENERGY STAR(r) and the European Union are also scheduled to take effect this year. Our EcoSmart

technology meets these and all other current and proposed standards worldwide in a highly cost-effective fashion."

Additional Highlights

* The board of directors of Power Integrations has authorized the use of up to $50 million for the repurchase of the company's shares. Repurchases will be executed according to certain pre-defined price/volume guidelines set by the board of directors.

* As announced today in a separate press release, Power Integrations has acquired Potentia Semiconductor, a developer of integrated controller chips for power conversion, for approximately $5.5 million in cash, including closing costs. Potentia's engineering team, based in Ottawa, Ontario, Canada, will form the core of a new analog design group for Power Integrations focused primarily on high-power applications.

* Power Integrations EcoSmart technology saved an estimated six billion kilowatt-hours of electricity during 2007 through the reduction of standby power consumption. As a result, an estimated total of four million tons of CO2 emissions were averted, an amount equal to the annual emissions of approximately 670,000 automobiles.

* In December, the judge overseeing patent-infringement litigation between Power Integrations (PI) and Fairchild Semiconductor dismissed Fairchild's suit against PI. Previously, in litigation brought against Fairchild by PI, Fairchild was found to willfully infringe four PI patents, resulting in a damage award of approximately $34 million. PI is now seeking an injunction against the infringing Fairchild products as well as an enhancement of the damage award based on the finding of willful infringement.

* In November, the U.S. Court of Appeals for the Federal Circuit affirmed the decision of the U.S. International Trade Commission (ITC) that certain controller chips produced by System General Corp., a subsidiary of Fairchild Semiconductor, infringe two Power Integrations patents. The infringing parts and certain downstream products containing them remain subject to an exclusion order prohibiting their importation into the U.S. The decision clears the way for Power Integrations to proceed with its patent-infringement lawsuit against System General in Federal District Court, which had been stayed pending the appeal of the ITC decision. Because the Court of Appeals has affirmed the ITC decision, the ITC's finding of infringement is binding on the district court.

* Power Integrations received five U.S. patents and one foreign patent in the fourth quarter. The company had a total of 197 U.S. patents and 90 foreign patents as of December 31, 2007. In 2007 Power Integrations received a total of 34 U.S. patents and 7 foreign patents.

First-Quarter Outlook

The company expects its revenues for the first quarter of 2008 to be in the range of $50 million to $54 million. Gross margins are expected to be similar to fourth-quarter levels. First-quarter operating expenses are expected to total between $20 million and $20.5 million, including approximately $3.5 million of stock-based compensation expenses and $1 million of expenses related to patent litigation.

Conference Call at 1:45 pm Pacific Time

Power Integrations management will hold a conference call for members of the investment community today at 1:45 pm Pacific time. Members of the investment community may access the call by dialing 888-806-6208 from within the United States, or 913-312-9315 from outside the U.S. A telephonic replay will be available for 48 hours following the conclusion of the call by dialing 888-203-1112 (U.S.) or 719-457-0820 (outside the U.S.) The replay access code is 1646294. The call will also be available via a live and archived webcast on the "investor info" section of the company's website, http://investors.powerint.com.

About Power Integrations

Power Integrations, Inc. is the leading supplier of high-voltage analog integrated circuits used in power conversion. The company's breakthrough integrated-circuit technology enables compact, energy-efficient power supplies in a wide range of electronic products, in both AC-DC and DC-DC applications. The company's EcoSmart energy-efficiency technology, which dramatically reduces energy waste, has saved consumers and businesses around the world more than an estimated $2.7 billion on their electricity bills since its introduction in 1998. For more information, visit the company's website at www.powerint.com.

Note Regarding Use of Non-GAAP Financial Measures

In addition to the company's consolidated financial statements, which are presented according to GAAP, the company provides certain non-GAAP financial information that excludes expenses (and the related tax effects thereof) recorded under Statement of Financial Accounting Standards No. 123R, "Share-based Payment," which requires the recognition of expenses relating to share-based payments such as stock options. Also excluded from non-GAAP financial results are certain acquisition-related expenses, such as charges reflecting the write-off of purchased in-process research and development. The company uses these non-GAAP measures in its own financial and operational decision-making processes and in setting performance targets for employee-compensation purposes. Further, the company believes that these non-GAAP measures offer an important analytical tool to help investors understand the company's core operating results and trends, and to facilitate comparability with the company's historical results and with the operating results of other companies that provide similar non-GAAP measures.

These non-GAAP measures have certain limitations as analytical tools and are not meant to be considered in isolation or as a substitute for GAAP financial information. For example, stock-based compensation is an important component of the company's compensation mix, and will continue to result in significant expenses in the company's GAAP results for the foreseeable future, but is not reflected in the non-GAAP measures. Also, other companies, including other companies in Power Integrations' industry, may calculate non-GAAP financial measures differently than the company, limiting their usefulness as a comparative measure.

Note Regarding Forward-Looking Statements

The statements in this press release relating to the company's projected first-quarter financial performance are forward-looking statements, reflecting management's current forecast. These forward-looking statements are based on current information that is, by its nature, subject to rapid and even abrupt changes. Due to risks and uncertainties associated with the company's business, actual results could differ materially from those projected or implied by management's forward-looking statements. These risks and uncertainties include, but are not limited to: changes and shifts in customer demand away from products that utilize the company's integrated circuits to products that do not incorporate the company's products; the company's ability to maintain and establish strategic relationships; the effects of competition; the risks inherent in the development and delivery of complex technologies; the outcome and cost of patent litigation; the company's ability to attract, retain and motivate qualified personnel; the emergence of new markets for the company's products and services; the company's ability to compete in those markets based on timeliness, cost and market demand; and fluctuations in currency exchange rates. In addition, new product introductions and design wins are subject to the risks and uncertainties that typically accompany development and delivery of complex technologies to the marketplace, including product development delays and defects and market acceptance of the new products. These and other risk factors are more fully explained under the caption "Risk Factors" in the company's most recent quarterly report on Form 10-Q, filed with the Securities and Exchange Commission on November 9, 2007. The company is under no obligation (and expressly disclaims any obligation) to update or alter its forward-looking statements, whether as a result of new information, future events or otherwise.

POWER INTEGRATIONS, INC.
CONSOLIDATED STATEMENTS OF OPERATIONS
(in thousands, except per-share amounts)

	Three Months Ended			Twelve Months Ended	
	Dec. 31, 2007	Sept. 30, 2007	Dec. 31, 2006	Dec. 31, 2007	Dec. 31, 2006

NET REVENUES	$ 52,680	$ 49,806	$ 41,281	$191,043	$162,403
COST OF REVENUES	24,661	23,409	19,172	87,558	73,794
GROSS PROFIT	28,019	26,397	22,109	103,485	88,609
OPERATING EXPENSES:					
Research and development	6,702	6,664	6,257	25,176	24,415
Sales and marketing	7,452	6,976	6,658	26,940	25,712
General and administrative	5,846	6,475	7,916	24,249	34,648
In-process research and development	1,370	--	--	1,370	--
Total Operating Expenses	21,370	20,115	20,831	77,735	84,775
INCOME FROM OPERATIONS	6,649	6,282	1,278	25,750	3,834
OTHER INCOME, net	2,739	1,917	1,567	7,962	5,924
INSURANCE REIMBURSEMENT	116	--	--	839	--
INCOME BEFORE PROVISION FOR INCOME TAXES	9,504	8,199	2,845	34,551	9,758
PROVISION FOR INCOME TAXES	2,916	1,446	(192)	7,927	333
NET INCOME	$ 6,588	$ 6,753	$ 3,037	$ 26,624	$ 9,425
EARNINGS PER SHARE:					
Basic	$ 0.22	$ 0.23	$ 0.11	$ 0.92	$ 0.32
Diluted	$ 0.20	$ 0.22	$ 0.10	$ 0.85	$ 0.31
SHARES USED IN PER-SHARE CALCULATION:					
Basic	29,741	28,789	28,658	28,969	29,059
Diluted	32,269	31,342	30,656	31,254	30,819
SUPPLEMENTAL INFORMATION:					
Stock-based compensation expenses included in:					
Cost of revenues	$ 330	$ 326	$ 343	$ 1,268	$ 1,250

Research and development	1,180	1,088	993	3,829	$ 4,329
Sales and marketing	1,304	1,452	1,231	4,620	$ 5,506
General and administrative	1,006	1,041	1,071	3,548	4,375
Total stock-based compensation expense	$ 3,820	$ 3,907	$ 3,638	$ 13,265	$ 15,460
Operating expenses include the following:					
Patent-litigation expenses	$ 1,262	$ 574	$ 1,482	$ 2,945	$ 6,965
Special investigation/ restatement expenses	$ 409	$ 1,735	$ 2,799	$ 5,366	$ 13,697

POWER INTEGRATIONS, INC.
SUPPLEMENTAL RECONCILIATION OF NON-GAAP FINANCIAL MEASURES TO GAAP RESULTS
(in thousands, except per-share amounts)

	Three Months Ended			Twelve Months Ended	
	Dec. 31, 2007	Sept. 30, 2007	Dec. 31, 2006	Dec. 31, 2007	Dec. 31, 2006
RECONCILIATION OF GROSS PROFIT MARGIN					
GAAP gross profit	$ 28,019	$ 26,397	$ 22,109	$103,485	$ 88,609
GAAP gross profit margin	53.2%	53.0%	53.6%	54.2%	54.6%
Stock-based compensation expense included in cost of revenues	330	326	343	1,268	1,250
Non-GAAP gross profit excluding stock-based compensation	28,349	26,723	22,452	104,753	89,859
Non-GAAP gross profit margin	53.8%	53.7%	54.4%	54.8%	55.3%
RECONCILIATION OF OPERATING MARGIN					
GAAP income from operations	$ 6,649	$ 6,282	$ 1,278	$ 25,750	$ 3,834
GAAP operating					

margin	12.6%	12.6%	3.1%	13.5%	2.4%
Stock-based compensation expense included in cost of revenues and operating expenses:					
Cost of revenues	330	326	343	1,268	1,250
Research and development	1,180	1,088	993	3,829	4,329
Sales and marketing	1,304	1,452	1,231	4,620	5,506
General and administrative	1,006	1,041	1,071	3,548	4,375
Total	3,820	3,907	3,638	13,265	15,460
In-process research and development	1,370	--	--	1,370	--
Non-GAAP income from operations excluding stock-based compensation and IPRD charge	11,839	10,189	4,916	40,385	19,294
Non-GAAP operating margin	22.5%	20.5%	11.9%	21.1%	11.9%
RECONCILIATION OF NET INCOME PER SHARE (DILUTED)					
GAAP net income	$ 6,588	$ 6,753	$ 3,037	$ 26,624	$ 9,425
Adjustments to GAAP net income					
Total stock-based compensation	3,820	3,907	3,638	13,265	15,460
In-process research and development charge	1,370	--	--	1,370	--
Difference between GAAP and non-GAAP provision for income taxes	595	(512)	(829)	(448)	(3,074)
Non-GAAP net income	$ 12,373	$ 10,148	$ 5,846	$ 40,811	$ 21,811
Average shares outstanding for calculation of non-GAAP income per share (diluted)	32,269	31,342	30,656	31,254	30,819

Non-GAAP income per share excluding stock-based compensation (diluted)	$ 0.38	$ 0.32	$ 0.19	$ 1.31	$ 0.71

Note on use of non-GAAP financial measures:
Effective January 1, 2006, Power Integrations adopted SFAS 123R, which requires the company to recognize compensation expenses relating to stock-based payments. In addition to the company's consolidated financial statements, which are prepared according to GAAP, the company provides certain non-GAAP financial information that excludes expenses recognized under SFAS 123R, and the related tax effects. Also excluded from non-GAAP measures are certain acquisition-related expenses, such as charges for the write-off of purchased in-process research and development. The company uses these non-GAAP measures in its own financial and operational decision-making processes and in setting performance targets for employee-compensation purposes. Further, the company believes that these non-GAAP measures offer an important analytical tool to help investors understand the company's core operating results and trends, and to facilitate comparability with the company's historical results and with the operating results of other companies that provide similar non-GAAP measures. These non-GAAP measures have certain limitations as analytical tools and are not meant to be considered in isolation or as a substitute for GAAP financial information

POWER INTEGRATIONS, INC.
CONSOLIDATED BALANCE SHEETS
(in thousands)

	December 31, 2007	September 30, 2007	December 31, 2006
ASSETS			
CURRENT ASSETS:			
Cash and cash equivalents	$ 118,353	$ 162,402	$ 124,937
Restricted cash	1,300	1,300	1,300
Short-term investments	85,821	13,262	2,506
Accounts receivable	14,221	14,652	10,489
Inventories	19,696	19,944	28,280
Deferred tax assets	1,259	2,047	2,199
Prepaid expenses and other current assets	2,957	3,794	4,009
Total current assets	243,607	217,401	173,720
INVESTMENTS	--	1,000	3,999
NOTE RECEIVABLE	10,000	10,000	10,000
PROPERTY AND EQUIPMENT, net	56,740	55,085	53,475
INTANGIBLE ASSETS, NET	6,262	5,315	5,895
GOODWILL	1,824	--	--
DEFERRED TAX ASSETS	15,544	13,190	13,485
OTHER ASSETS	1,122	272	285
Total assets	$ 335,099	$ 302,263	$ 260,859

LIABILITIES AND STOCKHOLDERS' EQUITY			
CURRENT LIABILITIES:			
Accounts payable	$ 10,792	$ 10,109	$ 8,592
Accrued payroll and related expenses	9,212	7,044	8,668
Income taxes payable	852	1,608	14,509
Deferred income on sales to distributors	5,226	5,574	4,901
Accrued professional & other fees	1,844	3,868	3,294
Other accrued liabilities	641	126	129
Total current liabilities	28,567	28,329	40,093
LONG-TERM INCOME TAXES PAYABLE	17,042	14,236	--
Total liabilities	45,609	42,565	40,093
STOCKHOLDERS' EQUITY:			
Common stock	30	29	29
Additional paid-in capital	176,282	153,081	135,307
Cumulative translation adjustment	85	83	4
Retained earnings	113,093	106,505	85,426
Total stockholders' equity	289,490	259,698	220,766
Total liabilities stockholders' equity	$ 335,099	$ 302,263	$ 260,859

This news release was distributed by PrimeNewswire, www.primenewswire.com

SOURCE: Power Integrations

Power Integrations, Inc.
Joe Shiffler
(408) 414-8528
jshiffler@powerint.com

(C) Copyright 2008 PrimeNewswire, Inc. All rights reserved.

News Provided by COMTEX

EXHIBIT F
Declaration of Ching-Siang Chen
Highly Confidential

REDACTED

EXHIBIT G
(Second Declaration of K. Chan - Highly Confidential - Filed Under Seal)

REDACTED

EXHIBIT H
(Second Declaration of Li-Jen Wang - Highly Confidential - Filed Under Seal)

REDACTED

EXHIBIT I
(Second Amended Complaint for Patent Infringement - Power Integrations v Fairchild Semiconductor)

IN THE UNITED STATES DISTRICT COURT
FOR THE DISTRICT OF DELAWARE

POWER INTEGRATIONS, INC., a Delaware corporation, Plaintiff, v. FAIRCHILD SEMICONDUCTOR INTERNATIONAL, INC., a Delaware corporation, and FAIRCHILD SEMICONDUCTOR CORPORATION, a Delaware corporation Defendants.	C.A. No. 04 -1371-JJF JURY TRIAL REQUESTED

FIRST AMENDED COMPLAINT FOR PATENT INFRINGEMENT

Plaintiff Power Integrations, Inc. hereby alleges as follows:

THE PARTIES

1. Power Integrations, Inc. ("Power Integrations") is incorporated under the laws of the state of Delaware, and has a regular and established place of business at 5245 Hellyer Avenue, San Jose, California, 95138.

2. Upon information and belief, defendant Fairchild Semiconductor International, Inc. is incorporated under the laws of the state of Delaware, with its headquarters located at 82 Running Hill Road, South Portland, Maine, 04106. Upon information and belief, defendant Fairchild Semiconductor Corporation is incorporated under the laws of the state of Delaware, with its headquarters located at 82 Running Hill Road, South Portland, Maine, 04106. (Fairchild Semiconductor International, Inc. and Fairchild Semiconductor Corporation hereinafter collectively "Fairchild Semiconductor.")

JURISDICTION AND VENUE

3. This action arises under the patent laws of the United States, Title 35 U.S.C. § 1 *et seq.* This Court has subject matter jurisdiction under 28 U.S.C. §§ 1331 and 1338(a).

4. Upon information and belief, this Court has personal jurisdiction over defendants because defendants are incorporated, doing business and advertising in this judicial District.

5. Upon information and belief, venue is proper in this Court pursuant to 28 U.S.C. §§ 1391(b), (c) and 1400 because the defendants are subject to personal jurisdiction in this judicial District.

GENERAL ALLEGATIONS

6. Power Integrations' products include its integrated pulse width modulation ("PWM") integrated circuits that are used in power supplies for electronic devices such as cellular telephones, LCD monitors and computers. These products are sold throughout the United States, including Delaware.

7. Upon information and belief, defendants manufacture PWM integrated circuits devices (e.g., devices intended for use in power conversion applications such as LCD monitor power supplies or battery chargers for portable electronics), and directly and through their affiliates, uses, imports, sells, and offers to sell the same throughout the United States, including Delaware.

FIRST CAUSE OF ACTION

INFRINGEMENT OF U.S. PATENT NO. 6,107,851

8. The allegations of paragraphs 1-7 are incorporated as though fully set forth herein.

9. Power Integrations is now, and has been since its issuance, the assignee and sole owner of all right, title, and interest in United States Patent No. 6,107,851, entitled "Offline Converter with Integrated Softstart and Frequency Jitter" ("the '851

patent"), which was duly and legally issued on August 22, 2000. A true and correct copy of the '851 patent is attached hereto as Exhibit A.

10. Upon information and belief, defendants have been and are now infringing, inducing infringement, and contributing to the infringement of the '851 patent by making, using, importing, selling, and offering to sell devices, including PWM integrated circuit devices, and/or inducing or contributing to the importation, use, offer for sale and sale by others of such devices covered by one or more claims of the '851 patent, all to the injury of Power Integrations.

11. Defendants' acts of infringement have injured and damaged Power Integrations.

12. Defendants' infringement has caused irreparable injury to Power Integrations and will continue to cause irreparable injury until defendants are enjoined from further infringement by this Court.

13. Upon information and belief, Defendants' infringement has been, and continues to be, willful so as to warrant enhancement of damages awarded as a result of its infringement.

SECOND CAUSE OF ACTION

INFRINGEMENT OF U.S. PATENT NO. 6,249,876

14. The allegations of paragraphs 1-7 are incorporated as though fully set forth herein.

15. Power Integrations is now, and has been since its issuance, the assignee and sole owner of all right, title, and interest in United States Patent No. 6,249,876, entitled "Frequency Jittering Control for Varying the Switching Frequency of a Power Supply" ("the '876 patent"), which was duly and legally issued on June 19, 2001. A true and correct copy of the '876 patent is attached hereto as Exhibit B.

16. Upon information and belief, defendants have been and are now infringing, inducing infringement, and contributing to the infringement of the '876 patent

by making, using, importing, selling, and offering to sell devices, including PWM integrated circuit devices and/or inducing or contributing to the importation, use, offer for sale and sale by others of such devices covered by one or more claims of the '876 patent, all to the injury of Power Integrations.

17. Defendants' acts of infringement have injured and damaged Power Integrations.

18. Defendants' infringement has caused irreparable injury to Power Integrations and will continue to cause irreparable injury until defendants are enjoined from further infringement by this Court.

19. Upon information and belief, Defendants' infringement has been, and continues to be, willful so as to warrant enhancement of damages awarded as a result of its infringement.

THIRD CAUSE OF ACTION

INFRINGEMENT OF U.S. PATENT NO. 6,229,366

20. The allegations of paragraphs 1-7 are incorporated as though fully set forth herein.

21. Power Integrations is now, and has been since its issuance, the assignee and sole owner of all right, title, and interest in United States Patent No. 6,229,366, entitled "Off-Line Converter with Integrated Softstart and Frequency Jitter" ("the '366 patent"), which was duly and legally issued on May 8, 2001. A true and correct copy of the '366 patent is attached hereto as Exhibit C.

22. Upon information and belief, defendants have been and are now infringing, inducing infringement, and contributing to the infringement of the '366 patent by making, using, importing, selling, and offering to sell devices, including PWM integrated circuit devices and/or inducing or contributing to the importation, use, offer for

sale and sale by others of such devices covered by one or more claims of the '366 patent, all to the injury of Power Integrations.

23. Defendants' acts of infringement have injured and damaged Power Integrations.

24. Defendants' infringement has caused irreparable injury to Power Integrations and will continue to cause irreparable injury until defendants are enjoined from further infringement by this Court.

25. Upon information and belief, Defendants' infringement has been, and continues to be, willful so as to warrant enhancement of damages awarded as a result of its infringement.

FOURTH CAUSE OF ACTION

INFRINGEMENT OF U.S. PATENT NO. 4,811,075

26. The allegations of paragraphs 1-7 are incorporated as though fully set forth herein.

27. Power Integrations is now, and has been since its issuance, the assignee and sole owner of all right, title, and interest in United States Patent No. 4,811,075, entitled "High Voltage MOS Transistors" ("the '075 patent"), which was duly and legally issued on March 7, 1989. A true and correct copy of the '075 patent is attached hereto as Exhibit D.

28. Upon information and belief, defendants have been and are now infringing, inducing infringement, and contributing to the infringement of the '075 patent by making, using, importing, selling, and offering to sell devices, including PWM integrated circuit devices and/or inducing or contributing to the importation, use, offer for sale and sale by others of such devices covered by one or more claims of the '075 patent, all to the injury of Power Integrations.

29. Defendants' acts of infringement have injured and damaged Power Integrations.

30. Defendants' infringement has caused irreparable injury to Power Integrations and will continue to cause irreparable injury until defendants are enjoined from further infringement by this Court.

31. Upon information and belief, Defendants' infringement has been, and continues to be, willful so as to warrant enhancement of damages awarded as a result of its infringement.

PRAYER FOR RELIEF

WHEREFORE, Plaintiff requests the following relief:

(a) judgment against defendants as to willful infringement of the '851 patent;

(b) judgment against defendants as to willful infringement of the '876 patent;

(c) judgment against defendants as to willful infringement of the '366 patent;

(d) judgment against defendants as to willful infringement of the '075 patent;

(e) a permanent injunction preventing defendants and their officers, directors, agents, servants, employees, attorneys, licensees, successors, assigns, and customers, and those in active concert or participation with any of them, from making, using, importing, offering to sell or selling any devices that infringe any claim of the '851, '876, '366, or '075 patents;

(f) judgment against defendants for money damages sustained as a result of defendants' infringement of the '851, '876, '366, and '075 patents;

(g) that any such money judgment be trebled as a result of the willful nature of Defendants' infringement;

(h) costs and reasonable attorneys' fees incurred in connection with this action pursuant to 35 U.S.C § 285; and

(i) such other and further relief as this Court finds just and proper.

JURY DEMAND

Plaintiff requests trial by jury.

Dated: October 20, 2004

FISH & RICHARDSON P.C.

By: */s/ John F. Horvath*

William J. Marsden, Jr. (#2247)
Sean P. Hayes (#4413)
John F. Horvath (#4557)
919 N. Market Street, Suite 1100
P.O. Box 1114
Wilmington, DE 19801
Telephone: (302) 652-5070
Facsimile: (302) 652-0607

Frank E. Scherkenbach
225 Franklin Street
Boston, MA 02110-2804
Telephone: (617) 542-5070
Facsimile: (617) 542-8906

Michael Kane
60 South Sixth Street
3300 Dain Rauscher Plaza
Minneapolis, MN 55402
Telephone: (612) 335-5070
Facsimile: (612) 288-9696

Howard G. Pollack
Gina M. Steele
Michael R. Headley
500 Arguello Street, Suite 500
Redwood City, CA 94063
Telephone: (650) 839-5070
Facsimile: (650) 839-5071

Attorneys for Plaintiff
POWER INTEGRATIONS, INC.

50286120.doc

EXHIBIT J
(Docket Report, *Power Integrations v. Fairchild Semiconductor,* U.S. District Court - Delaware - Case No. 04-1371)

PATENT, PaperDocuments

I. U.S. District Court
District of Delaware (Wilmington)
CIVIL DOCKET FOR CASE #: 1:04-cv-01371-JJF

Power Integrations v. Fairchild Semicond., et al
Assigned to: Judge Joseph J. Farnan, Jr.
Demand: $0
Related Cases: 1:07-cv-00187-JJF
1:07-cv-00633-JJF-LPS
Cause: 35:271 Patent Infringement

Date Filed: 10/20/2004
Jury Demand: Both
Nature of Suit: 830 Patent
Jurisdiction: Federal Question

Plaintiff

Power Integrations, Inc.
a Delaware corporation

represented by **William J. Marsden, Jr.**
Fish & Richardson, P.C.
919 N. Market Street, Suite 1100
P.O. Box 1114
Wilmington, DE 19899-1114
(302) 652-5070
Email: marsden@fr.com
LEAD ATTORNEY
ATTORNEY TO BE NOTICED

John M. Seaman
Abrams & Laster LLP
20 Montchanin Road
Suite 20
Greenville, DE 19807
(302) 778-1000
Fax: (302) 573-3501
Email: jseaman@bmf-law.com
ATTORNEY TO BE NOTICED

Kyle Wagner Compton

Fish & Richardson, P.C.
919 N. Market Street, Suite 1100
P.O. Box 1114
Wilmington, DE 19899-1114
(302)778-8447
Email: kcompton@fr.com
ATTORNEY TO BE NOTICED

Michael R. Headley
Pro Hac Vice
Email: headley@fr.com
ATTORNEY TO BE NOTICED

Sean Paul Hayes
Fish & Richardson, P.C.
919 N. Market Street, Suite 1100
P.O. Box 1114
Wilmington, DE 19899-1114
(302) 652-5070
Email: seanphayes@comcast.net
TERMINATED: 10/04/2006
ATTORNEY TO BE NOTICED

V.

Defendant

Fairchild Semiconductor International, Inc.
a Delaware corporation

represented by

John G. Day
Ashby & Geddes
500 Delaware Avenue, 8th Floor
P.O. Box 1150
Wilmington, DE 19899
(302) 654-1888
Email: jday@ashby-geddes.com
LEAD ATTORNEY
ATTORNEY TO BE NOTICED

Steven J. Balick
Ashby & Geddes
500 Delaware Avenue, 8th Floor
P.O. Box 1150
Wilmington, DE 19899
(302) 654-1888
Email: sbalick@ashby-geddes.com
LEAD ATTORNEY
ATTORNEY TO BE NOTICED

Bas de Blank
Pro Hac Vice
Email: basdeblank@orrick.com
ATTORNEY TO BE NOTICED

George Guy Guy, III.
Pro Hac Vice
Email: hopguy@orrick.com
ATTORNEY TO BE NOTICED

Lauren E. Maguire
Ashby & Geddes
500 Delaware Avenue, 8th Floor
P.O. Box 1150
Wilmington, DE 19899
(302) 654-1888
Email: lmaguire@ashby-geddes.com
ATTORNEY TO BE NOTICED

Tiffany Geyer Lydon
Ashby & Geddes
500 Delaware Avenue, 8th Floor
P.O. Box 1150
Wilmington, DE 19899
(302) 654-1888
Email: tlydon@ashby-geddes.com
ATTORNEY TO BE NOTICED

Defendant

Fairchild Semiconductor Corporation
a Delaware corporation

represented by

John G. Day
(See above for address)
LEAD ATTORNEY
ATTORNEY TO BE NOTICED

Steven J. Balick
(See above for address)
LEAD ATTORNEY
ATTORNEY TO BE NOTICED

Bas de Blank
(See above for address)
ATTORNEY TO BE NOTICED

George Guy Guy, III.

(See above for address)
ATTORNEY TO BE NOTICED

Lauren E. Maguire
(See above for address)
ATTORNEY TO BE NOTICED

Tiffany Geyer Lydon
(See above for address)
ATTORNEY TO BE NOTICED

Material Witness

LG Electronics USA Inc. represented by **Steven J. Balick**
(See above for address)
LEAD ATTORNEY
ATTORNEY TO BE NOTICED

Tiffany Geyer Lydon
(See above for address)
LEAD ATTORNEY
ATTORNEY TO BE NOTICED

Material Witness

Paul Horowitz

V.

Movant

Intersil Corporation represented by **John G. Day**
(See above for address)
LEAD ATTORNEY
ATTORNEY TO BE NOTICED

Counter Claimant

Fairchild Semiconductor International, Inc. represented by **Steven J. Balick**
(See above for address)
LEAD ATTORNEY
ATTORNEY TO BE NOTICED

Counter Claimant

Fairchild Semiconductor Corporation represented by **Steven J. Balick**
(See above for address)
LEAD ATTORNEY
ATTORNEY TO BE NOTICED

V.

Counter Defendant

Power Integrations, Inc. represented by **William J. Marsden, Jr.**
(See above for address)
LEAD ATTORNEY
ATTORNEY TO BE NOTICED

Counter Claimant

Fairchild Semiconductor International, Inc.
a Delaware corporation represented by **John G. Day**
(See above for address)
LEAD ATTORNEY
ATTORNEY TO BE NOTICED

Counter Claimant

Fairchild Semiconductor Corporation
a Delaware corporation represented by **John G. Day**
(See above for address)
LEAD ATTORNEY
ATTORNEY TO BE NOTICED

V.

Counter Defendant

Power Integrations, Inc.
a Delaware corporation represented by **Sean Paul Hayes**
(See above for address)
TERMINATED: 10/04/2006
ATTORNEY TO BE NOTICED

Counter Claimant

Fairchild Semiconductor International, Inc.
a Delaware corporation

Counter Claimant

Fairchild Semiconductor Corporation
a Delaware corporation

V.

Counter Defendant

Power Integrations, Inc.
a Delaware corporation

Date Filed	#	Docket Text
10/20/2004	1	COMPLAINT filed. Magistrate Consent Notice to Pltf. FILING FEE $ 150.00 RECEIPT # 137075 (els) (Entered: 10/21/2004)
10/20/2004		DEMAND for jury trial by Power Integrations (els) (Entered: 10/21/2004)
10/20/2004		SUMMONS(ES) issued for Fairchild Semicond., Fairchild Semi Corp (els) (Entered: 10/21/2004)
10/20/2004	2	Report to Commissioner of Patents and Trademarks. Exit original. RE: 6,107,851, 6,249,876 B1, 6,229,366 B1, 4,81,075 (els) (Entered: 10/21/2004)
10/20/2004	3	Disclosure Statement pursuant to Rule 7.1 by Power Integrations (els) (Entered: 10/21/2004)
10/21/2004	4	RETURN OF SERVICE executed as to Fairchild Semicond. 10/20/04 Answer due on 11/9/04 for Fairchild Semi Corp (mwm) (Entered: 10/22/2004)
10/21/2004	5	RETURN OF SERVICE executed as to Fairchild Semi Corp 10/20/04 Answer due on 11/9/04 for Fairchild Semicond. (mwm) (Entered: 10/22/2004)
10/27/2004	6	CASE assigned to Judge Joseph J. Farnan Jr. . Notice to all parties. (rjb) (Entered: 10/27/2004)
11/09/2004	7	STIPULATION with proposed order that the ddl. by which defts. must answer or respond to the complaint is ext. to 12/09/04. (afb) (Entered: 11/10/2004)
11/10/2004		So Ordered granting [7-1] stipulation (signed by Judge Joseph J. Farnan Jr.) Notice to all parties. (afb) (Entered: 11/12/2004)

11/10/2004		Deadline updated; reset Answer deadline from 11/09/04 to 12/9/04 for Fairchild Semi Corp, for Fairchild Semicond. per DI #7. (afb) (Entered: 11/12/2004)
12/09/2004	8	ANSWER to complaint and COUNTERCLAIM by Fairchild Semicond., Fairchild Semi Corp (Attorney Stephen Balick); jury demand against Power Integrations (afb) (Entered: 12/10/2004)
12/29/2004	9	ANSWER by Power Integrations to [8-2] defts.' counter claim (afb) (Entered: 01/03/2005)
01/10/2005	10	LETTER to Cnsl. from the Court requesting that cnsl. submit to the Court a Pro. Pretrial Sched. Order by 01/24/05. (afb) (Entered: 01/12/2005)
01/24/2005	11	LETTER to the Court from Sean P. Hayes re: att. pro. sched. order agreed to by the parties. (afb) (Entered: 01/27/2005)
01/25/2005	12	CERTIFICATE OF SERVICE by Fairchild Semicond., Fairchild Semi Corp re: First Set of Request for Admission (Nos. 1-25). (afb) (Entered: 01/27/2005)
01/25/2005	13	CERTIFICATE OF SERVICE by Fairchild Semicond., Fairchild Semi Corp re: First Setof Requests for Production. (afb) (Entered: 01/27/2005)
01/25/2005	14	CERTIFICATE OF SERVICE by Fairchild Semicond., Fairchild Semi Corp re: First Set of Interrogs. Nos. 1-28. (afb) (Entered: 01/27/2005)
01/31/2005	16	CERTIFICATE OF SERVICE by Power Integrations re: Initial Discl. (afb) (Entered: 02/03/2005)
02/01/2005	15	CERTIFICATE OF SERVICE by Fairchild Semicond., Fairchild Semi Corp re: Initial Discl. Pursuant to Fed. Rule of Civil Procedure 26 (a). (afb) (Entered: 02/02/2005)
02/04/2005		Deadline updated; set Markman Hearing for 4:00 p.m. on 1/10/06 , set Pretrial Conference for 10:00 a.m. on 5/4/06 per calendar ntc. (afb) Modified on 02/09/2005 (Entered: 02/07/2005)
02/07/2005	17	RULE 16 SCHEDULING ORDER setting Pre-Disc. Discl. ddl. to 01/31/05; Joining of parties ddl. 04/15/05; amending of pleadings on 6/30/05 ; Discovery cutoff 6/30/05, rpts. from retained experts are due from the pty. bearing the burden of proof by 10/10/05, rebuttal expert rpts. by 10/31/05; Deadline for filing dispositive motions 3/1/06; Markman, Pretrial and Trial Cnf. tbd. (signed by Judge Joseph J. Farnan Jr.) copies to: cnsl. (afb) (Entered: 02/08/2005)
02/07/2005	18	ORDER, set Pretrial Conference for 10:00 a.m. on 5/4/06 , set Markman Hearing for 4:00 p.m. on 1/10/06 (signed by Judge Joseph J.

		Farnan Jr.) copies to: cnsl. (afb) (Entered: 02/09/2005)
02/07/2005	19	ORDER (signed by Judge Joseph J. Farnan Jr.) re: the Court's procedure for filing sum. jgm. motions copies to: cnsl. (afb) (Entered: 02/09/2005)
02/08/2005	20	CERTIFICATE OF SERVICE by Power Integrations re: First Set of Doc. Requests (Nos. 1-72); First Set of Interrogs. (Nos. 1-14). (afb) (Entered: 02/09/2005)
02/23/2005	21	MOTION for Pro Hac Vice Appearance of Attorney G. Hopkins Guy, III, Vickie L. Feeman, Raymis H. Kim, Bas de Blank and Duo Chen - filed by Fairchild Semiconductor International, Inc., Fairchild Semiconductor Corporation. (afb,) (Entered: 02/24/2005)
02/25/2005	22	CERTIFICATE OF SERVICE of (1) Responses to Defts.' First Set of Request for Prod.; 92) Responses to Defts.' First Set of Interrogs. (Nos. 1-28); (3) Responses to Defts.' First Set of Request for Admission (Nos. 1-25) by Power Integrations, Inc. (afb,) (Entered: 02/28/2005)
02/25/2005		SO ORDERED, re 21 MOTION for Pro Hac Vice Appearance of Attorney G. Hopkins Guy, III, Vickie L. Feeman, Raymis H. Kim, Bas de Blank and Duo Chen filed by Fairchild Semiconductor International, Inc., Fairchild Semiconductor Corporation . Signed by Judge Joseph J. Farnan, Jr. on 2/25/05. (maw,) (Entered: 02/28/2005)
03/10/2005	23	NOTICE OF SERVICE of Defendants Fairchild Semiconductor International, Inc. and Fairchild Semiconductor Corporation's Responses to Plaintiff Power Integrations, Inc.'s First Set of Interrogatories (Nos. 14) re 20 Certificate of Service by Fairchild Semiconductor International, Inc., Fairchild Semiconductor Corporation, Fairchild Semiconductor International, Inc., Fairchild Semiconductor Corporation. Related document: 20 Certificate of Service filed by Power Integrations, Inc.,.(Day, John) (Entered: 03/10/2005)
03/10/2005	24	NOTICE OF SERVICE of Defendants Fairchild Semiconductor International, Inc. and Fairchild Semiconductor Corporation's Responses to Plaintiff Power Integrations, Inc.'s First Set of Documents Requests (Nos. 1-72) re 20 Certificate of Service by Fairchild Semiconductor International, Inc., Fairchild Semiconductor Corporation, Fairchild Semiconductor International, Inc., Fairchild Semiconductor Corporation. Related document: 20 Certificate of Service filed by Power Integrations, Inc.,.(Day, John) (Entered: 03/10/2005)
03/11/2005	25	Joint MOTION for Protective Order - filed by Power Integrations, Inc.. (Marsden, William) (Entered: 03/11/2005)

03/16/2005	26	ORDER granting 25 Motion for Protective Order . Signed by Judge Joseph J. Farnan, Jr. on 03/16/05. (afb,) (Entered: 03/17/2005)
05/13/2005	27	MOTION for Pro Hac Vice Appearance of Attorney Frank Sherkenbach, Howard Pollack, Gina Steele, Michael Headley - filed by Power Integrations, Inc.. (Attachments: # 1 Text of Proposed Order)(Hayes, Sean) (Entered: 05/13/2005)
05/16/2005		SO ORDERED, re 27 MOTION for Pro Hac Vice Appearance of Attorney Frank Sherkenbach, Howard Pollack, Gina Steele, Michael Headley filed by Power Integrations, Inc. Signed by Judge Joseph J. Farnan, Jr. on 05/16/05. (afb,) (Entered: 05/17/2005)
05/26/2005	28	NOTICE OF SERVICE of PI 2nd Set of Interrogatories to Defendants No. 15-16 by Power Integrations, Inc., Power Integrations, Inc..(Hayes, Sean) (Entered: 05/26/2005)
06/08/2005	29	SEALED MOTION to Compel *production of documents relating to fairchild's manufacturing, sales and offers for sale* - filed by Power Integrations, Inc.. (Marsden, William) (Entered: 06/08/2005)
06/14/2005	30	REDACTED VERSION (D.I. 29) Motion to Compel production of documents relating to Fairchild's manufacturing, sales and offers for sale by Power Integrations, Inc.. (Attachments: # 1 Exhibit A Redacted# 2 Exhibit B# 3 Exhibit C through E)(Marsden, William) Modified on 6/15/2005 (afb,). (Entered: 06/14/2005)
06/15/2005	31	SEALED ANSWERING BRIEF in Opposition re 29 SEALED MOTION to Compel *production of documents relating to fairchild's manufacturing, sales and offers for sale* filed by Fairchild Semiconductor International, Inc., Fairchild Semiconductor Corporation.Reply Brief due date per Local Rules is 6/22/2005. (Day, John) (Entered: 06/15/2005)
06/28/2005	32	NOTICE OF SERVICE of Defendants Fairchild Semiconductor International, Inc. and Fairchild Semiconductor Corporation's Responses to Plaintiff Power Integrations, Inc.'s Second Set of Interrogatories (Nos. 15-16) by Fairchild Semiconductor International, Inc., Fairchild Semiconductor Corporation.(Day, John) (Entered: 06/28/2005)
06/30/2005	33	STIPULATION for Plaintiff to File an Amended Complaint by Power Integrations, Inc., Fairchild Semiconductor International, Inc., Fairchild Semiconductor Corporation. (Attachments: # 1 Exhibit A and B)(Day, John) (Entered: 06/30/2005)
07/01/2005	34	NOTICE OF SERVICE of Plaintiff's Responses to 2nd Set of Requests for Production; Plaintiff's Supplemental Responses to 1st Set of Interrogatories Nos. 1, 7, 8, 9, 11, 12, 14, 15, 16, 17, 19, 21, 23, 24, 26

		and 27; Plaintiff's Responses to 2nd Set of Interrogatories (29-44) by Power Integrations, Inc..(Horvath, John) (Entered: 07/01/2005)
07/07/2005		SO ORDERED, re 33 Stipulation filed by Power Integrations, Inc., Fairchild Semiconductor International, Inc., Fairchild Semiconductor Corporation . Signed by Judge Joseph J. Farnan, Jr. on 07/07/05. (afb,) (Entered: 07/08/2005)
07/07/2005	35	FIRST AMENDED COMPLAINT FOR PATENT INFRINGEMENT against Fairchild Semiconductor International Inc. and Fairchild Semiconductor Corporation- filed by Power Integrations, Inc.(afb,) (Entered: 07/08/2005)
07/08/2005	36	NOTICE OF SERVICE of Defendants Fairchild Semiconductor International, Inc. and Fairchild Semiconductor Corporation's Supplemental Responses to Plaintiff Power Integrations, Inc.'s Second Set of Interrogatories No. 9 by Fairchild Semiconductor International, Inc., Fairchild Semiconductor Corporation.(Day, John) (Entered: 07/08/2005)
07/08/2005	37	NOTICE OF SERVICE of Defendants Fairchild Semiconductor International, Inc. and Fairchild Semiconductor Corporation's Supplemental Responses to Interrogatory Nos. 1-3, 6, 8-13 by Fairchild Semiconductor International, Inc., Fairchild Semiconductor Corporation.(Day, John) (Entered: 07/08/2005)
07/08/2005	38	NOTICE OF SERVICE of Defendants Fairchild Semiconductor International, Inc. and Fairchild Semiconductor Corporation's Indentification of Fact Witnesses by Fairchild Semiconductor International, Inc., Fairchild Semiconductor Corporation.(Day, John) (Entered: 07/08/2005)
07/11/2005	39	ANSWER to Amended Complaint *for Patent Infringement and Demand for Jury Trial*, COUNTERCLAIM against Power Integrations, Inc. by Fairchild Semiconductor International, Inc., Fairchild Semiconductor Corporation. (Attachments: # 1 Exhibit A# 2 Exhibit B# 3 Exhibit C# 4 Exhibit D# 5 Exhibit E# 6 Exhibit F)(Day, John) (Entered: 07/11/2005)
08/01/2005	40	DEFICIENCY NOTICE by the Court issued to John Day re 31 SEALED Answering Brief in Opposition. rmks: Redacted copy of sealed document not received within 5 business days. (afb,) (Entered: 08/01/2005)
08/01/2005	41	ANSWER to Counterclaim by Power Integrations, Inc., Power Integrations, Inc.(a Delaware corporation).(Hayes, Sean) (Entered: 08/01/2005)
08/01/2005	42	NOTICE OF SERVICE of Defendants Fairchild Semiconductor

		International, Inc. and Fairchild Semiconductor Corporation's Identification of Claim Terms by Fairchild Semiconductor International, Inc., Fairchild Semiconductor Corporation.(Day, John) (Entered: 08/01/2005)
08/02/2005	43	NOTICE OF SERVICE of Defendants Fairchild Semiconductor International, Inc. and Fairchild Semiconductor Corporation's Second Set of Requests for Admission (Nos. 26-43) by Fairchild Semiconductor International, Inc., Fairchild Semiconductor Corporation.(Day, John) (Entered: 08/02/2005)
08/02/2005	44	NOTICE OF SERVICE of Defendants Fairchild Semiconductor International, Inc. and Fairchild Semiconductor Corporation's Third Set of Interrogatories (Nos. 45-47) by Fairchild Semiconductor International, Inc., Fairchild Semiconductor Corporation.(Day, John) (Entered: 08/02/2005)
08/04/2005	45	REDACTED VERSION of 31 Answering Brief in Opposition, *to Plaintiff's Motion to Compel* by Fairchild Semiconductor International, Inc., Fairchild Semiconductor Corporation. (Attachments: # 1 Exhibit A# 2 Exhibit B# 3 Exhibit C# 4 Exhibit D# 5 Exhibit E part 1# 6 Exhibit E part 2# 7 Exhibit F# 8 Exhibit G)(Day, John) (Entered: 08/04/2005)
08/05/2005	46	SEALED MOTION to Compel - filed by Fairchild Semiconductor International, Inc., Fairchild Semiconductor Corporation. (Day, John) (Entered: 08/05/2005)
08/08/2005	47	MOTION to Amend/Correct *the Complaint, or in the Alternative, to Compel Defendants to Produce Witnesses* - filed by Power Integrations, Inc.. (Attachments: # 1 Exhibit A & B - Clean/Blacklined Versions of 2nd Amended Complaint)(Hayes, Sean) (Entered: 08/08/2005)
08/08/2005	48	PROPOSED ORDER re Motion to Amend Complaint re 47 MOTION to Amend/Correct *the Complaint, or in the Alternative, to Compel Defendants to Produce Witnesses* by Power Integrations, Inc.. (Hayes, Sean) (Entered: 08/08/2005)
08/08/2005	49	PROPOSED ORDER re Motion to Compel Witnesses re 47 MOTION to Amend/Correct *the Complaint, or in the Alternative, to Compel Defendants to Produce Witnesses* by Power Integrations, Inc.. (Hayes, Sean) (Entered: 08/08/2005)
08/08/2005	50	MOTION Shorten Briefing Schedule re 47 MOTION to Amend/Correct *the Complaint, or in the Alternative, to Compel Defendants to Produce Witnesses* - filed by Power Integrations, Inc.. (Attachments: # 1 Proposed Order)(Hayes, Sean) (Entered:

		08/08/2005)
08/08/2005	51	MEMORANDUM in Support re 50 MOTION Shorten Briefing Schedule re 47 MOTION to Amend/Correct *the Complaint, or in the Alternative, to Compel Defendants to Produce Witnesses* filed by Power Integrations, Inc..Answering Brief/Response due date per Local Rules is 8/22/2005. (Hayes, Sean) (Entered: 08/08/2005)
08/08/2005	52	DECLARATION re 47 MOTION to Amend/Correct *the Complaint, or in the Alternative, to Compel Defendants to Produce Witnesses*, 50 MOTION Shorten Briefing Schedule re 47 MOTION to Amend/Correct *the Complaint, or in the Alternative, to Compel Defendants to Produce Witnesses of Michael R. Headley* by Power Integrations, Inc.. (Attachments: # 1 Exhibit 1 - 3)(Hayes, Sean) (Entered: 08/08/2005)
08/09/2005	53	NOTICE to Take Deposition of Fairchild Semiconductor International, Inc. and Fairchild Semiconductor Corporation on September 1, 2005 by Power Integrations, Inc..(Hayes, Sean) (Entered: 08/09/2005)
08/09/2005	54	MEMORANDUM ORDER granting in part and denying in part Power Integrations 29 Motion to Compel . Signed by Judge Joseph J. Farnan, Jr. on 08/09/05. (afb,) (Entered: 08/09/2005)
08/10/2005	55	REDACTED VERSION of 46 SEALED MOTION to Compel by Fairchild Semiconductor International, Inc., Fairchild Semiconductor Corporation. (Attachments: # 1 Exhibits A through J)(Day, John) (Entered: 08/10/2005)
08/10/2005		Minute Entry for proceedings held before Judge Joseph J. Farnan, Jr. : Telephone Conference held on 8/10/2005. DECISION: Second Telecnf. to be held on 08/23/05 at 10:30 a.m. regarding the parties discovery disputes. Letter responses to be filed by 08/22/05. (afb,) (Entered: 08/12/2005)
08/11/2005	58	ORDER that a second Telephone Conference regarding the parties discovery disputes will be held on 8/23/2005 at 10:30 AM in Courtroom 4B before Honorable Joseph J. Farnan, Jr.; Signed by Judge Joseph J. Farnan, Jr. on 08/11/05. (afb,) (Entered: 08/15/2005)
08/12/2005	56	NOTICE OF SERVICE of Plaintiff's Supplemental Responses to Defendants' First and Second Sets of Interrogatories (Nos. 22, 26, 27, 33, 35, 37 and 40) by Power Integrations, Inc..(Hayes, Sean) (Entered: 08/12/2005)
08/12/2005	57	SEALED ANSWERING BRIEF in Opposition re 46 SEALED MOTION to Compel filed by Power Integrations, Inc..Reply Brief due date per Local Rules is 8/19/2005. (Marsden, William) (Entered: 08/12/2005)

08/17/2005	59	REDACTED VERSION of 57 Answering Brief in Opposition *to Defendants First Motion to Compel* by Power Integrations, Inc.. (Attachments: # 1 Exhibit A - G# 2 Exhibit Exhibit G-R)(Hayes, Sean) (Entered: 08/17/2005)
08/18/2005	60	NOTICE to Take Deposition of Jin-Ho Choi on September 12, 2005 by Power Integrations, Inc..(Hayes, Sean) (Entered: 08/18/2005)
08/18/2005	61	NOTICE to Take Deposition of Jon Ewald on September 12, 2005 by Power Integrations, Inc..(Hayes, Sean) (Entered: 08/18/2005)
08/18/2005	62	NOTICE to Take Deposition of Hubertus R. Engelbrechten on September 12, 2005 by Power Integrations, Inc..(Hayes, Sean) (Entered: 08/18/2005)
08/18/2005	63	NOTICE to Take Deposition of Gary Dolney on September 12, 2005 by Power Integrations, Inc..(Hayes, Sean) (Entered: 08/18/2005)
08/18/2005	64	NOTICE to Take Deposition of Stephen Schott on September 12, 2005 by Power Integrations, Inc..(Hayes, Sean) (Entered: 08/18/2005)
08/18/2005	65	Letter ANSWERING BRIEF in Opposition re 47 MOTION to Amend/Correct *the Complaint, or in the Alternative, to Compel Defendants to Produce Witnesses* filed by Fairchild Semiconductor International, Inc., Fairchild Semiconductor Corporation.Reply Brief due date per Local Rules is 8/25/2005. (Attachments: # 1 Exhibit A-H)(Day, John) (Entered: 08/18/2005)
08/18/2005	66	NOTICE to Take Deposition of C.S. Lim on September 1, 2005 by Power Integrations, Inc..(Hayes, Sean) (Entered: 08/18/2005)
08/18/2005	67	NOTICE to Take Deposition of Robert Gendron on September 12, 2005 by Power Integrations, Inc..(Hayes, Sean) (Entered: 08/18/2005)
08/18/2005	68	NOTICE to Take Deposition of Stephen Jensen on September 12, 2005 by Power Integrations, Inc..(Hayes, Sean) (Entered: 08/18/2005)
08/18/2005	69	NOTICE to Take Deposition of Brent Rowe on September 12, 2005 by Power Integrations, Inc..(Hayes, Sean) (Entered: 08/18/2005)
08/18/2005	70	NOTICE to Take Deposition of Dan Godbout on September 12, 2005 by Power Integrations, Inc..(Hayes, Sean) (Entered: 08/18/2005)
08/18/2005	71	NOTICE to Take Deposition of Kyung Oun Jang on September 7, 2005 by Power Integrations, Inc..(Hayes, Sean) (Entered: 08/18/2005)
08/18/2005	72	NOTICE to Take Deposition of C.K. Jeon on September 1, 2005 by Power Integrations, Inc..(Hayes, Sean) (Entered: 08/18/2005)
08/18/2005	73	NOTICE to Take Deposition of Jinsub Han on September 5, 2005 by Power Integrations, Inc..(Hayes, Sean) (Entered: 08/18/2005)

08/18/2005	74	NOTICE to Take Deposition of Sang-Tae IM on September 1, 2005 by Power Integrations, Inc..(Hayes, Sean) (Entered: 08/18/2005)
08/18/2005	75	NOTICE to Take Deposition of Hang Seok Choi on September 1, 2005 by Power Integrations, Inc..(Hayes, Sean) (Entered: 08/18/2005)
08/18/2005	76	NOTICE to Take Deposition of E.S. Kim on September 1, 2005 by Power Integrations, Inc..(Hayes, Sean) (Entered: 08/18/2005)
08/18/2005	77	NOTICE to Take Deposition of Y.C. Ryu on September 1, 2005 by Power Integrations, Inc..(Hayes, Sean) (Entered: 08/18/2005)
08/18/2005	78	NOTICE to Take Deposition of Deok J. Kim on September 1, 2005 by Power Integrations, Inc..(Hayes, Sean) (Entered: 08/18/2005)
08/18/2005	79	NOTICE to Take Deposition of Robert Conrad on September 12, 2005 by Power Integrations, Inc..(Hayes, Sean) (Entered: 08/18/2005)
08/18/2005	80	NOTICE to Take Deposition of J.W. Lee on September 9, 2005 by Power Integrations, Inc..(Hayes, Sean) (Entered: 08/18/2005)
08/18/2005	81	NOTICE to Take Deposition of Atman Chau on September 1, 2005 by Power Integrations, Inc..(Hayes, Sean) (Entered: 08/18/2005)
08/18/2005	82	NOTICE to Take Deposition of Min Hwan Kim on September 1, 2005 by Power Integrations, Inc..(Hayes, Sean) (Entered: 08/18/2005)
08/18/2005	83	NOTICE to Take Deposition of Dr. Dongyoung Huh on September 1, 2005 by Power Integrations, Inc..(Hayes, Sean) (Entered: 08/18/2005)
08/19/2005	84	NOTICE to Take Deposition of Philip W. Woo on September 19, 2005 by Power Integrations, Inc..(Hayes, Sean) (Entered: 08/19/2005)
08/19/2005	85	NOTICE to Take Deposition of Robert Morrill on September 20, 2005 by Power Integrations, Inc..(Hayes, Sean) (Entered: 08/19/2005)
08/22/2005	86	Letter to Honorable Joseph J. Farnan from William J. Marsden, Jr. regarding PI's Motion to Amend Complaint re 47 MOTION to Amend/Correct *the Complaint, or in the Alternative, to Compel Defendants to Produce Witnesses*, 65 Answering Brief in Opposition,. (Attachments: # 1 Exhibit A# 2 Exhibit B)(Marsden, William) (Entered: 08/22/2005)
08/23/2005	87	MOTION for Reconsideration re 54 Order on Motion to Compel *for Clarification or in the Alternative for Reconsideration* - filed by Power Integrations, Inc.. (Marsden, William) (Entered: 08/23/2005)
08/23/2005	88	OPENING BRIEF in Support re 87 MOTION for Reconsideration re 54 Order on Motion to Compel *for Clarification or in the Alternative for Reconsideration* filed by Power Integrations, Inc..Answering Brief/Response due date per Local Rules is 9/7/2005. (Marsden,

		William) (Entered: 08/23/2005)
08/23/2005		Minute Entry for proceedings held before Judge Joseph J. Farnan, Jr. : Discovery Conference held on 8/23/2005. DECISION: Pltf.'s Motion to Amend Complaint or, in the alt., to Compel Defts. to Produce Witnesses is DENIED as to amendment of the complaint and GRANTED as to production of witnesses. (Court Reporter Heather from Hawkins ct. rptr.) (afb,) (Entered: 08/25/2005)
08/25/2005	89	ORDER that Pltf.'s 47 Motion to Amend the Complaint or, in the alt., to Compel Defts. to Produce Witnesses is DENIED with regard to amendment of the Complaint and GRANTED with regard to production of witnesses . Signed by Judge Joseph J. Farnan, Jr. on 08/25/05. (afb,) (Entered: 08/26/2005)
08/30/2005	90	NOTICE OF SERVICE of Defendants Fairchild Semiconductor International, Inc.'s and Fairchild Semiconductor Corporation's Second Supplemental Responses to Interrogatory Nos. 6 and 8-10 by Fairchild Semiconductor International, Inc., Fairchild Semiconductor Corporation.(Balick, Steven) (Entered: 08/30/2005)
09/01/2005	91	NOTICE OF SERVICE of Defendants Fairchild Semiconductor International, Inc.'s and Fairchild Semiconductor Corporation's Third Set of Requests for Admission (Nos. 44-50) by Fairchild Semiconductor International, Inc., Fairchild Semiconductor Corporation.(Balick, Steven) (Entered: 09/01/2005)
09/01/2005	92	NOTICE OF SERVICE of Defendants Fairchild Semiconductor International, Inc.'s and Fairchild Semiconductor Corporation's Fourth Set of Interrogatories (Nos. 48-50) by Fairchild Semiconductor International, Inc., Fairchild Semiconductor Corporation.(Balick, Steven) (Entered: 09/01/2005)
09/01/2005	93	NOTICE OF SERVICE of PI Responses to Defendant's 2nd Set of Request for Admission (Nos 26-47) by Power Integrations, Inc..(Marsden, William) (Entered: 09/01/2005)
09/06/2005	94	NOTICE OF SERVICE of Objections and Responses to the Subpoena Directed to Philip W. Woo by Fairchild Semiconductor International, Inc., Fairchild Semiconductor Corporation.(Balick, Steven) (Entered: 09/06/2005)
09/06/2005	95	NOTICE OF SERVICE of Objections and Responses to the Subpoena Directed to Robert B. Morrill by Fairchild Semiconductor International, Inc., Fairchild Semiconductor Corporation.(Balick, Steven) (Entered: 09/06/2005)
09/07/2005	96	ANSWERING BRIEF in Opposition re 87 MOTION for Reconsideration re 54 Order on Motion to Compel *for Clarification or*

		in the Alternative for Reconsideration filed by Fairchild Semiconductor International, Inc., Fairchild Semiconductor Corporation.Reply Brief due date per Local Rules is 9/14/2005. (Attachments: # 1 Exhibit A through E)(Day, John) (Entered: 09/07/2005)
09/08/2005	97	TRANSCRIPT of Telecnf. held on 08/23/05 before Judge Farnan, Jr.; Court Reporter: Heather Triozzi, from Hawkins Ct. Rptr.; (Transcript on file in Clerk's Office) (afb,) (Entered: 09/10/2005)
09/13/2005	98	NOTICE of Appearance by John M. Seaman on behalf of Power Integrations, Inc. (Seaman, John) (Entered: 09/13/2005)
09/13/2005	99	NOTICE of Notice of Deposition and Service of Subpoena to LG Electronics U.S.A., Inc. by Power Integrations, Inc. *(Plaintiff's Notice of Deposition & Service of Subpoena to LG Electronics U.S.A., Inc. Pursuant to Federal Rules of Civil Procedure 30(b)(6) and 45)* (Seaman, John) (Entered: 09/13/2005)
09/13/2005	100	NOTICE OF SERVICE of Notice of Subpoena Directed to James D. Beasom by Fairchild Semiconductor International, Inc., Fairchild Semiconductor Corporation.(Day, John) (Entered: 09/13/2005)
09/13/2005	101	NOTICE OF SERVICE of Notice of Subpoena Directed to Intersil Corporation by Fairchild Semiconductor International, Inc., Fairchild Semiconductor Corporation.(Day, John) (Entered: 09/13/2005)
09/13/2005	102	NOTICE to Take Deposition of James D. Beasom on September 30, 2005 by Fairchild Semiconductor International, Inc., Fairchild Semiconductor Corporation.(Day, John) (Entered: 09/13/2005)
09/15/2005	103	NOTICE OF SERVICE of Plaintiff Power Integrations Responses to Defendants 3d set of interrogatories Nos 45-47 by Power Integrations, Inc..(Hayes, Sean) (Entered: 09/15/2005)
09/16/2005	104	NOTICE to Take Deposition of Salom Electric (America) Company on September 30, 2005 by Power Integrations, Inc..(Marsden, William) (Entered: 09/16/2005)
09/16/2005	105	NOTICE to Take Deposition of Balu Balakrishnan on September 28, 2005 by Fairchild Semiconductor International, Inc., Fairchild Semiconductor Corporation.(Day, John) (Entered: 09/16/2005)
09/16/2005	106	NOTICE to Take Deposition of Cliff Walker on September 30, 2005 by Fairchild Semiconductor International, Inc., Fairchild Semiconductor Corporation.(Day, John) (Entered: 09/16/2005)
09/16/2005	107	NOTICE to Take Deposition of James Beasom on September 30, 2005 by Power Integrations, Inc..(Marsden, William) (Entered: 09/16/2005)
09/16/2005	108	NOTICE OF SERVICE of Bradley J. Bereznak Responses and

		Objections to Notice of Subpoena Pursuant to Federal Rule of Civil Procedure 45; Roger S. Borovoy Responses and Objections to Notice of Subpoena Pursuant to Federal Rule of Civil Procedure 45; Dmitry R. Milikovsky Responses and Objections to Notice of Subpoena Pursuant to Federal Rule of Civil Procedure 45; Thomas E. Schatzel Responses and Objections to Notice of Subpoena Pursuant to Federal Rule of Civil Procedure 45; Bao Q. Tran Responses and Objections to Notice of Subpoena Pursuant to Federal Rule of Civil Procedure 45 by Power Integrations, Inc..(Marsden, William) (Entered: 09/16/2005)
09/19/2005	109	NOTICE to Take Deposition of Thomas Beaver on September 30, 2005 by Power Integrations, Inc..(Marsden, William) (Entered: 09/19/2005)
09/19/2005	110	NOTICE to Take Deposition of hubertus R. Engelbrechten on September 30, 2005 by Power Integrations, Inc..(Marsden, William) (Entered: 09/19/2005)
09/22/2005	111	NOTICE OF SERVICE of (1) Subpoena to Leader Instruments Corporation; (2) Subpoena to HiPro Electronics Co., Ltd., and (3) Subpoena to General Electric Company by Power Integrations, Inc..(Marsden, William) (Entered: 09/22/2005)
09/22/2005	112	STIPULATION TO EXTEND TIME by which non-party LG Electronics U.S.A., Inc. can object to plaitiff's subpoena to September 13, 2005 - filed by LG Electronics U.S.A., Inc.. (Balick, Steven) (Entered: 09/22/2005)
09/28/2005	113	NOTICE to Take Deposition of Jan Brunnberg on October 10, 2005 by Fairchild Semiconductor International, Inc., Fairchild Semiconductor Corporation.(Day, John) (Entered: 09/28/2005)
09/30/2005	114	STIPULATION TO EXTEND TIME by which LG Electronics U.S.A., Inc. can object to plaintiff's subpoena to October 14, 2005 - filed by LG Electronics U.S.A., Inc.. (Balick, Steven) (Entered: 09/30/2005)
10/03/2005		SO ORDERED, re 114 STIPULATION TO EXTEND TIME by which LG Electronics U.S.A., Inc. can object to plaintiff's subpoena to October 14, 2005 filed by LG Electronics U.S.A., Inc.; Signed by Judge Joseph J. Farnan, Jr. on 10/03/05. (afb,) (Entered: 10/03/2005)
10/04/2005		SO ORDERED, re 112 STIPULATION TO EXTEND TIME to October 14, 2005 by which non-party LG Electronics U.S.A., Inc. can object to plaitiff's subpoena filed by LG Electronics USA Inc.; Signed by Judge Joseph J. Farnan, Jr. on 10/04/05. (afb,) (Entered: 10/06/2005)
10/07/2005	115	ORDER that Power Integrations's 50 Motion For Order To Shorten Time For Briefing is DENIED AS MOOT. Signed by Judge Joseph J.

		Farnan, Jr. on 10/07/05. (afb,) Modified on 10/11/2005 (afb,). (Entered: 10/07/2005)
10/11/2005	117	ORDER that Fairchild's 46 Motion to Compel is GRANTED; Power Integrations shall supplement its Interrogatory Responses with additional narrative information within twenty days of the date of this Order. Signed by Judge Joseph J. Farnan, Jr. on 10/11/05. (afb,) (Entered: 10/17/2005)
10/14/2005	116	STIPULATION TO EXTEND TIME for LG Electronics U.S.A., Inc. to object to plaintiff's September 13, 2005 subpoena to November 11, 2005 - filed by LG Electronics USA Inc.. (Balick, Steven) (Entered: 10/14/2005)
10/21/2005	118	NOTICE OF SERVICE of 2nd supp Response to Fairchild 1st set of Interrog (No. 1,7,8,13; Responses and Obj to Fairchild 3d set of RFA Nos 44-50; Responses and Obj. to 4th set of interrogatories No. 48-50 and Responses and obj to subpoena of Blakely Sololokoff and Taylor by Power Integrations, Inc..(Marsden, William) (Entered: 10/21/2005)
10/21/2005		SO ORDERED, re 116 STIPULATION TO EXTEND TIME for LG Electronics U.S.A., Inc. to object to plaintiff's September 13, 2005 subpoena to November 11, 2005 filed by LG Electronics USA Inc. ; Signed by Judge Joseph J. Farnan, Jr. on 10/21/05. (afb,) (Entered: 10/24/2005)
10/26/2005	119	NOTICE to Take Deposition of Balu Balakrishnan on November 17, 2005 by Fairchild Semiconductor International, Inc., Fairchild Semiconductor Corporation.(Maguire, Lauren) (Entered: 10/26/2005)
10/26/2005	120	MOTION to Amend/Correct *the case schedule* - filed by Fairchild Semiconductor International, Inc., Fairchild Semiconductor Corporation. (Balick, Steven) (Entered: 10/26/2005)
10/26/2005	121	DECLARATION re 120 MOTION to Amend/Correct *the case schedule* by Fairchild Semiconductor International, Inc., Fairchild Semiconductor Corporation. (Attachments: # 1 Exhibit A through G)(Balick, Steven) (Entered: 10/26/2005)
10/26/2005	122	MOTION to Expedite *briefing on defendants' motion to amend the case schedule* - filed by Fairchild Semiconductor International, Inc., Fairchild Semiconductor Corporation. (Balick, Steven) (Entered: 10/26/2005)
10/28/2005	123	RESPONSE to Motion re 120 MOTION to Amend/Correct *the case schedule*, 122 MOTION to Expedite *briefing on defendants' motion to amend the case schedule* filed by Power Integrations, Inc.. (Attachments: # 1 Text of Proposed Order Adopting Stipulated REvised Case Schedule)(Marsden, William) (Entered: 10/28/2005)

10/28/2005	124	DECLARATION re 123 Response to Motion, *in Support of Power Integration's Consolidated Opposition to Defendants Expedited Motion to Amend the Schedule and Motion to Shorten time* by Power Integrations, Inc.. (Attachments: # 1 Exhibit A-C)(Marsden, William) (Entered: 10/28/2005)
10/28/2005	125	ORDER that Pltf.'s 87 Motion For Clarification Or, In The Alternative, Reconsideration Of The Court's August 9, 2005 Order (D.I. 87) is DENIED. Signed by Judge Joseph J. Farnan, Jr. on 10/28/05. (afb,) (Entered: 10/28/2005)
10/28/2005	126	REPLY BRIEF re 120 MOTION to Amend/Correct *the case schedule* filed by Fairchild Semiconductor International, Inc., Fairchild Semiconductor Corporation. (Day, John) (Entered: 10/28/2005)
10/31/2005	127	ORDER that the 122 Motion to Shorten Time For Briefing Their Motion To Amend The Schedule (D.I. 122-1) is DENIED AS MOOT; and the alternative relief sought by the Motion To Stay Expert Reports (D.I. 122-2) is GRANTED; The deadline for expert reports is extended from October 31, 3005, to a date to be set by the Court once the pending Motion To Amend The Schedule is resolved. Signed by Judge Joseph J. Farnan, Jr. on 10/31/05. (afb,) (Entered: 10/31/2005)
11/03/2005	128	AMENDED SCHEDULING ORDER: Markman Hearing reset for 2/2/2006 at 01:00 PM in Courtroom 4B before Honorable Joseph J. Farnan, Jr.; Opening brf. ddl. to any dispositive motion shall be filed by 03/01/06; Answer brf. ddl. to any dispositive motion shall be filed by 03/15/06; Reply brf. ddl. to any dispositive motion shall be filed by 03/22/06; Pretrial Conference reset for 5/11/2006 at 11:30 AM in Courtroom 4B before Honorable Joseph J. Farnan, Jr.; (SEE ORDER FOR DETAILS);Signed by Judge Joseph J. Farnan, Jr. on 11/03/05. (afb,) Modified on 11/3/2005 (afb,). Modified on 11/4/2005 (afb,). (Entered: 11/03/2005)
11/07/2005	129	NOTICE to Take Deposition of Douglas Bailey on November 14, 2005 by Fairchild Semiconductor International, Inc., Fairchild Semiconductor Corporation.(Maguire, Lauren) (Entered: 11/07/2005)
11/11/2005	130	MOTION to Quash *(LG ELECTRONICS U.S.A. INC.'S COMBINED (i) OBJECTIONS TO SUBPOENA DUCES TUCEM AND (ii) MOTION TO QUASH SUBPOENA AD TESTIFICANDUM AND FOR A PROTECTIVE ORDER)* - filed by LG Electronics USA Inc.. (Lydon, Tiffany) (Entered: 11/11/2005)
11/11/2005	131	DECLARATION re 130 MOTION to Quash *(LG ELECTRONICS U.S.A. INC.'S COMBINED (i) OBJECTIONS TO SUBPOENA DUCES TUCEM AND (ii) MOTION TO QUASH SUBPOENA AD TESTIFICANDUM AND FOR A PROTECTIVE ORDER)* --

		DECLARATION OF RICHARD C. WINGATE, GENERAL COUNSEL OF LG ELECTRONICS U.S.A. INC. -- by LG Electronics USA Inc.. (Lydon, Tiffany) (Entered: 11/11/2005)
11/11/2005	132	DECLARATION re 130 MOTION to Quash *(LG ELECTRONICS U.S.A. INC.'S COMBINED (i) OBJECTIONS TO SUBPOENA DUCES TUCEM AND (ii) MOTION TO QUASH SUBPOENA AD TESTIFICANDUM AND FOR A PROTECTIVE ORDER)* -- *DECLARATION OF LIONEL M. LAVENUE* -- by LG Electronics USA Inc.. (Attachments: # 1 Exhibit A# 2 Exhibit B# 3 Exhibit C# 4 Exhibit D# 5 Exhibit E# 6 Exhibit F# 7 Exhibit G# 8 Exhibit H# 9 Exhibit I# 10 Exhibit J)(Lydon, Tiffany) (Entered: 11/11/2005)
11/18/2005	133	RESPONSE to Motion re 130 MOTION to Quash *(LG ELECTRONICS U.S.A. INC.'S COMBINED (i) OBJECTIONS TO SUBPOENA DUCES TUCEM AND (ii) MOTION TO QUASH SUBPOENA AD TESTIFICANDUM AND FOR A PROTECTIVE ORDER) -- Power Integrations' Opposition to LG Electronics U.S.A. Inc.'s Combined Objections and Motion to Quash and Motion for a Protective Order* filed by Power Integrations, Inc.. (Attachments: # 1 Exhibit A# 2 Certificate of Service)(Seaman, John) (Entered: 11/18/2005)
11/18/2005	134	DECLARATION re 133 Response to Motion, -- *Declaration of John M. Seaman in Support of Plaintiff's Opposition to LG Electronics U.S.A. Inc.'s Combined Objections and Motion to Quash and Motion for a Protective Order* by Power Integrations, Inc.. (Attachments: # 1 Exhibit A# 2 Exhibit B# 3 Certificate of Service)(Seaman, John) (Entered: 11/18/2005)
11/21/2005	135	ORDER Setting Hearing on Motion 130 MOTION to Quash (LG ELECTRONICS U.S.A. INC.'S COMBINED (i) OBJECTIONS TO SUBPOENA DUCES TUCEM AND (ii) MOTION TO QUASH SUBPOENA AD TESTIFICANDUM AND FOR A PROTECTIVE ORDER): Motion Hearing set for 11/29/2005 at 02:30 PM in Courtroom 4B before Honorable Joseph J. Farnan, Jr.; Signed by Judge Joseph J. Farnan, Jr. on 11/21/05. (afb,) (Entered: 11/21/2005)
11/29/2005	136	REPLY BRIEF In Support of Its Motion To Quash Subpoena (D.I. 130) and For a Protective Order filed by LG Electronics USA Inc. (Balick, Steven) Modified on 11/30/2005 (afb,). Modified on 11/30/2005 (afb,). (Entered: 11/29/2005)
11/29/2005	137	DECLARATION (Supplemental Declaration of Richard C. Wingate) by LG Electronics USA Inc. (Balick, Steven) Modified on 11/30/2005 (afb,). (Entered: 11/29/2005)
11/29/2005	138	DECLARATION (Supplemental Declaration of Lionel M. Lavenue) by LG Electronics USA Inc. (Attachments: # 1 Exhibit K# 2 Exhibit

		L)(Balick, Steven) Modified on 11/30/2005 (afb,). (Entered: 11/29/2005)
11/29/2005		Minute Entry for proceedings held before Judge Joseph J. Farnan, Jr. : Motion Hearing held on 11/29/2005 re 130 MOTION to Quash. DECISION: Order to follow. (Court Reporter Karen McCloskey from Hawkins ct. rptr.) (afb,) (Entered: 11/29/2005)
11/30/2005		CORRECTING ENTRY: Reply Brief (D.I. 136), Declaration (D.I. 137), and Declaration (D.I. 138) were linked to the Motion to Quash (D.I. 130). (afb,) (Entered: 11/30/2005)
12/02/2005	139	MOTION to Compel *Damages Discovery* - filed by Power Integrations, Inc.. (Attachments: # 1 Text of Proposed Order)(Hayes, Sean) (Entered: 12/02/2005)
12/02/2005	140	DECLARATION re 139 MOTION to Compel *Damages Discovery of Michael Headley* by Power Integrations, Inc.. (Attachments: # 1 Exhibit)(Hayes, Sean) (Entered: 12/02/2005)
12/02/2005	141	MEMORANDUM OPINION re: D.I. 130 Motion. Signed by Judge Joseph J. Farnan, Jr. on 12/02/05. (dlk) (Entered: 12/02/2005)
12/02/2005	142	ORDER re 141 Memorandum Opinion, GRANTING 130 MOTION TO QUASH SUBPOENA AD TESTIFICANDUM AND FOR A PROTECTIVE ORDER and DENYING AS MOOT OBJECTIONS TO SUBPOENA DUCES TUCEM filed by LG Electronics USA Inc., Signed by Judge Joseph J. Farnan, Jr. on 12/02/2005. (dlk) (Entered: 12/02/2005)
12/05/2005	143	NOTICE OF SERVICE of PI Supplemental Response to Fairchild 2nd & 3d Set of Interrogatories by Power Integrations, Inc..(Hayes, Sean) (Entered: 12/05/2005)
12/05/2005	144	NOTICE OF SERVICE of PI Expert Reports of Blauschild and Shields on Infringement by Power Integrations, Inc..(Hayes, Sean) (Entered: 12/05/2005)
12/05/2005	145	NOTICE OF SERVICE of Vahe Sarkissian Response and Obj to Subpoena by Power Integrations, Inc..(Hayes, Sean) (Entered: 12/05/2005)
12/05/2005	146	NOTICE OF SERVICE of Edward Ross Responses and Objections to Subpoena by Power Integrations, Inc..(Hayes, Sean) (Entered: 12/05/2005)
12/05/2005	147	TRANSCRIPT of Motion Hearing held on November 29, 2005 before Judge Farnan, Jr.; Court Reporter: Karen McCloskey from Hawkins ct. rptr. (Transcript on file in Clerk's Office) (afb,) (Entered: 12/06/2005)

12/14/2005	148	ANSWERING BRIEF in Opposition re 139 MOTION to Compel *Damages Discovery* filed by Fairchild Semiconductor International, Inc., Fairchild Semiconductor Corporation.Reply Brief due date per Local Rules is 12/21/2005. (Day, John) (Entered: 12/14/2005)
12/14/2005	149	DECLARATION re 148 Answering Brief in Opposition *to Plaintiff's Motion to Compel Damages Discovery* by Fairchild Semiconductor International, Inc., Fairchild Semiconductor Corporation. (Attachments: # 1 Exhibit A through I)(Day, John) (Entered: 12/14/2005)
12/16/2005	150	Letter to The Clerk from John M. Seaman regarding amending the cover page of the Memorandum Opinion in the above matter dated 12/02/05. (afb,) (Entered: 12/21/2005)
12/20/2005	151	ORDER that the attached corrected cover page is substituted for the original cover page issued with the December 2, 2005 Memorandum Opinion. Signed by Judge Joseph J. Farnan, Jr. on 12/20/05. (Attachments: # 1 attachment)(afb,) (Entered: 12/21/2005)
12/28/2005	152	CLAIM CONSTRUCTION OPENING BRIEF filed by Power Integrations, Inc.. (Marsden, William) (Entered: 12/28/2005)
12/28/2005	153	SEALED DECLARATION re 152 Claim Construction Opening Brief *of Michael R. Headley* by Power Integrations, Inc.. (Marsden, William) (Entered: 12/28/2005)
12/28/2005	154	DECLARATION re 152 Claim Construction Opening Brief *of Mike Shields* by Power Integrations, Inc.. (Marsden, William) (Entered: 12/28/2005)
12/28/2005	155	DECLARATION re 152 Claim Construction Opening Brief *of Robert Blauschild* by Power Integrations, Inc.. (Marsden, William) (Entered: 12/28/2005)
12/28/2005	156	SEALED CLAIM CONSTRUCTION OPENING BRIEF filed by Fairchild Semiconductor International, Inc., Fairchild Semiconductor Corporation. (Day, John) (Entered: 12/28/2005)
01/05/2006	157	REDACTED VERSION of 156 Claim Construction Opening Brief by Fairchild Semiconductor International, Inc., Fairchild Semiconductor Corporation. (Attachments: # 1 Exhibits A through D# 2 Exhibits E through I# 3 Exhibits J through Q)(Maguire, Lauren) (Entered: 01/05/2006)
01/05/2006	158	REDACTED VERSION of 153 Declaration *of Michael Headley ISO Power Integration's Opening Claim Construction Brief* by Power Integrations, Inc.. (Attachments: # 1 Exhibit A-C# 2 Exhibit D-G# 3 Exhibit H-I# 4 Exhibit J-R)(Marsden, William) (Entered: 01/05/2006)

01/11/2006	159	MOTION for Protective Order *re: Deposition of Dell, Inc.* - filed by Fairchild Semiconductor International, Inc., Fairchild Semiconductor Corporation. (Day, John) (Entered: 01/11/2006)
01/11/2006	160	DECLARATION re 159 MOTION for Protective Order *re: Deposition of Dell, Inc.* by Fairchild Semiconductor International, Inc., Fairchild Semiconductor Corporation. (Attachments: # 1 Exhibits A through E)(Day, John) (Entered: 01/11/2006)
01/12/2006	161	ANSWERING BRIEF in Opposition re 159 MOTION for Protective Order *re: Deposition of Dell, Inc.* filed by Power Integrations, Inc..Reply Brief due date per Local Rules is 1/20/2006. (Hayes, Sean) (Entered: 01/12/2006)
01/12/2006	162	SEALED DECLARATION re 161 Answering Brief in Opposition *of Sean P. Hayes re Deposition of Dell* by Power Integrations, Inc.. (Hayes, Sean) (Entered: 01/12/2006)
01/12/2006	163	ORDER granting Defts.' 159 Motion for Protective Order. (SEE ORDER FOR DETAILS). Signed by Judge Joseph J. Farnan, Jr. on 01/12/06. (afb,) (Entered: 01/12/2006)
01/17/2006	164	SEALED CLAIM CONSTRUCTION ANSWERING BRIEF filed by Power Integrations, Inc.. (Hayes, Sean) (Entered: 01/17/2006)
01/17/2006	165	SEALED DECLARATION *of Sean P. Hayes in Support of Power Integrations Responsive Claim Construction Brief* by Power Integrations, Inc.. (Hayes, Sean) (Entered: 01/17/2006)
01/17/2006	166	SEALED CLAIM CONSTRUCTION ANSWERING BRIEF filed by Fairchild Semiconductor International, Inc., Fairchild Semiconductor Corporation. (Maguire, Lauren) (Entered: 01/17/2006)
01/17/2006	167	SEALED DECLARATION re 166 Claim Construction Answering Brief *of Dr. Peter Gwozdz in Support of Defendants' Answering Claim Construction Brief* by Fairchild Semiconductor International, Inc., Fairchild Semiconductor Corporation. (Maguire, Lauren) (Entered: 01/17/2006)
01/17/2006	168	DECLARATION re 166 Claim Construction Answering Brief *of Paul Horowitz in Support of Defendants' Answering Claim Construction Brief* by Fairchild Semiconductor International, Inc., Fairchild Semiconductor Corporation. (Maguire, Lauren) (Entered: 01/17/2006)
01/19/2006	169	NOTICE of Deposition and Subpoena of John Prentice Pursuant to Federal Rule of Civil Procedure 45, Deposition to Take Place on January 26, 2006 by Fairchild Semiconductor International, Inc., Fairchild Semiconductor Corporation (Attachments: # 1 Exhibit A through C)(Maguire, Lauren) (Entered: 01/19/2006)

01/19/2006	170	NOTICE of Deposition and Subpoena of Bob Moore Pursuant to Federal Rule of Civil Procedure 45, Deposition to Take Place on January 27, 2006 by Fairchild Semiconductor International, Inc., Fairchild Semiconductor Corporation (Attachments: # 1 Exhibit A through C)(Maguire, Lauren) (Entered: 01/19/2006)
01/19/2006	171	Amended NOTICE of Deposition and Subpoena of James Beasom Pursuant to Federal Rule of Civil Procedure 45, Deposition to Take Place on January 26, 2006 by Fairchild Semiconductor International, Inc., Fairchild Semiconductor Corporation (Attachments: # 1 Exhibit A through C)(Maguire, Lauren) (Entered: 01/19/2006)
01/23/2006	172	REDACTED VERSION of 166 Claim Construction Answering Brief by Fairchild Semiconductor International, Inc., Fairchild Semiconductor Corporation. (Attachments: # 1 Exhibit R# 2 Exhibit S# 3 Exhibit T# 4 Exhibit U# 5 Exhibit V# 6 Exhibit W# 7 Exhibit X# 8 Exhibit Y# 9 Exhibit Z# 10 Exhibit AA)(Maguire, Lauren) (Entered: 01/23/2006)
01/23/2006	173	REDACTED VERSION of 167 Declaration, *of Dr. Peter Gwozdz in Support of Defendants' Rebuttal Claim Construction Brief* by Fairchild Semiconductor International, Inc., Fairchild Semiconductor Corporation. (Attachments: # 1 Exhibit A# 2 Exhibit B# 3 Exhibit C part 1# 4 Exhibit C part 2# 5 Exhibit C part 3# 6 Exhibit D# 7 Exhibit E# 8 Exhibit F# 9 Exhibit G)(Maguire, Lauren) (Entered: 01/23/2006)
01/23/2006	174	AMENDED DOCUMENT by Fairchild Semiconductor International, Inc., Fairchild Semiconductor Corporation, Fairchild Semiconductor International, Inc., Fairchild Semiconductor Corporation, Fairchild Semiconductor International, Inc.(a Delaware corporation), Fairchild Semiconductor Corporation(a Delaware corporation). *Amended Notice of Deposition and Subpoena of Robert Blauschild Pursuant to Federal Rule of Civil Procedure 45*. (Day, John) (Entered: 01/23/2006)
01/25/2006	175	REDACTED VERSION of 164 Claim Construction Answering Brief *Power Integrations' Responsive Claim Construction Brief* by Power Integrations, Inc.. (Marsden, William) (Entered: 01/25/2006)
01/25/2006	176	REDACTED VERSION of 165 Declaration by Power Integrations, Inc.. (Marsden, William) (Entered: 01/25/2006)
01/26/2006	177	SEALED MOTION to Compel *the Deposition of Leif Lund and Balu Balakrishnan* - filed by Fairchild Semiconductor International, Inc., Fairchild Semiconductor Corporation. (Maguire, Lauren) (Entered: 01/26/2006)
01/30/2006	178	Letter to Ms. Deborah Krett from John G. Day regarding order permitting laptop computers in Courtroom 4B. (Attachments: # 1 Text

		of Proposed Order)(Day, John) (Entered: 01/30/2006)
01/30/2006	179	Letter to Ms. Deborah Krett from William J. Marsden, Jr. regarding permission to bring laptops into Courtroom 4B for 2/2/06 Markman hearing. (Attachments: # 1 Text of Proposed Order)(Marsden, William) (Entered: 01/30/2006)
02/01/2006	180	ORDER permitting attorneys to bring laptop computers into the Courtroom for proceedings commencing on 02/02/06. Signed by Judge Joseph J. Farnan, Jr. on 02/01/06. (afb,) (Entered: 02/01/2006)
02/01/2006	181	ORDER permitting attorneys to bring laptop computers into the Courtroom during the Markman hearing on 02/02/06 . Signed by Judge Joseph J. Farnan, Jr. on 02/01/06. (afb,) (Entered: 02/01/2006)
02/01/2006	182	REDACTED VERSION of 177 SEALED MOTION to Compel *the Deposition of Leif Lund and Balu Balakrishnan* by Fairchild Semiconductor International, Inc., Fairchild Semiconductor Corporation. (Attachments: # 1 Exhibit A part 1# 2 Exhibit A part 2# 3 Exhibit B through L)(Maguire, Lauren) (Entered: 02/01/2006)
02/01/2006	183	Letter to Ms. Deborah Krett from John G. Day regarding correct exhibit to D.I. 166. (Attachments: # 1 Exhibit AA to D.I. 166 (Under Seal))(Day, John) (Entered: 02/01/2006)
02/02/2006	184	ANSWERING BRIEF in Opposition re 177 SEALED MOTION to Compel *the Deposition of Leif Lund and Balu Balakrishnan* filed by Power Integrations, Inc..Reply Brief due date per Local Rules is 2/9/2006. (Marsden, William) (Entered: 02/02/2006)
02/02/2006	185	SEALED DECLARATION re 184 Answering Brief in Opposition *to Defts Motion to Compel the Continued Depositions of Leif Lund and Balu Balakrishnan* by Power Integrations, Inc.. (Marsden, William) (Entered: 02/02/2006)
02/02/2006		Minute Entry for proceedings held before Judge Joseph J. Farnan, Jr. : Discovery Hearing held on 2/2/2006. DECISION: Pltf.'s Motion to Compel Damages Discovery (D.I. 139) is granted with respect to production of sales information and the deposition of H.K. Kim. Defts. must produce the requested design-win tracking database information in Excel format within 15 days. Defts. must make H.K. Kim available for a five-hour deposition in the U.S. within 40 days. (Court Reporter Heather from Hawkins ct. rptr.) (afb,) (Entered: 02/06/2006)
02/02/2006		Minute Entry for proceedings held before Judge Joseph J. Farnan, Jr. : Markman Hearing held on 2/2/2006. Cnsl. presented claim construction argument. (Court Reporter Heather from Hawkins ct. rptr.) (afb,) (Entered: 02/06/2006)

02/03/2006	186	OBJECTIONS by Paul Horowitz, Fairchild Semiconductor International, Inc., Fairchild Semiconductor Corporation *(Paul Horowitz's Response and Objections to Subpoena)*. (Day, John) (Entered: 02/03/2006)
02/06/2006	187	TRANSCRIPT of Discovery Hearing held on 02/02/06 before Judge Farnan, Jr.; Court Reporter: Heather Triozzi from Hawkins ct. rptr. (Transcript on file in Clerk's Office) (afb,) (Entered: 02/06/2006)
02/06/2006	188	TRANSCRIPT of Markman Hearing held on 02/02/06 before Judge Farnan, Jr.; Court Reporter: Heather Triozzi from Hawkins ct. rptr.; (Transcript on file in Clerk's Office) (afb,) (Entered: 02/06/2006)
02/07/2006	189	MEMORANDUM ORDER that Defts.' 177 Motion to Compel is GRANTED. Parties shall meet and confer on dates for continued depositions of Leif Lund and Balu Balakrishnan. Signed by Judge Joseph J. Farnan, Jr. on 02/07/06. (afb,) (Entered: 02/07/2006)
02/10/2006	190	NOTICE to Take Deposition of Michael Shields on February 16, 2006 and Subpoena Pursuant to Federal Rule of Civil Procedure 45 by Fairchild Semiconductor International, Inc., Fairchild Semiconductor Corporation.(Maguire, Lauren) (Entered: 02/10/2006)
02/15/2006	191	REDACTED VERSION of 185 Declaration *of William J. Marsden, Jr. in Support of Plaintiff's Answer to Defendants' Motion to Compel the Continued Depositions of Leif Lund and Balu Balakrishnan* by Power Integrations, Inc.. (Marsden, William) (Entered: 02/15/2006)
02/17/2006	192	STIPULATION to amend dates in the Amended Scheduling Order re 128 Scheduling Order,, by Power Integrations, Inc., Fairchild Semiconductor International, Inc., Fairchild Semiconductor Corporation. (Maguire, Lauren) (Entered: 02/17/2006)
02/21/2006	193	NOTICE of Deposition and Subpoena of Deepak Sitaraman Pursuant to Federal Rule of Civil Procedure 45, deposition to take place on March 9, 2006 by Fairchild Semiconductor International, Inc., Fairchild Semiconductor Corporation (Maguire, Lauren) (Entered: 02/21/2006)
02/21/2006	194	NOTICE of Deposition and Subpoena of Shawn Slayton Pursuant to Federal Rule of Civil Procedure 45, deposition to take place on March 9, 2006 by Fairchild Semiconductor International, Inc., Fairchild Semiconductor Corporation (Maguire, Lauren) (Entered: 02/21/2006)
02/21/2006	195	NOTICE OF SERVICE of Notice of Subpoena of SG Cowan & Co. Pursuant to Federal Rule of Civil Procedure 45 by Fairchild Semiconductor International, Inc., Fairchild Semiconductor Corporation.(Maguire, Lauren) (Entered: 02/21/2006)

02/22/2006	196	NOTICE OF SERVICE of Defendants Fairchild Semiconductor International, Inc. and Fairchild Semiconductor Corporation's Supplemental Identification of Fact Witnesses by Fairchild Semiconductor International, Inc., Fairchild Semiconductor Corporation.(Maguire, Lauren) (Entered: 02/22/2006)
02/23/2006	197	First STIPULATION Permitting Defendants to File an Amended Answer by Power Integrations, Inc., Fairchild Semiconductor International, Inc., Fairchild Semiconductor Corporation. (Attachments: # 1 Exhibit A to Stipulation)(Maguire, Lauren) (Entered: 02/23/2006)
02/23/2006	198	ANSWER to Amended Complaint, COUNTERCLAIM(First Amended Answer and Counterclaim) against Power Integrations, Inc.(a Delaware corporation) by Fairchild Semiconductor International, Inc., Fairchild Semiconductor Corporation. (Attachments: # 1 Exhibit A# 2 Exhibit B# 3 Exhibit C# 4 Exhibit D# 5 Exhibit E# 6 Exhibit F# 7 Exhibit G# 8 Exhibit H# 9 Exhibit I# 10 Exhibit J, (11) Exhibit K)(Maguire, Lauren) Additional attachment(s) added on 2/24/2006 (afb,). Modified on 2/24/2006 (afb,). (Entered: 02/23/2006)
02/24/2006		CORRECTING ENTRY: Clerk added Exhibit K pdf to D.I. #198. (afb,) (Entered: 02/24/2006)
02/28/2006		SO ORDERED, re 197 Stipulation Permitting Defts. To File An Amended Answer filed by Power Integrations, Inc., Fairchild Semiconductor International, Inc., Fairchild Semiconductor Corporation . Signed by Judge Joseph J. Farnan, Jr. on 02/28/06. (afb,) (Entered: 02/28/2006)
03/07/2006	199	SO ORDERED, re 192 Stipulated Amendment To Scheduling Orderthat (1) rebuttal reports dd. 03/07/06; (2) depositions ddl. 03/31/06; (3) Summary Jgm. ddl. 03/17/06; (4) Responses to Summary Jgm. motions ddl. 04/07/06; (5) Replies to Summary Jgm. motions ddl. 04/19/06 filed by Power Integrations, Inc., Fairchild Semiconductor International, Inc., Fairchild Semiconductor Corporation . Signed by Judge Joseph J. Farnan, Jr. on 03/07/06. (afb,) (Entered: 03/08/2006)
03/07/2006		Set/Reset Scheduling Order Deadlines: Dispositive Motions due by 3/17/2006 per D.I. 192. (afb,) (Entered: 03/13/2006)
03/14/2006	200	NOTICE to Take Deposition of Michael Keeley on March 30, 2006 by Power Integrations, Inc..(Hayes, Sean) (Entered: 03/14/2006)
03/15/2006	201	ANSWER to Counterclaim *(First Amended)* by Power Integrations, Inc..(Hayes, Sean) (Entered: 03/15/2006)
03/17/2006	202	MOTION for Partial Summary Judgment *of Limitation on Damages Under 35 U.S.C. Section 287 (Failure to Mark)* - filed by Fairchild

		Semiconductor International, Inc., Fairchild Semiconductor Corporation. (Day, John) (Entered: 03/17/2006)
03/17/2006	203	SEALED OPENING BRIEF in Support re 202 MOTION for Partial Summary Judgment *of Limitation on Damages Under 35 U.S.C. Section 287 (Failure to Mark)* filed by Fairchild Semiconductor International, Inc., Fairchild Semiconductor Corporation.Answering Brief/Response due date per Local Rules is 3/31/2006. (Day, John) (Entered: 03/17/2006)
03/17/2006	204	MOTION for Summary Judgment *of Non-Infringement of Claims 17-19 of U.S. Patent No. 6,249,876* - filed by Fairchild Semiconductor International, Inc., Fairchild Semiconductor Corporation. (Day, John) (Entered: 03/17/2006)
03/17/2006	205	SEALED OPENING BRIEF in Support re 204 MOTION for Summary Judgment *of Non-Infringement of Claims 17-19 of U.S. Patent No. 6,249,876* filed by Fairchild Semiconductor International, Inc., Fairchild Semiconductor Corporation.Answering Brief/Response due date per Local Rules is 3/31/2006. (Day, John) (Entered: 03/17/2006)
03/17/2006	206	DECLARATION re 204 MOTION for Summary Judgment *of Non-Infringement of Claims 17-19 of U.S. Patent No. 6,249,876 of Paul Horowitz* by Fairchild Semiconductor International, Inc., Fairchild Semiconductor Corporation. (Day, John) (Entered: 03/17/2006)
03/17/2006	207	MOTION for Summary Judgment *of Invalidity of Claim 1 of the 876 Patent* - filed by Fairchild Semiconductor International, Inc., Fairchild Semiconductor Corporation. (Day, John) (Entered: 03/17/2006)
03/17/2006	208	SEALED OPENING BRIEF in Support re 207 MOTION for Summary Judgment *of Invalidity of Claim 1 of the 876 Patent* filed by Fairchild Semiconductor International, Inc., Fairchild Semiconductor Corporation.Answering Brief/Response due date per Local Rules is 3/31/2006. (Day, John) (Entered: 03/17/2006)
03/17/2006	209	DECLARATION re 207 MOTION for Summary Judgment *of Invalidity of Claim 1 of the 876 Patent of Dr. Paul Horowitz* by Fairchild Semiconductor International, Inc., Fairchild Semiconductor Corporation. (Day, John) (Entered: 03/17/2006)
03/17/2006	210	MOTION for Summary Judgment *DEFENDANTS' MOTION FOR SUMMARY JUDGMENT OF NON-INFRINGEMENT OF U.S. PATENT NO. 4,811,075* - filed by Fairchild Semiconductor International, Inc., Fairchild Semiconductor Corporation, Fairchild Semiconductor International, Inc., Fairchild Semiconductor Corporation, Fairchild Semiconductor International, Inc.(a Delaware corporation), Fairchild Semiconductor Corporation(a Delaware

		corporation), Fairchild Semiconductor International, Inc.(a Delaware corporation), Fairchild Semiconductor Corporation(a Delaware corporation). (Day, John) (Entered: 03/17/2006)
03/17/2006	211	(SEALED) OPENING BRIEF in Support re 210 MOTION for Summary Judgment DEFENDANTS' MOTION FOR SUMMARY JUDGMENT OF NON-INFRINGEMENT OF U.S. PATENT NO. 4,811,075 filed by Fairchild Semiconductor International, Inc., Fairchild Semiconductor Corporation, Fairchild Semiconductor International, Inc., Fairchild Semiconductor Corporation, Fairchild Semiconductor International, Inc.(a Delaware corporation), Fairchild Semiconductor Corporation(a Delaware corporation), Fairchild Semiconductor International, Inc.(a Delaware corporation), Fairchild Semiconductor Corporation(a Delaware corporation).Answering Brief/Response due date per Local Rules is 3/31/2006. (Day, John) Modified on 3/20/2006 (afb,). (Entered: 03/17/2006)
03/17/2006	212	(SEALED) DECLARATION re 210 MOTION for Summary Judgment DEFENDANTS' MOTION FOR SUMMARY JUDGMENT OF NON-INFRINGEMENT OF U.S. PATENT NO. 4,811,075 Declaration of Dr. Peter Gwozdz by Fairchild Semiconductor International, Inc., Fairchild Semiconductor Corporation, Fairchild Semiconductor International, Inc., Fairchild Semiconductor Corporation, Fairchild Semiconductor International, Inc.(a Delaware corporation), Fairchild Semiconductor Corporation(a Delaware corporation), Fairchild Semiconductor International, Inc.(a Delaware corporation), Fairchild Semiconductor Corporation(a Delaware corporation). (Day, John) Modified on 3/20/2006 (afb,). (Entered: 03/17/2006)
03/17/2006	213	MOTION for Summary Judgment *of Unenforceability and Invalidity of U.S. Patent Nos. 6,107,851 and 6,229,366* - filed by Fairchild Semiconductor International, Inc., Fairchild Semiconductor Corporation, Fairchild Semiconductor International, Inc., Fairchild Semiconductor Corporation, Fairchild Semiconductor International, Inc.(a Delaware corporation), Fairchild Semiconductor Corporation(a Delaware corporation), Fairchild Semiconductor International, Inc.(a Delaware corporation), Fairchild Semiconductor Corporation(a Delaware corporation). (Day, John) (Entered: 03/17/2006)
03/17/2006	214	SEALED OPENING BRIEF in Support re 213 MOTION for Summary Judgment *of Unenforceability and Invalidity of U.S. Patent Nos. 6,107,851 and 6,229,366* filed by Fairchild Semiconductor International, Inc., Fairchild Semiconductor Corporation, Fairchild Semiconductor International, Inc., Fairchild Semiconductor Corporation, Fairchild Semiconductor International, Inc.(a Delaware corporation), Fairchild Semiconductor Corporation(a Delaware corporation), Fairchild Semiconductor International, Inc.(a Delaware

		corporation), Fairchild Semiconductor Corporation(a Delaware corporation).Answering Brief/Response due date per Local Rules is 3/31/2006. (Day, John) (Entered: 03/17/2006)
03/17/2006	215	MOTION for Summary Judgment *of Invalidity of Claims 1 and 5 of U.S. Patent No. 4,811,075* - filed by Fairchild Semiconductor International, Inc., Fairchild Semiconductor Corporation. (Day, John) (Entered: 03/17/2006)
03/17/2006	216	SEALED OPENING BRIEF in Support re 215 MOTION for Summary Judgment *of Invalidity of Claims 1 and 5 of U.S. Patent No. 4,811,075* filed by Fairchild Semiconductor International, Inc., Fairchild Semiconductor Corporation.Answering Brief/Response due date per Local Rules is 3/31/2006. (Day, John) (Entered: 03/17/2006)
03/17/2006	217	SEALED DECLARATION re 215 MOTION for Summary Judgment *of Invalidity of Claims 1 and 5 of U.S. Patent No. 4,811,075 of Dr. Peter Gwozdz* by Fairchild Semiconductor International, Inc., Fairchild Semiconductor Corporation. (Day, John) (Entered: 03/17/2006)
03/17/2006	218	MOTION for Partial Summary Judgment *of Non-Infringement (Foreign Sales)* - filed by Fairchild Semiconductor International, Inc., Fairchild Semiconductor Corporation. (Day, John) (Entered: 03/17/2006)
03/17/2006	219	SEALED OPENING BRIEF in Support re 218 MOTION for Partial Summary Judgment *of Non-Infringement (Foreign Sales)* filed by Fairchild Semiconductor International, Inc., Fairchild Semiconductor Corporation.Answering Brief/Response due date per Local Rules is 3/31/2006. (Day, John) (Entered: 03/17/2006)
03/23/2006	220	REDACTED VERSION of 216 Opening Brief in Support, *of Defendants' Motion for Summary Judgment of Invalidity of Claims 1 and 5 of U.S. Patent No. 4, 811, 075* by Fairchild Semiconductor International, Inc., Fairchild Semiconductor Corporation. (Attachments: # 1 Exhibit A through N)(Maguire, Lauren) (Entered: 03/23/2006)
03/23/2006	221	REDACTED VERSION of 217 Declaration *of Dr. Peter Gwozdz in Support of Defendants' Motion for Summary Judgment of Invalidity of Claims 1 and 5 of U.S. Patent No. 4,,811,075* by Fairchild Semiconductor International, Inc., Fairchild Semiconductor Corporation. (Maguire, Lauren) (Entered: 03/23/2006)
03/23/2006	222	REDACTED VERSION of 211 Opening Brief in Support,, *of Defendants' Motion for Summary Judgment of Non-Infringement of U.S. Patent No. 4,811,075* by Fairchild Semiconductor International, Inc., Fairchild Semiconductor Corporation. (Attachments: # 1 Exhibit

		A# 2 Exhibit B through C# 3 Exhibit D# 4 Exhibit E (Part I)# 5 Exhibit E (Part II)# 6 Exhibit E (Part III)# 7 Exhibit F through G# 8 Exhibit H# 9 Exhibit I through L)(Maguire, Lauren) (Entered: 03/23/2006)
03/23/2006	223	REDACTED VERSION of 212 Declaration,, *of Dr. Peter Gwozdz in Support of Defendants' Motion for Summary Judgment of Non-Infringement of U.S. Patent No. 4,811,075* by Fairchild Semiconductor International, Inc., Fairchild Semiconductor Corporation. (Maguire, Lauren) (Entered: 03/23/2006)
03/23/2006	224	REDACTED VERSION of 205 Opening Brief in Support, *of Defendants' Motion for Summary Judgment of Non-Infringement of Claims 17-19 of U.S. Patent No. 6,249,876* by Fairchild Semiconductor International, Inc., Fairchild Semiconductor Corporation. (Attachments: # 1 Exhibit A through B# 2 Exhibit C)(Maguire, Lauren) (Entered: 03/23/2006)
03/23/2006	225	MOTION for Pro Hac Vice Appearance of Attorney Desa Burton - filed by Power Integrations, Inc.. (Hayes, Sean) (Entered: 03/23/2006)
03/24/2006	226	REDACTED VERSION of 214 Opening Brief in Support,, *of Defendants' Motion for Summary Judgment of Unenforceability and Invalidity of U.S. Patent Nos. 6,107,851 and 6,229,366* by Fairchild Semiconductor International, Inc., Fairchild Semiconductor Corporation. (Attachments: # 1 Appendix 1 through 3# 2 Exhibit A# 3 Exhibit B# 4 Exhibit C (Part 1)# 5 Exhibit C (Part II)# 6 Exhibit C (Part III)# 7 Exhibit D# 8 Exhibit E# 9 Exhibit F through G# 10 Exhibit H# 11 Exhibit I# 12 Exhibit J# 13 Exhibit K# 14 Exhibit L through M)(Maguire, Lauren) (Entered: 03/24/2006)
03/24/2006	227	REDACTED VERSION of 219 Opening Brief in Support, *of Defendants' Motion for Partial Summary Judgment of Non-Infringement (Foreign Sales)* by Fairchild Semiconductor International, Inc., Fairchild Semiconductor Corporation. (Attachments: # 1 Exhibit A-H# 2 Exhibit I# 3 Exhibit J-N# 4 Exhibit O# 5 Exhibit P-Q# 6 Exhibit R# 7 Exhibit S# 8 Exhibit T# 9 Exhibit U# 10 Exhibit V# 11 Exhibit W# 12 Exhibit X# 13 Exhibit Y)(Maguire, Lauren) (Entered: 03/24/2006)
03/24/2006	228	REDACTED VERSION of 208 Opening Brief in Support, *of Defendants' Motion for Summary Judgment of Invalidity of Claim 1 of the '876 Patent* by Fairchild Semiconductor International, Inc., Fairchild Semiconductor Corporation. (Attachments: # 1 Exhibit A# 2 Exhibit B# 3 Exhibit C# 4 Exhibit D# 5 Exhibit E# 6 Exhibit F# 7 Exhibit G)(Maguire, Lauren) (Entered: 03/24/2006)
03/24/2006	229	REDACTED VERSION of 203 Opening Brief in Support, *of Defendants' Motion for Partial Summary Judgment of Limitation on*

		Damages Under 35 U.S.C. Section 287 (Failure to Mark) by Fairchild Semiconductor International, Inc., Fairchild Semiconductor Corporation. (Attachments: # 1 Exhibits A through C# 2 Exhibit D# 3 Exhibits E through K)(Maguire, Lauren) (Entered: 03/24/2006)
03/27/2006		SO ORDERED, re 225 MOTION for Pro Hac Vice Appearance of Attorney Desa Burton filed by Power Integrations, Inc.; Signed by Judge Joseph J. Farnan, Jr. on 03/27/06. (afb,) (Entered: 03/28/2006)
03/30/2006	230	NOTICE OF SERVICE of Expert Report of Richard Troxel on Damages served 1/31/06 by Power Integrations, Inc..(Hayes, Sean) (Entered: 03/30/2006)
03/31/2006	231	MEMORANDUM OPINION re: D.I. 232. Signed by Judge Joseph J. Farnan, Jr. on 03/31/06. (afb,) (Entered: 03/31/2006)
03/31/2006	232	ORDER regarding claim construction. (SEE ORDER FOR DETAILS) signed by Judge Joseph J. Farnan, Jr. on 03/31/06. (afb,) (Entered: 03/31/2006)
04/07/2006	233	SEALED ANSWERING BRIEF in Opposition re 218 MOTION for Partial Summary Judgment *of Non-Infringement (Foreign Sales)*, 210 MOTION for Summary Judgment *DEFENDANTS' MOTION FOR SUMMARY JUDGMENT OF NON-INFRINGEMENT OF U.S. PATENT NO. 4,811,075*, 215 MOTION for Summary Judgment *of Invalidity of Claims 1 and 5 of U.S. Patent No. 4,811,075*, 213 MOTION for Summary Judgment *of Unenforceability and Invalidity of U.S. Patent Nos. 6,107,851 and 6,229,366*, 204 MOTION for Summary Judgment *of Non-Infringement of Claims 17-19 of U.S. Patent No. 6,249,876*, 207 MOTION for Summary Judgment *of Invalidity of Claim 1 of the 876 Patent* filed by Power Integrations, Inc..Reply Brief due date per Local Rules is 4/14/2006. (Hayes, Sean) (Entered: 04/07/2006)
04/07/2006	234	SEALED DECLARATION of Sean P. Hayes ISO PI Joint Claim Counterstatement in Response to Six of Fairchild's Seven Motions for Summary Judgment (D.I. 218, 210, 215, 213, 204, 207) by Power Integrations, Inc. (Hayes, Sean) Modified on 4/10/2006 (afb,). (Entered: 04/07/2006)
04/07/2006	235	ANSWERING BRIEF in Opposition re 202 MOTION for Partial Summary Judgment *of Limitation on Damages Under 35 U.S.C. Section 287 (Failure to Mark)* filed by Power Integrations, Inc..Reply Brief due date per Local Rules is 4/14/2006. (Hayes, Sean) (Entered: 04/07/2006)
04/10/2006		Remark : Clerk linked the Declaration (D.I. 234) to Motions (D.I. 218, 210, 215, 213, 204, 207). (afb,) (Entered: 04/10/2006)

04/10/2006	236	NOTICE OF SERVICE of Amended Notice of Subpoena of Richard B. Troxel Pursuant to Federal Rule of Civil Procedure 45 by Fairchild Semiconductor International, Inc., Fairchild Semiconductor Corporation.(Day, John) (Entered: 04/10/2006)
04/12/2006	237	MOTION /Defendants' Expedited Motion to Postpone Pretrial Conference - filed by Fairchild Semiconductor International, Inc., Fairchild Semiconductor Corporation. (Attachments: # 1 Text of Proposed Order)(Day, John) (Entered: 04/12/2006)
04/12/2006	238	MOTION to Expedite *(Defendants' Motion to Shorten Time for Briefing on Expedited Motion to Postpone Pretrial Conference)* - filed by Fairchild Semiconductor International, Inc., Fairchild Semiconductor Corporation. (Attachments: # 1 Text of Proposed Order)(Day, John) (Entered: 04/12/2006)
04/12/2006	239	DECLARATION re 237 MOTION /Defendants' Expedited Motion to Postpone Pretrial Conference, 238 MOTION to Expedite *(Defendants' Motion to Shorten Time for Briefing on Expedited Motion to Postpone Pretrial Conference)* by Fairchild Semiconductor International, Inc., Fairchild Semiconductor Corporation. (Attachments: # 1 Exhibit A through E)(Day, John) (Entered: 04/12/2006)
04/13/2006	240	ANSWERING BRIEF in Opposition re 238 MOTION to Shorten Time for Briefing on Expedited Motion to Postpone Pretrial Conference. Reply Brief due date per Local Rules is 4/20/2006. (Marsden, William) Modified on 4/13/2006 (afb,). (Entered: 04/13/2006)
04/13/2006		CORRECTING ENTRY: Clerk removed the linkage of Answer Brief (D.I. 240) to Motion (D.I. 237) and correctly linked it to Motion (D.I. 238). (afb,) (Entered: 04/13/2006)
04/13/2006	241	Letter to The Honorable Joseph J. Farnan, Jr. from John G. Day regarding defendants Fairchild Semiconductor International, Inc. and Fairchild Semiconductor Corp. waiving their right to file a reply brief in support of D.I. 238 - re 238 MOTION to Expedite *(Defendants' Motion to Shorten Time for Briefing on Expedited Motion to Postpone Pretrial Conference)*. (Day, John) (Entered: 04/13/2006)
04/14/2006	242	REDACTED VERSION of 233 Answering Brief in Opposition,,, *Power Integrations, Inc.'s Joint Counterstatement in Response to Six of Fairchild' Seven Motions for Summary Judgment* by Power Integrations, Inc.. (Hayes, Sean) (Entered: 04/14/2006)
04/14/2006	243	REDACTED VERSION of 234 Declaration, *Declaration of Sean P. Hayes in Support of Power Integrations' Joint Counterstatement in Response to Six of Fairchild's Seven Motions for Summary Judgment* by Power Integrations, Inc.. (Attachments: # 1 Exhibit A - T# 2 Exhibit

		U - W# 3 Exhibit)(Hayes, Sean) (Entered: 04/14/2006)
04/19/2006	244	SEALED REPLY BRIEF re 218 MOTION for Partial Summary Judgment *of Non-Infringement (Foreign Sales)*, 210 MOTION for Summary Judgment *DEFENDANTS' MOTION FOR SUMMARY JUDGMENT OF NON-INFRINGEMENT OF U.S. PATENT NO. 4,811,075*, 215 MOTION for Summary Judgment *of Invalidity of Claims 1 and 5 of U.S. Patent No. 4,811,075*, 213 MOTION for Summary Judgment *of Unenforceability and Invalidity of U.S. Patent Nos. 6,107,851 and 6,229,366*, 204 MOTION for Summary Judgment *of Non-Infringement of Claims 17-19 of U.S. Patent No. 6,249,876*, 202 MOTION for Partial Summary Judgment *of Limitation on Damages Under 35 U.S.C. Section 287 (Failure to Mark)*, 207 MOTION for Summary Judgment *of Invalidity of Claim 1 of the 876 Patent* filed by Fairchild Semiconductor International, Inc., Fairchild Semiconductor Corporation. (Day, John) (Entered: 04/20/2006)
04/20/2006	245	(SEALED) REPLY BRIEF re 202 MOTION for Partial Summary Judgment of Limitation on Damages Under 35 U.S.C. Section 287 (Failure to Mark) filed by Fairchild Semiconductor International, Inc., Fairchild Semiconductor Corporation. (Day, John) Modified on 4/20/2006 (afb,). (Entered: 04/20/2006)
04/20/2006		CORRECTING ENTRY: Clerk updated the docket text of D.I. 245 to reflect the Reply Brief is SEALED. (afb,) (Entered: 04/20/2006)
04/20/2006	246	ANSWERING BRIEF in Opposition re 237 MOTION /Defendants' Expedited Motion to Postpone Pretrial Conference filed by Power Integrations, Inc..Reply Brief due date per Local Rules is 4/27/2006. (Attachments: # 1 Exhibit A & B)(Marsden, William) (Entered: 04/20/2006)
04/20/2006	247	NOTICE to Take Deposition of H.K. Kim on April 29, 2006 by Power Integrations, Inc..(Marsden, William) (Entered: 04/20/2006)
04/24/2006	248	REPLY BRIEF re 237 MOTION /Defendants' Expedited Motion to Postpone Pretrial Conference filed by Fairchild Semiconductor International, Inc., Fairchild Semiconductor Corporation. (Attachments: # 1 Exhibit A)(Day, John) (Entered: 04/24/2006)
04/26/2006	249	REDACTED VERSION of 218 MOTION for Partial Summary Judgment *of Non-Infringement (Foreign Sales)*, 210 MOTION for Summary Judgment *DEFENDANTS' MOTION FOR SUMMARY JUDGMENT OF NON-INFRINGEMENT OF U.S. PATENT NO. 4,811,075*, 215 MOTION for Summary Judgment *of Invalidity of Claims 1 and 5 of U.S. Patent No. 4,811,075*, 213 MOTION for Summary Judgment *of Unenforceability and Invalidity of U.S. Patent Nos. 6,107,851 and 6,229,366*, 204 MOTION for Summary Judgment

		of Non-Infringement of Claims 17-19 of U.S. Patent No. 6,249,876, 207 MOTION for Summary Judgment *of Invalidity of Claim 1 of the 876 Patent Consolidated Reply in Support of Defendants' Motions for Summary Judgment* by Fairchild Semiconductor International, Inc., Fairchild Semiconductor Corporation. (Attachments: # 1 Part 2 of brief)(Day, John) (Entered: 04/26/2006)
04/26/2006	250	REDACTED VERSION of 202 MOTION for Partial Summary Judgment *of Limitation on Damages Under 35 U.S.C. Section 287 (Failure to Mark) Reply Brief in Support of Defendants' Motion for Summary Judgment of Limitation on Damages* by Fairchild Semiconductor International, Inc., Fairchild Semiconductor Corporation. (Day, John) (Entered: 04/26/2006)
05/02/2006	251	ORDER that the 237 Motion to Postpone Pretrial Conference is GRANTED; The May 11, 2006 Pretrial Conference is CANCELLED; The Pretrial Conference will be held on 05/31/06 at 12:30 p.m. in Courtroom 4B; The 238 Motion to Shorten Time for Briefing on Defendant's Expedited Motion to Postpone Pretrial Conference is DENIED as moot. (SEE ORDER FOR DETAILS). Signed by Judge Joseph J. Farnan, Jr. on 05/02/06. (afb,) (Entered: 05/03/2006)
05/02/2006		Set/Reset Hearings: Pretrial Conference reset for 5/31/2006 at 12:30 PM in Courtroom 4B before Honorable Joseph J. Farnan, Jr. per D.I. 251. (afb,) (Entered: 05/03/2006)
05/10/2006	252	NOTICE OF SERVICE of Supplemental Expert Report of Richard Troxel on Damages by Power Integrations, Inc..(Hayes, Sean) (Entered: 05/10/2006)
05/10/2006	253	MOTION for Pro Hac Vice Appearance of Attorney David J. Miclean - filed by Power Integrations, Inc.. (Hayes, Sean) (Entered: 05/10/2006)
05/11/2006	254	NOTICE OF SERVICE of Subpoena on Intersil Corporation by Power Integrations, Inc..(Hayes, Sean) (Entered: 05/11/2006)
05/11/2006		SO ORDERED, re 253 MOTION for Pro Hac Vice Appearance of Attorney David J. Miclean filed by Power Integrations, Inc.; Signed by Judge Joseph J. Farnan, Jr. on 05/11/06. (afb,) (Entered: 05/11/2006)
05/25/2006	255	Proposed Jury Instructions by Power Integrations, Inc.. (Marsden, William) (Entered: 05/25/2006)
05/25/2006	256	Proposed Voir Dire by Power Integrations, Inc.. (Marsden, William) (Entered: 05/25/2006)
05/25/2006	257	VERDICT SHEET by Power Integrations, Inc. *Proposed Special Verdict and Interrogatories to the Jury*. (Marsden, William) (Entered: 05/25/2006)

05/25/2006	258	Proposed Pretrial Order by Power Integrations, Inc., Fairchild Semiconductor Corporation. (Attachments: # 1 Exhibit 1 - 5# 2 Exhibit 6 - 8# 3 Exhibit 9# 4 Exhibit 10-14# 5 Exhibit 15-17)(Marsden, William) (Entered: 05/25/2006)
05/25/2006	259	Proposed Jury Instructions by Fairchild Semiconductor International, Inc., Fairchild Semiconductor Corporation. (Attachments: # 1 Part 2# 2 Part 3)(Day, John) (Entered: 05/25/2006)
05/25/2006	260	Proposed Voir Dire by Fairchild Semiconductor International, Inc., Fairchild Semiconductor Corporation. (Day, John) (Entered: 05/25/2006)
05/25/2006	261	VERDICT SHEET by Fairchild Semiconductor International, Inc., Fairchild Semiconductor Corporation. (Day, John) (Entered: 05/25/2006)
05/26/2006	262	MOTION to Quash *Subpoena and for Protective Order* - filed by Intersil Corporation. (Day, John) (Entered: 05/26/2006)
05/26/2006	263	OPENING BRIEF in Support re 262 MOTION to Quash *Subpoena and for Protective Order* filed by Intersil Corporation.Answering Brief/Response due date per Local Rules is 6/12/2006. (Attachments: # 1 Exhibits A-B# 2 Exhibits C-D# 3 Exhibit E# 4 Exhibits F-H)(Day, John) (Entered: 05/26/2006)
05/31/2006		Minute Entry for proceedings held before Judge Joseph J. Farnan, Jr. : Pretrial Conference held on 5/31/2006. DECISION: Order to be issued. (Court Reporter Stacey from Hawkins ct. rptr.) (afb,) (Entered: 05/31/2006)
05/31/2006	264	ORDER: All damages discovery and expert reports due by 8/18/2006. Motions in Limine due by 9/11/2006. Second Pretrial Conference set for 9/14/2006 at 01:30 PM in Courtroom 4B before Honorable Joseph J. Farnan, Jr.; Revised Proposed Pretrial Order due by 9/1/2006. Jury Trial on the issues of infringement and damages set for 10/02/06 at 9:30 a.m. and Jury Trial on the issues of validity set for 12/4/2006 at 09:30 AM in Courtroom 4B before Honorable Joseph J. Farnan, Jr.; The parties shall agree upon a briefing schedule to address by letter briefs two motions in limine identified in the First Pretrial Order under Tab 16, Number 2 and Tab 17, Number 1. (SEE ORDER FOR DETAILS). Signed by Judge Joseph J. Farnan, Jr. on 05/31/06. (afb,) Modified on 6/19/2006 (afb,). (Entered: 06/01/2006)
05/31/2006		Set/Reset Hearings: Jury Trial set for 10/2/2006 at 09:30 AM in Courtroom 4B before Honorable Joseph J. Farnan, Jr. per D.I. 264. (afb,) (Entered: 06/01/2006)
06/02/2006	265	MEMORANDUM ORDER that Deft.'s 202 Motion for Partial

		Summary Judgment of Limitation On Damages Under 35 U.S.C. 287 (Failure To Mark) is GRANTED . Signed by Judge Joseph J. Farnan, Jr. on 06/02/06. (afb,) (Entered: 06/02/2006)
06/02/2006	266	MEMORANDUM ORDER that Defts.' 204 Motion for Summary Judgment is DENIED; Defts.' 207 Motion for Summary Judgment is DENIED; Defts.' 210 Motion for Summary Judgment is DENIED; Defts.' 213 Motion for Summary Judgment is DENIED; Defts.' 215 Motion for Summary Judgment is DENIED; Defts.' 218 Motion for Partial Summary Judgment is DENIED. (SEE ORDER FOR DETAILS). Signed by Judge Joseph J. Farnan, Jr. on 06/02/06. (afb,) (Entered: 06/02/2006)
06/07/2006	267	NOTICE OF SERVICE of H.K. Kim's Response and Objections to Subpoena to H.K. Kim by Fairchild Semiconductor International, Inc., Fairchild Semiconductor Corporation.(Day, John) (Entered: 06/07/2006)
06/07/2006	268	NOTICE OF SERVICE of Defendants' Third Supplemental Response to Interrogatory No. 8 by Fairchild Semiconductor International, Inc., Fairchild Semiconductor Corporation.(Day, John) (Entered: 06/07/2006)
06/12/2006	269	ANSWERING BRIEF in Opposition re 262 MOTION to Quash *Subpoena and for Protective Order* filed by Power Integrations, Inc..Reply Brief due date per Local Rules is 6/19/2006. (Hayes, Sean) (Entered: 06/12/2006)
06/12/2006	270	DECLARATION *to 269* by Power Integrations, Inc.. (Attachments: # 1 Exhibit A# 2 Exhibit B# 3 Exhibit C# 4 Exhibit D# 5 Exhibit E# 6 Exhibit F# 7 Exhibit G-I# 8 Exhibit J# 9 Exhibit K# 10 Exhibit L# 11 Exhibit M)(Hayes, Sean) (Entered: 06/12/2006)
06/14/2006	271	Letter to The Honorable Joseph J. Farnan, Jr. from Lauren E. Maguire regarding Fairchild's first motion in limine (FILED UNDER SEAL). (Maguire, Lauren) (Entered: 06/14/2006)
06/14/2006	272	MOTION in Limine - filed by Power Integrations, Inc.. (Marsden, William) (Entered: 06/14/2006)
06/14/2006	273	SEALED DECLARATION re 272 MOTION in Limine *Declaration of Tara D. Elliott in Support of Power Integration's Motion in Limine re Fairchild Expert Testimony Beyond Expert Reports* by Power Integrations, Inc.. (Marsden, William) (Entered: 06/14/2006)
06/15/2006	274	SEALED MOTION for Reconsideration *Re Bifurcation* - filed by Fairchild Semiconductor International, Inc., Fairchild Semiconductor Corporation. (Maguire, Lauren) (Entered: 06/15/2006)

06/16/2006	275	Letter to Honorable Joseph J. Farnan, Jr. from Sean P. Hayes regarding request for reconsideration of portion of the Court's 6/2/06 partial summary judgment order re "collection" and "calculation" of damages. (Hayes, Sean) (Entered: 06/16/2006)
06/21/2006	276	Letter to Honorable Joseph J. Farnan from Sean P. Hayes regarding opposition to Fairchild's Motion in Limine re Alleged Expert Testimony - re 271 Letter. (Attachments: # 1 Exhibit A-E)(Hayes, Sean) (Entered: 06/21/2006)
06/21/2006	277	MOTION for Pro Hac Vice Appearance of Attorney Jeffrey R. Bragalone and Joseph F. DePumpo - filed by Intersil Corporation. (Day, John) (Entered: 06/21/2006)
06/21/2006	278	MOTION for Pro Hac Vice Appearance of Attorney Brian H. VanderZanden - filed by Fairchild Semiconductor International, Inc., Fairchild Semiconductor Corporation. (Maguire, Lauren) (Entered: 06/21/2006)
06/21/2006	279	(SEALED)Letter to The Honorable Joseph J. Farnan, Jr. from Lauren E. Maguire regarding Fairchild's response to Power Integration's Motion in Limine. (Maguire, Lauren) Modified on 6/29/2006 (afb,). (Entered: 06/21/2006)
06/21/2006	280	STIPULATION TO EXTEND TIME for non-party witness Intersil Corporation's reply brief in support of its motion to quash subpoena and for protective order to Monday, June 26, 2006 - filed by Intersil Corporation. (Day, John) (Entered: 06/21/2006)
06/21/2006	281	REDACTED VERSION of 271 Letter *to The Honorable Joseph J. Farnan, Jr. from Lauren E. Maguire regarding Fairchild's First Motion in Limine* by Fairchild Semiconductor International, Inc., Fairchild Semiconductor Corporation. (Maguire, Lauren) (Entered: 06/21/2006)
06/21/2006	282	TRANSCRIPT of Pretrial Conference held on 05/31/06 before Judge Farnan, Jr.; Court Reporter: Stacey Vickers from Hawkins ct. rptr.; (Transcript on file in Clerk's Office) (afb,) Modified on 6/27/2006 (afb,). (Entered: 06/22/2006)
06/22/2006	283	REDACTED VERSION of 274 SEALED MOTION for Reconsideration *Re Bifurcation* by Fairchild Semiconductor International, Inc., Fairchild Semiconductor Corporation. (Maguire, Lauren) (Entered: 06/22/2006)
06/23/2006		SO ORDERED, re 280 STIPULATION TO EXTEND TIME for non-party witness Intersil Corporation's reply brief in support of its motion to quash subpoena and for protective order is extended to Monday, June 26, 2006. Signed by Judge Joseph J. Farnan, Jr. on 06/23/06. (afb,

		) (Entered: 06/26/2006)
06/23/2006		Set Briefing Schedule: Reply Brief due 6/26/2006 per D.I. 280. (afb,) (Entered: 06/26/2006)
06/23/2006		SO ORDERED, re 278 MOTION for Pro Hac Vice Appearance of Attorney Brian H. VanderZanden. Signed by Judge Joseph J. Farnan, Jr. on 06/23/06. (afb,) (Entered: 06/26/2006)
06/23/2006		SO ORDERED, re 277 MOTION for Pro Hac Vice Appearance of Attorney Jeffrey R. Bragalone and Joseph F. DePumpo. Signed by Judge Joseph J. Farnan, Jr. on 06/23/06. (afb,) (Entered: 06/26/2006)
06/26/2006	284	SEALED REPLY BRIEF re 262 MOTION to Quash Subpoena and for Protective Order filed by Intersil Corporation. (Day, John) Modified on 6/29/2006 (afb,). (Entered: 06/26/2006)
06/27/2006		CORRECTING ENTRY: Clerk updated the filing date of the Transcript (D.I. 282) from 05/31/06 to 06/21/06. (afb,) (Entered: 06/27/2006)
06/28/2006	285	REDACTED VERSION of 279 Letter *re: response to Limine* by Fairchild Semiconductor International, Inc., Fairchild Semiconductor Corporation. (Maguire, Lauren) (Entered: 06/28/2006)
06/29/2006		CORRECTING ENTRY: Clerk updated the docket entry (D.I. 284) to reflect that the Reply Brief was filed by Intersil Corporation. (afb,) (Entered: 06/29/2006)
06/29/2006		CORRECTING ENTRY: Clerk updated the docket text of Letter (D.I. 279) by marking it filed as "SEALED". (afb,) (Entered: 06/29/2006)
06/29/2006	286	STIPULATION TO EXTEND TIME Power Integrations' response to Fairchild Semiconductor's Motion for Reconsideration to July 5, 2006 - filed by Power Integrations, Inc.. (Hayes, Sean) (Entered: 06/29/2006)
07/03/2006	287	REDACTED VERSION of 284 Reply Brief *in Support of its Motion to Quash Subpoena and for a Protective Order* by Intersil Corporation. (Day, John) (Entered: 07/03/2006)
07/05/2006	288	ANSWERING BRIEF in Opposition re 274 SEALED MOTION for Reconsideration *Re Bifurcation* filed by Power Integrations, Inc..Reply Brief due date per Local Rules is 7/12/2006. (Hayes, Sean) Additional attachment(s) added on 7/7/2006 (afb,). (Entered: 07/05/2006)
07/05/2006	289	DECLARATION *of Sean P. Hayes* by Power Integrations, Inc.. (Attachments: # 1 Exhibit A-C)(Hayes, Sean) (Entered: 07/05/2006)
07/06/2006	290	SEALED ANSWERING BRIEF in Opposition *to Power Integrations' Motion for Reconsideration of the Court's June 2, 2006 Order (D.I.*

		275) filed by Fairchild Semiconductor International, Inc., Fairchild Semiconductor Corporation.Reply Brief due date per Local Rules is 7/13/2006. (Day, John) (Entered: 07/06/2006)
07/06/2006		SO ORDERED, re 286 STIPULATION TO EXTEND TIME Power Integrations' response to Fairchild Semiconductor's Motion for Reconsideration to July 5, 2006 ; and the due date for Fairchild's response to Power Integrations' motion for reconsideration (D.I. 275) is extended to 07/06/06. Signed by Judge Joseph J. Farnan, Jr. on 07/06/06. (afb,) (Entered: 07/06/2006)
07/06/2006		Set Briefing Schedule: Answering Brief due 7/5/2006 per D.I. 286. (afb,) (Entered: 07/06/2006)
07/07/2006		CORRECTING ENTRY: Clerk removed the unsigned version of the Answering Brief (D.I. 288) and replaced it with a signed version. (afb,) (Entered: 07/07/2006)
07/07/2006	291	SEALED MOTION to Compel *Power Integrations to Provide "Pared Down" Infringement Contentions for Trial* - filed by Fairchild Semiconductor International, Inc., Fairchild Semiconductor Corporation. (Day, John) (Entered: 07/07/2006)
07/10/2006	292	REDACTED VERSION of 291 SEALED MOTION to Compel *Power Integrations to Provide "Pared Down" Infringement Contentions for Trial* by Fairchild Semiconductor International, Inc., Fairchild Semiconductor Corporation. (Day, John) (Entered: 07/10/2006)
07/12/2006	293	NOTICE OF SERVICE of Notice of Subpoena of Francis Lum Pursuant to Federal Rule of Civil Procedure 45 by Fairchild Semiconductor International, Inc., Fairchild Semiconductor Corporation.(Day, John) (Entered: 07/12/2006)
07/12/2006	294	NOTICE OF SERVICE of Second 30(b)(6) Notice of Deposition to Fairchild by Power Integrations, Inc..(Horvath, John) (Entered: 07/12/2006)
07/13/2006	295	Letter to Hon. Joseph J. Farnan, Jr. from John F. Horvath regarding reply - re 290 Answering Brief in Opposition,. (Horvath, John) (Entered: 07/13/2006)
07/13/2006	296	REDACTED VERSION of 290 Answering Brief in Opposition, *to Power Integrations' Motion for Reconsideration of the Court's June 2, 2006 Order* by Fairchild Semiconductor International, Inc., Fairchild Semiconductor Corporation. (Day, John) (Entered: 07/13/2006)
07/14/2006	297	MOTION to Strike *Unauthorized Reply Brief* - filed by Fairchild Semiconductor International, Inc., Fairchild Semiconductor Corporation. (Attachments: # 1 Exhibit 1 and 2# 2 Exhibit 3 (Text of

		Proposed Order))(Day, John) (Entered: 07/14/2006)
07/14/2006	298	SEALED Letter to Honorable Joseph J. Farnan, Jr. from John F. Horvath regarding SEALED Answer - re 291 SEALED MOTION to Compel *Power Integrations to Provide "Pared Down" Infringement Contentions for Trial*. (Horvath, John) (Entered: 07/14/2006)
07/17/2006	299	REDACTED VERSION of 298 Letter *to Judge Farnan from John Horvath re Fairchild's Motion to Compel* by Power Integrations, Inc.. (Attachments: # 1 Exhibit Redacted Exhibit A & B# 2 Exhibit C-E)(Horvath, John) (Entered: 07/17/2006)
07/20/2006	300	Letter to The Honorable Joseph J. Farnan, Jr. from John F. Horvath regarding Fairchild's Mtn to Strike (D.I. 297) - re 297 MOTION to Strike *Unauthorized Reply Brief*. (Horvath, John) (Entered: 07/20/2006)
07/25/2006	301	Letter to The Honorable Joseph J. Farnan, Jr. from John G. Day regarding waiver of reply brief on motion to strike - re 297 MOTION to Strike *Unauthorized Reply Brief*. (Day, John) (Entered: 07/25/2006)
07/28/2006	302	NOTICE to Take Deposition of Michael C. Keeley on August 25, 2006 by Power Integrations, Inc..(Marsden, William) (Entered: 07/28/2006)
08/03/2006	303	MOTION to Compel *Damages Discovery and to Continue Damages Trial Date* - filed by Fairchild Semiconductor International, Inc., Fairchild Semiconductor Corporation. (Attachments: # 1 Exhibit)(Day, John) (Entered: 08/03/2006)
08/03/2006	304	PROPOSED ORDER Granting Defendants' Motion to Compel Damages Discovery and to Continue Damages Trial Date re 303 MOTION to Compel *Damages Discovery and to Continue Damages Trial Date* by Fairchild Semiconductor International, Inc., Fairchild Semiconductor Corporation. (Day, John) (Entered: 08/03/2006)
08/07/2006	305	NOTICE OF SERVICE of Notice of Deposition and Subpoena of Howard Earhart Pursuant to Federal Rule of Civil Procedure 45 by Fairchild Semiconductor International, Inc., Fairchild Semiconductor Corporation.(Lydon, Tiffany) (Entered: 08/07/2006)
08/07/2006	306	NOTICE OF SERVICE of Notice of Deposition and Subpoena of John Cobb Pursuant to Federal Rule of Civil Procedure 45 by Fairchild Semiconductor International, Inc., Fairchild Semiconductor Corporation.(Lydon, Tiffany) (Entered: 08/07/2006)
08/08/2006	307	Letter to Honorable Joseph J. Farnan from William J. Marsden, Jr. regarding Fairchild waiver of privilege in reliance on opinions of counsel (FILED UNDER SEAL). (Marsden, William) (Entered: 08/08/2006)

08/10/2006	308	Letter to The Honorable Joseph J. Farnan, Jr. from William J. Marsden, Jr. regarding Power Integrations' Opposition to Fairchild's Motion To Compel Damages Discovery And To Continue Damages Trial Date - re 303 MOTION to Compel *Damages Discovery and to Continue Damages Trial Date*. (Attachments: # 1 Exhibit A to Letter to The Honorable Joseph J. Farnan, Jr.)(Marsden, William) (Entered: 08/10/2006)
08/11/2006	309	SEALED MOTION for Protective Order *Regarding Deposition of Michael C. Keeley, Rebuttal Expert Report on Damages, and Continuation of Damages Trial* - filed by Fairchild Semiconductor International, Inc., Fairchild Semiconductor Corporation. (Lydon, Tiffany) (Entered: 08/11/2006)
08/11/2006	310	MOTION Shorten Time for Briefing re 309 SEALED MOTION for Protective Order *Regarding Deposition of Michael C. Keeley, Rebuttal Expert Report on Damages, and Continuation of Damages Trial* - filed by Fairchild Semiconductor International, Inc., Fairchild Semiconductor Corporation. (Lydon, Tiffany) Additional attachment(s) added on 8/21/2006 (dab,). Modified on 8/21/2006 (dab,). (Entered: 08/11/2006)
08/11/2006	311	DECLARATION re 309 SEALED MOTION for Protective Order *Regarding Deposition of Michael C. Keeley, Rebuttal Expert Report on Damages, and Continuation of Damages Trial (Declaration of Michael Keeley)* by Fairchild Semiconductor International, Inc., Fairchild Semiconductor Corporation. (Lydon, Tiffany) Additional attachment(s) added on 8/21/2006 (dab,). Modified on 8/21/2006 (dab,). (Entered: 08/11/2006)
08/11/2006	312	SEALED DECLARATION re 309 SEALED MOTION for Protective Order *Regarding Deposition of Michael C. Keeley, Rebuttal Expert Report on Damages, and Continuation of Damages Trial (Declaration of Bas De Blank)* by Fairchild Semiconductor International, Inc., Fairchild Semiconductor Corporation. (Lydon, Tiffany) (Entered: 08/11/2006)
08/14/2006	313	REDACTED VERSION of 307 Letter *to Judge Farnan fr William Marsden with Exhibits A-J re scope of waiver* by Power Integrations, Inc.. (Attachments: # 1 Exhibit A-H# 2 Exhibit I-J)(Marsden, William) (Entered: 08/14/2006)
08/14/2006	314	SEALED MOTION to Strike *Plaintiff's Second Supplemental Report on Damages* - filed by Fairchild Semiconductor International, Inc., Fairchild Semiconductor Corporation. (Lydon, Tiffany) (Entered: 08/14/2006)
08/15/2006	315	SEALED ANSWERING BRIEF in Opposition *to Plaintiff's Motion to*

		Compel Privileged Information 307 filed by Fairchild Semiconductor International, Inc., Fairchild Semiconductor Corporation.Reply Brief due date per Local Rules is 8/22/2006. (Lydon, Tiffany) Modified on 8/16/2006 (dab,). (Entered: 08/15/2006)
08/15/2006	316	NOTICE to Take Deposition of Robert Conrad on August 25, 2006 by Power Integrations, Inc..(Hayes, Sean) (Entered: 08/15/2006)
08/15/2006	317	NOTICE to Take Deposition of Stephen Schott on August 15, 2006 by Power Integrations, Inc..(Hayes, Sean) (Entered: 08/15/2006)
08/16/2006	318	Letter to The Honorable Joseph J. Farnan, Jr. from William J. Marsden, Jr. regarding Power Integrations, Inc.'s Withdrawal of it's Motion re: Fairchild's Waiver of Privilege in Reliance on Opinions of Counsel (D.I. 307) - re 307 Letter. (Marsden, William) (Entered: 08/16/2006)
08/18/2006	319	ANSWERING BRIEF in Opposition re 309 SEALED MOTION for Protective Order *Regarding Deposition of Michael C. Keeley, Rebuttal Expert Report on Damages, and Continuation of Damages Trial*, 314 SEALED MOTION to Strike *Plaintiff's Second Supplemental Report on Damages* filed by Power Integrations, Inc..Reply Brief due date per Local Rules is 8/25/2006. (Marsden, William) (Entered: 08/18/2006)
08/18/2006	320	SEALED DECLARATION re 319 Answering Brief in Opposition, *of William Marsden In support of Combined Response to Defts Motion for Protective Order re Keeley and Defts Motion to Strike Second Supplemental Expert Report on Damages* by Power Integrations, Inc.. (Marsden, William) (Entered: 08/18/2006)
08/18/2006	321	REDACTED VERSION of 309 SEALED MOTION for Protective Order *Regarding Deposition of Michael C. Keeley, Rebuttal Expert Report on Damages, and Continuation of Damages Trial* by Fairchild Semiconductor International, Inc., Fairchild Semiconductor Corporation. (Lydon, Tiffany) (Entered: 08/18/2006)
08/18/2006	322	REDACTED VERSION of 312 Declaration, *of Bas de Blank*, by Fairchild Semiconductor International, Inc., Fairchild Semiconductor Corporation. (Attachments: # 1 Exhibit 1-14# 2 Exhibit 15-30)(Lydon, Tiffany) (Entered: 08/18/2006)
08/18/2006	323	ORDER granting 309 Motion for Protective Order. Pltf shall file any opposition to Dfts' Motion no later than 8/21/06. Dfts shall file any reply brief no later than 8/23/06. Signed by Judge Joseph J. Farnan, Jr. on 8/18/06. (dab,) (Entered: 08/21/2006)
08/21/2006	324	REDACTED VERSION of 314 SEALED MOTION to Strike *Plaintiff's Second Supplemental Report on Damages* by Fairchild Semiconductor International, Inc., Fairchild Semiconductor Corporation. (Lydon, Tiffany) (Entered: 08/21/2006)

08/21/2006	325	Letter to Deborah Krett from Tiffany Geyer Lydon regarding unsealed versions of DI 310 and DI 311. (dab,) (Entered: 08/21/2006)
08/21/2006		CORRECTING ENTRY: clerk replaced PDF for DI 310 and DI 311 with unsealed versions per request in letter dated 8/21/06 DI 325. Determined they do not need to be sealed. (dab,) (Entered: 08/21/2006)
08/22/2006	326	REDACTED VERSION of 315 Answering Brief in Opposition, *to Plaintiff's Motion to Compel Privileged Information* by Fairchild Semiconductor International, Inc., Fairchild Semiconductor Corporation. (Lydon, Tiffany) (Entered: 08/22/2006)
08/22/2006	327	MEMORANDUM ORDER DENYING re 272 MOTION in Limine filed by Power Integrations, Inc., . Signed by Judge Joseph J. Farnan, Jr. on 8/22/06. (dab,) (Entered: 08/23/2006)
08/22/2006	328	MEMORANDUM ORDER DENYING re 274 SEALED MOTION for Reconsideration *Re Bifurcation* filed by Fairchild Semiconductor International, Inc.,, Fairchild Semiconductor Corporation, . Signed by Judge Joseph J. Farnan, Jr. on 8/22/06. (dab,) (Entered: 08/23/2006)
08/22/2006	329	MEMORANDUM ORDER GRANTING re 297 MOTION to Strike *Unauthorized Reply Brief* filed by Fairchild Semiconductor International, Inc.,, Fairchild Semiconductor Corporation, DENYING 275 Letter Motion for Reconsideration. Signed by Judge Joseph J. Farnan, Jr. on 8/22/06. (dab,) (Entered: 08/23/2006)
08/22/2006	330	MEMORANDUM ORDER GRANTING re 291 SEALED MOTION to Compel *Power Integrations to Provide "Pared Down" Infringement Contentions for Trial* filed by Fairchild Semiconductor International, Inc.,, Fairchild Semiconductor Corporation. Power Integrations shall be limited to one claim per patent and three groups of accused products and shall identify the claims, accused products and groupings to Fairchild within 5 days of date of this Order. Signed by Judge Joseph J. Farnan, Jr. on 8/22/06. (dab,) (Entered: 08/23/2006)
08/22/2006		Set/Reset Deadlines: Notice of Compliance deadline set for 8/29/2006 per DI 330. (dab,) (Entered: 08/23/2006)
08/22/2006	331	MEMORANDUM ORDER DENYING re 303 MOTION to Compel *Damages Discovery and to Continue Damages Trial Date* filed by Fairchild Semiconductor International, Inc., Fairchild Semiconductor Corporation EXCEPT that Power Integrations is ordered to immediately provide Fairchild with its restated financial reports as soon as those reports are filed with the SEC. . Signed by Judge Joseph J. Farnan, Jr. on 8/22/06. (dab,) (Entered: 08/23/2006)
08/23/2006		CORRECTING ENTRY: Order DI #323 was linked to DI #309 Sealed

		Motion for Protective Order in ERROR. Order DI #323 granted DI #310 Motion to Shorten Time for Briefing. DI #309 remains to be ruled on by the Court. (dab,) (Entered: 08/23/2006)
08/23/2006	332	SEALED REPLY BRIEF re 314 SEALED MOTION to Strike *Plaintiff's Second Supplemental Report on Damages* filed by Fairchild Semiconductor International, Inc., Fairchild Semiconductor Corporation. (Day, John) (Entered: 08/23/2006)
08/23/2006	333	SEALED DECLARATION re 332 Reply Brief *in Support of (A) Defendants' Motion for Continuation of Damages Trial (DI 309) and (B) Defendants' Motion to Strike Plaintiff's Second Supplemental Report on Damages (DI 314)* by Fairchild Semiconductor International, Inc., Fairchild Semiconductor Corporation. (Day, John) (Entered: 08/23/2006)
08/24/2006	334	MEMORANDUM ORDER granting re 271 Letter Motion in Limine. Signed by Judge Joseph J. Farnan, Jr. on 8/24/06. (dab,) (Entered: 08/24/2006)
08/24/2006	335	MEMORANDUM OPINION re 262 Motion to Quash Subpoena and for Protective Order. Signed by Judge Joseph J. Farnan, Jr. on 8/24/06. (dab,) Modified on 8/24/2006 (dab,). (Entered: 08/24/2006)
08/24/2006	336	Letter to Honorable Joseph J. Farnan from William J. Marsden, Jr. regarding clarification of D.I. 330. (Attachments: # Exhibit A)(Marsden, William) Additional attachment(s) added on 8/25/2006 (dab,). (Entered: 08/24/2006)
08/24/2006	337	ORDER granting re 262 MOTION to Quash *Subpoena and for Protective Order* filed by Intersil Corporation. The 5/9/06 subpoena issued by Power Integrations Inc to Intersil Corporation is Quashed. . Signed by Judge Joseph J. Farnan, Jr. on 8/24/06. (dab,) (Entered: 08/24/2006)
08/25/2006		CORRECTING ENTRY: Clerk replaced PDF for Exhibit A to DI 336 Letter (dab,) (Entered: 08/25/2006)
08/25/2006	338	NOTICE OF SERVICE of Howard Earhart's Responses and Objections to Notice of Subpoena Pursuant to Federal Rule of Civil Procedure 45 re 305 Notice of Service by Power Integrations, Inc. by Fairchild Semiconductor International, Inc., Fairchild Semiconductor Corporation,.(Hayes, Sean) Modified on 8/28/2006 (dab,). (Entered: 08/25/2006)
08/28/2006		CORRECTING ENTRY: Clerk removed duplicate docketing text from DI #338 (dab,) (Entered: 08/28/2006)
08/28/2006	339	REDACTED VERSION of 320 Declaration, *Marsden In Support of*

		Power Integrations Combined Response to Defendants Mtn for Protective Order re Keeley, Rebuttal Expert Report on Damages and Continuation of Damages Trial and Defendants Mtn to Strike Plaintiff's Second Supplemental Report on Damages by Power Integrations, Inc.. (Attachments: # 1 Exhibit A-I# 2 Exhibit J-X)(Marsden, William) (Entered: 08/28/2006)
08/30/2006	340	REDACTED VERSION of 332 Reply Brief by Fairchild Semiconductor International, Inc., Fairchild Semiconductor Corporation. (Lydon, Tiffany) (Entered: 08/30/2006)
08/30/2006	341	REDACTED VERSION of 333 Declaration, by Fairchild Semiconductor International, Inc., Fairchild Semiconductor Corporation. (Lydon, Tiffany) (Entered: 08/30/2006)
08/31/2006	342	NOTICE of PRIOR ART PURSUANT TO 35 U.S.C. SECTION 282 by Fairchild Semiconductor International, Inc., Fairchild Semiconductor Corporation (Day, John) (Entered: 08/31/2006)
09/01/2006	343	SEALED MOTION in Limine *Ltr to Judge Farnan from William J. Marsden re Power Integrations Motion in Limine* - filed by Power Integrations, Inc.. (Marsden, William) (Entered: 09/01/2006)
09/01/2006	344	SEALED DECLARATION re 343 SEALED MOTION in Limine *Ltr to Judge Farnan from William J. Marsden re Power Integrations Motion in Limine of William J. Marsden with Exhibits A - S* by Power Integrations, Inc.. (Marsden, William) (Entered: 09/01/2006)
09/01/2006	345	VERDICT SHEET by Power Integrations, Inc. *Special Verdict and and Interrogatories to the Jury - Validity*. (Marsden, William) (Entered: 09/01/2006)
09/01/2006	346	VERDICT SHEET by Power Integrations, Inc. *Special Verdict and Interrogatories to the Jury - Infringement and Damages*. (Marsden, William) (Entered: 09/01/2006)
09/01/2006	347	Proposed Voir Dire by Power Integrations, Inc.. (Marsden, William) (Entered: 09/01/2006)
09/01/2006	348	Proposed Jury Instructions by Power Integrations, Inc.. (Marsden, William) (Entered: 09/01/2006)
09/01/2006	349	Proposed Jury Instructions by Power Integrations, Inc.. (Marsden, William) (Entered: 09/01/2006)
09/01/2006	350	Letter to Honorable Joseph Farnan from William J. Marsden, Jr. regarding Proposed Jury Questionnaire. (Attachments: # 1 Exhibit Proposed Jury Questionnaire)(Marsden, William) (Entered: 09/01/2006)

09/02/2006	351	NOTICE of filing the following document(s) in paper format: Proposed Joint Pretrial Order. Original document(s) on file in Clerk's Office. Notice filed by Sean Paul Hayes on behalf of Power Integrations, Inc. (Hayes, Sean) (Entered: 09/02/2006)
09/02/2006	352	Proposed Jury Instructions by Fairchild Semiconductor International, Inc., Fairchild Semiconductor Corporation. (Balick, Steven) (Entered: 09/02/2006)
09/02/2006	353	Proposed Voir Dire by Fairchild Semiconductor International, Inc., Fairchild Semiconductor Corporation. (Balick, Steven) (Entered: 09/02/2006)
09/02/2006	354	VERDICT SHEET by Fairchild Semiconductor International, Inc., Fairchild Semiconductor Corporation *(On Infringement and Damages)*. (Balick, Steven) (Entered: 09/02/2006)
09/02/2006	355	VERDICT SHEET by Fairchild Semiconductor International, Inc., Fairchild Semiconductor Corporation *(On Invalidity)*. (Balick, Steven) (Entered: 09/02/2006)
09/02/2006	356	SEALED MOTION in Limine - filed by Fairchild Semiconductor International, Inc., Fairchild Semiconductor Corporation. (Attachments: # 1 Exhibits)(Balick, Steven) (Entered: 09/02/2006)
09/02/2006	357	SEALED DECLARATION re 356 SEALED MOTION in Limine by Fairchild Semiconductor International, Inc., Fairchild Semiconductor Corporation. (Attachments: # 1 Exhibits)(Balick, Steven) Modified on 9/6/2006 by Clerk's Office to indicate that this sealed document is contained in 4 Volumes, under one docket item number as D.I. 357, A, B, C, and D (rbe,). (Entered: 09/02/2006)
09/05/2006	358	Letter to Honorable Joseph J. Farnan from William J. Marsden, Jr. regarding Fairchild Motion in Limines (DI 356). (Marsden, William) (Entered: 09/05/2006)
09/05/2006	360	Proposed Joint Pretrial Order by Power Integrations, Inc. (Paper form maintained in Clerk's Office) (dab,) (Entered: 09/06/2006)
09/06/2006	359	Letter to The Honorable Joseph J. Farnan, Jr. from Steven J. Balick regarding Fairchild's response to plaintiff's September 5, 2006 letter (D.I. 358) concerning Fairchild's motions in limine. (Balick, Steven) (Entered: 09/06/2006)
09/08/2006	361	Letter to The Honorable Joseph J. Farnan, Jr. from John G. Day regarding Power Integrations' motion for reconsideration of the Court's August 22, 2006 Order - re 336 Letter. (Day, John) (Entered: 09/08/2006)
09/08/2006	362	MEMORANDUM AND ORDER granting 336 Letter Request for

		Reconsideration. Pltf shall select a total of 7 claims and 4 groupings of accused products to assert at trial and shall identify them to Dfts by close of business (4:30 PM) on 9/18/06. Signed by Judge Joseph J. Farnan, Jr. on 9/8/06. (dab,) (Entered: 09/08/2006)
09/08/2006		Set/Reset Deadlines: Notice of Compliance deadline set for 9/18/2006 to identify asserted claims and accused products and groupings to Dfts per DI 362 (dab,) (Entered: 09/08/2006)
09/11/2006	363	SEALED ANSWERING BRIEF in Opposition re 356 SEALED MOTION in Limine *of Fairchild's Nineteen Motions* filed by Power Integrations, Inc..Reply Brief due date per Local Rules is 9/18/2006. (Hayes, Sean) (Entered: 09/11/2006)
09/11/2006	364	SEALED DECLARATION re 363 Answering Brief in Opposition *to Fairchild's Nineteen Motions in Limine* by Power Integrations, Inc.. (Hayes, Sean) (Entered: 09/11/2006)
09/11/2006	365	SEALED ANSWERING BRIEF in Opposition re 343 SEALED MOTION in Limine *Ltr to Judge Farnan from William J. Marsden re Power Integrations Motion in Limine* filed by Fairchild Semiconductor International, Inc., Fairchild Semiconductor Corporation.Reply Brief due date per Local Rules is 9/18/2006. (Day, John) (Entered: 09/11/2006)
09/11/2006	366	SEALED DECLARATION re 365 Answering Brief in Opposition, *(Volume I of II of Declaration of Gabriel M. Ramsey)* by Fairchild Semiconductor International, Inc., Fairchild Semiconductor Corporation. (Day, John) (Entered: 09/11/2006)
09/11/2006	367	SEALED DECLARATION re 365 Answering Brief in Opposition, *(Volume II of II of Declaration of Gabriel M. Ramsey)* by Fairchild Semiconductor International, Inc., Fairchild Semiconductor Corporation. (Day, John) (Entered: 09/11/2006)
09/12/2006	368	MOTION for Pro Hac Vice Appearance of Attorney Jonathan Lamberson - filed by Power Integrations, Inc.. (Marsden, William) (Entered: 09/12/2006)
09/12/2006	369	REDACTED VERSION of 356 SEALED MOTION in Limine by Fairchild Semiconductor International, Inc., Fairchild Semiconductor Corporation. (Lydon, Tiffany) (Entered: 09/12/2006)
09/12/2006	370	REDACTED VERSION of 357 Declaration, *of Bas de Blank in Support of Defendants' Motions in Limine*, by Fairchild Semiconductor International, Inc., Fairchild Semiconductor Corporation. (Attachments: # 1 Part 2)(Lydon, Tiffany) (Entered: 09/12/2006)
09/13/2006	371	REDACTED VERSION of 344 Declaration *of William J. Marsden, Jr.*

		In Support of Power Integration's Inc., Motion in Limine by Power Integrations, Inc.. (Attachments: # 1 Exhibit Exhibits A-G# 2 Exhibit Exhibits H-S)(Marsden, William) (Entered: 09/13/2006)
09/13/2006	372	REDACTED VERSION of 343 SEALED MOTION in Limine *Ltr to Judge Farnan from William J. Marsden re Power Integrations Motion in Limine* by Power Integrations, Inc.. (Marsden, William) (Entered: 09/13/2006)
09/14/2006		SO ORDERED, re 368 MOTION for Pro Hac Vice Appearance of Attorney Jonathan Lamberson filed by Power Integrations, Inc. Signed by Judge Joseph J. Farnan, Jr. on 9/14/2006. (maw,) (Entered: 09/14/2006)
09/14/2006	373	REDACTED VERSION of 363 Answering Brief in Opposition *to Fairchild Motion in Limines* by Power Integrations, Inc.. (Hayes, Sean) (Entered: 09/14/2006)
09/14/2006	374	REDACTED VERSION of 364 Declaration *of Sean P. Hayes to Power Integrations Opposition to Fairchild Motion in Limines* by Power Integrations, Inc.. (Attachments: # 1 Exhibit A-J# 2 Exhibit K-N)(Hayes, Sean) (Entered: 09/14/2006)
09/14/2006	375	MOTION for Pro Hac Vice Appearance of Attorney Tamara Fraizer - filed by Power Integrations, Inc.. (Attachments: # 1 Certificate of Service)(Marsden, William) (Entered: 09/14/2006)
09/14/2006		Minute Entry for proceedings held before Judge Joseph J. Farnan, Jr. : Pretrial Conference held on 9/14/2006. Court will enter an order resolving pending Motions as well as a Trial Management Order. (Court Reporter Christine/Hawkins.) (dab,) (Entered: 09/15/2006)
09/15/2006	376	Letter to Honorable Joseph J. Farnan from William J. Marsden, Jr. regarding formal list of claims and groups. (Marsden, William) (Entered: 09/15/2006)
09/18/2006		SO ORDERED, re 375 MOTION for Pro Hac Vice Appearance of Attorney Tamara Fraizer filed by Power Integrations, Inc., . Signed by Judge Joseph J. Farnan, Jr. on 9/18/06. (dab,) (Entered: 09/19/2006)
09/19/2006	377	TRANSCRIPT of Pretrial Conference held on 9/14/2006 before Judge Farnan. Court Reporter: Christine Mason Baird. (Transcript on file in Clerk's Office) (maw,) (Entered: 09/19/2006)
09/19/2006	378	REDACTED VERSION of 365 Answering Brief in Opposition, *to Plaintiff's Motions in Limine* by Fairchild Semiconductor International, Inc., Fairchild Semiconductor Corporation. (Lydon, Tiffany) (Entered: 09/19/2006)
09/19/2006	379	REDACTED VERSION of 366 Declaration *of Gabriel M. Ramsey in*

		Support of Defendants' Opposition to Plaintiff's Motions in Limine (Volume 1 of 2) by Fairchild Semiconductor International, Inc., Fairchild Semiconductor Corporation. (Lydon, Tiffany) (Entered: 09/19/2006)
09/19/2006	380	REDACTED VERSION of 367 Declaration *of Gabriel M. Ramsey in Support of Defendants' Opposition to Plaintiff's Motions in Limine (Volume 2 of 2)* by Fairchild Semiconductor International, Inc., Fairchild Semiconductor Corporation. (Lydon, Tiffany) (Entered: 09/19/2006)
09/19/2006	381	MOTION for Pro Hac Vice Appearance of Attorney Gabriel M. Ramsey - filed by Fairchild Semiconductor International, Inc., Fairchild Semiconductor Corporation. (Lydon, Tiffany) (Entered: 09/19/2006)
09/19/2006	382	Jury Information Questionnaire filed. (dab,) (Entered: 09/19/2006)
09/20/2006	383	MOTION for Pro Hac Vice Appearance of Attorney William L. Anthony - filed by Fairchild Semiconductor International, Inc., Fairchild Semiconductor Corporation. (Lydon, Tiffany) (Entered: 09/20/2006)
09/20/2006	384	MEMORANDUM OPINION. Signed by Judge Joseph J. Farnan, Jr. on 9/20/06. (dab,) (Entered: 09/20/2006)
09/20/2006	385	ORDER denying 309 Motion for Protective Order; granting in part and denying in part 314 Motion to Strike; granting 343 Motion in Limine as to precluding evidence re plaintiff's restatement of earnings, etc., and denying 343 Motion in Limine as to precluding argument that FSD210HD's were not manufactured in the U.S., precluding testimony of Gu-Yeon Wei, and precluding Mr. Conrad from testifying; granting 356 Motion in Limine as to excluding evidence re Power Integration's litigation success against System General or Motorola, excluding testimony from Michael Shields, and excluding emails between GE and Fairchild, and denying 356 Motion in Limine in all other respects. (SEE ORDER FOR DETAILS). Signed by Judge Joseph J. Farnan, Jr. on 9/20/2006. (maw,) (Entered: 09/20/2006)
09/20/2006		SO ORDERED, re 381 MOTION for Pro Hac Vice Appearance of Attorney Gabriel M. Ramsey filed by Fairchild Semiconductor International, Inc., Fairchild Semiconductor Corporation . Signed by Judge Joseph J. Farnan, Jr. on 9/20/2006. (dab,) (Entered: 09/21/2006)
09/25/2006	386	Letter to Honorable Joseph J. Farnan from William J. Marsden, Jr. regarding Court's Order on Fairchild's Motion in Limine (DI 385). (Attachments: # 1 Exhibit A & B)(Marsden, William) (Entered: 09/25/2006)

09/25/2006	387	Exhibit List *(Ex. 6 to Pretrial Order)* by Power Integrations, Inc.. (Marsden, William) (Entered: 09/25/2006)
09/25/2006	388	Exhibit List by Fairchild Semiconductor International, Inc., Fairchild Semiconductor Corporation. (Day, John) (Entered: 09/25/2006)
09/26/2006		SO ORDERED, re 383 MOTION for Pro Hac Vice Appearance of Attorney William L. Anthony filed by Fairchild Semiconductor International, Inc., Fairchild Semiconductor Corporation. Signed by Judge Joseph J. Farnan, Jr. on 9/26/06. (dab,) (Entered: 09/26/2006)
09/26/2006	389	MOTION for Leave to File *a Motion for Reconsideration and Clarification* - filed by Fairchild Semiconductor International, Inc., Fairchild Semiconductor Corporation. (Attachments: # 1 Exhibit 1)(Day, John) (Entered: 09/26/2006)
09/26/2006	390	PROPOSED ORDER re 389 MOTION for Leave to File *a Motion for Reconsideration and Clarification* by Fairchild Semiconductor International, Inc., Fairchild Semiconductor Corporation. (Day, John) (Entered: 09/26/2006)
09/26/2006		LETTER MOTION for Reconsideration and Clarification (attached to 389) - filed by Fairchild Semiconductor International, Inc., Fairchild Semiconductor Corporation. (maw,) (Entered: 09/27/2006)
09/26/2006		OPENING BRIEF in Support of MOTION for Reconsideration and Clarification (attached to 389) - filed by Fairchild Semiconductor International, Inc., Fairchild Semiconductor Corporation.Answering Brief/Response due date is 9/28/2006 by 4:30 p.m. (maw,) (Entered: 09/27/2006)
09/26/2006	391	ORDER granting 389 Motion for Leave to File Motion for Reconsideration and Clarification. Letter motion and brief attached to 389 is deemed filed. Plaintiff's response is due by 4:30 p.m. on 9/28/2006 . Signed by Judge Joseph J. Farnan, Jr. on 9/26/2006. (maw,) (Entered: 09/27/2006)
09/27/2006	392	TRIAL MANAGEMENT ORDER: Jury Trial set for 10/2/2006 09:30 AM in Courtroom 4B before Honorable Joseph J. Farnan, Jr. Parties shall e-file and submit Proposed Jury Instructions and Verdict Form on disk in WordPerfect Format, no later than 9:00 AM on Thursday, October 5, 2006. (See order for details). Signed by Judge Joseph J. Farnan, Jr. on 9/27/06. (dab,) (Entered: 09/27/2006)
09/27/2006		Set/Reset Deadlines: re Proposed Jury Instructions Notice of Compliance deadline set for 10/5/2006. (dab,) (Entered: 09/28/2006)
09/28/2006	393	Letter to Deborah Krett from William J. Marsden, Jr. regarding Request for Electronic Equipment. (Attachments: # 1 Text of Proposed

		Order)(Marsden, William) (Entered: 09/28/2006)
09/28/2006	394	Letter to Ms. Deborah Krett from John G. Day regarding request for electronic equipment. (Attachments: # 1 Text of Proposed Order)(Day, John) (Entered: 09/28/2006)
09/28/2006	395	Letter to Honorable Joseph J. Farnan from William J. Marsden, Jr. regarding Reply to Motion for Reconsideration. (Attachments: # 1 Exhibit A and B)(Marsden, William) (Entered: 09/28/2006)
09/29/2006	396	ORDER That the attorneys and staff listed on this order are permitted to bring into the Boggs Federal Courthouse, for use in Courtroom 4B, laptop computers for proceedings commencing on Monday 10/2/06 and ending 10/6/06. Counsel shall comply with the inspection provisions of the United States Marshal.. Signed by Judge Joseph J. Farnan, Jr. on 9/29/06. (dab,) (Entered: 09/29/2006)
09/29/2006	397	ORDER That the attorneys and staff listed on this order are permitted to bring into the Boggs Federal Courthouse, for use in Courtroom 4B, laptop computers for proceedings commencing on Monday 10/2/06 and ending 10/6/06. Counsel shall comply with the inspection provisions of the United States Marshal . Signed by Judge Joseph J. Farnan, Jr. on 9/29/06. (dab,) (Entered: 09/29/2006)
10/01/2006	398	Proposed Jury Instructions by Power Integrations, Inc., Fairchild Semiconductor International, Inc., Fairchild Semiconductor Corporation. (Marsden, William) (Entered: 10/01/2006)
10/02/2006	399	Exhibit List *(Exhibit 6 to Proposed Pretrial Order)* by Power Integrations, Inc.. (Marsden, William) (Entered: 10/02/2006)
10/02/2006	400	Exhibit List *(Revised) PI Exhibit List with Obj & Key* by Power Integrations, Inc.. (Marsden, William) (Entered: 10/02/2006)
10/02/2006	401	Exhibit List *(Amended)* by Fairchild Semiconductor International, Inc., Fairchild Semiconductor Corporation. (Lydon, Tiffany) (Entered: 10/02/2006)
10/02/2006	402	MOTION for Pro Hac Vice Appearance of Attorney John Hamann - filed by Power Integrations, Inc.. (Marsden, William) (Entered: 10/02/2006)
10/02/2006		Minute Entry for proceedings held before Judge Joseph J. Farnan, Jr. : Jury Trial (Day 1) held on 10/2/2006. (Court Reporter Christine Baird/Heather Troizzi (Hawkins)) (dab,) (Entered: 10/03/2006)
10/03/2006		Minute Entry for proceedings held before Judge Joseph J. Farnan, Jr. : Jury Trial (Day 2) held on 10/3/2006. (Court Reporter Christine Baird/Heather Troizzi (Hawkins)). (maw,) (Entered: 10/04/2006)

10/04/2006	403	Letter to The Honorable Joseph J. Farnan, Jr. from Tiffany Geyer Lydon regarding letter from G. Hopkins Guy, III regarding request for claim construction. (Lydon, Tiffany) (Entered: 10/04/2006)
10/04/2006		SO ORDERED, re 402 MOTION for Pro Hac Vice Appearance of Attorney John Hamann filed by Power Integrations, Inc . Signed by Judge Joseph J. Farnan, Jr. on 10/4/2006. (maw,) (Entered: 10/04/2006)
10/04/2006	404	NOTICE of Withdrawal of Appearance for Sean P. Hayes by Power Integrations, Inc. (Marsden, William) (Entered: 10/04/2006)
10/04/2006		Minute Entry for proceedings held before Judge Joseph J. Farnan, Jr. : Jury Trial (Day 3) held on 10/4/2006. (Court Reporter Heather/Christine.) (dab,) (Entered: 10/05/2006)
10/05/2006	405	Proposed Jury Instructions by Power Integrations, Inc.. (Marsden, William) (Entered: 10/05/2006)
10/05/2006	406	VERDICT SHEET by Power Integrations, Inc.. (Marsden, William) (Entered: 10/05/2006)
10/05/2006	407	Proposed Jury Instructions by Fairchild Semiconductor International, Inc., Fairchild Semiconductor Corporation. (Day, John) (Entered: 10/05/2006)
10/05/2006	408	Letter to Honorable Joseph Farnan from William J. Marsden, Jr. regarding Response to Fairchild Request for Claim Interpretation - re 403 Letter. (Marsden, William) (Entered: 10/05/2006)
10/05/2006	409	MEMORANDUM ORDER denying re 403 Letter Request for new and/or additional claim construction rulings. Signed by Judge Joseph J. Farnan, Jr. on 10/5/06. (dab,) (Entered: 10/05/2006)
10/05/2006		Minute Entry for proceedings held before Judge Joseph J. Farnan, Jr. : Jury Trial (Day 4) held on 10/5/2006. (Court Reporter Heather/Dale.) (dab,) (Entered: 10/06/2006)
10/06/2006	410	Letter to The Honorable Joseph J. Farnan, Jr. from John G. Day regarding request that defendants' exhibits DX-517, 520, and 521 be admitted as evidence. (Day, John) (Entered: 10/06/2006)
10/06/2006	413	Final Jury Instructions. (bkb,) (Entered: 10/10/2006)
10/06/2006		Minute Entry for proceedings held before Judge Joseph J. Farnan, Jr. : Jury Trial (Day 5) held on 10/6/2006. (Court Reporter Heather/Dale.) (maw,) (Entered: 10/10/2006)
10/06/2006	414	SPECIAL VERDICT SHEET. (bkb,) (Entered: 10/10/2006)
10/10/2006	411	Letter to Honorable Joseph J. Farnan from William J. Marsden, Jr.

		regarding Rule 50(a) - as handed out in court on 10/6. (Marsden, William) (Entered: 10/10/2006)
10/10/2006	412	Letter to The Honorable Joseph J. Farnan, Jr. from William J. Marsden, Jr. regarding Response to Fairchild letter re DX 517, 520, and 521 - re 410 Letter. (Marsden, William) (Entered: 10/10/2006)
10/10/2006	415	JURY VERDICT (Special Verdict Form); Fairchild has infringed the '876, '851, '366, and '075 patents; total damages due to Power Integrations is $33,981,781.00; applicable royalty rates are 15%. (bkb,) (Entered: 10/10/2006)
10/10/2006		Minute Entry for proceedings held before Judge Joseph J. Farnan, Jr. : Jury Verdict returned on 10/10/2006. (Court Reporter Dibbs.) (maw,) (Entered: 10/10/2006)
10/12/2006	416	TRANSCRIPT (Volume I) of Jury Trial held on 10/2/2006 before Judge Farnan. Court Reporter: Heather Triozzi. (Transcript on file in Clerk's Office) (maw,) (Entered: 10/12/2006)
10/12/2006	417	TRANSCRIPT (Volume II) of Jury Trial held on 10/3/2006 before Judge Farnan. Court Reporter: Heather Triozzi. (Transcript on file in Clerk's Office) (maw,) (Entered: 10/12/2006)
10/12/2006	418	TRANSCRIPT (Volume III) of Jury Trial held on 10/4/2006 before Judge Farnan. Court Reporter: Heather Triozzi. (Transcript on file in Clerk's Office) (maw,) (Entered: 10/12/2006)
10/12/2006	419	TRANSCRIPT (Volume IV) of Jury Trial held on 10/5/2006 before Judge Farnan. Court Reporter: Dale Hawkins. (Transcript on file in Clerk's Office) (maw,) (Entered: 10/12/2006)
10/12/2006	420	TRANSCRIPT (Volume V) of Jury Trial held on 10/6/2006 before Judge Farnan. Court Reporter: Heather Triozzi. (Transcript on file in Clerk's Office) (maw,) (Entered: 10/12/2006)
10/12/2006	421	ORDER that Clerk of the Court is directed to furnish lunch for 8 jurors on 10/2/06 - 10/6/06 and 10/10/06 . Signed by Judge Joseph J. Farnan, Jr. on 10/12/06. (dab,) (Entered: 10/13/2006)
11/03/2006	422	Supplemental NOTICE of PRIOR ART PURSUANT TO 35 U.S.C. SECTION 282 by Fairchild Semiconductor International, Inc., Fairchild Semiconductor Corporation (Maguire, Lauren) (Entered: 11/03/2006)
11/03/2006	423	OPENING BRIEF in Support *of Defendants' Request to Use Eleven Prior Art References During the Invalidity Phase of Trial* filed by Fairchild Semiconductor International, Inc., Fairchild Semiconductor Corporation.Answering Brief/Response due date per Local Rules is 11/20/2006. (Day, John) (Entered: 11/03/2006)

11/10/2006	424	Letter to The Honorable Joseph J. Farnan, Jr. from William J. Marsden, Jr. and John G. Day regarding the parties' joint request to schedule pre-trial conference for validity phase of trial. (Day, John) (Entered: 11/10/2006)
11/13/2006	425	ANSWERING BRIEF in Opposition *to Defendants motion to add prior art references to the invalidity trial and cross-motion to preclude Fairchild's Untimely Contentions and Documents at Trial (DI 423)* filed by Power Integrations, Inc..Reply Brief due date per Local Rules is 11/24/2006. (Marsden, William) (Entered: 11/13/2006)
11/13/2006	426	SEALED DECLARATION re 425 Answering Brief in Opposition, *of William J. Marsden In Support of Combined Opposition to Defendants' Motion to Add Prior Art References to the Invalidity Trial and Cross-Motion to Preclude Fairchild's Untimely Contentions and Documents at Trial* by Power Integrations, Inc.. (Marsden, William) (Entered: 11/13/2006)
11/15/2006	427	Letter to Honorable Joseph J. Farnan from William J. Marsden, Jr. regarding issues for validity trial on 12/4. (Attachments: # 1 Exhibit A - Jury Instruction re first trial# 2 Exhibit B - Verdict form for validity trial# 3 Exhibit C - witness list)(Marsden, William) (Entered: 11/15/2006)
11/15/2006	428	Letter to The Honorable Joseph J. Farnan, Jr. from John G. Day regarding issues for validity trial. (Attachments: # 1 Exhibit A# 2 Exhibit B)(Day, John) (Entered: 11/15/2006)
11/16/2006		Set Deadlines/Hearings: Telephone Pretrial Conference (re: Invalidity J/T) set for 11/20/2006 04:00 PM in Chambers before Honorable Joseph J. Farnan, Jr. Counsel for Plaintiff shall arrange the call. (dlk) (Entered: 11/16/2006)
11/17/2006	429	Letter to The Honorable Joseph J. Farnan, Jr. from William J. Marsden, Jr. regarding juror questionnaire for validity trial on 12/4/06. (Attachments: # 1 Exhibit Juror Information questionnaire for Validity trial)(Marsden, William) (Entered: 11/17/2006)
11/17/2006	430	SEALED ANSWERING BRIEF in Opposition *to Power Integrations' Cross-Motion Re Fairchild's Prior Art Documents and Contentions at Trial* filed by Fairchild Semiconductor International, Inc., Fairchild Semiconductor Corporation.Reply Brief due date per Local Rules is 11/30/2006. (Maguire, Lauren) (Entered: 11/17/2006)
11/17/2006	431	SEALED DECLARATION re 430 Answering Brief in Opposition, *(Declaration of Gabriel M. Ramsey)* by Fairchild Semiconductor International, Inc., Fairchild Semiconductor Corporation. (Maguire, Lauren) (Entered: 11/17/2006)

11/20/2006		Minute Entry for proceedings held before Judge Joseph J. Farnan, Jr. : Telephone Conference held on 11/20/2006. (Court Reporter Heather from Hawkins.) (dab) (Entered: 11/22/2006)
11/21/2006	432	TRIAL MANAGEMENT ORDER:Jury Trial set for 12/4/2006 09:30 AM in Courtroom 4B before Honorable Joseph J. Farnan, Jr. Pltf and Dft are allocated 9.5 hours in court trial time. Opening statements are limited to one hour. Parties shall submit Proposed Jury Instructions and Verdict Form no later than 9:00 AM on 12/5/06. Signed by Judge Joseph J. Farnan, Jr. on 11/21/06. (See order for complete details)(dab) (Entered: 11/21/2006)
11/21/2006		Set/Reset Deadlines: Notice of Compliance deadline set for 12/5/2006 for DI #432. (dab) (Entered: 11/21/2006)
11/21/2006	433	REDACTED VERSION *OF DECLARATION OF WILLIAM J. MARSDEN, JR. IN SUPPORT OF POWER INTEGRATIONS, INC.'S COMBINED OPPOSITION TO DEFENDANTS' MOTION TO ADD PRIOR ART REFERENCES TO THE INVALIDITY TRIAL AND CROSS-MOTION TO PRECLUDE FAIRCHILD'S UNTIMELY CONTENTIONS AND DOCUMENTS AT TRIAL* by Power Integrations, Inc.. (Attachments: # 1 Exhibit A# 2 Exhibit B# 3 Exhibit C# 4 Exhibit D# 5 Exhibit E# 6 Exhibit F# 7 Exhibit G# 8 Exhibit H# 9 Exhibit I -# 10 Exhibit J - REDACTED# 11 Exhibit K - Part 1# 12 Exhibit K - Part 2# 13 Exhibit K - Part 3# 14 Exhibit K - Part 4# 15 Exhibit L# 16 Exhibit M# 17 Exhibit N# 18 Exhibit O# 19 Exhibit P# 20 Exhibit Q)(Marsden, William) (Entered: 11/21/2006)
11/22/2006	434	SEALED REPLY BRIEF *(Supplemental Brief in Support of Defendants' Request to Use Eleven Prior Art References During the Invalidity Phase of Trial)* filed by Fairchild Semiconductor International, Inc., Fairchild Semiconductor Corporation. (Maguire, Lauren) (Entered: 11/22/2006)
11/22/2006	435	SEALED DECLARATION re 434 Reply Brief, *(Declaration of Gabriel M. Ramsey)* by Fairchild Semiconductor International, Inc., Fairchild Semiconductor Corporation. (Maguire, Lauren) (Entered: 11/22/2006)
11/22/2006	436	TRANSCRIPT of Teleconference held on 11/20/06 before Judge Farnan, Jr. Court Reporter: Heather M Triozzi. (Transcript on file in Clerk's Office) (dab) (Entered: 11/22/2006)
11/27/2006	437	REPLY BRIEF *Power Integrations Response to Fairchild's Supplemental Brief re Prior Art References and Invalidity Contentions (DI 434)* filed by Power Integrations, Inc.. (Marsden, William) (Entered: 11/27/2006)

11/27/2006	438	SEALED DECLARATION re 437 Reply Brief *Supplemental Declaration of William J. Marsden, Jr. in Support of Response to Fairchild's Supplemental Brief re Prior Art References and Invalidity Contentions* by Power Integrations, Inc.. (Marsden, William) (Entered: 11/27/2006)
11/27/2006	439	Exhibit List *(For the Validity and Inequitable Conduct Trials)* by Fairchild Semiconductor International, Inc., Fairchild Semiconductor Corporation. (Balick, Steven) (Entered: 11/27/2006)
11/28/2006	440	Exhibit List *(Defendants' Amended Exhibit List For The Validity And Inequitable Conduct Trials)* by Fairchild Semiconductor International, Inc., Fairchild Semiconductor Corporation. (Maguire, Lauren) (Entered: 11/28/2006)
11/28/2006	441	REDACTED VERSION of 430 Answering Brief in Opposition, by Fairchild Semiconductor International, Inc., Fairchild Semiconductor Corporation. (Maguire, Lauren) (Entered: 11/28/2006)
11/28/2006	442	REDACTED VERSION of 431 Declaration by Fairchild Semiconductor International, Inc., Fairchild Semiconductor Corporation. (Attachments: # 1 Exhibit 1-10# 2 Exhibit 11-15# 3 Exhibit 16 part 1# 4 Exhibit 16 part 2# 5 Exhibit 17-25# 6 Exhibit 26 part 1# 7 Exhibit 26 part 2)(Maguire, Lauren) (Entered: 11/28/2006)
11/28/2006	443	Letter to Honorable Joseph J. Farnan, Jr. from William J. Marsden, Jr. regarding KSR Case. (Marsden, William) (Entered: 11/28/2006)
11/28/2006	444	Letter to The Honorable Joseph J. Farnan, Jr. from Steven J. Balick regarding Fairchild's view as to whether the Supreme Court's decision in KSR v. Teleflex could impact this case. (Balick, Steven) (Entered: 11/28/2006)
11/29/2006	445	Exhibit List *for validity trial* by Power Integrations, Inc.. (Marsden, William) (Entered: 11/29/2006)
11/30/2006		Minute Entry for proceedings held before Judge Joseph J. Farnan, Jr. : Telephone Conference held on 11/30/2006. (Court Reporter Valerie Gunning.) (dab) (Entered: 12/01/2006)
11/30/2006		CORRECTING ENTRY: Order dated 11/29/06 removed from docket as PDF was not attached. Order will be redocketed. (dab) (Entered: 12/01/2006)
11/30/2006	446	MEMORANDUM ORDER that trial scheduled for 12/4/06 is CANCELED. Setting Trial Management Order Deadlines:Jury Trial set for 5/7/2007 09:30 AM in Courtroom 4B before Honorable Joseph J. Farnan, Jr. Dft's request to use additional prior art references is GRANTED. Dfts shall submit a supplemental report of expert witness

		by 12/29/06. Depostions of Dr. Horowitz and expert selected by Pltf for rebuttal shall be completed by 3/23/07. Signed by Judge Joseph J. Farnan, Jr. on 11/30/06. (dab) (Entered: 12/01/2006)
11/30/2006		Set/Reset Deadlines: Notice of Compliance deadline set for 12/29/2006. (dab) (Entered: 12/01/2006)
12/01/2006	447	REDACTED VERSION of 434 Reply Brief, by Fairchild Semiconductor International, Inc., Fairchild Semiconductor Corporation. (Maguire, Lauren) (Entered: 12/01/2006)
12/01/2006	448	REDACTED VERSION of 435 Declaration by Fairchild Semiconductor International, Inc., Fairchild Semiconductor Corporation. (Maguire, Lauren) (Entered: 12/01/2006)
12/06/2006	449	Letter to The Honorable Joseph J. Farnan, Jr. from John G. Day regarding invalidity trial date. (Day, John) (Entered: 12/06/2006)
12/07/2006	450	TRANSCRIPT of Telephone Conference held on 11/30/06 before Judge Farnan, Jr.. Court Reporter: Valerie J. Gunning. (Transcript on file in Clerk's Office) (dab) (Entered: 12/07/2006)
12/07/2006	451	Letter to Honorable Joseph J. Farnan from William J. Marsden, Jr. regarding Response to Mr. Day's letter re trial date (DI 449) - re 449 Letter. (Marsden, William) (Entered: 12/07/2006)
12/11/2006	452	Letter to Counsel from Judge Joseph J. Farnan, Jr. regarding trial scheduled for June 4 - 7. (dab) (Entered: 12/12/2006)
12/14/2006	453	NOTICE of Change of Address by Steven J. Balick (Balick, Steven) (Entered: 12/14/2006)
12/15/2006		Remark: Please note a change of the procedure for filing non-case dispositive motions in patent cases. This procedure is effective immediately and shall be used in lieu of the discovery dispute procedure in all existing Scheduling Orders. Please see Standing Order for details at: http://www.ded.uscourts.gov/JJF/CaseMgmt/ordrenondispmotions.pdf (dlk) (Entered: 12/15/2006)
12/21/2006		Set/Reset Scheduling Order Deadlines: Jury Trial set for 6/4/2007 09:30 AM in Courtroom 4B before Honorable Joseph J. Farnan, Jr. (dab) (Entered: 12/21/2006)
12/22/2006	454	DEFICIENCY NOTICE by the Court issued to Power Integrations re 438 Declaration. (dab) (Entered: 12/22/2006)
12/22/2006	455	REDACTED VERSION of 438 Declaration, *of William J. Marsden In Support of Power Integrations Response to Fairchild Supplemental Brief re Prior Art References and Invalidity Contentions* by Power

		Integrations, Inc.. (Marsden, William) (Entered: 12/22/2006)
02/07/2007	456	MOTION to Preclude *Use by Fairchild of Additional Invalidity Materials First Disclosed After the Close of Discovery, and After the Initial Trial* - filed by Power Integrations, Inc.. (Attachments: # 1 Text of Proposed Order)(Marsden, William) Additional attachment(s) added on 2/12/2007 (lec,). (Entered: 02/07/2007)
02/07/2007	457	OPENING BRIEF in Support re 456 MOTION to Preclude *Use by Fairchild of Additional Invalidity Materials First Disclosed After the Close of Discovery, and After the Initial Trial* filed by Power Integrations, Inc..Answering Brief/Response due date per Local Rules is 2/26/2007. (Marsden, William) (Entered: 02/07/2007)
02/08/2007	458	NOTICE of Motion by Power Integrations, Inc. re 456 MOTION to Preclude *Use by Fairchild of Additional Invalidity Materials First Disclosed After the Close of Discovery, and After the Initial Trial* (Marsden, William) (Entered: 02/08/2007)
02/08/2007	459	NOTICE of Motion for Leave to Reply to Fairchild's Supplementary Export Report of Dr. Peter Gwozdz by Power Integrations, Inc. (Marsden, William) (Entered: 02/08/2007)
02/08/2007	460	MOTION Leave to Reply to Fairchild's Supplementary Expert Report of Dr. Peter Gwozdz re 459 Notice (Other) - filed by Power Integrations, Inc.. (Attachments: # 1 Text of Proposed Order)(Marsden, William) (Entered: 02/08/2007)
02/08/2007	461	OPENING BRIEF in Support re 460 MOTION Leave to Reply to Fairchild's Supplementary Expert Report of Dr. Peter Gwozdz re 459 Notice (Other) filed by Power Integrations, Inc..Answering Brief/Response due date per Local Rules is 2/26/2007. (Marsden, William) (Entered: 02/08/2007)
02/08/2007	462	SEALED DECLARATION re 461 Opening Brief in Support, *of Motion for Leave to Reply to Fairchild's Supplementary Expert Report of Dr. Peter Gwozdz* by Power Integrations, Inc.. (Marsden, William) (Entered: 02/08/2007)
02/08/2007		CORRECTING ENTRY: Exchanged Main Document of D.I. # 456 with CORRECTED VERSION (per Atty request). (lec) (Entered: 02/12/2007)
02/22/2007	463	SEALED ANSWER BRIEF re 460 MOTION Leave to Reply to Fairchild's Supplementary Expert Report of Dr. Peter Gwozdz re 459 Notice (Other), 456 MOTION to Preclude *Use by Fairchild of Additional Invalidity Materials First Disclosed After the Close of Discovery, and After the Initial Trial* filed by Fairchild Semiconductor International, Inc., Fairchild Semiconductor Corporation. (Day, John)

		Modified on 2/23/2007 (lec,). (Entered: 02/22/2007)
02/23/2007		Set Briefing Schedule: Reply Brief due 3/1/2007 re D.I. # 463 Answer Brief to D.I. # 460 Motion. (lec) (Entered: 02/23/2007)
02/23/2007		CORRECTING ENTRY: Changed docket text of D.I. # 463 to correctly read "SEALED ANSWER BRIEF" and set Reply Brief due date (per Atty Request). (lec) (Entered: 02/23/2007)
03/01/2007	464	REDACTED VERSION of 463 Reply Brief, by Fairchild Semiconductor International, Inc., Fairchild Semiconductor Corporation. (Maguire, Lauren) (Entered: 03/01/2007)
03/02/2007		ORAL ORDER: For the reasons stated on the record during the 3/2/07 Motion day Hearing, D.I. 460 MOTION Leave to Reply to Fairchild's Supplementary Expert Report of Dr. Peter Gwozdz is GRANTED; D.I. 456 MOTION to Preclude *Use by Fairchild of Additional Invalidity Materials First Disclosed After the Close of Discovery, and After the Initial Trial* filed by Power Integrations, Inc. is DENIED. Ordered by Judge Joseph J. Farnan, Jr. on 03/02/2007. (dlk) (Entered: 03/02/2007)
03/02/2007		Minute Entry for proceedings held before Judge Joseph J. Farnan, Jr. : Motion Day Hearing held on 3/2/2007. re D.I. 456 and D.I. 460 . Oral Order issued. (Court Reporter Heather M. Triozzi.) (lec) (Entered: 03/06/2007)
03/06/2007	465	TRANSCRIPT of Motion Hearing held on 3/2/2007 before Judge Joseph J. Farnan, Jr. Court Reporter: Heather M. Triozzi. (Transcript on file in Clerk's Office) (lec) (Entered: 03/07/2007)
03/09/2007	466	Letter to The Honorable Joseph J. Farnan, Jr. from William J. Marsden, Jr. regarding update on status of Power Integrations' earnings restatements (enc Power Integrations' 2005 Annual Report on Form 10-K). (Marsden, William) Modified on 3/9/2007 (lec,). (Entered: 03/09/2007)
03/09/2007	467	NOTICE of filing the following document(s) in paper format: Tab A to 3/9/07 Letter to the Honorable Joseph J. Farnan, Jr. re Power Integrations' earnings restatements. Original document(s) on file in Clerk's Office. Notice filed by William J. Marsden, Jr on behalf of Power Integrations, Inc. (Marsden, William) (Entered: 03/09/2007)
03/09/2007		CORRECTING ENTRY: Exchanged D.I. 466 with Amended Version of Ltr which now reads "order of a few tenths of a percent (0.006 change for 2004 and 0.003 change for 2002)." (per Atty request). (lec) (Entered: 03/09/2007)
03/16/2007	468	NOTICE of Motion to De-Designate DX-483 A Fairchild document used in Open Court during the First Trial by Power Integrations, Inc.

		(Marsden, William) (Entered: 03/16/2007)
03/16/2007	469	MOTION de-designate DX 438 re 468 Notice (Other) - filed by Power Integrations, Inc.. (Attachments: # 1 Text of Proposed Order)(Marsden, William) (Entered: 03/16/2007)
03/16/2007	470	SEALED OPENING BRIEF in Support re 469 MOTION de-designate DX 438 re 468 Notice (Other) filed by Power Integrations, Inc..Answering Brief/Response due date per Local Rules is 4/2/2007. (Marsden, William) (Entered: 03/16/2007)
03/16/2007	471	SEALED DECLARATION re 469 MOTION de-designate DX 438 re 468 Notice (Other) by Power Integrations, Inc.. (Marsden, William) (Entered: 03/16/2007)
03/20/2007		Remark: Pltf's Motion to De-Designate will not be placed on the Motion Day calendar until Pltf. complies with para. III of Standing Order dated December 15, 2006. (dlk) (Entered: 03/20/2007)
03/30/2007	472	ANSWERING BRIEF in Opposition re 469 MOTION de-designate DX 438 re 468 Notice (Other) filed by Fairchild Semiconductor International, Inc., Fairchild Semiconductor Corporation.Reply Brief due date per Local Rules is 4/12/2007. (Day, John) (Entered: 03/30/2007)
04/06/2007	473	REDACTED VERSION of 470 Opening Brief in Support *In Support of Its Motion to De-Designate DX 483* by Power Integrations, Inc.. (Marsden, William) (Entered: 04/06/2007)
04/06/2007	474	REDACTED VERSION of 471 Declaration *of William J. Marsden In Support of Motion to De-Designate DX 483* by Power Integrations, Inc.. (Attachments: # 1 Exhibit A-F)(Marsden, William) (Entered: 04/06/2007)
04/06/2007	475	REPLY BRIEF re 469 MOTION de-designate DX 438 re 468 Notice (Other) filed by Power Integrations, Inc.. (Marsden, William) (Entered: 04/06/2007)
04/13/2007	476	SEALED DOCUMENT. Signed by Judge Joseph J. Farnan, Jr. on 4/13/2007. (lec) (Entered: 04/13/2007)
04/24/2007	477	NOTICE OF SERVICE of Supplemental Rebuttal Expert Report of Robert Blauschild on 2/20/07 by Power Integrations, Inc..(Marsden, William) (Entered: 04/24/2007)
05/09/2007	478	SEALED MOTION in Limine *Re Invalidity Trial* - filed by Fairchild Semiconductor International, Inc., Fairchild Semiconductor Corporation. (Maguire, Lauren) (Entered: 05/09/2007)
05/11/2007	479	SEALED MOTION in Limine *for Invalidity trial* - filed by Power

		Integrations, Inc.. (Marsden, William) (Entered: 05/11/2007)
05/16/2007	480	REDACTED VERSION of 478 SEALED MOTION in Limine *Re Invalidity Trial* by Fairchild Semiconductor International, Inc., Fairchild Semiconductor Corporation. (Maguire, Lauren) (Entered: 05/16/2007)
05/18/2007	481	REDACTED VERSION of 479 MOTION in Limine *for Invalidity trial* by Power Integrations, Inc.. (Attachments: # 1 Exhibit A-C)(Marsden, William) (Entered: 05/18/2007)
05/22/2007	482	Letter to Honorable Joseph J. Farnan, Jr. from William J. Marsden and John Day regarding Jury Questionnaire for Validity Trial on 6/4/07. (Attachments: # 1 Exhibit Jury Questionnaire for Validity Trial)(Marsden, William) (Entered: 05/22/2007)
05/22/2007	483	MEMORANDUM ORDER regarding e-mail submissions from the parties regarding a dispute in connection with late document production. Unless the parties advise the Court by 4:30 on May 23, 2007 that both agree to the trial beg. June 4, 2007, the Court will continue the trial. The parties shall submit memoranda on their positions by May 31, 2007. Signed by Judge Joseph J. Farnan, Jr. on 05/22/2007. (dlk) (Entered: 05/22/2007)
05/23/2007	484	Letter to The Honorable Joseph J. Farnan, Jr. from John G. Day regarding continuance of validity trial. (Day, John) (Entered: 05/23/2007)
05/23/2007	485	SEALED ANSWERING BRIEF in Opposition re 478 SEALED MOTION in Limine *Re Invalidity Trial Power Integrations' Opposition to Fairchild's Third Set of Motions in Limine* filed by Power Integrations, Inc..Reply Brief due date per Local Rules is 6/4/2007. (Marsden, William) (Entered: 05/23/2007)
05/23/2007	486	Letter to The Honorable Joseph L. Farnan, Jr. from William J. Marsden, Jr. regarding schedule of validity trial - re 483 Memorandum and Order,. (Attachments: # 1 Exhibit A# 2 Exhibit B# 3 Exhibit C# 4 Exhibit D)(Marsden, William) (Entered: 05/23/2007)
05/24/2007	487	Letter to The Honorable Joseph J. Farnan, Jr. from John G. Day regarding Power Integration's request for reconsideration of the Court's May 22, 2007 Order. (Day, John) (Entered: 05/24/2007)
05/24/2007		ORAL ORDER: Per the Court's Order dated 5/22/07(D.I. 483) and the letter filed by John Day, Esq. (D.I. 484) stating that the parties are unable to agree, the Jury Trial scheduled to commence June 4, 2007 is CANCELLED. The Jury Trial will be rescheduled on a date to be determined within (1) one to (8) eight weeks. Ordered by Judge Joseph J. Farnan, Jr. on 05/24/2007. (dlk) (Entered: 05/24/2007)

05/25/2007	488	SEALED ANSWERING BRIEF in Opposition re 479 MOTION in Limine *for Invalidity trial* filed by Fairchild Semiconductor International, Inc., Fairchild Semiconductor Corporation.Reply Brief due date per Local Rules is 6/7/2007. (Maguire, Lauren) (Entered: 05/25/2007)
05/31/2007	489	REDACTED VERSION of 485 Answering Brief in Opposition, *to Fairchild Third Set of Motions In Limine* by Power Integrations, Inc.. (Marsden, William) (Entered: 05/31/2007)
05/31/2007	490	Letter to Honorable Joseph J. Farnan from William J. Marsden and John Day regarding Trial date proposal. (Marsden, William) (Entered: 05/31/2007)
05/31/2007	491	SEALED MEMORANDUM in Support *of Proposed Trial Date* filed by Fairchild Semiconductor International, Inc., Fairchild Semiconductor Corporation.Answering Brief/Response due date per Local Rules is 6/18/2007. (Maguire, Lauren) (Entered: 05/31/2007)
06/04/2007	492	REDACTED VERSION of 488 Answering Brief in Opposition by Fairchild Semiconductor International, Inc., Fairchild Semiconductor Corporation. (Attachments: # 1 Exhibit A-H)(Maguire, Lauren) (Entered: 06/04/2007)
06/07/2007	493	REDACTED VERSION of 491 MEMORANDUM in Support by Fairchild Semiconductor International, Inc., Fairchild Semiconductor Corporation. (Maguire, Lauren) (Entered: 06/07/2007)
06/14/2007	494	Letter to The Honorable Joseph J. Farnan, Jr. from William J. Marsden, Jr. regarding continued depos of Eklund and Beasom and - re 491 MEMORANDUM in Support. (Marsden, William) (Entered: 06/14/2007)
06/14/2007	495	Letter to The Honorable Joseph J. Farnan, Jr. from John G. Day regarding response to Power Integrations' June 14th letter (D.I. 494). (Day, John) (Entered: 06/14/2007)
06/20/2007	496	SEALED MOTION to Compel *Production of Documents of Dr. Klas Eklund for Forensic Testing* - filed by Fairchild Semiconductor International, Inc., Fairchild Semiconductor Corporation. (Balick, Steven) (Entered: 06/20/2007)
06/21/2007	497	NOTICE of MOTION / Defendants' Motion to Compel Production of Documents of Dr. Klas Eklund for Forensic Testing by Fairchild Semiconductor International, Inc., Fairchild Semiconductor Corporation re 496 SEALED MOTION to Compel *Production of Documents of Dr. Klas Eklund for Forensic Testing* (Balick, Steven) (Entered: 06/21/2007)

06/22/2007		Remark: D.I. 496 Motion to Compel must be completed briefing by July 9, 2007 or it will be stricken. (dlk) (Entered: 06/25/2007)
06/25/2007	498	Letter to Ms. Deborah Krett from Steven J. Balick regarding briefing on defendants motion to compel production of documents of Dr. Klas Eklund for forensic testing (D.I. 496). (Balick, Steven) (Entered: 06/25/2007)
06/27/2007	499	REDACTED VERSION of 496 SEALED MOTION to Compel *Production of Documents of Dr. Klas Eklund for Forensic Testing* by Fairchild Semiconductor International, Inc., Fairchild Semiconductor Corporation, Fairchild Semiconductor International, Inc., Fairchild Semiconductor Corporation. (Maguire, Lauren) Additional attachment(s), Exhibits 1 thru 3, added on 6/27/2007 (lec,). (Entered: 06/27/2007)
06/27/2007		CORRECTING ENTRY: Added Redacted Exhibits 1 thru 3 to D.I. 499 per atty request. (lec) (Entered: 06/27/2007)
06/29/2007	500	Letter to Deborah Krett from William J. Marsden, Jr. regarding Briefing Schedule. (Marsden, William) (Entered: 06/29/2007)
06/29/2007	501	ANSWERING BRIEF in Opposition re 496 SEALED MOTION to Compel *Production of Documents of Dr. Klas Eklund for Forensic Testing* filed by Power Integrations, Inc..Reply Brief due date per Local Rules is 7/12/2007. (Marsden, William) (Entered: 06/29/2007)
06/29/2007	502	DECLARATION re 501 Answering Brief in Opposition *of William J. Marsden in Support of Opposition to Defendants Motion to Compel Production of documents of Dr. Klas Eklund for Forensic Testing* by Power Integrations, Inc.. (Attachments: # 1 Exhibit A# 2 Exhibit B# 3 Exhibit C# 4 Exhibit D# 5 Exhibit E# 6 Exhibit F# 7 Exhibit G)(Marsden, William) (Entered: 06/29/2007)
07/03/2007	503	SEALED REPLY BRIEF re 496 SEALED MOTION to Compel *Production of Documents of Dr. Klas Eklund for Forensic Testing* filed by Fairchild Semiconductor International, Inc., Fairchild Semiconductor Corporation. (Maguire, Lauren) (Entered: 07/03/2007)
07/05/2007	504	REDACTED VERSION of 503 Reply Brief by Fairchild Semiconductor International, Inc., Fairchild Semiconductor Corporation. (Day, John) (Entered: 07/05/2007)
07/13/2007		ORAL ORDER GRANTING D.I. 496 SEALED MOTION to Compel *Production of Documents of Dr. Klas Eklund for Forensic Testing* filed by Fairchild Semiconductor International, Inc., Fairchild Semiconductor Corporation. Trial will commence on September 17, 2007. Ordered by Judge Joseph J. Farnan, Jr. on 07/13/2007 at Motion Day Hearings. (dlk) (Entered: 07/13/2007)

07/13/2007		Set Deadlines/Hearings: Jury Trial set for 9/17/2007 09:30 AM in Courtroom 4B before Honorable Joseph J. Farnan, Jr.. (dlk) (Entered: 07/13/2007)
07/13/2007		Minute Entry for proceedings held before Judge Joseph J. Farnan, Jr. : Motion Day Hearing held on 7/13/2007 re 496 SEALED MOTION to Compel *Production of Documents of Dr. Klas Eklund for Forensic Testing*. The Court GRANTED the Motion. No additional discovery will be allowed. Trial will commence on 9/17/2007. (Court Reporter Heather Triozzi.) (lec) (Entered: 07/16/2007)
07/20/2007	505	TRANSCRIPT of Motion Hearing held on July 13, 2007 before Judge Farnan. Court Reporter: Heather Triozzi, Hawkins Reporting Svc.. (Transcript on file in Clerk's Office) (dlk) (Entered: 07/23/2007)
07/31/2007	506	PROPOSED ORDER as to timing of the filing of applications regarding forensic testing by Power Integrations, Inc., Fairchild Semiconductor International, Inc., Fairchild Semiconductor Corporation. (Day, John) (Entered: 07/31/2007)
08/02/2007		SO ORDERED D.I. 506 STIPULATED Order As To Timing Of The Filing Of Applications Regarding Forensic Testing by extending the 8/24/2007 date by one week such that motions and applications related to forensic testing of the documents shall be due on 8/31/2007 (See Stipulation for Further Details). Signed by Judge Joseph J. Farnan, Jr. on 8/2/2007. (lec) (Entered: 08/06/2007)
08/08/2007	507	Letter to Honorable Joseph J. Farnan from William J. Marsden, Jr. regarding regarding Jury Questionnaire for Validity Trial on 9/17/07. (Attachments: # 1 Exhibit Jury Questionnaire for Validity Trial)(Marsden, William) (Entered: 08/08/2007)
08/29/2007	508	ORDER Setting Hearings: Pretrial Conference set for 9/12/2007 at 01:30 PM in Courtroom 4B before Honorable Joseph J. Farnan, Jr. Signed by Judge Joseph J. Farnan, Jr. on 8/29/2007. (lec) (Entered: 08/30/2007)
08/31/2007	509	SEALED MOTION to Preclude *Admission of Certain Evidence Related to Fairchild's Forensic Testing* - filed by Power Integrations, Inc.. (Compton, Kyle) (Entered: 08/31/2007)
08/31/2007	510	SEALED DECLARATION re 509 SEALED MOTION to Preclude *Admission of Certain Evidence Related to Fairchild's Forensic Testing of Kyle Wagner Compton* by Power Integrations, Inc.. (Compton, Kyle) (Entered: 08/31/2007)
08/31/2007	511	SEALED MOTION in Limine - *Letter Brief* - filed by Power Integrations, Inc.. (Marsden, William) (Entered: 08/31/2007)

08/31/2007	512	SEALED DECLARATION re 511 SEALED MOTION in Limine - *Letter Brief of William J. Marsden, Jr.* by Power Integrations, Inc.. (Marsden, William) (Entered: 08/31/2007)
08/31/2007	513	SEALED MOTION in Limine *NOS. 1-5 Regarding the Invalidity Trial* - filed by Fairchild Semiconductor International, Inc., Fairchild Semiconductor Corporation. (Lydon, Tiffany) (Entered: 08/31/2007)
09/04/2007	514	Letter to The Honorable Joseph J. Farnan, Jr. from John G. Day regarding the Federal Circuit's recent decision In re Seagate Technology, LLC. (Attachments: # 1 Exhibit 1)(Day, John) (Entered: 09/04/2007)
09/05/2007	515	NOTICE of Prior Art Pursuant to 35 U.S.C. Section 282 by Fairchild Semiconductor International, Inc., Fairchild Semiconductor Corporation (Day, John) (Entered: 09/05/2007)
09/05/2007	516	Letter to The Honorable Joseph J. Farnan, Jr. from William J. Marsden, Jr. regarding Fairchild's September 4 letter re Seagate opinion - re 514 Letter. (Attachments: # Exhibit A-E)(Marsden, William) Additional attachment(s) added on 9/6/2007 (lec,). (Entered: 09/05/2007)
09/06/2007		CORRECTING ENTRY: Exchanged Exhibits of D.I. 516 with corrected version which changed exhibit C (per atty request). (lec) (Entered: 09/06/2007)
09/06/2007	517	Letter to Counsel from the Court regarding the impact of the Federal Circuit's recent decision re Seagate - re 514 Letter, 516 Letter,. (lec) (Entered: 09/06/2007)
09/06/2007	518	Proposed Pretrial Order by Power Integrations, Inc., Fairchild Semiconductor International, Inc., Fairchild Semiconductor Corporation. (Attachments: # 1 Exhibit 1# 2 Exhibit 2# 3 Exhibit 3A and 3B# 4 Exhibit 4# 5 Exhibit 5# 6 Exhibit 6# 7 Exhibit 7# 8 Exhibit 8# 9 Exhibit 9# 10 Exhibit 10# 11 Exhibit 12, 12A and 12B# 12 Exhibit 13, 13A and 13B# 13 Exhibit 14# 14 Exhibit 15# 15 Exhibit 16# 16 Exhibit 17)(Marsden, William) (Entered: 09/06/2007)
09/07/2007	519	Proposed Voir Dire by Power Integrations, Inc.. (Marsden, William) (Entered: 09/07/2007)
09/07/2007	520	VERDICT SHEET by Power Integrations, Inc. *Proposed - Validity Trial*. (Marsden, William) (Entered: 09/07/2007)
09/07/2007	521	SEALED ANSWERING BRIEF in Opposition re 513 SEALED MOTION in Limine *NOS. 1-5 Regarding the Invalidity Trial* filed by Power Integrations, Inc..Reply Brief due date per Local Rules is 9/17/2007. (Marsden, William) (Entered: 09/07/2007)
09/07/2007	522	SEALED DECLARATION re 521 Answering Brief in Opposition *of*

		William J. Marsden with Exhibits A-E by Power Integrations, Inc.. (Marsden, William) (Entered: 09/07/2007)
09/07/2007	523	Proposed Jury Instructions by Power Integrations, Inc.. (Marsden, William) (Entered: 09/07/2007)
09/07/2007	524	Proposed Jury Instructions by Fairchild Semiconductor International, Inc., Fairchild Semiconductor Corporation. (Balick, Steven) (Entered: 09/07/2007)
09/07/2007	525	Proposed Voir Dire by Fairchild Semiconductor International, Inc., Fairchild Semiconductor Corporation. (Balick, Steven) (Entered: 09/07/2007)
09/07/2007	526	VERDICT SHEET by Fairchild Semiconductor International, Inc., Fairchild Semiconductor Corporation. (Balick, Steven) (Entered: 09/07/2007)
09/07/2007	527	SEALED ANSWERING BRIEF in Opposition re 511 SEALED MOTION in Limine - *Letter Brief* filed by Fairchild Semiconductor International, Inc., Fairchild Semiconductor Corporation.Reply Brief due date per Local Rules is 9/17/2007. (Balick, Steven) (Entered: 09/07/2007)
09/07/2007	528	SEALED ANSWERING BRIEF in Opposition re 509 SEALED MOTION to Preclude *Admission of Certain Evidence Related to Fairchild's Forensic Testing* filed by Fairchild Semiconductor International, Inc., Fairchild Semiconductor Corporation.Reply Brief due date per Local Rules is 9/17/2007. (Balick, Steven) (Entered: 09/07/2007)
09/10/2007	529	REDACTED VERSION of 511 SEALED MOTION in Limine - *Letter Brief* by Power Integrations, Inc.. (Marsden, William) (Entered: 09/10/2007)
09/10/2007	530	REDACTED VERSION of 512 Declaration *of William Marsden In Support of Power Integration's Motions in Limine* by Power Integrations, Inc.. (Attachments: # 1 Exhibit A&B)(Marsden, William) (Entered: 09/10/2007)
09/10/2007	531	REDACTED VERSION of 509 SEALED MOTION to Preclude *Admission of Certain Evidence Related to Fairchild's Forensic Testing* by Power Integrations, Inc.. (Compton, Kyle) (Entered: 09/10/2007)
09/10/2007	532	REDACTED VERSION of 510 Declaration *of Kyle Wagner Compton In Support of Application to Exclude the Admission of Forensic Testing* by Power Integrations, Inc.. (Attachments: # 1 Exhibit 1 to 6)(Compton, Kyle) (Entered: 09/10/2007)
09/11/2007		ORAL ORDER: The Pretrial Conference scheduled September 12,

		2007 at 1:30 p.m. will be held at 4:30 p.m. (Time change only). Ordered by Judge Joseph J. Farnan, Jr. on 09/11/2007. (dlk) (Entered: 09/11/2007)
09/11/2007	533	REDACTED VERSION of 513 SEALED MOTION in Limine *NOS. 1-5 Regarding the Invalidity Trial* by Fairchild Semiconductor International, Inc., Fairchild Semiconductor Corporation. (Maguire, Lauren) (Entered: 09/11/2007)
09/11/2007	534	Letter to Ms. Deborah Krett from William J. Marsden, Jr. regarding Request for Permission to Have Laptop Computer In Courtroom 4B. (Attachments: # 1 Text of Proposed Order)(Marsden, William) (Entered: 09/11/2007)
09/11/2007	535	Exhibit List by Power Integrations, Inc.. (Marsden, William) (Entered: 09/11/2007)
09/12/2007	536	Exhibit List by Fairchild Semiconductor International, Inc., Fairchild Semiconductor Corporation. (Maguire, Lauren) (Entered: 09/12/2007)
09/12/2007	537	Letter to Ms. Deborah Krett from Lauren E. Maguire regarding request for permission to use laptops in Courtroom 4B. (Maguire, Lauren) (Entered: 09/12/2007)
09/12/2007		Minute Entry for proceedings held before Judge Joseph J. Farnan, Jr. : Final Pretrial Conference held on 9/12/2007. D.I. 479 DENIED as Moot(renewed as D.I. 511); #1 of D.I. 511 is GRANTED IN PART and DENIED IN PART; #3 of D.I. 511 is DENIED; Jury Trial schedule was discussed. Inequitable Conduct will be tried to the bench commencing 9/21/2007 at 1:30 p.m.; Counsel shall file email letters by 9/14/2007 re Jury Instruction and KSR case. Court will issue order re D.I. 478 and 513 . (Court Reporter Dale Hawkins.) (lec) (Entered: 09/15/2007)
09/13/2007	538	TRANSCRIPT of Pretrial Conference held on 9/12/2007 before Judge Joseph J. Farnan, Jr. Court Reporter: Dale C. Hawkins. (Transcript on file in Clerk's Office) (lec) (Entered: 09/13/2007)
09/14/2007		CORRECTING ENTRY: Removed "Sealed" Trial Exhibit List from D.I. 356 and added an Unsealed List (per atty request). (lec) (Entered: 09/14/2007)
09/14/2007		CORRECTING ENTRY: Disregard Administrative Closing -- Entry was made error (dlk) (Entered: 09/14/2007)
09/14/2007	539	REDACTED VERSION of 527 Answering Brief in Opposition by Fairchild Semiconductor International, Inc., Fairchild Semiconductor Corporation. (Attachments: # 1 Exhibit 1# 2 Exhibit 2# 3 Exhibit 3# 4 Exhibit 4# 5 Exhibit 5# 6 Exhibit 6# 7 Exhibit 7# 8 Exhibit 8# 9

		Exhibit 9# 10 Exhibit 10# 11 Exhibit 11)(Maguire, Lauren) (Entered: 09/14/2007)
09/14/2007	540	Letter to Honorable Joseph J. Farnan from William J. Marsden, Jr. regarding Preliminary Jury Instructions. (Marsden, William) (Entered: 09/14/2007)
09/14/2007	541	ORDER granting in part and denying in part D.I. 478 Motion in Limine; denying D.I. 509 Motion to Preclude; granting in part and denying in part D.I. 511 Motion in Limine; and granting in part and denying in part D.I. 513 Motion in Limine. (SEE MEMORANDUM ORDER FOR DETAILS) Signed by Judge Joseph J. Farnan, Jr. on 09/14/2007. (dlk) (Entered: 09/14/2007)
09/14/2007	542	Letter to The Honorable Joseph J. Farnan, Jr. from Lauren E. Maguire regarding jury instructions. (Maguire, Lauren) (Entered: 09/14/2007)
09/14/2007	543	REDACTED VERSION of 528 Answering Brief in Opposition, by Fairchild Semiconductor International, Inc., Fairchild Semiconductor Corporation. (Attachments: # 1 Exhibit 1-10# 2 Exhibit 11 part I# 3 Exhibit 11 part II# 4 Exhibit 12-22)(Maguire, Lauren) (Entered: 09/14/2007)
09/16/2007	544	Letter to Ms. Deborah Krett from William J. Marsden, Jr. regarding Revised request for permission to have Laptop in Courtroom 4B. (Attachments: # 1 Text of Proposed Order Revised Order for Laptop Usage)(Marsden, William) (Entered: 09/16/2007)
09/17/2007	545	AMENDED DOCUMENT by Fairchild Semiconductor International, Inc., Fairchild Semiconductor Corporation. Amendment to 536 Exhibit List. (Maguire, Lauren) (Entered: 09/17/2007)
09/17/2007	546	SECOND AMENDED DOCUMENT by Fairchild Semiconductor International, Inc., Fairchild Semiconductor Corporation. Amendment to 545 Amended Document, 536 Exhibit List. (Maguire, Lauren) (Entered: 09/17/2007)
09/17/2007		Minute Entry for proceedings held before Judge Joseph J. Farnan, Jr. : Jury Trial begun on 9/17/2007. (Court Reporter Dale Hawkins and Heather Triozzi.) (lec) (Entered: 09/17/2007)
09/17/2007	547	ORDER re 537 Letter permitting G.Hopkins Guy, III, Esq.; Vickie L. Feeman, Esq.; Bas de Blank, Esq.; Brian H. VanderZanden, Esq.; Gabriel M. Ramsey, Esq.; William L. Anthony, Esq.; Jim Tablerion; Ken Fung; and Eric Ang to bring laptop computers into Courtroom 4B for proceedings commencing on 9/17/2007. Signed by Judge Joseph J. Farnan, Jr. on 9/17/2007. (lec) (Entered: 09/18/2007)
09/17/2007	548	ORDER re 544 Letter, permitting the following attorneys and staff to

		bring laptops into Courtroom 4B for proceedings commencing on 9/17/2007: Michael J. Headley; Frank Scherkenback; Howard Pollack; Tamara Fraizer; William J. Marsden, Jr., Jonathan Lamberson; Judith Stewart; Kerry Smith; Tara Conway; Adriano Ferreira. Signed by Judge Joseph J. Farnan, Jr. on 9/17/2007. (lec) (Entered: 09/18/2007)
09/18/2007	549	Letter to The Honorable Joseph J. Farnan, Jr. from Lauren E. Maguire regarding jury instructions. (Maguire, Lauren) (Entered: 09/18/2007)
09/18/2007		Minute Entry for proceedings held before Judge Joseph J. Farnan, Jr. : Jury Trial held on 9/18/2007. (Court Reporter Dale Hawkins and Heather Triozzi.) (lec) (Entered: 09/19/2007)
09/19/2007	550	Proposed Jury Instructions by Power Integrations, Inc., Fairchild Semiconductor Corporation. (Marsden, William) (Entered: 09/19/2007)
09/19/2007	551	Letter to Honorable Joseph J. Farnan from William J. Marsden, Jr. regarding KSR Opinion and Jury Instructions. (Marsden, William) (Entered: 09/19/2007)
09/19/2007		Minute Entry for proceedings held before Judge Joseph J. Farnan, Jr. : Jury Trial held on 9/19/2007. (Court Reporter Dale Hawkins and Heather Triozzi.) (lec) (Entered: 09/20/2007)
09/19/2007		Minute Entry for proceedings held before Judge Joseph J. Farnan, Jr. : Jury Trial held on 9/19/2007. (Court Reporter Dale Hawkins and Heather Triozzi.) (lec) (Entered: 09/24/2007)
09/20/2007	552	VERDICT SHEET by Power Integrations, Inc. *Revised Proposed Special Verdict*. (Marsden, William) (Entered: 09/20/2007)
09/20/2007	553	MEMORANDUM ORDER that the Court will offier no instruction on infringement. Signed by Judge Joseph J. Farnan, Jr. on 9/20/2007. (lec) (Entered: 09/24/2007)
09/20/2007		Minute Entry for proceedings held before Judge Joseph J. Farnan, Jr. : Jury Trial held on 9/20/2007. (Court Reporter Dale Hawkins and Heather Triozzi.) (lec) (Entered: 09/24/2007)
09/21/2007		Minute Entry for proceedings held before Judge Joseph J. Farnan, Jr. : Jury Trial completed on 9/21/2007. (Court Reporter Dale Hawkins and Heather Triozzi.) (lec) (Entered: 09/24/2007)
09/21/2007	555	JURY VERDICT for Jury Trial commencing on September 17, 2007 and ending on September 21, 2007. (lec) (Entered: 09/24/2007)
09/21/2007		Minute Entry for proceedings held before Judge Joseph J. Farnan, Jr. : Bench Trial re Inequitable Conduct held on 9/21/2007. (Court Reporter Heather Triozzi and Dale Hawkins.) (lec) (Entered: 09/26/2007)

09/21/2007	562	Jury Instructions - Validity Trial. (lec) (Entered: 09/26/2007)
09/24/2007	554	WITNESS AND EXHIBIT LIST for Jury Trial commencing on September 17, 2007 and ending on September 21, 2007. (lec) (Entered: 09/24/2007)
09/24/2007		Minute Entry for proceedings held before Judge Joseph J. Farnan, Jr. : Bench Trial re Inequitable Conduct completed on 9/24/2007. (Court Reporter Heather Triozzi and Dale Hawkins.) (lec) (Entered: 09/26/2007)
09/25/2007	556	TRANSCRIPT Vol. II of Jury Trial held on 9/18/2007 before Judge Joseph J. Farnan, Jr. Court Reporter: Dale Hawkins and Heather Triozzi. (Transcript on file in Clerk's Office) (lec) (Entered: 09/25/2007)
09/25/2007	557	TRANSCRIPT Vol. III of Jury Trial held on 9/19/2007 before Judge Joseph J. Farnan, Jr. Court Reporter: Dale Hawkins and Heather Triozzi. (Transcript on file in Clerk's Office) (lec) (Entered: 09/25/2007)
09/25/2007	558	TRANSCRIPT Vol. IV of Jury Trial held on 9/20/2007 before Judge Joseph J. Farnan, Jr. Court Reporter: Dale Hawkins and Heather Triozzi. (Transcript on file in Clerk's Office) (lec) (Entered: 09/25/2007)
09/25/2007	559	TRANSCRIPT Vol. V of Jury Trial held on 9/ 21/ 2007 before Judge Joseph J. Farnan, Jr. Court Reporter: Dale Hawkins and Heather Triozzi. (Transcript on file in Clerk's Office) (lec) (Entered: 09/25/2007)
09/25/2007	560	TRANSCRIPT Vol. I of Inequitable Conduct Trial held on 9/21/2007 before Judge Joseph J. Farnan, Jr. Court Reporter: Dale Hawkins. (Transcript on file in Clerk's Office) (lec) (Entered: 09/25/2007)
09/25/2007	561	TRANSCRIPT Vol. II of Inequitable Conduct Trial held on 9/24/2007 before Judge Joseph J. Farnan, Jr. Court Reporter: Heather M. Triozzi. (Transcript on file in Clerk's Office) (lec) (Entered: 09/25/2007)
09/26/2007	563	ORDER directing that jurors be provided lunch (cc: Finance). Signed by Judge Joseph J. Farnan, Jr. on 9/26/2007. (lec) (Entered: 09/27/2007)
10/17/2007	564	MOTION for Permanent Injunction *(Post-trial)* - filed by Power Integrations, Inc.. (Attachments: # 1 Text of Proposed Order)(Marsden, William) (Entered: 10/17/2007)
10/17/2007	565	SEALED OPENING BRIEF in Support re 564 MOTION for Permanent Injunction *(Post-trial)* filed by Power Integrations, Inc..Answering Brief/Response due date per Local Rules is 11/5/2007.

		(Marsden, William) (Entered: 10/17/2007)
10/17/2007	566	SEALED DECLARATION re 564 MOTION for Permanent Injunction *(Post-trial) of William J. Marsden, Jr.* by Power Integrations, Inc.. (Marsden, William) (Entered: 10/17/2007)
10/17/2007	567	SEALED DECLARATION re 564 MOTION for Permanent Injunction *(Post-trial) Bruce Renouard* by Power Integrations, Inc.. (Marsden, William) (Entered: 10/17/2007)
10/17/2007	568	DECLARATION re 564 MOTION for Permanent Injunction *(Post-trial) Bob Blauschild* by Power Integrations, Inc.. (Marsden, William) (Entered: 10/17/2007)
10/17/2007	569	Letter to Honorable Joseph J. Farnan from William J. Marsden, Jr. regarding Post-trial briefing. (Marsden, William) (Entered: 10/17/2007)
10/22/2007	570	Post-Trial Motion for An Accounting - filed by Power Integrations, Inc.. (Attachments: # 1 Text of Proposed Order)(Compton, Kyle) Modified on 10/23/2007 (dab,). (Entered: 10/22/2007)
10/22/2007	571	SEALED OPENING BRIEF in Support re 570 MOTION Post-Trial Motion for An Accounting filed by Power Integrations, Inc..Answering Brief/Response due date per Local Rules is 11/8/2007. (Compton, Kyle) (Entered: 10/22/2007)
10/22/2007	572	SEALED DECLARATION re 571 Opening Brief in Support *of Post-trial Motion for An Accounting* by Power Integrations, Inc.. (Compton, Kyle) (Entered: 10/22/2007)
10/24/2007	573	MOTION Motion for Entry of Judgment of No Inequitable conduct re US Patent No 6,249,876 - filed by Power Integrations, Inc.. (Attachments: # 1 Text of Proposed Order)(Compton, Kyle) (Entered: 10/24/2007)
10/24/2007	574	SEALED OPENING BRIEF in Support re 573 MOTION Motion for Entry of Judgment of No Inequitable conduct re US Patent No 6,249,876 filed by Power Integrations, Inc..Answering Brief/Response due date per Local Rules is 11/13/2007. (Compton, Kyle) (Entered: 10/24/2007)
10/24/2007	575	SEALED DECLARATION re 574 Opening Brief in Support *of Kyle Wagner Compton In support of Motion for Entry of Judgment of No Inequitable Conduct re US Patent No. 6,249,876* by Power Integrations, Inc.. (Compton, Kyle) (Entered: 10/24/2007)
10/25/2007	576	Letter to Deborah Krett from Kyle Wagner Compton regarding corrected Table of Authorities for D.I. 565. (Compton, Kyle) (Entered: 10/25/2007)

10/26/2007	577	REDACTED VERSION of 574 Opening Brief in Support *Motion for Entry of Judgment of No Inequitable Conduct re US Patent No 6,249,876* by Power Integrations, Inc.. (Compton, Kyle) (Entered: 10/26/2007)
10/26/2007	578	REDACTED VERSION of 571 Opening Brief in Support *of Post-trial Motion for an Accounting* by Power Integrations, Inc.. (Compton, Kyle) (Entered: 10/26/2007)
10/26/2007	579	REDACTED VERSION of 565 Opening Brief in Support *of Post-trial Motion for Entry of A Permanent Injunction* by Power Integrations, Inc.. (Marsden, William) (Entered: 10/26/2007)
10/26/2007	580	REDACTED VERSION of 567 Declaration *of Bruce Renouard* by Power Integrations, Inc.. (Attachments: # 1 Exhibit A & B)(Marsden, William) (Entered: 10/26/2007)
10/26/2007	581	REDACTED VERSION of 566 Declaration *of Marsden In support of Post Trial Motion for Entry of Permanent Injunction* by Power Integrations, Inc.. (Attachments: # 1 Exhibit A-D# 2 Exhibit E-G# 3 Exhibit H# 4 Exhibit I part 1# 5 Exhibit I part 2# 6 Exhibit I part 3)(Marsden, William) (Entered: 10/26/2007)
10/26/2007	582	REDACTED VERSION of 575 Declaration *of Compton In Support of Motion for Entry of Judgment of No Inequitable Conduct re 876* by Power Integrations, Inc.. (Attachments: # 1 Exhibit 1-8)(Compton, Kyle) (Entered: 10/26/2007)
10/26/2007	583	REDACTED VERSION of 572 Declaration *of Compton In support of Post-trial Motion for an Accounting* by Power Integrations, Inc.. (Attachments: # 1 Exhibit 1-7)(Compton, Kyle) (Entered: 10/26/2007)
10/30/2007	584	STIPULATION Stipulated Schedule for Post-trial Submissions by Power Integrations, Inc.. (Marsden, William) (Entered: 10/30/2007)
10/31/2007		SO ORDERED, re 584 Stipulation Regarding Schedule for Post-Trial Submissions. Signed by Judge Joseph J. Farnan, Jr. on 10/31/07. (rwc) (Entered: 11/01/2007)
11/05/2007	585	SEALED POST TRIAL BRIEF *Defendants Fairchild Semiconductor International, Inc. and Fairchild Semiconductor Corporation's Opening Post-Trial Brief in Support of Their Assertion that the Patents-In-Suit are Unenforceable Due to Inequitable Conduct* by Fairchild Semiconductor International, Inc., Fairchild Semiconductor Corporation. (Balick, Steven) Modified on 11/6/2007 (dab,). (Entered: 11/05/2007)
11/05/2007	586	SEALED Proposed Findings of Fact by Fairchild Semiconductor International, Inc., Fairchild Semiconductor Corporation. (Balick,

		Steven) Modified on 11/6/2007 (dab,). (Entered: 11/05/2007)
11/05/2007	587	SEALED APPENDIX re 585 POST Trial Brief, 586 Proposed Findings of Fact *Combined Appendix to Defendants': (i) Opening Post-Trial Brief in Support of Their Assertion that the Patents-In-Suit are Unenforceable Due to Inequitable Conduct; and (ii) Proposed Findings of Fact and Conclusions of Law Regarding the Unenforceability of the Patents-In-Suit Due to Inequitable Conduct (Volume I of V)* by Fairchild Semiconductor International, Inc., Fairchild Semiconductor Corporation. (Balick, Steven) (Entered: 11/05/2007)
11/05/2007	588	SEALED APPENDIX re 585 POST Trial Brief, 586 Proposed Findings of Fact *Combined Appendix to Defendants': (i) Opening Post-Trial Brief in Support of Their Assertion that the Patents-In-Suit are Unenforceable Due to Inequitable Conduct; and (ii) Proposed Findings of Fact and Conclusions of Law Regarding the Unenforceability of the Patents-In-Suit Due to Inequitable Conduct (Volume II of V)* by Fairchild Semiconductor International, Inc., Fairchild Semiconductor Corporation. (Balick, Steven) (Entered: 11/05/2007)
11/05/2007	589	SEALED APPENDIX re 585 POST Trial Brief, 586 Proposed Findings of Fact *Combined Appendix to Defendants': (i) Opening Post-Trial Brief in Support of Their Assertion that the Patents-In-Suit are Unenforceable Due to Inequitable Conduct; and (ii) Proposed Findings of Fact and Conclusions of Law Regarding the Unenforceability of the Patents-In-Suit Due to Inequitable Conduct (Volume III of V)* by Fairchild Semiconductor International, Inc., Fairchild Semiconductor Corporation. (Balick, Steven) (Entered: 11/05/2007)
11/05/2007	590	SEALED APPENDIX re 585 POST Trial Brief, 586 Proposed Findings of Fact *[Combined Appendix to Defendants': (i) Opening Post-Trial Brief in Support of Their Assertion that the Patents-In-Suit are Unenforceable Due to Inequitable Conduct; and (ii) Proposed Findings of Fact and Conclusions of Law Regarding the Unenforceability of the Patents-In-Suit Due to Inequitable Conduct (Volume IV of V)]* by Fairchild Semiconductor International, Inc., Fairchild Semiconductor Corporation. (Balick, Steven) (Entered: 11/05/2007)
11/05/2007	591	SEALED APPENDIX re 585 POST Trial Brief, 586 Proposed Findings of Fact *[Combined Appendix to Defendants': (i) Opening Post-Trial Brief in Support of Their Assertion that the Patents-In-Suit are Unenforceable Due to Inequitable Conduct; and (ii) Proposed Findings of Fact and Conclusions of Law Regarding the*

		Unenforceability of the Patents-In-Suit Due to Inequitable Conduct (Volume V of V)] by Fairchild Semiconductor International, Inc., Fairchild Semiconductor Corporation. (Balick, Steven) (Entered: 11/05/2007)
11/06/2007		CORRECTING ENTRY: Indicated that DI #586 is SEALED (dab) (Entered: 11/06/2007)
11/08/2007	592	NOTICE of Motion by Fairchild Semiconductor International, Inc., Fairchild Semiconductor Corporation (Lydon, Tiffany) Additional attachment(s) added on 11/9/2007 (rwc,). (Entered: 11/08/2007)
11/08/2007	593	MOTION to Strike *the Declarations Accompanying Power Integrations' Motion for a Permanent Injunction* - filed by Fairchild Semiconductor International, Inc., Fairchild Semiconductor Corporation. (Attachments: # 1 Exhibit A-B)(Lydon, Tiffany) Additional attachment(s) added on 11/9/2007 (rwc,). (Entered: 11/08/2007)
11/09/2007		CORRECTING ENTRY: The Clerk's Office removed the Proposed Order from DI# 592 and attached it to DI# 593 per request of filer. (rwc) (Entered: 11/09/2007)
11/13/2007	594	REDACTED VERSION of 586 Proposed Findings of Fact by Fairchild Semiconductor International, Inc., Fairchild Semiconductor Corporation. (Attachments: # 1 part 2)(Maguire, Lauren) (Entered: 11/13/2007)
11/13/2007	595	REDACTED VERSION of 587 Appendix,, *Volume 1 of 5* by Fairchild Semiconductor International, Inc., Fairchild Semiconductor Corporation. (Attachments: # 1 part 2# 2 part 3# 3 part 4# 4 part 5# 5 part 6# 6 part 7)(Maguire, Lauren) (Entered: 11/13/2007)
11/13/2007	596	REDACTED VERSION of 588 Appendix,, *Volume 2 of 5* by Fairchild Semiconductor International, Inc., Fairchild Semiconductor Corporation. (Attachments: # 1 part 2# 2 part 3# 3 part 4)(Maguire, Lauren) (Entered: 11/13/2007)
11/13/2007	597	REDACTED VERSION of 589 Appendix,, *Volume 3 of 5* by Fairchild Semiconductor International, Inc., Fairchild Semiconductor Corporation. (Attachments: # 1 part 2# 2 part 3)(Maguire, Lauren) (Entered: 11/13/2007)
11/13/2007	598	REDACTED VERSION of 590 Appendix,, *Volume 4 of 5* by Fairchild Semiconductor International, Inc., Fairchild Semiconductor Corporation. (Attachments: # 1 part 2# 2 part 3# 3 part 4)(Maguire, Lauren) (Entered: 11/13/2007)
11/13/2007	599	REDACTED VERSION of 591 Appendix,, *Volume 5 of 5* by Fairchild

		Semiconductor International, Inc., Fairchild Semiconductor Corporation. (Maguire, Lauren) (Entered: 11/13/2007)
11/13/2007	600	REDACTED VERSION of 585 POST Trial Brief, by Fairchild Semiconductor International, Inc., Fairchild Semiconductor Corporation. (Maguire, Lauren) (Entered: 11/13/2007)
11/20/2007	601	STIPULATION Amending Schedule for Post-Trial Submissions by Power Integrations, Inc., Fairchild Semiconductor International, Inc., Fairchild Semiconductor Corporation. (Maguire, Lauren) (Entered: 11/20/2007)
11/27/2007		SO ORDERED - re 601 Stipulation Amending Schedule for Post-Trial Submissions. Signed by Judge Joseph J. Farnan, Jr. on 11/27/07. (rwc) (Entered: 11/27/2007)
11/27/2007	602	ANSWERING BRIEF in Opposition re 593 MOTION to Strike *the Declarations Accompanying Power Integrations' Motion for a Permanent Injunction* filed by Power Integrations, Inc..Reply Brief due date per Local Rules is 12/7/2007. (Marsden, William) (Entered: 11/27/2007)
11/28/2007	603	SEALED ANSWERING BRIEF in Opposition re 573 MOTION Motion for Entry of Judgment of No Inequitable conduct re US Patent No 6,249,876 filed by Power Integrations, Inc..Reply Brief due date per Local Rules is 12/10/2007. (Marsden, William) (Entered: 11/28/2007)
11/28/2007	604	SEALED DECLARATION re 603 Answering Brief in Opposition *of William J. Marsden In Opposition to Fairchild's Post-trial Brief Asserting Inequitable Conduct* by Power Integrations, Inc.. (Marsden, William) (Entered: 11/28/2007)
11/28/2007	605	SEALED Proposed Findings of Fact by Power Integrations, Inc.. (Marsden, William) Modified on 11/29/2007 (bkb,). (Entered: 11/28/2007)
11/29/2007		CORRECTING ENTRY: Docket text for DI 605 edited to read "SEALED". (bkb) (Entered: 11/29/2007)
11/30/2007	606	REPLY BRIEF re 593 MOTION to Strike *the Declarations Accompanying Power Integrations' Motion for a Permanent Injunction* filed by Fairchild Semiconductor International, Inc., Fairchild Semiconductor Corporation. (Attachments: # 1 Exhibit A)(Day, John) (Entered: 11/30/2007)
12/03/2007	607	MOTION Pre-Judgment Interest - filed by Power Integrations, Inc.. (Compton, Kyle) (Entered: 12/03/2007)
12/03/2007	608	SEALED DECLARATION re 607 MOTION Pre-Judgment Interest *of*

		Richard Troxel by Power Integrations, Inc.. (Compton, Kyle) (Entered: 12/03/2007)
12/03/2007	609	PROPOSED ORDER Pre-Judgment Interest re 607 MOTION Pre-Judgment Interest by Power Integrations, Inc.. (Compton, Kyle) (Entered: 12/03/2007)
12/03/2007	610	MOTION for Attorney Fees *for a Declaration that this Case is Exceptional, Treble Damages and Attorneys Fees* - filed by Power Integrations, Inc.. (Attachments: # 1 Text of Proposed Order)(Compton, Kyle) (Entered: 12/03/2007)
12/03/2007	611	SEALED OPENING BRIEF in Support re 610 MOTION for Attorney Fees *for a Declaration that this Case is Exceptional, Treble Damages and Attorneys Fees* filed by Power Integrations, Inc..Answering Brief/Response due date per Local Rules is 12/20/2007. (Compton, Kyle) (Entered: 12/03/2007)
12/03/2007	612	SEALED DECLARATION re 611 Opening Brief in Support, *Motion for Declaration that this Case is Exceptional, Treble Damages, and Attorneys' Fees* by Power Integrations, Inc.. (Compton, Kyle) (Entered: 12/03/2007)
12/03/2007	613	SEALED MOTION for Judgment as a Matter of Law , *for Remitter, or, in the Alternative, New Trial Concerning Damages* - filed by Fairchild Semiconductor International, Inc., Fairchild Semiconductor Corporation. (Day, John) (Entered: 12/03/2007)
12/03/2007	614	MOTION for Judgment as a Matter of Law *Concerning Noninfringement and Invalidity of U.S. Patent No. 6,249,876* - filed by Fairchild Semiconductor International, Inc., Fairchild Semiconductor Corporation. (Attachments: # 1 Tab 1# 2 Tab 2# 3 Tab 3# 4 Tab 4# 5 Tab 5# 6 Tab 6)(Day, John) (Entered: 12/03/2007)
12/03/2007	615	MOTION for New Trial *on all Issues in Light of In Re Seagate and Inseparability of Willfulness, Infringement and Validity* - filed by Fairchild Semiconductor International, Inc., Fairchild Semiconductor Corporation. (Day, John) (Entered: 12/03/2007)
12/03/2007	616	SEALED MOTION for Judgment as a Matter of Law *or in the Alternative Motion for a New Trial Regarding Invalidity of U.S. Patent No. 4,811,075* - filed by Fairchild Semiconductor International, Inc., Fairchild Semiconductor Corporation. (Day, John) (Entered: 12/03/2007)
12/05/2007		ORAL ORDER that the Notice of Motion regarding D.I. 593 Motion to Strike is hereby STRICKEN. Without hearing, the motion will be decided on the papers submitted. Ordered by Judge Joseph J. Farnan, Jr. on 12/5/07. (dlk) (Entered: 12/05/2007)

12/07/2007	617	Letter to Deborah Krett from William J. Marsden, Jr. regarding corrected page in Dkt. 604 - re 604 Declaration. (Marsden, William) (Entered: 12/07/2007)
12/10/2007	618	REDACTED VERSION of 616 SEALED MOTION for Judgment as a Matter of Law *or in the Alternative Motion for a New Trial Regarding Invalidity of U.S. Patent No. 4,811,075* by Fairchild Semiconductor International, Inc., Fairchild Semiconductor Corporation. (Day, John) (Entered: 12/10/2007)
12/10/2007	619	REDACTED VERSION of 613 SEALED MOTION for Judgment as a Matter of Law *, for Remitter, or, in the Alternative, New Trial Concerning Damages* by Fairchild Semiconductor International, Inc., Fairchild Semiconductor Corporation. (Day, John) (Entered: 12/10/2007)
12/10/2007	620	REDACTED VERSION *of 603 Power Integrations Answering Brief In Opposition to Fairchild's Post-trial Brief Asserting Inequitable Conduct* by Power Integrations, Inc.. (Marsden, William) Modified on 12/11/2007 (dab,). (Entered: 12/10/2007)
12/10/2007	621	REDACTED VERSION of 605 Proposed Findings of Fact *and Conclusions of Law* by Power Integrations, Inc.. (Marsden, William) (Entered: 12/10/2007)
12/10/2007	622	REDACTED VERSION of 604 Declaration *of William J. Marsden, Jr.* by Power Integrations, Inc.. (Attachments: # 1 Exhibit)(Marsden, William) (Entered: 12/10/2007)
12/10/2007	623	REDACTED VERSION of 611 Opening Brief in Support, *Of A Declaration that this Case is Exceptional, Treble Damages, and Attorneys Fees* by Power Integrations, Inc.. (Compton, Kyle) (Entered: 12/10/2007)
12/10/2007	624	REDACTED VERSION of 612 Declaration *of Kyle Wagner Compton* by Power Integrations, Inc.. (Attachments: # 1 Exhibit A-D# 2 Exhibit E-N# 3 Exhibit O-T# 4 Exhibit U-BB)(Compton, Kyle) (Entered: 12/10/2007)
12/10/2007	625	REDACTED VERSION of 608 Declaration *of Richard Troxel regarding prejudgment Interest* by Power Integrations, Inc.. (Attachments: # 1 Exhibit A-C)(Compton, Kyle) (Entered: 12/10/2007)
12/11/2007		CORRECTING ENTRY: Added link to DI #620 (dab) (Entered: 12/11/2007)
12/12/2007	626	SEALED REPLY BRIEF *In Support of Their Assertion That the Patents-In-Suit are Unenforceable Due to Inequitable Conduct* filed by Fairchild Semiconductor International, Inc., Fairchild Semiconductor

		Corporation. (Maguire, Lauren) (Entered: 12/12/2007)
12/12/2007	627	OBJECTIONS by Fairchild Semiconductor International, Inc., Fairchild Semiconductor Corporation *to Power Integrations' Proposed Findings of Fact and Conclusions of Law (FILED UNDER SEAL).* (Maguire, Lauren) (Entered: 12/12/2007)
12/20/2007	628	REDACTED VERSION of 627 Objections by Fairchild Semiconductor International, Inc., Fairchild Semiconductor Corporation. (Day, John) (Entered: 12/20/2007)
12/20/2007	629	REDACTED VERSION of 626 Reply Brief by Fairchild Semiconductor International, Inc., Fairchild Semiconductor Corporation. (Day, John) (Entered: 12/20/2007)
12/21/2007	630	ANSWERING BRIEF in Opposition re 570 MOTION Post-Trial Motion for An Accounting filed by Fairchild Semiconductor International, Inc., Fairchild Semiconductor Corporation.Reply Brief due date per Local Rules is 1/7/2008. (Maguire, Lauren) (Entered: 12/21/2007)
12/21/2007	631	ANSWERING BRIEF in Opposition re 607 MOTION Pre-Judgment Interest filed by Fairchild Semiconductor International, Inc., Fairchild Semiconductor Corporation.Reply Brief due date per Local Rules is 1/7/2008. (Maguire, Lauren) (Entered: 12/21/2007)
12/21/2007	632	SEALED ANSWERING BRIEF in Opposition re 614 MOTION for Judgment as a Matter of Law *Concerning Noninfringement and Invalidity of U.S. Patent No. 6,249,876* filed by Power Integrations, Inc..Reply Brief due date per Local Rules is 1/7/2008. (Marsden, William) (Entered: 12/21/2007)
12/21/2007	633	SEALED DECLARATION re 632 Answering Brief in Opposition, *of William J. Marsden, Jr. In Support of Power Integration's Opposition to Fairchild's Motion for Judgment as a Matter of Law Concerning Noninfringement and Invalidity of U.S. Patent No. 6,249,876* by Power Integrations, Inc.. (Marsden, William) (Entered: 12/21/2007)
12/21/2007	634	SEALED ANSWERING BRIEF in Opposition re 616 SEALED MOTION for Judgment as a Matter of Law *or in the Alternative Motion for a New Trial Regarding Invalidity of U.S. Patent No. 4,811,075* filed by Power Integrations, Inc..Reply Brief due date per Local Rules is 1/7/2008. (Marsden, William) (Entered: 12/21/2007)
12/21/2007	635	SEALED DECLARATION re 634 Answering Brief in Opposition, *of William J. Marsden, Jr. In support of Power Integratons Opposition to Fairchild's Motion for Judgment as a Matter of Law or In the Alternative for a New trial regarding Invalidity of US Patent No. 4,811,075* by Power Integrations, Inc.. (Marsden, William) (Entered:

		12/21/2007)
12/21/2007	636	SEALED ANSWERING BRIEF in Opposition re 610 MOTION for Attorney Fees *for a Declaration that this Case is Exceptional, Treble Damages and Attorneys Fees* filed by Fairchild Semiconductor International, Inc., Fairchild Semiconductor Corporation.Reply Brief due date per Local Rules is 1/7/2008. (Maguire, Lauren) (Entered: 12/21/2007)
12/21/2007	637	SEALED APPENDIX re 636 Answering Brief in Opposition, *to Power Integrations' Brief in Support of its Motion for a Declaration that this Case is Exceptional, Treble Damages, and Attorneys' Fees* by Fairchild Semiconductor International, Inc., Fairchild Semiconductor Corporation. (Maguire, Lauren) (Entered: 12/21/2007)
12/21/2007	638	SEALED DECLARATION re 636 Answering Brief in Opposition, *of Vickie Feeman* by Fairchild Semiconductor International, Inc., Fairchild Semiconductor Corporation. (Maguire, Lauren) (Entered: 12/21/2007)
12/21/2007	639	SEALED DECLARATION re 636 Answering Brief in Opposition, *Bas de Blank* by Fairchild Semiconductor International, Inc., Fairchild Semiconductor Corporation. (Maguire, Lauren) (Entered: 12/21/2007)
12/21/2007	640	SEALED ANSWERING BRIEF in Opposition re 564 MOTION for Permanent Injunction *(Post-trial)* filed by Fairchild Semiconductor International, Inc., Fairchild Semiconductor Corporation.Reply Brief due date per Local Rules is 1/7/2008. (Maguire, Lauren) (Entered: 12/21/2007)
12/21/2007	641	SEALED DECLARATION re 636 Answering Brief in Opposition, 640 Answering Brief in Opposition, by Fairchild Semiconductor International, Inc., Fairchild Semiconductor Corporation. (Maguire, Lauren) (Entered: 12/21/2007)
12/21/2007	642	SEALED DECLARATION re 640 Answering Brief in Opposition, *Gu-Yeon Wei* by Fairchild Semiconductor International, Inc., Fairchild Semiconductor Corporation. (Maguire, Lauren) (Entered: 12/21/2007)
12/21/2007	643	SEALED DECLARATION re 640 Answering Brief in Opposition, *Hang-Seok Choi* by Fairchild Semiconductor International, Inc., Fairchild Semiconductor Corporation. (Maguire, Lauren) (Entered: 12/21/2007)
12/21/2007	644	ANSWERING BRIEF in Opposition re 615 MOTION for New Trial *on all Issues in Light of In Re Seagate and Inseparability of Willfulness, Infringement and Validity* filed by Power Integrations, Inc..Reply Brief due date per Local Rules is 1/7/2008. (Marsden, William) Additional attachment(s) added on 12/26/2007 (bkb,).

		(Entered: 12/21/2007)
12/22/2007	645	DECLARATION re 644 Answering Brief in Opposition, *of William Marsden* by Power Integrations, Inc.. (Attachments: # 1 Exhibit 1# 2 Exhibit 2)(Marsden, William) (Entered: 12/22/2007)
12/22/2007	646	SEALED ANSWERING BRIEF in Opposition re 613 SEALED MOTION for Judgment as a Matter of Law , *for Remitter, or, in the Alternative, New Trial Concerning Damages* filed by Power Integrations, Inc..Reply Brief due date per Local Rules is 1/7/2008. (Marsden, William) (Entered: 12/22/2007)
12/22/2007	647	SEALED DECLARATION re 646 Answering Brief in Opposition, *of William J. Marsden, Jr.* by Power Integrations, Inc.. (Marsden, William) (Entered: 12/22/2007)
12/26/2007		CORRECTING ENTRY: PDF originally attached to DI 644 was missing pages 12 to end of document; the originally filed PDF has been deleted and a corrected PDF substituted. (bkb) (Entered: 12/26/2007)
01/02/2008	648	REDACTED VERSION of 632 Answering Brief in Opposition, *of Fairchild's Motion for Judgment as a Matter of Law concerning Noninfringement and Invalidity of '876* by Power Integrations, Inc.. (Marsden, William) (Entered: 01/02/2008)
01/02/2008	649	REDACTED VERSION of 633 Declaration, *of William Marsden In Support of Power Integration's Opposition to Fairchild's Motion for Judgment as a Matter of Law concerning noninfringement and invalidity of '876* by Power Integrations, Inc.. (Attachments: # 1 Exhibit A-B)(Marsden, William) (Entered: 01/02/2008)
01/02/2008	650	REDACTED VERSION of 646 Answering Brief in Opposition, *to Fairchild's Motion for Remittitur, Judgment as a Matter of Law, or in the alternative, New Trial Concerning Damages* by Power Integrations, Inc.. (Marsden, William) (Entered: 01/02/2008)
01/02/2008	651	REDACTED VERSION of 647 Declaration *of William J. Marsden, Jr. In Support of Power Integrations Answering Brief In Opposition to Fairchild's Motion for Remittitur, Judgment as a Matter of Law, or in the alternative, New Trial Concerning Damages* by Power Integrations, Inc.. (Attachments: # 1 Exhibit A-D)(Marsden, William) (Entered: 01/02/2008)
01/02/2008	652	REDACTED VERSION of 634 Answering Brief in Opposition, *to Fairchild's Motion for Judgment as a Matter of Law or in the Alternative for a New Trial Regarding Invalidity of '075* by Power Integrations, Inc.. (Marsden, William) (Entered: 01/02/2008)
01/02/2008	653	REDACTED VERSION of 635 Declaration, *of William J. Marsden, Jr.*

		In Support of Power Integration's Opposition to Fairchild's Motion for Judgment as a Matter of Law or in the alternative, for a New Trial Regarding Invalidity of '075 by Power Integrations, Inc.. (Attachments: # 1 Exhibit A-H)(Marsden, William) (Entered: 01/02/2008)
01/03/2008	654	REDACTED VERSION of 640 Answering Brief in Opposition, by Fairchild Semiconductor International, Inc., Fairchild Semiconductor Corporation. (Attachments: # 1 Exhibit 1 through 5)(Maguire, Lauren) (Entered: 01/03/2008)
01/03/2008	655	REDACTED VERSION of 636 Answering Brief in Opposition, by Fairchild Semiconductor International, Inc., Fairchild Semiconductor Corporation. (Maguire, Lauren) (Entered: 01/03/2008)
01/03/2008	656	REDACTED VERSION of 637 Appendix, by Fairchild Semiconductor International, Inc., Fairchild Semiconductor Corporation. (Maguire, Lauren) (Entered: 01/03/2008)
01/03/2008	657	REDACTED VERSION of 639 Declaration *of Bas de Blank* by Fairchild Semiconductor International, Inc., Fairchild Semiconductor Corporation. (Maguire, Lauren) (Entered: 01/03/2008)
01/03/2008	658	REDACTED VERSION of 638 Declaration *of Vickie Feeman* by Fairchild Semiconductor International, Inc., Fairchild Semiconductor Corporation. (Maguire, Lauren) (Entered: 01/03/2008)
01/03/2008	659	REDACTED VERSION of 641 Declaration *of Robert Conrad* by Fairchild Semiconductor International, Inc., Fairchild Semiconductor Corporation. (Maguire, Lauren) (Entered: 01/03/2008)
01/03/2008	660	REDACTED VERSION of 642 Declaration *of Gu-Yeon Wei* by Fairchild Semiconductor International, Inc., Fairchild Semiconductor Corporation. (Maguire, Lauren) (Entered: 01/03/2008)
01/03/2008	661	REDACTED VERSION of 643 Declaration *of Hang-Seok Choi* by Fairchild Semiconductor International, Inc., Fairchild Semiconductor Corporation. (Maguire, Lauren) (Entered: 01/03/2008)
01/07/2008	662	Letter to Deborah Krett from Kyle Wagner Compton regarding Corrected Exhibit B to DI 635 - re 635 Declaration,. (Compton, Kyle) (Entered: 01/07/2008)
01/16/2008	663	SEALED REPLY BRIEF re 610 MOTION for Attorney Fees *for a Declaration that this Case is Exceptional, Treble Damages and Attorneys Fees* filed by Power Integrations, Inc.. (Compton, Kyle) (Entered: 01/16/2008)
01/16/2008	664	SEALED DECLARATION re 663 Reply Brief *of Kyle Wagner Compton* by Power Integrations, Inc.. (Compton, Kyle) (Entered: 01/16/2008)

01/16/2008	665	REPLY BRIEF re 607 MOTION Pre-Judgment Interest filed by Power Integrations, Inc.. (Compton, Kyle) (Entered: 01/16/2008)
01/16/2008	666	REPLY BRIEF re 570 MOTION Post-Trial Motion for An Accounting filed by Power Integrations, Inc.. (Attachments: # 1 Exhibit 1)(Compton, Kyle) (Entered: 01/16/2008)
01/16/2008	667	SEALED REPLY BRIEF re 564 MOTION for Permanent Injunction *(Post-trial)* filed by Power Integrations, Inc.. (Compton, Kyle) (Entered: 01/16/2008)
01/16/2008	668	DECLARATION re 667 Reply Brief *of Kyle Wagner Compton (replaces DI 668)* by Power Integrations, Inc.. (Attachments: # 1 Exhibit 1# 2 Exhibit 2# 3 Exhibit 3# 4 Exhibit 4# 5 Exhibit 5# 6 Exhibit 6# 7 Exhibit 7# 8 Exhibit 8)(Compton, Kyle) (Entered: 01/16/2008)
01/16/2008	669	SEALED REPLY BRIEF re 613 SEALED MOTION for Judgment as a Matter of Law *, for Remitter, or, in the Alternative, New Trial Concerning Damages* filed by Fairchild Semiconductor International, Inc., Fairchild Semiconductor Corporation. (Maguire, Lauren) (Entered: 01/16/2008)
01/16/2008	670	REPLY BRIEF re 614 MOTION for Judgment as a Matter of Law *Concerning Noninfringement and Invalidity of U.S. Patent No. 6,249,876* filed by Fairchild Semiconductor International, Inc., Fairchild Semiconductor Corporation. (Attachments: # 1 Exhibit 1-6)(Maguire, Lauren) (Entered: 01/16/2008)
01/16/2008	671	SEALED REPLY BRIEF re 616 SEALED MOTION for Judgment as a Matter of Law *or in the Alternative Motion for a New Trial Regarding Invalidity of U.S. Patent No. 4,811,075* filed by Fairchild Semiconductor International, Inc., Fairchild Semiconductor Corporation. (Maguire, Lauren) (Entered: 01/16/2008)
01/16/2008	672	REPLY BRIEF re 615 MOTION for New Trial *on all Issues in Light of In Re Seagate and Inseparability of Willfulness, Infringement and Validity* filed by Fairchild Semiconductor International, Inc., Fairchild Semiconductor Corporation. (Attachments: # 1 Exhibit A)(Maguire, Lauren) (Entered: 01/16/2008)
01/17/2008	673	PROPOSED ORDER (Amended) Granting Permanent Injunction by Power Integrations, Inc.. (Marsden, William) (Entered: 01/17/2008)
01/22/2008	674	Letter to The Honorable Joseph J. Farnan, Jr. from William J. Marsden, Jr. regarding post-trial briefing. (Marsden, William) (Entered: 01/22/2008)
01/24/2008	675	REDACTED VERSION of 669 Reply Brief, by Fairchild

		Semiconductor International, Inc., Fairchild Semiconductor Corporation. (Day, John) (Entered: 01/24/2008)
01/24/2008	676	REDACTED VERSION of 671 Reply Brief, by Fairchild Semiconductor International, Inc., Fairchild Semiconductor Corporation. (Day, John) (Entered: 01/24/2008)
01/29/2008	677	Letter to The Honorable Joseph J. Farnan, Jr. from William J. Marsden, Jr. [SEALED] regarding support - re 570 MOTION Post-Trial Motion for An Accounting, 564 MOTION for Permanent Injunction *(Post-trial)*. (Marsden, William) (Entered: 01/29/2008)
01/30/2008	678	REDACTED VERSION of 667 Reply Brief *Plaintiff Power Integration, Inc.'s Reply Brief in Support of Motion for Entry of a Permanent Injunction* by Power Integrations, Inc.. (Compton, Kyle) (Entered: 01/30/2008)
01/30/2008	679	REDACTED VERSION of 663 Reply Brief *Power Integrations' Reply Brief in Support Of Its Motion For a Declaration That This Case is Exceptional, Treble Damages, and Attorneys' Fees* by Power Integrations, Inc.. (Compton, Kyle) (Entered: 01/30/2008)
01/30/2008	680	REDACTED VERSION of 679 Redacted Document, 664 Declaration *Supplemental Declaration of Kyle Wagner Compton in Support of Power Integrations' Reply Brief in Support of Its Motion for a Declaration That This Case is Exceptional, Treble Damages, and Attorneys' Fees* by Power Integrations, Inc.. (Attachments: # 1 Exhibit CC)(Compton, Kyle) (Entered: 01/30/2008)
02/06/2008	681	Letter to The Honorable Joseph J. Farnan, Jr. from John G. Day regarding Power Integrations' January 29, 2008 Letter (FILED UNDER SEAL) - re 677 Letter. (Day, John) (Entered: 02/06/2008)
02/13/2008	682	REDACTED VERSION of 681 Letter by Fairchild Semiconductor International, Inc., Fairchild Semiconductor Corporation. (Maguire, Lauren) (Entered: 02/13/2008)

EXHIBIT K
(Memorandum and Order dated September 30, 1999 - Power Integrations, Inc. v. Motorola, Inc. - U.S. District Court - Delaware - Case No. 98-490)

156

IN THE UNITED STATES DISTRICT COURT
FOR THE DISTRICT OF DELAWARE

POWER INTEGRATIONS, INC., a Delaware corporation,	:	
Plaintiff,	:	
v.	:	Civil Action No. 98-490 JJF
MOTORLA, INC., a Delaware corporation,	:	
Defendant.	:	

MEMORANDUM ORDER

Plaintiff, Power Integrations, Inc. ("Power Integrations"), commenced this patent infringement action on August 19, 1998, alleging infringement of U.S. Patent Nos. 5,014,178 ("the '178 patent") and 5,313,381. Defendant, Motorola, Inc. ("Motorola"), denies infringement and has counterclaimed for declaratory relief and patent infringement (D.I. 14).

Presently before the Court is Power Integrations' motion to preliminarily enjoin Motorola from making, using, selling, offering to sell, or importing any high voltage power switching regulators that infringe any one or more of claims 1,4,5 or 6 of the '178 patent, including without limitation Motorola products MC33369, MC33370, MC33371, MC33372, and MC33374 (the "MC3337x products") (D.I. 40).[1] For the reasons stated below, the Court will deny Power Integrations' Motion For A Preliminary Injunction (D.I. 40).

---

[1] Although two patents are at issue in this litigation, the motion before the Court is directed only to the '178 patent.

I. Technology Background

The '178 patent relates to the start-up or initialization of an integrated voltage regulator (Tr. 8:25-9:1).[2] A voltage regulator "is a device that takes at its input ... variable voltage and produces at its output a constant voltage" that can be used by electrical appliances (Tr. 9:10-12). "Switched-mode" or "switching" voltage regulators work by sensing changes in voltage and "using this information as feedback to adjust the system to smooth out fluctuations in the voltage caused by load variation" (D.I. 63 at ¶ 10). Prior to Power Integrations' invention of the '178 patent, switching voltage regulators typically had two high voltage inputs: one high voltage pin connected to a high voltage switching transistor and a second high voltage pin connected to a "power-up" transistor. The '178 patent teaches that the power-up transistor and the switching transistor may be connected to a single high voltage input. Such a simplified design is considered advantageous because it may reduce cost, reduce the associated creepage distance required by high voltage pins, and provide the high voltage power-up transistor with a high level of protection against electrostatic discharge ('178 patent, col. 2, lines 4-9).

II. Discussion

---

[2] References are to the transcript of the hearing on Power Integrations' Motion For A Preliminary Injunction held on April 23, 1999.

A. Legal Standard Generally

Injunctive relief in patent cases is authorized by 35 U.S.C. § 283. The decision whether to grant or deny a preliminary injunction is within the sound discretion of the trial court. In determining whether a party is entitled to a preliminary injunction, a court must consider whether: (1) the movant is reasonably likely to succeed on the merits at trial; (2) the movant will suffer irreparable harm if preliminary relief is not granted; (3) the balance of hardships favors granting preliminary relief; and (4) the preliminary relief sought is in the public interest. New England Braiding Co. v. A.W. Chesterton Co., 970 F.2d 878, 882 (Fed. Cir. 1992); see also Eli Lilly and Co. v. Premo Pharmaceutical Laboratories, Inc., 630 F.2d 120, 136 (3d Cir. 1980).

B. Irreparable Harm

The Court will address only the second factor of the preliminary injucnction standard, as this is dispositive. The Court has concluded that an injunction is unavailable to Power Integrations because Power Integrations cannot demonstrate that it will suffer irreparable harm if preliminary relief is not granted.

Power Integrations asserts that at the time it filed suit against Motorola in August of 1998, Motorola was the only known infringer of the '178 patent, and Motorola's activities were

targeted only at selected customers outside of the United States (D.I. 44, at ¶ 14). Based on those circumstances, Power Integrations asserts that it was satisfied that a trial in October 1999 would be sufficient to protect its interests. On January 27, 1999, however, Motorola announced that it had entered a licensing agreement with TelCom Semiconductor, Inc. ("TelCom"), under which TelCom would begin selling the Motorola part in an infringing combination as early as the first or second quarter of 1999 (D.I. 44; Ex. G). Thus, Power Integrations asserts that the Court's failure to award injunctive relief will cause Power Integrations to suffer irreparable harm in the following ways: (1) TelCom's entry into the market will destroy Power Integrations' market share; (2) TelCom's lack of design experience and customer support expertise will irreparably damage Power Integrations' goodwill and force customers to turn to alternative technologies; and (3) any delay will allow TelCom to achieve "design ins" with its customers, which are difficult to regain once lost.

In response, Motorola argues that the following factors undermine Power Integrations' claim of irreparable harm: (1) Power Integrations delayed unreasonably in bringing this Motion; (2) Power Integrations fails to practice its own invention; (3) Power Integrations maintains its 90% market share in spite of Motorola's sale of the allegedly infringing MC3337x products; and

(4) Power Integrations' licensing of its technology demonstrates that money damages will be sufficient.

After considering the contentions of Power Integrations and Motorola, the Court concludes that Power Integrations "market / customer" arguments are insufficient at this juncture to persuade the Court that such harm cannot be compensated by money damages. In reaching this decision, the Court has concluded that Power Integrations' failure to practice the '178 patent as argued by Motorola is not determinative in this case because Power Integrations is a market participant; indeed its TopSwitch products enjoy 90% of the relevant market. However, as noted by Motorola, Power Integrations' ability to license the '178 technology is strong evidence that the remedy of money damages defeats Power Integrations' claim of irreparable harm.

III. Conclusion

For these reasons, the Court concludes that Power Integrations has not met its burden to establish that irreparable harm will result if a preliminary injunction is not issued, and therefore Power Integrations' Motion for a Preliminary Injunction will be denied.

NOW THEREFORE, IT IS HEREBY ORDERED this 30th day of September, 1999, that Power Integrations, Inc.'s Motion For A

Preliminary Injunction (D.I. 40) is **DENIED**.

UNITED STATES DISTRICT JUDGE

EXHIBIT L
(Docket Report - Power Integrations, Inc. v. Motorola, Inc. - U.S. District Court - Delaware - Case No. 98-490)

CLOSED, PATENT

I. U.S. District Court
District of Delaware (Wilmington)
CIVIL DOCKET FOR CASE #: 1:98-cv-00490-JJF

Power Integrations v. Motorola Inc.
Assigned to: Honorable Joseph J. Farnan, Jr.
Demand: $0
Related Case: 1:07-cv-00633-JJF
Cause: 35:271 Patent Infringement

Date Filed: 08/19/1998
Date Terminated: 03/27/2000
Jury Demand: Both
Nature of Suit: 830 Patent
Jurisdiction: Federal Question

Plaintiff

Power Integrations, Inc.
a Delaware corporation

represented by **William J. Marsden, Jr.**
Fish & Richardson, P.C.
919 N. Market Street, Suite 1100
P.O. Box 1114
Wilmington, DE 19899-1114
(302) 652-5070
Email: marsden@fr.com
LEAD ATTORNEY
ATTORNEY TO BE NOTICED

V.

Defendant

Motorola Inc.
a Delaware corporation

represented by **William J. Wade**
Richards, Layton & Finger
One Rodney Square
P.O. Box 551
Wilmington, DE 19899
(302) 651-7718
Email: wade@rlf.com
LEAD ATTORNEY
ATTORNEY TO BE NOTICED

Counter Claimant

Motorola Inc.

represented by **William J. Wade**
(See above for address)
LEAD ATTORNEY
ATTORNEY TO BE NOTICED

V.

Counter Defendant

Power Integrations, Inc. represented by **William J. Marsden, Jr.**
(See above for address)
LEAD ATTORNEY
ATTORNEY TO BE NOTICED

Counter Defendant

Motorola Inc. represented by **William J. Wade**
(See above for address)
LEAD ATTORNEY
ATTORNEY TO BE NOTICED

II. Date Filed	III. #	IV. Docket Text
08/19/1998	1	COMPLAINT filed; Mag consent notice to pltf. FILING FEE $ 150.00 RECEIPT # 122557 (dab) (Entered: 08/19/1998)
08/19/1998		DEMAND for jury trial by Power Integrations (dab) (Entered: 08/19/1998)
08/19/1998		SUMMONS(ES) issued for Motorola Inc. (dab) (Entered: 08/19/1998)
08/19/1998	2	Report to Commissioner of Patents and Trademarks. Exit original. (dab) (Entered: 08/19/1998)
08/19/1998	3	RETURN OF SERVICE executed as to Motorola Inc. 8/19/98 Answer due on 9/8/98 for Motorola Inc. (dab) (Entered: 08/19/1998)
08/26/1998	4	CASE assigned to Judge Joseph J. Farnan Jr. . Notice to all parties. (rjb) (Entered: 08/26/1998)
10/15/1998	5	STIPULATION with proposed order that the time for defendant to respond to the Complaint is extended to 10/20/98. (sm) (Entered: 10/16/1998)
10/15/1998	6	MOTION by Power Integrations with Proposed Order for Roger S. Borovoy, Esq. to Appear Pro Hac Vice re: [6-1] motion (sm) (Entered: 10/16/1998)
10/15/1998	7	MOTION by Power Integrations with Proposed Order for Kathi A. Kelly, Esq. to Appear Pro Hac Vice re: [7-1] motion (sm) (Entered:

		10/16/1998)
10/15/1998	8	MOTION by Power Integrations with Proposed Order for David M. Barkan, Esq. to Appear Pro Hac Vice re: [8-1] motion (sm) (Entered: 10/16/1998)
10/15/1998	9	MOTION by Power Integrations with Proposed Order for Frank E. Scherkenbach, Esq. to Appear Pro Hac Vice re: [9-1] motion (sm) (Entered: 10/16/1998)
10/15/1998	10	MOTION by Power Integrations with Proposed Order for Bao Q. Tran, Esq. to Appear Pro Hac Vice re: [10-1] motion (sm) (Entered: 10/16/1998)
10/19/1998		So Ordered GRANTING [5-1] stipulation reset Answer deadline to 10/20/98 for Motorola Inc. (signed by Judge Joseph J. Farnan Jr.) Notice to all parties. (sm) (Entered: 10/20/1998)
10/19/1998		So Ordered GRANTING [6-1] motion for Roger S. Borovoy, Esq. to Appear Pro Hac Vice, GRANTING [7-1] motion for Kathi A. Kelly, Esq. to Appear Pro Hac Vice, GRANTING [8-1] motion for David M. Barkan, Esq. to Appear Pro Hac Vice, GRANTING [9-1] motion for Frank E. Scherkenbach, Esq. to Appear Pro Hac Vice, GRANTING [10-1] motion for Bao Q. Tran, Esq. to Appear Pro Hac Vice (signed by Judge Joseph J. Farnan Jr.) Notice to all parties. (sm) (Entered: 10/20/1998)
10/20/1998	11	MOTION by Motorola Inc. with Proposed Order for David P. Enzminger, Esq. to Appear Pro Hac Vice re: [11-1] motion (sm) (Entered: 10/21/1998)
10/20/1998	12	MOTION by Motorola Inc. with Proposed Order for John J. Lulejian, Esq. to Appear Pro Hac Vice re: [12-1] motion (sm) (Entered: 10/21/1998)
10/20/1998	13	MOTION by Motorola Inc. with Proposed Order for Mark A. Samuels, Esq. to Appear Pro Hac Vice re: [13-1] motion (sm) (Entered: 10/21/1998)
10/20/1998	14	ANSWER to complaint and COUNTERCLAIM For Declaratory Relief and Patent Infringement by Motorola Inc. ; jury demand against Power Integrations (sm) (Entered: 10/21/1998)
10/22/1998		So Ordered GRANTING [11-1] motion for David P. Enzminger, Esq. to Appear Pro Hac Vice, GRANTING [12-1] motion for John J. Lulejian, Esq. to Appear Pro Hac Vice, GRANTING [13-1] motion for Mark A. Samuels, Esq. to Appear Pro Hac Vice (signed by Judge Joseph J. Farnan Jr.) Notice to all parties. (sm) (Entered: 10/22/1998)
11/09/1998	15	REPLY by Power Integrations to [14-2] counter claim (sm) (Entered:

		11/12/1998)
11/09/1998	15	COUNTERCLAIM by Power Integrations against Motorola Inc. (sm) (Entered: 11/12/1998)
11/10/1998	16	MOTION by Motorola Inc. with Proposed Order for Jonathan L. Pettit, Esq. to Appear Pro Hac Vice re: [16-1] motion (sm) (Entered: 11/12/1998)
11/17/1998		So Ordered GRANTING [16-1] motion for Jonathan L. Pettit, Esq. to Appear Pro Hac Vice (signed by Judge Joseph J. Farnan Jr.) Notice to all parties. (sm) (Entered: 11/19/1998)
11/17/1998	17	Letter to the Court dated 11/17/98 by William J. Marsden, Jr., Esq. RE: Enclosed proposed scheduling order. (sm) (Entered: 11/19/1998)
11/30/1998	18	REPLY by Motorola Inc. to [15-1] counter claims (sm) (Entered: 12/02/1998)
12/03/1998	19	MOTION by Motorola Inc. with Proposed Order for Ryan K. Yagura, Esq. to Appear Pro Hac Vice re: [19-1] motion (sm) (Entered: 12/07/1998)
12/08/1998		So Ordered GRANTING [19-1] motion for Ryan K. Yagura, Esq. to Appear Pro Hac Vice (signed by Judge Joseph J. Farnan Jr.) Notice to all parties. (sm) (Entered: 12/09/1998)
12/14/1998	20	CERTIFICATE OF SERVICE by Power Integrations RE: Pltf's 1st set of interrogs. (1-24) & Pltf's 1st request for production of documents and things (Nos. 1-87). (sm) (Entered: 12/15/1998)
12/18/1998	21	JOINT REPORT Of Rule 26(f) Meeting Of Parties by Power Integrations, Motorola Inc. (sm) (Entered: 12/18/1998)
12/22/1998	22	Letter to the Court dated 12/22/98 by William J. Marsden, Jr., Esq. RE: Enclosed stipulated proposed protective order. (sm) (Entered: 12/23/1998)
12/22/1998	23	STIPULATED Protective Order with proposed order (sm) (Entered: 12/28/1998)
12/23/1998	24	CERTIFICATE OF SERVICE by Motorola Inc. RE: Dft's 1st request for production of documents and things (Nos. 1-80). (sm) Modified on 12/28/1998 (Entered: 12/28/1998)
12/28/1998		So Ordered GRANTING [23-1] stipulation (signed by Judge Joseph J. Farnan Jr.) Notice to all parties. (sm) (Entered: 12/28/1998)
01/12/1999	25	CERTIFICATE OF SERVICE by Power Integrations RE: Pltf's initial disclosure statement. (sm) Modified on 01/21/1999 (Entered: 01/13/1999)

01/12/1999	26	CERTIFICATE OF SERVICE by Motorola Inc. RE: Dft's initial disclosures. (sm) Modified on 01/21/1999 (Entered: 01/13/1999)
01/14/1999	27	ORDER that the Court will conduct a scheduling conference pursuant to F.R.C.P. 16(b) on 1/27/99 at 1:45 p.m. Delaware counsel shall attend said scheduling conference for the purpose of discussing the scheduling matters set forth in F.R.C.P. 16(b). Counsel in attendance at this conference need not be the counsel who will try the case. , set Scheduling Conference for 1:45 1/27/99 (signed by Judge Joseph J. Farnan Jr.) copies to: counsel (sm) Modified on 01/21/1999 (Entered: 01/21/1999)
01/15/1999	28	CERTIFICATE OF SERVICE by Motorola Inc. RE: Dft's response to pltf's 1st set of interrogs. (Nos. 1-24) & Dft's response to pltf's 1st request for production of documents and things (Nos. 1-87). (sm) (Entered: 01/21/1999)
01/25/1999	29	CERTIFICATE OF SERVICE by Power Integrations RE: Pltf's response to dft's 1st request for production of documents and things (Nos. 1-80). (sm) (Entered: 01/29/1999)
01/27/1999		Scheduling conference held (Farnan, J), B. Gaffigan, rptr; Jury Trial scheduled for 10/4/99. Pretrial conference on 9/24/99 at 11:00 a.m. Parties to submit proposed scheduling order. (sm) (Entered: 02/02/1999)
01/27/1999		Deadline updated; set Pretrial Conference for 11:00 9/24/99 , set Jury Trial for 9:00 10/4/99 per calendar notice. (sm) (Entered: 02/02/1999)
01/28/1999	30	Steno Notes for 1/27/99 Rule 16 conference, B. Gaffigan, rptr. (sm) (Entered: 02/02/1999)
01/28/1999	31	TRANSCRIPT filed [0-0] Scheduling conference for dates of 1/27/99, B. Gaffigan, rptr. (sm) (Entered: 02/02/1999)
02/01/1999	32	Letter to the Court dated 2/1/99 by William J. Marsden, Jr., Esq. RE: Enclosed parties proposed scheduling order as agreed to at the scheduling conference on 1/27/99. (sm) (Entered: 02/05/1999)
02/02/1999	33	UNOPPOSED MOTION by Power Integrations with Proposed Order to Amend [15-1] reply and counterclaims re: [33-1] motion (sm) (Entered: 02/05/1999)
02/04/1999	34	CERTIFICATE OF SERVICE by Motorola Inc. RE: Dft's 1st set of interrogs. (1-22). (sm) (Entered: 02/09/1999)
02/08/1999	35	SCHEDULING ORDER setting Discovery cutoff 8/27/99 ; Deadline for filing dispositive motions 8/5/99 ; Proposed Pretrial Order due on 9/21/99 (signed by Judge Joseph J. Farnan Jr.) copies to: counsel (sm) (Entered: 02/11/1999)

02/08/1999		So Ordered GRANTING [33-1] motion to Amend [15-1] reply and counterclaims (signed by Judge Joseph J. Farnan Jr.) Notice to all parties. (sm) (Entered: 02/11/1999)
02/08/1999	36	FIRST AMENDED REPLY by Power Integrations to counterclaim : amends [15-1] counterclaim answer (sm) (Entered: 02/11/1999)
02/08/1999	36	AMENDED COUNTERCLAIM by Power Integrations, Inc's : amending [15-1] counter claim (sm) Modified on 02/24/1999 (Entered: 02/11/1999)
02/11/1999	37	MOTION by Motorola Inc. with Proposed Order for Jeffrey A. Fehervari, Esq. to Appear Pro Hac Vice re: [37-1] motion (sm) (Entered: 02/12/1999)
02/12/1999		Deadline updated; set Status Telephone Conference for 3/12/99, Time TBA , set Status Telephone Conference for 5/17/99, Time TBA (sm) (Entered: 02/12/1999)
02/12/1999		So Ordered GRANTING [37-1] motion for Jeffrey A. Fehervari, Esq. to Appear Pro Hac Vice (signed by Judge Joseph J. Farnan Jr.) Notice to all parties. (sm) (Entered: 02/16/1999)
02/25/1999	38	STIPULATION with proposed order that the time within which dft. shall respond to pltf's first amended reply and counterclaims is extended to 3/1/99. (sm) (Entered: 03/03/1999)
02/25/1999	39	CERTIFICATE OF SERVICE by Power Integrations RE: Subpoena to TelCom Semiconductor Incorporated. (sm) (Entered: 03/03/1999)
02/26/1999	40	MOTION by Power Integrations with Proposed Order for A Preliminary Injunction Answer Brief due 3/12/99 re: [40-1] motion (sm) (Entered: 03/03/1999)
02/26/1999	41	OPENING BRIEF Filed by Power Integrations [40-1] motion for A Preliminary Injunction (SEALED) (sm) (Entered: 03/03/1999)
02/26/1999	42	Declaration of Frank E. Scherkenbach in Support of Pltf's Motion For A Preliminary Injunction (SEALED) (sm) (Entered: 03/03/1999)
02/26/1999	43	Declaration of R. Blauschild in Support of Pltf's Motion For A Preliminary Injunction That Claims 1 and 4-6 Of U.S. Patent No. 5,014, 178, Are Infringed By Dft's Devices MC33369-MC33374 (SEALED) (sm) (Entered: 03/03/1999)
02/26/1999	44	Declaration of Howard Earhart in Support of Pltf's Motion For Preliminary Injunction (sm) (Entered: 03/03/1999)
02/26/1999	45	Notice of Deficiency from the court to plaintiff Power Integrations (Declaration of Howard Earhart does not have original signature).

		(sm) (Entered: 03/03/1999)
02/26/1999	46	Letter to the Court dated 2/26/99 by William J. Marsden, Jr., Esq. RE: Pltf's requests an immediate hearing on their motion for preliminary injunction. (sm) (Entered: 03/03/1999)
03/01/1999	47	REPLY by Motorola Inc. to amended reply and counterclaims: [36-1] amended claim (sm) (Entered: 03/04/1999)
03/04/1999	48	Letter to the Clerk of the Court dated 3/4/99 by William J. Marsden, Jr., Esq. RE: Attached original signature of Howard Earhart to clear up deficiency (D.I. 45). (sm) (Entered: 03/05/1999)
03/04/1999		So Ordered GRANTING [38-1] stipulation (signed by Judge Joseph J. Farnan Jr.) Notice to all parties. (sm) (Entered: 03/05/1999)
03/05/1999	49	Letter to the Court dated 3/5/99 by William J. Marsden, Jr., Esq. RE: Enclosed stipulated preliminary injunction scheduling order. (sm) (Entered: 03/05/1999)
03/08/1999	50	CERTIFICATE OF SERVICE by Motorola Inc. RE: Dft's suppl. responses to pltf's 1st set of interrogs. [Nos. 1-24]. (sm) (Entered: 03/08/1999)
03/09/1999	51	STIPULATED ORDER Regarding Scheduling On Pltf's Motion For Preliminary Injunction setting answer brief and reply brief deadlines. Pltf. shall make its preliminary injunction declarants, Howard Earhart and Robert Blauschild, available for deposition by Dft. between the dates of 3/22/99 and 3/26/99. Dft. shall make its declarants (those utilized in support of Dft's answering brief) available for deposition beginning 4/5/99, reset Answer Brief Deadline to 4/2/99 re: [40-1] motion for A Preliminary Injunction , set Reply Brief Deadline to 4/16/99 re: [40-1] motion for A Preliminary Injunction , Motion Hearing set for 9:00 4/23/99 for [40-1] motion for A Preliminary Injunction (signed by Judge Joseph J. Farnan Jr.) copies to: counsel (sm) (Entered: 03/10/1999)
03/09/1999	52	Letter to the Court dated 3/9/99 by William J. Marsden, Jr., Esq. RE: The parties request the preliminary injunction hearing be held the week of 4/26/99. (sm) (Entered: 03/10/1999)
03/09/1999	53	CERTIFICATE OF SERVICE by Power Integrations RE: Pltf's response to dft's 1st set of interrogs. (Nos. 1-22). (sm) (Entered: 03/10/1999)
03/11/1999		Deadline updated; set Telephone Conference for 12:30 3/12/99 per calendar notice. (sm) (Entered: 03/12/1999)
03/12/1999	54	NOTICE by Motorola Inc. to take deposition of Howard Earhart on 3/22/99 at 9:30 a.m. (sm) (Entered: 03/12/1999)

03/16/1999		Deadline updated; reset Telephone Conference for 12:30 3/17/99 per calendar notice. (sm) (Entered: 03/16/1999)
03/17/1999		Tele-conference held (Farnan, J), B. Gaffigan, rptr; Three and a half hours set for motion hearing in April, 1999. One expert for each side pending briefing. Court to issue Order. (sm) (Entered: 03/17/1999)
03/19/1999	55	ORDER that that Court has tentatively scheduled 3 to 3 1/2 hours for the hearing on Pltf's Motion For A Preliminary Injunction, to be held 4/23/99 at 9:00 a.m. and to consist of oral argument and testimony from 1 expert witness for each side. Such scheduling is subject to modification upon the Court's review of the completed briefing on Pltf's Motion For A Preliminary Injunction. (signed by Judge Joseph J. Farnan Jr.) copies to: counsel (sm) (Entered: 03/19/1999)
03/19/1999	56	Steno Notes for 3/17/99 telephone conference, B. Gaffigan, rptr. (sm) (Entered: 03/19/1999)
03/29/1999	57	CERTIFICATE OF SERVICE by Motorola Inc. RE: Dft's suppl. responses to pltf's 1st set of interrogs. (Nos. 4-8). (sm) (Entered: 03/29/1999)
04/02/1999	58	MOTION by Motorola Inc. for Summary Judgment Of Noninfringement Of Claims 1-6 Of The '178 Patent Answer Brief due 4/16/99 re: [58-1] motion (sm) (Entered: 04/05/1999)
04/02/1999	59	BRIEF IN SUPPORT Filed by Motorola Inc. [58-1] motion for Summary Judgment Of Noninfringement Of Claims 1-6 Of The '178 Patent (SEALED) (sm) Modified on 04/07/1999 (Entered: 04/05/1999)
04/02/1999	60	ANSWERING BRIEF Filed by Motorola Inc. [40-1] motion for A Preliminary Injunction (SEALED) (sm) (Entered: 04/05/1999)
04/02/1999	61	Declaration of Ben Adamo In Support of Dft's Opposition to Pltf's Motion For Preliminary Injunction (SEALED) (sm) (Entered: 04/05/1999)
04/02/1999	62	Declaration of David Enzminger in Support of Dft's Opposition to Pltf's Motion For Preliminary Injunction (SEALED) (sm) (Entered: 04/05/1999)
04/02/1999	63	Declaration of Bruce Carsten In Support of Dft's Opposition to Pltf's Motion For Preliminary Injunction (SEALED) (sm) (Entered: 04/05/1999)
04/16/1999	64	REPLY Filed by Power Integrations [40-1] motion for A Preliminary Injunction (SEALED) (sm) (Entered: 04/19/1999)
04/16/1999	64	OPPOSITION Filed by Power Integrations [58-1] motion for

		Summary Judgment Of Noninfringement Of Claims 1-6 Of The '178 Patent - Reply Brief due 4/23/99 (SEALED) (sm) (Entered: 04/19/1999)
04/16/1999	65	Supplemental Declaration of R. Blauschild in Support of Pltf's Motion For A Preliminary Injunction and Opposition to Dft's Motion For Summary Judgment With Respect To U.S. Patent No. 5,014,178 (SEALED) (sm) (Entered: 04/19/1999)
04/16/1999	66	Supplemental Declaration of Frank S. Scherkenback in Support of Pltf's Motion For A Preliminary Injunction and Opposition to Dft's Motion For Summary Judgment With Respect To U.S. Patent No. 5,014,178 (SEALED) (sm) (Entered: 04/19/1999)
04/19/1999		Deadline updated; set Telephone Conference for 9:00 4/20/99 per calendar notice. (sm) (Entered: 04/20/1999)
04/20/1999		Tele-conference held (Farnan, J), V. Gunning, rptr; Dft's application to continue preliminary injunction hearing on 4/23/99 is denied. (sm) (Entered: 04/20/1999)
04/21/1999	67	CERTIFICATE OF SERVICE by Motorola Inc. RE: Notice of subpoena to Blakely Sokoloff Taylor & Zafman LLP. (sm) (Entered: 04/23/1999)
04/21/1999	68	CERTIFICATE OF SERVICE by Motorola Inc. RE: Notice of deposition of Erdem Bircan. (sm) (Entered: 04/23/1999)
04/21/1999	69	CERTIFICATE OF SERVICE by Motorola Inc. RE: Notice of deposition of Alex Djenguerian. (sm) (Entered: 04/23/1999)
04/21/1999	70	CERTIFICATE OF SERVICE by Motorola Inc. RE: Notice of deposition of Vladimir Rumennik. (sm) (Entered: 04/23/1999)
04/21/1999	71	CERTIFICATE OF SERVICE by Motorola Inc. RE: Notice of deposition of Thomas E. Schatzel. (sm) (Entered: 04/23/1999)
04/21/1999	72	CERTIFICATE OF SERVICE by Motorola Inc. RE: Notice of deposition of Howard Earhart. (sm) (Entered: 04/23/1999)
04/21/1999	73	CERTIFICATE OF SERVICE by Motorola Inc. RE: Notice of deposition of Robert Staples. (sm) (Entered: 04/23/1999)
04/21/1999	74	CERTIFICATE OF SERVICE by Motorola Inc. RE: Notice of deposition of Cliff Walker. (sm) (Entered: 04/23/1999)
04/21/1999	75	CERTIFICATE OF SERVICE by Motorola Inc. RE: Notice of deposition of Dan Selleck. (sm) (Entered: 04/23/1999)
04/21/1999	76	CERTIFICATE OF SERVICE by Motorola Inc. RE: Notice of deposition of David Kung. (sm) (Entered: 04/23/1999)

04/21/1999	77	CERTIFICATE OF SERVICE by Motorola Inc. RE: Notice of deposition of Balu Balakrishnan. (sm) (Entered: 04/23/1999)
04/21/1999	78	CERTIFICATE OF SERVICE by Motorola Inc. RE: Notice of deposition of Pamela Chien. (sm) (Entered: 04/23/1999)
04/21/1999	79	CERTIFICATE OF SERVICE by Motorola Inc. RE: Notice of deposition of Shyam Dujari. (sm) (Entered: 04/23/1999)
04/22/1999	80	CERTIFICATE OF SERVICE by Motorola Inc. RE: Notice of deposition of Ed Pausa. (sm) (Entered: 04/23/1999)
04/23/1999	81	TRANSCRIPT filed [0-0] telephone conference for dates of 4/20/99, V. Gunning, rptr. (sm) (Entered: 04/23/1999)
04/23/1999	82	Letter to the Court dated 4/23/99 by William J. Marsden, Jr., Esq. RE: Attached copy of press release issued by TelCom. (sm) (Entered: 04/23/1999)
04/23/1999		Motion hearing held (Farnan, J) re: [40-1] motion for A Preliminary Injunction at 4/23/99, V. Gunning, rptr; Motion under advisement. (sm) (Entered: 04/23/1999)
04/23/1999		Exhibit list for Preliminary Injunction Hearing by Power Integrations (sm) (Entered: 04/23/1999)
04/23/1999	83	TRANSCRIPT filed [0-0] motion hearing for dates of 4/23/99, V. Gunning, rptr. (sm) (Entered: 04/23/1999)
04/23/1999	84	SURREPLY BRIEF IN OPPOSITION Filed by Motorola Inc. [40-1] motion for A Preliminary Injunction (SEALED) (sm) (Entered: 04/27/1999)
04/23/1999	84	REPLY BRIEF Filed by Motorola Inc. [58-1] motion for Summary Judgment Of Noninfringement Of Claims 1-6 Of The '178 Patent (SEALED) (sm) (Entered: 04/27/1999)
04/23/1999	85	Declaration of Debbie Brogan in Support of Motorola, Inc.'s Surreply to Power Integrations, Inc.'s Motion For Preliminary Injunction (SEALED) (sm) (Entered: 04/27/1999)
04/27/1999	86	Letter to the Court dated 4/27/99 by William J. Marsden, Jr., Esq. (SEALED) (sm) (Entered: 04/28/1999)
04/28/1999	87	Letter to the Court dated 4/28/99 by Frederick L. Cottrell, III, Esq. RE: Dft's response to pltf's letter of 4/27/99. (sm) (Entered: 04/29/1999)
04/30/1999	88	Letter to the Court dated 4/30/99 by Joanne Ceballos, Esq. RE: Attached opinion by pltf. to support their motion for preliminary injunction. (sm) (Entered: 05/03/1999)

05/03/1999	89	CERTIFICATE OF SERVICE by Power Integrations RE: Pltf's response to dft's subpoena dated 4/19/99. (sm) (Entered: 05/03/1999)
05/03/1999	90	MOTION by Power Integrations with Proposed Order for Howard G. Pollack, Esq. to Appear Pro Hac Vice re: [90-1] motion (sm) (Entered: 05/04/1999)
05/04/1999		So Ordered GRANTING [90-1] motion for Howard G. Pollack, Esq. to Appear Pro Hac Vice (signed by Judge Joseph J. Farnan Jr.) Notice to all parties. (sm) (Entered: 05/04/1999)
05/05/1999	91	Letter to the Court dated 5/5/99 by William J. Wade, Esq. RE: Dft's response to pltf's letter of 4/30/99. (sm) (Entered: 05/05/1999)
05/07/1999	92	CERTIFICATE OF SERVICE by Motorola Inc. RE: Dft's 1st set of requests for admission (Nos. 1-49) (Fed.R.Civ.Proc.36). (sm) (Entered: 05/10/1999)
05/07/1999	93	NOTICE by Power Integrations to take deposition of Motorola, Inc. pursuant to Rule 30(b)(6) on a mutually agreed time and place. (sm) (Entered: 05/10/1999)
05/07/1999	94	SECOND NOTICE by Power Integrations to take deposition of Motorola, Inc. pursuant to Rule 30(b)(6) at a mutually agreed time and place. (sm) (Entered: 05/10/1999)
05/07/1999	95	THIRD NOTICE by Power Integrations to take deposition of Motorola, Inc. pursuant to Rule 30(b)(6) at a mutually agreed time and place. (sm) (Entered: 05/10/1999)
05/14/1999	96	CERTIFICATE OF SERVICE by Motorola Inc. RE: Dft's 1st notice of deposition of Pltf. pursuant to Rule 30(b)(6). (sm) (Entered: 05/14/1999)
05/18/1999	97	CERTIFICATE OF SERVICE by Motorola Inc. RE: Dft's notice of taking of deposition of Edwin H. Taylor. (sm) (Entered: 05/19/1999)
05/18/1999	98	CERTIFICATE OF SERVICE by Motorola Inc. RE: Dft's 2nd notice of deposition of pltf. pursuant to Rule 30(b)(6) & Dft's 3rd notice of deposition of pltf. pursuant to Rule 30(b)(6). (sm) (Entered: 05/19/1999)
05/28/1999	99	CERTIFICATE OF SERVICE by Motorola Inc. RE: Dft's notice of deposition and production of documents of law offices of Thomas E. Schatzel, P.C. & Dft's notices of deposition of Leif Lund, Brooks Leman, Bill Black-Hogins, S. Takahashi, Jonathan Shieh, Jim Yeh, S.J. Hong, Pamela Chien, Bob Lelieur, Rolane Rodriguez and Jessica Ting. (sm) (Entered: 06/02/1999)
06/02/1999	100	NOTICE by Power Integrations to take 30(b)(6) deposition of

		defendant, Motorola, Inc. on a mutual agreeable time and place to be negotiated by Counsel. (sm) (Entered: 06/03/1999)
06/07/1999	101	CERTIFICATE OF SERVICE by Motorola Inc. RE: Dft's notice of deposition and production of documents of Ricoh Electronics, Inc., Electronic Devices Division. (sm) (Entered: 06/14/1999)
06/09/1999	102	Subpoena for TelCom Semiconductor, Incorporated, Attn: Phillip M. Drayer, CEO (sm) (Entered: 06/15/1999)
06/16/1999		Tele-conference held (Farnan, J), V. Gunning, rptr; Discovery dispute resolved. No order will be issued. (sm) (Entered: 06/17/1999)
07/01/1999	103	**Terminated attorney appearance of Potter Anderson & Corroon, LLP and enter the appearance of Fish & Richardson, P.C. (sm) (Entered: 07/06/1999)
07/14/1999		Deadline updated; set Telephone Conference for 10:00 7/15/99 per calendar notice. (sm) (Entered: 07/14/1999)
07/14/1999		Deadline updated; reset Telephone Conference for 10:30 7/22/99 per calendar notice. (sm) (Entered: 07/14/1999)
07/20/1999	104	Letter MOTION by Motorola Inc. to Compel Production Of Financial Documents re: [104-1] motion (SEALED) (sm) Modified on 07/23/1999 (Entered: 07/21/1999)
07/20/1999	105	Letter to the Court dated 7/20/99 by William J. Marsden, Jr., Esq. RE: Pltf. requests the Court's assistance in compelling dft. to immediately produce discovery materials. (sm) (Entered: 07/21/1999)
07/20/1999	106	Letter MOTION by Motorola Inc. to Compel Compliance with Subpoena Directed to Pltf's Expert, Richard Troxel re: [106-1] motion (sm) Modified on 07/23/1999 (Entered: 07/21/1999)
07/20/1999	107	Letter to the Court dated 7/20/99 by William J. Wade, Esq. (SEALED) (sm) (Entered: 07/21/1999)
07/22/1999		Tele-conference held (Farnan, J), K. Maurer, rptr; Court to issue order on letter motions filed 7/21/99 by parties. Parties to contact the Magistrate Judge to set up mediation. (sm) (Entered: 07/23/1999)
07/23/1999	108	ORDER that the record of the 7/22/99 teleconference is SO ORDERED. (signed by Judge Joseph J. Farnan Jr.) copies to: counsel (sm) (Entered: 07/26/1999)
07/23/1999	109	Steno Notes for 7/22/99 teleconference, K. Maurer, rptr. (sm) (Entered: 07/26/1999)
07/23/1999	110	TRANSCRIPT filed [0-0] telephone conference for dates of 7/22/99, K. Maurer, rptr. (sm) (Entered: 07/26/1999)

08/02/1999	111	Copy of letter to Judge Thynge dated 8/2/99 by Frederick L. Cottrell, III, Esq. RE: Confirmation that the initial teleconference will be held 8/12/99 at 12:00 pm. (sm) (Entered: 08/03/1999)
08/03/1999		Deadline updated; set Telephone Conference for 12:00 8/12/99 (SEE D.I. 111) (sm) (Entered: 08/03/1999)
08/05/1999	112	MOTION by Motorola Inc. with Proposed Order for Summary Judgment Answer Brief due 8/19/99 re: [112-1] motion (sm) (Entered: 08/06/1999)
08/05/1999	113	BRIEF IN SUPPORT Filed by Motorola Inc. [112-1] motion for Summary Judgment of Noninfringement of the '381 Patent (SEALED) (sm) (Entered: 08/06/1999)
08/05/1999	114	Declaration of John Roop in Support of Dft's Motion For Summary Judgment of Noninfringement of the '381 Patent (SEALED) (sm) (Entered: 08/06/1999)
08/05/1999	115	Declaration of David P. Enzminger in Supprt of Dft's Motion For Summary Judgment of Noninfringement of the '381 Patent (SEALED) (sm) (Entered: 08/06/1999)
08/06/1999	116	Letter to the Court dated 8/6/99 by William J. Marsden, Jr., Esq. RE: Enclosed proposed order releasing pltf's exhibits introduced at the preliminary injunction hearing so pltf's may prepare for trial. (sm) (Entered: 08/09/1999)
08/11/1999	117	ORDER that pltf's exhibits PI 1,2,3 & 4 from 4/23/99 prelim. inj. hrg. are hereby released to the custody of the pltf. and shall be returned to the Clerk at the time of trial (signed by Judge Joseph J. Farnan Jr.) copies to: cnsl. (ssb) (Entered: 08/11/1999)
08/19/1999	118	STIPULATION w/pro. order that pltf's answering brief in resp. to deft's motion for summ. jdmt. is extended until 8/20/99 (ssb) (Entered: 08/20/1999)
08/20/1999	119	BRIEF IN OPPOSITION Filed by Power Integrations [112-1] motion for Summary Judgment - Reply Brief due 8/27/99 (SEALED) (sm) (Entered: 08/24/1999)
08/20/1999	120	Declaration of Howard G. Pollack in Support of Pltf's Opposition to Dft's Motion For Summary Judgment (SEALED) (sm) (Entered: 08/24/1999)
08/20/1999	121	Declaration of R. Blauschild in Support of Pltf's Opposition to Dft's Motion For Summary Judgment (SEALED) (sm) (Entered: 08/24/1999)
08/23/1999	122	Return Acknowledgment of PTX 1-5 exhibits used during preliminary

		injunction hearing. (sm) (Entered: 08/25/1999)
08/24/1999		So Ordered GRANTING [118-1] stipulation (signed by Judge Joseph J. Farnan Jr.) Notice to all parties. (sm) (Entered: 08/26/1999)
08/26/1999	123	Letter to the Clerk of the Court dated 8/26/99 by William J. Marsden, Jr., Esq. RE: Enclosed original signature page of R. Blauschild to replace the copy filed on 8/20/99. (sm) (Entered: 08/27/1999)
08/27/1999	124	STIPULATION with proposed order that the time within which dft. shall file its reply brief in support of their motion for summary judgment is extended to 8/31/99. (sm) (Entered: 08/27/1999)
08/31/1999	125	REPLY BRIEF Filed by Motorola Inc. [112-1] motion for Summary Judgment (SEALED) (sm) (Entered: 09/02/1999)
08/31/1999	126	Supplemental Declaration of David P. Enzminger in Support of Dft's Motion For Summary Judgment of Noninfringement of the '381 Patent (SEALED) (sm) (Entered: 09/02/1999)
09/01/1999		So Ordered GRANTING [124-1] stipulation (signed by Judge Joseph J. Farnan Jr.) Notice to all parties. (sm) (Entered: 09/03/1999)
09/03/1999	127	Letter to the Court dated 9/3/99 by William J. Marsden, Jr., Esq. RE: Pltf's request oral argument on dft's motion for summary judgment of noninfringement. (sm) (Entered: 09/03/1999)
09/03/1999	128	Letter to the Court dated 9/3/99 by William J. Wade, Esq. RE: Dft's request oral argument on their motion for summary judgment of noninfringement. (sm) (Entered: 09/03/1999)
09/10/1999	129	MOTIONS by Power Integrations in Limine Answer Brief due 9/24/99 re: [129-1] motion (SEALED) (sm) (Entered: 09/13/1999)
09/10/1999	130	MOTION by Motorola Inc. in Limine To Exclude Certain Testimony By Richard B. Troxel Answer Brief due 9/24/99 re: [130-1] motion (SEALED) (sm) (Entered: 09/13/1999)
09/10/1999	131	Declaration of Mark A. Samuels in Support of Motorola's Motion in Limine to Exclude Certain Testimony By Richard B. Troxel (SEALED) (sm) (Entered: 09/13/1999)
09/13/1999	132	Letter to the Court dated 9/13/99 by William J. Marsden, Jr., Esq. (SEALED) (sm) (Entered: 09/14/1999)
09/17/1999	133	Letter to the Court dated 9/16/99 by William J. Wade, Esq. RE: Dft. requests pltf's request for additional discovery be denied. (sm) (Entered: 09/17/1999)
09/17/1999	134	OPPOSITION Filed by Power Integrations [130-1] motion in Limine To Exclude Certain Testimony By Richard B. Troxel - Reply Brief

		due 9/24/99 (SEALED) (sm) (Entered: 09/20/1999)
09/17/1999	135	Letter to the Court dated 9/17/99 by William J. Wade, Esq. RE: Attached letter from David P. Enzminger to Howard G. Pollack dated 8/30/99. (sm) (Entered: 09/20/1999)
09/17/1999	136	OPPOSITION Filed by Motorola Inc. [129-1] motion in Limine - Reply Brief due 9/24/99 (sm) (Entered: 09/20/1999)
09/21/1999	137	REPLY Filed by Power Integrations [129-1] motion in Limine (SEALED) (sm) (Entered: 09/22/1999)
09/21/1999	138	REPLY Filed by Motorola Inc. [130-1] motion in Limine To Exclude Certain Testimony By Richard B. Troxel (SEALED) (sm) (Entered: 09/22/1999)
09/21/1999	139	Declaration of Mark A. Samuels in Support of Dft's Reply (SEALED) (sm) (Entered: 09/22/1999)
09/22/1999	140	Proposed pre-trial order filed by Power Integrations, Motorola Inc. (SEALED) (sm) (Entered: 09/23/1999)
09/22/1999	141	Letter to the Court dated 9/22/99 by William J. Marsden, Jr., Esq. RE: The parties will submit their proposed jury instructions, form of verdict and proposed voir dire before the pretrial conference on 9/24/99. (sm) (Entered: 09/23/1999)
09/23/1999	142	Letter to the Court dated 9/23/99 by William J. Marsden, Jr., Esq. RE: Attached jointly proposed jury questionnaire. (sm) (Entered: 09/23/1999)
09/24/1999	143	MOTION by Power Integrations with Proposed Order for Steven R. Schaefer, Esq. to Appear Pro Hac Vice re: [143-1] motion (sm) (Entered: 09/29/1999)
09/24/1999	144	Letter to the Court dated 9/24/99 by William J. Marsden, Jr., Esq. (SEALED) (sm) (Entered: 09/29/1999)
09/24/1999	145	Letter Brief to the Court dated 9/24/99 by William J. Wade, Esq. RE: Dft's outline of disputed claim construction issues. (sm) (Entered: 09/29/1999)
09/24/1999		Pre-trial conference held (Farnan, J), B. Gaffigan, rptr; The parties to have 40 hours for trial. The last day should be 10/15/99. Jurors permitted to take notes. Jurors permitted to have questionnaires before trial starts. (sm) (Entered: 09/29/1999)
09/24/1999	146	Letter to the Court dated 9/24/99 by William J. Marsden, Jr., Esq. RE: Pltf's response to dft's request for the Court to conduct separate trials on the issues of liability and damages. (sm) (Entered: 09/29/1999)

09/24/1999	147	Letter to the Court dated 9/24/99 by William J. Marsden, Jr., Esq. RE: Attached copy of the modified jury questionnaire. (sm) (Entered: 09/29/1999)
09/24/1999	148	TRANSCRIPT filed [0-0] pre-trial conference for dates of 9/24/99, B. Gaffigan, rptr. (sm) (Entered: 09/29/1999)
09/24/1999	149	Joint Proposed Voir dire questions by Power Integrations, Motorola Inc. (sm) (Entered: 09/29/1999)
09/24/1999	150	Proposed Jury instructions by Power Integrations (sm) (Entered: 09/29/1999)
09/24/1999	151	Proposed Verdict and Interrogatories to the Jury filed by Power Integrations (sm) (Entered: 09/29/1999)
09/24/1999	152	Proposed Preliminary Jury instructions by Motorola Inc. (sm) (Entered: 09/29/1999)
09/24/1999	153	Proposed Closing Jury instructions by Motorola Inc. (sm) (Entered: 09/29/1999)
09/24/1999	154	Proposed Verdict and Interrogatories to the Jury filed by Motorola Inc. (sm) (Entered: 09/29/1999)
09/27/1999		So Ordered [140-1] pretrial order (signed by Judge Joseph J. Farnan Jr.) (exit copies to counsel) (SEALED) (sm) (Entered: 09/27/1999)
09/27/1999	155	Steno Notes for 9/24/99 pretrial conference, B. Gaffigan, rptr. (sm) (Entered: 09/29/1999)
09/30/1999		So Ordered GRANTING [143-1] motion for Steven R. Schaefer, Esq. to Appear Pro Hac Vice (signed by Judge Joseph J. Farnan Jr.) Notice to all parties. (sm) (Entered: 09/30/1999)
09/30/1999	156	MEMORANDUM ORDER that Pltf's [40-1] motion for A Preliminary Injunction is DENIED. (signed by Judge Joseph J. Farnan Jr.) copies to: counsel (sm) (Entered: 09/30/1999)
10/01/1999	157	Letter to the Court dated 10/1/99 by William J. Wade, Esq. RE: Attached proposed preliminary jury instructions agreed to by the parties. (sm) (Entered: 10/04/1999)
10/01/1999	158	MEMORANDUM ORDER that Dft's [130-1] motion in Limine To Exclude Certain Testimony By Richard B. Troxel is DENIED. Pltf's [129-1] motions in Limine are DENIED with respect to ON Semiconductor and the testimony of Matthew R. Lynde, and GRANTED with respect to the California litigation. (signed by Judge Joseph J. Farnan Jr.) copies to: counsel (sm) (Entered: 10/05/1999)
10/01/1999	159	MEMORANDUM ORDER that Dft's [58-1] motion for Summary

		Judgment Of Noninfringement Of Claims 1-6 Of The '178 Patent is GRANTED with respect to Pltf's claims of literal infringement and infringement under the doctrine of equivalents of claims 1-6 of the '178 patent. The Dft's Motion For Summary Judgment (D.I. 58) is DENIED with respect to Pltf's claims of inducement of infringement and contributory infringement of claims 1-6 of the '178 patent. (signed by Judge Joseph J. Farnan Jr.) copies to: counsel (sm) (Entered: 10/05/1999)
10/01/1999	160	ORDER that Dft's [112-1] motion for Summary Judgment is DENIED, with leave to renew at the close of the Pltf's case or, alternatively, at the conclusion of the presentation of evidence by both parties. (signed by Judge Joseph J. Farnan Jr.) copies to: counsel (sm) (Entered: 10/05/1999)
10/01/1999	161	Letter to the Court dated 10/1/99 by William J. Marsden, Jr., Esq. RE: Pltf's attached deposition designations that may be read on Monday, 10/4/99. (sm) (Entered: 10/05/1999)
10/01/1999	162	Letter to the Court dated 10/1/99 by William J. Marsden, Jr., Esq. RE: Pltf's enclosed modified version of the joint preliminary jury instructions. (sm) (Entered: 10/05/1999)
10/04/1999		Jury trial held (Farnan, J) (Day 1), K. Maurer/B. Gaffigan, rptrs. (sm) (Entered: 10/04/1999)
10/04/1999	163	Letter to the Court dated 10/1/99 by William J. Marsden, Jr., Esq. RE: Attached joint proposed preliminary jury instructions. (sm) (Entered: 10/05/1999)
10/04/1999	164	Letter to the Court dated 10/4/99 by William J. Wade, Esq. RE: Enclosed courtesy copy of Dft's Motion to Preclude Pltf's Lay Witnesses from Testifying. (sm) (Entered: 10/05/1999)
10/04/1999	165	MOTION by Motorola Inc. To Preclude Pltf's Lay Witnesses From Testifying About Their Study and Analysis of Dft's Accused MC3337X Devices Answer Brief due 10/18/99 re: [165-1] motion (SEALED) (sm) (Entered: 10/05/1999)
10/04/1999	166	Declaration of David P. Enzminger in Support of Dft's Motion to Preclude Pltf's Lay Witnesses Their Study and Analysis of the MC3337X Devices (SEALED) (sm) (Entered: 10/05/1999)
10/04/1999	167	REQUEST by Power Integrations to Withdraw or Revise "In Series" Claim Construction Ruling (SEALED) (sm) (Entered: 10/05/1999)
10/04/1999	168	OPPOSITION BRIEF Filed by Power Integrations [165-1] motion To Preclude Pltf's Lay Witnesses From Testifying About Their Study and Analysis of Dft's Accused MC3337X Devices - Reply Brief due

		10/12/99 (SEALED) (sm) (Entered: 10/05/1999)
10/05/1999		Jury trial held (Farnan, J) (Day 2), V. Gunning, rptr. (sm) (Entered: 10/05/1999)
10/05/1999	169	Steno Notes for 10/4/99 Jury trial (Day 1), B. Gaffigan, rptr. (sm) (Entered: 10/06/1999)
10/06/1999	170	RESPONSE by Motorola Inc. in opposition to [167-1] request to Withdraw (SEALED) (sm) (Entered: 10/06/1999)
10/06/1999		Jury trial held (Farnan, J) (Day 3), K. Maurer/L. Dibbs/B. Gaffigan, rptrs. (sm) (Entered: 10/06/1999)
10/06/1999	171	Letter to the Court dated 10/6/99 by William J. Marsden, Jr., Esq. RE: Pltf's response to dft's request for a curative instruction based on pltf's opening statement. (sm) (Entered: 10/07/1999)
10/06/1999	172	MOTION by Motorola Inc. To Preclude Hearsay-Within-Hearsay Electronic Mail Messages From Daniel Selleck Answer Brief due 10/20/99 re: [172-1] motion (SEALED) (sm) (Entered: 10/07/1999)
10/06/1999	173	Declaration of Mark A. Samuels in Support of Dft's Motion to Preclude Hearsay-Within-Hearsay Electronic Mail Messages From Daniel Selleck (SEALED) (sm) (Entered: 10/07/1999)
10/07/1999		Jury trial held (Farnan, J) (Day 4), V. Gunning, rptr. (sm) (Entered: 10/07/1999)
10/07/1999	174	Steno Notes for 10/6/99 jury trial, B. Gaffigan, rptr. (sm) (Entered: 10/08/1999)
10/08/1999		Jury trial held (Farnan, J) (Day 5), K. Maurer/B. Gaffigan, rptr. (sm) (Entered: 10/13/1999)
10/12/1999	175	ORDER that the Clerk of the Court is directed to furnish dinner for 9 jurors and 1 U.S. Marshal on 10/12/99. (signed by Judge Joseph J. Farnan Jr.) copies to: Financial Administrator (sm) (Entered: 10/13/1999)
10/12/1999		Jury trial held (Farnan, J) (Day 6), V. Gunning, rptr. (sm) (Entered: 10/13/1999)
10/12/1999	176	Letter to the Court dated 10/12/99 by William J. Marsden, Jr., Esq. (SEALED) (sm) (Entered: 10/14/1999)
10/12/1999	177	Letter to the Court dated 10/12/99 by William J. Marsden, Jr., Esq. (SEALED) (sm) (Entered: 10/14/1999)
10/12/1999	178	Letter to the Court dated 10/12/99 by William J. Marsden, Jr., Esq. (SEALED) (sm) (Entered: 10/14/1999)

10/13/1999		Jury trial held (Farnan, J) (Day 7), K. Maurer/B. Gaffigan, rptrs. (sm) (Entered: 10/14/1999)
10/13/1999	179	REQUEST by Power Integrations for An Evidentiary Hearing and Supplemental Submission Regarding the Construction of "In Series" in Power Integrations' '178 Patent (SEALED) (sm) (Entered: 10/14/1999)
10/13/1999	180	Proposed Revised Closing Jury instructions by Motorola Inc. (sm) (Entered: 10/14/1999)
10/13/1999	181	Proposed Revised Form of Special Verdict and Interrogatories to the Jury filed by Motorola Inc. (sm) (Entered: 10/14/1999)
10/13/1999	182	Letter to the Court dated 10/13/99 by William J. Wade, Esq. RE: Enclosed copies of dft's revised proposed jury instructions and proposed special verdict form in hard copy and on disk. (sm) (Entered: 10/14/1999)
10/14/1999	183	ORDER that the Clerk of the Court is directed to furnish lunch for 9 jurors on 10/14/99. (signed by Judge Joseph J. Farnan Jr.) copies to: Financial Administrator (sm) (Entered: 10/14/1999)
10/14/1999	184	Steno Notes for 10/8/99 jury trial, B. Gaffigan, rptr. (sm) (Entered: 10/14/1999)
10/14/1999	185	Steno Notes for 10/13/99 jury trial, B. Gaffigan, rptr. (sm) (Entered: 10/14/1999)
10/14/1999	186	Letter to the Court dated 10/14/99 by William J. Marsden, Jr., Esq. RE: Pltf. requests the trial transcript through 10/13/99 be revised to reflect the changes of exhibits. (sm) (Entered: 10/14/1999)
10/14/1999	187	MOTION by Motorola Inc. To Preclude Richard B. Troxel From Testifying About the Ease of Designing Around the '410 Patent Answer Brief due 10/28/99 re: [187-1] motion (SEALED) (sm) (Entered: 10/14/1999)
10/14/1999	188	Declaration of Mark A. Samuels in Support of Dft's Motion to Preclude Richard B. Troxel from Testifying About the Ease of Designing Around the '410 Patent (SEALED) (sm) (Entered: 10/14/1999)
10/14/1999	189	Joint Proposed Form of Special Verdict and Interrogatories to the Jury filed by Power Integrations, Motorola Inc. (sm) (Entered: 10/15/1999)
10/14/1999		Jury trial held (Farnan, J) (Day 8), V. Gunning, rptr. (sm) (Entered: 10/15/1999)
10/15/1999	190	MOTION by Power Integrations for Judgment as a Matter of Law

		That (1) Motorola Infringes the Power Integrations Patents; (2) Power Integrations' Patents are not Invalid; (3) Motorola Willfully Infringes the Power Integrations Patents; (4) Power Integrations Does Not Infringe Motorola's Patents; and (5) Power Integrations Does not Wilfully Infringe Motorola's Patents Answer Brief due 10/29/99 re: [190-1] motion (sm) (Entered: 10/15/1999)
10/15/1999	191	Proposed Closing Jury instructions (sm) (Entered: 10/15/1999)
10/15/1999	192	Joint Proposed Closing Jury instructions by Power Integrations, Motorola Inc. (sm) (Entered: 10/15/1999)
10/15/1999	193	Proposed Special Verdict and Interrogatories to the Jury filed by Power Integrations, Motorola Inc. (sm) (Entered: 10/15/1999)
10/15/1999	194	Power Integrations' Proffer of Testimonial Evidence by Deposition of Roger Whatley (SEALED) (sm) (Entered: 10/15/1999)
10/15/1999	195	Closing Jury instructions-CHARGE TO THE JURY (sm) (Entered: 10/15/1999)
10/15/1999	196	Proposed Special Verdict and Interrogatories to the Jury filed by Power Integrations, Motorola Inc. (sm) (Entered: 10/15/1999)
10/15/1999	197	Letter to the Court dated 10/15/99 by William J. Marsden, Jr., Esq. RE: Pltf's attached offer of demonstrative exhibits used in this case. (sm) (Entered: 10/15/1999)
10/15/1999	198	JURY VERDICT for Power Integrations (sm) (Entered: 10/16/1999)
10/15/1999		Jury trial held (Farnan, J) (Day 8-Final Day), B. Gaffigan/ K. Maurer, rptrs. (sm) (Entered: 10/16/1999)
10/15/1999	199	Jury notes & Court Exhibits filed (sm) (Entered: 10/18/1999)
10/15/1999	200	ORDER that the Clerk of the Court for the District of Delaware is directed to furnish lunch for 9 jurors on 10/15/99. (signed by Judge Joseph J. Farnan Jr.) copies to: Financial Administrator (sm) (Entered: 10/22/1999)
10/15/1999	201	ORDER that the Clerk of the Court is directed to furnish dinner for 9 jurors and 1 U.S. Marshal on 10/15/99. (signed by Judge Joseph J. Farnan Jr.) copies to: Financial Administrator (sm) (Entered: 10/22/1999)
10/18/1999	202	Steno Notes for 10/15/99 jury trial, B. Gaffigan, rptr. (sm) (Entered: 10/22/1999)
10/20/1999	203	MEMORANDUM ORDER that Pltf's Request to Withdraw or Revise "In Series" Claim Construction Ruling (D.I. 167) is DENIED. (signed by Judge Joseph J. Farnan Jr.) copies to: counsel (sm) (Entered:

		10/26/1999)
10/20/1999	204	MOTION by Power Integrations with Proposed Order for Permanent Injunction Answer Brief due 11/3/99 re: [204-1] motion (sm) (Entered: 10/26/1999)
10/20/1999	205	Letter to the Court dated 10/20/99 by William J. Marsden, Jr., Esq. RE: Pltf. request's the Court enter judgment on the jury verdict. (sm) (Entered: 10/26/1999)
10/21/1999	206	Steno Notes for 10/4/99 thru 10/16/99 jury trial, K. Maurer, rptr. (sm) (Entered: 10/26/1999)
10/21/1999	207	TRANSCRIPT (Volume A) filed [0-0] jury trial for dates of 10/4/99 (sm) (Entered: 10/26/1999)
10/21/1999	208	TRANSCRIPT (Volume B) filed [0-0] jury trial for dates of 10/5/99 (sm) (Entered: 10/26/1999)
10/21/1999	209	TRANSCRIPT (Volume C) filed [0-0] jury trial for dates of 10/6/99 (sm) (Entered: 10/26/1999)
10/21/1999	210	TRANSCRIPT (Volume C-Selleck-direct) filed [0-0] jury trial for dates of 10/6/99 (SEALED) (sm) (Entered: 10/26/1999)
10/21/1999	211	TRANSCRIPT (Volume D) filed [0-0] jury trial for dates of 10/7/99 (sm) (Entered: 10/26/1999)
10/21/1999	212	TRANSCRIPT (Volume E) filed [0-0] jury trial for dates of 10/8/99 (sm) (Entered: 10/26/1999)
10/21/1999	213	TRANSCRIPT (Volume F) filed [0-0] jury trial for dates of 10/12/99 (sm) (Entered: 10/26/1999)
10/21/1999	214	TRANSCRIPT (Volume G) filed [0-0] jury trial for dates of 10/13/99 (sm) (Entered: 10/26/1999)
10/21/1999	215	TRANSCRIPT (Volume H) filed [0-0] jury trial for dates of 10/14/99 (sm) (Entered: 10/26/1999)
10/21/1999	216	TRANSCRIPT (Volume I) filed [0-0] jury trial for dates of 10/15/99 (sm) (Entered: 10/26/1999)
10/21/1999	217	TRANSCRIPT (Volume J) filed [0-0] jury trial for dates of 10/15/99 (sm) (Entered: 10/26/1999)
10/22/1999	218	Letter to the Court dated 10/22/99 by William J. Wade, Esq. RE: Dft. intends to file a response to pltf's motion for permanent injunction according to Local Rule 7.1.2. (sm) (Entered: 10/28/1999)
11/03/1999	219	RESPONSE Filed by Motorola Inc. [204-1] motion for Permanent

		Injunction - Reply Brief due 11/10/99 (sm) (Entered: 11/04/1999)
11/10/1999	220	REPLY IN SUPPORT Filed by Power Integrations [204-1] motion for Permanent Injunction (sm) (Entered: 11/12/1999)
11/10/1999	221	Letter to the Court dated 11/10/99 by William J. Marsden, Jr., Esq. RE: Briefing on Pltf's motion for permanent injunction is completed and are available for a hearing or teleconference. Pltf. also renews their request for entry of judgment. (sm) (Entered: 11/12/1999)
11/12/1999	222	Letter to the Court dated 11/12/99 by William J. Marsden, Jr., Esq. RE: Pltf's list of exhibits and partial transcripts that should be under seal. (sm) (Entered: 11/15/1999)
11/12/1999	223	ORDER, set Telephone Conference for 12:30 11/18/99 (signed by Judge Joseph J. Farnan Jr.) copies to: counsel (sm) (Entered: 11/15/1999)
12/02/1999	224	MEMORANDUM ORDER that the Court will enter judgment on the verdict no later than 12/2/99. The Dft. will have the time allotted by the rules to address the verdict through post-trial motions. During the period between entry of judgment and the deadline for filing post-trial motions, the parties shall submit to the Court a letter outlining their view on the status and need for further litigation concerning the prosecution history estoppel issue and the creation of ON Semiconductor. Upon filing of any post-trial motions, the Court will review the briefs of the parties and at that juncture determine if the permanent injunction issue is ripe. (signed by Judge Joseph J. Farnan Jr.) copies to: counsel (sm) (Entered: 12/07/1999)
12/02/1999	225	JUDGMENT for Power Integrations against Motorola Inc. (signed by Judge Joseph J. Farnan Jr.) copies to: counsel (sm) (Entered: 12/07/1999)
12/02/1999		JUDGMENT registered against defendant Motorola Inc. (sm) (Entered: 12/07/1999)
12/06/1999	226	Copy of letter to Leonard A. Dibbs dated 12/6/99 by William J. Marsden, Jr., Esq. RE: Pltf's request pursuant to pretrial order to place certain transcript testimony under seal. (sm) (Entered: 12/09/1999)
12/06/1999	227	TRANSCRIPT (Volume G, Certain pages) filed [0-0] jury trial for dates of 10/13/99 (SEALED) (sm) (Entered: 12/09/1999)
12/06/1999	228	TRANSCRIPT (Volume H, certain pages) filed [0-0] jury trial for dates of 10/14/99 (SEALED) (sm) (Entered: 12/09/1999)
12/14/1999	229	Letter to the Court dated 12/14/99 by William J. Wade, Esq. RE: Dft's response to the Court's Memorandum Order dated 12/2/99 regarding the parties' view on the status and need for further litigation

		concerning the prosecution history and the creation of On Semiconductor. (sm) (Entered: 12/17/1999)
12/16/1999	230	Letter to the Court dated 12/16/99 by William J. Marsden, Jr., Esq. RE: Pltf's response to the Court's Memorandum Order dated 12/2/99 and Mr. Wade's letter of 12/14/99. (sm) (Entered: 12/21/1999)
12/16/1999	231	MOTION by Power Integrations with Proposed Order for Attorney Fees, Treble Damages, and Prejudgment Interest Answer Brief due 12/30/99 re: [231-1] motion (sm) (Entered: 12/21/1999)
12/16/1999	232	RENEWAL OF MOTION by Power Integrations with Proposed Order for Judgment as a Matter of Law , and alternatively for New Trial, That Motorola Has Infringed The '178 Patent Answer Brief due 12/30/99 re: [232-1] motion, Answer Brief due 12/30/99 re: [232-2] motion (sm) (Entered: 12/21/1999)
12/16/1999	233	MEMORANDUM IN SUPPORT Filed by Power Integrations [232-1] motion for Judgment as a Matter of Law, [232-2] motion for New Trial, That Motorola Has Infringed The '178 Patent (sm) (Entered: 12/21/1999)
12/16/1999	234	Declaration of William J. Marsden, Jr. In Support Of Pltfs' Motion For JMOL, or a New Trial On Infringement of the '178 Patent (sm) (Entered: 12/21/1999)
12/16/1999	235	MOTION by Motorola Inc. For Stay of Execution of Judgment Pursuant to F.R.C.P. 62(B) Answer Brief due 12/30/99 re: [235-1] motion (sm) (Entered: 12/21/1999)
12/16/1999	236	BRIEF IN SUPPORT Filed by Motorola Inc. For Judgment as a Matter of Law, or, in the Alternative, For New Trial RE: Damages (SEALED) (sm) (Entered: 12/21/1999)
12/16/1999	237	BRIEF IN SUPPORT Filed by Motorola Inc. of its Motion For Judgment as a Matter of Law, or in the Alternative, New Trial on Willfulness (sm) (Entered: 12/21/1999)
12/16/1999	238	BRIEF IN SUPPORT Filed by Motorola Inc. of its Motion For Judgment as a Matter of Law, or in the Alternative a New Trial on Liability For Infringement of the '381 Patent (sm) (Entered: 12/21/1999)
12/16/1999	239	LODGED Copy of Trial Exhibit 2030 With Pages Consecutively Numbered For The Court's Convenience Filed by Motorola Inc. (sm) (Entered: 12/21/1999)
12/17/1999	240	Letter to the Court dated 12/17/99 by William J. Wade, Esq. RE: Enclosed compendium of exhibit binders. (sm) (Entered: 12/21/1999)

12/17/1999	241	COMPENDIUM OF Exhibits For The Court's Convenience Filed by Motorola Inc. (sm) (Entered: 12/21/1999)
12/20/1999		Deadline updated; set Telephone Conference for 2:30 12/20/99 per calendar notice. (sm) (Entered: 01/03/2000)
12/20/1999		Tele-conference held (Farnan, J), B. Gaffigan, rptr; The motion to stay execution of judgment is granted. (sm) (Entered: 01/03/2000)
12/21/1999	242	Letter to the Clerk of the Court dated 12/21/99 by William J. Wade, Esq. RE: Enclosed corrected pages for dft's brief in support of its motion for judgment as a matter of law (D.I. 238) filed 12/16/99. (sm) (Entered: 01/04/2000)
12/23/1999	243	STIPULATION with proposed order Extending Time to file answering briefs to 1/25/00 and reply briefs to 2/22/00 on the following post-trial motions: 1) Pltf's Motion for attorney fees, treble damages and prejudgment interest 2) Pltf's renewed motion for judgment as a matter of law or a new trial that dft. has infringed the '178 patent 3) Dft's motion for judgment as a matter of law or a new trial on damages 4) Dft's motion for judgment as a matter of law or a new trial on willfulness, and 5) Dft's motion for judgment as a matter of law or a new trial on liability for infringement of the '381 patent. (sm) Modified on 01/04/2000 (Entered: 01/04/2000)
12/23/1999	244	Steno Notes for 12/20/99 teleconference, B. Gaffigan, rptr. (sm) (Entered: 01/04/2000)
12/23/1999	245	TRANSCRIPT filed [0-0] telephone conference for dates of 12/20/99, B. Gaffigan, rptr. (sm) (Entered: 01/04/2000)
12/27/1999	246	UNDERTAKING of Motorola Inc. (sm) (Entered: 01/05/2000)
12/29/1999		So Ordered GRANTING [243-1] stipulation reset Answer Brief Deadline to 1/25/00 re: [232-1] motion for Judgment as a Matter of Law, 1/25/00 re: [232-2] motion for New Trial, That Motorola Has Infringed The '178 Patent, 1/25/00 re: [231-1] motion for Attorney Fees, Treble Damages, and Prejudgment Interest , set Reply Brief Deadline to 2/22/00 re: [232-1] motion for Judgment as a Matter of Law, 2/22/00 re: [232-2] motion for New Trial, That Motorola Has Infringed The '178 Patent, 2/22/00 re: [231-1] motion for Attorney Fees, Treble Damages, and Prejudgment Interest (signed by Judge Joseph J. Farnan Jr.) Notice to all parties. (sm) (Entered: 01/04/2000)
12/30/1999	247	ORDER that Dft's [235-1] motion For Stay of Execution of Judgment Pursuant to F.R.C.P. 62(B) is GRANTED. Dft. shall file a document undertaking to pay the judgment if its post trial motions are unsuccessful. (signed by Judge Joseph J. Farnan Jr.) copies to: counsel (sm) (Entered: 01/05/2000)

01/26/2000	248	Stipulation and Order Extending Time Filed [232-1] motion for Judgment as a Matter of Law, [232-2] motion for New Trial, That Motorola Has Infringed The '178 Patent, [231-1] motion for Attorney Fees, Treble Damages, and Prejudgment Interest, [190-1] motion for Judgment as a Matter of Law That (1) Motorola Infringes the Power Integrations Patents; (2) Power Integrations' Patents are not Invalid; (3) Motorola Willfully Infringes the Power Integrations Patents; (4) Power Integrations Does Not Infringe Motorola's Patents; and (5) Power Integrations Does not Wilfully Infringe Motorola's Patents: Answer Briefs due 2/1/00 and Reply Briefs due 2/29/00. (sm) (Entered: 01/27/2000)
01/28/2000		So Ordered Stipulated Brief Schedule re: [232-1] motion for Judgment as a Matter of Law Answer Brief due 2/1/00 Reply Brief due 2/29/00, [232-2] motion for New Trial, That Motorola Has Infringed The '178 Patent Answer Brief due 2/1/00 Reply Brief due 2/29/00, [231-1] motion for Attorney Fees, Treble Damages, and Prejudgment Interest Answer Brief due 2/1/00 Reply Brief due 2/29/00, [190-1] motion for Judgment as a Matter of Law That (1) Motorola Infringes the Power Integrations Patents; (2) Power Integrations' Patents are not Invalid; (3) Motorola Willfully Infringes the Power Integrations Patents; (4) Power Integrations Does Not Infringe Motorola's Patents; and (5) Power Integrations Does not Wilfully Infringe Motorola's Patents Answer Brief due 2/1/00 Reply Brief due 2/29/00 (signed by Judge Joseph J. Farnan Jr.) (sm) (Entered: 02/01/2000)
02/01/2000	249	Stipulated Brief Schedule Filed [232-1] motion for Judgment as a Matter of Law, [232-2] motion for New Trial, That Motorola Has Infringed The '178 Patent, [231-1] motion for Attorney Fees, Treble Damages, and Prejudgment Interest, [190-1] motion for Judgment as a Matter of Law That (1) Motorola Infringes the Power Integrations Patents; (2) Power Integrations' Patents are not Invalid; (3) Motorola Willfully Infringes the Power Integrations Patents; (4) Power Integrations Does Not Infringe Motorola's Patents; and (5) Power Integrations Does not Wilfully Infringe Motorola's Patents: Answering briefs are due by 2/15/00 and reply briefs due 3/14/00. (sm) (Entered: 02/03/2000)
02/04/2000		So Ordered Stipulated Brief Schedule re: [190-1] motion for Judgment as a Matter of Law That (1) Motorola Infringes the Power Integrations Patents; (2) Power Integrations' Patents are not Invalid; (3) Motorola Willfully Infringes the Power Integrations Patents; (4) Power Integrations Does Not Infringe Motorola's Patents; and (5) Power Integrations Does not Wilfully Infringe Motorola's Patents Answer Brief due 2/15/00 Reply Brief due 3/14/00, [232-1] motion for Judgment as a Matter of Law Answer Brief due 2/15/00 Reply Brief due 3/14/00, [232-2] motion for New Trial, That Motorola Has

		Infringed The '178 Patent Answer Brief due 2/15/00 Reply Brief due 3/14/00, [231-1] motion for Attorney Fees, Treble Damages, and Prejudgment Interest Answer Brief due 2/15/00 Reply Brief due 3/14/00 (signed by Judge Joseph J. Farnan Jr.) (sm) (Entered: 02/09/2000)
02/14/2000	250	Stipulated Brief Schedule with proposed order Filed [232-1] motion for Judgment as a Matter of Law, [232-2] motion for New Trial, That Motorola Has Infringed The '178 Patent, [231-1] motion for Attorney Fees, Treble Damages, and Prejudgment Interest, [190-1] motion for Judgment as a Matter of Law That (1) Motorola Infringes the Power Integrations Patents; (2) Power Integrations' Patents are not Invalid; (3) Motorola Willfully Infringes the Power Integrations Patents; (4) Power Integrations Does Not Infringe Motorola's Patents; and (5) Power Integrations Does not Wilfully Infringe Motorola's Patents; Answering briefs due 2/29/00 and reply briefs due 3/28/00. (sm) (Entered: 02/16/2000)
02/23/2000		So Ordered Stipulated Brief Schedule re: [232-1] motion for Judgment as a Matter of Law Answer Brief due 2/29/00 Reply Brief due 3/28/00, [232-2] motion for New Trial, That Motorola Has Infringed The '178 Patent Answer Brief due 2/29/00 Reply Brief due 3/28/00, [231-1] motion for Attorney Fees, Treble Damages, and Prejudgment Interest Answer Brief due 2/29/00 Reply Brief due 3/28/00, [190-1] motion for Judgment as a Matter of Law That (1) Motorola Infringes the Power Integrations Patents; (2) Power Integrations' Patents are not Invalid; (3) Motorola Willfully Infringes the Power Integrations Patents; (4) Power Integrations Does Not Infringe Motorola's Patents; and (5) Power Integrations Does not Wilfully Infringe Motorola's Patents Answer Brief due 2/29/00 Reply Brief due 3/28/00 (signed by Judge Joseph J. Farnan Jr.) (sm) (Entered: 02/23/2000)
02/28/2000	251	Stipulated Brief Schedule with proposed order Filed [232-1] motion for Judgment as a Matter of Law, [232-2] motion for New Trial, That Motorola Has Infringed The '178 Patent, [231-1] motion for Attorney Fees, Treble Damages, and Prejudgment Interest, [190-1] motion for Judgment as a Matter of Law That (1) Motorola Infringes the Power Integrations Patents; (2) Power Integrations' Patents are not Invalid; (3) Motorola Willfully Infringes the Power Integrations Patents; (4) Power Integrations Does Not Infringe Motorola's Patents; and (5) Power Integrations Does not Wilfully Infringe Motorola's Patents; Answering briefs due 3/7/00 and reply briefs due 4/4/00. (sm) (Entered: 03/01/2000)
03/02/2000		So Ordered Stipulated Brief Schedule re: [232-1] motion for Judgment as a Matter of Law Answer Brief due 3/7/00 Reply Brief due 4/4/00, [232-2] motion for New Trial, That Motorola Has Infringed The '178

		Patent Answer Brief due 3/7/00 Reply Brief due 4/4/00, [231-1] motion for Attorney Fees, Treble Damages, and Prejudgment Interest Answer Brief due 3/7/00 Reply Brief due 4/4/00, [190-1] motion for Judgment as a Matter of Law That (1) Motorola Infringes the Power Integrations Patents; (2) Power Integrations' Patents are not Invalid; (3) Motorola Willfully Infringes the Power Integrations Patents; (4) Power Integrations Does Not Infringe Motorola's Patents; and (5) Power Integrations Does not Wilfully Infringe Motorola's Patents Answer Brief due 3/7/00 Reply Brief due 4/4/00 (signed by Judge Joseph J. Farnan Jr.) (sm) (Entered: 03/06/2000)
03/06/2000	252	Stipulated Brief Schedule with proposed order Filed [232-1] motion for Judgment as a Matter of Law, [232-2] motion for New Trial, That Motorola Has Infringed The '178 Patent, [231-1] motion for Attorney Fees, Treble Damages, and Prejudgment Interest, [190-1] motion for Judgment as a Matter of Law That (1) Motorola Infringes the Power Integrations Patents; (2) Power Integrations' Patents are not Invalid; (3) Motorola Willfully Infringes the Power Integrations Patents; (4) Power Integrations Does Not Infringe Motorola's Patents; and (5) Power Integrations Does not Wilfully Infringe Motorola's Patents; Answering briefs due 3/14/00 and Reply briefs due 4/11/00. (sm) (Entered: 03/07/2000)
03/13/2000	253	Stipulated Brief Schedule with proposed order Filed [232-1] motion for Judgment as a Matter of Law, [232-2] motion for New Trial, That Motorola Has Infringed The '178 Patent, [231-1] motion for Attorney Fees, Treble Damages, and Prejudgment Interest, [190-1] motion for Judgment as a Matter of Law That (1) Motorola Infringes the Power Integrations Patents; (2) Power Integrations' Patents are not Invalid; (3) Motorola Willfully Infringes the Power Integrations Patents; (4) Power Integrations Does Not Infringe Motorola's Patents; and (5) Power Integrations Does not Wilfully Infringe Motorola's Patents; Answering briefs due 3/21/00 and reply briefs due 4/18/00. (sm) (Entered: 03/15/2000)
03/14/2000		So Ordered Stipulated Brief Schedule re: [232-1] motion for Judgment as a Matter of Law Answer Brief due 3/14/00 Reply Brief due 4/11/00, [232-2] motion for New Trial, That Motorola Has Infringed The '178 Patent Answer Brief due 3/14/00 Reply Brief due 4/11/00, [231-1] motion for Attorney Fees, Treble Damages, and Prejudgment Interest Answer Brief due 3/14/00 Reply Brief due 4/11/00, [190-1] motion for Judgment as a Matter of Law That (1) Motorola Infringes the Power Integrations Patents; (2) Power Integrations' Patents are not Invalid; (3) Motorola Willfully Infringes the Power Integrations Patents; (4) Power Integrations Does Not Infringe Motorola's Patents; and (5) Power Integrations Does not Wilfully Infringe Motorola's Patents Answer Brief due 3/14/00 Reply Brief due 4/11/00 (signed by

		Judge Joseph J. Farnan Jr.) (sm) (Entered: 03/15/2000)
03/15/2000		So Ordered Stipulated Brief Schedule re: [232-1] motion for Judgment as a Matter of Law Answer Brief due 3/21/00 Reply Brief due 4/18/00, [232-2] motion for New Trial, That Motorola Has Infringed The '178 Patent Answer Brief due 3/21/00 Reply Brief due 4/18/00, [231-1] motion for Attorney Fees, Treble Damages, and Prejudgment Interest Answer Brief due 3/21/00 Reply Brief due 4/18/00, [190-1] motion for Judgment as a Matter of Law That (1) Motorola Infringes the Power Integrations Patents; (2) Power Integrations' Patents are not Invalid; (3) Motorola Willfully Infringes the Power Integrations Patents; (4) Power Integrations Does Not Infringe Motorola's Patents; and (5) Power Integrations Does not Wilfully Infringe Motorola's Patents Answer Brief due 3/21/00 Reply Brief due 4/18/00 (signed by Judge Joseph J. Farnan Jr.) (sm) (Entered: 03/21/2000)
03/21/2000	254	Joint Letter to the Court dated 3/21/00 by William J. Marsden, Jr., Esq. and William J. Wade, Esq. RE: The parties having reached a settlement, enclosed are documents for filing and execution by the Court. (sm) (Entered: 03/23/2000)
03/21/2000	255	NOTICE of Withdrawal of Pending Post-Trial Motions by Motorola Inc. (sm) (Entered: 03/23/2000)
03/21/2000	256	JOINT STIPULATION and Injunction Order with proposed order (sm) (Entered: 03/23/2000)
03/21/2000	257	JOINT MOTION by Power Integrations, Motorola Inc. to Enter Amended [225-1] Final Judgment re: [257-1] joint motion (sm) (Entered: 03/23/2000)
03/21/2000	258	JOINT MOTION by Power Integrations, Motorola Inc. to Lift Stay of Execution of Judgment re: [258-1] joint motion (sm) (Entered: 03/23/2000)
03/27/2000		So Ordered GRANTING [256-1] stipulation (signed by Judge Joseph J. Farnan Jr.) Notice to all parties. (sm) (Entered: 03/28/2000)
03/27/2000		So Ordered GRANTING [257-1] joint motion to Enter Amended [225-1] Final Judgment Vacating [225-1] judgment order, including specifically questions 5-9 concerning the infringement of Power Integrations' '178 patent by Motorola , Vacating the Court's construction of the claims of the '178 patent made during its charge to the jury, set forth in the trial transcript at p. 1841 ln. 24 to p. 1843 ln. 13 (D.I. 195 at pp. 17-18) , all other portions of the Court's 12/2/99 judgment not addressed above, including specifically the underlying findings that Motorola has willfully induced and contributed to infringement of Power Integrations' '381 patent, the award of $32.3

		million in compensatory damages to Power Integrations, and the findings that Power Integrations has not infringed any asserted Motorola patent and that Motorola's U.S. Patent Nos. 4,450,367 and 4,342,926 are invalid, remain in full force and effect and are unaffected by this Order. (signed by Judge Joseph J. Farnan Jr.) Notice to all parties. (sm) (Entered: 03/28/2000)
03/27/2000		AMENDED FINAL JUDGMENT for Power Integrations against Motorola Inc. (ATTACHED AS EXHIBIT 2 to D.I. 257) (signed by Judge Joseph J. Farnan Jr.) copies to: counsel (sm) (Entered: 03/28/2000)
03/27/2000		So Ordered GRANTING [258-1] joint motion to Lift Stay of Execution of Judgment Vacating [247-1] order (signed by Judge Joseph J. Farnan Jr.) Notice to all parties. (sm) (Entered: 03/28/2000)
03/27/2000		JUDGMENT registered against defendant Motorola Inc. (sm) (Entered: 03/28/2000)
03/27/2000		Case closed (sm) (Entered: 03/28/2000)
03/29/2000	259	NOTICE of Withdrawal of Pending Post-Trial Motions by Power Integrations (sm) (Entered: 03/30/2000)
04/03/2000	260	Return Acknowledgment of the return of Pltf's trial exhibits to William J. Marsden, Jr., Esq. at Fish & Richardson, P.C. on 4/4/00. (sm) (Entered: 04/07/2000)
04/03/2000	261	Return Acknowledgment of the return of Dft's trial exhibits to William J. Wade, Esq. at Richards Layton & Finger on 4/4/00. (sm) (Entered: 04/07/2000)
10/16/2000	262	Letter to Counsel dated 10/16/00 by deputy clerk RE: Procedure for claiming sealed documents. (sm) (Entered: 10/17/2000)
10/19/2000	263	Letter to William J. Wade, Esq. at Richards, Layton & Finger RE: Return of sealed documents 59-63, 84, 85, 104, 107, 113-115, 125, 126, 130, 131, 138, 139, 165, 166, 170, 172, 173, 187, 188 and 236. (sm) (Entered: 10/20/2000)
10/26/2000	264	Return Acknowledgment of the return of sealed documents to William J. Marsden, Jr., Esq. at Fish & Richardson, P.C. RE: 119-121, 129, 132, 134, 137, 144, 167, 168, 176-179 and 194. (sm) (Entered: 10/30/2000)
05/07/2002	265	Return Acknowledgment of Receipt of Sealed Documents (D.I. 41, 42, 43, 64, 65, 66 & 86) by William J. Marsden, Jr. on 5/7/02. (ssb) (Entered: 05/07/2002)
05/07/2002	266	LETTER dtd. 5/7/02 from William J. Wade to the Clerk's Office

		confirming that deft. agrees to the release of the pretrial order in this matter to counsel for pltf. (ssb) (Entered: 05/07/2002)
05/10/2002	267	Return Acknowledgment of Receipt of Sealed Documents (D.I. 140) on 5/10/02 by William J. Marsden, Jr. at Fish & Richardson (ssb) (Entered: 05/10/2002)
06/06/2002		DI #210, 227, 228 retained in Clerk's Office for safekeeping (maw) (Entered: 06/06/2002)
05/14/2003	268	ORDER (signed by Judge Joseph J. Farnan Jr.) that the Clerk of Court is directed to destroy all Jury Notes taken by the jurors throughout the trial and Court Exhibits (DI #199). copies to: cnsl. (afb) (Entered: 05/16/2003)

EXHIBIT M

(Special Verdict Form dated September 21, 2007,
Power Integrations v. Fairchild Semiconductor,
U.S. District Court - Delaware - Case No. 04-1371)

We, the jury, unanimously find as follows:

VALIDITY OF POWER INTEGRATIONS' '075 PATENT

1. Do you find by clear and convincing evidence that claim 1 of the '075 Patent is anticipated and therefore invalid? (A "YES" answer is a finding for Fairchild. A "NO" answer to this question is a finding for Power Integrations.)

YES _____ NO X

2. Do you find by clear and convincing evidence that any of the following claims of the '075 Patent would have been obvious to a person of ordinary skill in the art at the time of the invention in view of one or more of the asserted prior art references, and therefore the claim is invalid? (A "YES" answer is a finding for Fairchild. A "NO" answer to this question is a finding for Power Integrations.)

Claim 1: YES _____ NO X

Claim 5: YES _____ NO X

(FORM CONTINUES ON NEXT PAGE)

VALIDITY OF POWER INTEGRATIONS' '876 PATENT

3. Do you find by clear and convincing evidence that Claim 1 of the '876 Patent would have been obvious to a person of ordinary skill in the art at the time of the invention in view of one or more of the asserted prior art references, and therefore the claim is invalid? (A "YES" answer is a finding for Fairchild. A "NO" answer to this question is a finding for Power Integrations.)

YES _____ NO X

VALIDITY OF POWER INTEGRATIONS' '851 PATENT

4. Do you find by clear and convincing evidence that any of the following claims of the '851 Patent would have been obvious to a person of ordinary skill in the art at the time of the invention in view of one or more of the asserted prior art references, and therefore the claim is invalid? (A "YES" answer is a finding for Fairchild. A "NO" answer to this question is a finding for Power Integrations.)

Claim 1: YES _____ NO X

Claim 4: YES _____ NO X

VALIDITY OF POWER INTEGRATIONS' '366 PATENT

5. Do you find by clear and convincing evidence that claim 9 of the '366 Patent is anticipated and therefore invalid? (A "YES" answer is a finding for Fairchild. A "NO" answer to this question is a finding for Power Integrations.)

Claim 9: YES _____ NO X

6. Do you find by clear and convincing evidence that any of the following claims of the '366 Patent would have been obvious to a person of ordinary skill in the art at the time of the invention in view of one or more of the asserted prior art references, and therefore the claim is invalid? (A "YES" answer is a finding for Fairchild. A "NO" answer to this question is a finding for Power Integrations.)

Claim 9:	YES	____	NO	X
Claim 14:	YES	____	NO	X

You must each sign this Verdict Form: Dated: Sept 21, 2007

REDACTED

EXHIBIT N
(Order Granting *Ex Parte* Reexamination Order dated December 21, 2006)

UNITED STATES PATENT AND TRADEMARK OFFICE

UNITED STATES DEPARTMENT OF COMMERCE
United States Patent and Trademark Office
Address: COMMISSIONER FOR PATENTS
P.O. Box 1450
Alexandria, Virginia 22313-1450
www.uspto.gov

APPLICATION NO.	FILING DATE	FIRST NAMED INVENTOR	ATTORNEY DOCKET NO.	CONFIRMATION NO.
90/008,326	11/09/2006	6249876	10414-25	7651

7590 12/21/2006

Bradley J. Bereznak, Esq.
BLAKELY SOKOLOFF TAYLOR & ZAFMAN. LLP
12400 Wilshire Blvd.
Seventh Floor
Los Angeles, CA 90025

EXAMINER	
ART UNIT	PAPER NUMBER

DATE MAILED: 12/21/2006

Please find below and/or attached an Office communication concerning this application or proceeding.

Order Granting / Denying Request For Ex Parte Reexamination	Control No.	Patent Under Reexamination	
	90/008,326	6249876	
	Examiner	Art Unit	
	Margaret Rubin	3992	

--The MAILING DATE of this communication appears on the cover sheet with the correspondence address--

The request for *ex parte* reexamination filed *09 November 2006* has been considered and a determination has been made. An identification of the claims, the references relied upon, and the rationale supporting the determination are attached.

Attachments: a)☐ PTO-892, b)☒ PTO/SB/08, c)☐ Other: _____

1. ☒ The request for *ex parte* reexamination is GRANTED.

RESPONSE TIMES ARE SET AS FOLLOWS:

For Patent Owner's Statement (Optional): TWO MONTHS from the mailing date of this communication (37 CFR 1.530 (b)). **EXTENSIONS OF TIME ARE GOVERNED BY 37 CFR 1.550(c).**

For Requester's Reply (optional): TWO MONTHS from the **date of service** of any timely filed Patent Owner's Statement (37 CFR 1.535). **NO EXTENSION OF THIS TIME PERIOD IS PERMITTED.** If Patent Owner does not file a timely statement under 37 CFR 1.530(b), then no reply by requester is permitted.

2. ☐ The request for *ex parte* reexamination is DENIED.

This decision is not appealable (35 U.S.C. 303(c)). Requester may seek review by petition to the Commissioner under 37 CFR 1.181 within ONE MONTH from the mailing date of this communication (37 CFR 1.515(c)). **EXTENSION OF TIME TO FILE SUCH A PETITION UNDER 37 CFR 1.181 ARE AVAILABLE ONLY BY PETITION TO SUSPEND OR WAIVE THE REGULATIONS UNDER 37 CFR 1.183.**

In due course, a refund under 37 CFR 1.26 (c) will be made to requester:

a) ☐ by Treasury check or,

b) ☐ by credit to Deposit Account No. _____, or

c) ☐ by credit to a credit card account, unless otherwise notified (35 U.S.C. 303(c)).

Margaret Rubin
Primary Examiner
Art Unit: 3992

cc:Requester (if third party requester)

DECISION GRANTING *EX PARTE* REEXAMINATION

Summary

Substantial new questions of patentability affecting claims 1 and 17-19 of United States Patent No. 6,249,876 (hereafter "the base patent") are raised by the following references:

1.) Acoustic Noise Reduction in Sinusoidal PWM Drives Using A Randomly Modulated Carrier", IEEE Transactions on Power Electronics, Vol. 6, No. 3, p.356-363 (published July 1991) by T.G. Habetler and D. M. Divan (hereafter "Habetler");

2.) U.S. Patent No. 4,638,417 to Martin; and

3.) "Programmed Pulsewidth Modulated Waveforms for Electromagnetic Interference Mitigation in DC-DC Converters"; IEEE Transactions on Power Electronics, Vol. 8, No.4 (October 1993) by A.C. Wang and S.R. Sanders, pp. 596-605 (hereafter "Wang").

Issues Raised by Requester

Although the merits of the rejections suggested in the request are not decided herein, it is noted that the Requester proposes that the references supplied raise substantial new questions of patentability when viewed in the following manner:

1.) Claim 1 is anticipated by Martin;

2.) Claims 1, 17, 18, and 19 are anticipated by Habetler; and

3.) Claim 1 is anticipated by Wang.

Background

The base patent issued from United States Patent Application No. 09/192,959 (hereafter "the base application"). It is noted that the non-final rejection dated October 16, 2000 states that claims 1-10 included allowable subject matter but reasons therefor were not provided. Further, the Notice of Allowance mailed January 20, 2001 did not include a Statement of Reasons for Allowance.

In summary, the prosecution history does not provide a clear record of the reasons the base patent was allowed.

Issues

Martin

It is agreed that Martin raises an SNQ for claim 1. More particularly, Requester has provided plausible item-matching for a number of limitations of claim 1 on pages 7-10 of the request. In view of the fact that the prosecution history does not provide a clear record of the reasons the base patent was allowed, the teachings presented in the request cannot be judged as merely cumulative.

Such teachings are not cumulative to any written discussion on the record of the teachings of the prior art, were not previously considered nor addressed during a prior examination and the same question of patentability was not the subject of a final holding of invalidity by Federal Courts.

Wang

It is agreed that Wang raises an SNQ for claim 1. More particularly, Requester has provided plausible item-matching for a number of limitations of claim 1 on pages 21-23 of the request. In view of the fact that the prosecution history does

not provide a clear record of the reasons the base patent was allowed, the teachings presented in the request cannot be judged as merely cumulative.

Such teachings are not cumulative to any written discussion on the record of the teachings of the prior art, were not previously considered nor addressed during a prior examination and the same question of patentability was not the subject of a final holding of invalidity by Federal Courts.

Habetler

It is agreed that Habetler raises an SNQ for claim 1, 17, 18, and 19. More particularly, Requester has provided plausible item-matching for a number of limitations of claim 1 and 17 on pages 12-16 of the request. In view of the fact that the prosecution history does not provide a clear record of the reasons the base patent was allowed, the teachings presented in the request cannot be judged as merely cumulative. By raising an SNQ with regard to independent claim 17, an SNQ is also raised for the dependent claims 18-19 which come freighted with the limitations of the claim from which they stem.

Such teachings are not cumulative to any written discussion on the record of the teachings of the prior art, were not previously considered nor addressed during a prior examination and the same question of patentability was not the subject of a final holding of invalidity by Federal Courts.

Conclusion

Since Requester did not request reexamination of claims 2-16 and 20-32 and did not assert the existence of a substantial new question of patentability (SNQ) for such claims, these claims will not be reexamined unless at the discretion of the Office.

Extensions of time under 37 CFR 1.136(a) will not be permitted in these proceedings because the provisions of 37 CFR 1.136 apply only to "an applicant" and not to parties in a reexamination proceeding. Additionally, 35 U.S.C. 305 requires that *ex parte* reexamination proceedings "will be conducted with special dispatch" (37 CFR 1.550(a)). Extensions of time in *ex parte* reexamination proceedings are provided for in 37 CFR 1.550(c).

The patent owner is reminded of the continuing responsibility under 37 CFR 1.565(a) to apprise the Office of any litigation activity, or other prior or concurrent proceeding, involving Patent No 6,249,876 throughout the course of this reexamination proceeding. The third party requester is also reminded of the ability to similarly apprise the Office of any such activity or proceeding throughout the course of this reexamination proceeding. See MPEP §§ 2207, 2282 and 2286.

Please mail any communications to:

Attn: Mail Stop "Ex Parte Reexam"
Central Reexamination Unit
Commissioner for Patents
P. O. Box 1450
Alexandria VA 22313-1450

Please FAX any communications to:
(571) 273-9900
Central Reexamination Unit

Please hand-deliver any communications to:

Customer Service Window
Attn: Central Reexamination Unit
Randolph Building, Lobby Level
401 Dulany Street
Alexandria, VA 22314

Any inquiry concerning this communication or earlier communications from the Reexamination Legal Advisor or Examiner, or as to the status of this proceeding, should be directed to the Central Reexamination Unit at telephone number (571) 272-7705.

Margaret Rubin
Primary Examiner
Central Reexamination Unit 3992
(571) 272-1756

conferees:

BEST AVAILABLE COPY

Please type a plus sign (+) in this box [+]

71338 U.S. PTO

PTO/SB/08A (10-96)

Approved for use through 10/31/99. OMB 0651-0031

Patent and Trademark Office: U.S. DEPARTMENT OF COMMERCE

Under the Paperwork Reduction Act of 1995, no persons are required to respond to a collection of information unless it contains a valid OMB control number.

71338 U.S. PTO 00008526

449A/PTO

11/09/06

INFORMATION DISCLOSURE STATEMENT BY APPLICANT

(use as many sheets as necessary)

Sheet 1 of 1

Complete if Known	
Patent Number	6,249,876
Issue Date	June 19, 2001
First Named Inventor	Balu Balakirshnan
Group Art Unit	3992
Examiner Name	Rubin
Attorney Docket Number	10414-25

11/09/06

U.S. PATENT DOCUMENTS

Examiner Initials	Cite No.[1]	U.S. Patent Document Number	Kind Code[2]	Name of Patentee or Applicant of Cited Document	Date of Patent of Cited Documents MM-DD-YYYY
MR	AA	4,638,417		Hubert C. Martin, Jr. ,et al.	January 20, 1987
	AB				

FOREIGN PATENT DOCUMENTS

Examiner Initials	Cite No.[1]	Foreign Patent Document Office[3]	Number[4]	Kind Code[5]	Name of Patentee or Applicant of Cited Document	Date of Publications of Cited Documents MM-DD-YYYY	T[6]
	BA						

OTHER PRIOR ART - NON PATENT LITERATURE DOCUMENTS

Examiner Initials*	Cite No.[1]	Include name of the author (in CAPITAL LETTERS), title of the article (when appropriate), title of the item (book, magazine, journal, serial, symposium, catalog, etc.), date, page(s), volume-issue number(s), publisher, city and/or country where published.	T[2]
MR	CA	Programmed Pulsewidth Modulated Waveforms For Electromagnetic Interference Mitigation In DC-DC Converters", IEEE Transactions on Power Electronics, Vol. 8, No. 4 (published October 1993) by A.C. Wang and S. R. Sanders ("Wang and Sanders") Pages 596 - 605	
MR	CB	Acoustic Noise Reduction In Sinusoidal PWM Drives Using A Randomly Modulated Carrier", IEEE Transactions on Power Electronics, Vol. 6, No. 3, p. 356 (published July 1991) by T.G. Habetler and D.M. Divan ("Habetler and Divan") through p.363	
	CC		

Examiner Signature	MR	Date Considered	12/18/06

*EXAMINER: Initial if reference considered, whether or not citation is in conformance with MPEP 609. Draw line through citation if not in conformance and not considered. Include copy of this form with next communication to applicant.

[1] Unique citation designation number. [2] See attached Kinds of U.S. Patent Documents. [3] Enter Office that issued the document, by the two-letter code (WIPO Standard ST.3). [4] For Japanese patent documents, the indication of the year of the reign of the Emperor must precede the serial number of the patent documents. [5] Kind of document by the appropriate symbols as indicated on the document under WIPO Standard ST. 16 if possible. [6] Applicant is to place a check mark here if English language Translation is attached.

Burden Hour Statement: This form is estimated to take 2.0 hours to complete. Time will vary depending upon the needs of the individual case. Any comments on the amount of time you are required to complete this form should be sent to the Chief Information Officer, Patent and Trademark Office, Washington, DC 20231. DO NOT SEND FEES OR COMPLETED FORMS TO THIS ADDRESS. SEND TO: Assistant Commissioner for Patents, Washington, DC 20231.

EXHIBIT O
(Datasheet AP3700 A)

Data Sheet

LOW POWER PWM CONTROLLER FOR OFF-LINE BATTERY CHARGER AP3700/A

General Description

The AP3700/A is a green-mode pulse width modulation (PWM) controller. It is specially designed for low power applications such as off-line battery chargers, where the needs for low standby power, space saving and low cost are all required. In a battery charger rated 5V/1A, the maximum standby power is only 0.18Watt.

In normal operation, the AP3700/A switches on and off at a fixed switching frequency of 60 kHz. With a current limit capability of 460mA for AP3700 and 500mA for AP3700A, the AP3700/A can directly drive the emitter of high voltage NPN transistor. When output power falls below a given level, the IC enters skip cycle mode to reduce power consumption.

The AP3700/A also features under-voltage lockout, over-current and short circuit protections.

The AP3700/A is available in TO-92 package.

Features

- Current Mode Control with Skip Cycle Capability
- Lower Operating Current: 0.45mA
- Fixed Switching Frequency: 60 kHz
- Frequency Dithering for Low EMI: ±2.5kHz
- Under-Voltage Lockout Protection
- Over-Current Protection
- Internal Short Circuit Protection
- Higher Output Voltage at OUT Terminal
- Low Total Cost Solution

Applications

- Battery Chargers
- Off-Line Power Supplies

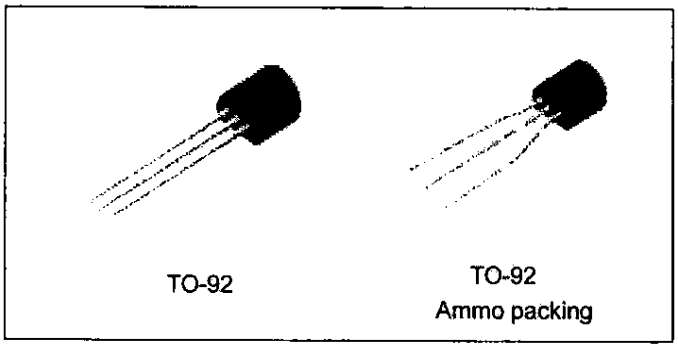

Figure 1. Package Types of AP3700/A

Pin Configuration

Z Package
(TO-92)

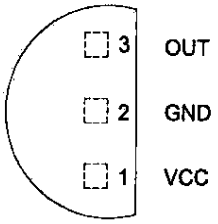

Figure 2. Pin Configuration of AP3700/A (Top View)

Pin Description

Pin Number TO-92	Pin Name	Function
1	VCC	The power supply of the IC, and is generally connected to opto-coupler's emitter
2	GND	Supply ground
3	OUT	The output pin, connected to the emitter of NPN transistor or the source of MOSFET

Functional Block Diagram

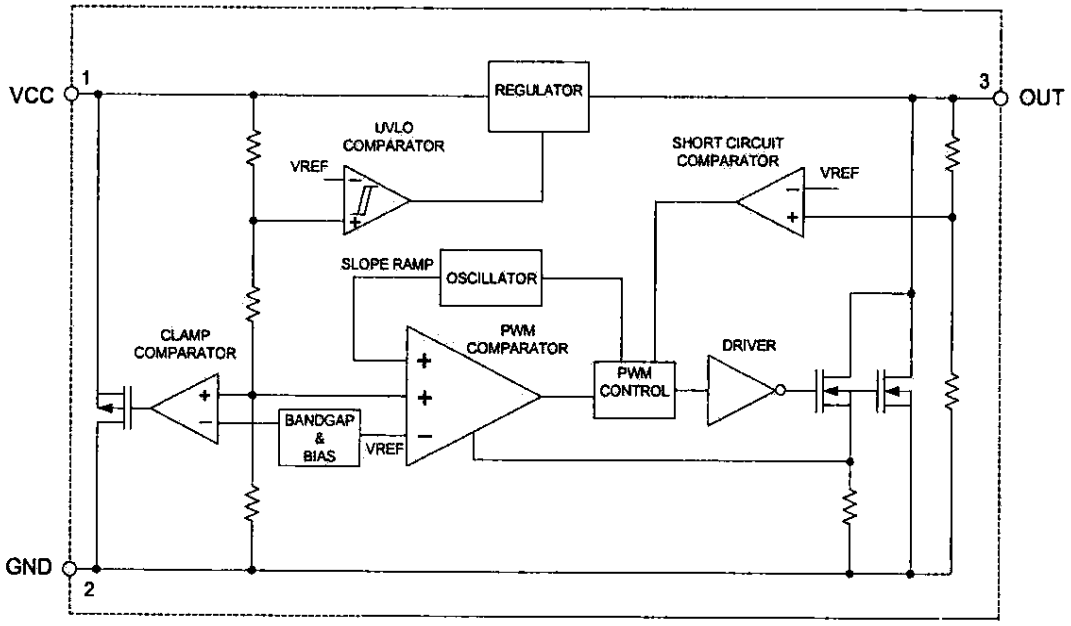

Figure 3. Functional Block Diagram of AP3700/A

Ordering Information

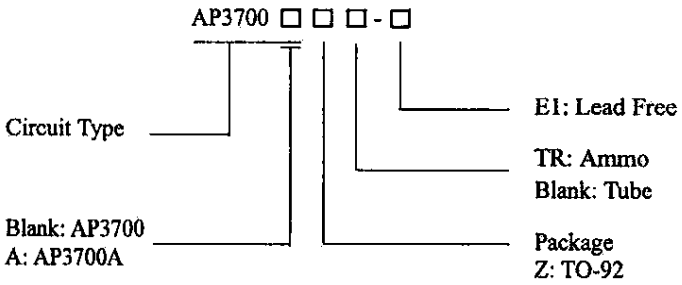

Package	Switching Frequency	Temperature Range	Part Number	Marking ID	Packing Type
TO-92	60kHz	-40 to 85°C	AP3700Z-E1	3700Z-E1	Bulk
			AP3700ZTR-E1	3700Z-E1	Ammo
			AP3700AZ-E1	3700AZ-E1	Bulk
			AP3700AZTR-E1	3700AZ-E1	Ammo

BCD Semiconductor's Pb-free products, as designated with "E1" suffix in the part number, are RoHS compliant.

Absolute Maximum Ratings (Note 1)

Parameter	Value	Unit
Supply Voltage	-0.3 to 6.0	V
Voltage at OUT (Note 2)	-0.3 to 40	V
Output Current at OUT	Internally limited	A
Power Dissipation	0.6	W
Operating Junction Temperature	150	°C
Storage Temperature	-65 to 150	°C
Lead Temperature (Soldering, 10s)	300	°C
ESD (Machine Model)	200	V

Note 1: Stresses greater than those listed under "Absolute Maximum Ratings" may cause permanent damage to the device. These are stress ratings only, and functional operation of the device at these or any other conditions beyond those indicated under "Recommended Operating Conditions" is not implied. Exposure to "Absolute Maximum Ratings" for extended periods may affect device reliability.
Note 2: The Breadown Voltage. The actual operating voltage can not be greater than the value listed here.

Electrical Characteristics

(V_{CC}=4V, T_J=25°C, unless otherwise specified.)

Parameter	Symbol	Conditions		Min	Typ	Max	Unit
UVLO SECTION							
Start-up Voltage	$V_{TH(ST)}$			5.00	5.25	5.50	V
Minimal Operating Voltage	V_{OPR}(min)			3.4	3.65	3.9	V
STANDBY CURRENT SECTION							
Start-up Current (Note 3)	I_{ST}	V_{CC}=4V			0.22	0.4	mA
Operating Current	$I_{CC(OPR)}$				0.45	0.7	
V_{CC} Zener Voltage	V_Z	I_{CC}=10mA		6	6.3		V
Dynamic Impedance	R_{VCC}	V_{CC}=3.8 to 4.8V			18		kΩ
INTERNAL OSCILLATOR							
Switching Frequency	F_{SW}			50	60	75	kHz
Frequency Dither				±2	±2.5	±3	kHz
Temperature Stability					5	8	%
DRIVE OUTPUT SECTION							
OUT Start-up Voltage	V_{ST}				8.5	11	V
Short Circuit Threashold Voltage (Note 4)	V_{SC}				6		V
Rise Time	T_R	C_L=1nF, 15Ω pull-up			60		ns
Fall Time	T_F	C_L=1nF, 15Ω pull-up			30		
Maximum Duty Cycle	D_{MAX}	V_{OPR}(min) + 0.2V		67	75	84	%
Minimum Duty Cycle		V_{CC}=$V_{TH(ST)}$-0.2V			3		
Driver OUT On-Resistance	R_{OUT}	I_{OUT}=0.06A			3		Ω
Switch Off Current (OUT)		Driver off,			20	40	μA
Effective Current Limit	I_{LIM}	V_{CC} = V_{OPR}+0.1V	For AP3700	460			mA
			For AP3700A	500			
OUT Current Coefficient	G_A				-0.3		A/V

Note 3: AP3700/A is an emitter drive controller, the PWM controller will start up only when the voltage on the OUT pin rises up to its threshould value.

Note 4: AP3700/A performs its short circuit function by shutdown the OUT pulse when the OUT pin voltage drops below its short circuit threshold value.

Typical Performance Characteristics

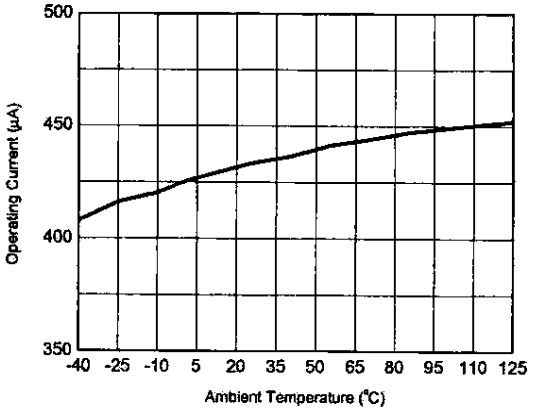

Figure 4. Operating Current vs. Ambient Temperature

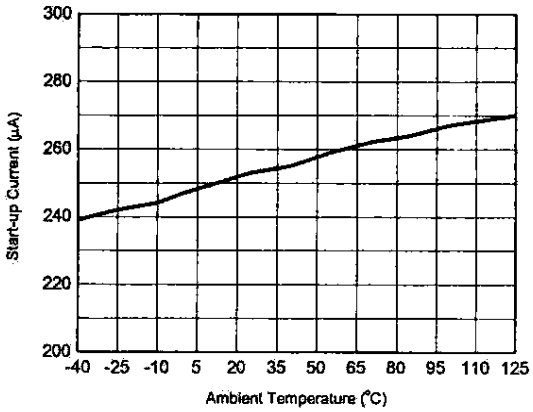

Figure 5. Start-up Current vs. Ambient Temperature

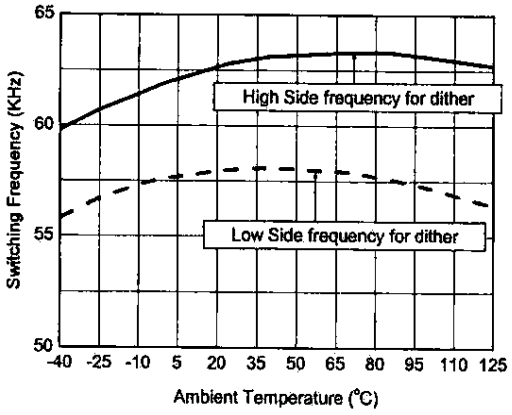

Figure 6. Switching Frequency vs. Ambient Temperature

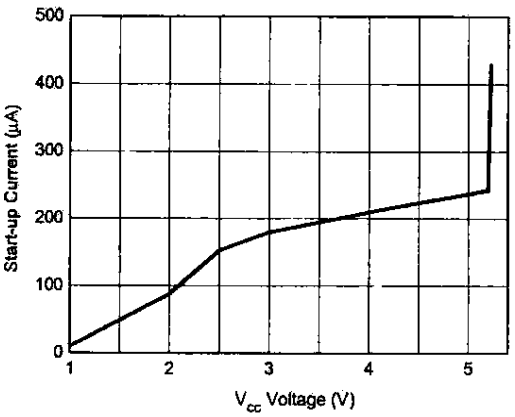

Figure 7. Start-up Current vs. V_{CC} Voltage

Function Description

1. Startup Circuit

Figure 3 is the functional block diagram of AP3700/A, and there are 3 external pins: the VCC pin, the OUT pin and GND pin. In typical application shown by Figure 10, the VCC pin is used for both bias supply and feedback control. The OUT pin directly drives external NPN transistor or MOSFET, and also provides initial bias power for UVLO comparator. When the IC works in PWM mode, the auxiliary winding will supply the V_{CC} enough operating current.

Figure 8 shows the start-up sequence of the V_{CC} and the V_{OUT}.

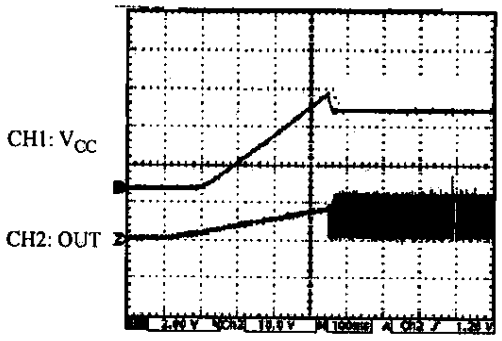

Figure 8. Start-up Sequence of V_{CC} and V_{OUT}

2. V_{CC}/Feedback Control

An opto-coupler and secondary constant voltage/ current controller consists of voltage feedback network. When load is heavy, the voltage on VCC will be lower to enlarge duty cycle; on the contrary, if load drops, the voltage on VCC will rise to reduce duty cycle.

3. Frequency Dither

Frequency dither is performed by periodically spreading a single switching frequency into adjacent frequency band, so the peak energy is spread. This technique can improve EMI by reducing both quasi-peak and average EMI emissions.

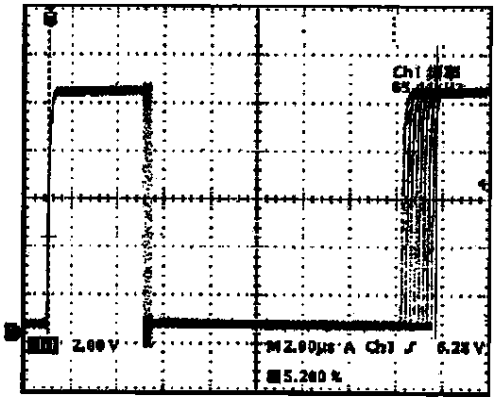

Figure 9. Frequency Dither Influences the Swithcing Cycle

AP3700/A has reference switching frequency of 60 kHz, and its frequency deviation is ±2.5kHz in period of 2ms. Figure 9 shows the frequency dither influence to the waveform .

4. Current Limit Control

The AP3700/A employs current mode control to improve transient response and voltage stability. In Figure 10, the external inductor current through the OUT pin is converted to a voltage by an internal resistor, and this voltage will participate to control duty cycle and peak inductor current.

Typical Application

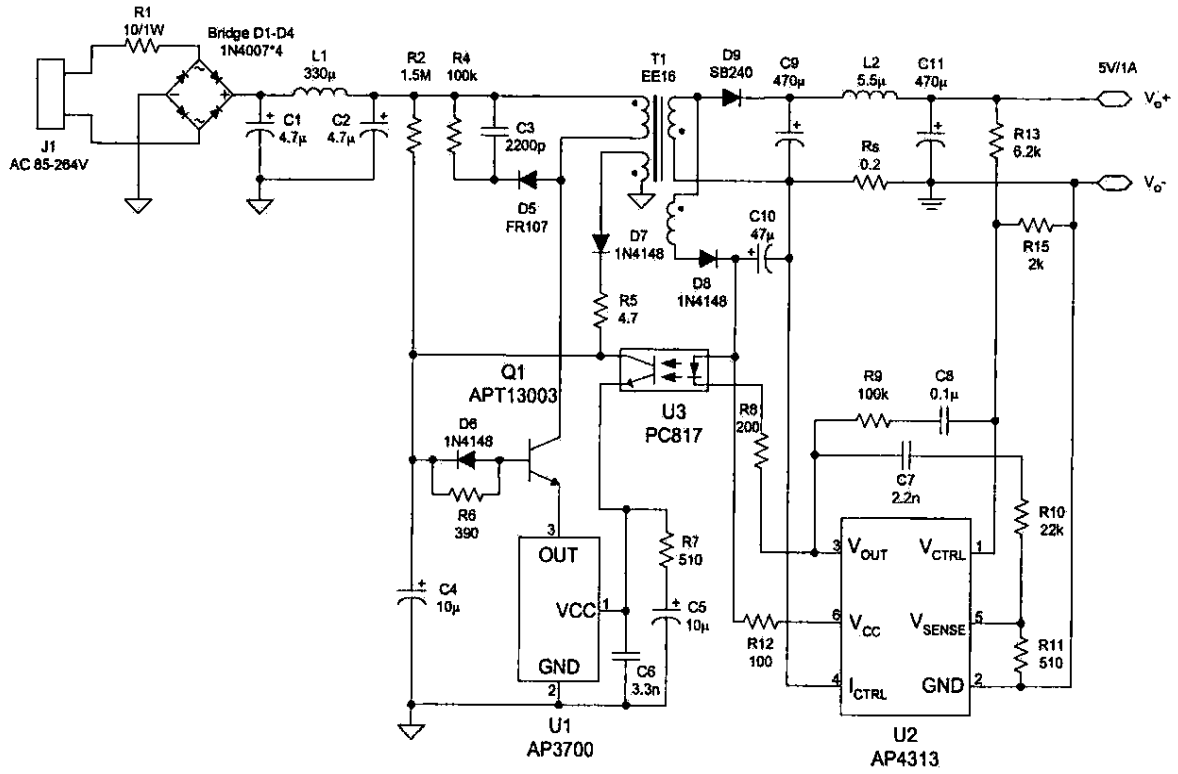

Figure 10. 5V/1A Output for Battery Charger of Mobile Phone

Mechanical Dimensions

TO-92 **Unit: mm(inch)**

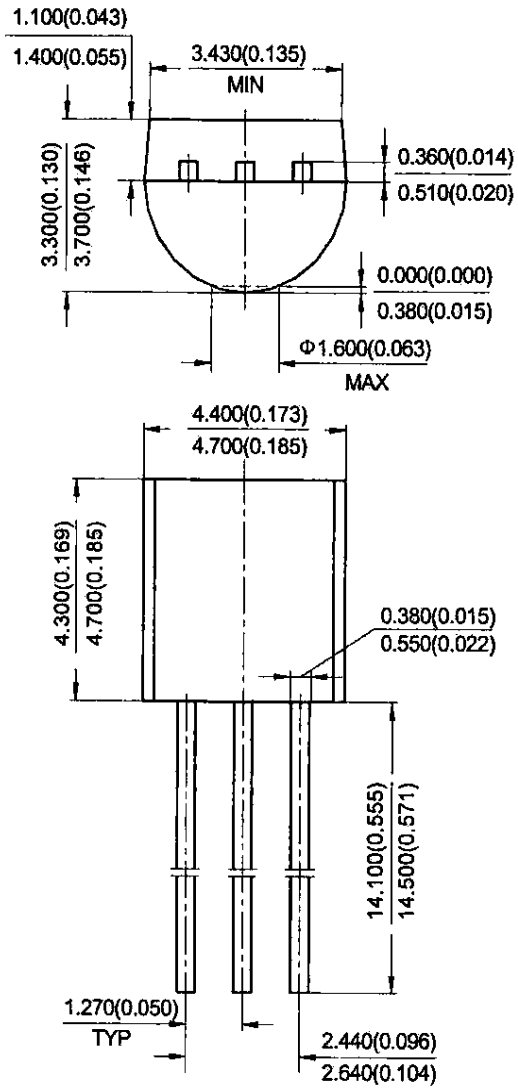

Mechanical Dimensions

TO-92 Ammo Packing **Unit: mm(inch)**

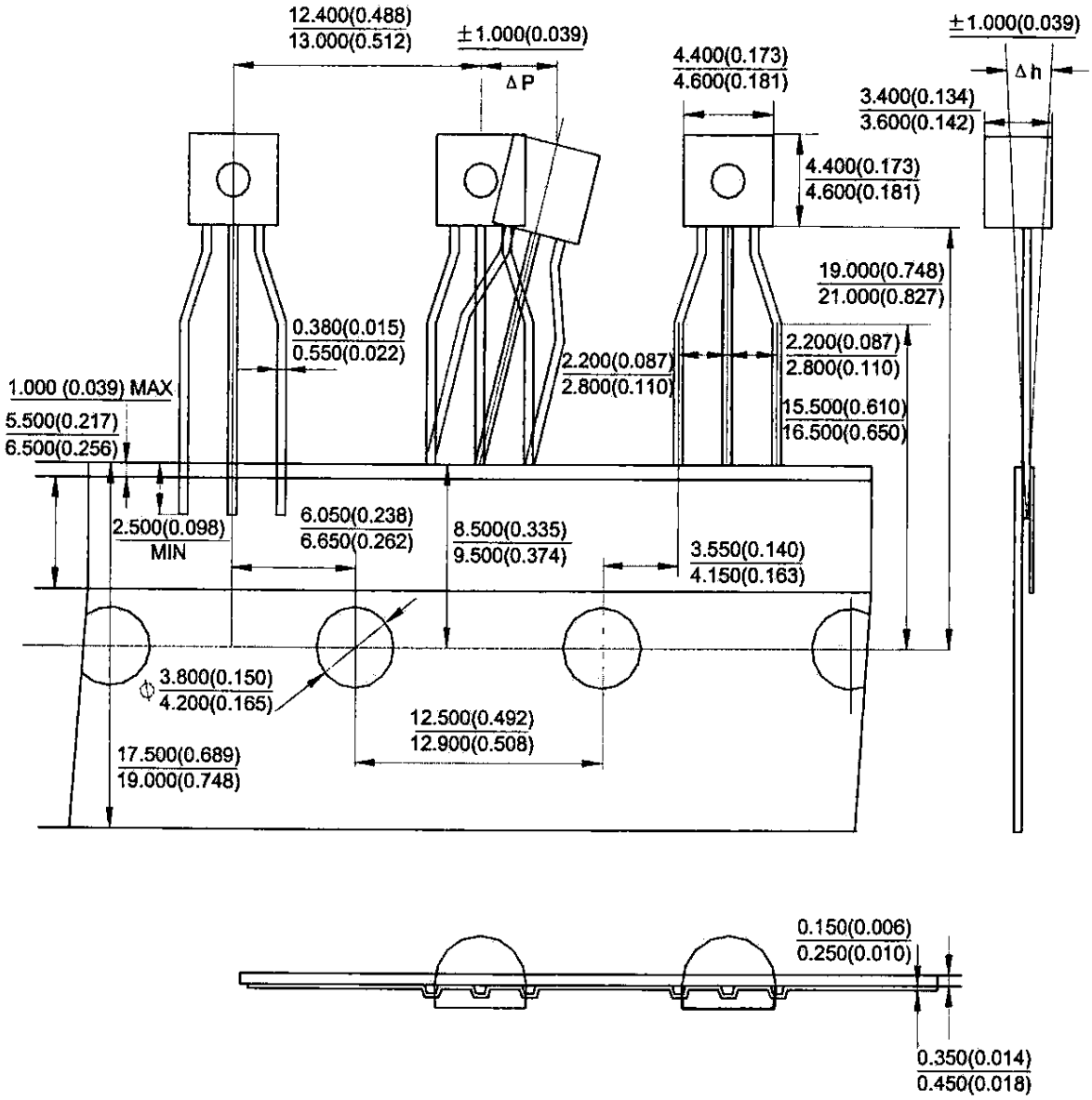



BCD Semiconductor Manufacturing Limited

http://www.bcdsemi.com

IMPORTANT NOTICE

BCD Semiconductor Manufacturing Limited reserves the right to make changes without further notice to any products or specifications herein. BCD Semiconductor Manufacturing Limited does not assume any responsibility for use of any its products for any particular purpose, nor does BCD Semiconductor Manufacturing Limited assume any liability arising out of the application or use of any its products or circuits. BCD Semiconductor Manufacturing Limited does not convey any license under its patent rights or other rights nor the rights of others.

MAIN SITE

BCD Semiconductor Manufacturing Limited
- Wafer Fab
Shanghai SIM-BCD Semiconductor Manufacturing Limited
800, Yi Shan Road, Shanghai 200233, China
Tel: +86-21-6485 1491, Fax: +86-21-5450 0008

BCD Semiconductor Manufacturing Limited
- IC Design Group
Advanced Analog Circuits (Shanghai) Corporation
8F, Zone B, 900, Yi Shan Road, Shanghai 200233, China
Tel: +86-21-6495 9539, Fax: +86-21-6485 9673

REGIONAL SALES OFFICE

Shenzhen Office
Shanghai SIM-BCD Semiconductor Manufacturing Co., Ltd. Shenzhen Office
Advanced Analog Circuits (Shanghai) Corporation Shenzhen Office
Room E, 5F, Noble Center, No.1006, 3rd Fuzhong Road, Futian District, Shenzhen 518026, China
Tel: +86-755-8826 7951
Fax: +86-755-8826 7865

Taiwan Office
BCD Semiconductor (Taiwan) Company Limited
4F, 298-1, Rui Guang Road, Nei-Hu District, Taipei, Taiwan
Tel: +886-2-2656 2808
Fax: +886-2-2656 2806

USA Office
BCD Semiconductor Corporation
30920 Huntwood Ave. Hayward, CA 94544, U.S.A
Tel : +1-510-324-2988
Fax: +1-510-324-2788

EXHIBIT P
(Order on Joint Stipulation Rescheduling Conference dated August 22, 2007, *Power Integrations, Inc. v. BCD Semiconductor, Inc.*, U.S. District Court - Northern California District - Case No. 07-3137)

Frank E. Scherkenbach
(CAB #142549; scherkenbach@fr.com)
FISH & RICHARDSON P.C.
225 Franklin Street
Boston, Massachusetts 02110-2804
Telephone: (617) 542-5070
Facsimile: (617) 542-8906

Howard G. Pollack
(CAB #162897; pollack@fr.com)
Michael R. Headley
(CAB #220834; headley@fr.com)
S. Kameron Parvin
(CAB #232349; parvin@fr.com)
FISH & RICHARDSON P.C.
500 Arguello Street, Suite 500
Redwood City, California 94063
Telephone: (650) 839-5070
Facsimile: (650) 839-5071

Attorneys for Plaintiff
POWER INTEGRATIONS, INC.

Erik R. Puknys
(CAB #190926; erik.puknys@finnegan.com)
FINNEGAN, HENDERSON, FARABOW, GARRETT & DUNNER, L.L.P.
3300 Hillview Ave.
Palo Alto, CA 94304
Telephone: (650) 849-6600
Facsimile: (650) 849-6666

Attorneys for Defendants
BCD SEMICONDUCTOR MANUFACTURING CORPORATION, and SHANGHAI SIM-BCD SEMICONDUCTOR MANUFACTURING, CO., LTD

UNITED STATES DISTRICT COURT

NORTHERN DISTRICT OF CALIFORNIA

(SAN FRANCISCO DIVISION)

POWER INTEGRATIONS, INC., a Delaware corporation,

Plaintiff,

v.

BCD SEMICONDUCTOR MANUFACTURING CORPORATION, a California corporation, SHANGHAI SIM-BCD SEMICONDUCTOR MANUFACTURING, CO., LTD, a China corporation,

Defendants.

No. C 07-03137 WHA

JOINT STIPULATION AND ~~[PROPOSED]~~ ORDER RESCHEDULING CASE MANAGEMENT CONFERENCE

Pursuant to Civil Local Rule 6-2(a) and 6-1(b), Plaintiff Power Integrations, Inc. ("Power Integrations"), and Defendants BCD Semiconductor Manufacturing Corporation and Shanghai SIM-BCD Semiconductor Manufacturing Co., Ltd. ("BCD") hereby stipulate, for the convenience of counsel for the parties, to reschedule the Initial Case Management Conference on Reassignment,

which is currently set for September 20, 2007. The parties request that the Initial Case Management Conference be continued to November 8, 2007 at 11:00 a.m. and that the other deadlines in the initial case management scheduling order be rescheduled accordingly. Specifically, the parties request the following schedule:

Date	Event	Governing Rule
10/18/2007	Last day to: • meet and confer re: initial disclosures, early settlement, ADR process selection, and discovery plan • file the Joint ADR Certification with Stipulation to ADR Process or Notice of Need for ADR Phone Conference	FRCivP 26(f) & ADR L.R. 3-5 Civil L.R. 16-8
11/1/2007	Last day to file Rule 26(f) Report, complete initial disclosures or state objection in Rule 26(f) Report, and file Case Management Statement	FRCivP 26(a)(1) & Civil L.R. 16-9
11/8/2007	INITIAL CASE MANAGEMENT CONFERENCE (CMC) in Courtroom 9, San Francisco at 11:00 am.	Civil L.R. 16-10

The reason for the requested modification in the schedule is that counsel for the parties have trial commitments and travel plans that conflict with the presently scheduled date of September 20, 2007. There have not been any previous time modifications in this case by stipulation, and the only modification by Court order occurred when the Court rescheduled the initial case management conference from September 17, 2007 to September 20, 2007 when the case was assigned to Judge Alsup. Because a Scheduling Order has not yet issued, granting this request for time modification will not impact any scheduled event in the case other than those provided for above.

///

///

///

This stipulation is made without prejudice to seek additional orders from the Court, subject to Court approval.

Dated August 22, 2007

By: /s/
Michael R. Headley
FISH & RICHARDSON P.C.

Attorneys for Plaintiff
POWER INTEGRATIONS, INC.

/s/
Erik R. Puknys
FINNEGAN, HENDERSON, FARABOW, GARRETT & DUNNER, L.L.P.

Attorneys for Defendants
BCD SEMICONDUCTOR MANUFACTURING CORPORATION and SHANGHAI SIM-BCD SEMICONDUCTOR MANUFACTURING, CO., LTD.

Pursuant to General Order No. 45, Section X(B) regarding signatures, I attest under penalty of perjury that concurrence in the filing of this document has been obtained from Erik R. Puknys.

Dated: August 22, 2007

/s/
Michael R. Headley
FISH & RICHARDSON P.C.

Attorney for Plaintiff
POWER INTEGRATIONS, INC.

ORDER

The case management conference is set for September 13, 2007, at 11:00 a.m. A joint case management conference statement is due at seven days prior.

IT IS SO ORDERED.

Dated: August 22, 2007.

UNITED STATES DISTRICT JUDGE

IT IS SO ORDERED
Judge William Alsup

EXHIBIT Q
(*Ex Parte* Application For Continuance Of Initial Case Management Conference, dated August 23, 2007, *Power Integrations, Inc. v. BCD Semiconductor, Inc.*, U.S. District Court - Northern California District - Case No. 07-3137)

Frank E. Scherkenbach (CAB #142549; scherkenbach@fr.com)
FISH & RICHARDSON P.C.
225 Franklin Street
Boston, Massachusetts 02110-2804
Telephone: (617) 542-5070
Facsimile: (617) 542-8906

Howard G. Pollack (CAB #162897; pollack@fr.com)
Michael R. Headley (CAB #220834; headley@fr.com)
S. Kameron Parvin (CAB #232349; parvin@fr.com)
FISH & RICHARDSON P.C.
500 Arguello Street, Suite 500
Redwood City, California 94063
Telephone: (650) 839-5070
Facsimile: (650) 839-5071

Attorneys for Plaintiff
POWER INTEGRATIONS, INC.

UNITED STATES DISTRICT COURT

NORTHERN DISTRICT OF CALIFORNIA

(SAN FRANCISCO DIVISION)

POWER INTEGRATIONS, INC., a Delaware corporation, Plaintiff, v. BCD SEMICONDUCTOR MANUFACTURING CORPORATION, a California corporation, SHANGHAI SIM-BCD SEMICONDUCTOR MANUFACTURING, CO., LTD, a China corporation, Defendants.	Case No. 07-cv-3137 WHA ***EX PARTE* APPLICATION FOR CONTINUANCE OF INITIAL CASE MANAGEMENT CONFERENCE**

Because Plaintiff Power Integrations, Inc.'s ("Power Integrations") counsel will be out of state for trial on another matter for Power Integrations on the currently scheduled date for the case management conference, Power Integrations hereby submits this application requesting a continuance until November 7, 2007 per the parties' prior stipulation, but in no event before October 11th. No continuances have been previously granted in this matter.

On August 6, 2007, the Clerk of the Court issued a notice scheduling an initial case management conference in this matter for September 20, 2007 at 11:00 a.m. [Docket # 6] The notice explained that "parties requesting a continuance shall submit a stipulation and proposed order." Because Power Integrations' counsel will be in Wilmington, Delaware in trial on another matter for Power Integrations on September 20th, Power Integrations contacted counsel for Defendants and met and conferred regarding the schedule. Because of scheduling conflicts of Defendants' counsel as well, the parties agreed to request a continuance of the case management conference until November 7, 2007 and submitted a joint stipulation in accordance with the Clerk's August 6, 2007 notice on August 22, 2007. [Docket # 8]

Rather than grant the stipulated request for a continuance, the Court instead moved the date for the conference forward, issuing an order setting the initial case management conference for September 13, 2007. [Docket # 9] Unfortunately, as explained in more detail below, this adjustment of the schedule does not cure the parties' scheduling conflict, because Plaintiff's counsel will already be in Delaware on September 13th for the aforementioned trial. Accordingly, Plaintiff files the present request again asking the Court for a continuance of the case management conference. Counsel for Defendants' have indicated that they do not oppose this request, but they have chosen not to join in a further stipulation beyond the one the parties previously submitted seeking the same continuance.

Counsel for Plaintiff, Fish & Richardson P.C., and specifically lead counsel Frank Scherkenbach and Howard Pollack, are also lead counsel for Power Integrations in the case captioned *Power Integrations v. Fairchild Semiconductor International et al.*, C.A. No. 04-1371-JJF (D. Del.). This matter has been pending since 2004 and is presently set for a jury trial to begin September 17, 2007 in Wilmington, Delaware, with a pre-trial conference to be held on September 12, 2007. Plaintiff's counsel will be traveling to Delaware on September 11 to attend the pre-trial conference and make final preparations for trial. The presentation of evidence is expected to continue through the end of the court day on September 20, 2007.

Thereafter, on September 27, 2007, plaintiff's counsel, Mr. Scherkenbach and Mr. Pollack, are scheduled to appear on behalf of Cadence Design Systems, Inc. at a hearing on a motion for

summary judgment and a pre-trial conference before Judge Patel in the matter of *Cadence Design Systems, Inc. et al. v. Nharpat Bhandari et al.*, Case No. C07 00823 MHP (N.D. Cal.). A bench trial in the Cadence matter is presently scheduled for October 9 and 10, 2007.

Based on information received from Defendants' counsel, it is Power Integrations' understanding that lead counsel for Defendants will be in the Eastern District of Texas for a claim construction hearing the week of October 15th and will be out of the country in Japan for the weeks of October 22nd and October 29th. It was in view of these commitments which, unfortunately come directly on the heels of Plaintiff's commitments, that the parties agreed to jointly request the November 7, 2007 date that was submitted by stipulation on August 22, 2007. [Docket # 8]

Because Plaintiff's counsel are not available to appear on the presently scheduled date for the case management conference due to an out of state trial on another matter, and in view of the prior commitments of all parties' counsel as explained above, Power Integrations requests that the Court reschedule the initial case management conference in accordance with the parties' stipulation filed on August 22, 2007. [Docket # 8] No continuances have been previously granted in this matter and, and given that there is no case schedule yet in place, granting this request will not impact any other scheduled event, nor will it significantly impact the timing of the ultimate resolution of this matter.

Dated: August 23, 2007

Respectfully submitted by,

FISH & RICHARDSON P.C.

By: /s/ Howard G. Pollack
Howard G. Pollack

Attorneys for Plaintiff
POWER INTEGRATIONS, INC.

50434123.doc

UNITED STATES DISTRICT COURT

NORTHERN DISTRICT OF CALIFORNIA

(SAN FRANCISCO DIVISION)

POWER INTEGRATIONS, INC., a Delaware corporation,

Plaintiff,

v.

BCD SEMICONDUCTOR MANUFACTURING CORPORATION, a California corporation, SHANGHAI SIM-BCD SEMICONDUCTOR MANUFACTURING, CO., LTD, a China corporation,

Defendants.

Case No. 07-cv-3137 WHA

[PROPOSED] ORDER GRANTING PLAINTIFF POWER INTEGRATIONS, INC.'S *EX PARTE* APPLICATION FOR CONTINUANCE OF INITIAL CASE MANAGEMENT CONFERENCE

Plaintiff Power Integrations, Inc.'s *Ex Parte* Application for Continuance of Initial Case Management Conference is GRANTED. The Case Management Conference and associated dates are rescheduled as follows:

Date	Event	Governing Rule
10/18/2007	Last day to: • meet and confer re: initial disclosures, early settlement, ADR process selection, and discovery plan • file the Joint ADR Certification with Stipulation to ADR Process or Notice of Need for ADR Phone Conference	FRCivP 26(f) & ADR L.R. 3-5 Civil L.R. 16-8

Date	Event	Governing Rule
11/1/2007	Last day to file Rule 26(f) Report, complete initial disclosures or state objection in Rule 26(f) Report, and file Case Management Statement	FRCivP 26(a)(1) & Civil L.R. 16-9
11/8/2007	INITIAL CASE MANAGEMENT CONFERENCE (CMC) in Courtroom 9, San Francisco at 11:00 am.	Civil L.R. 16-10

IT IS SO ORDERED.

Dated: _____

_____
HONORABLE WILLIAM ALSUP
JUDGE OF THE U.S. DISTRICT COURT

50434128.doc

EXHIBIT R
(Joint Stipulated Rule 26(F) Case Management Statement And [Proposed] Order, *Power Integrations, Inc. v. BCD Semiconductor, Inc.*, U.S. District Court - Northern California District - Case No. 07-3137)

Frank E. Scherkenbach
(CAB #142549; scherkenbach@fr.com)
FISH & RICHARDSON P.C.
225 Franklin Street
Boston, Massachusetts 02110-2804
Telephone: (617) 542-5070
Facsimile: (617) 542-8906

Howard G. Pollack
(CAB #162897; pollack@fr.com)
Michael R. Headley
(CAB #220834; headley@fr.com)
S. Kameron Parvin
(CAB #232349; parvin@fr.com)
FISH & RICHARDSON P.C.
500 Arguello Street, Suite 500
Redwood City, California 94063
Telephone: (650) 839-5070
Facsimile: (650) 839-5071

Attorneys for Plaintiff
POWER INTEGRATIONS, INC.

E. Robert Yoches
(bob.yoches@finnegan.com)
FINNEGAN, HENDERSON, FARABOW, GARRETT & DUNNER, L.L.P.
901 New York Avenue, NW
Washington, D.C. 20001-4413
Telephone: (202) 408-4000
Facsimile: (202) 408-4400

Erik R. Puknys
(CAB #190926; erik.puknys@finnegan.com)
FINNEGAN, HENDERSON, FARABOW, GARRETT & DUNNER, L.L.P.
3300 Hillview Ave
Palo Alto, CA 94304
Telephone: (650) 849-6600
Facsimile: (650) 849-6666

Attorneys for Defendants
BCD SEMICONDUCTOR MANUFACTURING CORPORATION, and SHANGHAI SIM-BCD SEMICONDUCTOR MANUFACTURING, CO., LTD

UNITED STATES DISTRICT COURT

NORTHERN DISTRICT OF CALIFORNIA

(SAN FRANCISCO DIVISION)

POWER INTEGRATIONS, INC., a Delaware corporation,

Plaintiff,

v.

BCD SEMICONDUCTOR MANUFACTURING CORPORATION, a California corporation, SHANGHAI SIM-BCD SEMICONDUCTOR MANUFACTURING, CO., LTD, a China corporation,

Defendants.

No. C 07-03137 WHA

JOINT STIPULATED RULE 26(f)/CASE MANAGEMENT STATEMENT AND [PROPOSED] ORDER

Date: October 18, 2007
Time: 11:00 a.m.
Place: Courtroom 9, 19th Floor
Judge: Honorable William Alsup

Pursuant to the Court's August 28, 2007, Order and the Clerk's Notice of September 7, 2007, the parties in the above-entitled action, Plaintiff Power Integrations, Inc. ("Power Integrations") and Defendants BCD Semiconductor Manufacturing Corporation ("BCD California")

and Shanghai SIM-BCD Semiconductor Manufacturing, Co., Ltd. ("BCD Shanghai") (collectively referred to herein as "BCD"), jointly submit this Joint Case Management Statement and Proposed Order addressing the topics identified in recently amended Local Rule 16-9 and Federal Rule of Civil Procedure 26(f).

DESCRIPTION OF THE CASE

1. JURISDICTION AND SERVICE

This action arises under the patent laws of the United States, Title 35 U.S.C. § 1 *et seq.* The parties agree that Power Integrations' complaint sets forth various claims for infringement of United States patents, over which this Court has subject matter jurisdiction under 28 U.S.C. § 1338(a). Service is complete. No issues exist regarding personal jurisdiction or venue with regard to BCD California. Counsel for BCD is currently investigating potential jurisdictional and venue issues with regard to BCD Shanghai.

2. FACTS

Power Integrations filed this suit on June 14, 2007, accusing Defendants of directly and indirectly infringing Power Integrations' U.S. Patent Nos. 6,107,851 (the "'851 patent"), 6,249,876 (the "'876 patent"), and 5,313,381 (the "'381 patent") (collectively, "the Patents-in-suit") by the manufacture, use, sale, offering for sale, and/or importation of devices, including PWM controller integrated circuit devices, covered by one or more claims of the Patents-in-suit, all to the injury of Power Integrations. There are no related *inter parties* administrative proceedings involving Power Integrations and BCD.

3. LEGAL ISSUES

Power Integrations alleges that BCD infringes the three Patents-in-suit. The following issues are presented by Power Integrations' complaint: (a) whether BCD infringes the Patents-in-suit under 35 U.S.C § 271; (b) whether the Patents-in-suit are valid and enforceable; (c) if the Patents-in-suit are infringed, valid, and enforceable, what is the appropriate amount of damages suffered by Power Integrations; and (d) whether other remedies, including permanent injunctive relief, are appropriate.

///

4. PROCEDURAL HISTORY AND MOTIONS

Power Integrations filed its complaint on June 14, 2007 and served BCD California on September 10, 2007. BCD Shanghai accepted service on September 24, 2007, and Power Integrations has stipulated to extend the date for which both Defendants can answer the complaint through December 24, 2007, the date on which the 90-day period provided under Rule 4 expires. Defendants have not yet answered. There are no pending motions.

After Power Integrations declined to proceed before a Magistrate Judge on July 23, 2007, the case was reassigned to this Court, at which time the Court rescheduled the initial case management conference from September 17 to September 20, 2007. [Docket # 6] By joint stipulation, the parties requested that the initial case management conference be continued to November 8, 2007. [Docket #8] But the Court instead moved the case management conference forward to September 13, 2007. [Docket #9] Power Integrations then filed an *ex parte* motion again requesting that the initial case management conference be continued to November 8, 2007 [Docket #10], and on August 28, 2007 the Court rescheduled the initial case management conference to October 4, 2007. [Docket #12] On September 7, 2007, the initial case management conference was rescheduled for October 18, 2007, per a Clerk's Notice filed that same day. [Docket #13]

At this point, it is too early to determine whether the parties will file any further motions. Nevertheless, BCD expects that it will file motions for summary judgment on the issues of infringement, validity, and willfulness. Further, BCD is considering whether to request a stay or partial stay of this litigation pending the outcome of reexamination proceedings that are currently being conducted by the United States Patent and Trademark Office ("PTO"). *See infra* § 10.

5. AMENDMENT OF PLEADINGS

To date, no discovery has taken place. The extent to which claims or defenses are expected to be added or dismissed will depend on the facts discovered in this case.

6. EVIDENCE PRESERVATION

The parties have been advised not to destroy evidence relevant to the issues reasonably evident in this action, including putting a litigation hold on document destruction programs and

electronic evidence.

7. DISCLOSURES

The parties expect to exchange initial disclosures in full and timely compliance with the requirements of Fed. R. Civ. P. 26 on October 11, 2007. The parties' initial disclosures will include a list of individuals likely to have discoverable information that the parties may use to support their claims or defenses. In accordance with Fed. R. Civ. P. 26(A)(1)(B), the parties' initial disclosures will also identify categories of documents that they may use to support their claims or defenses. Because there has been no discovery to date, any calculation of damages to be included in Power Integrations' initial disclosures would be premature and will therefore not be included.

8. DISCOVERY

8.1 Scope of Discovery Taken to Date

To date, there has been no discovery.

8.2 Scope of Anticipated Discovery

The parties' proposed schedule is set forth below in Section 8.4.

Plaintiff's Proposal: Power Integrations intends to seek discovery on at least the following general subjects:

- Technical information related to Defendants' PWM integrated circuits, including the design, operation, testing, simulation, and manufacture thereof;
- Activities of Defendants related to the manufacture, use, sale, offer for sale, marketing, and importation of Defendants' PWM integrated circuits in or into the United States, including California.
- The identity of individuals involved in, and their involvement in, the design, operation, testing, simulation, manufacture, use, sale, offer for sale, marketing, and/or importation of Defendants' PWM integrated circuits.
- The relationship between each of BCD Semiconductor Manufacturing Corporation, Shanghai SIM-BCD Semiconductor Manufacturing Co., Ltd., and third-party distributors of Defendants' PWM integrated circuits.

Defendants' Proposal: BCD California and, to the extent there is jurisdiction over BCD Shanghai and venue is proper, BCD Shanghai intend to seek discovery on at least the following general subjects:

- Power Integrations' infringement allegations;
- The validity and enforceability of the Patents-in-suit;
- The prosecution of the Patents-in-suit;
- The development and commercialization of the technologies, devices, and methods described and claimed in the Patents-in-suit;
- The development and commercialization of third-party technology and devices relevant to the Patents-in-suit, including prior art relevant to the Patents-in-suit and non-infringing alternatives to the devices and methods claimed in the Patents-in-suit;
- Power Integrations' allegations of damages and other harm it claims to have suffered.

8.3 Proposed Limitations or Modifications of the Discovery Rules

The parties agree that, to the extent there is jurisdiction over BCD Shanghai and venue is proper, BCD California and BCD Shanghai should be treated as a single party for purposes of determining the following discovery limits.

The parties agree that the relevant limitations on discovery as set forth in the Federal Rules of Civil Procedure are appropriate for use in this case and need not be modified. Power Integrations proposes that the number of interrogatories should be limited to the presumptive limit of twenty-five (25) interrogatories as set forth in Rule 33(a) of the Federal Rules of Civil Procedure. The parties further agree that the presumptive limit of seven (7) hours per deposition set forth in Rule 30(d)(2) should be instituted for fact witnesses in this case and that the limit of ten (10) depositions set forth in Rule 30(a)(2)(A) of the Federal Rules of Civil Procedure be applied as well.

Power Integrations proposes that depositions of each expert shall be limited to a total of fourteen (14) hours, and that depositions taken pursuant to Rule 30(b)(6) be limited to seven (7) hours for each designated witness, not including the time spent deposing any such witness in his or her personal capacity. BCD submits that the presumptive limit of seven (7) hours should apply to expert witnesses (which, of course, can be extended to a longer period of time if that should prove necessary) and that this Court's standing order concerning 30(b)(6) depositions is appropriate for this case.

///

8.4 Proposed Discovery Plan Pursuant to Fed. R. Civ. P. 26(f)

The parties propose the following dates for this case.

EVENT (Patent Local Rule)	DATE
Preliminary Infringement Contentions (3-1, 3-2)	Nov. 15, 2007
BCD to Answer or Otherwise Respond to Complaint	December 24, 2007
Preliminary Invalidity Contentions (3-3)	January 4, 2008
Exchange Claim Terms (4-1)	January 14, 2008
Exchange Preliminary Claim Constructions (4-2)	February 5, 2008
File Joint Claim Construction Statement (4-3)	February 29, 2008
Close of Claim Construction Discovery (4-4)	March 24, 2008
File Patentee's Claim Construction Brief (4-5a)	March 31, 2008
File Opposing Claim Construction Brief (4-5b)	April 14, 2008
File Reply Claim Construction Brief (4-5c)	April 23, 2008
Claim Construction Hearing (4-6)	May 8, 2008
Deadline to Amend Pleadings	July 25, 2008
Fact Discovery Cut-Off	July 25, 2008
Expert Reports	October 3, 2008
Rebuttal Expert Reports	October 31, 2008
Expert Discovery Cut-Off	November 28, 2008
Deadline for Filing Dispositive Motions	January 9, 2009
Deadline to meet and confer re trial issues, including joint final pretrial conference statement and proposed order and coordinated submission of trial exhibits and other material; lodging of exhibits and other trial materials; serving and filing requested voir dire questions, jury instructions, and forms of verdict; serving and filing statements designating excerpts from depositions, interrogatory answers, and responses to requests for admission to be offered at the trial other than for impeachment or rebuttal; advising and conferring with opposing party re any objections to receipt into evidence of any proposed testimony or exhibit	To be determined based on the Court's trial schedule
Joint Pretrial Conference Statement Due / Deadline to File Motions in Limine	Court to determine
Pretrial Conference	Court to determine
Trial	Court to determine

///

///

///

8.5 Other Stipulations

The parties have reached the following agreements:

8.5(a) Protective Order

The parties are currently working together on the form of a stipulated Protective Order and expect to be able to submit a proposed Order for the Court's approval in advance of the case management conference. The parties agree that the protective order should include a "claw back" provision to prevent the inadvertent disclosure of documents or other information subject to a claim of privilege, work-product protection, or confidentiality from being deemed a waiver or impairment of any claim of privilege or other protection

8.5(b) E-discovery and Electronic Document Retention

The parties recognize that the burden of suspending normal policies regarding electronic backup systems for disaster recovery outweighs the potential relevance of documents that might only be captured by some interim backup on an unknown date. Therefore, the parties agree that they can continue to utilize their standard disaster recovery systems, and specifically agree that each party may continue to recycle backup tapes per their standard disaster recovery systems protocol; provided however, that each party shall retain throughout the litigation one set of backup tapes from its disaster recovery systems from a standard backup performed during the month of October 2007.

8.5(c) Electronic File Searching

The parties agree that each party may use reasonable keyword searching to identify electronic documents reasonably likely to have discoverable information regarding the subject matter of this lawsuit.

8.5(d) Form of Production of Electronic Documents

The parties anticipate producing most documents in an electronic format such as PDF or TIFF files – specifically a form that preserves the page breaks between documents and otherwise allows to documents to be identified. The parties further agree that the electronically produced files do not need to be OCR'd prior to production. The parties also anticipate producing certain documents in their native format and will meet and confer regarding such production as necessary and appropriate.

9. CLASS ACTION

This is not a class action case.

10. RELATED CASES

Power Integrations has sued Fairchild Semiconductor Corporation and Fairchild Semiconductor International (collectively, "Fairchild") in the United States District Court for the District of Delaware, CA No. 04-1371-JJF, for infringement of two of the patents-in-suit, the '876 Patent and the '851 Patent. On October 10, 2006, a Jury found that Fairchild willfully infringed both the '876 and the '851 patent, and another Jury affirmed the validity of the '876 and '851 patents on September 21, 2007. Given the stage of the proceedings in Delaware, Power Integrations does not believe that there will be an undue duplication of effort or expense, or conflicting results, if the two cases are conducted before different judges.

The third patent-in-suit, the '381 patent, was previously asserted by Power Integrations and found valid and infringed by a jury in the matter of *Power Integrations, Inc. v. Motorola, Inc.*, Case No. CA98-490 JJF (D. Del., Oct. 16, 1999).

Further, two of the three patents involved in this action (the '876 and the '851 patents) are also involved in reexamination proceedings (Reexamination Nos. 90/008326 and 90/008324). In December 2006, the PTO determined that there existed a "substantial new question of patentability" for both the '876 and '851 patents. Both reexamination files were then forwarded to an Examiner for further review. No Office Action has yet been issued in either reexamination.

11. RELIEF

Plaintiff's Statement: Power Integrations will seek damages and injunctive relief for Defendants' alleged infringement. Damage calculations will depend on the information in the possession of Defendants, which has not yet been provided to Power Integrations. Damages will be based on lost profits or, at a minimum, a reasonable royalty. Lost profits will be based on the profits Power Integrations lost as a result of Defendants' infringing sales and by price erosion due to the presence of an infringing competitor in the market. It would be premature to estimate the amount of damages at this time.

///

Defendants' Statement: BCD believes that Power Integrations is not entitled to any damages or any other relief it has asked for in its complaint. Accordingly, BCD will ask this Court to enter judgment in BCD's favor and award BCD the attorneys fees and costs BCD incurred in defending itself in this action.

12. SETTLEMENT AND ADR

The parties filed a Stipulation and Proposed Order Selecting an ADR process on August 27, 2007. The parties selected a Private ADR process, specifically, private mediation by a mediation provider to be mutually selected by the parties. To maximize the likelihood for success of the ADR process, the parties further requested that the Court set the deadline to hold the ADR session to sixty (60) days after the issuance of the Court's Claim Construction Order.

13. CLAIM CONSTRUCTION

As this is a patent case, a claim construction hearing will be necessary. The parties do not believe any live testimony will be necessary for the claim construction hearing. Power Integrations does not believe there is any need for expert or other special discovery related to claim construction. BCD believes that some expert discovery may be required in the event that one or more of the parties intends to rely on an expert's opinion, for example, an expert's opinion concerning the ordinary meaning of a claim term to a person of skill in the technology of the Patents-in-suit. Because Power Integrations is both Plaintiff and patentee, Power Integrations should be the first party to present at the hearing on claim construction

14. CONSENT TO MAGISTRATE JUDGE FOR ALL PURPOSES

The parties do not consent to proceed before a Magistrate Judge.

15. OTHER REFERENCES

This being a patent case, the parties do not believe that this case is suitable for reference to binding arbitration, a special master, or the Judicial Panel on Multidistrict Litigation.

16. NARROWING OF ISSUES AND EXPEDITED SCHEDULE

To date, the parties have not identified any issues that can be narrowed by agreement or by motion, nor do the parties currently have any suggestions to expedite the presentation of evidence at trial.

17. TRIAL

Power Integrations has requested that this case be tried to a jury. Because of the number of patents in the case and the complexity of the issues in the case, the parties expect that the trial may last up to two (2) weeks.

18. DISCLOSURE OF NON-PARTY INTERESTED ENTITIES OR PERSONS

The parties state that other than Power Integrations, Inc. and the named Defendants, it is not aware of any person, associations, firms, partnerships, corporations, or other entities known to have either (1) financial interest in the subject matter at issue or in a party to the proceeding; or (2) any other kind of interest that could be substantially affected by the outcome of the proceeding.

19. CURRENT SERVICE LIST

Power Integrations' counsel may be served at:

Howard G. Pollack (CAB #162897; pollack@fr.com)
Michael R. Headley (CAB #220834; headley@fr.com)
S. Kameron Parvin (CAB #232349; parvin@fr.com)
FISH & RICHARDSON P.C.
500 Arguello Street, Suite 500
Redwood City, California 94063
Telephone: (650) 839-5070
Facsimile: (650) 839-5071

Frank E. Scherkenbach (CAB #142549; scherkenbach@fr.com)
FISH & RICHARDSON P.C.
225 Franklin Street
Boston, Massachusetts 02110-2804
Telephone: (617) 542-5070
Facsimile: (617) 542-8906

Defendants' counsel may be served at:

E. Robert Yoches (bob.yoches@finnegan.com)
FINNEGAN, HENDERSON, FARABOW,
GARRETT & DUNNER, L.L.P.
901 New York Avenue, NW
Washington, D.C. 20001-4413
Telephone: (202) 408-4000
Facsimile: (202) 408-4400

Erik R. Puknys (CAB #190926; erik.puknys@finnegan.com)
FINNEGAN, HENDERSON, FARABOW,
GARRETT & DUNNER, L.L.P.
3300 Hillview Ave
Palo Alto, CA 94304
Telephone: (650) 849-6600
Facsimile: (650) 849-6666

Dated October 11, 2007

By: /s/ Howard G. Pollack
Howard G. Pollack
FISH & RICHARDSON P.C.

Attorneys for Plaintiff
POWER INTEGRATIONS, INC.

By: /s/ Erik R. Puknys
Erik R. Puknys
FINNEGAN, HENDERSON, FARABOW, GARRETT & DUNNER, L.L.P.

Attorneys for Defendants
BCD SEMICONDUCTOR MANUFACTURING CORPORATION and SHANGHAI SIM-BCD SEMICONDUCTOR MANUFACTURING, CO., LTD.

Pursuant to General Order No. 45, Section X(B) regarding signatures, I attest under penalty of perjury that concurrence in the filing of this document has been obtained from Erik R. Puknys.

Dated: October 11, 2007

/s/ Howard G. Pollack
Howard G. Pollack
FISH & RICHARDSON P.C.

Attorney for Plaintiff
POWER INTEGRATIONS, INC.

ORDER

IT IS SO ORDERED.

Dated: _____

HONORABLE WILLIAM ALSUP
UNITED STATES DISTRICT JUDGE

50435783.doc

EXHIBIT S
(*Ex Parte* Reexamination Filing Data - December 31, 2007, USPTO)

UNITED STATES PATENT AND TRADEMARK OFFICE

Commissioner for Patents
United States Patent and Trademark Office
P.O. Box 1450
Alexandria, VA 22313-1450
www.uspto.gov

Ex Parte Reexamination Filing Data - December 31, 2007

1. Total requests filed since start of ex parte reexam on 07/01/81 ..... 9060[1]

a. By patent owner	3495	39%
b. By other member of public	5400	59%
c. By order of Commissioner	165	2%

2. Number of filings by discipline

a. Chemical Operation	2703	30%
b. Electrical Operation	3023	33%
c. Mechanical Operation	3334	37%

3. Annual Ex Parte Reexam Filings

Fiscal Yr.	No.	Fiscal Yr.	No.	Fiscal Yr.	No.	Fiscal Yr.	No.
1981	78 (3 mos.)	1989	243	1997	376	2005	524
1982	187	1990	297	1998	350	2006	511
1983	186	1991	307	1999	385	2007	643
1984	189	1992	392	2000	318	2008	165
1985	230	1993	359	2001	296		
1986	232	1994	379	2002	272		
1987	240	1995	392	2003	392		
1988	268	1996	418	2004	441		

4. Number known to be in litigation 2398 26%

5. Determinations on requests 8714

a. No. granted ..... 7998 ..... 92%

(1) By examiner 7885
(2) By Director (on petition) 113

b. No. denied ..... 716 ..... 8%

(1) By examiner 681
(2) Order vacated 35

[1]Of the requests received in FY 2008, 23 requests have not yet been accorded a filing date, and preprocessing of 3 requests was terminated for failure to comply with the requirements of 37 CFR 1.510. See Clarification of Filing Date Requirements for *Ex Parte* and *Inter Partes* Reexamination Proceedings, Final Rule, 71 Fed. Reg. 44219 (August 4, 2006).

6. Total examiner denials (includes denials reversed by Director) 794

a. Patent owner requester	439	55%
b. Third party requester	355	45%

7. Overall reexamination pendency (Filing date to certificate issue date)

a. Average pendency	24.0 (mos.)
b. Median pendency	18.6 (mos.)

8. Reexam certificate claim analysis:

	Owner Requester	3rd Party Requester	Comm'r Initiated	Overall
a. All claims confirmed	23%	29%	12%	26%
b. All claims cancelled	7%	12%	21%	10%
c. Claims changes	70%	59%	67%	64%

9. Total ex parte reexamination certificates issued (1981 - present) 6066

a. Certificates with all claims confirmed	1556	26%
b. Certificates with all claims canceled	636	10%
c. Certificates with claims changes	3874	64%

10. Reexam claim analysis - requester is patent owner or 3rd party; or Comm'r initiated.

a. Certificates - PATENT OWNER REQUESTER 2607

(1) All claims confirmed	592	23%
(2) All claims canceled	194	7%
(3) Claim changes	1821	70%

b. Certificates - 3rd PARTY REQUESTER 3313

(1) All claims confirmed	946	29%
(2) All claims canceled	413	12%
(3) Claim changes	1954	59%

c. Certificates - COMM'R INITIATED REEXAM 146

(1) All claims confirmed	18	12%
(2) All claims canceled	30	21%
(3) Claim changes	98	67%

EXHIBIT T
(Hearing Transcript, February 7, 2008, U.S. District Court - Delaware - Case No. 07-633-JJF)

00001

IN THE UNITED STATES DISTRICT COURT

IN AND FOR THE DISTRICT OF DELAWARE

- - -

POWER INTEGRATIONS, INC., : CIVIL ACTION
:
Plaintiff, :
:
vs. :
:
BCD SEMICONDUCTOR :
CORPORATION, and SHANGHAI :
SIM-BCD SEMICONDUCTOR :
MANUFACTURING CO., LTD., :
:
Defendants. : NO. 07-633 (JJF)

- - -

Wilmington, Delaware
Thursday, February 7, 2008
2:05 o'clock, p.m.

- - -

BEFORE: HONORABLE LEONARD P. STARK, U.S. MAGISTRATE

- - -

APPEARANCES:

FISH & RICHARDSON P.C.
BY: WILLIAM J. MARSDEN, JR., ESQ.

-and-

Valerie J. Gunning
Official Court Reporter

00002

APPEARANCES (Continued):

FISH & RICHARDSON P.C.
BY: FRANK E. SCHERKENBACH, ESQ. and
(Boston, Massachusetts)

-and-

FISH & RICHARDSON P.C.
BY: HOWARD G. POLLACK, ESQ. and.
MICHAEL R. HEADLEY, ESQ.
(Redwood City, California)

Counsel for Plaintiff

ASHBY & GEDDES.
BY: STEVEN BALICK, ESQ.

-and-

FINNEGAN, HENDERSON, FARABOW, GARRETT & DUNNER, L.L.P.
BY: ROBERT L. BURNS, ESQ.
(Reston, Virginia)

-and-

00003
APPEARANCES (Continued):

FINNEGAN, HENDERSON, FARABOW, GARRETT & DUNNER, L.L.P.
BY: ERIK R. PUKNYS, ESQ.
(Palo Alto, California)

Counsel for Defendants

- - -

00004

PROCEEDINGS

(Proceedings commenced in the courtroom, beginning at 2:05 p.m.)

THE COURT: I think you'll you'll all understand that I don't know too much about your case or even who any of you are. I'm sure you can tell me. But from what I understand from Judge Farnan, at least portions of this case are going to be referred to me, and so what I want to know is, first of all, whatever it is you want me to know, but, second, in particular, what is most pressing and what is it you're looking for from me today or in the near future.

And since you're at plaintiff's table --

MR. SCHERKENBACH: Thank you. I'm Frank Scherkenbach, of Fish & Richardson, representing the plaintiff, Power Integrations, and my colleagues here are Howard Pollack, William Marsden, Michael head /HRAOE, all of the Fish & Richardson firm.

THE COURT: All right.

MR. SCHERKENBACH: If I could start with, just maybe give you a few minutes of sort of what the case is about.

THE COURT: Okay.

MR. SCHERKENBACH: And so who we are -- I'm sure

00005
you've heard of us before.

THE COURT: I appreciate that.

Why don't we have defense counsel introduce themselves first.

MR. BALICK: Your Honor, good afternoon. Steven Balick, from Ashby & Geddes. With me is Eric Puknys and Robert Burns, from the Finnegan Henderson firm.

THE COURT: Welcome to you all.

MR. PUKNYS: Good afternoon, your Honor.

MR. BURNS: Good afternoon, your Honor.

MR. SCHERKENBACH: Thank you, your Honor.

So as you probably know, it's a patent case.

THE COURT: That much I knew.

MR. SCHERKENBACH: And we're the plaintiff. Yes. And it's a semiconductor case. So my client is a little Silicon Valley, by comparison anyway, a little Silicon Valley company that makes specialized I.C.'s, or chips that are used in switching power supplies, and the application that is central to this case and central to many of them are cell phone chargers.

So the new version, the light compact chargers that you plug in a wall to charge up your cell phone, those things used to be these big iron bricks. Now they're not. That's because there's a specialized semiconductor inside. That's our business.

00006

And so this case involves three patents that relate to various aspects of the functionality of those chips. And the three patents have all been litigated before, and it's relevant to the preliminary injunction requests that we've made. I think that the Court understands just a little bit about that.

So one of the patents -- we have a bad habit of referring to them by the last three numbers.

THE COURT: I've already picked that much up. Thank you.

MR. SCHERKENBACH: Okay. There's one called the '381 patent. It has to do with basically putting all the basic functionality that you need for a switching power supply chip, and that's what these things are, is they're, believe it or not, in that little cell phone charger is a power supply. And the chip, one of the things the chip does is switch off and on very, very rapidly in order to convert the AC power at the wall to the DC power that your cell phone needs.

And it's important to be able to do that in as small package as possible and as energy efficient package as possible. The '381 patent is about being able to do that in a small package, and in particular, having only three pins or electrical connections. Okay. Three-pin. That's often referred to as the, sort of the three-pin patent. We call

00007

it sometimes the top switch patent after the name of the original product that used that patent, Top Switch.

That patent was litigated against Motorola in this court, not your court, but this Court, in the late 90's, '97 to '99, in front of Judge Farnan.

There was a trial in that case, Power Integrations against Motorola and it was not just that patent. There were other patents, but as relevant here, that patent was found to be valid, infringed, and so forth. Power Integrations won that case and was awarded a bunch of money.

Fast forward a bit. So that's one of the patents asserted against BCD.

Fast forward now to sort of mid-2000 time frame, and another company that got into this business is Fairchild Semiconductor, which is a very big semiconductor company. And in a case that we filed in '04 against Fairchild, we asserted a different set of Power Integrations patents, two of which aren't in this case. So that's where the other two patents of the three come from. Those are the '851 patent and the '876 patent.

Those both relate generically to the idea of jittering the output of a power supply, meaning varying the frequency output of the power supply in a known and predictable way. It turns out there are a lot of good

00008

reasons to do that, not least is if you do it, you minimize electromagnetic interference.

If you've got this switching power supply that's always switching off and on at a dead steady rate, that has signature to it, so to speak, and creates EMI. EMI is a bad thing in power supplies. It can interfere with your cell, interfere with other things. Those two patents generally relate to solving that problem and they each relate to a different kind of circuit for jittering the frequency output.

Again, that case was in front of Judge Farnan. Those were not the only two patents, and so in that case, again, the patents were construed in a Markman proceeding.

We went to trial. We actually had multiple trials in that case. I don't know if Judge Farnan gave you this background, but he had bifurcated the case so that we had an initial trial on infringement and damages actually and willfulness, and then we had a separate trial on validity.

THE COURT: Separate trial on what?

MR. SCHERKENBACH: On validity.

THE COURT: On validity.

MR. SCHERKENBACH: And that trial happened in September '07. It seems like a lot longer ago than that.

00009

THE COURT: Right.

MR. SCHERKENBACH: It just happened last fall.

THE COURT: All right.

MR. SCHERKENBACH: Again, we prevailed on those patents, so they were found to be valid, I infringed and so forth, and, again, a fairly large damages award.

So, and actually as a result of that, now I'm getting to BCD comes into the picture. A very big customer for these sorts of chips are the cell phone manufacturers. Samsung is the -- if they aren't the biggest in the world, they're number two. They certainly go back and forth with Nokia. Historically have been a very, very large customer of Power Integrations.

In the -- in the days before we sued Fairchild, Fairchild had taken a bunch of the Samsung business. After the verdict, Samsung basically threw Fairchild out and other companies stood ready to take that business. One of them is BCD. And actually BCD became, we believe, their largest supplier of chips to take the place where Fairchild was. That's why this case got filed.

Now, the next thing I would like to talk about is why it got filed where it did and how it ended up here.

So BCD is an offshore company, of course, but they have a sales office in Silicon Valley. And before --

00010

and we knew they were supplying, we knew from our own intelligence, our competitive intelligence that they were supplying Samsung in Korea.

We weren't sure at the time, at the time that we -- after we sued them whether the chips had actually come onshore to the U.S.

They were being offered here through their sales agent and you could get their -- the data sheets from the website and so forth. So it was no problem bringing a lawsuit based on an offer for sale, infringement. We did that in California and there was no question of jurisdiction there as well, because they had a wholly-owned subsidiary that's in the Northern District of California.

However, we, of course, all along, wanted, if we could, to take advantage of Judge Farnan's familiarity with these patents. I mean, he had been living with them for years. Been through two trials and so forth. And so essentially, when we were able to verify that, in fact, the chips were coming onshore in cell phone chargers and, in fact, there were lots of them in Delaware, which we subsequently did, we then dismissed the California case as a matter of right before BCD had answered, filed a case here.

So that's how the case got here.

THE COURT: All right.

00011

MR. SCHERKENBACH: And that just about catches us up.

We had -- there are some things that went on in the California case in terms of negotiating schedules and so forth that may prove relevant, but I won't go into those right now.

But, in any event, so we moved for preliminary injunction, as I think Judge Farnan may have indicated. The party submitted a joint scheduling proposal. And there are -- the two things that are most pressing are, number one, the preliminary injunction filing and getting a schedule to deal with that.

Number two, they, of course, are challenging personal jurisdiction. That's a threshold issue which we which we want resolved as well.

And then in a way I guess the third issue is what the schedule in the case will be if it's going to be here.

And I know you have not had a chance to look at any of this, but essentially there are competing schedules that were submitted as part of the Rule 16 and the dates are more or less 10 or 11 months apart. We would like it sooner. They would like it later.

THE COURT: All right. That's for going out through things like Markman and case dispositive motions and

00012
trial?

MR. SCHERKENBACH: Correct.

THE COURT: Okay.

MR. SCHERKENBACH: Correct.

THE COURT: Is there anything close to an agreement on the timing by which I should resolve the two motions that are pending?

MR. SCHERKENBACH: There isn't, and in particular -- actually, on the one motion, I am not really sure there's a disagreement.

Let me talk about their jurisdictional motion, first of all. So they filed it. We opposed yesterday. They get to file a reply, which will be, I think, early next week, and I don't think there's any disagreement that that one should be resolved.

THE COURT: You are just proceeding under the normal court rules of timing?

MR. SCHERKENBACH: Yes.

THE COURT: So the motion to dismiss should be fully briefed next week?

MR. SCHERKENBACH: I believe Monday or Tuesday.

MR. POLLACK: A week from Monday.

MR. SCHERKENBACH: A week from Monday. Excuse me.

THE COURT: All right.

00013

MR. SCHERKENBACH: So in terms of what the parties would like you to do on that, that's as pretty straightforward as you can get to it. The only potential dispute is whether there might be a need for jurisdiction, if you think that there are -- that we have not made the prima facie showing required to establish jurisdiction. We did ask in the alternative for jurisdictional discovery.

THE COURT: Right.

MR. SCHERKENBACH: Okay. On the preliminary injunction, in terms of the timing of that, your Honor, there is a dispute. We had asked for relatively expedited treatment that would get us -- that would get the briefing done this month and hopefully even get to a hearing late this month.

BCD has asked for both discovery and more time in. In response to their discovery requests, we actually gave them pretty much everything we could give them that was nonconfidential from the earlier cases that relates to these patents, so we did provide deposition transcripts of the inventors. We actually provided inventor notebooks. We provided trial transcript testimony of the inventors and of our expert from the Fairchild case.

We gave them the invalidity report or the responsive validity report, I should say, of our expert in

00014

the Fairchild case. So a pretty good batch of stuff that they have.

We also offered to let them depose our declarants. We have two declarants in support of the P.I. motion. One is a P.I. expert. One is what you might call an irreparable harm expert, basically the VP of sales who has talked about the impact on the marketplace.

THE COURT: You provided them all with discovery relating to the preliminary injunction or are you still ongoing?

MR. SCHERKENBACH: If there's something more specific they want, we would be happy to entertain it. We have certainly not drawn anything like a line in the sand.

We just sort of proactively gave them everything we thought that they might conceivably need or want in order to deal with the motion. You know, just -- on the infringement side, of course, they have -- they know everything they need to know since it's their -- they may have the schematics and so forth. Nevertheless, we did give them our own reverse engineered schematics. We were actually forced to reverse engineer their part. They felt it inappropriate to have our expert look at their, even under protective order, look at their information until this motion to dismiss was resolved, a separate issue.

00015

But, in any event, on validity, prior art is public. There really -- aren't really any issues there in terms of confidentiality.

They were well aware of the Fairchild proceedings. They actually had a representative who sat through the trial in the Fairchild case. So we feel like they've had quite a bit of time to sort of come to terms with this.

THE COURT: It looks like you filed your motion for preliminary injunction towards the end of January?

MR. SCHERKENBACH: Yes, that's correct, toward the end of January.

THE COURT: And so you'd like to have me ideally require them to respond and you would reply and I would have a hearing all before the end of this month?

MR. SCHERKENBACH: I think that's probably unrealistic now, honestly.

THE COURT: What's realistic?

MR. SCHERKENBACH: We're trying to be reasonable. I think if they want to take the depositions of our declarants, that's fine, we'll make them available. And I understand it's a significant thing for the preliminary injunction. We did limit it to one claim of one patent, okay. It's not by any means, you know, a preview of the

00016

whole case. It's very narrow. And I think they should be able to respond within a couple of weeks, say, after they depose our folks. And then we'll reply within a week or ten days thereafter and then whatever your schedule is.

We would certainly like to get it at least submitted, say, in March. I think that's realistic.

THE COURT: All right. Let me hear from the other side.

MR. SCHERKENBACH: Thank you.

THE COURT: I appreciate that background.

MR. SCHERKENBACH: Thank you.

MR. PUKNYS: Thank you, your Honor. I appreciate you seeing us on such short notice.

I'm Eric Puknys with Finnegan Henderson.

Mr. Scherkenbach is very articulate and knowledgeable, very articulate and knowledgeable about the patents in suit, the technology involved. I'm nowhere near to the level where he is. He has lived with this case, these patents, this technology, for ten years. We've been living it for a matter of months.

THE COURT: I've been living with it for a few minutes.

MR. PUKNYS: So I'm not going to get into that.

What I am going to get into are the two motions

00017

that are in front of you right now, still being briefed.

But on the motion to dismiss, we think this case belongs in California. They originally brought the case in California in June of last year. In October, they voluntarily dismissed it to bring this case here and then in January filed for a motion for preliminary injunction.

Just before they filed for their preliminary injunction motion, we file a D.J. complaint out in California to try and get us back there. So we're willing to litigate the dispute, just not in Delaware.

THE COURT: Has your case moved at all or it's too new?

MR. PUKNYS: It's too new, your Honor.

THE COURT: All right.

MR. PUKNYS: In fact, if this motion to dismiss is denied, we're going to voluntarily dismiss that case. We don't want to litigate in two forums.

But the reason we think it belongs in California, and Mr. Scherkenbach touched on this briefly, their complaint, we're selling parts to Samsung. A Chinese company is selling parts to a Korean company, delivering them to the Korean companies factory in China, and that Korean company is sending their parts all over the world, and apparently some have ended up in Delaware.

00018

And we're -- I have no reason to dispute their declarations on that, but the fact of the matter is the case law is very clear on that. We're not targeting Delaware. We're targeting Korea. We're interested in selling parts in Korea. We are not interested in selling parts in Delaware. And the case law that we've briefed is very clear on that.

What this is going to come down to is, are the facts of this case closer to our cases and are the facts in their case closer to their cases.

I just received their brief last night. I don't think you want us to argue the merits of the brief now.

THE COURT: No.

MR. PUKNYS: What we'd like to have happen is the preliminary injunction briefing to be stayed pending the motion to dismiss, and that's because the motion to dismiss is a threshold matter. You can't give a preliminary injunction motion if you don't have jurisdiction.

And I don't see how they can complain about any prejudice, seeing that they've known about us since at least June of 2007, and if they were going to move for a preliminary injunction, the time and place to do that was in July 2007, in California.

I have no idea why they've waited so long. I have not heard any explanation for why they've waited so long, and that alone is enough to deny the motion for

00019

preliminary injunction.

Now, on the merits, they're asking for what's essentially the death penalty in a civil case: No more selling products for our company based on what is a very incomplete record.

Now, Mr. Scherkenbach talked about the material that they voluntarily gave to us. It's about 5,000 pages or so we received in the last week. But a patent case is an enormous undertaking. They've taken years to become familiar with the technology. We're not asking for years. We're asking for 90 days. We're asking for 90 days so we can become familiar with the issues, so that our expert can become familiar with the issues, and we think that that is a more than reasonable proposition. And, again, that's assuming that you don't stay briefing completely.

THE COURT: What would your 90 days encompass? Would you agree to get into a hearing on the on the preliminary injunction at the end of the 90 days?

MR. PUKNYS: We'd like to file our opposition brief at the end of 90 days to allow us to gather --

THE COURT: Tell me what you need to do over those 90 days. It will include depositions.

MR. PUKNYS: It will include depositions not just of their declarants, but we want their inventors. We want sales and marketing people. You know, they paint a

00020

very drastic picture about what we've done to their business, but they focus on one customer, so we don't know how that is in the big scheme of things. I do know that the judge, and I can't remember who was the judge in the case -- they certainly do -- in the Motorola case, denied a motion for preliminary injunction. They didn't even seek a preliminary injunction in the Fairchild case. And they waited seven months for filing for preliminary injunction in this case. So we want to investigate that.

So what we want is very rapid discovery in the patent world of essentially the whole case so that we can defend ourselves with the full record. Obviously, the quicker schedule benefits them, because that does not allow us to defend ourselves and get the right information. So that's what we're asking for.

THE COURT: What about the fact that, evidently, the preliminary injunction is only on one claim of one patent? Would your discovery be targeted to that?

MR. PUKNYS: Well, all three inventors are relevant to that one claim. The technology is the same. It's -- the only thing that makes the one claim easier is the briefing. Discovery doesn't change at all because, regardless of how many claims are involved, we're going to need the same kind of discovery.

THE COURT: Well, and the discovery that you

00021

want to take, then, is that discovery that's going to be relevant to the merits of the case, whether it proceeds here or whether it proceeds in California? That is, you are not wasting any effort. Is that fair to say?

MR. PUKNYS: That's correct, your Honor. What we would use here in opposing their preliminary injunction motion would be relevant even if we went back to California.

THE COURT: This is all discovery that has to occur one way or another?

MR. PUKNYS: Yes, your Honor.

THE COURT: All right. And on the motion to dismiss, that would be fully briefed by, if not next week, the following week?

MR. PUKNYS: Yes. Our reply brief is due whenever the usual schedule applies, and I think that's the Tuesday, because Monday is a holiday.

THE COURT: And putting aside a preliminary injunction for a minute, is that the motion that you would request or think you need oral argument on? Let's just assume I was considering it separate from a preliminary injunction.

MR. PUKNYS: I think -- well, if oral argument would help your Honor, obviously we would come and do it. I'm always prepared and willing to do oral argument.

00022

THE COURT: All right. Thank you.

MR. PUKNYS: Okay.

THE COURT: Is there anything further that you wanted to address?

MR. PUKNYS: There is one more thing. And they have been good about getting us certain materials we've been asking for from the Fairchild case.

One of the problems is, is that there's a protective order in that case, and there are materials -- in fact, critical materials on how their expert applied the claims to the accused products, which obviously is relevant. We'll be looking for inconsistencies there. They can't give us that under the protective order, so we need to resolve something with Fairchild.

If we go forward on their schedule, we're not going to see that material and could, like I said, end up very drastically against our client if we don't -- if we can't get that material, and that impedes our defense somehow.

THE COURT: Let me ask you, before you sit down, I don't know if Judge Farnan discussed with you all the possibility of consenting to my jurisdiction in part or in full. The reason I raise that is that has implications for the timing. Obviously, what I think he intends to do is to refer these motions to me. The motion to dismiss is a case

00023

dispositive motion, so I'm only authorized to write a report and recommendation, which the losing party would have a right to take an appeal to Judge Farnan.

Actually, sorry about that. Yes. I'm right about that. So whoever I rule against would have ten days, I think it is, to go to Judge Farnan and get de novo review.

And the other motion, preliminary injunction, I've never looked at this, but I don't think it's technically case dispositive, so I could probably enter an order, but that is potentially reviewable if the losing side objects. I think you only get reviewed for clear error or of law or fact or abuse of discretion. But that could slow things down potentially as well.

So you do have the opportunity, if you want, to consent to me in full or in part just to resolve one or both of these motions. That would need to be unanimous. And if not unanimous, I don't need to know and don't want to no who doesn't agree to it. But it is at least something I throw out there.

I don't know if the parties have had a chance to consider that. I'm doubting it since you didn't expect to see me today.

MR. PUKNYS: Well, it's very possible that the preliminary injunction motion could become moot depending on

00024

the motion to dismiss, obviously.

THE COURT: Right.

MR. PUKNYS: But, yes, I have not had a chance to consider that, your Honor.

THE COURT: Is that something that I should give you folks an opportunity to think about? Is that considerable to do with the schedule?

MR. PUKNYS: Yes, your Honor. I think so.

THE COURT: All right. Well, I take it from that, I'm not going to rule before leaving court today, but I want to make sure we have a mechanism for you getting back to me on the consent issue and then I can factor that into my decision about the timing as we go forward.

So I will hear from him again, but I'm not letting you go yet.

MR. PUKNYS: Thanks.

THE COURT: Thank you.

MR. SCHERKENBACH: Your Honor, thank you.

Just on the consent issue, we can get back to you promptly on that. We obviously want to confer with our client.

THE COURT: Sure.

MR. SCHERKENBACH: But I will tell you, in all candor, I think it's unlikely simply because Judge Farnan -- he's just so familiar. If there needs to be a trial, it's

00025

just so efficient to have him do a trial.

THE COURT: Right.

MR. SCHERKENBACH: Now, pretrial, it's a whole lot more efficient to have you do everything, which he, I think, has recognized.

His comments to us indicated that, really, he would like, and we would be perfectly happy to have you decide everything up to essentially the pretrial conference and trial. I think -- one footnote. What Judge Farnan said to us was, if there needed to be a Markman hearing, there already have been on these patents.

THE COURT: Several.

MR. SCHERKENBACH: If there needs to be another one, which we obviously think there doesn't have to be, but put that to one side, he would probably do that.

THE COURT: Okay.

MR. SCHERKENBACH: But on everything else, report, recommendation from you, including discovery disputes and so on and so forth.

So our expectation would be, assuming the case isn't dismissed, that you would set a schedule up to and including pretrial and trial and consultation with whatever Judge Farnan's schedule is. Again, I think that's what he indicated to us. And do a report, recommendation.

THE COURT: All right.

00026

MR. SCHERKENBACH: So that's the consent issue.

If I could, I think maybe clarify or pick up on a couple of points. One is, obviously, whatever discovery is done here is relevant to California. I mean, they have filed a complaint. This case is going to be litigated. Really, in the big picture, this is now a venue dispute. It's jurisdictional. Yes, there has to be personal jurisdiction here. Yes, and we believe there is, and I'm not going to argue that. But in the end, now, it's really about the venue. They prefer California. We think it should be here.

There's no -- since it's going to be resolved somewhere on the merits, there's no reason to delay doing the work that needs to be done, and therefore no reason to put our preliminary injunction on ice completely, with all due respect.

THE COURT: Sure. Ninety days, I'm told, is a fairly quick amount of time for discovery.

MR. SCHERKENBACH: Yes. It's relatively quick, and I'm not going to jump up and down and say 90 days is going to kill us because I can't make that showing and it's not true.

You will reach your own decision on that when you see from the papers sort of what has actually transpired here.

00027

I mean, again, on the validity issues, they've been aware of the patent and the allegations since June of '07, when we filed in California, so there has been really quite a bit of time already. Surely, they've done something to start to defend themselves. Whether they need another 90 days or so, so be it.

We will cooperate with them on the depositions that they say they need. That's fine.

This point about needing Fairchild confidential information, with all respect, I don't think that one is right. The operation of Fairchild's chips and the way our expert analyzed those chips, I don't see how that has any bearing on this case. They know everything there is to know about their chips. The patent is public. There's nothing on the infringement side they should need from Fairchild, and as I say, on the prior art side, the validity side, that's all public as well.

You asked about -- that's the preliminary injunction issue. There is one other, just I will just sort of note it and you can make of it what you will. I don't know if it affects their timing request. They're in the middle of an IPO, which was filed for long after we sued them, so we had no knowledge of it. But they're very focused on that right now. In fact, they're making a road trip next week to the East Coast again in connection

00028

with that and that window was supposed to close, and it seems to us pretty clear they wanted that to close and wanted that to happen before they have to take a position on the preliminary injunction, making that what you will.

Last point.

THE COURT: What sort of response to why it took until the end of January 2008 for you to file a motion for preliminary injunction?

MR. SCHERKENBACH: There are really two practical reasons for that.

One is that our intention all along was to move for a preliminary injunction on the '876. The validity trial hadn't happened. If we had filed -- the validity trial was scheduled for the fall. If we had moved for a preliminary injunction before then, they would have said, how can you possibly entertain that, Judge? These patents might be invalidated by a jury in September in Wilmington. Okay. So it didn't make any sense.

After that, the other practical problem we had was we asked them to let our expert see their schematics and they said no, so we had to go reverse engineer the part.

In round numbers, that basically explains why we got to where we got. Now, maybe it was a month or so

00029

later because of the holidays. Again, I'm not going to tell you otherwise. But it's not that long of a delay and, in our view, there are good reasons why we filed it when we did.

We're prepared to deal with that in more detail in the context of the briefing if they raise it.

You asked about oral argument on the motion to dismiss. I mean, everyone is happy to show up for an oral argument if you want it. My own view is when you see the briefing, I doubt you're going to need it or want it.

There are -- they cite a case, primarily one case that's the centerpiece of their argument. We've presented a number of other cases. The fact patterns are what they are. The fact pattern in this case, frankly, is not really disputed.

So I think really it's pretty straightforward, but, again, we're happy to do that. I just hope we can do it as soon as possible, if you do want argument.

THE COURT: All right. Thank you. All right. Well, it sounds like what you need from me is a decision as to the timing of how we're going to deal with the preliminary injunction, because the motion to dismiss, briefing, that's going to be finished, and so it's really what can we do about preliminary injunction, and right now, the defendants would like 90 days to take discovery and

00030

respond, and your position is more in the neighborhood of 30 days? If you wanted to get to a hearing by the end of March --

MR. SCHERKENBACH: As I understand it, their 90 days is just to the filing of their briefs.

THE COURT: Right.

MR. SCHERKENBACH: We're more in the nature of 30, probably, so you're looking at about a 60-day difference, I would say.

THE COURT: You would probably want a couple weeks to respond to them?

MR. SCHERKENBACH: Right.

THE COURT: And then a couple weeks before the hearing. So their proposal is about 120 days.

MR. SCHERKENBACH: There is a possibility, I didn't raise it, but if they are going to have declarants in their opposition, we will have to fit in a deposition or two of their declarants it would be two or maybe three weeks for us to do a reply, yes.

THE COURT: All right. Now, do you both feel that I need to decide the going forward scheduling issues all the way through pretrial and trial at this time? It's obviously quite dependent on what happens on these two motions.

MR. SCHERKENBACH: We obviously do, and that

00031

has been my experience in the court. That may be one where, frankly, you want to talk to Judge Farnan and see what --

THE COURT: Sure.

MR. SCHERKENBACH: That's the implication that we got from him.

THE COURT: And you both submitted your proposed scheduling orders?

MR. SCHERKENBACH: Yes.

THE COURT: He has seen them?

MR. PUKNYS: That's correct. I don't see a need to, but neither do I see any reason not to.

THE COURT: Okay. All right. Well, here's what we're going to do. I'd like to hear, if one of you can just write me a letter, I'd like it by the end of the day tomorrow, if you don't think that's too quick of a turn-around, just letting me know whether you would unanimously consent in full, which I don't anticipate, figuring what you were saying about with Judge Farnan, which makes sense to me, and, if not, if you unanimously consent to my jurisdiction on either of the two pending motions. So that's all I need to know.

Can I have that answer by tomorrow?

MR. SCHERKENBACH: Absolutely.

MR. PUKNYS: Yes.

THE COURT: And then I will, after I have those

00032

answers, I will turn to, as quickly as I can, letting you know what the schedule is going to be in terms of preliminary injunction or whether I'm going to stay it pending resolution of the motion to dismiss, and I will also turn to entering the scheduling order.

MR. SCHERKENBACH: Very good.

THE COURT: Okay?

MR. SCHERKENBACH: Very good.

THE COURT: Is there anything I've left out or anything we need to discuss at this point?

MR. SCHERKENBACH: Nothing from plaintiff, your Honor.

MR. PUKNYS: No.

THE COURT: Good to see you all.

(Counsel respond, "Thank you your Honor.")

(Court recessed at 2:37 p.m.)

- - -

EXHIBIT U
(Excerpts - Deposition Transcript of Bruce Renouard, dated March 28, 2008 - Highly Confidential - Filed Under Seal)

REDACTED