FISH & RICHARDSON P.C.

Frederick P. Fish
1855-1930

W.K. Richardson
1859-1951

Suite 1100
919 N. Market Street
P.O. Box 1114
Wilmington, Delaware
19899-1114

Telephone
302 652-5070

Facsimile
302 652-0607

Web Site
www.fr.com

REDACTED

VIA ECF AND HAND DELIVERY

March 25, 2008

The Honorable Leonard P. Stark
United States District Court
for the District of Delaware
844 King Street
Wilmington, DE 19801

FR

ATLANTA
AUSTIN
BOSTON
DALLAS
DELAWARE
MUNICH
NEW YORK
SAN DIEGO
SILICON VALLEY
TWIN CITIES
WASHINGTON, DC

Re: *Power Integrations, Inc. v. BCD Semiconductor Corp.*
USDC-D. Del. – Civil Action No. 07-633 JJF-LPS

Dear Judge Stark:

The Court declined to stay discovery in this matter [D.I. 37 at 1], but defendants ("BCD") have refused to provide substantive discovery responses or to produce documents since serving their objections to Plaintiff Power Integrations interrogatories and requests for production in late February. [*See* Ex. A-B.] Since that time, Power Integrations repeatedly followed up with BCD [e.g. Exs. C-E], but BCD has not produced any further documents or contention interrogatory responses and even reneged on a promise to provide such further responses by March 14, relying instead on statements that it will produce some materials and will supplement some of its responses on April 1. [Ex. F.] Nevertheless, BCD maintains its refusal to produce product schematics for its full range of PWM controller products or to respond to interrogatories regarding its invalidity and non-infringement contentions. Therefore, Power Integrations submits this letter pursuant to the Court's procedures governing discovery disputes.

At this point, BCD's discovery responses are deficient in many respects, but this letter focuses on a few categories of critical documents and information. First and foremost, BCD has refused to produce product schematics for its full range of PWM controller products beyond the schematics for one part that are difficult to read. These materials are called for in Power Integrations' RFPs Nos. 5 and 53, among others, and at present Power Integrations believes BCD is offering for sale and/or selling no more than a half dozen PWM controller products and variants thereof, including the AP3700, AP3700A, AP3700E, AP3710, AP3706, and AP3708. [*See* Ex. G at Requests Nos. 5 and 53 and Definition No. 8.] Without full schematics for these products, Power Integrations and its expert cannot fully evaluate the products for infringement purposes and, instead, are left to rely on a presumption that all of the products contain the same infringing frequency jitter functionality found in the AP3700 chip based on the high level data sheet descriptions. BCD finally agreed to

produce a set of schematics for the AP3710 yesterday, but BCD's counsel was unable to confirm whether it will produce clean schematics for the AP3700 variants (or confirm there are no substantive differences between them), and BCD flatly refused to produce any schematics for its AP3706 or AP3708 products. BCD's response to Power Integrations' repeated requests has been to assert that the products are not relevant because they are not for sale or being offered for sale, but the data sheet for the AP3706 is available on BCD's web site with "Ordering Information" [*see, e.g.*, Ex. H at 4], and Power Integrations understands that BCD is actively seeking to take more business from Power Integrations by trying to design these chips into the products of major multinational customers. As a result, the product schematics are critically important to Power Integrations' case and the proper scope of the pending motion for preliminary injunction.

BCD has also refused to provide substantive responses to Power Integrations' Interrogatories Nos. 2-3 regarding BCD's non-infringement and invalidity contentions with respect to the patents-in-suit. BCD asserts that these responses are premature, but BCD sued Power Integrations seeking a Declaratory Judgment of non-infringement and invalidity, and, at the very least, Power Integrations is entitled to discovery of BCD's contentions that allegedly support the allegations in its complaint. At this time, BCD's response consists solely of a reference to pending reexamination requests that Fairchild filed for the '876 and '851 patents. [*See* Ex. A at 4-5.] BCD has suggested that it can withhold its contentions until the September 30 cutoff date for written discovery [Ex. F at 1], but in light of the Court's determination that it would not stay discovery, there is no basis for BCD's refusal to provide contention discovery responses regarding its present contentions and to timely supplement them in accordance with FRCP 26(e).

Power Integrations believes the Court would see numerous other deficiencies in a quick review of BCD's discovery responses, but we must at this time rely on BCD's stated commitment to supplement its other responses and to produce documents on April 1. Nevertheless, without BCD's schematics and contentions, Power Integrations is at a severe disadvantage with respect to the pending motions and cannot begin any follow-up discovery. As a result, Power Integrations respectfully requests that the Court order BCD to produce these materials as soon as possible.

Respectfully,

/s/ Kyle Wagner Compton

Kyle Wagner Compton

cc: Clerk of Court (w/attachment via ECF)
Steven J. Balick, Esquire (By Hand)
Erik Puknys, Esquire (By Federal Express)

Exhibit A

EXHIBIT REDACTED IN ITS ENTIRETY

Exhibit B

IN THE UNITED STATES DISTRICT COURT
FOR THE DISTRICT OF DELAWARE

POWER INTEGRATIONS, INC.,	)	
	)	
Plaintiff,	)	
	)	
v.	)	C.A. No. 07-633-JFF-LPS
	)	
BCD SEMICONDUCTOR CORPORATION and SHANGHAI SIM-BCD SEMICONDUCTOR MANUFACTURING CO., LTD.,	)	
	)	
Defendants.	)	

DEFENDANTS' RESPONSES AND OBJECTIONS TO PLAINTIFF'S FIRST SET OF REQUESTS FOR PRODUCTION OF DOCUMENTS AND THINGS (NOS. 1-68)

Pursuant to Rule 34 of the Federal Rules of Civil Procedure, Defendants BCD Semiconductor Manufacturing Corporation and Shanghai SIM-BCD Semiconductor Manufacturing Co., Ltd. (collectively "Defendants" or "BCD") hereby respond to the First Set of Requests for Production of Documents and Things (Nos. 1-68) served by Plaintiff Power Integrations, Inc. ("Plaintiff" or "Power Integrations") on January 25, 2008.

GENERAL OBJECTIONS

1. Nothing in these responses should be construed as waiving rights or objections that otherwise might be available to Defendants, nor should Defendants' answering any of these discovery requests be deemed an admission of the existence of any information sought, or of the relevancy, materiality, or admissibility in evidence of the discovery requests or the responses thereto.

2. Defendants object to the production of documents and things protected by the attorney-client privilege, work-product immunity, and/or any other applicable privilege or

immunity. To the extent that such documents and things not otherwise objectionable are called for by Power Integrations' requests, they will be identified in a listing of withheld documents, which will be exchanged with Power Integrations at a mutually agreed upon date.

3. The inadvertent production or disclosure by Defendants of documents containing information protected from discovery by the attorney-client privilege, the work product doctrine, and/or any other applicable privilege or immunity, is unintentional and shall not constitute a waiver by Defendants of such protection.

4. An objection based on the attorney-client privilege and/or the work product doctrine should not be construed as a representation that such documents exist or existed. Such objections indicate only that the requests are of such a scope as to embrace subject matter protected by the attorney-client privilege and/or work product doctrine.

5. To the extent that Power Integrations' requests seek information from or the production of documents from the internal work-product files of any of Defendants' counsel, including, but not limited to, Finnegan, Henderson, Farabow, Garrett & Dunner, L.L.P. and/or other attorneys representing or advising Defendants, Defendants object to either the production or the listing of these documents on a withheld document list.

6. Defendants object to Power Integrations' document requests to the extent the requests seek to require Defendants to provide any information beyond what is available to Defendants at present from a reasonable search of Defendants' physical files at their corporate headquarters, principal offices, and research and manufacturing facilities and from a reasonable inquiry of Defendants' present employees on the ground that such discovery sought is unduly burdensome to Defendants.

7. Defendants object to any document request to the extent Power Integrations seeks to impose on Defendants any burden and/or obligation in excess of those required by the Federal Rules of Civil Procedure, the Local Rules of this Court, or other applicable rule or law. Defendants also object generally to Plaintiff's requests as premature and untimely to the extent they seek Defendants' noninfringement contentions, invalidity contentions, claim construction positions, expert disclosure, and/or any opinion of counsel prior to the date for such disclosure under the Local Rules of this Court and/or the Scheduling Order entered by the Court.

8. Defendants object generally to Power Integrations' document requests to the extent the requests purport to require Defendants to search for information not within their possession, custody, or control on the ground that to do so would place an undue burden upon Defendants.

9. Defendants object generally to Power Integrations' document requests to the extent the requests seek production of documents and things containing both discoverable and nondiscoverable or objectionable material. Defendants reserve the right to redact from documents produced any matter that is not called for or with respect to which Defendants have objected to the request for production.

10. Because discovery is only beginning in this case, Defendants' answers to these requests for documents are by no means exhaustive. The following responses reflect Defendants' present knowledge, information, and belief and may be subject to change or modification based on Defendants' further discovery, and/or on facts or circumstances that may come to Defendants' knowledge. Defendants reserve the right to supplement their answers to these requests for documents and things.

11. Defendants object to the requests for documents and things to the extent that they call for the disclosure of trade secrets and/or other confidential and/or proprietary information that are outside the scope of discoverable subject matter as defined by Rule 26 or as provided by the Protective Order in this action. Defendants also object generally to the requests to the extent that they seek confidential information of third parties subject to a nondisclosure agreement or other obligations of secrecy.

12. A response that documents will be produced should not be construed as a representation that such documents exist or existed. Such responses indicate only that documents responsive to the request, subject to applicable objections, will be produced, if any such documents are found after a reasonable search.

13. Although Defendants object generally to Power Integrations' request that documents and things be produced at the offices of FISH & RICHARDSON P.C., 500 Arguello Street, Suite 500, Redwood City, California 94063, Defendants will forward to the offices of Fish & Richardson P.C. copies of produced documents. Nevertheless, Defendants retain the right to produce documents or things by making them available for inspection and copying by Power Integrations at BCD's or Finnegan, Henderson, Farabow, Garrett & Dunner, L.L.P.'s facilities.

14. Defendants object to the requests for documents to the extent that they call for information derived after the filing date of the lawsuit, which was derived in conjunction with or at the direction of counsel, that is subject to the attorney-client privilege or work-product immunity, and that would present a tremendous burden on Defendants to disclose in a privilege log.

15. Defendants object to the requests for documents as vague, unduly burdensome, overly broad, and irrelevant to the extent they ask Defendants to obtain or provide information for an unspecified or unlimited time period.

16. Defendants object to Plaintiff's requests to the extent they are duplicative or redundant of other requests. To the extent Defendants produce documents and information in response to one request, Defendants decline to produce multiple copies of the same documents merely because the same document is sought by other requests. Each document produced in response to a request is deemed to be produced in response to every other request to which it is or may be responsive.

17. Defendants object to any request as overly broad, unduly burdensome, and irrelevant to the extent that it includes products that were sold, offered for sale, or used outside the United States, or products manufactured outside of the United States and not offered for sale, sold, or used within the United States or imported into the United States.

18. Defendants object to any request as overly broad, unduly burdensome, and irrelevant to the extent it seeks information concerning products and/or features that are not alleged to infringe and/or are otherwise unrelated to the claims in the patent-in-suit.

19. Defendants object to any request as overly broad and unduly burdensome to the extent that the request seeks information that is already in the possession of Plaintiff, publicly available, or readily accessible to Plaintiff.

20. Defendants object to the production or identification of information in the possession or control of Defendants for which Defendants are obligated to a third party to maintain in confidence.

21. Defendants object to Power Integrations' definition of "BCD", "you", or "your" to mean "BCD Semiconductor Corporation and Shanghai SIM-BCD Semiconductor Manufacturing Co., LTD, including without limitation all of their corporate locations, predecessors, affiliates, successors, subsidiaries, divisions or parts thereof, all past or present directors, officers, agents, representatives, employees, consultants, attorneys, entities acting in joint-venture or partnership relationships with BCD Semiconductor Corporation and/or Shanghai SIM-BCD Semiconductor Manufacturing Co., LTD, and others acting on behalf of BCD Semiconductor Corporation and/or Shanghai SIM-BCD Semiconductor Manufacturing Co., LTD" on two bases. First, this definition is vague and ambiguous at least as to the terms "predecessors," "successors," "subsidiaries," and "divisions." Second, the definition is over broad and unduly burdensome to the extent it includes legal and natural persons not under the control of Defendants. For purposes of these responses, Defendants will construe "BCD", "you", and "your" to include only two named Defendants, BCD Semiconductor Corporation and Shanghai SIM-BCD Semiconductor Manufacturing Co., Ltd.

22. Defendants object to Power Integrations' definition of "Document" to the extent it is inconsistent with the usage of that term in Fed. R. Civ. P. 34(a).

23. Defendants object to Power Integrations' definition of "Product" as overly broad, unduly burdensome, irrelevant, vague, and ambiguous to the extent that it includes "those . . . under development" and seeks the production of information not relevant to any claim or defense and is not reasonably calculated to lead to the discovery of admissible evidence. Defendants also object to the definition of "Product" as overly broad, unduly burdensome, and irrelevant, to the extent that it includes products that were sold, offered for sale, or used outside the United States,

or products manufactured outside of the United States and not offered for sale, sold, or used within the United States or imported into the United States.

24. Defendants object to Power Integrations' definition of "Accused Product(s)" as overly broad, unduly burdensome, irrelevant, vague, and ambiguous to the extent it includes "all integrated circuit products described by BCD as 'pulse width modulation' or 'PWM' controllers . . . and any substantially identical controller chip" and seeks the production of information that is not relevant to any claim or defense and is not reasonably calculated to lead to the discovery of admissible evidence. Defendants also object to the definition of "Accused Product(s)" as overly broad, unduly burdensome, and irrelevant, to the extent that it includes products that were sold, offered for sale, or used outside the United States, or products manufactured outside of the United States and not offered for sale, sold, or used within the United States or imported into the United States.

25. The General Objections apply to all of Power Integrations' document requests. To the extent that specific General Objections are cited herein in response to specific document requests, those specific citations are provided because they are believed to be particularly applicable to the request and are not to be construed as a waiver of any other General Objections applicable to documents falling within the scope of the request.

SPECIFIC OBJECTIONS AND RESPONSES

REQUEST NO. 1:

All documents for which identification is requested in Power Integrations' First Set of Interrogatories to BCD, served concurrently herewith, or relied on in the preparation of BCD's responses to those interrogatories.

RESPONSE TO REQUEST NO. 1:

In addition to their General Objections, Defendants object to this request as overly broad, unduly burdensome, and irrelevant to the extent that it seeks "all documents."

Subject to the foregoing General and Specific Objections and pursuant to the Court's discovery orders in this case, Defendants will produce relevant, responsive, and non-privileged documents, to the extent they exist and can be found after a reasonable search and are in the possession, custody, or control of Defendants.

REQUEST NO. 2:

All documents sufficient to determine the organizational structure of BCD, including parent, subsidiary, or other affiliated corporations.

RESPONSE TO REQUEST NO. 2:

In addition to their General Objections, Defendants object to this request as overly broad, unduly burdensome, and irrelevant to the extent that it seeks "all documents." Defendants also object to this request as vague, ambiguous, and unduly burdensome with respect to at least the term "affiliated corporations" as used in this request.

Subject to the foregoing General and Specific Objections and pursuant to the Court's discovery orders in this case, Defendants will produce relevant, responsive, and non-privileged documents, to the extent they exist and can be found after a reasonable search and are in the possession, custody, or control of Defendants.

REQUEST NO. 3:

All documents that refer or relate to the research, development, and testing of the Accused Products, including but not limited to drawings, prototypes, notes, notebooks, workbooks, project reports, correspondence, memoranda, and test results.

RESPONSE TO REQUEST NO. 3:

In addition to their General Objections, Defendants object to this request as overly broad, unduly burdensome, irrelevant, vague, and ambiguous to the extent it seeks "all documents that refer or relate to."

Subject to the foregoing General and Specific Objections and pursuant to the Court's discovery orders in this case, Defendants will produce relevant, responsive, and non-privileged documents, to the extent they exist and can be found after a reasonable search and are in the possession, custody, or control of Defendants.

REQUEST NO. 4:

All documents that refer or relate to the design of the Accused Products, including but not limited to specifications, data sheets, drawings, diagrams, schematics, manuals, notes, notebooks, workbooks, correspondence, and memoranda.

RESPONSE TO REQUEST NO. 4:

In addition to their General Objections, Defendants object to this request as overly broad, unduly burdensome, irrelevant, vague, and ambiguous to the extent it seeks "all documents that refer or relate to."

Subject to the foregoing General and Specific Objections and pursuant to the Court's discovery orders in this case, Defendants will produce relevant, responsive, and non-privileged documents, to the extent they exist and can be found after a reasonable search and are in the possession, custody, or control of Defendants.

REQUEST NO. 5:

Documents sufficient to show the detailed internal structure, function, or operation of the Accused Products, including but not limited to drawings, schematics, data sheets, block diagrams, and operating instructions.

RESPONSE TO REQUEST NO. 5:

Subject to the foregoing General Objections and pursuant to the Court's discovery orders in this case, Defendants will produce relevant, responsive, and non-privileged documents, to the extent they exist and can be found after a reasonable search and are in the possession, custody, or control of Defendants.

REQUEST NO. 6:

All documents that refer or relate to the research, development, and testing of any downstream product incorporating any Accused Product, including but not limited to notes, notebooks, workbooks, correspondence, memoranda, and test results.

RESPONSE TO REQUEST NO. 6:

In addition to their General Objections, Defendants object to this request as overly broad, unduly burdensome, irrelevant, vague, and ambiguous to the extent that it seeks "all documents that refer or relate to."

Subject to the foregoing General and Specific Objections and pursuant to the Court's discovery orders in this case, Defendants will produce relevant, responsive, and non-privileged documents, to the extent they exist and can be found after a reasonable search and are in the possession, custody, or control of Defendants.

REQUEST NO. 7:

All documents that refer or relate to the use of any Accused Product, including but not limited to instructions for use, specifications, data sheets, reference designs, drawings, schematics, diagrams, manuals, notes, notebooks, workbooks, correspondence, memoranda, and demonstration boards.

RESPONSE TO REQUEST NO. 7:

In addition to their General Objections, Defendants object to this request as overly broad, unduly burdensome, irrelevant, vague, and ambiguous to the extent that it seeks "all documents that refer or relate to." Defendants further object to this request as overly broad and unduly burdensome to the extent that the request seeks information that is already in the possession of Plaintiff, publicly available, or readily accessible to Plaintiff. Defendants also object to this request to the extent it is duplicative.

Subject to the foregoing General and Specific Objections and pursuant to the Court's discovery orders in this case, Defendants will produce relevant, responsive, and non-privileged

documents, to the extent they exist and can be found after a reasonable search and are in the possession, custody, or control of Defendants.

REQUEST NO. 8:

All documents that refer or relate to the manufacture, fabrication, and production of the Accused Products, from 2006 to the present, including but not limited to the location of all manufacturing, fabrication, and production facilities and the quantity of each accused Product manufactured, fabricated, or produced at each such facility.

RESPONSE TO REQUEST NO. 8:

In addition to their General Objections, Defendants object to this request as overly broad, unduly burdensome, irrelevant, vague, and ambiguous to the extent it uses the term "all documents that refer or relate to."

Subject to the foregoing General and Specific Objections and pursuant to the Court's discovery orders in this case, Defendants will produce relevant, responsive, and non-privileged documents, to the extent they exist and can be found after a reasonable search and are in the possession, custody, or control of Defendants.

REQUEST NO. 9:

All documents that refer or relate to advertising and marketing of the Accused Products from 2006 to the present, including but not limited to promotional materials, press releases, trade journal articles, advertisements, catalogs, documents prepared for trade journal articles, advertisements, catalogs, documents prepared for trade shows and meetings, package inserts, technical data sheets, specifications, price lists, sales presentations, and sales and marketing forecasts and projections.

RESPONSE TO REQUEST NO. 9:

In addition to their General Objections, Defendants also object to this request overly broad, unduly burdensome, irrelevant, vague, and ambiguous to the extent that it seeks "all documents that refer or relate to." Defendants also object to this request to the extent it is duplicative.

Subject to the foregoing General and Specific Objections and pursuant to the Court's discovery orders in this case, Defendants will produce relevant, responsive, and non-privileged documents, to the extent they exist and can be found after a reasonable search and are in the possession, custody, or control of Defendants.

REQUEST NO. 10:

All documents that refer or relate to sale of the Accused Products, from 2006 to the present, including but not limited to documents sufficient to show BCD's actual and expected gross revenues, net profits, gross revenues, sales, sales prices, and returns of the Accused Products.

RESPONSE TO REQUEST NO. 10:

In addition to their General Objections, Defendants object to this request as overly broad, unduly burdensome, irrelevant, vague, and ambiguous to the extent that it uses the terms "all documents," "relate to," and "expected."

Subject to the foregoing General and Specific Objections and pursuant to the Court's discovery orders in this case, Defendants will produce relevant, responsive, and non-privileged documents, to the extent they exist and can be found after a reasonable search and are in the possession, custody, or control of Defendants, that show the revenues received for the AP3700 and associated costs of manufacturing, marketing, and selling.

REQUEST NO. 11:

All documents that have been or are included with the sale or distribution of the Accused Products or products containing same, including without limitation instruction manuals, instructions for use, data sheets, and/or specifications.

RESPONSE TO REQUEST NO. 11:

In addition to their General Objections, Defendants object to this request to the extent it is duplicative.

Subject to the foregoing General and Specific Objections and pursuant to the Court's discovery orders in this case, Defendants will produce relevant, responsive, and non-privileged documents, to the extent they exist and can be found after a reasonable search and are in the possession, custody, or control of Defendants.

REQUEST NO. 12:

All documents referring or relating to the distribution network maintained by BCD for purposes of selling, distributing, or licensing the Accused Products and products containing same.

RESPONSE TO REQUEST NO. 12:

In addition to their General Objections, Defendants object to this request as overly broad, unduly burdensome, irrelevant, vague, and ambiguous to the extent it uses the terms "all documents referring or relating to," "distribution network," and "maintained."

Subject to the foregoing General and Specific Objections and pursuant to the Court's discovery orders in this case, Defendants will produce relevant, responsive, and non-privileged documents, to the extent they exist and can be found after a reasonable search and are in the possession, custody, or control of Defendants.

REQUEST NO. 13:

All documents that refer or relate to the importation into the United States of the Accused Products and any product incorporating an Accused Product, from 2006 to the present, including but not limited to the quantity of Accused Products (specifically identified by product) imported into the United States, and the dates of such importation.

RESPONSE TO REQUEST NO. 13:

In addition to their General Objections, Defendants object to this request as overly broad, unduly burdensome, irrelevant, vague, and ambiguous to the extent it seeks "all documents that refer or relate to."

Subject to the foregoing General and Specific Objections and pursuant to the Court's discovery orders in this case, Defendants will produce relevant, responsive, and non-privileged documents, to the extent they exist and can be found after a reasonable search and are in the possession, custody, or control of Defendants.

REQUEST NO. 14:

All documents that refer or relate to any downstream product(s) into which any Accused Product is or has been incorporated, from 1998 to the present.

RESPONSE TO REQUEST NO. 14:

In addition to their General Objections, Defendants object to this request as overly broad, unduly burdensome, irrelevant, vague, and ambiguous to the extent that it seeks "all documents that refer or relate to." Defendants further object to this request as overly broad and unduly burdensome to the extent that the request seeks information that is already in the possession of Plaintiff, publicly available, or readily accessible to Plaintiff.

Subject to the foregoing General and Specific Objections and pursuant to the Court's discovery orders in this case, Defendants will produce relevant, responsive, and non-privileged documents, to the extent they exist and can be found after a reasonable search and are in the possession, custody, or control of Defendants.

REQUEST NO. 15:

Documents sufficient to show the structure, operation, and function of any downstream product(s) into which any Accused Product is or has been incorporated, including but not limited to drawings and schematics.

RESPONSE TO REQUEST NO. 15:

Subject to the foregoing General Objections and pursuant to the Court's discovery orders in this case, Defendants will produce relevant, responsive, and non-privileged documents, to the

extent they exist and can be found after a reasonable search and are in the possession, custody, or control of Defendants.

REQUEST NO. 16:

Documents sufficient to identify each and every Accused Product that has been imported into the United States, sold for importation into the United States, or sold or offered for sale after importation into the United States, from 2006 to the present.

RESPONSE TO REQUEST NO. 16:

In addition to their General Objections, Defendants object to this request to the extent it is duplicative.

Subject to the foregoing General and Specific Objections and pursuant to the Court's discovery orders in this case, Defendants have no responsive documents.

REQUEST NO. 17:

Documents sufficient to identify each and every downstream product incorporating an Accused Product that is or has been imported into the United States, sold for importation into the United States, or sold or offered for sale after importation into the United States, from 2006 to the present.

RESPONSE TO REQUEST NO. 17:

Subject to the foregoing General Objections and pursuant to the Court's discovery orders in this case, Defendants have no responsive documents.

REQUEST NO. 18:

All documents that refer or relate to any actual or proposed modification, improvement, or change in any Accused Product, or any method and/or process of using any Accused Product, including attempts to design or re-design products or methods and/or processes to avoid infringement of any of the patents-in-suit.

RESPONSE TO REQUEST NO. 18:

In addition to their General Objections, Defendants object to this request as overly broad, unduly burdensome, irrelevant, vague, and ambiguous to the extent it uses the terms "all

documents that refer or relate to," "proposed," "improvement," and "attempts to." Defendants also object to this request to the extent it is duplicative.

Subject to the foregoing General and Specific Objections and pursuant to the Court's discovery orders in this case, Defendants will produce relevant, responsive, and non-privileged documents, to the extent they exist and can be found after a reasonable search and are in the possession, custody, or control of Defendants.

REQUEST NO. 19:

Documents sufficient to identify each and every Accused Product that is being planned, that has been designed, and/or that is in development.

RESPONSE TO REQUEST NO. 19:

Subject to the foregoing General Objections and pursuant to the Court's discovery orders in this case, Defendants will produce relevant, responsive, and non-privileged documents, to the extent they exist and can be found after a reasonable search and are in the possession, custody, or control of Defendants.

REQUEST NO. 20:

Five (5) samples of each version of each Accused Product, and all literature or documentation distributed with each Accused Product.

RESPONSE TO REQUEST NO. 20:

In addition to their General Objections, Defendants object to this request as overly broad, unduly burdensome, irrelevant, vague, and ambiguous to the extent that it uses the terms "all literature or documentation" and "distributed with." Defendants also object to this request to the extent it is duplicative.

Subject to the foregoing General and Specific Objections and pursuant to the Court's discovery orders in this case, Defendants will produce relevant, responsive, and non-privileged

documents, to the extent they exist and can be found after a reasonable search and are in the possession, custody, or control of Defendants.

REQUEST NO. 21:

All documents discussing or making reference to the quality, value, acceptability, workability, performance, or benefits of any Accused Product, including communications with anyone who has used an Accused Product praising, criticizing, or otherwise commenting on any Accused Product(s).

RESPONSE TO REQUEST NO. 21:

In addition to their General Objections, Defendants object to this request as overly broad, unduly burdensome, irrelevant, vague, and ambiguous to the extent it uses the terms "all documents," "acceptability," "workability," and "benefits."

Subject to the foregoing General and Specific Objections and pursuant to the Court's discovery orders in this case, Defendants will produce relevant, responsive, and non-privileged documents, to the extent they exist and can be found after a reasonable search and are in the possession, custody, or control of Defendants.

REQUEST NO. 22:

All technical articles, conference papers, and technical or marketing presentations that refer or relate to any Accused Product and products containing same, the method and/or process of using any Accused Product and products containing same, or that relate to the subject matter described in the patents-in-suit.

RESPONSE TO REQUEST NO. 22:

In addition to their General Objections, Defendants object to this request as overly broad, unduly burdensome, irrelevant, vague, and ambiguous to the extent it uses the terms "all [articles, papers, and presentations] that refer or relate to."

Subject to the foregoing General and Specific Objections and pursuant to the Court's discovery orders in this case, Defendants will produce relevant, responsive, and non-privileged

documents, to the extent they exist and can be found after a reasonable search and are in the possession, custody, or control of Defendants.

REQUEST NO. 23:

All documents that refer or relate to any failures, problems with and/or complaints about any of the Accused Products and products containing same or the method and/or process of using any Accused Product and products containing same.

RESPONSE TO REQUEST NO. 23:

In addition to their General Objections, Defendants object to this request as overly broad, unduly burdensome, irrelevant, vague, and ambiguous to the extent it uses the terms "all documents that refer or relate to," "failure," "problems with," and "complaints."

Subject to the foregoing General and Specific Objections and pursuant to the Court's discovery orders in this case, Defendants will produce relevant, responsive, and non-privileged documents, to the extent they exist and can be found after a reasonable search and are in the possession, custody, or control of Defendants.

REQUEST NO. 24:

All documents that refer or relate to uses, tests, or evaluations of the Accused Products and products containing same or the method and/or process of using any Accused Product and products containing same performed or conducted by BCD, BCD's customers, or any other third party that BCD is aware of.

RESPONSE TO REQUEST NO. 24:

In addition to their General Objections, Defendants object to this request as overly broad, unduly burdensome, irrelevant, vague, and ambiguous to the extent that it seeks "all documents that refer or relate to."

Subject to the foregoing General and Specific Objections and pursuant to the Court's discovery orders in this case, Defendants will produce relevant, responsive, and non-privileged

documents, to the extent they exist and can be found after a reasonable search and are in the possession, custody, or control of Defendants.

REQUEST NO. 25:

Documents sufficient to identify BCD's customers, purchasers, and resellers for the Accused Products or products containing same, from 2006 to the present.

RESPONSE TO REQUEST NO. 25:

Subject to the foregoing General Objections and pursuant to the Court's discovery orders in this case, Defendants will produce relevant, responsive, and non-privileged documents, to the extent they exist and can be found after a reasonable search and are in the possession, custody, or control of Defendants.

REQUEST NO. 26:

All documents that refer or relate to training any customer in the use of the Accused products or products containing same.

RESPONSE TO REQUEST NO. 26:

In addition to their General Objections, Defendants object to this request as overly broad, unduly burdensome, irrelevant, vague, and ambiguous to the extent that it seeks "all documents that refer or relate to."

Subject to the foregoing General and Specific Objections and pursuant to the Court's discovery orders in this case, Defendants will produce relevant, responsive, and non-privileged documents, to the extent they exist and can be found after a reasonable search and are in the possession, custody, or control of Defendants.

REQUEST NO. 27:

All documents referring to, relating to, or constituting patents, publications, written descriptions, or prior art references of which you are aware that concern, disclose, describe, or claim any invention disclosed, described or claimed in any of the patents-in-suit, or any product or method and/or process embodying or using any invention disclosed, described or claimed in any of the patents-in-suit.

RESPONSE TO REQUEST NO. 27:

In addition to their General Objections, Defendants object to this request as overly broad, unduly burdensome, irrelevant, vague, and ambiguous to the extent that it seeks "all documents referring to, relating to, or constituting." Defendants also object to this request as premature to the extent it seeks Defendants' noninfringement contentions, invalidity contentions, claim construction positions, expert disclosure, and/or any opinion of counsel that may be relied upon by Defendants as part of their defense to the claims of infringement prior to the date for such disclosure under the Local Rules and/or the Scheduling Order entered by the Court. Defendants also object to this request to the extent it requires or seeks a legal conclusion.

Subject to the foregoing General and Specific Objections and pursuant to the Court's discovery orders in this case, Defendants will produce relevant, responsive, and non-privileged documents, to the extent they exist and can be found after a reasonable search and are in the possession, custody, or control of Defendants.

REQUEST NO. 28:

All documents that refer or relate to any document, reference, or activity alleged by anyone to be prior art to the patents-in-suit, or to affect the validity, enforceability, or scope of any of the patents-in-suit.

RESPONSE TO REQUEST NO. 28:

In addition to their General Objections, Defendants object to this request as overly broad, unduly burdensome, irrelevant, vague, and ambiguous to the extent that it seeks "all documents that refer or relate to." Defendants further object to this request as premature to the extent it seeks Defendants' noninfringement contentions, invalidity contentions, claim construction positions, expert disclosure, and/or any opinion of counsel that may be relied upon by Defendants as part of their defense to the claims of infringement prior to the date for such disclosure under the Local Rules and/or the Scheduling Order entered by the Court. Defendants

also object to this request to the extent it requires or seeks a legal conclusion. Moreover, Defendants object to this request to the extent it is duplicative.

Subject to the foregoing General and Specific Objections and pursuant to the Court's discovery orders in this case, Defendants will produce relevant, responsive, and non-privileged documents, to the extent they exist and can be found after a reasonable search and are in the possession, custody, or control of Defendants.

REQUEST NO. 29:

All documents that refer or relate to knowledge or use by others of any invention disclosed, described, or claimed in any of the patents-in-suit, including assessments by others of the scope, infringement, or validity of any of the patents-in-suit.

RESPONSE TO REQUEST NO. 29:

In addition to their General Objections, Defendants object to this request as overly broad, unduly burdensome, irrelevant, vague, and ambiguous to the extent that it seeks "all documents that refer or relate to." In addition, Defendants object to this request as premature to the extent it seeks Defendants' noninfringement contentions, invalidity contentions, claim construction positions, expert disclosure, and/or any opinion of counsel that may be relied upon by Defendants as part of their defense to the claims of infringement prior to the date for such disclosure under the Local Rules and/or the Scheduling Order entered by the Court. Defendants also object to this request to the extent it requires or seeks a legal conclusion.

Subject to the foregoing General and Specific Objections and pursuant to the Court's discovery orders in this case, Defendants will produce relevant, responsive, and non-privileged documents, to the extent they exist and can be found after a reasonable search and are in the possession, custody, or control of Defendants.

REQUEST NO. 30:

All documents that refer or relate to the making or use in this or another country of any invention disclosed, described, or claimed in the patents-in-suit, by one who had not abandoned, suppressed, or concealed it, that render any of the patents-in-suit invalid or unenforceable.

RESPONSE TO REQUEST NO. 30:

In addition to their General Objections, Defendants object to this request as overly broad, unduly burdensome, irrelevant, vague, and ambiguous to the extent that it seeks "all documents that refer or relate to." Defendants further object to this request as premature to the extent it seeks Defendants' noninfringement contentions, invalidity contentions, claim construction positions, expert disclosure, and/or any opinion of counsel that may be relied upon by Defendants as part of their defense to the claims of infringement prior to the date for such disclosure under the Local Rules and/or the Scheduling Order entered by the Court. Moreover, Defendants object to this request to the extent it requires or seeks a legal conclusion.

Subject to the foregoing General and Specific Objections and pursuant to the Court's discovery orders in this case, Defendants will produce relevant, responsive, and non-privileged documents, to the extent they exist and can be found after a reasonable search and are in the possession, custody, or control of Defendants.

REQUEST NO. 31:

All documents that BCD believes either alone or in combination anticipate or render obvious or in any other way render any of the patents-in-suit invalid or unenforceable.

RESPONSE TO REQUEST NO. 31:

In addition to their General Objections, Defendants object to this request as overly broad and unduly burdensome to the extent that the request seeks information that is already in the possession of Plaintiff, publicly available, or readily accessible to Plaintiff. Defendants also object to this request as premature to the extent it seeks Defendants' noninfringement

contentions, invalidity contentions, claim construction positions, expert disclosure, and/or any opinion of counsel that may be relied upon by Defendants as part of their defense to the claims of infringement prior to the date for such disclosure under the Local Rules and/or the Scheduling Order entered by the Court. In addition, Defendants object to this request to the extent it requires or seeks a legal conclusion. Defendants further object to this request to the extent it is duplicative.

Subject to the foregoing General and Specific Objections and pursuant to the Court's discovery orders in this case, Defendants will produce relevant, responsive, and non-privileged documents, to the extent they exist and can be found after a reasonable search and are in the possession, custody, or control of Defendants.

REQUEST NO. 32:

All documents that refer or relate to any prior art reference or potential prior art reference located, reviewed by, or cited to you during any study or search of domestic or foreign patents, literature, or other published materials relating in any manner to any of the patents-in-suit, including without limitation any study, search, or analysis to determine the patentability, validity, enforceability, or enforceable scope of any of the claims of any of the patents-in-suit.

RESPONSE TO REQUEST NO. 32:

In addition to their General Objections, Defendants object to this request as overly broad, unduly burdensome, irrelevant, vague, and ambiguous to the extent it uses the terms "all documents that refer or relate to" and "potential prior art reference." In addition, Defendants object to this request as premature to the extent it seeks Defendants' noninfringement contentions, invalidity contentions, claim construction positions, expert disclosure, and/or any opinion of counsel that may be relied upon by Defendants as part of their defense to the claims of infringement prior to the date for such disclosure under the Local Rules and/or the Scheduling Order entered by the Court. Defendants also object to this request to the extent it requires or

seeks a legal conclusion. Moreover, Defendants object to this request to the extent it is duplicative.

Subject to the foregoing General and Specific Objections and pursuant to the Court's discovery orders in this case, Defendants will produce relevant, responsive, and non-privileged documents, to the extent they exist and can be found after a reasonable search and are in the possession, custody, or control of Defendants.

REQUEST NO. 33:

All documents, including without limitation articles and internal technical memoranda authored by you that relate to the subject matter described, disclosed, or claimed in any of the patents-in-suit.

RESPONSE TO REQUEST NO. 33:

In addition to their General Objections, Defendants object to this request as overly broad, unduly burdensome, irrelevant, vague, and ambiguous to the extent it seeks "all documents . . . that relate to." Defendants also object to this request to the extent it requires or seeks a legal conclusion.

Subject to the foregoing General and Specific Objections and pursuant to the Court's discovery orders in this case, Defendants will produce relevant, responsive, and non-privileged documents, to the extent they exist and can be found after a reasonable search and are in the possession, custody, or control of Defendants.

REQUEST NO. 34:

All patents and patent applications (and related prosecution histories) owned, licensed, or controlled by BCD, from any jurisdiction, that refer or relate to the Accused Products or the method and/or process of using any Accused Product or products containing same.

RESPONSE TO REQUEST NO. 34:

In addition to their General Objections, Defendants object to this request as overly broad, unduly burdensome, irrelevant, vague, and ambiguous to the extent it uses the term "all [patents, applications, and file histories] that refer or relate to."

Subject to the foregoing General and Specific Objections and pursuant to the Court's discovery orders in this case, Defendants will produce relevant, responsive, and non-privileged documents, to the extent they exist and can be found after a reasonable search and are in the possession, custody, or control of Defendants.

REQUEST NO. 35:

All documents referring or relating to when and how BCD first became aware of each of the patents-in-suit.

RESPONSE TO REQUEST NO. 35:

In addition to their General Objections, Defendants object to this request as overly broad, unduly burdensome, irrelevant, vague, and ambiguous to the extent it uses the terms "all documents referring or relating to" and "became aware of."

Subject to the foregoing General and Specific Objections and pursuant to the Court's discovery orders in this case, Defendants will produce relevant, responsive, and non-privileged documents, to the extent they exist and can be found after a reasonable search and are in the possession, custody, or control of Defendants.

REQUEST NO. 36:

All documents that relate or refer to any communication between BCD and any other person regarding any of the patents-in-suit or this litigation, including without limitation any reports, statements, or analyses by third parties.

RESPONSE TO REQUEST NO. 36:

In addition to their General Objections, Defendants object to this request as overly broad, unduly burdensome, irrelevant, vague, and ambiguous to the extent that it seeks "all documents that relate or refer to."

Subject to the foregoing General and Specific Objections and pursuant to the Court's discovery orders in this case, Defendants will produce relevant, responsive, and non-privileged documents, to the extent they exist and can be found after a reasonable search and are in the possession, custody, or control of Defendants.

REQUEST NO. 37:

All documents referring or relating to any evaluation of possible liability for patent infringement should BCD commence or continue to make, use, distribute, or sell the Accused Products or products containing same, including without limitation any internal notes or memoranda.

RESPONSE TO REQUEST NO. 37:

In addition to their General Objections, Defendants object to this request as overly broad, unduly burdensome, irrelevant, vague, and ambiguous to the extent that it seeks "all documents referring or relating to."

Subject to the foregoing General and Specific Objections and pursuant to the Court's discovery orders in this case, Defendants will produce relevant, responsive, and non-privileged documents, to the extent they exist and can be found after a reasonable search and are in the possession, custody, or control of Defendants.

REQUEST NO. 38:

All documents referring or relating to any patentability or prior art investigations, search, study, evaluation, review, monitoring, or testing related to any of the patents-in-suit, including, but not limited to, documents relating to whether any Accused Product does or does not infringe any claim of any of the patents-in-suit, either literally or by equivalents.

RESPONSE TO REQUEST NO. 38:

In addition to their General Objections, Defendants object to this request as overly broad, unduly burdensome, irrelevant, vague, and ambiguous to the extent that it seeks "all documents referring or relating to." Defendants also object to this request to the extent it is duplicative.

Subject to the foregoing General and Specific Objections and pursuant to the Court's discovery orders in this case, Defendants will produce relevant, responsive, and non-privileged documents, to the extent they exist and can be found after a reasonable search and are in the possession, custody, or control of Defendants.

REQUEST NO. 39:

Documents sufficient to describe BCD's document retention, management, and/or destruction policies, including those with respect to e-mail, from 2006 to the present.

RESPONSE TO REQUEST NO. 39:

In addition to their General Objections, Defendants object to this request as overly broad, unduly burdensome, and irrelevant to the extent that it seeks information outside any relevant time period.

Subject to the foregoing General and Specific Objections and pursuant to the Court's discovery orders in this case, Defendants will produce relevant, responsive, and non-privileged documents, to the extent they exist and can be found after a reasonable search and are in the possession, custody, or control of Defendants.

REQUEST NO. 40:

To the extent not produced in response to a previous request, all documents, including communications between BCD and other persons, which refer to Power Integrations, Power Integrations' patents, or any Power Integrations product.

RESPONSE TO REQUEST NO. 40:

In addition to their General Objections, Defendants object to this request as overly broad, unduly burdensome, and irrelevant to the extent that it seeks "all documents." Defendants further object to the production or identification of information in the possession or control of Defendants for which Defendants are obligated to a third party to maintain in confidence. In addition, Defendants object to this request as overly broad and unduly burdensome to the extent that the request seeks information that is already in the possession of Plaintiff, publicly available, or readily accessible to Plaintiff.

Subject to the foregoing General and Specific Objections and pursuant to the Court's discovery orders in this case, Defendants will produce relevant, responsive, and non-privileged documents, to the extent they exist and can be found after a reasonable search and are in the possession, custody, or control of Defendants.

REQUEST NO. 41:

To the extent not produced in response to previous requests, all documents referring or relating to the design, development, testing, simulation, or operation of the Accused Products, including without limitation complete laboratory notebooks, schematics, engineering specifications, CAD files, and simulation files, in both hardcopy and electronic format.

RESPONSE TO REQUEST NO. 41:

In addition to their General Objections, Defendants object to this request as overly broad, unduly burdensome, irrelevant, vague, and ambiguous to the extent that it seeks "all documents referring or relating to."

Subject to the foregoing General and Specific Objections and pursuant to the Court's discovery orders in this case, Defendants will produce relevant, responsive, and non-privileged documents, to the extent they exist and can be found after a reasonable search and are in the possession, custody, or control of Defendants.

REQUEST NO. 42:

To the extent not produced in response to previous requests, all documents referring, relating to, or constituting any communications between, among, or within BCD Semiconductor Corporation and Shanghai SIM-BCD Semiconductor Manufacturing, Co., Ltd., or any worldwide sales agents acting on behalf of BCD, regarding any of the Accused Products, including without limitation electronic mail in both hardcopy and electronic format.

RESPONSE TO REQUEST NO. 42:

In addition to their General Objections, Defendants object to this request as overly broad, unduly burdensome, irrelevant, vague, and ambiguous to the extent that it seeks "all documents referring, relating to, or constituting."

Subject to the foregoing General and Specific Objections and pursuant to the Court's discovery orders in this case, Defendants will produce relevant, responsive, and non-privileged documents, to the extent they exist and can be found after a reasonable search and are in the possession, custody, or control of Defendants.

REQUEST NO. 43:

All documents referring or relating to any relationship between BCD Semiconductor Corporation and Shanghai SIM-BCD Semiconductor Manufacturing, Co., Ltd., including any worldwide sales agents acting on behalf of BCD, including without limitation any agreements, contracts, and/or licenses.

RESPONSE TO REQUEST NO. 43:

In addition to their General Objections, Defendants object to this request as overly broad, unduly burdensome, irrelevant, vague, and ambiguous to the extent that it seeks "all documents referring or relating to."

Subject to the foregoing General and Specific Objections and pursuant to the Court's discovery orders in this case, Defendants will produce relevant, responsive, and non-privileged documents, to the extent they exist and can be found after a reasonable search and are in the possession, custody, or control of Defendants.

REQUEST NO. 44:

All documents referring to, relating to, or comprising any license entered into or proposed by BCD to obtain rights to make, use, or sell the Accused Products or products containing same.

RESPONSE TO REQUEST NO. 44:

In addition to their General Objections, Defendants object to this request as overly broad, unduly burdensome, irrelevant, vague, and ambiguous to the extent that it seeks "all documents referring to, relating to, or comprising." Defendants also object to this request to the extent it is duplicative.

Subject to the foregoing General and Specific Objections and pursuant to the Court's discovery orders in this case, Defendants will produce relevant, responsive, and non-privileged documents, to the extent they exist and can be found after a reasonable search and are in the possession, custody, or control of Defendants.

REQUEST NO. 45:

All documents referring to, relating to, or comprising any contract or agreement by BCD to take a license to make, use, or sell any of the Accused Products or products containing same.

RESPONSE TO REQUEST NO. 45:

In addition to their General Objections, Defendants object to this request as overly broad, unduly burdensome, irrelevant, vague, and ambiguous to the extent that it seeks "all documents referring to, relating to, or comprising." Defendants also object to this request to the extent it is duplicative.

Subject to the foregoing General and Specific Objections and pursuant to the Court's discovery orders in this case, Defendants will produce relevant, responsive, and non-privileged documents, to the extent they exist and can be found after a reasonable search and are in the possession, custody, or control of Defendants.

REQUEST NO. 46:

All documents referring to, relating to, or comprising any decision by BCD to issue a license to any person for rights to any of the Accused Products or products containing same.

RESPONSE TO REQUEST NO. 46:

In addition to their General Objections, Defendants object to this request as overly broad, unduly burdensome, irrelevant, vague, and ambiguous to the extent that it seeks "all documents referring to, relating to, or comprising."

Subject to the foregoing General and Specific Objections and pursuant to the Court's discovery orders in this case, Defendants will produce relevant, responsive, and non-privileged documents, to the extent they exist and can be found after a reasonable search and are in the possession, custody, or control of Defendants.

REQUEST NO. 47:

All documents referring to, relating to, or comprising any request by any person for a license or indemnity from BCD for any of the Accused Products or products containing same.

RESPONSE TO REQUEST NO. 47:

In addition to their General Objections, Defendants object to this request as overly broad, unduly burdensome, irrelevant, vague, and ambiguous to the extent that it seeks "all documents referring to, relating to, or comprising."

Subject to the foregoing General and Specific Objections and pursuant to the Court's discovery orders in this case, Defendants will produce relevant, responsive, and non-privileged documents, to the extent they exist and can be found after a reasonable search and are in the possession, custody, or control of Defendants.

REQUEST NO. 48:

All documents referring or relating to any negotiations for a license under any BCD patent or patent application relating to the Accused Products.

RESPONSE TO REQUEST NO. 48:

In addition to their General Objections, Defendants object to this request as overly broad, unduly burdensome, irrelevant, vague, and ambiguous to the extent that it seeks "all documents referring or relating to." Defendants also object to this request to the extent it is duplicative.

Subject to the foregoing General and Specific Objections and pursuant to the Court's discovery orders in this case, Defendants will produce relevant, responsive, and non-privileged documents, to the extent they exist and can be found after a reasonable search and are in the possession, custody, or control of Defendants.

REQUEST NO. 49:

All Power Integrations products, marketing materials, brochures, product literature, application notes, package inserts, research and development materials, training materials, manuals, or other instructional documents or materials in your possession, custody, or control.

RESPONSE TO REQUEST NO. 49:

In addition to their General Objections, Defendants object to this request as overly broad, unduly burdensome, irrelevant, vague, and ambiguous with respect to at least the terms "all" and "other instructional documents or materials" as used in this request.

Subject to the foregoing General and Specific Objections and pursuant to the Court's discovery orders in this case, Defendants will produce relevant, responsive, and non-privileged documents, to the extent they exist and can be found after a reasonable search and are in the possession, custody, or control of Defendants.

REQUEST NO. 50:

All documents in BCD's possession that refer or relate to any Power Integrations product, including without limitation marketing materials, brochures, drawings, prototypes, notes, notebooks, workbooks, project reports, correspondence, memoranda, test results, and the source of and the manner in which you obtained the information.

RESPONSE TO REQUEST NO. 50:

In addition to their General Objections, Defendants object to this request as overly broad, unduly burdensome, irrelevant, vague, and ambiguous to the extent that it seeks "all documents . . . that refer or relate to." Defendants further object to this request as overly broad and unduly burdensome to the extent that the request seeks information that is already in the possession of Plaintiff, publicly available, or readily accessible to Plaintiff. Moreover, Defendants object to this request to the extent it is duplicative.

Subject to the foregoing General and Specific Objections and pursuant to the Court's discovery orders in this case, Defendants will produce relevant, responsive, and non-privileged documents, to the extent they exist and can be found after a reasonable search and are in the possession, custody, or control of Defendants.

REQUEST NO. 51:

All documents that refer or relate to the extent to which you have relied upon, referred to, or otherwise used each item or information identified in response to Request for Production No. 50 in the conduct of your business, including without limitation, in designing, manufacturing, testing, advertising, marketing, promoting, and/or selling the Accused Products, training others to use the Accused Products, and/or comparing the Accused Products to any product provided by Power Integrations.

RESPONSE TO REQUEST NO. 51:

In addition to their General Objections, Defendants object to this request as overly broad, unduly burdensome, irrelevant, vague, and ambiguous to the extent that it seeks "all documents that refer or relate to." Defendants also object to this request to the extent it is duplicative.

Subject to the foregoing General and Specific Objections and pursuant to the Court's discovery orders in this case, Defendants will produce relevant, responsive, and non-privileged documents, to the extent they exist and can be found after a reasonable search and are in the possession, custody, or control of Defendants.

REQUEST NO. 52:

All documents that refer or relate to any entities authorized or licensed to make, use, import into the United States, distribute, and/or sell the Accused Products, including without limitation all sales and distribution agreements, purchase orders, and invoices.

RESPONSE TO REQUEST NO. 52:

In addition to their General Objections, Defendants object to this request as overly broad, unduly burdensome, irrelevant, vague, and ambiguous to the extent that it seeks "all documents that refer or relate to." Defendants also object to this request to the extent it is duplicative.

Subject to the foregoing General and Specific Objections and pursuant to the Court's discovery orders in this case, Defendants will produce relevant, responsive, and non-privileged documents, to the extent they exist and can be found after a reasonable search and are in the possession, custody, or control of Defendants.

REQUEST NO. 53:

A complete set of schematics for each Accused Product, including without limitation schematics sufficient to disclose the structure of the circuits associated with the "frequency dither" and "V_{CC}/Feedback Control" features as those terms are used in BCD's literature.

RESPONSE TO REQUEST NO. 53:

In addition to their General Objections, Defendants object to this request as overly broad, unduly burdensome, irrelevant, vague, and ambiguous to the extent that it seeks "a complete set." Defendants also object to this request to the extent it is duplicative.

Subject to the foregoing General and Specific Objections and pursuant to the Court's discovery orders in this case, Defendants will produce relevant, responsive, and non-privileged documents, to the extent they exist and can be found after a reasonable search and are in the possession, custody, or control of Defendants.

REQUEST NO. 54:

All documents that refer or relate to communication with field sales personnel, whether employed by BCD or otherwise, related to any Accused Product, including without limitation communications reflecting customers for the Accused Products, identification of projects or products incorporating or using the Accused Products, expected volume of sales for the Accused Products, and pricing of the Accused Products.

RESPONSE TO REQUEST NO. 54:

In addition to their General Objections, Defendants object to this request as overly broad, unduly burdensome, irrelevant, vague, and ambiguous to the extent that it uses the terms "all documents that refer or relate to" and "expected volume of sales."

Subject to the foregoing General and Specific Objections and pursuant to the Court's discovery orders in this case, Defendants will produce relevant, responsive, and non-privileged documents, to the extent they exist and can be found after a reasonable search and are in the possession, custody, or control of Defendants.

REQUEST NO. 55:

All documents that refer or relate to reports from field sales agents, distributors, and representatives of field sales agents and distributors acting on behalf of BCD related to any Accused Product, including without limitation point of sale reports, including, but not limited to, specific sales numbers for each of the fifty United States, any reports identifying any third party end user for the Accused Products, third party end user applications for the Accused Products, and third party end user projects or products either currently using or planning to use the Accused Products.

RESPONSE TO REQUEST NO. 55:

In addition to their General Objections, Defendants object to this request as overly broad, unduly burdensome, irrelevant, vague, and ambiguous to the extent that it uses the terms "all documents that refer or relate to" and "third party end user." Defendants also object to this request to the extent it is duplicative.

Subject to the foregoing General and Specific Objections and pursuant to the Court's discovery orders in this case, Defendants will produce relevant, responsive, and non-privileged

documents, to the extent they exist and can be found after a reasonable search and are in the possession, custody, or control of Defendants.

REQUEST NO. 56:

All documents that refer or relate to any communications with a third party to whom BCD has provided application notes for the Accused Products, including without limitation the identity of the third parties and copies of the application note(s) that were provided to the third parties.

RESPONSE TO REQUEST NO. 56:

In addition to their General Objections, Defendants object to this request as overly broad, unduly burdensome, irrelevant, vague, and ambiguous to the extent that it seeks "all documents that refer or relate to."

Subject to the foregoing General and Specific Objections and pursuant to the Court's discovery orders in this case, Defendants will produce relevant, responsive, and non-privileged documents, to the extent they exist and can be found after a reasonable search and are in the possession, custody, or control of Defendants.

REQUEST NO. 57:

All documents that refer or relate to any communications with any third party to whom BCD has provided reference designs or demonstration boards for the Accused Products, including without limitation the identity of the third parties and the reference designs and/or demonstration boards that were provided to any third party for each of the Accused Products.

RESPONSE TO REQUEST NO. 57:

In addition to their General Objections, Defendants object to this request as overly broad, unduly burdensome, irrelevant, vague, and ambiguous to the extent that it seeks "all documents that refer or relate to." Defendants also object to this request to the extent it is duplicative.

Subject to the foregoing General and Specific Objections and pursuant to the Court's discovery orders in this case, Defendants will produce relevant, responsive, and non-privileged

documents, to the extent they exist and can be found after a reasonable search and are in the possession, custody, or control of Defendants.

REQUEST NO. 58:

All documents that refer or relate to receiving any request for samples of the Accused Products or providing samples of the Accused Products, including without limitation requests received through the internet.

RESPONSE TO REQUEST NO. 58:

In addition to their General Objections, Defendants object to this request as overly broad, unduly burdensome, irrelevant, vague, and ambiguous to the extent that it seeks "all documents that refer or relate to." Defendants also object to this request to the extent it is duplicative.

Subject to the foregoing General and Specific Objections and pursuant to the Court's discovery orders in this case, Defendants will produce relevant, responsive, and non-privileged documents, to the extent they exist and can be found after a reasonable search and are in the possession, custody, or control of Defendants.

REQUEST NO. 59:

Documents sufficient to show the quantity, in total and by month or quarter, of each of the Accused Products made or sold by BCD from 2006 to the present.

RESPONSE TO REQUEST NO. 59:

In addition to their General Objections, Defendants object to this request as overly broad, unduly burdensome, and irrelevant both in general and to the extent that it seeks information outside any relevant time period.

Subject to the foregoing General and Specific Objections and pursuant to the Court's discovery orders in this case, Defendants will produce relevant, responsive, and non-privileged documents, to the extent they exist and can be found after a reasonable search and are in the possession, custody, or control of Defendants.

REQUEST NO. 60:

All documents that refer or relate to any comparison between the pricing of the Accused Products and Power Integrations' products, including without limitation communications reflecting pricing information of Power Integrations' products received from any third party.

RESPONSE TO REQUEST NO. 60:

In addition to their General Objections, Defendants object to this request as overly broad, unduly burdensome, irrelevant, vague, and ambiguous to the extent that it seeks "all documents that refer or relate to."

Subject to the foregoing General and Specific Objections and pursuant to the Court's discovery orders in this case, Defendants will produce relevant, responsive, and non-privileged documents, to the extent they exist and can be found after a reasonable search and are in the possession, custody, or control of Defendants.

REQUEST NO. 61:

All documents sufficient to show the quantity, by state, and by method of sale or marketing, of all sales, shipping, or marketing of the Accused Products and downstream products in each of the fifty United States, including, but not limited to, purchases made over the internet.

RESPONSE TO REQUEST NO. 61:

In addition to their General Objections, Defendants object to this request as overly broad, unduly burdensome, irrelevant, vague, and ambiguous to the extent it refers to marketing quantities. Defendants also object to this request as overly broad, unduly burdensome, and irrelevant.

Subject to the foregoing General and Specific Objections and pursuant to the Court's discovery orders in this case, Defendants will produce relevant, responsive, and non-privileged documents, to the extent they exist and can be found after a reasonable search and are in the possession, custody, or control of Defendants.

REQUEST NO. 62:

All documents posted on BCD's publicly available website that refer or relate to any Accused Products and products containing same or the method and/or process of using any Accused Product and products containing same, including, but not limited to, the availability for purchase, shipping methods and costs of purchased products.

RESPONSE TO REQUEST NO. 62:

In addition to their General Objections, Defendants object to this request as overly broad, unduly burdensome, irrelevant, vague, and ambiguous to the extent it uses the terms "all documents . . . that relate to." Defendants also object to this request to the extent it is duplicative and the information is publicly available.

Subject to the foregoing General and Specific Objections and pursuant to the Court's discovery orders in this case, Defendants will produce relevant, responsive, and non-privileged documents, to the extent they exist and can be found after a reasonable search and are in the possession, custody, or control of Defendants.

REQUEST NO. 63:

All documents referring or relating to contracts entered into by BCD or any of its agents, customers or distributors, with any Delaware corporation.

RESPONSE TO REQUEST NO. 63:

In addition to their General Objections, Defendants object to this request as overly broad, unduly burdensome, irrelevant, vague, and ambiguous to the extent that it seeks "all documents referring or relating to."

Subject to the foregoing General and Specific Objections and pursuant to the Court's discovery orders in this case, Defendants will produce relevant, responsive, and non-privileged documents, to the extent they exist and can be found after a reasonable search and are in the possession, custody, or control of Defendants.

REQUEST NO. 64:

All documents referring or relating to any business dealings between BCD or any of its agents, customers or distributors, with any Delaware corporation.

RESPONSE TO REQUEST NO. 64:

In addition to their General Objections, Defendants object to this request as overly broad, unduly burdensome, irrelevant, vague, and ambiguous to the extent that it seeks "all documents referring or relating to." Defendants also object to this request to the extent it is duplicative.

Subject to the foregoing General and Specific Objections and pursuant to the Court's discovery orders in this case, Defendants will produce relevant, responsive, and non-privileged documents, to the extent they exist and can be found after a reasonable search and are in the possession, custody, or control of Defendants.

REQUEST NO. 65:

All contracts or agreements between BCD and any customers or distributors, regarding the use, distribution, or resale of any BCD product.

RESPONSE TO REQUEST NO. 65:

In addition to their General Objections, Defendants object to this request as overly broad, unduly burdensome, irrelevant, vague, and ambiguous to the extent it uses the terms "all contracts or agreements" and "any BCD product." Defendants also object to this request to the extent it is duplicative.

Subject to the foregoing General and Specific Objections and pursuant to the Court's discovery orders in this case, Defendants will produce relevant, responsive, and non-privileged documents, to the extent they exist and can be found after a reasonable search and are in the possession, custody, or control of Defendants.

REQUEST NO. 66:

Documents sufficient to identify each sales agent or distributor who sells or distributes any Accused Product and the geographic area or region for which each such distributor or sales agent is responsible.

RESPONSE TO REQUEST NO. 66:

Subject to the foregoing General Objections and pursuant to the Court's discovery orders in this case, Defendants will produce relevant, responsive, and non-privileged documents, to the extent they exist and can be found after a reasonable search and are in the possession, custody, or control of Defendants.

REQUEST NO. 67:

All documents referring or relating to the distribution or sale of cell phone chargers and cell phones, including documents referring or relating to the established distribution channels for the distribution of cell phone chargers into and within the United States, the identity of suppliers of chargers to cell phone manufacturers, the identity of manufacturers of cell phones distributed in the United States, the identity of distributors of chargers and cell phones in the United States and the identity of retailers of chargers and cell phones in the United States.

RESPONSE TO REQUEST NO. 67:

In addition to their General Objections, Defendants object to this request as overly broad, unduly burdensome, irrelevant, vague, and ambiguous to the extent that it uses the terms "all documents referring or relating to" and "established distribution channels." Defendants further object to this request as overly broad and unduly burdensome to the extent that the request seeks information that is already in the possession of Plaintiff, publicly available, or readily accessible to Plaintiff. Defendants also object to this request to the extent it is duplicative.

Subject to the foregoing General and Specific Objections and pursuant to the Court's discovery orders in this case, Defendants will produce relevant, responsive, and non-privileged documents, to the extent they exist and can be found after a reasonable search and are in the possession, custody, or control of Defendants.

REQUEST NO. 68:

Documents sufficient to show all inquiries made to BCD though its web site(s) from locations within the United States, including the address from which each such inquiry came, the nature of the inquiry, and BCD's response.

RESPONSE TO REQUEST NO. 68:

In addition to their General Objections, Defendants object to this request as overly broad, unduly burdensome, and irrelevant to the extent that it seeks information outside any relevant time period. In addition to their General Objections, Defendants object to this request as overly broad, unduly burdensome, irrelevant, vague, and ambiguous with respect to at least the terms "all inquiries" and "inquiry" as used in this request.

Subject to the foregoing General and Specific Objections and pursuant to the Court's discovery orders in this case, Defendants will produce relevant, responsive, and non-privileged documents, to the extent they exist and can be found after a reasonable search and are in the possession, custody, or control of Defendants.

Dated: February 27, 2008

Respectfully submitted,

FINNEGAN, HENDERSON, FARABOW, GARRETT & DUNNER, L.L.P.

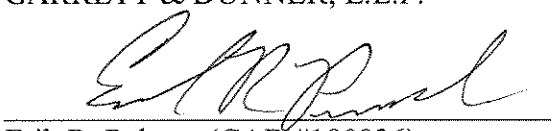

Erik R. Puknys (CAB #190926)
FINNEGAN, HENDERSON, FARABOW, GARRETT & DUNNER, L.L.P.
3300 Hillview Avenue
Palo Alto, CA 94304
(650) 849-6600
erik.puknys@finnegan.com

E. Robert Yoches
FINNEGAN, HENDERSON, FARABOW, GARRETT & DUNNER, L.L.P.
901 New York Avenue, NW
Washington, DC 20001
(202) 408-4000
bob.yoches@finnegan.com

Robert L. Burns
FINNEGAN, HENDERSON, FARABOW, GARRETT & DUNNER, L.L.P.
11955 Freedom Drive
Reston, VA 20190
(571) 203-2700
robert.burns@finnegan.com

Attorneys for Defendants
BCD SEMICONDUCTOR CORPORATION and SHANGHAI SIM-BCD SEMICONDUCTOR MANUFACTURING, CO., LTD.

Of Counsel:

Steven Balick (I.D. #2114)
John G. Day (I.D. #2403)
Tiffany Geyer Lydon (I.D. #3950)
ASHBY & GEDDES
500 Delaware Avenue, 8th Floor
P.O. Box 1150
Wilmington, Delaware 19899
(302) 654-1888
sbalick@ashby-geddes.com
jday@ashby-geddes.com
tlydon@ashby-geddes.com

CERTIFICATE OF SERVICE

I hereby certify that on this 27th day of February, 2008, a true and correct copy of Defendants' Responses and Objections to Plaintiff's First Set of Requests For Production of Documents and Things (Nos. 1-68) was served upon the below-named counsel of record at the address and in the manner indicated:

William J. Marsden, Jr., Esquire — VIA FEDEX AND ELECTRONIC MAIL
Fish & Richardson, P.C.
919 N. Market Street
Suite 1100
P.O. Box 1114
Wilmington, DE 19899

Frank E. Scherkenbach, Esquire — VIA ELECTRONIC MAIL
Fish & Richardson, P.C.
225 Franklin Street
Boston, MA 02110-2804

Howard G. Pollack, Esquire — VIA ELECTRONIC MAIL
Fish & Richardson, P.C.
500 Arguello Street, Suite 500
Redwood City, CA 94063



Erik R. Puknys

Exhibit C

FISH & RICHARDSON P.C.

500 Arguello Street
Suite 500
Redwood City, California
94063-1526

Telephone
650 839-5070

Facsimile
650 839-5071

Web Site
www.fr.com

Michael R. Headley
650 839-5139

Email
headley@fr.com

Frederick P. Fish
1855-1930

W.K. Richardson
1859-1951

VIA FACSIMILE & U.S. MAIL

March 5, 2008

Erik R. Puknys
Finnegan, Henderson, Farabow, Garrett & Dunner LLP (Palo Alto)
Stanford Research Park
3300 Hillview Avenue
Palo Alto, CA 94304-1203

Re: Power Integrations, Inc. v. BCD Semiconductor Corporation
USDC-D. Del. - C.A. No. 07-633 JJF-LPS

ATLANTA
AUSTIN
BOSTON
DALLAS
DELAWARE
MUNICH
NEW YORK
SAN DIEGO
SILICON VALLEY
TWIN CITIES
WASHINGTON, DC

Dear Erik:

I am writing to address BCD's inadequate responses to Power Integrations' First Set of Interrogatories, First Set of Requests for Admissions, and First Set of Requests for Production, including BCD's failure to produce a single document since agreeing to do so in response to our requests. We request that you supplement your responses and begin production immediately to permit Power Integrations to move forward with any follow-up discovery and prepare its reply brief for the pending motion for preliminary injunction. A brief description of the most glaring of BCD's deficiencies follows:

Interrogatory No. 2

Interrogatory No. 2 seeks BCD's invalidity contentions for the patents-in-suit. BCD's response states that its investigation is ongoing but does not identify or provide a single prior art reference on which BCD intends to rely. Nevertheless, BCD filed suit seeking a declaratory judgment that the patents-in-suit are invalid, stating in its F-1 filing with the SEC that BCD believes the patents are invalid. In view of these actions and the fact that responsive briefs regarding Power Integrations' motion for preliminary injunction are due in just a few weeks, there is no basis for BCD to delay providing discovery regarding the present state of its invalidity contentions, in particular any invalidity contention(s) related to the claim at issue in the preliminary injunction, claim 1 of the '876 patent.

Interrogatories Nos. 3-4

Interrogatories Nos. 3-4 seek BCD's non-infringement contentions and a description of any consideration, plan, or attempt BCD has made to alter any BCD PWM controllers to avoid infringement of the patents-in-suit. BCD has refused to provide any detailed response, yet BCD flatly denies infringement, stating "its products do not

infringe Power Integrations' asserted patents." BCD has also filed suit seeking a declaratory judgment of non-infringement with respect to the patents-in-suit. Because BCD has affirmatively and unequivocally stated its belief that it does not infringe any of the patents-in-suit in its declaratory judgment complaint and in response to Interrogatory No. 4, BCD is certainly in a position to respond with the basis for this belief in response to Interrogatory No. 3, in particular with respect to the claim at issue in the pending motion for preliminary injunction.

Interrogatory No. 5

BCD provided no substantive response to Interrogatory No. 5, which seeks the date(s) and circumstances surrounding BCD's knowledge of the patents-in-suit. As Power Integrations' suit against BCD was initially filed in June 2007, it seems highly unlikely that you have yet to determine when and how BCD learned of the patents-in-suit, and we ask that you supplement with a substantive response immediately.

Interrogatory No. 11

BCD provided no substantive response to Interrogatory No. 11, which seeks a description of any communications BCD has had with third parties regarding this case, Power Integrations' patents, or Power Integrations products. BCD has no basis for refusing to respond to these requests, in particular in view of the public statement BCD made about such communications in its F-1 filing with the SEC. BCD's F-1 notes at page 17 that "As a result of the Power Integrations lawsuit, some of our existing distributors and end-customers, as well as some new distributors and end-customers, have asked us to indemnify them for potential costs and damages associated with intellectual property infringement." Given the inconsistency between BCD's response and what BCD has been telling the U.S. government and potential investors, we ask that you supplement this response and produce copies of any such written communications from distributors and/or end-customers immediately.

Interrogatories Nos. 6, 8-9, 13, and 15

BCD responded to Interrogatories Nos. 6, 8-9, 13, and 15 with the statement that it will produce copies of documents and/or things from which further responsive information may be derived or ascertained pursuant to FRCP 33(d), but BCD has not provided any responsive information or produced any such documents or things to date. Power Integrations requests that BCD either supplement these responses to provide substantive answers, or produce the promised documents cross-referenced to interrogatory response immediately. We expect substantially all document production by BCD to be completed no later than March 14.

Interrogatory No. 7

Interrogatory No. 7 seeks the identity of the persons, companies, and entities involved in the conception, design, development, and testing of the Accused BCD Products, and a detailed description of these development activities. In its response, BCD identified a single person – David Chen – as "knowledgeable about the design of the AP3700." BCD's response is incomplete and inadequate, as it fails to address the range of information sought in this interrogatory, and it also ignores BCD's other PWM controller products, including the AP3710, AP3706, and any other substantially identical controller chip.

Interrogatory No. 10

Interrogatory No. 10 seeks the identity of BCD's customers and prospective customers who have been provided with the Accused Products or otherwise demonstrated, sampled, or offered the Accused Products. In its response, BCD only replied with respect to the AP3700, and it only identified three companies as having purchased AP3700s. This response is plainly deficient, and Power Integrations requests that BCD supplement its response immediately.

Interrogatory No. 12

BCD provided no substantive response with respect to any comparison between Power Integrations products and the Accused Products as called for in Interrogatory No. 12, instead stating that "its investigation into any comparisons continues."

RFA Nos. 1, 3-7

RFA Nos. 1 and 3-7 seek admissions that BCD conducts business with a number of entities that are specifically identified as using BCD's products in BCD's promotional materials and F-1, yet BCD denied these requests, objecting in part on the basis of some dispute with the use of the term "conducts business." Please explain the basis of your confusion with respect to this straight-forward terminology.

Requests for Production

BCD agreed to produce a range of documents and things in response to Power Integrations' RFPs, but we have not received any production since that time, nor any commitment as to a date certain for production to begin. Moreover, BCD has unnecessarily limited the scope of its responses to the AP3700, *see* General Objection No. 24 and Response to RFP No. 10, even though the requests are more broadly addressed to BCD's PWM controllers, and BCD is currently also marketing at least the AP3710 and AP3706. I have now asked for the schematics for the AP3710 and

AP3706 on several occasions, and we reiterate that request and our request for all information regarding these products called for in our RFPs.

BCD's responses to RFP Nos. 16-17, which seek information regarding any Accused Products or downstream products imported into the United States, are also deficient. BCD claims that "Defendants have no responsive documents," but given BCD's public statements about its close relationships with customers and the inquiries from distributors and end-users regarding infringement of Power Integrations' patents, it is difficult to believe that BCD has no documents concerning the ultimate importation of the AP3700, AP3710, or AP3706 into the United States. Moreover, PI is aware of at least one instance in which BCD directly imported samples of the AP3700 into the United States, yet BCD's discovery responses make no mention of it, suggesting that BCD has not fully investigated its response.

In view of Power Integrations' pending motion for preliminary injunction, we ask that you supplement your responses to these requests, as discussed in more detail above, no later than Friday, March 14. Additionally, where BCD has indicated it will produce documents, Power Integrations requests that document production begin no later than Monday, March 10 and be substantially completed by Friday, March 14. We need these documents and responses sufficiently in advance of the deadline to file our reply brief with respect to the pending motion for preliminary injunction, and if BCD does not begin producing documents by March 10 or to supplement its responses by March 14, Power Integrations will have no choice but to bring this matter to Magistrate Judge Stark's attention.

I look forward to your response.

Sincerely,

Michael R. Headley

50468639.doc

****
*** TX REPORT ***
****

TRANSMISSION OK

TX/RX NO	3491
CONNECTION TEL	#10256#001553531#8496666
CONNECTION ID	
ST. TIME	03/05 10:18
USAGE T	04'09
PGS. SENT	5
RESULT	OK

FISH & RICHARDSON P.C.

500 Arguello Street
Suite 500
Redwood City, California
94063-1526

Telephone
650 839-5070

Facsimile
650 839-5071

Web Site
www.fr.com

Date March 5, 2008

To Erik R. Puknys
Finnegan, Henderson, Farabow,
Garrett & Dunner L.L.P.
Stanford Research Park
3300 Hillview Avenue
Palo Alto, CA 94304-1203
Telephone: (650) 849-6600

Facsimile number 10256-01553531 / (650) 849-6666

From Michael R. Headley

Re Power Integrations, Inc. v. BCD Semiconductor Corporation

Number of pages including this page 5

Message Please see attached.

Exhibit D

Sharon Bradley

From: Michael Headley
Sent: Tuesday, March 11, 2008 6:43 PM
To: 'Puknys, Erik'
Cc: 'Yoches, Bob'; 'Burns, Robert'; Howard Pollack
Subject: RE: PI/BCD: BCD supplemental discovery responses and production

Erik,

Thank you for your call today regarding the status of BCD's discovery responses and production; I look forward to receiving your supplemental responses this Friday. Because it sounds as though you presently have people working with your client to collect documents, I wanted to follow up to confirm our discussion regarding the types of documents we expect to receive in the near term for purposes of addressing the pending motions. Per our call, we believe that BCD's communications with Samsung and its cell phone charger subcontractors (including DongYang, RF Tech., H&T, HAEM, Dongwon, Dreamtech, Unitron, and Foxlink), sales records/point of sale information, distributor agreements and communications with distributors (including Future Electronics, Segyung BriteStone, ICT, and Tong Baek Trading Co.), and the schematics for the Accused Parts (AP3700 and variants, AP3710, and any other controllers with substantially identical frequency jitter functionality) are all highly relevant, responsive, and bear on the pending motions. This list is not exhaustive, but I hope it helps to expedite your production, as we still have not received any documents following the responses served last month.

I appreciate your attention to this matter.

Sincerely,
Michael

Michael R. Headley
Fish & Richardson P.C.
500 Arguello St., Suite 500
Redwood City, CA 94063-1526
(650) 839-5139 (direct)
(650) 839-5071 (fax)
****

This email message is for the sole use of the intended recipient(s) and may contain confidential and privileged information. Any unauthorized use or disclosure is prohibited. If you are not the intended recipient, please contact the sender by reply email and destroy all copies of the original message.

IRS CIRCULAR 230 DISCLOSURE: Any U.S. tax advice contained in this communication (including any attachments) is not intended or written to be used, and cannot be used, for the purpose of (i) avoiding penalties under the Internal Revenue Code or (ii) promoting, marketing or recommending to another party any transaction or matter addressed herein.

****

Exhibit E

FISH & RICHARDSON P.C.

500 Arguello Street
Suite 500
Redwood City, California
94063-1526

Telephone
650 839-5070

Facsimile
650 839-5071

Web Site
www.fr.com

Michael R. Headley
650 839-5139

Email
headley@fr.com

Frederick P. Fish
1855-1930

W.K. Richardson
1859-1951

VIA FACSIMILE & U.S. MAIL

March 18, 2008

Erik R. Puknys
Finnegan, Henderson, Farabow, Garrett & Dunner LLP (Palo Alto)
Stanford Research Park
3300 Hillview Avenue
Palo Alto, CA 94304-1203

Re: *Power Integrations, Inc. v. BCD Semiconductor Corp.*
USDC-D. Del. – Civil Action No. 07-633 JJF-LPS

ATLANTA
AUSTIN
BOSTON
DALLAS
DELAWARE
MUNICH
NEW YORK
SAN DIEGO
SILICON VALLEY
TWIN CITIES
WASHINGTON, DC

Dear Erik:

I am writing in response to your voicemail and letter of Friday regarding the status of BCD's discovery responses, particularly since BCD reneged on its promise to provide supplemental, substantive discovery responses this past Friday. Your suggestion that BCD can withhold its contentions until the September 30 cutoff date for written discovery ignores BCD's duty to respond to discovery now, irrespective of whether BCD later supplements its responses as further information becomes available. The Court has not stayed discovery, BCD filed its own declaratory judgment complaint against Power Integrations in January, and this case has been pending for months – there is no reason for BCD to withhold information regarding its present contentions or its business. Moreover, much of the discovery we sought bears directly on your pending jurisdictional challenge, and without substantive discovery responses, we cannot adequately respond to the Court's order requesting supplemental briefing on jurisdictional issues.

Your letter states that you responded to the bulk of Power Integrations' interrogatories pursuant to Rule 33(d), but we still have not received an identification of which documents you rely on for the various responses, nor have we received any document production since you agreed to produce documents last month. You have also refused to provide schematics other than the poor copy of the AP3700 schematics we initially received, despite numerous requests. This refusal has significantly hampered our ability to address BCD's various PWM controller products in the context of our motion for preliminary injunction, and we cannot eliminate any of the parts from this family (which includes at least the AP3700A, AP3700E, AP3710, AP3706, and AP3708) without reviewing clean copies of their schematics.

Your letter also demands that Power Integrations produce information concerning BCD's importation of sample AP3700 chips into the United States, and we will

respond to your written discovery on that issue in due course, but you need to conduct your own investigation into this matter. BCD's current discovery responses suggest you have not done so.

In short, we maintain our demand that BCD provide supplemental, substantive discovery responses and begin its document production immediately, the most pressing of which being the discovery related to Power Integrations' pending motion for preliminary injunction and the jurisdictional issues. At a minimum, we need BCD to produce schematics for its PWM controller products and to supplement its discovery responses immediately with its present non-infringement or invalidity contentions regarding claim 1 of the '876 patent, the claim at issue in the pending motion for preliminary injunction, including the basis for your declaratory judgment complaint asserting invalidity and non-infringement. Because it appears as though we have reached an impasse regarding BCD's contention interrogatory responses, we will be raising this issue with Magistrate Judge Stark shortly. If you will supplement your responses to address claim 1 of the '876 patent and produce the relevant schematics this week, though, please let us know so that we can spare the Court the trouble.

I will address the other matters raised in your lengthy letter separately, but I look forward to your response.

Sincerely,

Michael R. Headley

50471698.doc

****
*** TX REPORT ***
****

TRANSMISSION OK

TX/RX NO	3134
CONNECTION TEL	89#10256#0001001#8496666
CONNECTION ID	
ST. TIME	03/18 16:04
USAGE T	00'55
PGS. SENT	3
RESULT	OK

FISH & RICHARDSON P.C.

500 Arguello Street
Suite 500
Redwood City, California
94063-1526

Telephone
650 839-5070

Facsimile
650 839-5071

Web Site
www.fr.com

Date March 18, 2008

To Erik R. Puknys
Finnegan, Henderson, Farabow,
Garrett & Dunner L.L.P.
Stanford Research Park
3300 Hillview Avenue
Palo Alto, CA 94304-1203
Telephone: (650) 849-6600

Facsimile number 10256-01553531 / (650) 849-6666

From Michael R. Headley

Re Power Integrations, Inc. v. BCD Semiconductor Corporation

Number of pages including this page 3

Message Please see attached.

Exhibit F

FINNEGAN HENDERSON FARABOW GARRETT & DUNNER LLP

Stanford Research Park ▪ 3300 Hillview Avenue ▪ Palo Alto, CA 94304-1203 ▪ 650.849.6600 ▪ Fax 650.849.6666
www.finnegan.com

ERIK R. PUKNYS
650.849.6644
erik.puknys@finnegan.com

March 14, 2008

Michael Headley, Esq.
Fish and Richardson P.C.
500 Arguello Street, Suite 500
Redwood City, CA 94063-1526

Power Integrations, Inc., v. BCD Semiconductor Manufacturing Corp. et al.
Case No. 07-cv-03137 WHA

Dear Michael:

I write regarding a number of letters we received from you regarding discovery issues.

As I have told you previously, BCD is not yet in a position to produce additional documents. Also, contrary to what I told you earlier this week, BCD is not yet able to supplement its interrogatory answers. BCD is moving with deliberate and reasonable speed in investigating PI's discovery requests and responding to them, and we currently believe that BCD can supplement its discovery responses and produce documents by April 1, 2008.

As to several specific issues you raised, we respond as follows.

Interrogatories

You request that we provide our contention responses for Interrogatories Nos. 2-4. The Court's Schedule specifies that these are due by September 30, 2008. To the extent we complete our investigation and preparation of these contentions in advance of this date, we will provide them earlier. We note that PI has not yet even identified which claims it is asserting, much less provided an infringement analysis of them. Indeed, it appears from your recent filing of the Amended Complaint that you may still be in the process of formulating your own infringement and validity theories. Accordingly, your request for our contentions regarding claims not yet even identified is both premature and unreasonable.

Your requests directed to other interrogatories (Nos. 5-13 and 15) involve either responses we have responded to pursuant to Rule Fed. R. Civ. P. 33(d) or are still investigating.

As explained above, we anticipate producing documents and supplementing our responses the first of April.

Requests for Admission

As to Requests Nos. 1, 3-7, you request that we explain our objection to the phrase "conducts business." It is not defined and is especially ambiguous given that BCD utilizes several distributors to resell BCD products to non-party manufacturers, as disclosed in the various declarations filed with BCD's motion to dismiss and related papers.

Requests for Production

PI is requesting BCD to produce documents relating to the AP3710 and AP3706. We are reviewing these products in further detail, including how and where they are distributed, if at all. Before we unnecessarily expend more time, energy and money, please let us know if PI is still pursuing these products given that PI has just amended its complaint to withdraw one of its patents.

You also state in one of your letters that PI is aware of one instance in which BCD shipped samples of the AP3700 into the United States. Please explain what information PI has on this issue.

Depositions of BCD's Technical Expert

We are requesting dates from our technical expert and will provide them to you in the near future.

PI's Document Production

As I discussed with you earlier this week, we are encountering problems with the CDs your law firm produced in this case. A review of the documents produced revealed that relevant documents were either missing or incomplete. For example, only pages 1, 5, 15, 16 and 19 of PI's supplemental responses to Fairchild's first set of interrogatories were produced. Other interrogatories were not produced at all, such as PI's original responses to Fairchild's first set of interrogatories. Similarly, it appears that the inventor depositions related to the '876 patent were not produced. In short, many of the documents provided are incomplete, and no explanation has been provided regarding whether (1) these documents are as complete as those found in the files from which they were produced and/or (2) these documents have been redacted. Accordingly, BCD requests that PI provide all documents related to the Fairchild litigation and the '876 patent in full, including, but not limited to, interrogatories and the responses to the interrogatories, admissions and responses to the admissions, and depositions and the exhibits entered in those depositions.

We note that the problems we are encountering are substantially hampering our ability to go forward with the scheduled depositions. Here is a list of what we additionally require.

1) Bates numbers should be processed in a uniform, zero-filled format. The PIF and KE production sequences previously sent will need to be corrected to reflect the uniform, zero-filled format and replaced;

2) All documents need to be provided in a single-image TIFF format. As to the disks/documents received to date, CD011, CD039, CD062EV, CD074, 'L Images,' 'LEG 365' and 'PI Bailey Electronic Version' need to be corrected to reflect single-image TIFFs as well as production numbering conventions and replaced; CD066 is missing images, please correct and replace that CD; and

3) Of critical note, all documents produced in electronic format should be accompanied with LFP (load) and .dat files associated with the material on the disk and formatted for single-image TIFFs. Without this information it is extremely difficult, if not impossible, to access the produced CDs. Also, CD054's load file structure is incorrect, and we require a corrected, replacement CD.

In addition to the above corrections, we also would like to receive the following:

In the Fairchild case:

1) All discovery requests or responses relating to either party, provide complete copies of all interrogatories, request for production and request for admissions and the corresponding responses. To the extent that Power Integrations served a Notice of Inspection, we are requesting copies of all such notices and any samples or other materials offered at such inspection;

2) Copies of transcripts (in electronic format) of any deposition taken by either party in this matter;

3) Copies of the all production sequences in the Fairchild case, including, but not limited to any documents with the prefix "FCS" and "BB";

4) Confirmation of all production sequences exchanged by the parties in this case, including the range of documents produced, and copies of any privilege logs for documents obtained and not produced under any asserted privilege;

5) Copies of any production sequences identified in #4 above which were not previously produced in their entirety;

6) All datasheets produced by either party, including, but not limited to those relied upon in the formation of any expert report or opinion by any person acting as an expert for either party, including but not limited to Robert Blauschild; and

7) All documents relied upon in the formation of Blauschild's expert report(s) which are not identified with a bates numbering convention, but are identified on Exhibit B "Index of Documents reviewed by Bob Blauschild."

In the Motorola case:

Please provide the following:

1) Copies of transcripts (in electronic format) of any deposition taken by either party in this matter;

2) Complete copies of all trial transcripts;

3) All discovery requests or responses relating to either party, please provide complete copies of all interrogatories, request for production and request for admissions and the corresponding responses

4) Identify all production sequences from the Motorola case, not produced in the Fairchild case;

5) Please provide copies of all sequences identified in Motorola #4 not previously produced in their entirety; and

6) Confirmation of all production sequences exchanged by the parties in this case, including the ranges of documents produced, and copies of any privilege logs for documents obtained and not produced under any asserted privilege by either party.

Sincerely,



Erik R. Puknys

ERP/nos

Exhibit G

IN THE UNITED STATES DISTRICT COURT
FOR THE DISTRICT OF DELAWARE

POWER INTEGRATIONS, INC., a Delaware corporation, Plaintiff, v. BCD SEMICONDUCTOR CORPORATION, a California corporation, SHANGHAI SIM-BCD SEMICONDUCTOR MANUFACTURING, CO., LTD, a China corporation, Defendants.	Case No. 07-cv-00633

PLAINTIFF POWER INTEGRATIONS, INC.'S FIRST SET OF REQUESTS FOR PRODUCTION OF DOCUMENTS AND THINGS TO BCD SEMICONDUCTOR CORPORATION and SHANGHAI SIM-BCD SEMICONDUCTOR MANUFACTURING, CO., LTD (NOS. 1 - 68)

Pursuant to Fed. R. Civ. P. 34, Plaintiff Power Integrations, Inc. ("Power Integrations") hereby requests Defendants BCD Semiconductor Corporation and Shanghai SIM-BCD Semiconductor Manufacturing, Co., Ltd., (collectively, "BCD") to produce, permit inspection and copying (with convenient access to duplicating equipment), or otherwise cause to be reproduced, each of the following documents and things within the possession, custody or control of BCD, designated and organized by the paragraphs and subparagraphs hereof to which they correspond, within the time prescribed by the Federal Rules of Civil Procedure and the local rules at the offices of FISH & RICHARDSON P.C., 500 Arguello Street, Suite 500, Redwood City, California 94063.

DEFINITIONS

1. "Power Integrations" means Power Integrations, Inc., including without limitation all of its corporate locations, and all predecessors, subsidiaries, parents, and affiliates, and all past or present directors, officers, agents, representatives, employees, consultants, attorneys, entities acting in joint-venture or partnership relationships with Power Integrations, Inc. and others acting on behalf of Power Integrations, Inc.

2. "BCD", "you", or "your" means BCD Semiconductor Corporation and Shanghai SIM-BCD Semiconductor Manufacturing Co., LTD, including without limitation all of their corporate locations, predecessors, affiliates, successors, subsidiaries, divisions or parts thereof, all past or present directors, officers, agents, representatives, employees, consultants, attorneys, entities acting in joint-venture or partnership relationships with BCD Semiconductor Corporation and/or Shanghai SIM-BCD Semiconductor Manufacturing Co., LTD, and others acting on behalf of BCD Semiconductor Corporation and/or Shanghai SIM-BCD Semiconductor Manufacturing Co., LTD.

3. "Document" is defined broadly to be given the full scope of that term contemplated in Federal Rule of Civil Procedure 34, and includes all tangible things, all originals (or, if originals are not available, identical copies thereof), all non-identical copies of a document, all drafts of final documents, all other written, printed, or recorded matter of any kind, and all other data compilations from which information can be obtained and translated if necessary, that are or have been in your actual or constructive possession or control, regardless of the medium on which they are produced, reproduced, or stored (including without limitation computer programs and files containing any

requested information), and any recording or writing, as these terms are defined in Rule 1001, Federal Rules of Evidence. Any document bearing marks, including without limitation, initials, stamped initials, comments, or notations not a part of the original text or photographic reproduction thereof, is a separate document.

4. "Person" or "Entity" means any individual or firm, association, joint venture, trust, partnership, corporation, or other collective organization.

5. The phrase "patents-in-suit" refers to any of U.S. Patent Nos. 6,249,876; 6,107,851; or 5,313,381.

6. "Infringe" and "infringement" refer to direct infringement, contributory infringement, inducement, literal infringement, and/or infringement by the doctrine of equivalents.

7. "Product" means a machine, manufacture, apparatus, device, instrument, mechanism, appliance, or assemblage of components/parts (either individually or collectively), which are designed to function together electrically, mechanically, chemically, or otherwise, to achieve a particular function or purpose, including those offered for sale, sold, or under development.

8. "Accused Product(s)" means and includes all integrated circuit products described by BCD as "pulse width modulation" or "PWM" controllers, whether manufactured or sold by BCD or others, that include any of what BCD refers to as a "Frequency Dither", "Frequency Dithering" or "V_{CC}/Feedback Control" feature, including but not limited to part numbers AP3700, AP3700A, AP3700E, and AP3710, and any substantially identical controller chip under any other part number designation.

9. "Products containing same" or "downstream product(s)" means and includes all products or kits that contain any Accused Product.

10. The term "reference design" means a design, drawing, pattern, blueprint, diagram, outline, sketch, or project scheme which may be visually and/or orally presented in order to exemplify, illustrate, or explain the use of an Accused Product in a power conversion application.

11. The term "demonstration boards" includes a prototype power converter used to exemplify, illustrate, or explain the use of an Accused Product in a power conversion application.

12. The terms "use" and "using" include without limitation use in a power supply, use in testing, use in demonstrating, and use in training.

13. "Any" and "all" shall be construed to mean both any and all.

INSTRUCTIONS

A. The singular form of a word should be interpreted in the plural as well. Any pronoun shall be construed to refer to the masculine, feminine, or neuter gender as in each case is most appropriate. The words "and" and "or" shall be construed conjunctively or disjunctively, whichever makes the request most inclusive.

B. These requests shall apply to all documents in your possession, custody or control at the present time or coming into your possession, custody or control prior to the date of the production. If you know of the existence, past or present, of any documents or things requested below, but are unable to produce such documents or things because they are not presently in your possession, custody, or control, you shall so state and shall identify such documents or things, and the person who has possession, custody or control of the documents or things.

C. If no documents are responsive to a particular request, you are to state that no responsive documents exist.

D. For any responsive documents or tangible things that have been lost, destroyed or withheld from production based on any ground other than privilege, you shall provide a written statement setting forth:

(1) the identity of the document;

(2) the nature of the document (e.g., letter, memorandum, chart);

(3) the identity of the person(s) who received copies of the document;

(4) the date of the document;

(5) a brief description of the subject matter of the document; and

(6) the circumstances of the loss or destruction of the document and any fact, statute, rule or decision upon which you rely in withholding the document.

E. If you decline to produce any document or part thereof based on a claim of privilege or work product, describe the nature and basis of your claim and the information withheld in a manner sufficient:

(1) to disclose the facts upon which you rely in asserting your claim;

(2) to permit the grounds and reasons for withholding the information to be identified unambiguously; and

(3) to permit the information withheld to be identified unambiguously.

F. All documents requested are to be produced in the same file or other organizational environment in which they are maintained. For example, a document that is part of a file, docket, or other grouping, should be physically produced together with all other documents from said file, docket or grouping, in the same order or manner of arrangement as the original. Alternatively, as to each document and thing produced in response hereto, you shall identify the request for production and where applicable, the interrogatory number, in response to which the document or thing is being produced. Where a document or thing exists in hard copy and electronic format, you shall produce both the hard and the electronic copy. Where a document exists only in electronic format, you shall produce it electronically, as it is kept in the ordinary course of business, including the file or other grouping in which it is electronically stored.

G. These requests seek all responsive documents in their original language and, if such original language is not English, these requests also seek all English-language translations that may exist for any such documents.

H. You shall keep and produce a record of the source of each document produced. This shall include the name and location of the file where each document was located and the name of the person, group or department having possession, custody or control of each document.

I. Each document is to be produced along with all drafts, without abbreviation or redaction.

J. A party is under a duty to seasonably amend a prior response to a request for production. *See* Fed. R. Civ. P. 26(e).

DOCUMENT REQUESTS

REQUEST NO. 1

All documents for which identification is requested in Power Integrations' First Set of Interrogatories to BCD, served concurrently herewith, or relied on in the preparation of BCD's responses to those interrogatories.

REQUEST NO. 2

All documents sufficient to determine the organizational structure of BCD, including parent, subsidiary, or other affiliated corporations.

REQUEST NO. 3

All documents that refer or relate to the research, development, and testing of the Accused Products, including but not limited to drawings, prototypes, notes, notebooks, workbooks, project reports, correspondence, memoranda, and test results.

REQUEST NO. 4

All documents that refer or relate to the design of the Accused Products, including but not limited to specifications, data sheets, drawings, diagrams, schematics, manuals, notes, notebooks, workbooks, correspondence, and memoranda.

REQUEST NO. 5

Documents sufficient to show the detailed internal structure, function, or operation of the Accused Products, including but not limited to drawings, schematics, data sheets, block diagrams, and operating instructions.

REQUEST NO. 6

All documents that refer or relate to the research, development, and testing of any downstream product incorporating any Accused Product, including but not limited to notes, notebooks, workbooks, correspondence, memoranda, and test results.

REQUEST NO. 7

All documents that refer or relate to the use of any Accused Product, including but not limited to instructions for use, specifications, data sheets, reference designs, drawings, schematics, diagrams, manuals, notes, notebooks, workbooks, correspondence, memoranda, and demonstration boards.

REQUEST NO. 8

All documents that refer or relate to the manufacture, fabrication, and production of the Accused Products, from 2006 to the present, including but not limited to the location of all manufacturing, fabrication, and production facilities and the quantity of each Accused Product manufactured, fabricated, or produced at each such facility.

REQUEST NO. 9

All documents that refer or relate to advertising and marketing of the Accused Products from 2006 to the present, including but not limited to promotional materials, press releases, trade journal articles, advertisements, catalogs, documents prepared for trade shows and meetings, package inserts, technical data sheets, specifications, price lists, sales presentations, and sales and marketing forecasts and projections.

REQUEST NO. 10

All documents that refer or relate to sale of the Accused Products, from 2006 to the present, including but not limited to documents sufficient to show BCD's actual and

expected gross revenues, net profits, gross revenues, sales, sales prices, and returns of the Accused Products.

REQUEST NO. 11

All documents that have been or are included with the sale or distribution of the Accused Products or products containing same, including without limitation instruction manuals, instructions for use, data sheets, and/or specifications.

REQUEST NO. 12

All documents referring or relating to the distribution network maintained by BCD for purposes of selling, distributing, or licensing the Accused Products and products containing same.

REQUEST NO. 13

All documents that refer or relate to the importation into the United States of the Accused Products and any product incorporating an Accused Product, from 2006 to the present, including but not limited to the quantity of Accused Products (specifically identified by product) imported into the United States, and the dates of such importation.

REQUEST NO. 14

All documents that refer or relate to any downstream product(s) into which any Accused Product is or has been incorporated, from 1998 to the present.

REQUEST NO. 15

Documents sufficient to show the structure, operation, and function of any downstream product(s) into which any Accused Product is or has been incorporated, including but not limited to drawings and schematics.

REQUEST NO. 16

Documents sufficient to identify each and every Accused Product that has been imported into the United States, sold for importation into the United States, or sold or offered for sale after importation into the United States, from 2006 to the present.

REQUEST NO. 17

Documents sufficient to identify each and every downstream product incorporating an Accused Product that is or has been imported into the United States, sold for importation into the United States, or sold or offered for sale after importation into the United States, from 2006 to the present.

REQUEST NO. 18

All documents that refer or relate to any actual or proposed modification, improvement, or change in any Accused Product, or any method and/or process of using any Accused Product, including attempts to design or re-design products or methods and/or processes to avoid infringement of any of the patents-in-suit.

REQUEST NO. 19

Documents sufficient to identify each and every Accused Product that is being planned, that has been designed, and/or that is in development.

REQUEST NO. 20

Five (5) samples of each version of each Accused Product, and all literature or documentation distributed with each Accused Product.

REQUEST NO. 21

All documents discussing or making reference to the quality, value, acceptability, workability, performance, or benefits of any Accused Product, including communications with anyone who has used an Accused Product praising, criticizing, or otherwise commenting on any Accused Product(s).

REQUEST NO. 22

All technical articles, conference papers, and technical or marketing presentations that refer or relate to any Accused Product and products containing same, the method

and/or process of using any Accused Product and products containing same, or that relate to the subject matter described in the patents-in-suit.

REQUEST NO. 23

All documents that refer or relate to any failures, problems with and/or complaints about any of the Accused Products and products containing same or the method and/or process of using any Accused Product and products containing same.

REQUEST NO. 24

All documents that refer or relate to uses, tests, or evaluations of the Accused Products and products containing same or the method and/or process of using any Accused Product and products containing same performed or conducted by BCD, BCD's customers, or any other third party that BCD is aware of.

REQUEST NO. 25

Documents sufficient to identify BCD's customers, purchasers, and resellers for the Accused Products or products containing same, from 2006 to the present.

REQUEST NO. 26

All documents that refer or relate to training any customer in the use of the Accused Products or products containing same.

REQUEST NO. 27

All documents referring to, relating to, or constituting patents, publications, written descriptions, or prior art references of which you are aware that concern, disclose, describe, or claim any invention disclosed, described or claimed in any of the patents-in-suit, or any product or method and/or process embodying or using any invention disclosed, described or claimed in any of the patents-in-suit.

REQUEST NO. 28

All documents that refer or relate to any document, reference, or activity alleged by anyone to be prior art to the patents-in-suit, or to affect the validity, enforceability, or scope of any of the patents-in-suit.

REQUEST NO. 29

All documents that refer or relate to knowledge or use by others of any invention disclosed, described, or claimed in any of the patents-in-suit, including assessments by others of the scope, infringement, or validity of any of the patents-in-suit.

REQUEST NO. 30

All documents that refer or relate to the making or use in this or another country of any invention disclosed, described, or claimed in the patents-in-suit, by one who had not abandoned, suppressed, or concealed it, that render any of the patents-in-suit invalid or unenforceable.

REQUEST NO. 31

All documents that BCD believes either alone or in combination anticipate or render obvious or in any other way render any of the patents-in-suit invalid or unenforceable.

REQUEST NO. 32

All documents that refer or relate to any prior art reference or potential prior art reference located, reviewed by, or cited to you during any study or search of domestic or foreign patents, literature, or other published materials relating in any manner to any of the patents-in-suit, including without limitation any study, search, or analysis to

determine the patentability, validity, enforceability, or enforceable scope of any of the claims of any of the patents-in-suit.

REQUEST NO. 33

All documents, including without limitation articles and internal technical memoranda authored by you that relate to the subject matter described, disclosed, or claimed in any of the patents-in-suit.

REQUEST NO. 34

All patents and patent applications (and related prosecution histories) owned, licensed, or controlled by BCD, from any jurisdiction, that refer or relate to the Accused Products or the method and/or process of using any Accused Product or products containing same.

REQUEST NO. 35

All documents referring or relating to when and how BCD first became aware of each of the patents-in-suit.

REQUEST NO. 36

All documents that relate or refer to any communication between BCD and any other person regarding any of the patents-in-suit or this litigation, including without limitation any reports, statements, or analyses by third parties.

REQUEST NO. 37

All documents referring or relating to any evaluation of possible liability for patent infringement should BCD commence or continue to make, use, distribute, or sell the Accused Products or products containing same, including without limitation any internal notes or memoranda.

REQUEST NO. 38

All documents referring or relating to any patentability or prior art investigations, search, study, evaluation, review, monitoring, or testing related to any of the patents-in-suit, including, but not limited to, documents relating to whether any Accused Product does or does not infringe any claim of any of the patents-in-suit, either literally or by equivalents.

REQUEST NO. 39

Documents sufficient to describe BCD's document retention, management, and/or destruction policies, including those with respect to e-mail, from 2006 to the present.

REQUEST NO. 40

To the extent not produced in response to a previous request, all documents, including communications between BCD and other persons, which refer to Power Integrations, Power Integrations' patents, or any Power Integrations product.

REQUEST NO. 41

To the extent not produced in response to previous requests, all documents referring or relating to the design, development, testing, simulation, or operation of the Accused Products, including components thereof, and including without limitation complete laboratory notebooks, schematics, engineering specifications, CAD files, and simulation files, in both hardcopy and electronic format.

REQUEST NO. 42

To the extent not produced in response to previous requests, all documents referring, relating to, or constituting any communications between, among, or within BCD Semiconductor Corporation and Shanghai SIM-BCD Semiconductor Manufacturing, Co., Ltd., or any worldwide sales agents acting on behalf of BCD,

regarding any of the Accused Products, including without limitation electronic mail in both hardcopy and electronic format.

REQUEST NO. 43

All documents referring or relating to any relationship between BCD Semiconductor Corporation and Shanghai SIM-BCD Semiconductor Manufacturing, Co., Ltd., including any worldwide sales agents acting on behalf of BCD, including without limitation any agreements, contracts, and/or licenses.

REQUEST NO. 44

All documents referring to, relating to, or comprising any license entered into or proposed by BCD to obtain rights to make, use, or sell the Accused Products or products containing same.

REQUEST NO. 45

All documents referring to, relating to, or comprising any contract or agreement by BCD to take a license to make, use, or sell any of the Accused Products or products containing same.

REQUEST NO. 46

All documents referring to, relating to, or comprising any decision by BCD to issue a license to any person for rights to any of the Accused Products or products containing same.

REQUEST NO. 47

All documents referring to, relating to, or comprising any request by any person for a license or indemnity from BCD for any of the Accused Products or products containing same.

REQUEST NO. 48

All documents referring or relating to any negotiations for a license under any BCD patent or patent application relating to the Accused Products.

REQUEST NO. 49

All Power Integrations products, marketing materials, brochures, product literature, application notes, package inserts, research and development materials, training materials, manuals, or other instructional documents or materials in your possession, custody, or control.

REQUEST NO. 50

All documents in BCD's possession that refer or relate to any Power Integrations product, including without limitation marketing materials, brochures, drawings, prototypes, notes, notebooks, workbooks, project reports, correspondence, memoranda, test results, and the source of and the manner in which you obtained the information.

REQUEST NO. 51

All documents that refer or relate to the extent to which you have relied upon, referred to, or otherwise used each item or information identified in response to Request for Production No. 50 in the conduct of your business, including without limitation, in designing, manufacturing, testing, advertising, marketing, promoting, and/or selling the Accused Products, training others to use the Accused Products, and/or comparing the Accused Products to any product provided by Power Integrations.

REQUEST NO. 52

All documents that refer or relate to any entities authorized or licensed to make, use, import into the United States, distribute, and/or sell the Accused Products, including without limitation all sales and distribution agreements, purchase orders, and invoices.

REQUEST NO. 53

A complete set of schematics for each Accused Product, including without limitation schematics sufficient to disclose the structure of the circuits associated with the "frequency dither" and "V_{CC}/Feedback Control" features as those terms are used in BCD's literature.

REQUEST NO. 54

All documents that refer or relate to communication with field sales personnel, whether employed by BCD or otherwise, related to any Accused Product, including without limitation communications reflecting customers for the Accused Products, identification of projects or products incorporating or using the Accused Products, expected volume of sales for the Accused Products, and pricing of the Accused Products.

REQUEST NO. 55

All documents that refer or relate to reports from field sales agents, distributors, and representatives of field sales agents and distributors acting on behalf of BCD related to any Accused Product, including without limitation point of sale reports, including, but not limited to, specific sales numbers for each of the fifty United States, any reports identifying any third party end user for the Accused Products, third party end user applications for the Accused Products, and third party end user projects or products either currently using or planning to use the Accused Products.

REQUEST NO. 56

All documents that refer or relate to any communications with a third party to whom BCD has provided application notes for the Accused Products, including without limitation the identity of the third parties and copies of the application note(s) that were provided to the third parties.

REQUEST NO. 57

All documents that refer or relate to any communications with any third party to whom BCD has provided reference designs or demonstration boards for the Accused

Products, including without limitation the identity of the third parties and the reference designs and/or demonstration boards that were provided to any third party for each of the Accused Products.

REQUEST NO. 58

All documents that refer or relate to receiving any request for samples of the Accused Products or providing samples of the Accused Products, including without limitation requests received through the internet.

REQUEST NO. 59

Documents sufficient to show the quantity, in total and by month or quarter, of each of the Accused Products made or sold by BCD from 2006 to the present.

REQUEST NO. 60

All documents that refer or relate to any comparison between the pricing of the Accused Products and Power Integrations' products, including without limitation communications reflecting pricing information of Power Integrations' products received from any third party.

REQUEST NO. 61

All documents sufficient to show the quantity, by state, and by method of sale or marketing, of all sales, shipping, or marketing of the Accused Products and downstream products in each of the fifty United States, including, but not limited to, purchases made over the internet.

REQUEST NO. 62

All documents posted on BCD's publically available website that refer or relate to any Accused Products and products containing same or the method and/or process of using any Accused Product and products containing same, including, but not limited to, the availability for purchase, shipping methods and costs of purchased products.

REQUEST NO. 63

All documents referring or relating to contracts entered into by BCD or any of its agents, customers or distributors, with any Delaware corporation.

REQUEST NO. 64

All documents referring or relating to any business dealings between BCD or any of its agents, customers or distributors, with any Delaware corporation.

REQUEST NO. 65

All contracts or agreements between BCD and any customers or distributors, regarding the use, distribution, or resale of any BCD product.

REQUEST NO. 66

Documents sufficient to identify each sales agent or distributor who sells or distributes any Accused Product and the geographic area or region for which each such distributor or sales agent is responsible.

REQUEST NO. 67

All documents referring or relating to the distribution or sale of cell phone chargers and cell phones, including documents referring or relating to the established distribution channels for the distribution of cell phone chargers into and within the United States, the identity of suppliers of chargers to cell phone manufacturers, the identity of manufacturers of cell phones distributed in the United States, the identity of distributors of chargers and cell phones in the United States and the identity of retailers of chargers and cell phones in the United States.

REQUEST NO. 68

Documents sufficient to show all inquiries made to BCD though its web site(s) from locations within the United States, including the address from which each such inquiry came, the nature of the inquiry, and BCD's response.

Dated: January 25, 2008

FISH & RICHARDSON P.C.

By: _____

William J. Marsden, Jr. (#2247)
Kyle Wagner Compton (#4693)
919 N. Market Street, Suite 1100
P.O. Box 1114
Wilmington, DE 19801
Telephone: (302) 652-5070
Facsimile: (302) 652-0607
Email: marsden@fr.com
Email: kcompton@fr.com

Frank E. Scherkenbach
225 Franklin Street
Boston, MA 02110-2804
Telephone: (617) 542-5070
Facsimile: (617) 542-8906

Howard G. Pollack
Michael R. Headley
500 Arguello Street, Suite 500
Redwood City, CA 94063
Telephone: (650) 839-5070
Facsimile: (650) 839-5071

Attorneys for Plaintiff
POWER INTEGRATIONS, INC.

CERTIFICATE OF SERVICE

I hereby certify that on this 25th day of January, 2008, a true and correct copy of **PLAINTIFF POWER INTEGRATIONS, INC.'S FIRST SET OF REQUESTS FOR PRODUCTION OF DOCUMENTS AND THINGS TO BCD SEMICONDUCTOR CORPORATION and SHANGHAI SIM-BCD SEMICONDUCTOR MANUFACTURING, CO., LTD (NOS. 1 - 68)** the was caused to be served on the attorneys of record via First Class Mail at the following addresses as indicated:

Steven J. Balick, Esq. John G. Day, Esquire Ashby & Geddes 222 Delaware Avenue, 17th Floor P. O. Box 1150 Wilmington, DE 19899	Defendant-Counterclaimant
E. Robert Yoches Joyce Craig Finnegan, Henderson, Farabow, Garrett & Dunner, L.L.P. 901 New York Avenue, NW Washington, DC 20001-4413	Attorneys for Defendants BCD SEMICONDUCTOR CORPORATION and SHANGHAI SIM-BCD SEMICONDUCTOR MANUFACTURING, CO., LTD
Erik R. Puknys Finnegan, Henderson, Farabow, Garrett & Dunner LLP Stanford Research Park 3300 Hillview Avenue Palo Alto, CA 94304-1203	Attorneys for Defendants BCD SEMICONDUCTOR CORPORATION and SHANGHAI SIM-BCD SEMICONDUCTOR MANUFACTURING, CO., LTD
Robert L. Burns Finnegan, Henderson, Farabow, Garrett & Dunner LLP Two Freedom Drive Reston, VA 20190-5675	Attorneys for Defendants BCD SEMICONDUCTOR CORPORATION and SHANGHAI SIM-BCD SEMICONDUCTOR MANUFACTURING, CO., LTD

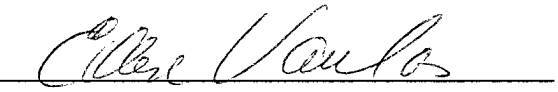

Ellen Varelas

Exhibit H

Preliminary Datasheet

PRIMARY SIDE CONTROL IC FOR OFF-LINE BATTERY CHARGERS AP3706

General Description

The AP3706 is a high performance AC/DC power supply controller for battery charger and adapter applications. The device uses Pulse Frequency Modulation (PFM) method to build discontinuous conduction mode (DCM) flyback power supplies.

The AP3706 provides constant voltage, constant current (CV/CC) regulation without requiring an opto-coupler and secondary control circuitry. It also eliminates the need of loop compensation circuitry while maintaining stability.

The AP3706 achieves excellent regulation and high power efficiency, the no-load power consumption is less than 200mW at 265VAC input.

The AP3706 is available in SOIC-8 package.

Features

- Primary Side Control for Rectangular Constant Current and Constant Voltage Output
- Eliminates Opto-Coupler and Secondary CV/CC Control Circuitry
- Eliminates Control Loop Compensation Circuitry
- Flyback Topology in DCM Operation
- Random Frequency Modulation to Reduce System EMI
- Valley Turn on of External Power NPN Transistor
- Built-in Soft Start
- Open Circuit Protection
- Over Voltage Protection
- Short Circuit Protection

Applications

- Adapters/Chargers for Cell/Cordless Phones, PDAs, MP3 and Other Portable Apparatus
- Standby and Auxiliary Power Supplies



SOIC-8

Figure 1. Package Type of AP3706

Pin Configuration

M Package
(SOIC-8)

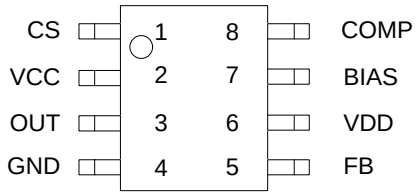

Figure 2. Pin Configuration of AP3706 (Top View)

Pin Description

Pin Number	Pin Name	Function
1	CS	The primary current sense
2,	VCC	Supply voltage
3	OUT	This pin drives the base of external power NPN switch
4	GND	Ground
5	FB	The voltage feedback from the auxiliary winding
6	VDD	The 5V output of the internal voltage regulator
7	BIAS	This pin sets the bias current inside AP3706 with an external resistor to GND
8	COMP	This pin connects a bypass capacitor for CC function

Functional Block Diagram

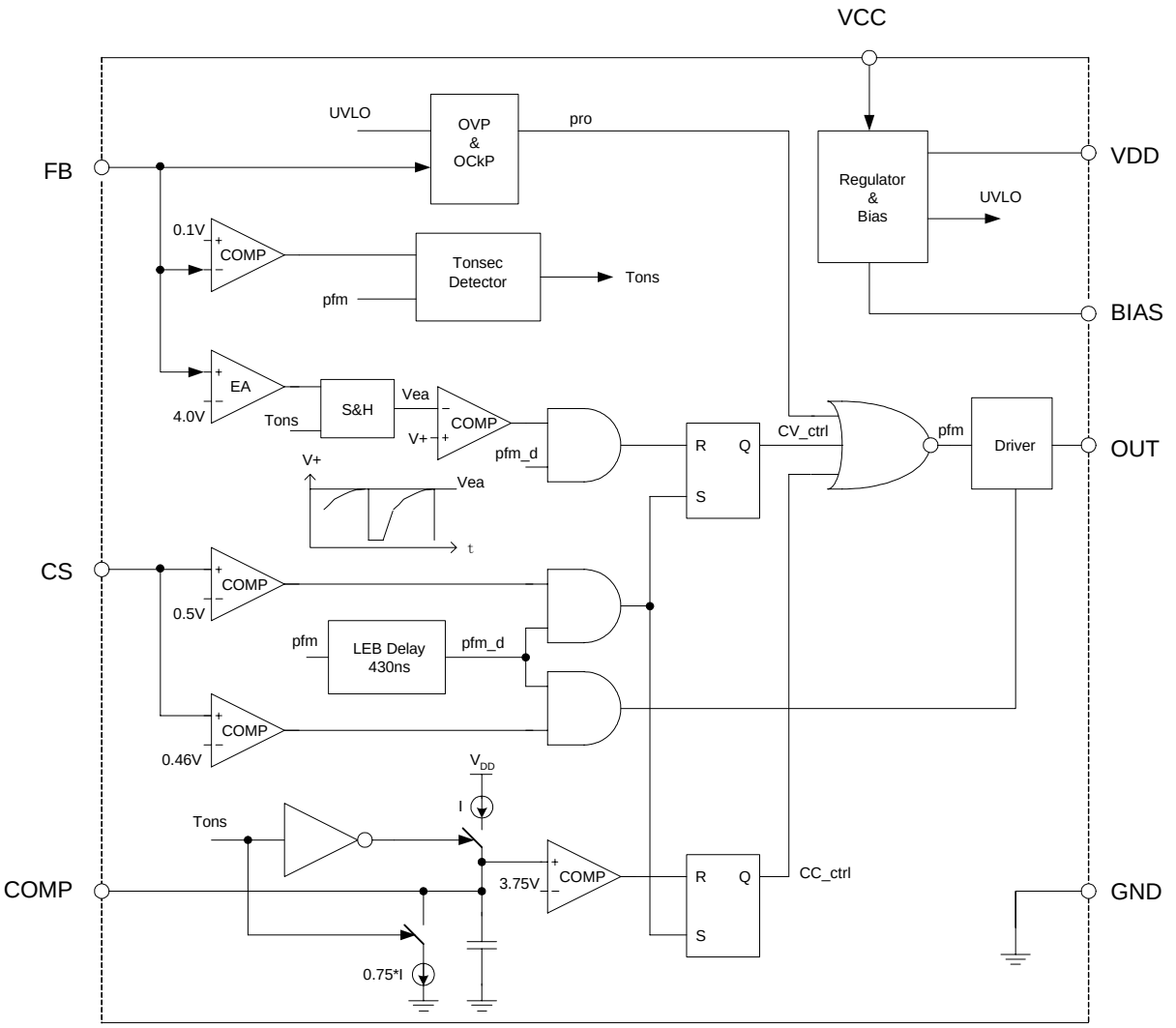

Figure 3. Functional Block Diagram of AP3706

PRIMARY SIDE CONTROL IC FOR OFF-LINE BATTERY CHARGERS AP3706

Ordering Information

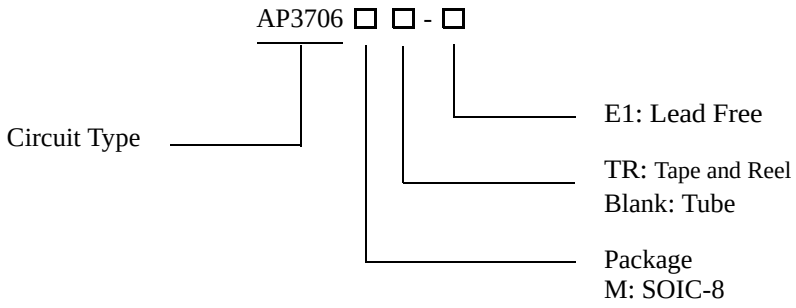

Package	Temperature Range	Part Number	Marking ID	Packing Type
SOIC-8	-40 to 85°C	AP3706M-E1	3706M-E1	Tube
		AP3706MTR-E1	3706M-E1	Tape & Reel

BCD Semiconductor's Pb-free products, as designated with "E1" suffix in the part number, are RoHS compliant.

Absolute Maximum Ratings (Note 1)

Parameter	Value	Unit
Supply Voltage VCC	-0.3 to 30	V
Voltage at CS, BIAS, OUT, VDD, COMP to GND	-0.3 to 7	V
FB input (Pin 5)	-40 to 10	V
Output Current at OUT	Internally limited	A
Power Dissipation at T_A=25°C	0.657	W
Operating Junction Temperature	150	°C
Storage Temperature	-65 to 150	°C
Lead Temperature (Soldering, 10s)	300	°C
Thermal Resistance Junction-to-Ambient	190	°C/W
ESD (Machine Model)	200	V

Note 1: Stresses greater than those listed under "Absolute Maximum Ratings" may cause permanent damage to the device. These are stress ratings only, and functional operation of the device at these or any other conditions beyond those indicated under "Recommended Operating Conditions" is not implied. Exposure to "Absolute Maximum Ratings" for extended periods may affect device reliability.

Electrical Characteristics

(V_{CC}=15V, T_A=25°C, unless otherwise specified.)

Parameter		Symbol	Conditions	Min	Typ	Max	Unit
UVLO SECTION							
Start-up Threshold		$V_{TH\ (ST)}$		17	18.5	20	V
Minimal Operating Voltage		V_{OPR}(min)	After turn on	6.7	7.4	8.1	V
REFERENCE VOLTAGE SECTION							
BIAS Pin Voltage		V_{BIAS}	R_{BIAS}=200kΩ, Before turn on	1.170	1.205	1.240	V
VDD Pin Voltage		VDD		4.75	5.0	5.25	V
STANDBY CURRENT SECTION							
Start-up Current		I_{ST}	V_{CC} = $V_{TH\ (ST)}$-0.5V, R_{BIAS}=200kΩ, Before turn on		70	80	μA
Operating Current		$I_{CC(OPR)}$	R_{BIAS}=200kΩ		680	900	μA
DRIVE OUTPUT SECTION							
OUT Maximum Current	Sink	I_{OUT}	R_{BIAS}=200kΩ	50			mA
	Source			25	30		
CURRENT SENSE SECTION							
Current Sense Threshold		V_{CS}		480	500	520	mV
Pre-Current Sense		$V_{CS(PRE)}$		440	460	480	mV
Leading Edge Blanking					430		ns
FEEDBACK INPUT SECTION							
Feedback Threshold		V_{FB}		3.90	4.00	4.10	V
Enable Turn-on Voltage		$V_{FB(EN)}$		-0.9	-0.7	-0.5	V
COMP THRESHOLD VOLTAGE SECTION							
Turn-on Threshold Voltage		V_{COMP}		3.42	3.60	3.78	V
PROTECTION SECTION							
Over Voltage Protection		$V_{FB(OVP)}$		7	8	9	V

Typical Performance Characteristics

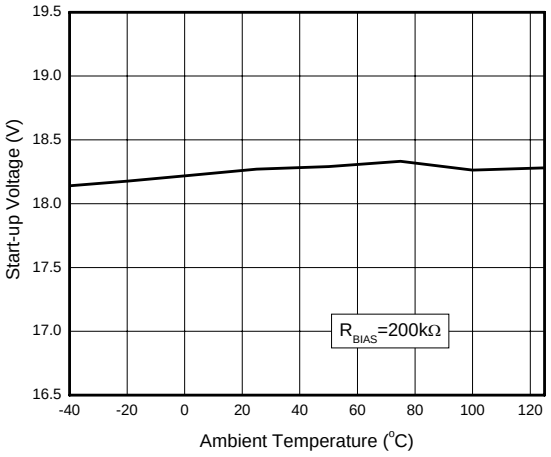

Figure 4. Start-up Voltage vs. Ambient Temperature

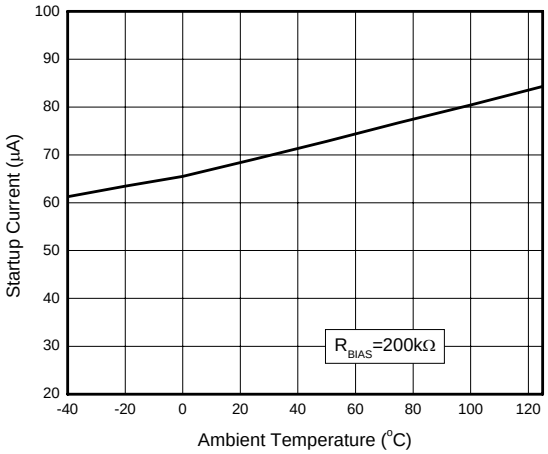

Figure 5. Start-up Current vs. Ambient Temperature

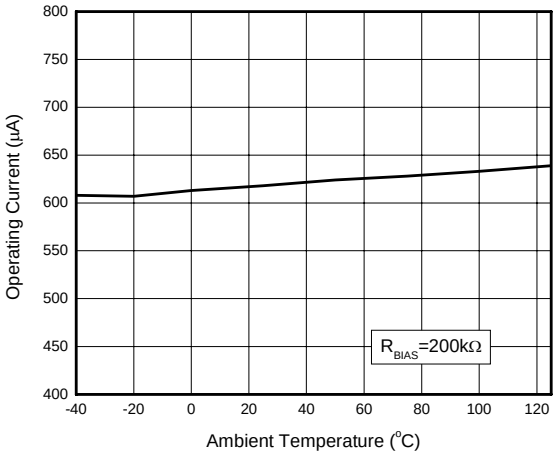

Figure 6. Operating Current vs. Ambient Temperature

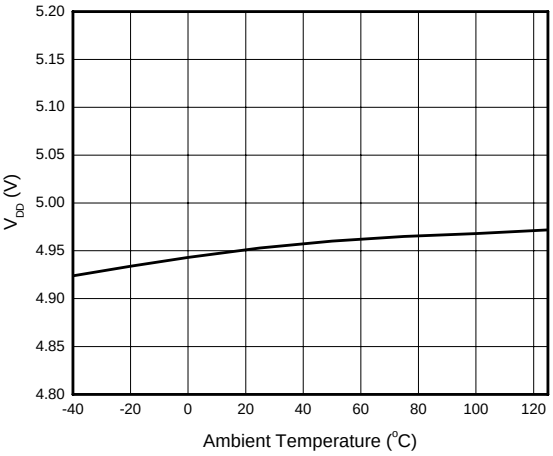

Figure 7. V_{DD} vs. Ambient Temperature

Typical Performance Characteristics (Continued)

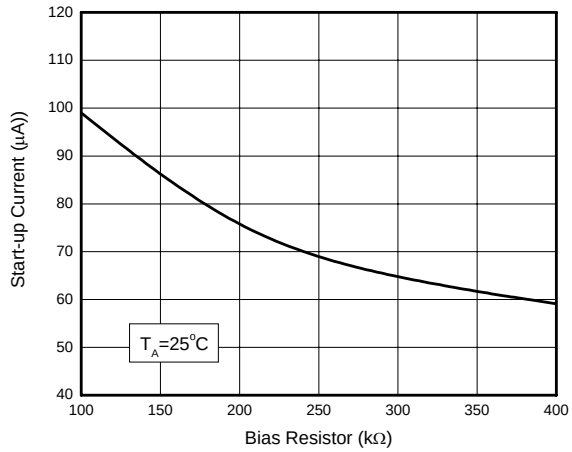

Figure 8. Start-up Current vs. Bias Resistor

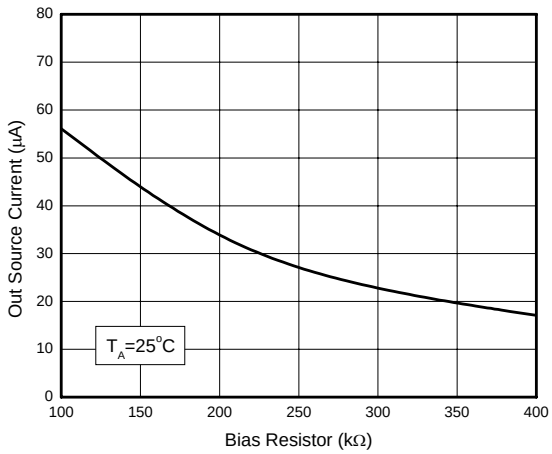

Figure 9. OUT Source Current vs. Bias Resistor

Operation Description

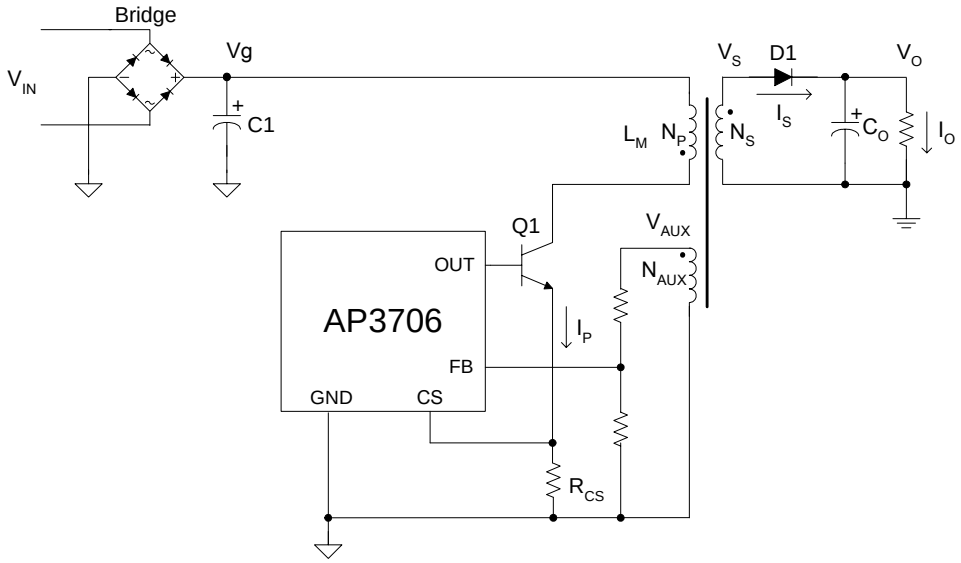

Figure 10. Simplified Flyback Converter Controlled by AP3706

Figure 10 illustrates a simplified flyback converter controlled by AP3706.

Constant Primary Peak Current

The primary current ip(t) is sensed by a current sense resistor R_{CS} as shown in Figure 10.

The current rises up linearly at a rate of:

$$\frac{dip(t)}{dt} = \frac{vg(t)}{L_M} \qquad \text{.....(1)}$$

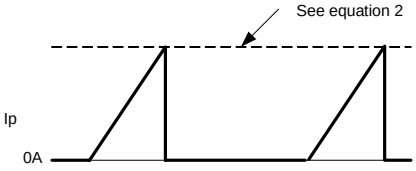

Figure 11. Primary Current Waveform

As illustrated in Figure 11, when the current ip(t) rises up to Ipk, the switch Q1 turns off. The constant peak current is given by:

$$Ipk = \frac{Vcs}{Rcs} \qquad \text{.....(2)}$$

The energy stored in the magnetizing inductance LM each cycle is therefore:

$$Eg = \frac{1}{2} \cdot L_M \cdot Ipk^2 \qquad \text{.....(3)}$$

So the power transferring from the input to the output is given by:

$$P = \frac{1}{2} \cdot L_M \cdot Ipk^2 \cdot f_{SW} \qquad \text{.....(4)}$$

Where the fsw is the switching frequency. When the peak current Ipk is constant, the output power depends on the switching frequency fsw.

Constant Voltage Operation

The AP3706 captures the auxiliary winding feedback voltage at FB pin and operates in constant-voltage (CV) mode to regulate the output voltage. Assuming the secondary winding is master, the auxiliary winding is slave during the D1 on-time. The auxiliary voltage is given by:

$$V_{AUX} = \frac{N_{AUX}}{N_S} \cdot (Vo + Vd) \qquad \text{.....(5)}$$

Operation Description (Continued)

Where the Vd is the diode forward drop voltage.

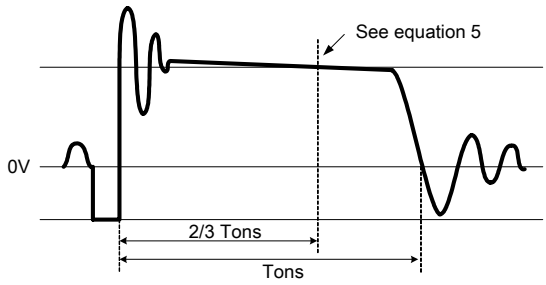

Figure 12. Auxiliary Voltage Waveform

The output voltage is different from the secondary voltage in a diode forward drop voltage. The diode drop voltage depends on the current. If the secondary voltage is always detected at a constant secondary current, the difference between the output voltage and the secondary voltage will be a fixed Vd. The voltage detection point is at two-thirds of the D1 on-time. The CV loop control function of AP3706 then generates a D1 off-time to regulate the output voltage.

Constant Current Operation

The AP3706 is designed to work in constant-current (CC) mode. Figure 13 shows the secondary current waveforms.

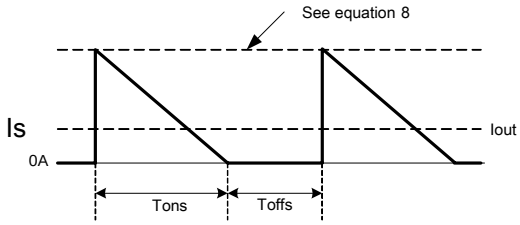

Figure 13. Secondary Current Waveform

In CC operation, the CC loop control function of AP3706 will keep a fixed proportion between D1 on-time Tons and D1 off-time Toffs by discharging or charging the capacitance connected in COMP pin. The fixed proportion is

$$\frac{Tons}{Toffs}=\frac{4}{3} \qquad \text{.....(6)}$$

The relationship between the output constant-current and secondary peak current Ipks is given by:

$$Iout=\frac{1}{2}\cdot Ipks\cdot\frac{Tons}{Tons+Toffs} \qquad \text{.....(7)}$$

At the instant of D1 turn-on, the primary current transfers to the secondary at an amplitude of:

$$Ipks=\frac{N_P}{N_S}\cdot Ipk \qquad \text{.....(8)}$$

Thus the output constant-current is given by:

$$Iout=\frac{1}{2}\cdot\frac{N_P}{N_S}\cdot Ipk\cdot\frac{Tons}{Tons+Toffs}=\frac{2}{7}\cdot\frac{N_P}{N_S}\cdot Ipk \qquad \text{.....(9)}$$

Leading Edge Blanking

When the power switch is turned on, a turn-on spike will occur on the sense-resistor. To avoid false-termination of the switching pulse, a 430ns leading-edge blanking is built in. During this blanking period, the current sense comparator is disabled and the gate driver can not be switched off.

CCM Protection

The AP3706 is designed to operate in discontinuous conduction mode (DCM) in both CV and CC modes. To avoid operating in continuous conduction mode (CCM), the AP3706 detects the falling edge of the FB input voltage on each cycle. If a 0.1V falling edge of FB is not detected, the AP3706 will stop switching.

OVP & OCkP

The AP3706 includes output over-voltage protection (OVP) and open circuit protection (OCkP) circuitry as shown in Figure 14. If the voltage at FB pin exceeds 8V, 100% above the normal detection voltage, or the -0.7V falling edge of the FB input can not be monitored, the AP3706 will immediately shut off and enters hiccup mode. The AP3706 sends out a fault detection pulse every 8ms in hiccup mode until the fault has been removed.

Operation Description (Continued)

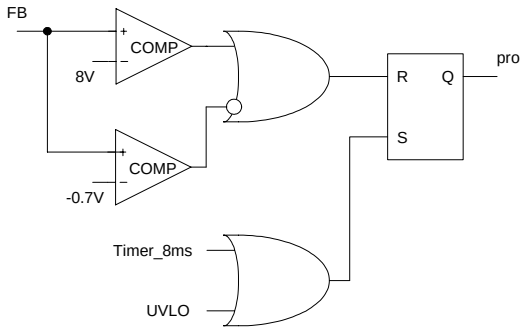

Figure 14. OVP and OCkP Function Block

Typical Application

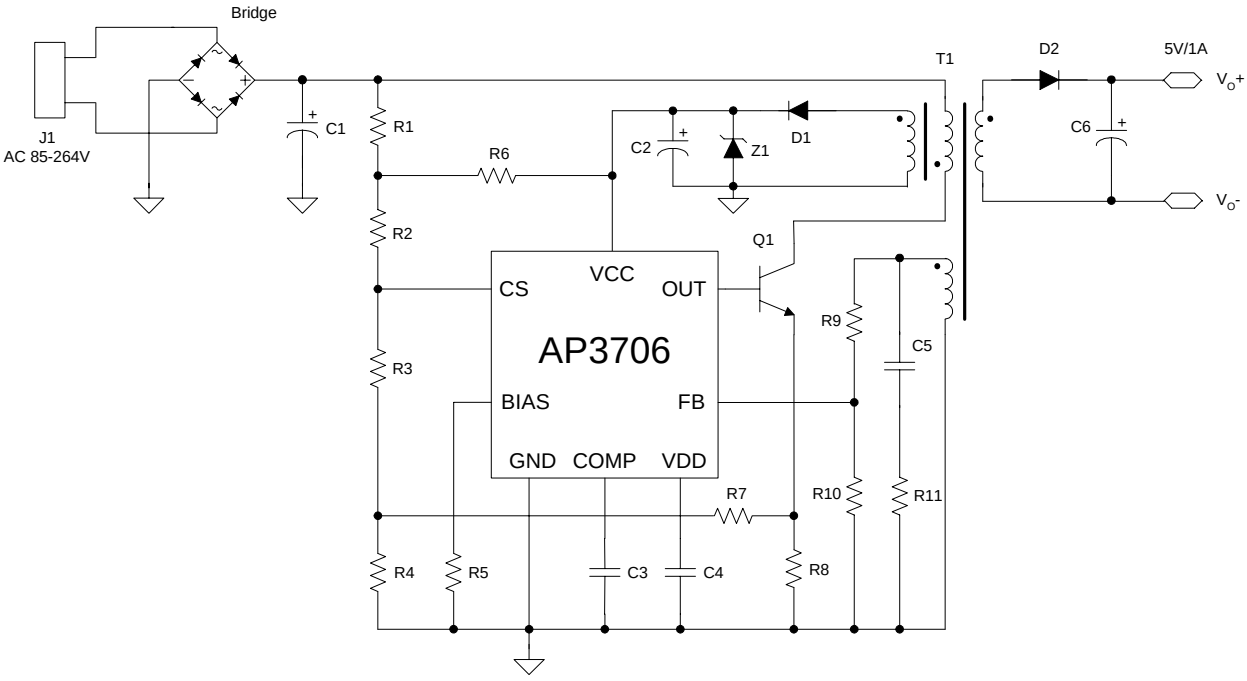

Figure 15. 5V/1A Output for Battery Charger of Mobile Phone

Mechanical Dimensions

SOIC-8 **Unit: mm(inch)**

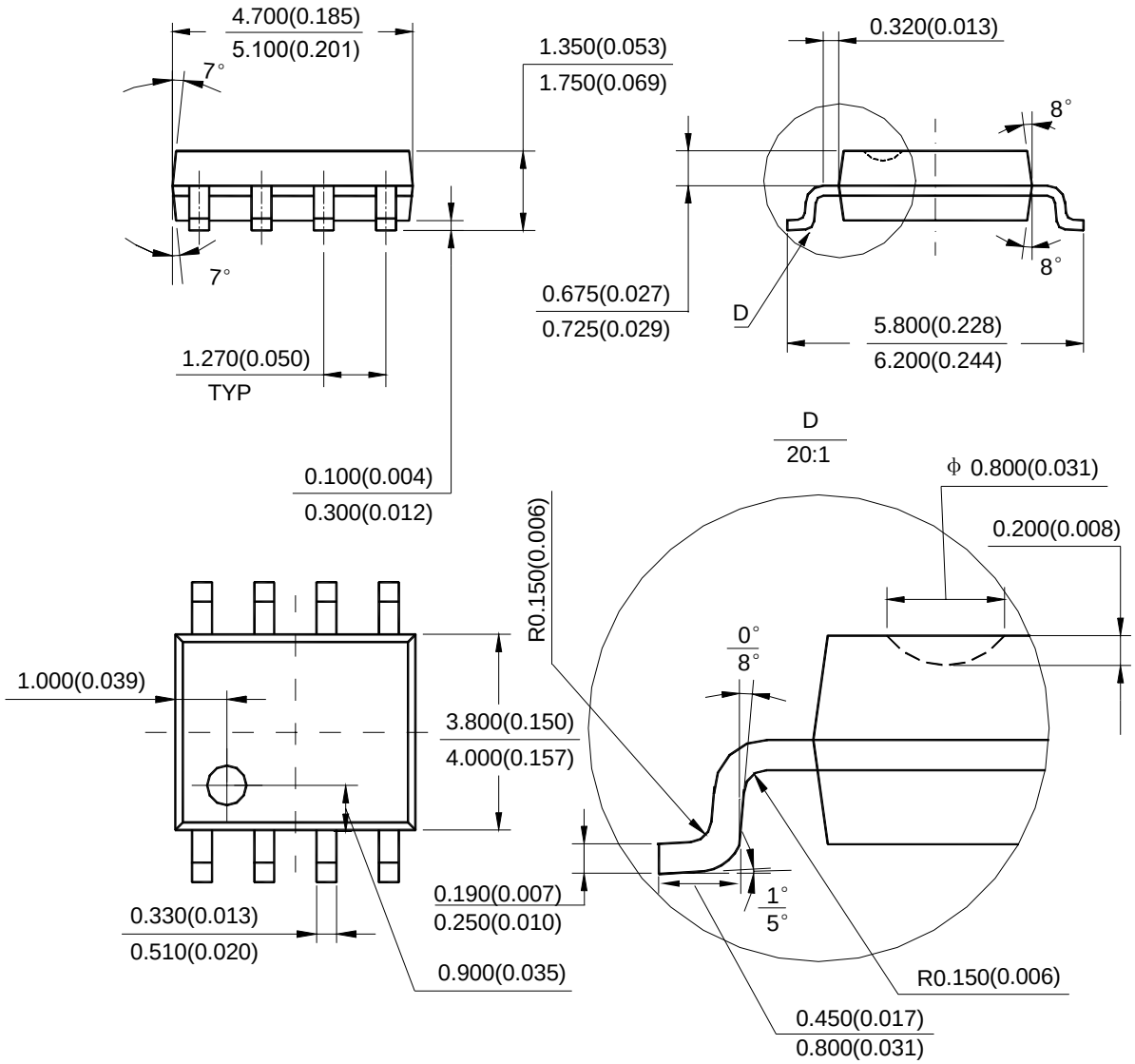

BCD Semiconductor Manufacturing Limited

http://www.bcdsemi.com

IMPORTANT NOTICE

BCD Semiconductor Manufacturing Limited reserves the right to make changes without further notice to any products or specifications herein. BCD Semiconductor Manufacturing Limited does not assume any responsibility for use of any its products for any particular purpose, nor does BCD Semiconductor Manufacturing Limited assume any liability arising out of the application or use of any its products or circuits. BCD Semiconductor Manufacturing Limited does not convey any license under its patent rights or other rights nor the rights of others.

MAIN SITE

- Headquarters
BCD Semiconductor Manufacturing Limited
No. 1600, Zi Xing Road, Shanghai ZiZhu Science-based Industrial Park, 200241, China
Tel: +86-21-24162266, Fax: +86-21-24162277

- Wafer Fab
Shanghai SIM-BCD Semiconductor Manufacturing Co., Ltd.
800 Yi Shan Road, Shanghai 200233, China
Tel: +86-21-6485 1491, Fax: +86-21-5450 0008

REGIONAL SALES OFFICE

Shenzhen Office
Shanghai SIM-BCD Semiconductor Manufacturing Co., Ltd., Shenzhen Office
Room E, 5F, Noble Center, No.1006, 3rd Fuzhong Road, Futian District, Shenzhen, 518026, China
Tel: +86-755-8826 7951
Fax: +86-755-8826 7865

Taiwan Office
BCD Semiconductor (Taiwan) Company Limited
4F, 298-1, Rui Guang Road, Nei-Hu District, Taipei, Taiwan
Tel: +886-2-2656 2808
Fax: +886-2-2656 2806

USA Office
BCD Semiconductor Corp.
30920 Huntwood Ave. Hayward, CA 94544, USA
Tel : +1-510-324-2988
Fax: +1-510-324-2788