IN THE UNITED STATES DISTRICT COURT
FOR THE DISTRICT OF DELAWARE

ACUITY BRANDS, INC., ACUITY BRANDS LIGHTING, INC., and ABL IP HOLDING LLC,	)	C.A. No. 07-444-GMS
Plaintiffs and Counterdefendants,	)	
v.	)	
COOPER LIGHTING, INC.,	)	
Defendant and Counterplaintiff.	)	

AMENDED ANSWER, AFFIRMATIVE DEFENSES, AND COUNTERCLAIM TO AMENDED COMPLAINT

Defendant Cooper Lighting, Inc. ("Cooper Lighting") responds to Plaintiffs Acuity Brands, Inc., Acuity Brands Lighting, Inc., and ABL IP Holding LLC's (collectively, "Acuity's") Amended Complaint (the "Complaint") as follows:

ANSWER

1. Cooper Lighting lacks sufficient knowledge or information to form a belief as to the allegations in Paragraph 1 of the Complaint, and on that basis denies them.

2. Cooper Lighting lacks sufficient knowledge or information to form a belief as to the allegations in Paragraph 2 of the Complaint, and on that basis denies them.

3. Cooper Lighting lacks sufficient knowledge or information to form a belief as to the allegations in Paragraph 3 of the Complaint, and on that basis denies them.

4. Admitted.

5. Cooper Lighting admits that Acuity's Complaint purports to state a claim under the patent laws of the United States.

6. Admitted.

7. Admitted.

8. Cooper Lighting admits that on its face, United States Patent No. 7,229,192 B2 ("the '192 patent"), attached as Exhibit A to the Complaint, has the issuance date, title and inventors alleged in Paragraph 8. Cooper Lighting lacks sufficient knowledge or information to form a belief as to the remaining allegations in Paragraph 8 of the Complaint, and on that basis denies them.

9. Cooper Lighting admits that on its face, United States Patent No. D541,467 S ("the '467 patent"), attached as Exhibit B to the Complaint, has the issuance date, title and inventors alleged in Paragraph 9. Cooper Lighting lacks sufficient knowledge or information to form a belief as to the remaining allegations in Paragraph 9 of the Complaint, and on that basis denies them.

10. Cooper Lighting admits that on its face, United States Patent No. D541,468 S ("the '468 patent"), attached as Exhibit C to the Complaint, has the issuance date, title, and inventors alleged in Paragraph 10. Cooper Lighting lacks sufficient knowledge or information to form a belief as to the remaining allegations in Paragraph 10 of the Complaint, and on that basis denies them.

11. Cooper Lighting admits that on its face, United States Patent No. D544,633 S ("the '633 patent"), attached as Exhibit D to the Complaint, has the issuance date, title, and inventors alleged in Paragraph 11. Cooper Lighting lacks sufficient knowledge or information to form a belief as to the remaining allegations in Paragraph 11 of the Complaint, and on that basis denies them.

12. Cooper Lighting admits that on its face, United States Patent No. D544,992 S ("the '992 patent"), attached as Exhibit E to the Complaint, has the issuance date, title, and inventors alleged in Paragraph 12. Cooper Lighting lacks sufficient knowledge or

information to form a belief as to the remaining allegations in Paragraph 12 of the Complaint, and on that basis denies them.

13. Cooper Lighting admits that on its face, United States Patent No. D544,993 S ("the '993 patent"), attached as Exhibit F to the Complaint, has the issuance date, title, and inventors alleged in Paragraph 13. Cooper Lighting lacks sufficient knowledge or information to form a belief as to the remaining allegations in Paragraph 13 of the Complaint, and on that basis denies them.

14. Cooper Lighting admits that on its face, United States Patent No. D545,481 S ("the '481 patent"), attached as Exhibit G to the Complaint, has the issuance date, title, and inventors alleged in Paragraph 14. Cooper Lighting lacks sufficient knowledge or information to form a belief as to the remaining allegations in Paragraph 14 of the Complaint, and on that basis denies them.

15. Cooper Lighting admits that on its face, United States Patent No. D545,483 S ("the '483 patent"), attached as Exhibit H to the Complaint, has the issuance date, title, and inventors alleged in Paragraph 15. Cooper Lighting lacks sufficient knowledge or information to form a belief as to the remaining allegations in Paragraph 15 of the Complaint, and on that basis denies them.

16. Cooper Lighting admits that on its face, United States Patent No. D545,991 S ("the '991 patent"), attached as Exhibit I to the Complaint, has the issuance date, title, and inventors alleged in Paragraph 16. Cooper Lighting lacks sufficient knowledge or information to form a belief as to the remaining allegations in Paragraph 16 of the Complaint, and on that basis denies them.

17. Cooper Lighting repeats, realleges, and reincorporates by reference its answers to Paragraphs 1 through 16 of the Complaint as though fully set forth herein.

18. Denied.

19. Denied.

20. Denied.

21. Denied.

22. Cooper Lighting repeats, realleges, and reincorporates by reference its answers to Paragraphs 1 through 21 of the Complaint as though fully set forth herein.

23. Denied.

24. Denied.

25. Denied.

26. Denied.

27. Cooper Lighting repeats, realleges, and reincorporates by reference its answers to Paragraphs 1 through 26 of the Complaint as though fully set forth herein.

28. Denied.

29. Denied.

30. Denied.

31. Denied.

32. Cooper Lighting repeats, realleges, and reincorporates by reference its answers to Paragraphs 1 through 31 of the Complaint as though fully set forth herein.

33. Denied.

34. Denied.

35. Denied.

36. Denied.

37. Cooper Lighting repeats, realleges, and reincorporates by reference its answers to Paragraphs 1 through 36 of the Complaint as though fully set forth herein.

38. Denied.

39. Denied.

40. Denied.

41. Denied.

42. Cooper Lighting repeats, realleges, and reincorporates by reference its answers to Paragraphs 1 through 41 of the Complaint as though fully set forth herein.

43. Denied.

44. Denied.

45. Denied.

46. Denied.

47. Cooper Lighting repeats, realleges, and reincorporates by reference its answers to Paragraphs 1 through 46 of the Complaint as though fully set forth herein.

48. Denied.

49. Denied.

50. Denied.

51. Denied.

52. Cooper Lighting repeats, realleges, and reincorporates by reference its answers to Paragraphs 1 through 51 of the Complaint as though fully set forth herein.

53. Denied.

54. Denied.

55. Denied.

56. Denied.

57. Cooper Lighting repeats, realleges, and reincorporates by reference its answers to Paragraphs 1 through 56 of the Complaint as though fully set forth herein.

58. Denied.

59. Denied.

60. Denied.

61. Denied.

62. Cooper Lighting denies that Acuity is entitled to the relief requested in its "Prayer For Relief" or any relief whatsoever.

AFFIRMATIVE DEFENSES

Cooper Lighting asserts the following affirmative defenses. By raising these Affirmative Defenses, Cooper Lighting does not assume any burden of proof otherwise borne by Acuity.

FIRST AFFIRMATIVE DEFENSE

(Non-Infringement)

Cooper Lighting does not infringe any valid claim of the '192 patent, '467 patent, the '468 patent, the '633 patent, the '992 patent, the '993 patent, the '481 patent, the '483 patent, and the '991 patent (collectively, "the Patents").

SECOND AFFIRMATIVE DEFENSE

(Invalidity)

The claims of the Patents are invalid for failure to meet the conditions for patentability set forth in 35 U.S.C. §101 *et seq.*, including §§ 102, 103, 112 and 171.

THIRD AFFIRMATIVE DEFENSE

(Additional Affirmative Defenses)

Cooper Lighting will rely on any and all further defenses that become available or appear during discovery or other proceedings, and specifically reserves the right to amend this Answer to assert any such additional affirmative defenses.

WHEREFORE, Cooper Lighting seeks an order dismissing the Complaint with prejudice, awarding Cooper Lighting its costs and reasonable attorneys fees under 35 U.S.C. § 285, and granting Cooper Lighting such other relief as the Court deems just and proper.

COUNTERCLAIM

Cooper Lighting, Inc. hereby submits its Counterclaim against Acuity Brands Lighting, Inc. and alleges the following in support thereof:

THE PARTIES

1. Cooper Lighting, Inc. ("Cooper Lighting") is a Delaware corporation with its principal place of business at 1121 Highway 74 South, Peachtree City, Georgia 30269.

2. On information and belief, Acuity Brands, Inc. is a Delaware corporation with offices at 1170 Peachtree Street, NE, Suite 2400, Atlanta, Georgia 30309.

3. On information and belief, Acuity Brands Lighting, Inc. ("Acuity Lighting") is a Delaware corporation with offices at One Lithonia Way, Conyers, Georgia 30012.

4. On information and belief, ABL IP Holding LLC is a Georgia limited liability company with offices at One Lithonia Way, Conyers, Georgia 30012. Acuity Brands, Inc., Acuity Lighting, and ABL IP Holding LLC will be referred to collectively as "Acuity."

JURISDICTION AND VENUE

5. Cooper Lighting's Counterclaim arises under the Patent Laws of the United States, 35 U.S.C. § 1 *et seq*.

6. This Court has jurisdiction over the subject matter of this Counterclaim pursuant to 28 U.S.C. §§ 1331 and 1338(a).

7. Venue is proper in the United States District Court for the District of Delaware pursuant to 28 U.S.C. §§ 1391(b)-(c) and 1400(b).

COUNT I

(Infringement of the '830 Patent)

8. Cooper Lighting repeats the allegations set forth in Paragraphs 1 through 7 above as if fully set forth herein.

9. Cooper Lighting is the owner by assignment of United States Patent No. 6,644,830 B2, issued on November 11, 2003, entitled HIGH OUTPUT LAMP SOFTENER ("the '830 patent"). A copy of the '830 Patent is attached hereto as Exhibit A.

10. Acuity Lighting has been and is infringing, inducing the infringement of and/or contributorily infringing the '830 patent by making, using, selling, and/or offering for sale in the United States without license from Cooper Lighting at least the following: Acuity Lighting's Lithonia Lighting® dual-lamp RT5™ light fixtures.

11. As a result of Acuity Lighting's infringing activities, Cooper Lighting has been and will be damaged. Consequently, Cooper Lighting is entitled to compensation for these damages from Acuity Lighting pursuant to 35 U.S.C. § 284 in an amount that cannot be presently quantified, but will be ascertained at trial.

12. Acuity Lighting's infringing activities are ongoing and will continue to cause Cooper Lighting irreparable injury unless permanently enjoined by this Court.

COUNT II

(Declaratory Judgment of Non-Infringement)

13. Cooper Lighting repeats the allegations set forth in Paragraphs 1 through 7 above as if fully set forth herein.

14. On November 8, 2007, Acuity filed an Amended Complaint against Cooper Lighting alleging infringement of the '192 patent, the '467 patent, the '468 patent, the '633 patent, the '992 patent, the '993 patent, the '481 patent, the '483 patent, and the '991 patent

(collectively, "the Patents"). Cooper Lighting contends that it does not infringe any valid claim of the Patents. Accordingly, an actual and justiciable controversy exists between Acuity and Cooper Lighting regarding Cooper Lighting's alleged infringement of the Patents.

15. A judicial declaration that Cooper Lighting does not infringe any valid claim of the Patents is necessary and appropriate at this time so that Cooper Lighting can ascertain its rights and duties with respect to its accused activities relating to making, using, selling, and/or offering for sale in the United States certain light fixtures.

COUNT III

(Declaratory Judgment of Invalidity)

16. Cooper Lighting repeats the allegations set forth in Paragraphs 1 through 7 above as if fully set forth herein.

17. On November 8, 2007, Acuity filed an Amended Complaint against Cooper Lighting alleging infringement of the Patents. Cooper Lighting contends that the Patents are invalid for failure to meet the conditions for patentability set forth in 35 U.S.C. § 101 et seq., including §§ 102, 103, 112 and 171. Accordingly, an actual and justiciable controversy exists between Acuity and Cooper Lighting regarding invalidity of the Patents.

18. A judicial declaration that the claims of the Patents are invalid is necessary and appropriate at this time so that Cooper Lighting can ascertain its rights and duties with respect to its accused activities relating to making, using, selling, and/or offering for sale in the United States certain light fixtures.

PRAYER FOR RELIEF

WHEREFORE, Cooper Lighting respectfully requests that the Court enter judgment in its favor and against Acuity on this Counterclaim as follows:

a. Award compensatory damages to Cooper Lighting according to proof at trial;

b. Grant a permanent injunction enjoining Acuity Lighting and its officers, agents, representatives, assigns, licensees, distributors, employees, related entities, and all those in privity or acting in concert with Acuity Lighting from further infringing, either directly, contributorily, or by way of inducement, the '830 patent;

c. Enter a declaratory judgment that Cooper Lighting is not infringing any valid claim of the Patents.

d. Enter a declaratory judgment that the claims of the Patents are invalid.

e. Award Cooper Lighting the costs of this suit and its attorneys' fees incurred as a result of this action; and

f. Grant such other relief as the Court deems just and proper.

DEMAND FOR JURY TRIAL

Pursuant to Rule 38 of the Federal Rules of Civil Procedure, Cooper Lighting demands a jury trial on all issues so triable in this case.

POTTER ANDERSON & CORROON LLP

By: _____
Philip A. Rovner (# 3215)
Hercules Plaza
P.O. Box 951
Wilmington, DE 19899
(302) 984-6000
provner@potteranderson.com

Attorneys for Defendant and Counterplaintiff Cooper Lighting, Inc.

OF COUNSEL:

David S. Foster
Kevin C. May
LATHAM & WATKINS LLP
233 South Wacker Drive, Suite 5800
Chicago, IL 60606
(312) 876-7700

Dated: August 22, 2008
879564

EXHIBIT A

US006644830B2

(12) **United States Patent**
Lewis et al.

(10) **Patent No.: US 6,644,830 B2**
(45) **Date of Patent: Nov. 11, 2003**

(54) **HIGH OUTPUT LAMP SOFTENER**

(75) Inventors: **Randy Kent Lewis**, Americus, GA (US); **William Theodore Foley, III**, Americus, GA (US)

(73) Assignee: **Cooper Technologies Company**, Houston, TX (US)

(*) Notice: Subject to any disclaimer, the term of this patent is extended or adjusted under 35 U.S.C. 154(b) by 0 days.

(21) Appl. No.: **09/998,213**

(22) Filed: **Dec. 3, 2001**

(65) **Prior Publication Data**

US 2003/0103355 A1 Jun. 5, 2003

(51) **Int. Cl.**[7] **F21S 4/00**
(52) **U.S. Cl.** **362/225**; 362/224; 362/245; 362/327
(58) **Field of Search** 362/260, 223, 362/224, 300, 351, 311, 308, 332, 433, 444, 327, 329, 225, 240, 241, 245

(56) **References Cited**

U.S. PATENT DOCUMENTS

4,939,627 A		7/1990	Ilerst et al.	362/299
5,097,401 A		3/1992	Eppler	362/298
5,128,846 A	*	7/1992	Mills et al.	362/224
5,228,773 A		7/1993	Win	362/334
5,274,536 A		12/1993	Sato	362/338
5,418,699 A	*	5/1995	Tazawa	362/255
5,486,990 A		1/1996	Sejkora	362/309
5,746,502 A		5/1998	Huang	362/223
5,823,656 A		10/1998	Waldmann	362/147
5,865,528 A		2/1999	Compton et al.	362/300
5,967,648 A		10/1999	Barnes, II et al.	362/307
D440,341 S		4/2001	Arumugasaamy	D26/85
6,210,025 B1		4/2001	Schmidt et al.	362/147
6,213,625 B1		4/2001	Leadford et al.	362/331

FOREIGN PATENT DOCUMENTS

GB	400029	* 10/1933	362/224
GB	496979	* 12/1938	362/224

OTHER PUBLICATIONS

PCT Int'l Search Rep, Apr. 24, 2002.
Peerless Lighting Corporation—Mirage Web Page Article http://www.peerless-lighting.com/P40_image.htm, May 31, 2001.
Peerless Lighting Corporation—Mirage Web Page Article http://www.peerless-lighting.com/P40_image.htm, Apr. 3, 2001.

* cited by examiner

Primary Examiner—Y. My Quach-Lee
Assistant Examiner—Peggy A. Neils
(74) *Attorney, Agent, or Firm*—Thomas, Kayden, Horstemeyer & Risley LLP

(57) **ABSTRACT**

A high output lamp softener includes a base and at least one diffuser extending from the base toward an interior of the base and defining a surface configured to encircle a portion of a circumference of a high output lamp.

18 Claims, 12 Drawing Sheets

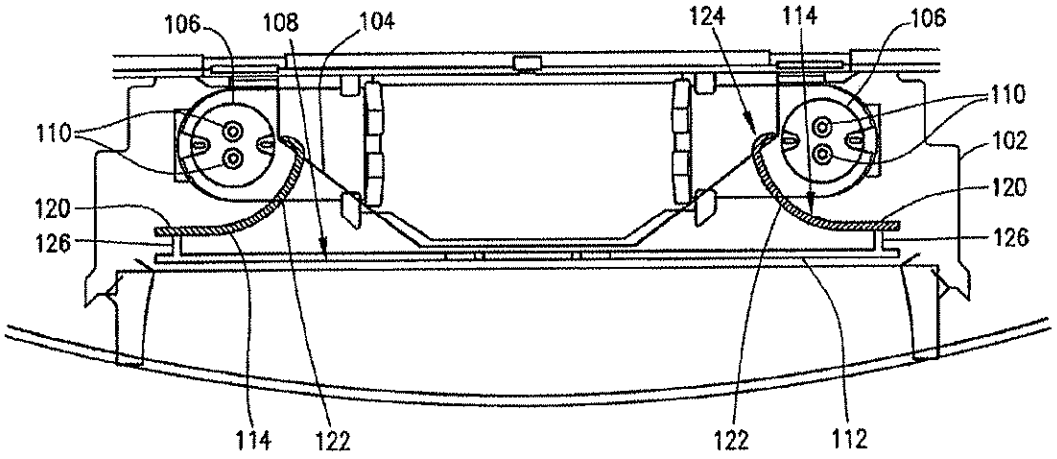

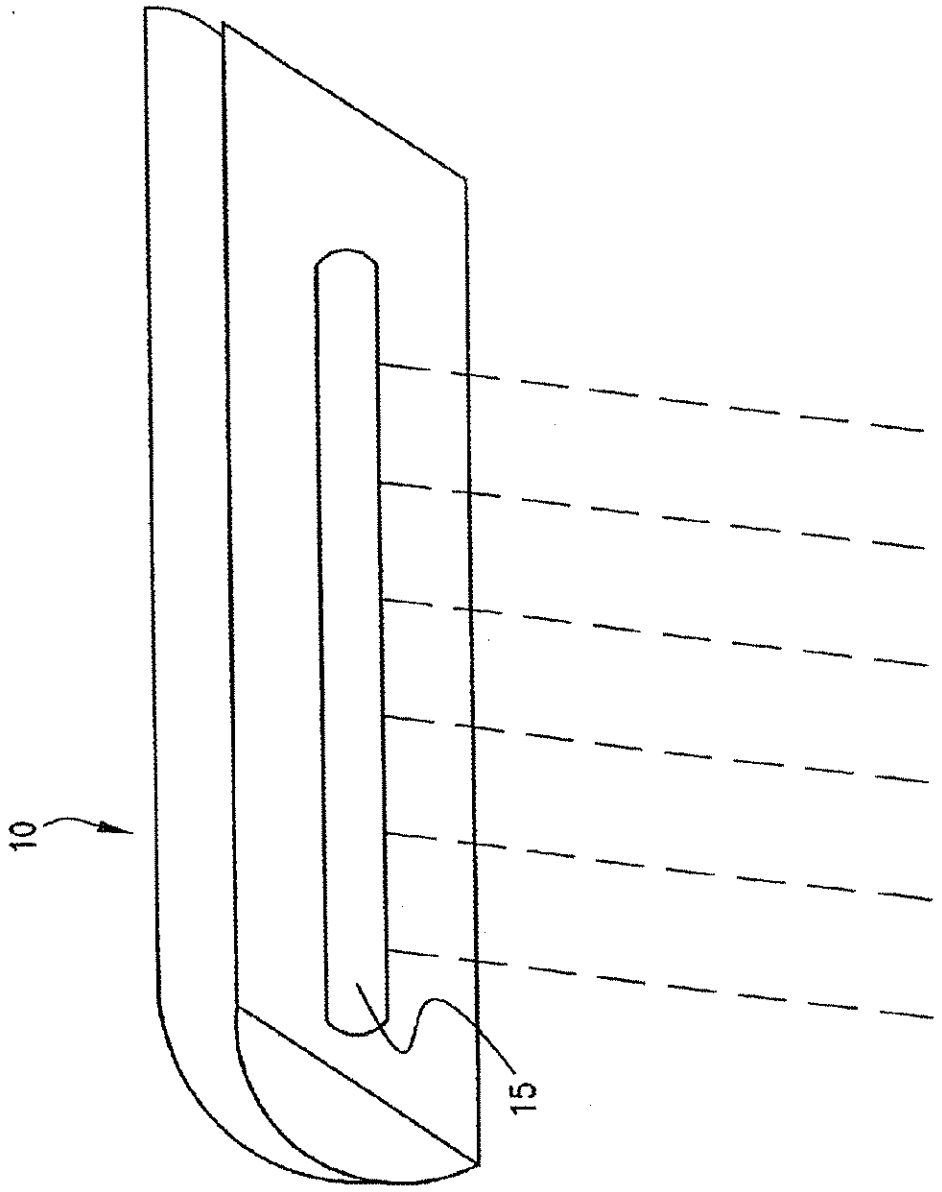

FIG. 1
(PRIOR ART)

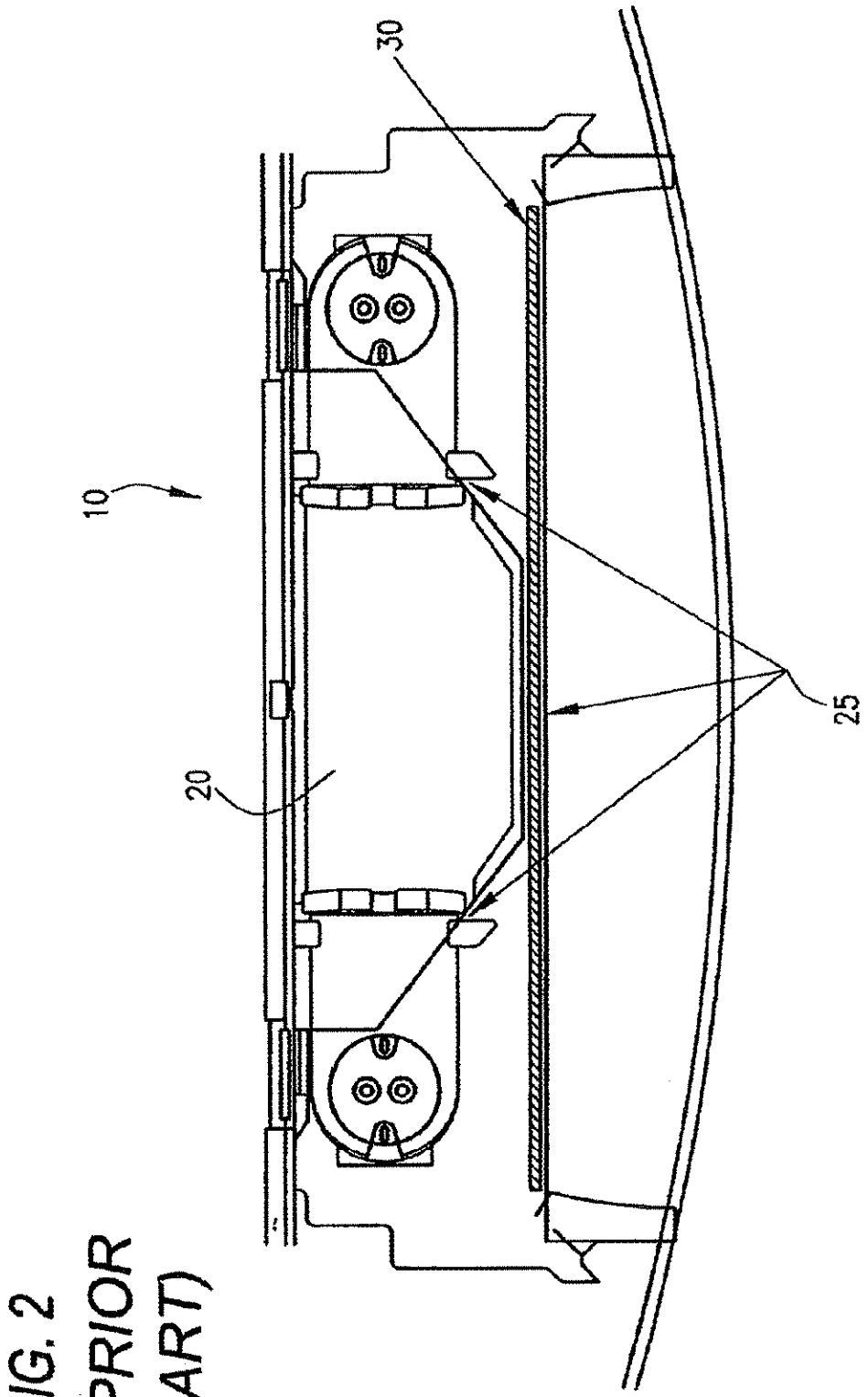

FIG. 2
(PRIOR ART)

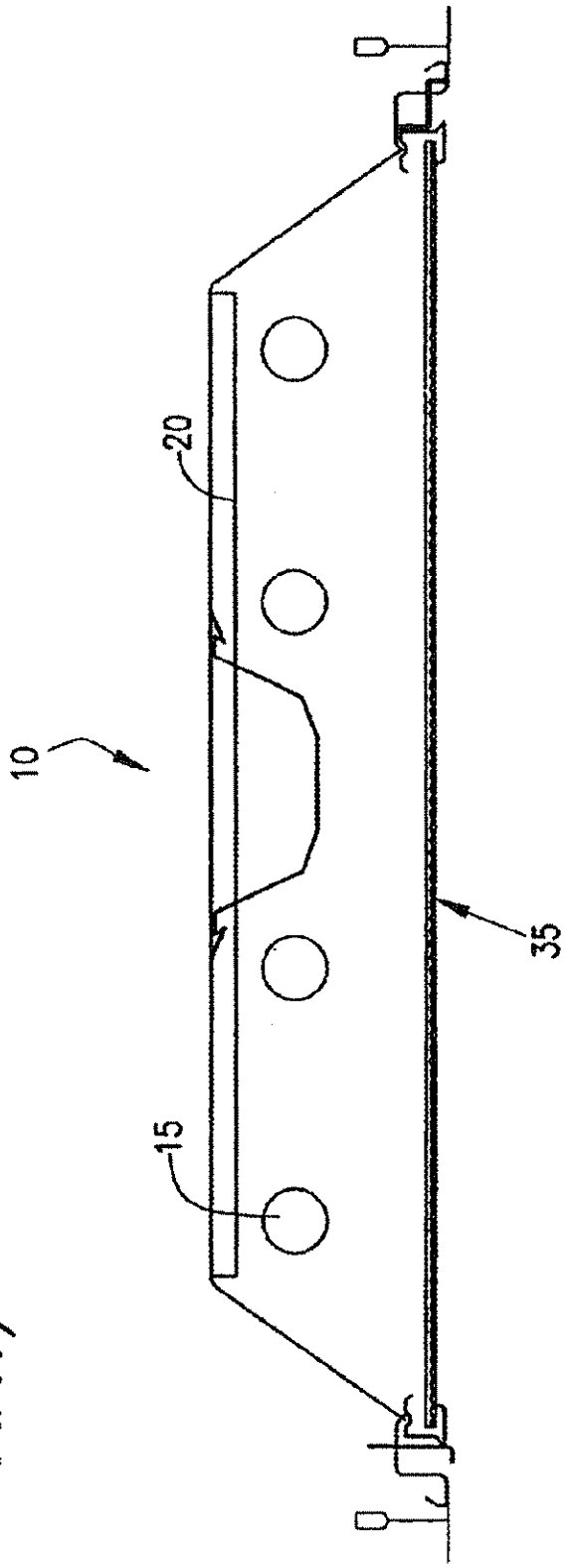

FIG. 3
(PRIOR ART)

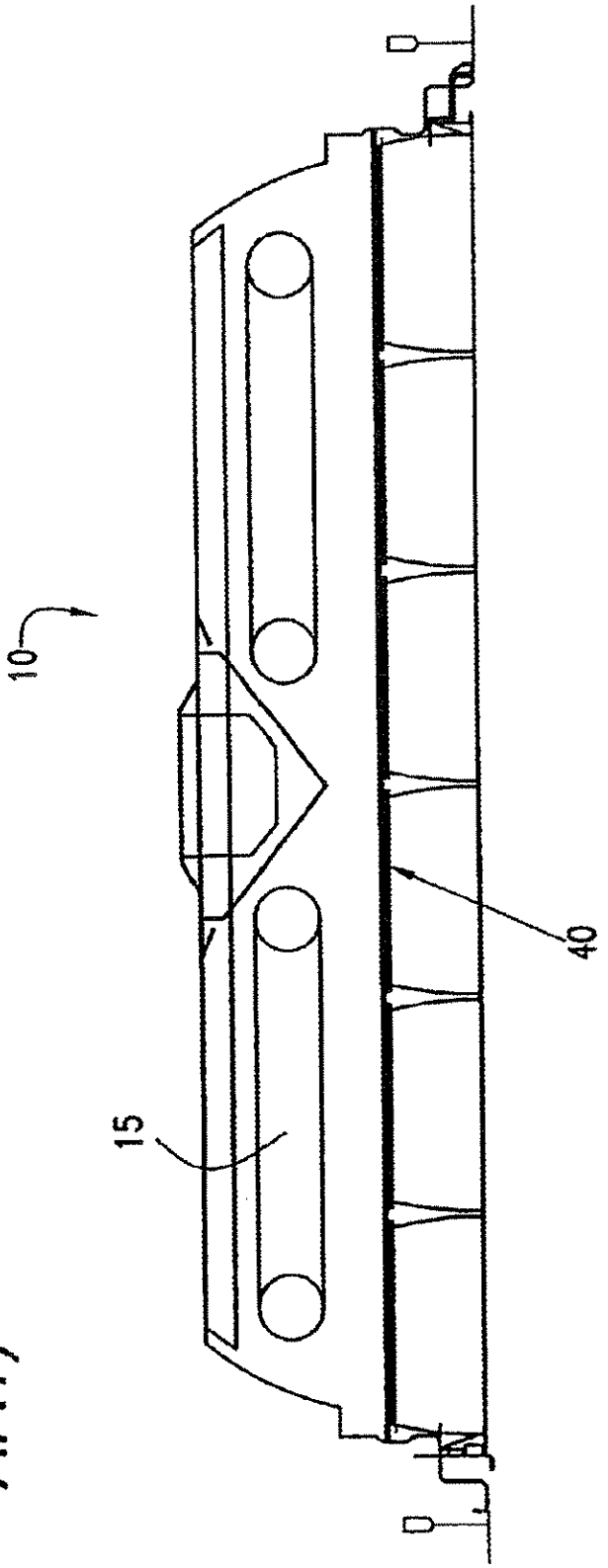

FIG. 4
(PRIOR ART)

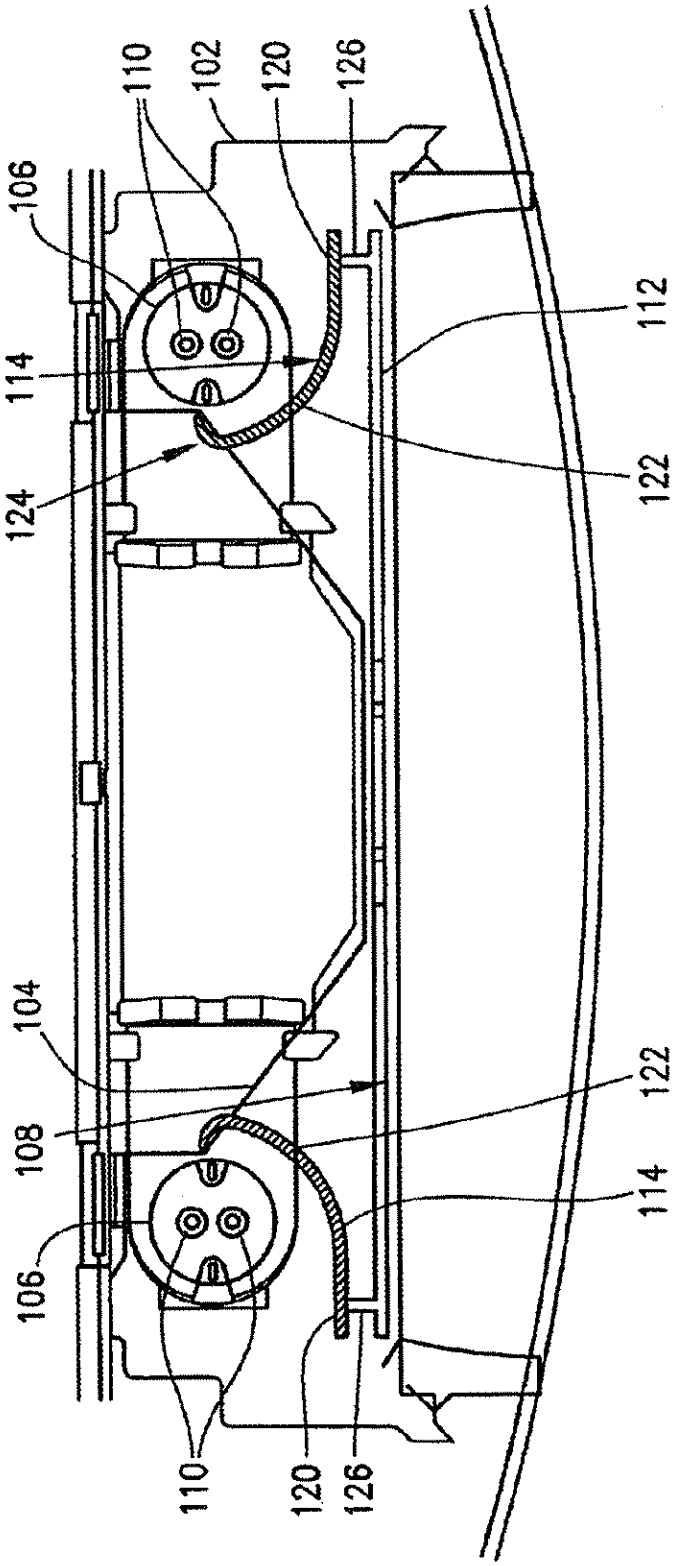
110
102
120
126
106
112
114
122
124
104
122
108
114
106
110
120
126

FIG. 5

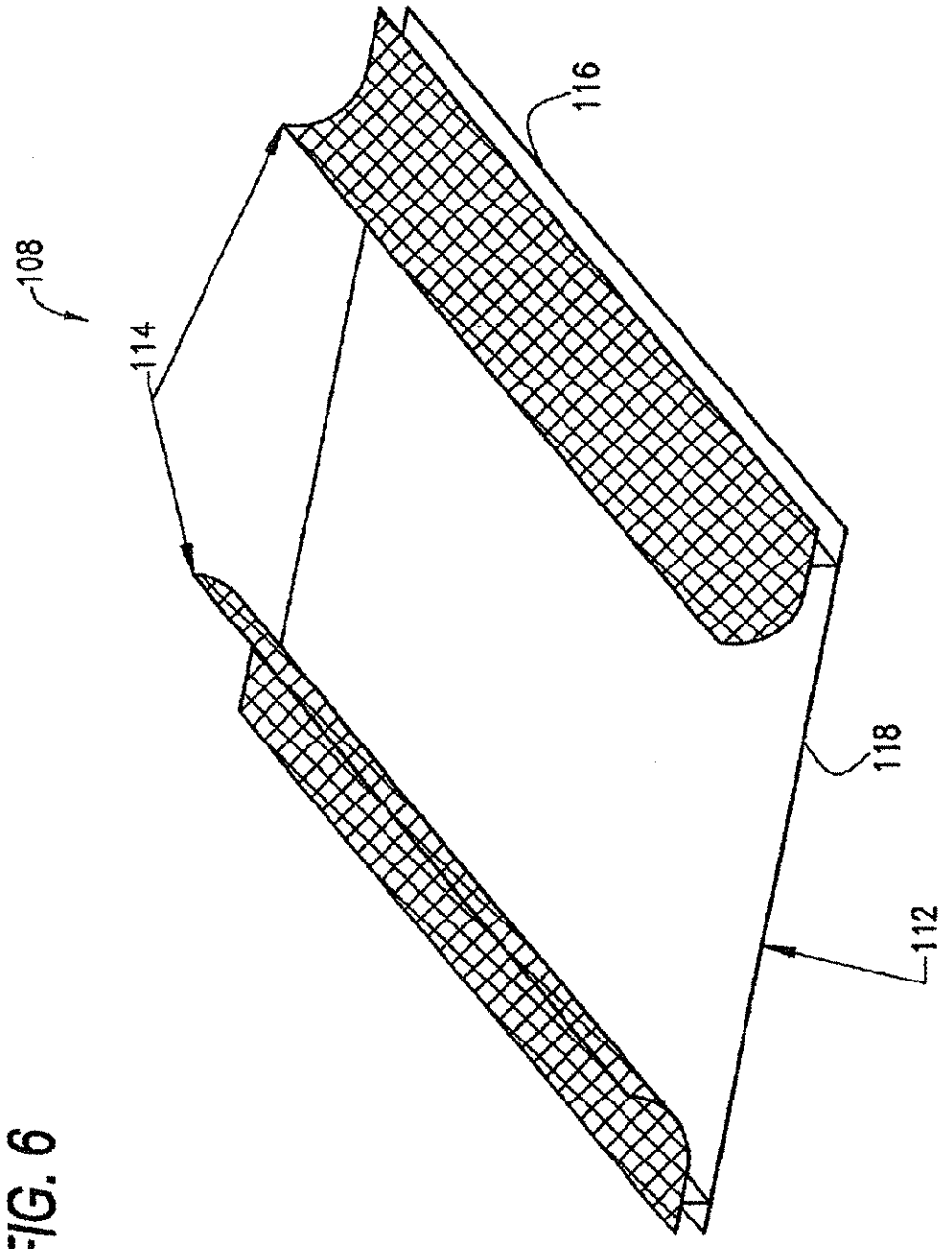

FIG. 6

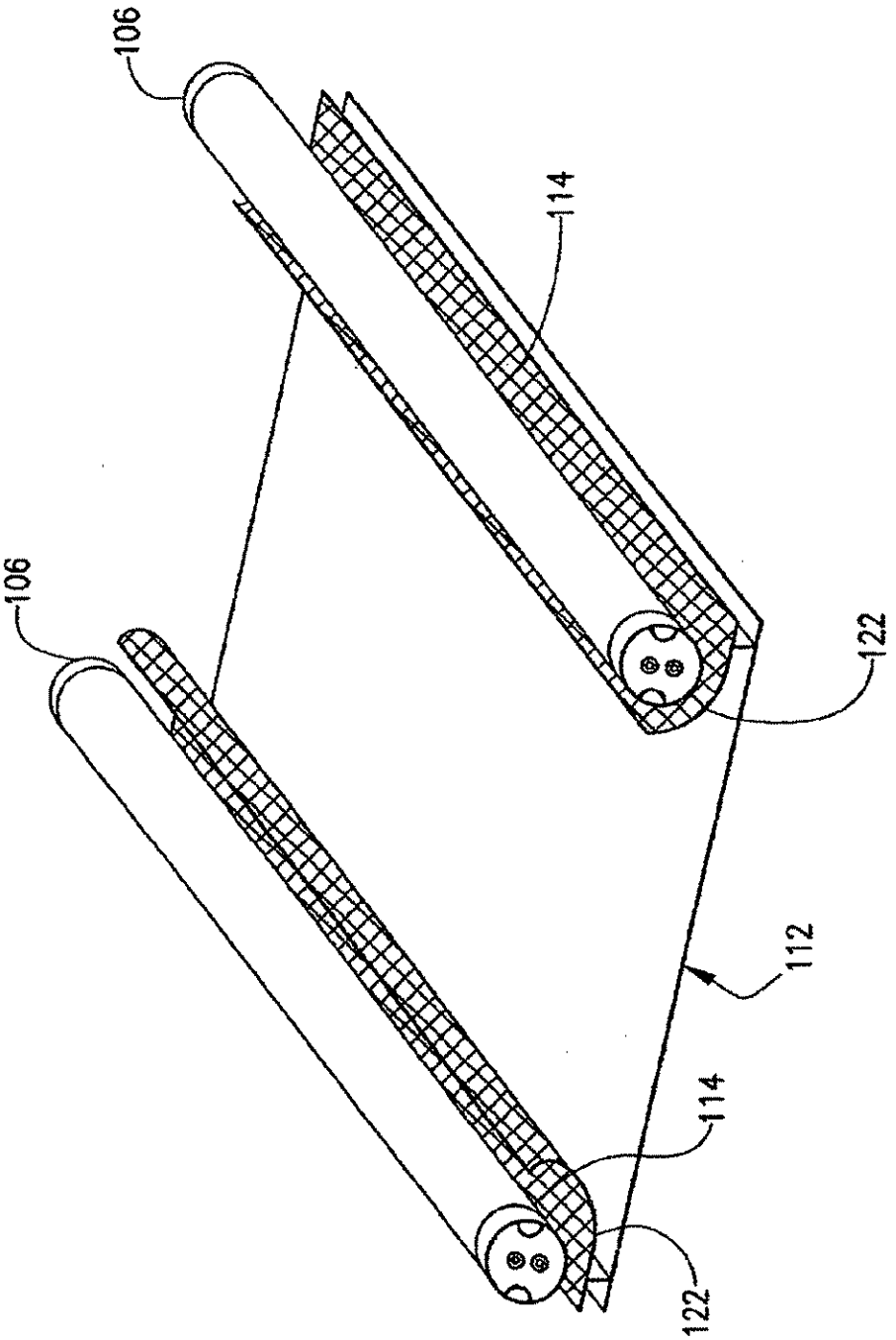

FIG. 7

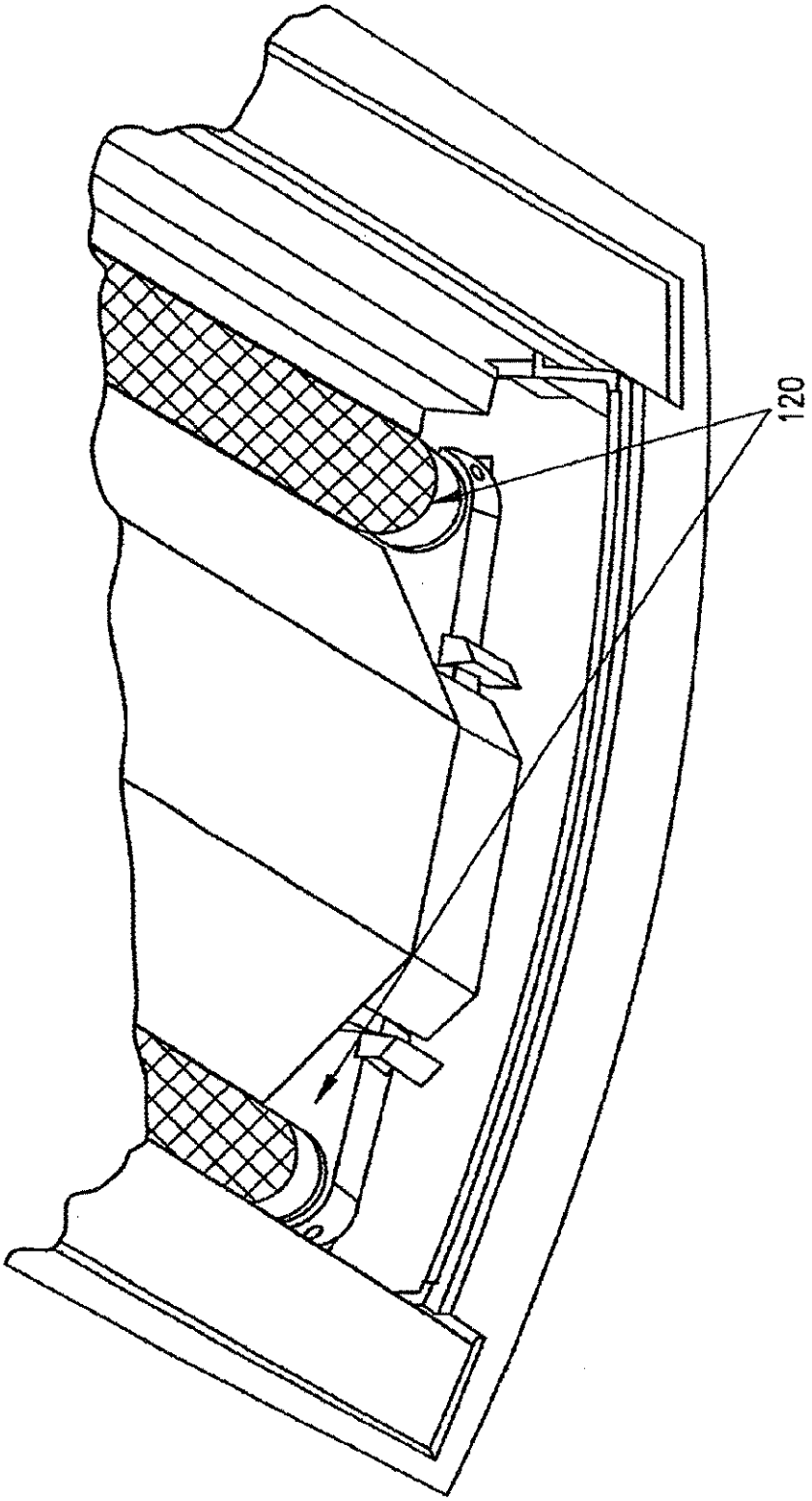

FIG. 8

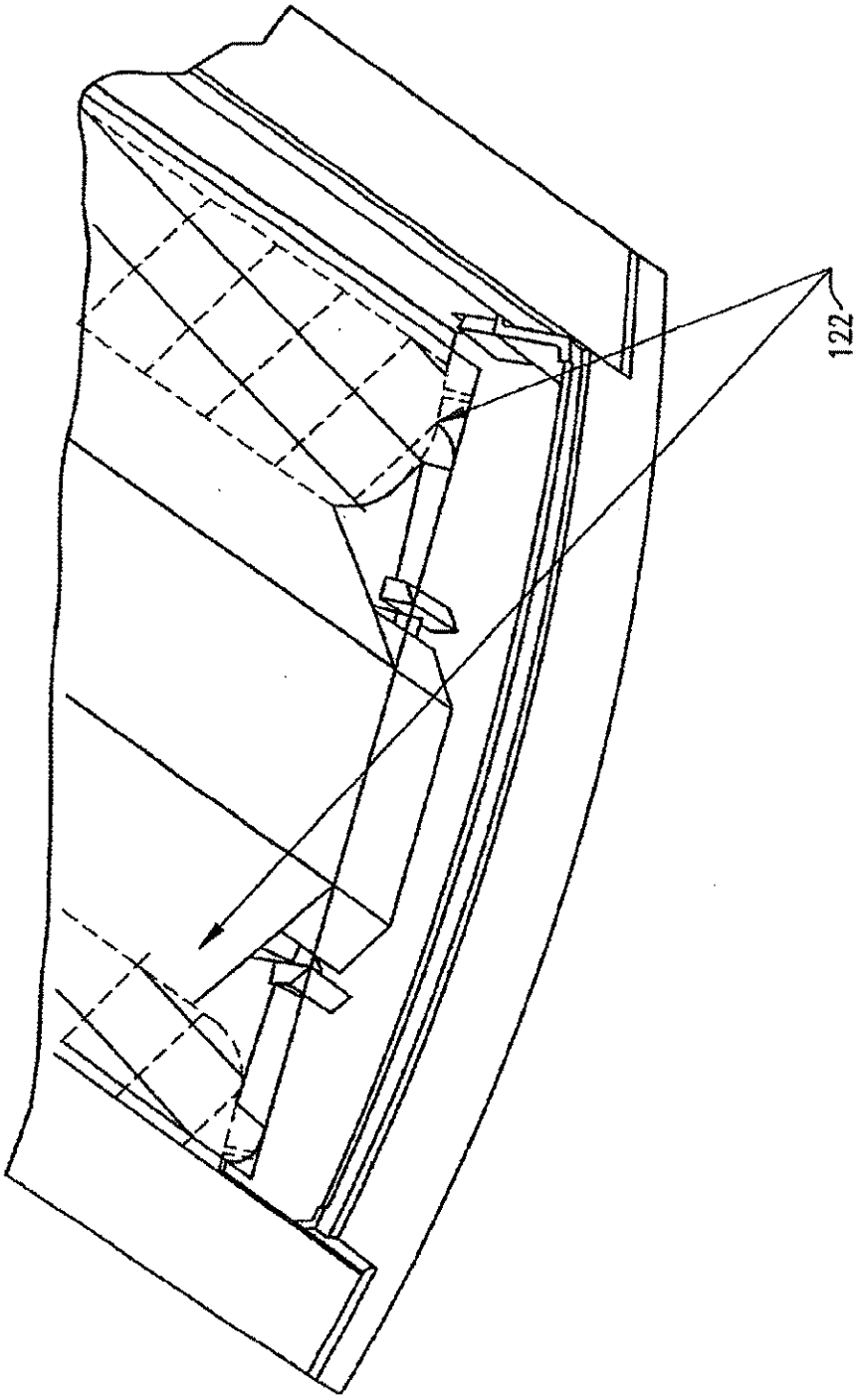

FIG. 9

FIG. 10

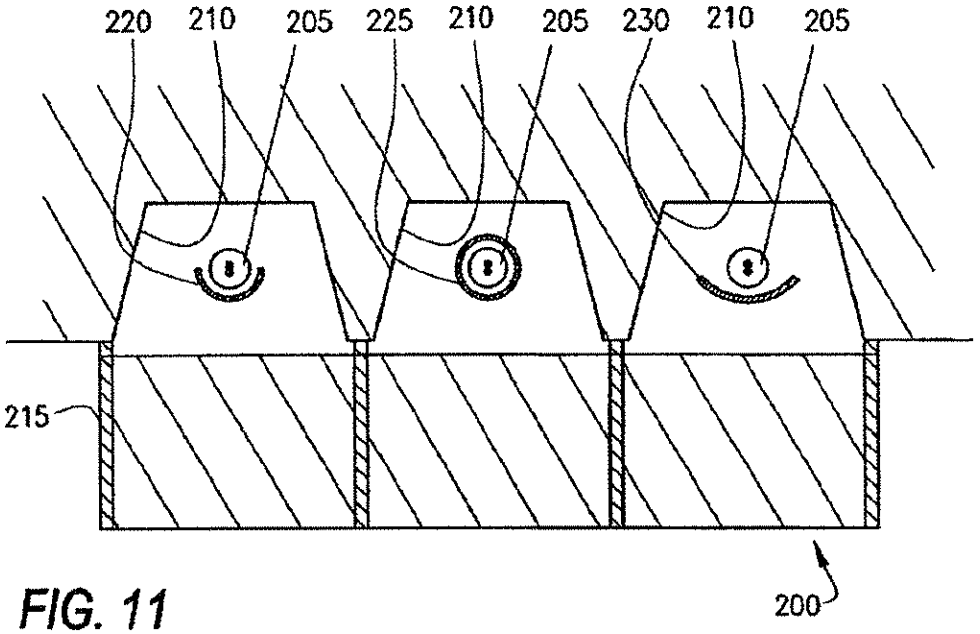
220
210
205
225
210
205
230
210
205
215
200

FIG. 11

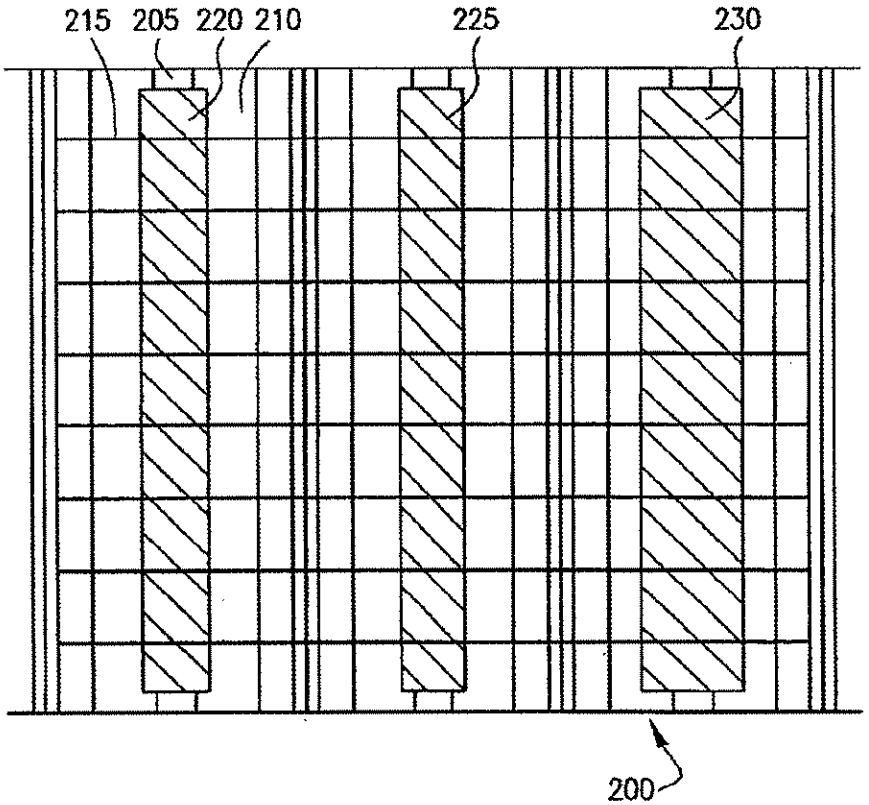
215
205
220
210
225
230
200

FIG. 12

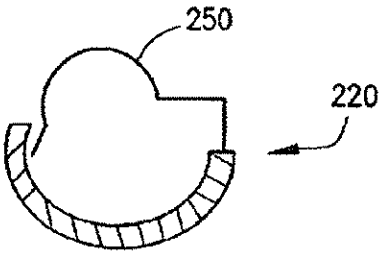

FIG. 13

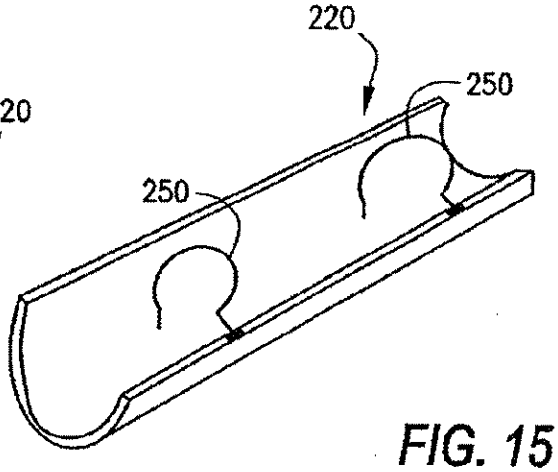

FIG. 14

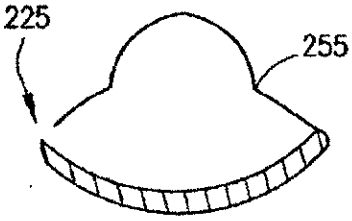

FIG. 15

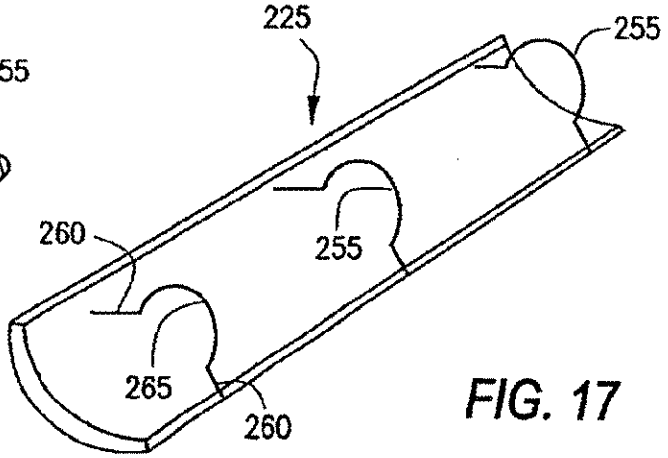

FIG. 16

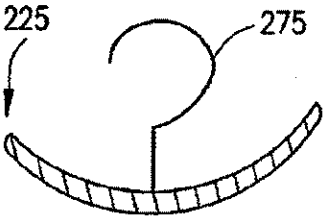

FIG. 17

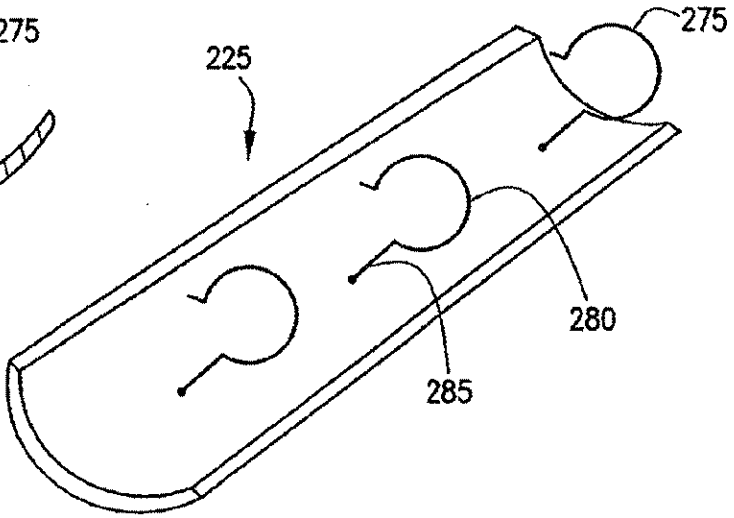

FIG. 19

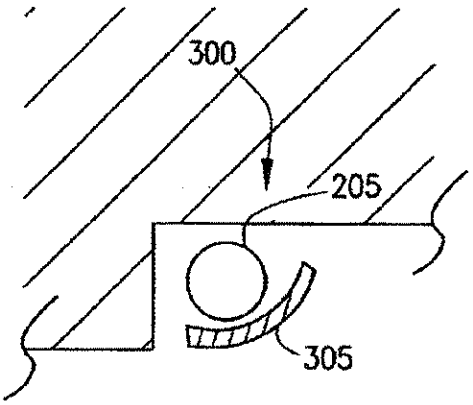

FIG. 20

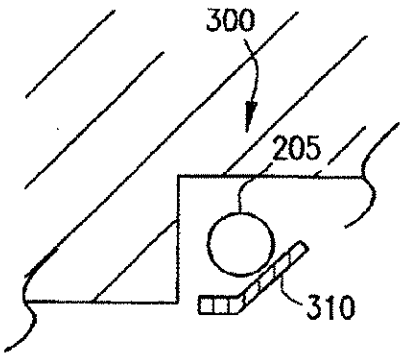

FIG. 18

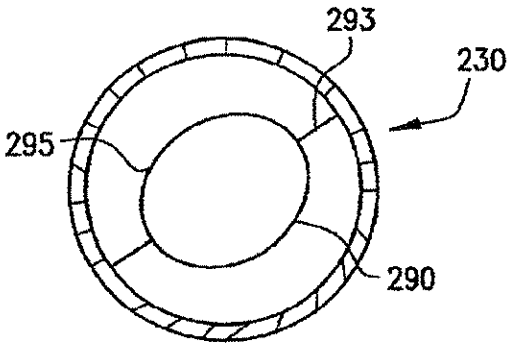

FIG. 21

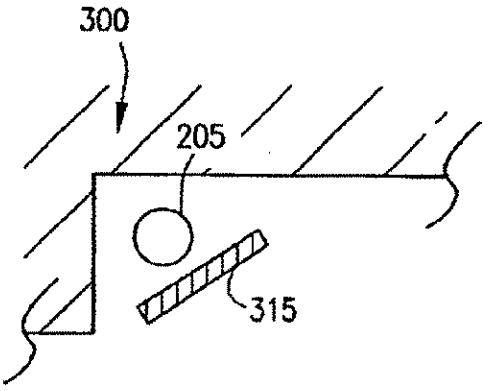

HIGH OUTPUT LAMP SOFTENER

TECHNICAL FIELD

This invention relates to high output fluorescent lamp fixtures, and more particularly to a softener for a high output fluorescent lamp fixture.

BACKGROUND

Referring to FIG. **1**, a conventional high output fluorescent lamp fixture **10** tends to produce maximum illumination immediately below and along the length of the high output fluorescent lamp **15**. This can cause glare while leaving shadows in other areas where illumination is desired. Methods for reducing glare and providing more uniform illumination from a high output fluorescent lamp fixture are well known. For example, referring to FIG. **2**, the conventional high output fluorescent lamp fixture **10** includes a housing **20**, a reflector **25**, one or more high output fluorescent lamps **15**, and a sheet diffuser **30**.

To provide more even illumination, the sheet diffuser **30** disperses direct lighting emanating from the lamp **15** and indirect lighting reflected by the fixture's reflector **25**. The sheet diffuser **30** can have a perforated or ridged surface for increased light dispersion. Referring to FIGS. **3** and **4**, the sheet diffuser may be installed as a lens cover diffuser **35** (FIG. **3**) that is positioned at the bottom of the housing **20** or as an overlay diffuser **40** that is installed inside the lamp fixture **10** (FIG. **4**).

A desire for increased brightness levels has resulted in the development of high output lamps. However, the increased brightness level from these high output lamps increases the potential for discomfort, harsh glare, or shadows. Conventionally, the glare from the high output lamps is minimized by reducing the transmissive properties of the sheet diffuser **30** such that the lamp's brightness level is comparable to that produced by a standard high output fluorescent lamp fixture.

SUMMARY

In one general aspect, a high output lamp softener includes a base and at least one diffuser extending from the base toward an interior of the base and defining a surface configured to encircle a portion of a circumference of a high output lamp.

Implementations of the high output lamp softener may include one or more of the following features. For example, the surface of the diffuser may be configured to be positioned below a portion of the circumference of a high output lamp. The surface of the diffuser may be configured to follow the contour of a high output lamp. The surface of the diffuser may be configured to be a constant distance from a high output lamp when the high output softener is mounted in a lamp fixture comprising a high output lamp. The diffuser may include a pair of diffusers.

The diffuser may include a translucent material. The translucent material may transmit between approximately 60% and 80% of direct light emitted from a high output lamp. The translucent material of the diffuser may reduce the total light level from a high output fluorescent lamp fixture by between approximately 25% to 35% more than that provided by a standard fluorescent lamp fixture. The translucent material may include a polymer and an additive that reduces the transmissivity of light through the diffuser.

The base may include a transparent material. The diffuser may include a curled edge that extends from the surface toward the fluorescent lamp. The base may include a lens cover for a lamp fixture. The high output lamp softener may further include one or both of a high output lamp and a reflector. The base may be configured to be mounted to the lamp fixture and the diffuser may be configured to be mounted to the reflector. The lamp softener may include one or more fasteners for mounting the lamp softener to one or both of the lamp fixture and a high output lamp. The base and the diffuser may be co-extruded integral components.

In another general aspect, a high output lamp softener may include at least one diffuser having a surface that is configured to encircle a portion of a circumference of a high output lamp and to be positioned in close proximity to a high output lamp. The lamp softener reduces the apparent lighting of the high output lamp while maximizing the reflected lighting emanating from the high output lamp.

Implementations of the high output lamp softener may include one or more of the following features. For example, the diffuser may include one or more fasteners that are configured to mount the softener to a lamp fixture. The fastener may include one or more clips that are configured to mount the lamp softener to a high output lamp. The surface of the diffuser may extend from underneath the high output fluorescent lamp and are upwardly toward the sides of the high output lamp fixture. The diffuser may include a pair of diffusers.

The diffuser may include a translucent material. The translucent material of the diffuser may transmit between approximately 60% and 80% of direct light emitted from a high output lamp. The translucent material of the diffuser may reduce the total light level from a high output fluorescent lamp fixture to between approximately 25% and 35% more than that provided by a standard fluorescent lamp fixture. The translucent material may include a polymer and an additive that reduces light transmissivity through the diffuser.

The diffuser may be configured to encircle approximately 180° of the circumference of a lamp, between approximately 90° and 180° of the circumference of a lamp, or approximately 360° of the circumference of a lamp. The diffuser may include a flat surface.

In another general aspect, a lamp fixture includes a housing and a softener. The housing is configured to retain a fluorescent lamp. The softener includes a surface and is mounted adjacent to a fluorescent lamp to reduce the transmissivity of light through the surface. The surface includes a polymer and a filler that reduces the transmissivity of light through the surface.

Implementations of the lamp fixtures may include one or more of the following features. For example, the softener may include a fastener for mounting the softener. The fastener may include a clip for mounting the softener to a fluorescent lamp. The lamp fixture may further include a reflector and/or a lens. The diffuser may be configured to encircle approximately 180° of the circumference of a lamp, between approximately 90° and 180° of the circumference of a lamp, or approximately 360° of the circumference of a lamp. The diffuser may include a flat surface.

In another general aspect, the output of a lamp can be softened by providing a lamp softener that includes a surface that reduces the transmissivity of light through the surface and placing the lamp softener adjacent to the lamp such that the lamp softener encircles at least a portion of the circumference of the lamp. The surface includes a polymer and a filler that reduces the transmissivity of light.

Softening of the output of the lamp may include one or more of the following features. For example, placing the

lamp softener adjacent to the lamp may include mounting the lamp softener to the lamp. The lamp softener and the lamp may be mounted in a lamp fixture. Mounting the lamp softener in the lamp fixture may include mounting the lamp softener to the lamp fixture and/or mounting the lamp softener to the lamp. The softener may include a translucent material and the translucent material may transmit between approximately 60% and 80% of direct light emitted from a high output lamp. The softener may encircle approximately 180° of the circumference of the lamp, between approximately 90° and 180° of the circumference of the lamp, or approximately **360°** of the circumference of the lamp.

The lamp softener provides considerable advantages. For example, the shape of the high output lamp softener works in conjunction with the luminaire's contours to distribute the concentrated brightness of the true source and to create a much softer looking apparent source. The shape also maximizes the reflectance of the luminaire's upper surfaces to eliminate shadows and to provide a more uniform brightness across the face of the luminaire. The high output lamp softener also reduces the harsh glare of high output lamps to more comfortable brightness levels without a significant reduction in the lighting intensity. The high output lamp softener also reduces shadows and provides more even light distribution than that provided by a high output fluorescent lamp fixture with a conventional sheet diffuser. The lamp softeners are advantageously configured and positioned adjacent to the lamp such that they reduce the apparent illumination seen below the lamp while simultaneously allowing the light from the lamp to reflect from the reflective surface of the lamp fixture, including those of the reflector or baffles and the housing. Thus, the softener provides illumination that is a mixture of direct lighting through the softener and light reflected from the reflective surfaces of the fixture.

The lamp softener also advantageously can be used to reduce the inventory of lamp bulbs that must be carried or stored in a large building or facility. For example, high output lamps, such as T-5 high output lamps, can be used throughout a building in both direct and indirect lighting applications. Because the illumination provided by the lamp will be too bright in some applications, a lamp softener can be placed around or adjacent to the lamp to provide a more comfortable level of illumination. Furthermore, because the softener advantageously does not reduce the reflected lighting, the lamp fixture will provide even and comfortable lighting. Because the softener can be optionally used, the maintenance staff of the building or facility can use the same lamp in many applications and then can use the softener in only those applications for which a softened apparent lighting is desired.

The details of one or more implementations are set forth in the accompanying drawings and the description below. Other features and advantages will be apparent from the description, the drawings, and the claims.

DESCRIPTION OF DRAWINGS

FIGS. **1–4** are perspective views of a conventional fluorescent lamp fixture with conventional diffusers.

FIG. **5** is a perspective view of a high output lamp fixture with a high output lamp softener.

FIG. **6** is a perspective view of the high output lamp softener of FIG. **5**.

FIG. **7** is a perspective view of the high output lamp softener of FIG. **5** and a high output fluorescent lamp.

FIG. **8** is a perspective view of the fluorescent lamp fixture of FIGS. **1–4**.

FIG. **9** is a perspective view of the high output lamp fixture of FIG. **5**.

FIGS. **10** and **11** are end and bottom views of a lamp fixture having lamp softeners.

FIGS. **12–18** are end and perspective views of the softeners of FIGS. **10** and **11** illustrating mounting clips to mount the softeners to lamps.

FIGS. **19–21** are end views of comer lamp fixtures and softeners.

Like reference symbols in the various drawings indicate like elements.

DETAILED DESCRIPTION

Referring to FIGS. **5–7**, a high output lamp fixture **100** includes a housing **102**, a reflector **104**, one or more high output fluorescent lamps **106**, and a high output lamp softener **108**. The reflector **104** is positioned inside the housing **102** adjacent to, and above or behind, the lamps **106** to form separate compartments for each of the high output fluorescent lamps **106**.

The housing **102** can be any housing that is configured to retain a lamp, whether the fixture is recessed, hanging, or mounted in another manner.

The reflectors **104** reflect light from the lamps **106** and the arrangement of the reflectors affects the distribution of the light in the room in which the fixture **100** is placed. The reflectors also capture and reflect light that is not otherwise directed to the area to be illuminated. As such, the surface of the reflector is important in reflecting light. Thus, the more reflective the surface, the more likely light will be captured and reflected. For example, the reflectors **104** include sections or reflective surfaces that are behind the lamps and which reflect light down that otherwise would be lost because it is directed at an area that is not important for illumination. Similarly, the reflectors include sections or reflective surfaces that are adjacent to the inside portion of the lamp and which reflect light that otherwise would not be directed down to the area to be illuminated. The reflectors optionally also can include sections or reflective surfaces that are adjacent to the outside portion of the lamp and which also reflect light that would otherwise not be directed down to the areas to be illuminated. The reflectors **104** also can be curved to provide a semi-circular enclosure around a part of the circumference of the lamp.

The high output fluorescent lamps **106** include pin contacts **110** at each end for electrical and mechanical connection to the lamp fixture sockets (not shown). The high output lamp softener **108** does not interfere with the mounting of the lamps **106** in the lamp fixture **100** and, as such, the lamps are installed in the fixture using conventional techniques. The lamps **106** can be of any length and the softener **108** can be fabricated to be of a similar length to match the lamp and the fixture **100**.

The high output lamp softener **108** includes a flat base **112** and shaped lamp diffusers **114**. The base **112** has a rectangular shape with long edges **116** and wide edges **118** approximately aligned with the bottom of the housing **102**. Because the base **112** is positioned below the shaped diffusers **114**, a person below the lamp softener **108** looking up at the lamp fixture will not see the diffusers. Instead, the person will see a light source that provides a well-distributed source of light across the base **112** without the visual distractions that could be caused by the variations in shape that result from using the shaped diffusers **114**.

The shaped diffuser **114** has a lower, flat portion **120** and a curved portion **122** that extends from the flat portion and

arcs upward and toward the center of the fixture **100**. The curved portion **122** has a curvature that generally follows the curvature of the lamp **106** and terminates at a tip **124**. The tip **124** can be configured for mounting the softener **108** to the reflector **104**. For example, the tip **124** of the curved portion **122** shown in FIG. **5** is bent backward for contact with the reflector surface. The reflector surface may include a slot through the reflector in which the tip **124** is inserted, one more spring clips in which the tip is inserted, or a plate that extends from the reflector to form a channel in which the tip is inserted. In general, the tip **124** can be mounted to the reflector **104** in any manner that ensures a secure mounting of the tip to the reflector. Of course, the softener **108** can be mounted to the fixture **100** in any variety of manners. For example, the base **112** of the high output lamp softener can be mounted to the reflector **104** by a screw (not shown). In another implementation, the base can include one or more mounting tabs that are inserted into corresponding mounting holes in the reflector. In a further implementation, the tip **124** of the shaped diffuser **114** can be secured to the reflector **104** by a screw or other mounting means.

A connecting ridge **126** extends from the flat portion **120** at a position near the long edge **116** of the base **112** and integrally joins the base to attach the base **112** to the shaped diffuser **114**. The length of the connecting ridge **126** can be varied depending upon the application. For example, if the reflector extends down a relatively large distance, the connecting ridge **126** can be a relatively long length and if the reflector extends down a relatively short distance, the connecting ridge can be a relatively short length. The connecting ridge **126** can be positioned at any position along the length of the base **112** and extend to any position along either the flat portion **120** or the curved portion **122**. For example, the connecting ridge can extend from the outer most point along the long edge **116** and connect to the outermost point of the connecting ridge **126**. The connecting ridge **126** also can extend from a point more to the center of the base **112** and connect any point of the diffuser **114**.

Referring specifically to FIG. **7**, the curved portion **122** maintains a relatively constant distance between the surface of the shaped diffuser **114** and the surface perimeter of the high output fluorescent lamp **106**. A benefit of this feature is that the apparent illumination through the diffuser will be relatively constant across its surface. Since the shaped diffuser **114** encircles a portion of the fluorescent lamp **106**, the diffuser **114** is wider than the fluorescent lamp **106**. Thus, the apparent light source through the diffuser **114** is wider. However, the shaped diffuser **114** is still within close proximity to the lamp **106** in order to minimize the absorption of reflected light from the fixture. In its proper position the shaped diffuser **114** reduces direct lighting from the fluorescent lamp to a comfortable level while minimizing the reduction in reflected light from the fixture relative to a lamp fixture having an overlay, a lens, or a sheet diffuser. The curvature of the curved portion **122** can be varied to tailor the apparent illumination. For example, if the configuration of the reflector surface causes dim spots or regions of lower intensity of the illumination, the curvature can be brought closer at that region.

The base **112** and the shaped diffuser **114** are manufactured as one integral component by, for example, co-extrusion, injection molding, compression molding, extrusion, or casting. Of course, the base **112** and the shaped diffuser **114** can be formed as separate components, using any of the methods described above, that are then fixed together. For example, the base **112** can be separately formed and two separate diffusers **114** can be separately formed, and then the separate parts adhered together with an adhesive, connected with clips, or attached together using another mounting or attachment device.

The base **112** is made from a clear plastic that is nearly 100% light transmissive. In other implementations, the base **112** may be made from clear acrylic, or polycarbonate materials. In a further implementation, the base may be translucent or partly light transmissive. The base **112** also may have a surface pattern such as squares, circles, diamonds, or ridges to increase light dispersion.

The shaped lamp diffuser **114** is made from a translucent extruded plastic that is impregnated with a milky-white additive, or any other additive or filler, such as an opaque filler, that reduces the light transmission through the plastic. In other implementations, the shaped lamp diffuser **114** can be made from a translucent material such as acrylic or polycarbonate with or without an additive or filler, such as an opaque filler, that reduces the light transmissivity of the diffuser. The transmissive properties of the lamp diffuser **114** allow between approximately 50% and 90%, more particularly between approximately 60% and 80%, and even more particularly approximately 70% of the total light to be transmitted from the lamp **106**. The transmissive properties of the shaped diffuser **114** reduce the output of the high output lamp to a level of 25% to 35% more than the light provided by a standard fluorescent lamp. In another implementation, the transmissive properties of the shaped diffuser reduce the output of the high output lamp to the same level of light provided by a standard fluorescent lamp.

FIGS. **8** and **9** show the contrast in the resulting apparent light from the softener **114** in comparison to a lamp fixture without the softener or a diffuser. For example, referring to FIG. **8**, the apparent light source **120** from a lamp fixture without a diffuser is shown by the hatched area. Essentially, the apparent light source is confined to the surface of the high output fluorescent lamp. In contrast, referring to FIG. **9**, the apparent light source **122** from a lamp fixture with the shaped diffuser **114** is represented by the hatched area. The configuration of the shaped diffuser causes the apparent light source to be much wider by appearing to emanate from the surface of the shaped diffuser.

The softeners and diffusers described herein can be configured as a shaped lamp softener or diffuser that mounts to the lamp or around the lamp. Referring to FIGS. **10** and **11**, a lamp fixture **200** includes one or more lamps **205**, a housing **210**, and a reflector **215**. The housing **210** has surfaces that function as reflective surfaces to illuminate the space below the lamp fixture **200**. The reflector **215** can be, for example, configured as a reflective baffle arrangement with baffles at perpendicular angles to one another. The baffles reflect light from the lamps to provide illumination below the lamp fixture **200**. The reflector **215** optionally can be used with or replaced by a lens (not shown) below the lamp fixture **200**.

The lamp fixture also includes one or more lamp softeners. As illustrated in FIGS. **10** and **11**, the lamp softeners can have a variety of configurations. In general, the lamp softeners are configured and positioned adjacent to the lamp such that they reduce the apparent illumination seen below the lamp while simultaneously allowing the light from the lamp to reflect from the reflective surface of the lamp fixture, including those of the reflector or baffles and the housing. The softener can include a fastener to mount the softener to the lamp, any part of the lamp fixture, or to another surface. Thus, the softener provides illumination that is a mixture of direct lighting through the softener and light reflected from

the reflective surfaces of the fixture. In general, the lamp softeners are not placed so far from the lamp that they cause the illumination below the lamp fixture **200** to be entirely from the lamp softener and not reflected off of any of the reflective surfaces of the lamp fixture. For example, a lamp softener **220** encircles approximately one half of the circumference of the lamp **205**. The softener **220** is positioned such that the output from the lamp from half of the circumference of the lamp passes through the softener and the other half of the output of the circumference of the lamp is reflected off of surfaces of the housing **210** encircling or surrounding part of the lamp **205**. In this manner, the apparent lighting from the lamp is spread over a wider area and, if the lamp is a high output lamp, the apparent lighting is not uncomfortably bright.

A lamp softener **225** is placed around the lamp **205** and encircles the complete circumference of the lamp. In this manner, the output from the entirety of the lamp passes through the softener and then part of that output reflects off of the reflective surfaces of the housing **210**. In this manner, the apparent lighting from the lamp is spread over a wider area and, if the lamp is a high output lamp, the apparent lighting is not uncomfortably bright.

A lamp softener **230** encircles approximately two thirds of the circumference of the lamp **205** and is closest to the lamp below the lamp and is further away from the lamp at the lamp's sides. The output from the lamp from part of the circumference of the lamp passes through the softener and the other portion of the output of the circumference of the lamp is reflected off of surfaces of the housing **210** encircling the lamp **205**. In this manner, the apparent lighting from the lamp is spread over a wider area and, if the lamp is a high output lamp, the apparent lighting is not uncomfortably bright.

The lamp softeners **220, 225, 230** can be mounted to one or more of the lamp **205**, the housing **210**, and/or the baffles **215** using any type of fastener. For example, referring to FIGS. **12** and **13** the softener **220** includes one or more mounting fasteners or clips **250** extending from the softener. The clips can be integral with the softener or mounted to the softener. The clips **250** are configured to fit snugly around the lamp **205** by pressing the clip against the lamp such that it expands to receive the lamp and then contracts around the circumference of the lamp. The clips **250** can be configured to have a flared opening to ease the placement of the clips around the lamp. With the clips **250**, the softener **220** can be mounted on an installed lamp or mounted to a lamp prior to installation in the fixture.

Referring to FIGS. **14** and **15**, the softener **225** includes fasteners or clips **255** that are used to mount the softener **225** to a lamp. The clips extend from the edge of the softener and mount around the lamp to retain the softener to the lamp. The clips **255** include a pair of arms **260** and a rounded portion **265**. The rounded portion **265** encircles the lamp **205** and one or more of the arms **260** attach to and extend from the softener. If one arm **260** extends from the softener and the other arm does not, the clip **255** can be flexibly bent to allow placement over an installed lamp. If both arms **260** attach to and extend from the softener, the softener must be mounted to the lamp prior to installation of the lamp in the fixture. The clips **255** can be integral with the softener or mounted to the softener.

Referring to FIGS. **16** and **17**, the softener **225** includes fasteners or clips **275** that extend from a mid-region of the softener. The clips include a rounded portion **280** that is configured to encircle the lamp **205** and a base portion **285** that extends from the softener to the rounded portion. The clips can be integral with the softener or mounted to the softener. For example, the base portion **285** can be mounted to the softener when it is formed or it can be affixed later.

Referring to FIG. **18**, the softener **230** includes one or more fasteners or clips **290** that are mounted within an inner channel of the softener. The clip **290** includes one or more arms **293** and a ring **295**. The ring has an inner diameter that is greater than the outer diameter of the lamp. In this manner, the lamp is inserted through the rings and the lamp then is installed in the lamp fixture **200**.

The softeners **220, 225, 230** are fabricated by, for example, extrusion, molding or any other plastic fabrication technique, from a polymer to which an additive or filler, such as an opaque filler, has been added to reduce the light transmissivity of the resulting lamp softener. One or more colored filler also can be used to provide tinting effects to the lighting or otherwise color the lighting. The softeners also can be made from a translucent material such as acrylic or polycarbonate with or without an additive or filler, such as an opaque filler, that reduces the light transmissivity of the softener. The transmissive properties of the lamp softener allow between approximately 50% and 90%, more particularly between approximately 60% and 80%, and even more particularly approximately 70% of the total light to be transmitted from the lamp **205**. The transmissive properties of the softener reduce the output of a high output lamp to a level of 25% to 35% more than the light provided by a standard fluorescent lamp. In another implementation, the transmissive properties of the softener can be configured to reduce the output of the high output lamp to the same level of light provided by a standard fluorescent lamp.

A number of implementations of a high output lamp softener have been described. For example, referring to FIGS. **19–21**, the lamp **200** can be installed in a corner lamp fixture **300** and a softener placed adjacent to the lamp to soften the apparent lighting. Although the softener can be a curved softener **305** (FIG. **19**), the softener also can be a generally planer softener **310** that includes an angle between two segments (FIG. **20**) or is simply formed from one flat sheet (FIG. **21**) and placed adjacent to the lamp to affect the lighting directly emanating from the lamp but yet provide reflected lighting from the fixtures reflective surfaces. Nonetheless, it will be understood that various modifications may be made. Accordingly, other implementations are within the scope of the following claims.

What is claimed is:

1. A lighting system, comprising:

a pair of elongated lamps arranged substantially parallel to each other in a plane;

a reflector, arranged between the lamps and extending through the plane, for reflecting light from the lamps;

a pair of diffusers, each diffuser extending from the reflector and below the plane, for distributing light from the lamps across the reflector.

2. The lighting system recited in claim **1**, further comprising a translucent base arranged below the reflector and the diffusers for receiving light from the reflector and the diffusers.

3. The lighting system recited in claim **2**, wherein each diffuser extends from the reflector to an edge of the base.

4. The lighting system recited in claim **3**, wherein each diffuser is secured to an edge of the base.

5. The lighting system recited in claim **4**, wherein the base further comprises a pair of connecting ridges, each connecting ridge arranged on an opposite edge of the base for securing to the corresponding diffuser.

6. The lighting system recited in claim **2**, wherein at least a portion of top surface of the base abuts a bottom surface of the reflector.

7. The lighting system recited in claim **6** wherein the bottom surface of the reflector has a shape corresponding to a shape of the abutting surface of the base.

8. The lighting system recited in claim **7** wherein the bottom surface of the reflector is substantially flat.

9. The lighting system recited in claim **1** wherein each diffuser transmits between approximately 60% and 80% of incident light.

10. A lighting system, comprising:

a pair of elongated lamps arranged substantially parallel to each other in a plane;

reflector means, arranged between the lamps and extending through the plane, for reflecting light from the lamps;

curved diffuser means, extending from each side of the reflector, for distributing light from the lamps across the reflector.

11. The lighting system recited in claim **10** further comprising translucent means, arranged below the reflector means and the diffusers means, for receiving light from the reflector and its diffuser.

12. The lighting system recited in claim **10** further comprising reflector connecting means for securing the diffuser means to the reflector means.

13. The lighting system recited in claim **10** further comprising translucent connecting means for securing the diffuser means to the translucent means.

14. The lighting system recited in claim **12** further comprising translucent connecting means for securing the diffuser means to the translucent means.

15. The lighting system recited in claim **11** wherein the reflector means abuts a top surface of the translucent means.

16. The lighting system recited in claim **14** wherein the reflector means abuts a top surface of the translucent means.

17. The lighting system recited in claim **14** wherein the diffuser means transmits between approximately 60% and 80% of incident light.

18. The lighting system recited in claim **16** wherein the diffuser means transmits between approximately 60% and 80% of incident light.

* * * * *