IN THE UNITED STATES DISTRICT COURT
FOR THE DISTRICT OF DELAWARE

ACUITY BRANDS, INC. and ACUITY BRANDS LIGHTING, INC.,	)	
Plaintiff,	)	C.A. No. 07-444-***
v.	)	
COOPER INDUSTRIES, INC. and COOPER LIGHTING, INC.,	)	
Defendants.	)	

DECLARATION OF KEITH D. HALL

OF COUNSEL:

David S. Foster
Kevin C. May
LATHAM & WATKINS, LLP
233 South Wacker Drive, Suite 5800
Chicago, IL 60606
(312) 876-7700

Dated: September 13, 2007

Philip A. Rovner (# 3215)
POTTER ANDERSON & CORROON LLP
Hercules Plaza
P.O. Box 951
Wilmington, DE 19801
(302) 984-6000
provner@potteranderson.com

Attorneys for Defendants Cooper Industries, Inc. and Cooper Lighting, Inc.

IN THE UNITED STATES DISTRICT COURT
FOR THE DISTRICT OF DELAWARE

ACUITY BRANDS, INC. and ACUITY BRANDS LIGHTING, INC.,	)	
Plaintiffs,	)	
v.	)	C.A. No. 1:07-cv-444 Hon. Mary Pat Thynge
COOPER INDUSTRIES, INC. and COOPER LIGHTING, INC.,	)	
Defendants.	)	

DECLARATION OF KEITH D. HALL

I, Keith D. Hall, under penalty of perjury do hereby depose and declare as follows:

1. I am the Director of Marketing and Product Development for Fluorescent Products at Cooper Lighting, Inc. ("Cooper Lighting"). Cooper Lighting is a leading provider of innovative, high quality lighting fixtures and related products. I have been with Cooper Lighting for eight years, and am currently responsible for all marketing and new product development for our commercial fluorescent lighting fixtures. The matters set forth herein are based on personal knowledge or consultation with company records.

2. Cooper Lighting is headquartered in the Atlanta suburbs at 1121 Highway 74 South, Peachtree City, Georgia. Cooper Lighting runs its corporate, administrative, marketing, sales, customer service and new product development operations out of its Peachtree City, Georgia headquarters. In addition to its Peachtree City headquarters, Cooper Lighting also has a manufacturing plant in Americus, Georgia. Cooper Lighting has no facilities or operations in Delaware, and has no employees residing in Delaware.

3. I understand that this lawsuit involves Cooper Lighting's various recessed fluorescent light fixture models that are sold under the name *"accord™."* The *"accord™"* light

fixtures are manufactured at Cooper Lighting's Americus, Georgia manufacturing plant. No aspect of the design, development or manufacture of the *"accord™"* light fixtures occurred in Delaware.

4. With the exception of certain sales people in the field, every Cooper Lighting employee that has responsibility of any kind for engineering, manufacturing, marketing and/or sales of the *"accord™"* light fixtures in the U.S. is located at our Peachtree City, Georgia headquarters or our Americus, Georgia manufacturing plant. Similarly, Cooper Lighting's documents (other than limited documents in the possession of certain sales people in the field) relating to the *"accord™"* light fixtures are located at our Peachtree City, Georgia headquarters or our Americus, Georgia manufacturing plant. To my knowledge, no such documents are located in Delaware.

5. In addition to Cooper Lighting and its employees, I am aware of at least two other individuals who reside in the Atlanta area who may be significant witnesses in this case. Richard Gloster, who resides in the Atlanta suburb of Fayetteville, Georgia, used to be employed by Flexillume Canada Ltd. During the 1980s, Flexillume manufactured and sold a light fixture pictured in the drawings attached hereto at Exhibit A, which I understand may be pertinent to this litigation, including because it has "obtuse angle" end faces and a lens positioned "such that substantially all of the light emitted by the light source passes through the lens." To my knowledge, Cooper Lighting is aware of no other individual knowledgeable about this Flexillume prior art.

6. Former Cooper Lighting employee Jamey Vaughan resides in the Atlanta suburb of Senoia, Georgia. Mr. Vaughan was the managing engineer responsible for the *"accord™"*

light fixtures prior to leaving Cooper Lighting. He has personal knowledge of the engineering associated with these products. I am aware of no likely third-party witnesses in Delaware.

I DECLARE UNDER PENALTY OF PERJURY THAT THE FOREGOING IS TRUE AND CORRECT.

Executed this 12 day of September, 2007:

Keith D. Hall

EXHIBIT A

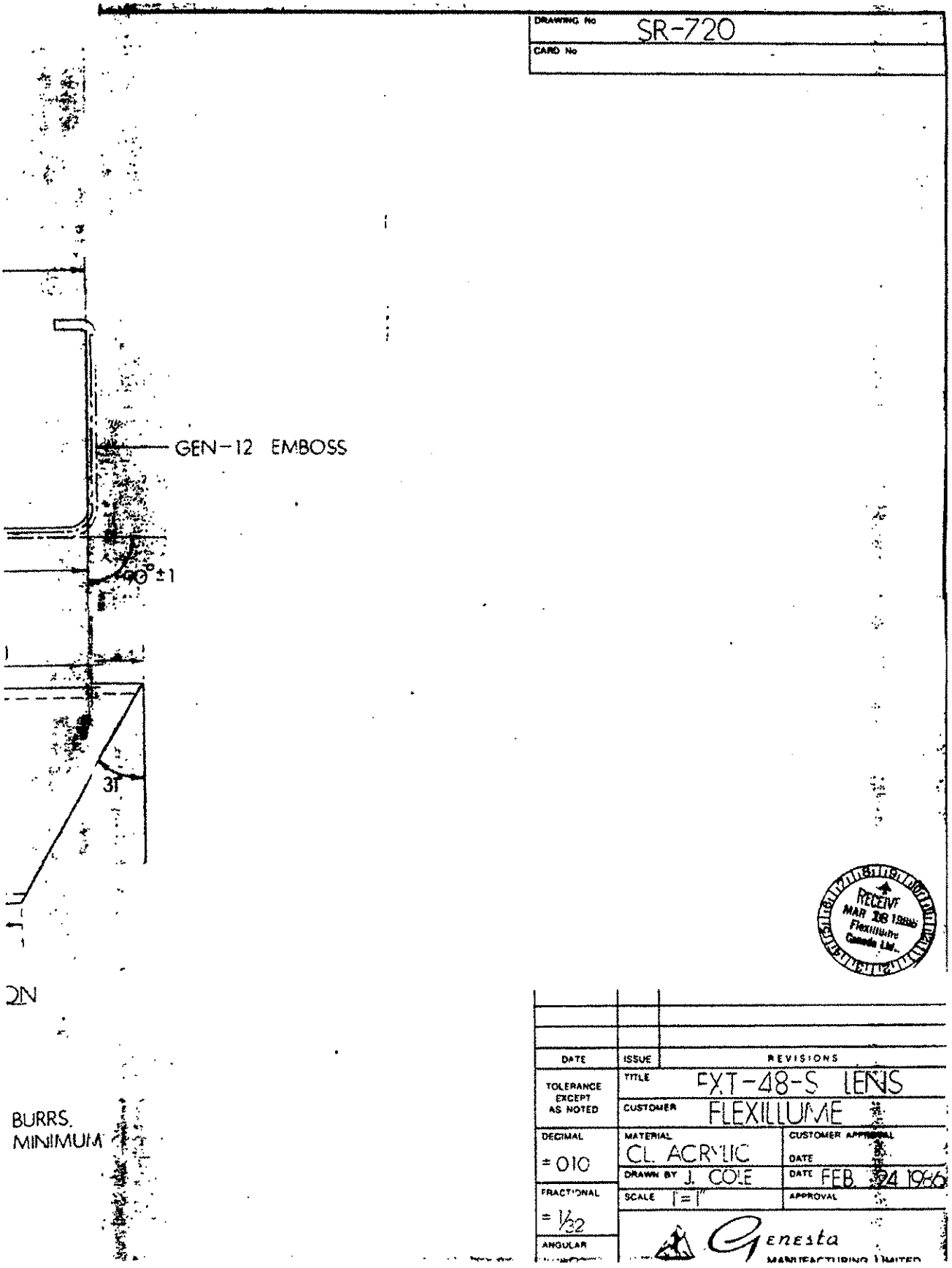
DRAWING No SR-720
CARD No
GEN-12 EMBOSS
90° ±1
31
ON
BURRS.
MINIMUM
RECEIVE
MAR 18 1986
Flexillume
Canada Ltd.
DATE
ISSUE
REVISIONS
TOLERANCE EXCEPT AS NOTED
TITLE EXT-48-S LENS
CUSTOMER FLEXILLUME
DECIMAL ±.010
MATERIAL CL. ACRYLIC
CUSTOMER APPROVAL
DATE
DRAWN BY J. COLE
DATE FEB. 24 1986
FRACTIONAL ± 1/32
SCALE 1"=1"
APPROVAL
ANGULAR
Genesta
MANUFACTURING LIMITED

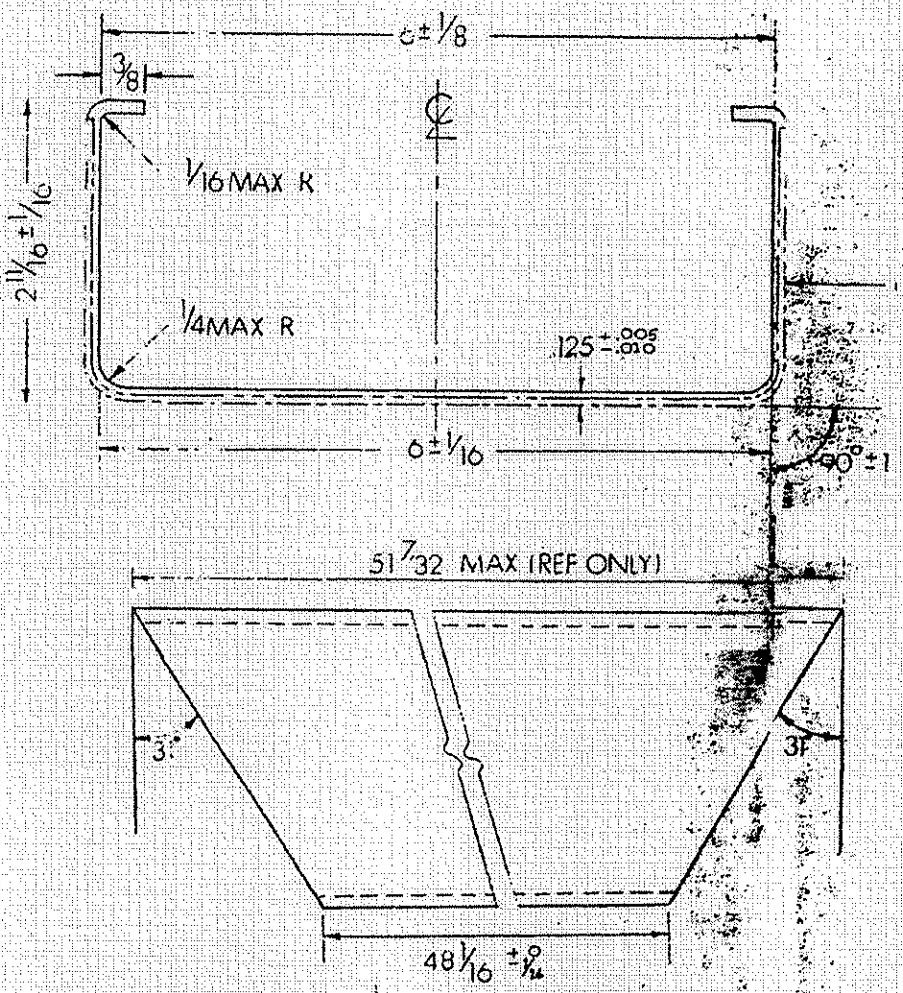

ANGLE CUT INFORMATION
NOT TO SCALE

NOTES:
1. PANEL MUST BE DESTATICIZED.
2. ENDS MUST BE FREE OF CHIPPING AND BURRS.
3. BANANA AND BOW TO BE KEPT TO A MINIMUM.

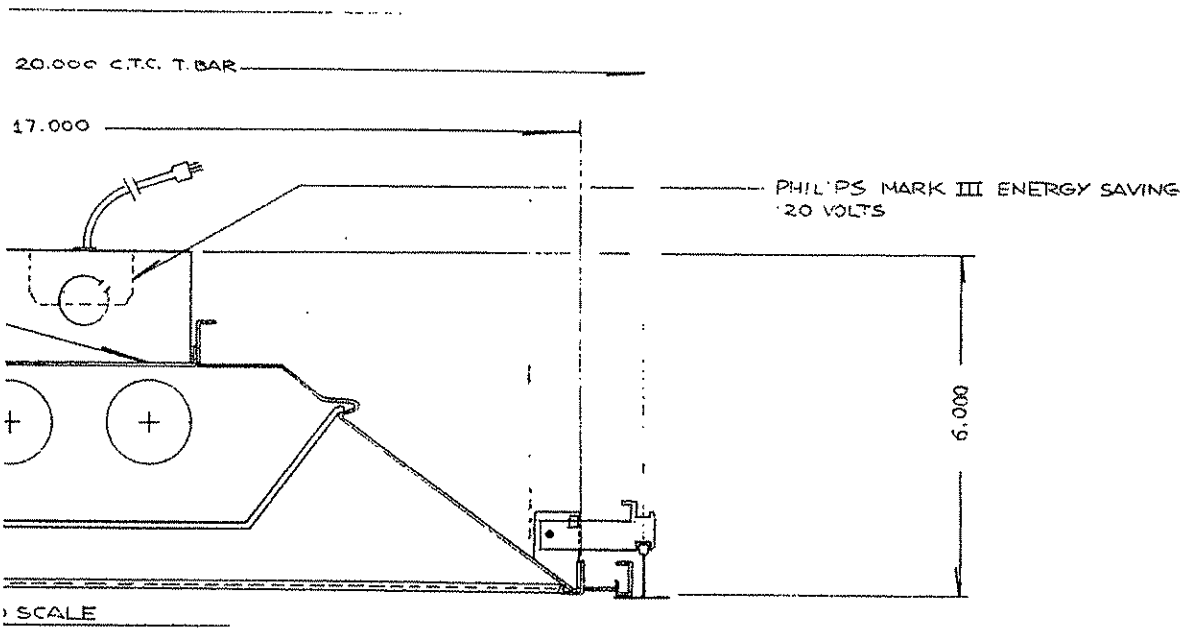

WIRES FOR CEILING TEE'S
T BE LOCATED
RE OPENING

(A) FOR INSTALLATION IN DRY WALL CEILINGS - CONTRACTOR MUST FRAME WITH T. BAR.

(B) COFFER SIDES AND ENDS TO BE FABRICATED FROM PRE-PAINTED STEEL - MATTE FINISH.

(C) FIXTURE BODY CONSRUCTION FROM 20 GA STEEL ENAMEL FINISH.

(D) TRIM FRAME TO CONTAIN BLACK STRIPE WITH AIR SLOTS.

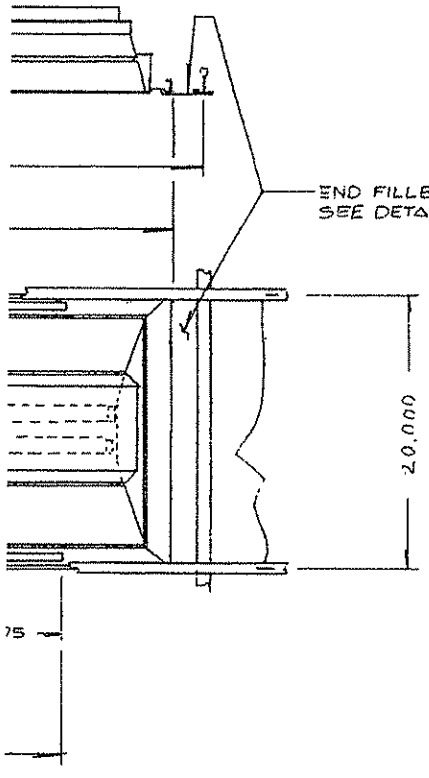

We Reserve The Right At All Times To Make Changes In Design To Facilitate The Production Of This Fixture, But Not To Change The Aesthetic Design Of Said Fixture.

This Drawing Is Not To Be Copied Or Reproduced Without Our Written Consent.

Flexillume CANADA LTD. MARKHAM, ONT.

REVISIONS

FLEXILLUME COFFER FX 2060 - C/W END FILLER PANS

PROJECT C.C. CROWN LIFE.

DRWG. BY | CHKD. BY | SCALE | DATE 14 [illegible] 82

DRWG. NO. L - 1003

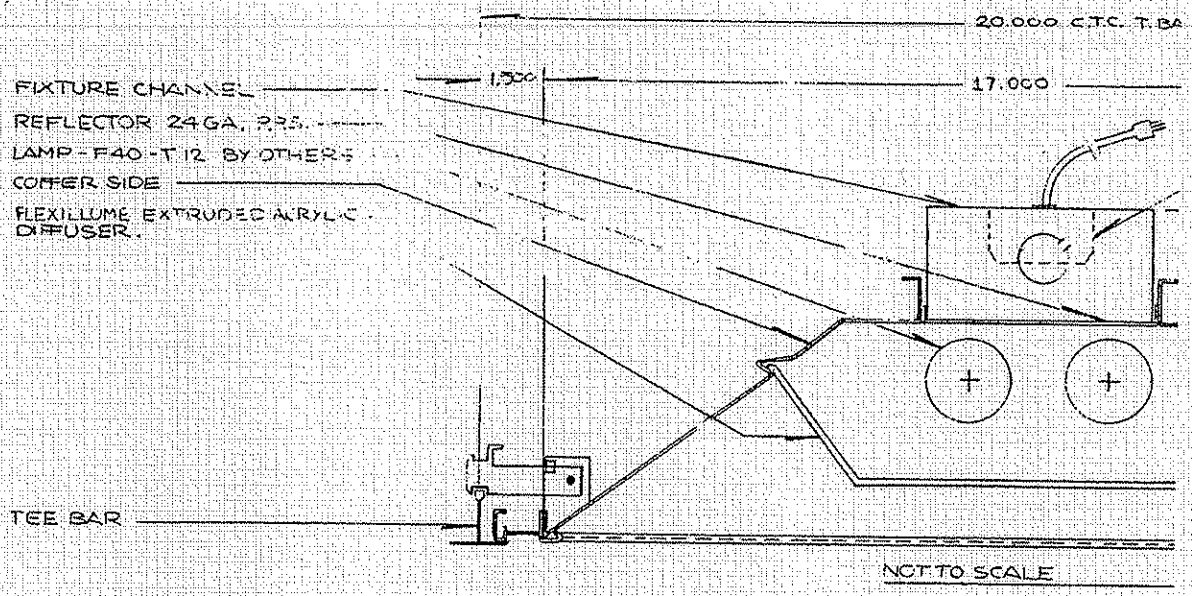
20.000 C.T.C. T. BA
1.500
17.000
FIXTURE CHANNEL
REFLECTOR 24 GA. PRS.
LAMP - F40 - T 12 BY OTHERS
COFFER SIDE
FLEXILLUME EXTRUDED ACRYLIC DIFFUSER.
TEE BAR
NOT TO SCALE

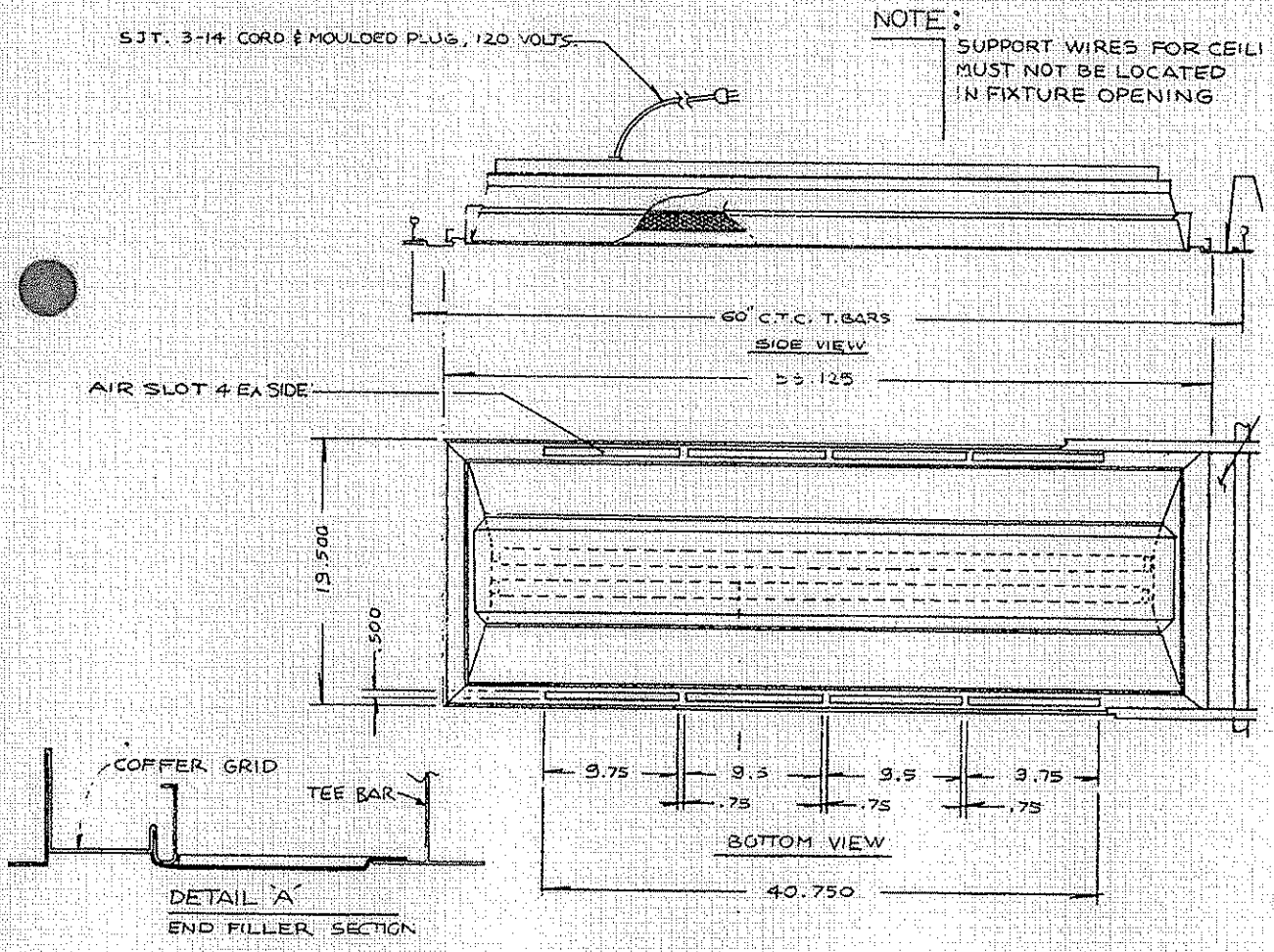
SJT. 3-14 CORD & MOULDED PLUG, 120 VOLTS.
NOTE:
SUPPORT WIRES FOR CEILI
MUST NOT BE LOCATED
IN FIXTURE OPENING
60" C.T.C. T. BARS
SIDE VIEW
AIR SLOT 4 EA SIDE
19.500
.500
COFFER GRID
TEE BAR
9.75
9.5
9.5
9.75
.75
.75
.75
BOTTOM VIEW
40.750
DETAIL 'A'
END FILLER SECTION

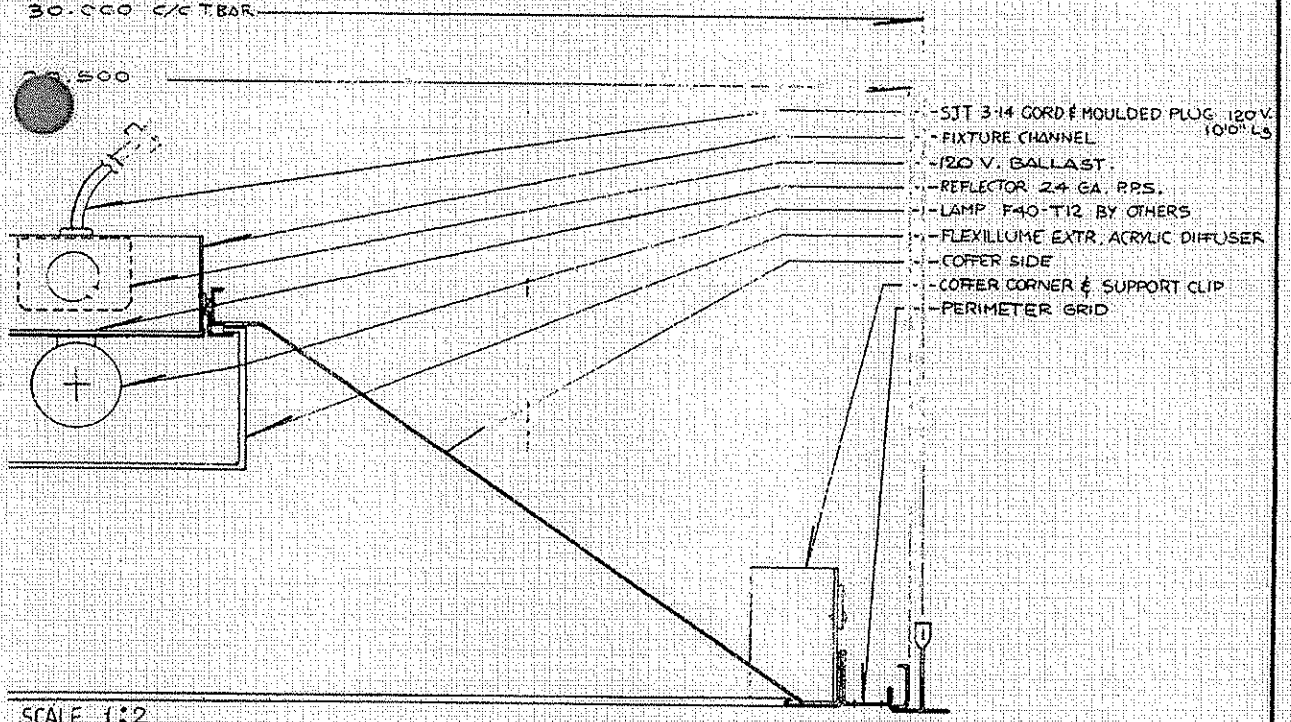

SCALE 1:2

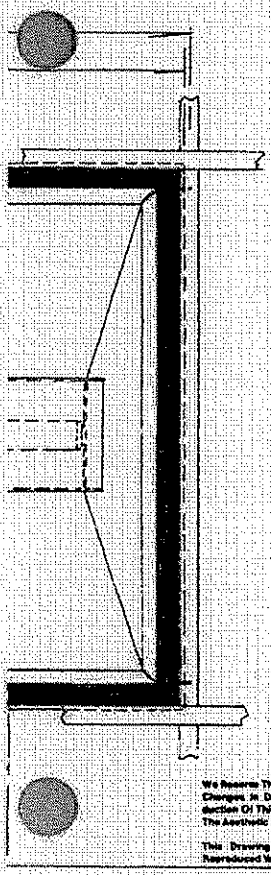

NOTE:

1. SUPPORT WIRES FOR CEILING TEES MUST NOT BE LOCATED IN FIXTURE OPENING.
2. FOR INSTALLATION IN DRY WALL CEILINGS, CONTRACTOR MUST FRAME WITH T BAR.
3. COFFER SIDE AND ENDS, FABRICATED FROM PRE-PAINTED STEEL, MATTE FINISH.
4. FIXTURE BODY CONSTRUCTION FROM 20 GA STEEL. B.W.E. ENAMEL FINISH
5. TRIM FRAME TO CONTAIN BLACK STRIPE WITH AIR SLOT.

REVISIONS	
1	AUG-11-1982

We Reserve The Right At All Times To Make Changes In Design To Facilitate The Production Of This Fixture, But Not To Change The Aesthetic Design Of Said Fixture.

This Drawing Is Not To Be Copied Or Reproduced Without Our Written Consent.

Flexillume CANADA LTD. MARKHAM, ONT.

FLEXILLUME COFFER FXT 3060 - 120 VOLTS

PROJECT 70 UNIVERSITY

DRWG. BY | CHKD. BY | SCALE | DATE 8-7-82

DRWG. NO. L-1004

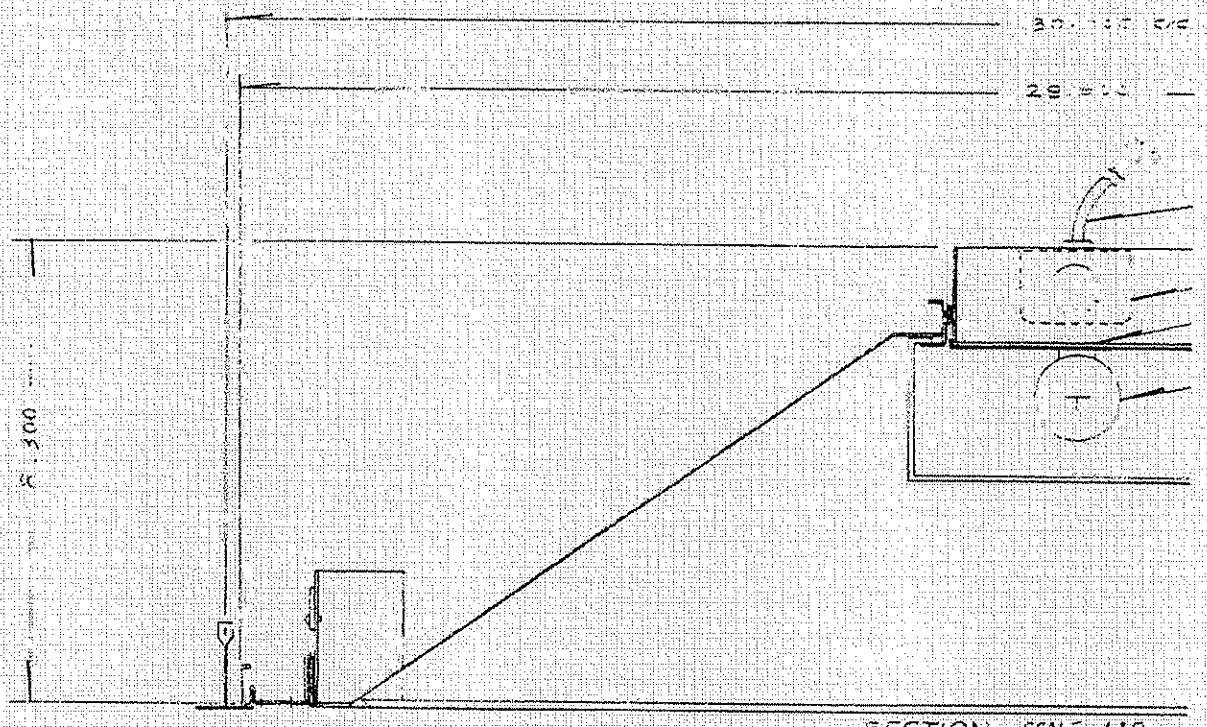

SECTION - SCALE 1:2

BOTTOM VIEW - SCALE 1:6

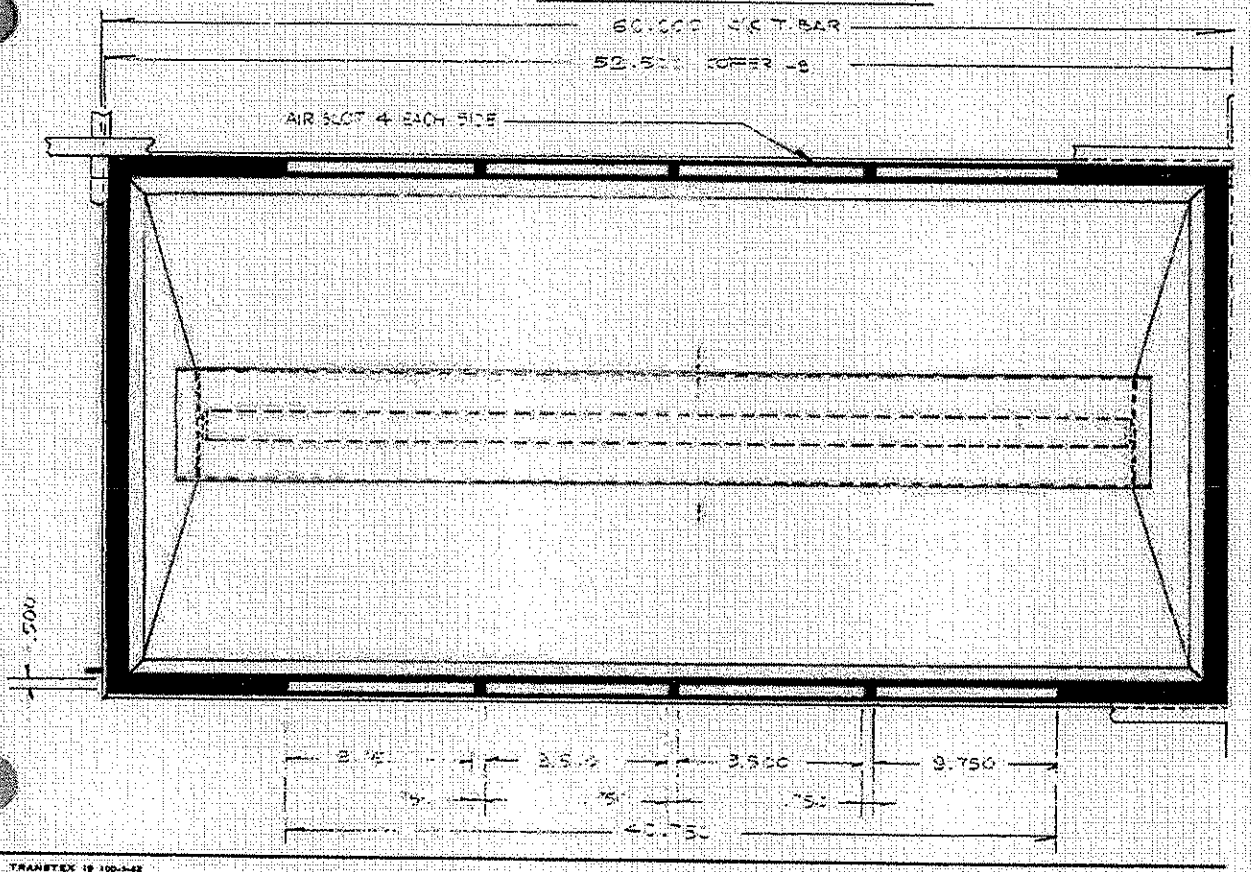

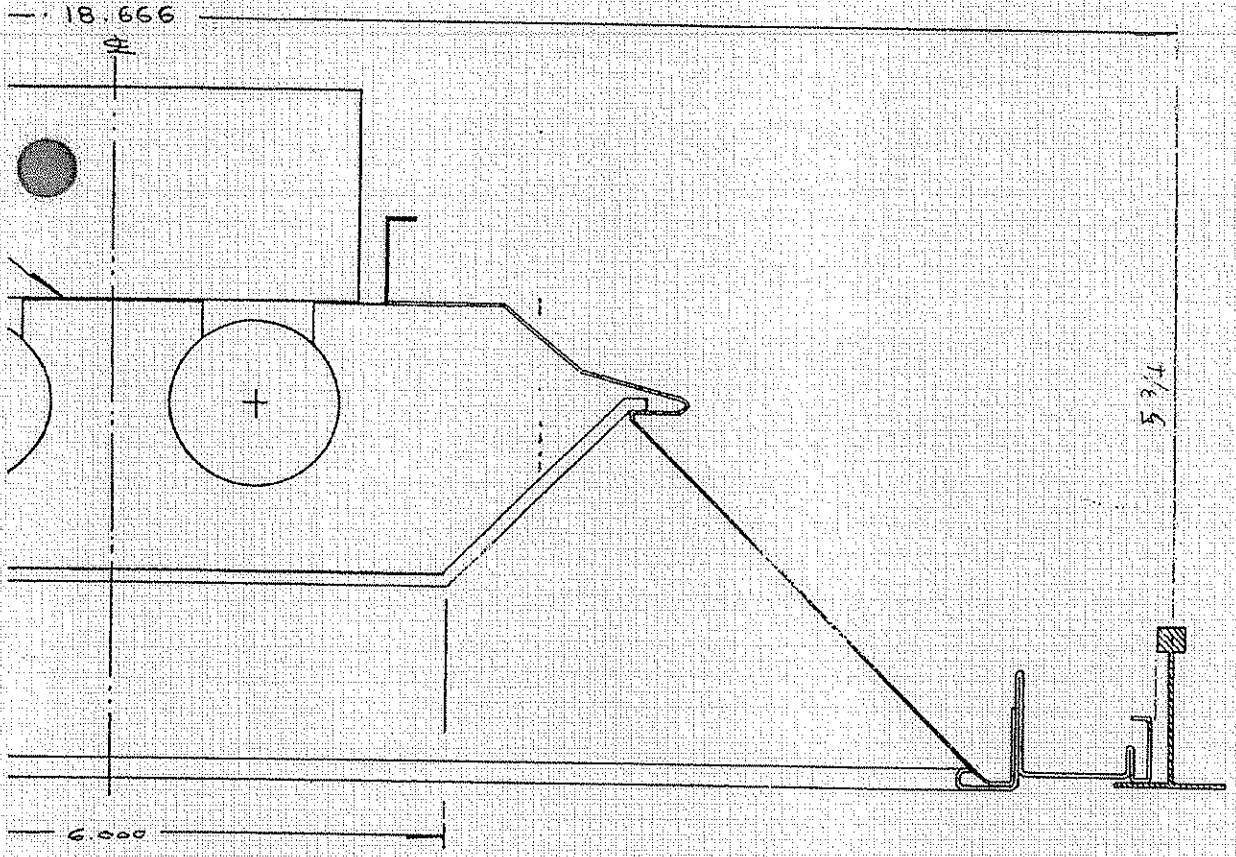

NOTE:
SUPPORT WIRES FOR CEILING TEE'S MUST NOT BE LOCATED IN FIXTURE OPENING

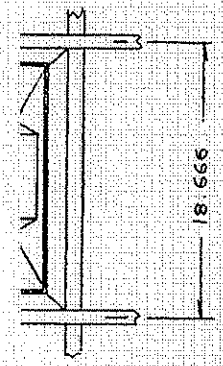

(A) FOR INSTALLATION IN DRY WALL CEILINGS CONTRACTOR MUST FRAME WITH T. BAR.

(B) COFFER SIDES AND ENDS TO BE FABRICATED FROM PRE-PAINTED STEEL - MATTE FINISH.

(C) FIXTURE BODY CONSTRUCTION FROM 20 GA STEEL ENAMEL FINISH.

(D) TRIM FRAME TO CONTAIN BLACK STRIPE WITH AIR SLOTS.

We Reserve The Right At All Times To Make Changes In Design To Facilitate The Production Of This Fixture, But Not To Change The Aesthetic Design Of Said Fixture.

This Drawing Is Not To Be Copied Or Reproduced Without Our Written Consent.

Flexillume CANADA LTD. MARKHAM, ONT.

REVISIONS

FLEXILLUME COFFER FX A

PROJECT PROPOSAL CONVENTION CENTRE TORONTO

DRWG. BY | CHKED. BY | SCALE | DATE 1-10-88

DRWG. NO. L-1006

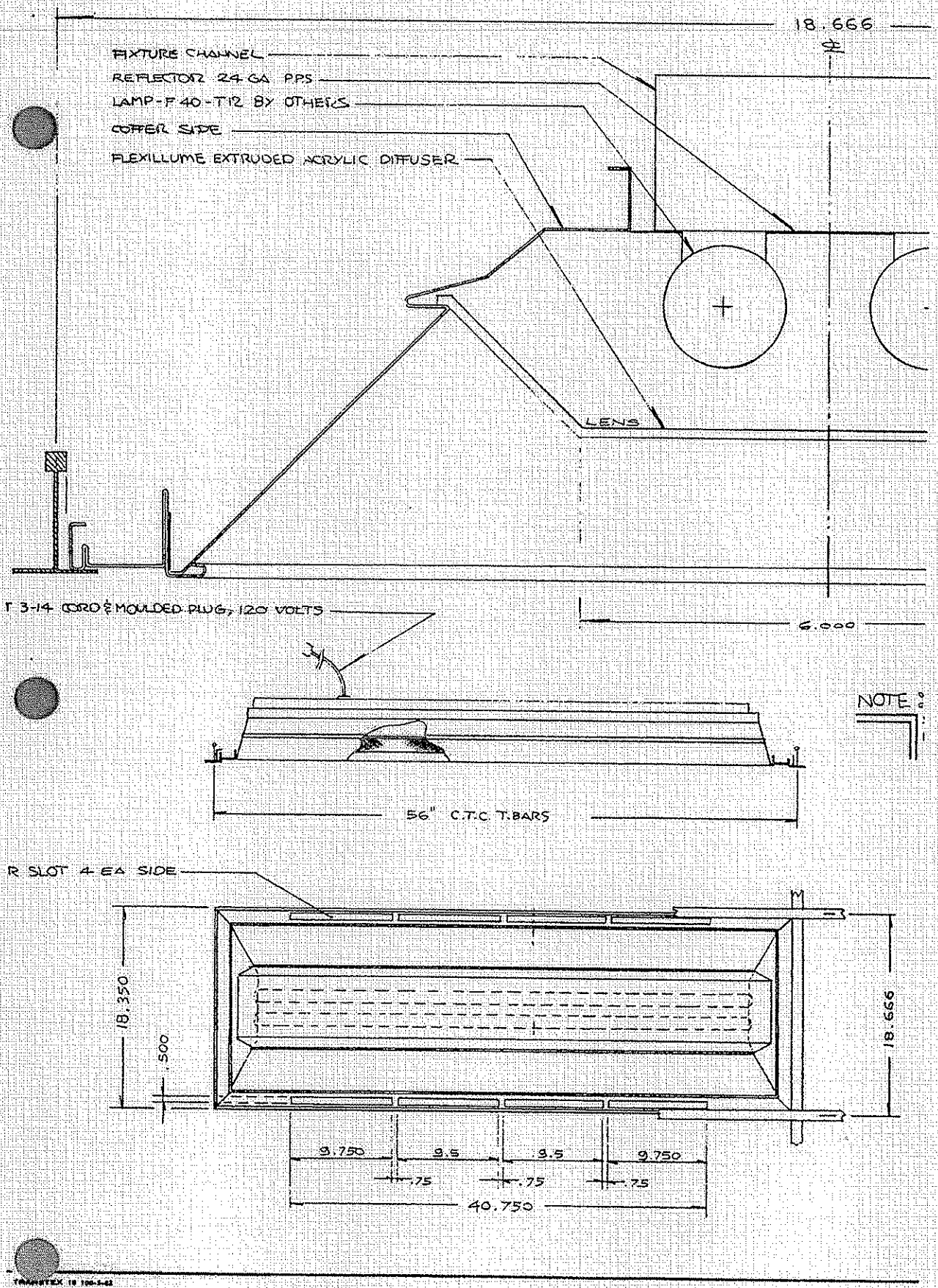
18.666
FIXTURE CHANNEL
REFLECTOR 24 GA PPS
LAMP-F 40-T12 BY OTHERS
COFFER SIDE
FLEXILLUME EXTRUDED ACRYLIC DIFFUSER
LENS
6.000
T 3-14 CORD & MOULDED PLUG, 120 VOLTS
NOTE:
56" C.T.C T.BARS
R SLOT 4 EA SIDE
18.350
.500
18.666
9.750
9.5
9.5
9.750
.75
.75
.75
40.750

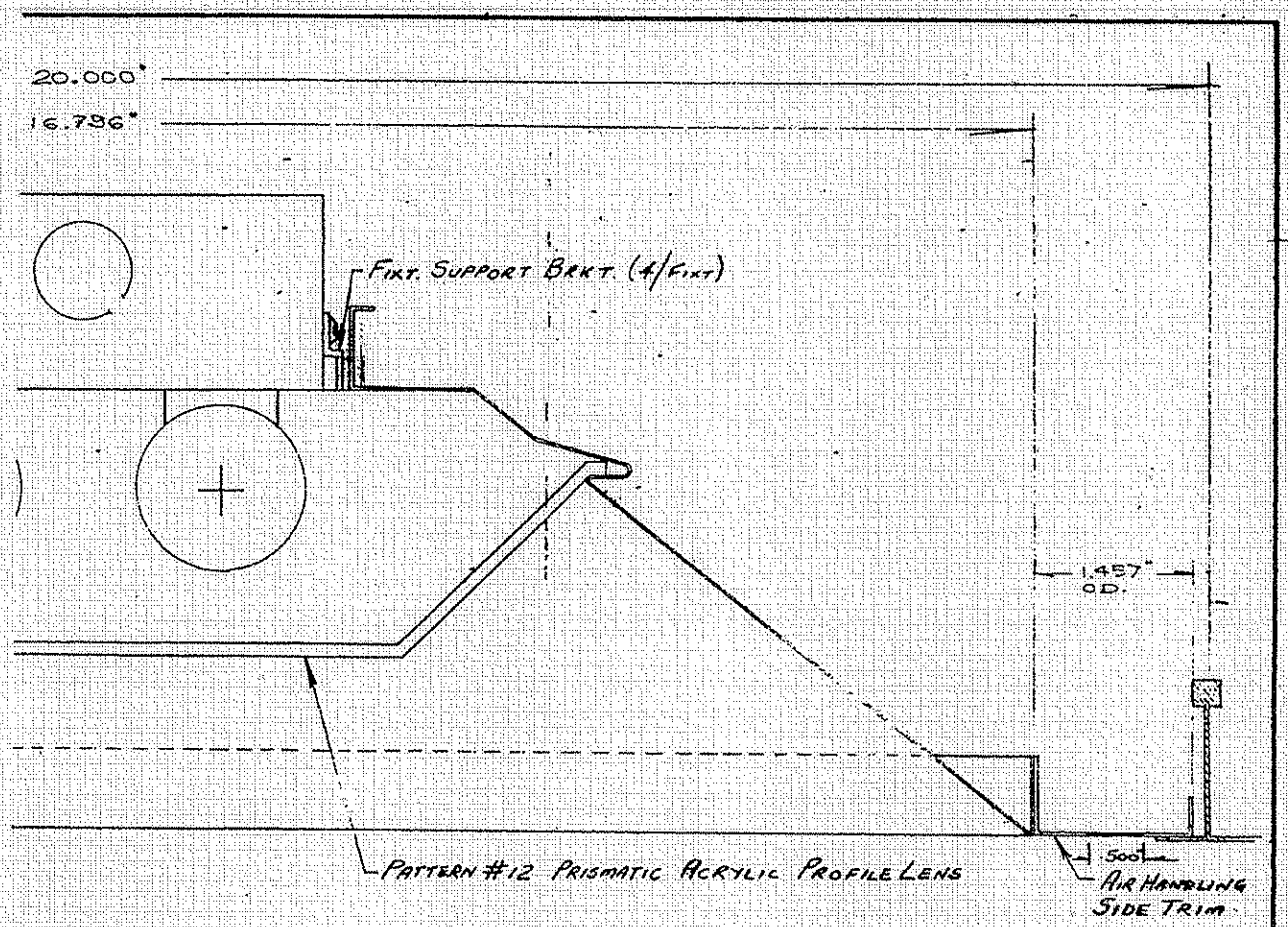

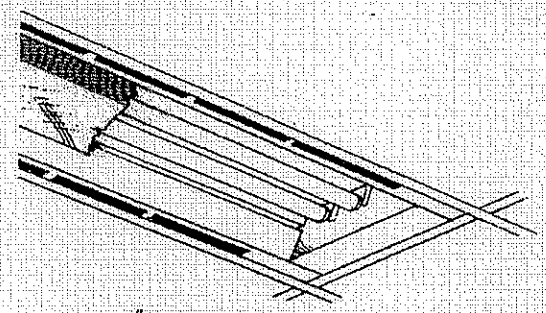

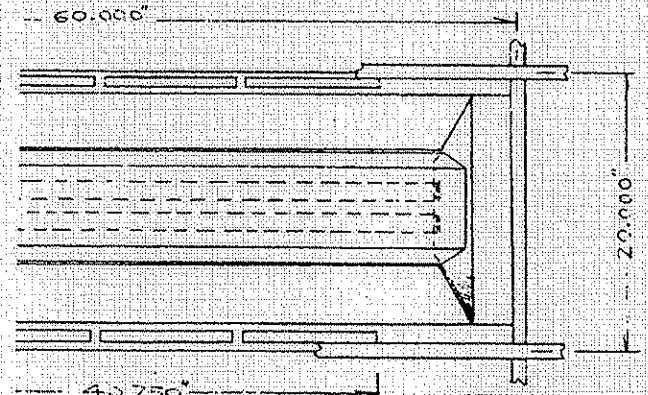

We Reserve The Right At All Times To Make Changes In Design To Facilitate The Production Of This Fixture, But Not To Change The Aesthetic Design Of Said Fixture.

This Drawing Is Not To Be Copied Or Reproduced Without Our Written Consent.

Flexillume CANADA LTD. MARKHAM, ONT.

MINI II COFFER
PROJECT ONE PIECE END PLATE & END FILLER
DRWN. BY CHK'ED. BY SCALE DATE 23-2-87
DRWG. NO. L-1029

REVISIONS

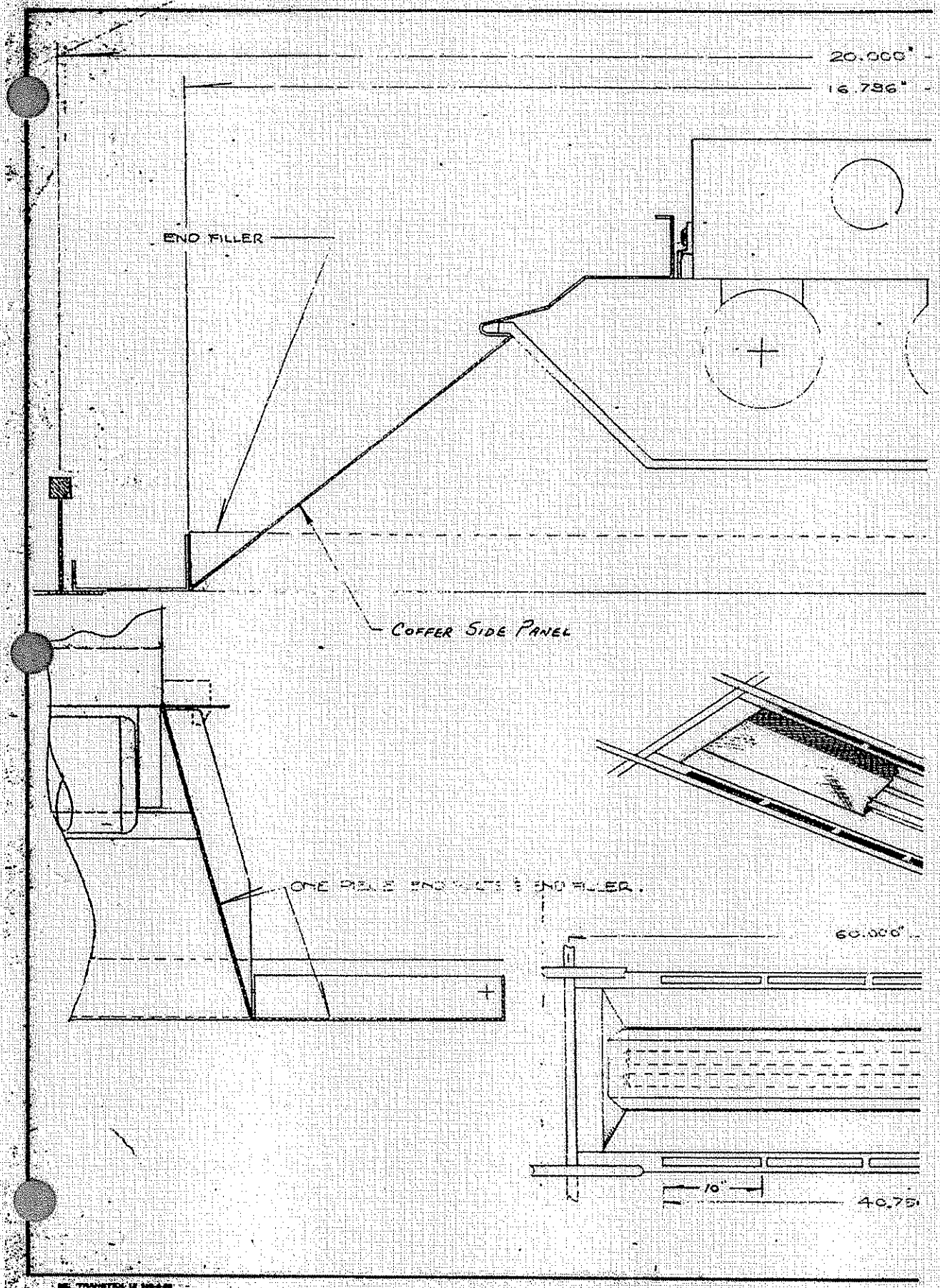
20.000"
16.786"
END FILLER
COFFER SIDE PANEL
60.000"
10"
40.75"

SECTION FOR TYPE: MA-MC.

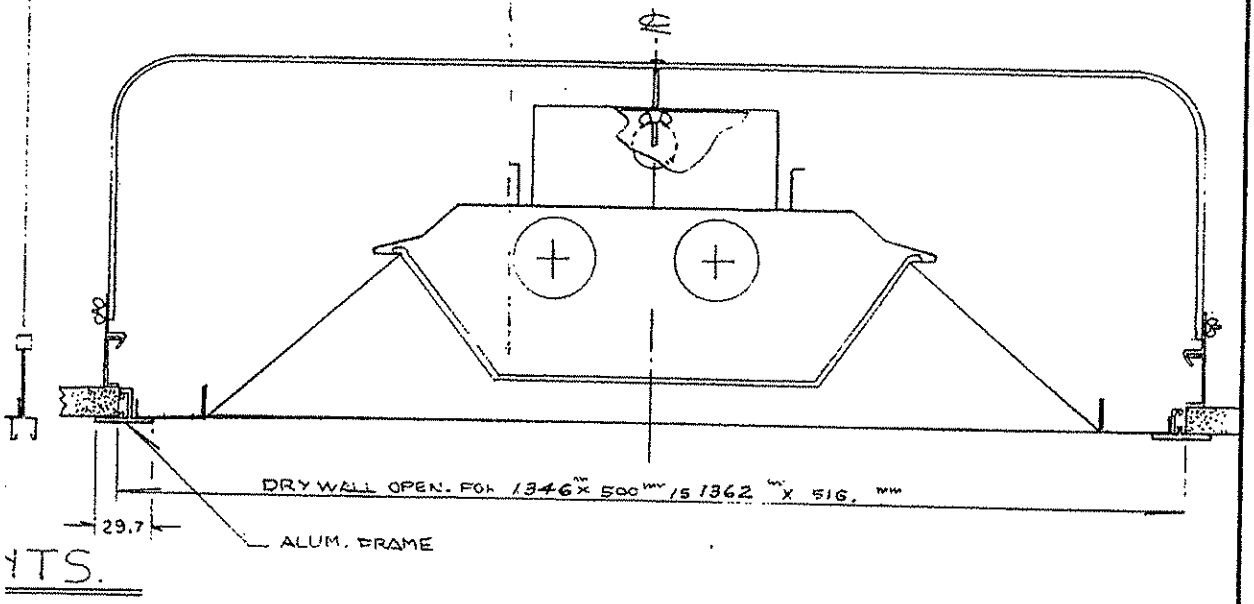

NTS.

MC 20248 M-12 FL.

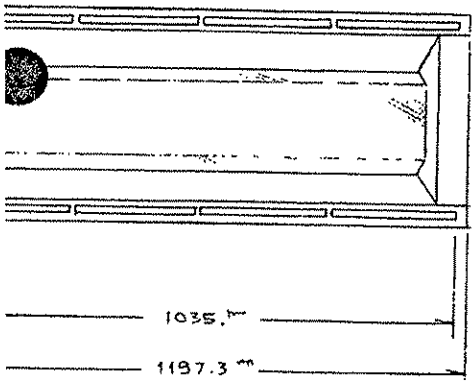

TYPE MC 20253M-12FL-F (NA)

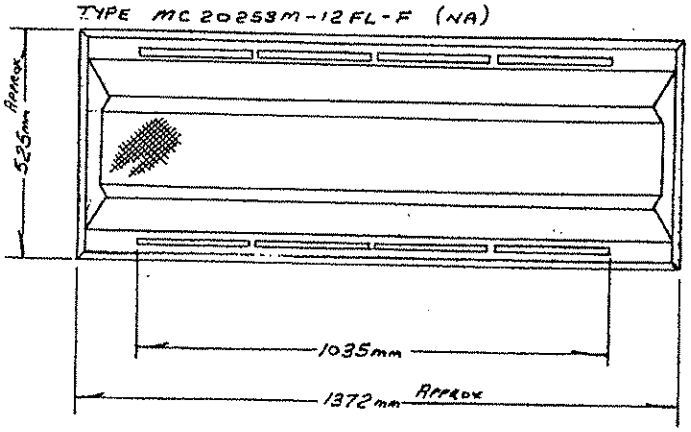

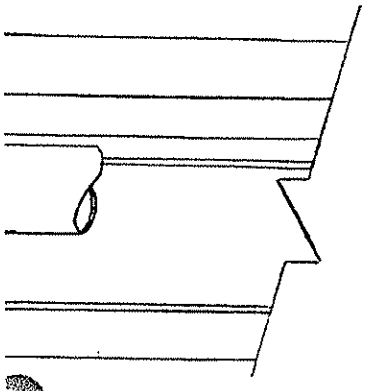

NOTE:
TYPE MC SIMILAR TO TYPE MA BUT SUPPLIED C/W BLANK - OFF STRIPS.

TYPE M	MC 20260 M-12 FL.
" MA	MC 20253 M-12 FL-F
" MB	MC 20248 M-12 FL.
" MC	MC 20253 M-12 FL-F-NA

ADDED DRYWALL DETAIL — REVISIONS — DATE

We Reserve The Right At All Times To Make Changes In Design To Facilitate The Production Of This Fixture, But Not To Change The Aesthetic Design Of Said Fixture.

This Drawing Is Not To Be Copied Or Reproduced Without Our Written Consent

Flexillume CANADA LTD. MARKHAM, ONT.

MINI II METRIC
PROJECT 1 UNIVERSITY AVE.
DRWG. BY | CHKED. BY | SCALE NTS. | DATE 3-7-84
DRWG. NO. L-1031

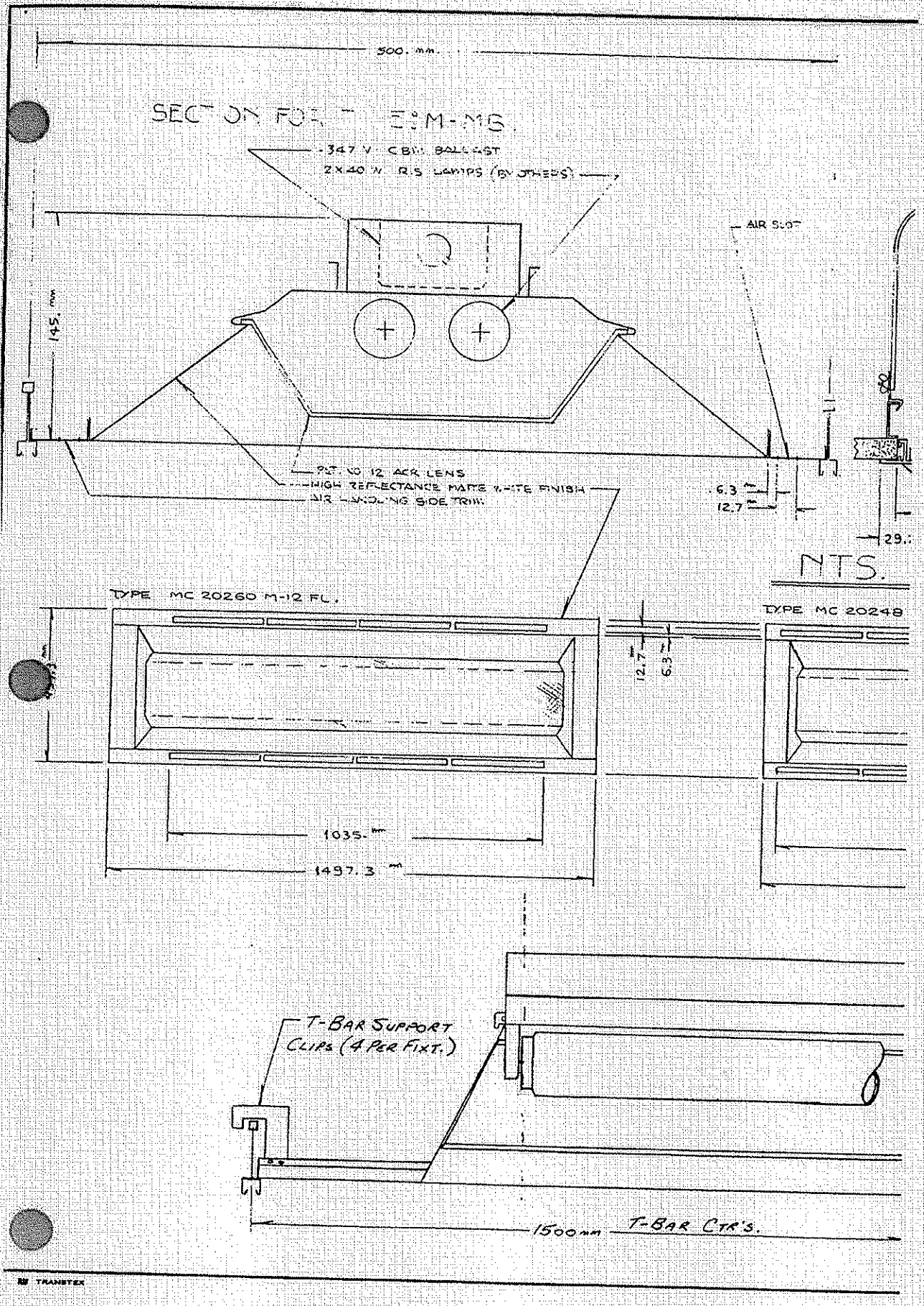
500. mm.
SECTION FOR TYPE M-MB.
347 V. CBM BALLAST
2X40 W. R.S LAMPS (BY OTHERS)
AIR SLOT
145. mm
PLT. NO 12 ACR LENS
HIGH REFLECTANCE MATTE WHITE FINISH
AIR HANDLING SIDE TRIM
6.3
12.7
29.
NTS.
TYPE MC 20260 M-12 FL.
TYPE MC 20248
12.7
6.3
1035. mm
1497.3 mm
T-BAR SUPPORT CLIPS (4 PER FIXT.)
1500 mm T-BAR CTR'S.
TRANSTEX

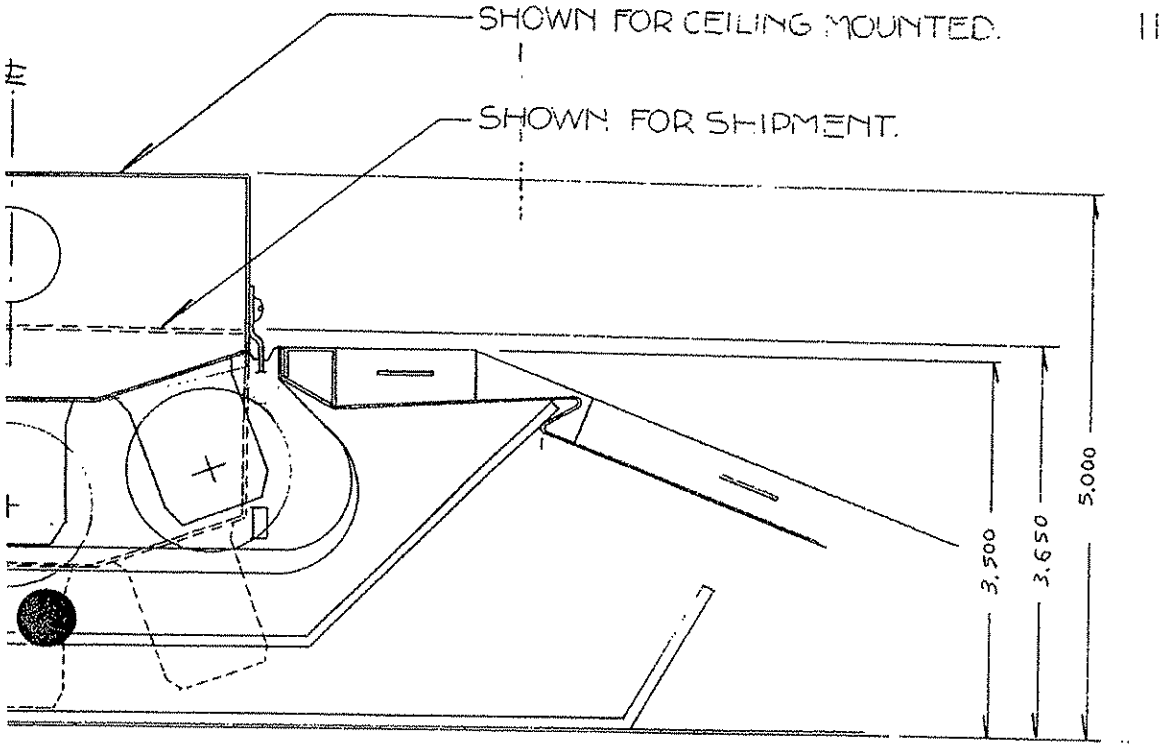

We Reserve The Right At All Times To Make Changes In Design To Facilitate The Production Of This Fixture, But Not To Change The Aesthetic Design Of Said Fixture.

This Drawing Is Not To Be Copied Or Reproduced Without Our Written Consent.

Flexillume CANADA LTD. MARKHAM, ONT.

J 6m SERIES

PROJECT 2x4 MARKET

DRWG. BY | CHKED. BY | SCALE 1:1 | DATE 31-1-84

SHEET 2 OF 2

DRWG. NO. L-1046

REVISIONS

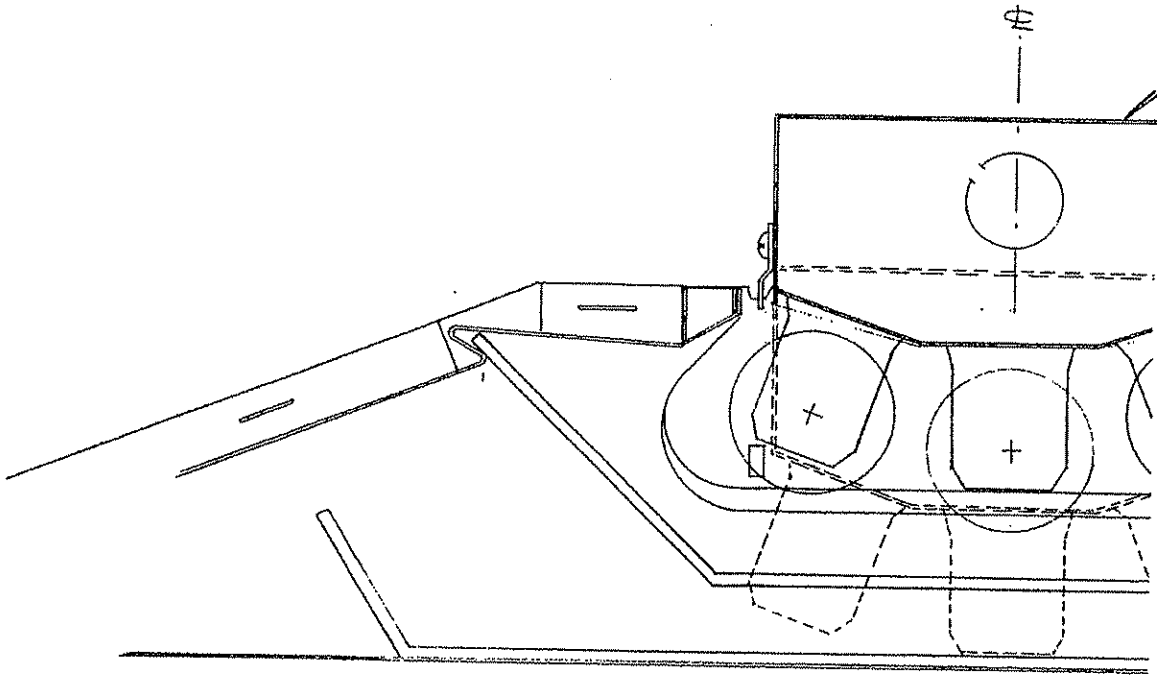

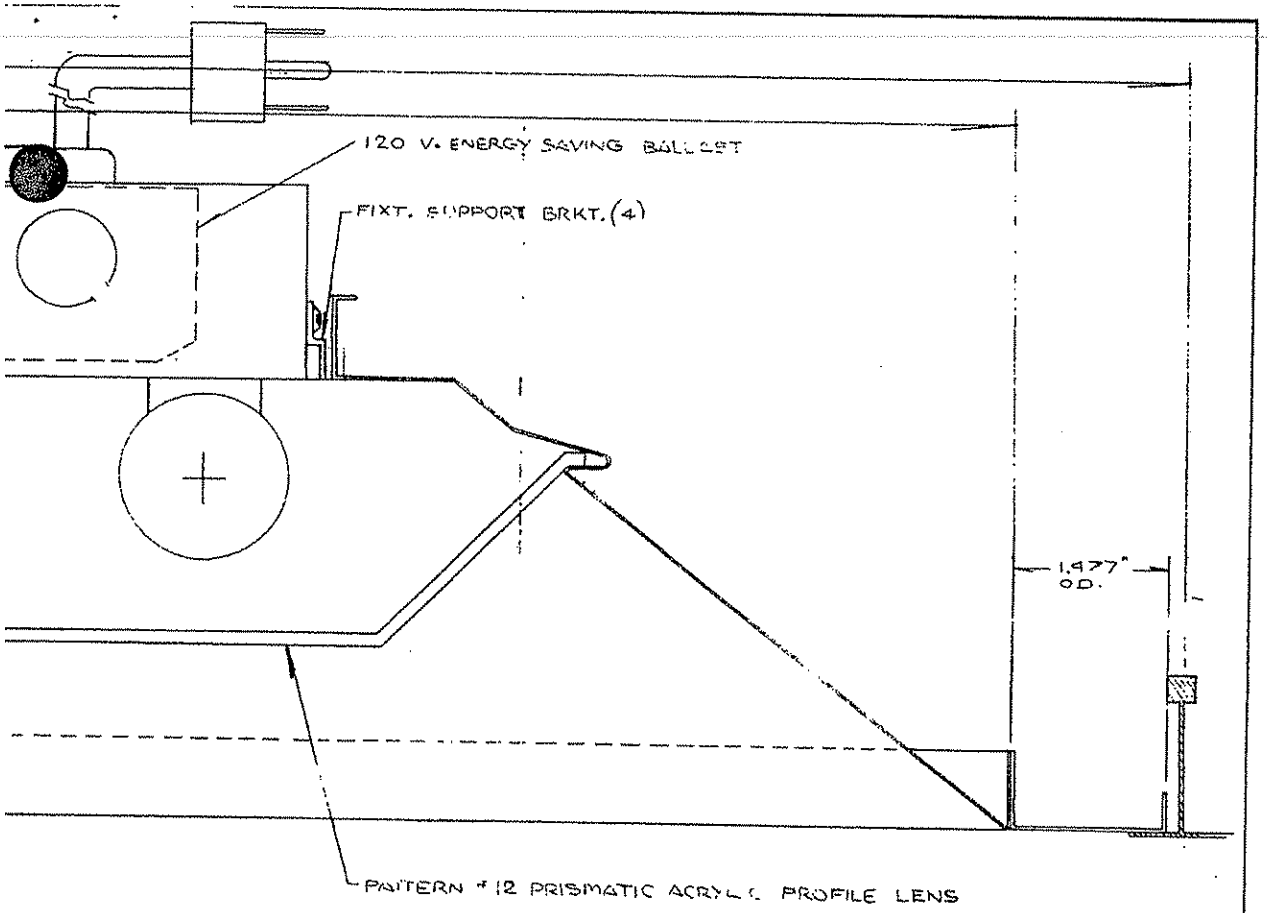

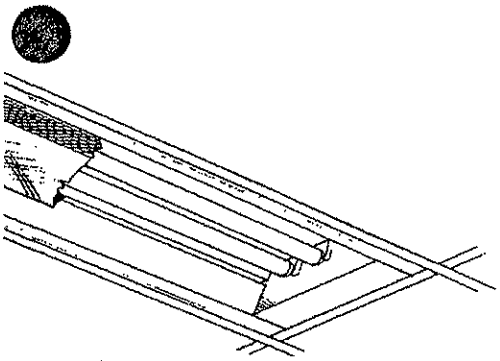

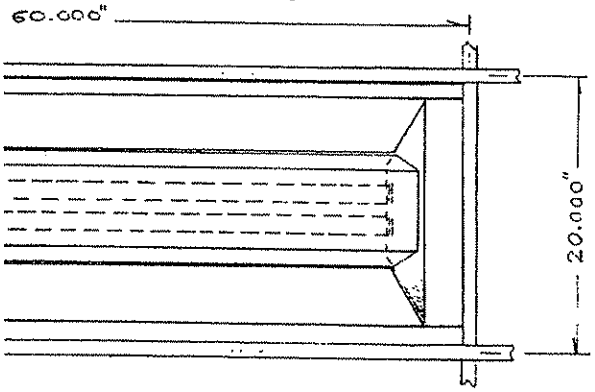

We Reserve The Right At All Times To Make Changes In Design To Facilitate The Production Of This Fixture, But Not To Change The Aesthetic Design Of Said Fixture.

This Drawing Is Not To Be Copied Or Reproduced Without Our Written Consent.

Flexillume CANADA LTD. MARKHAM, ONT.

BRAMALEA OFFICE BLDG. BRAMPTON
PROJECT 20' x 60' MINI II COFFER
DRWG. BY | CHKD. BY | SCALE | DATE 6-6-88
REVISIONS
DRWG. NO. L-1196

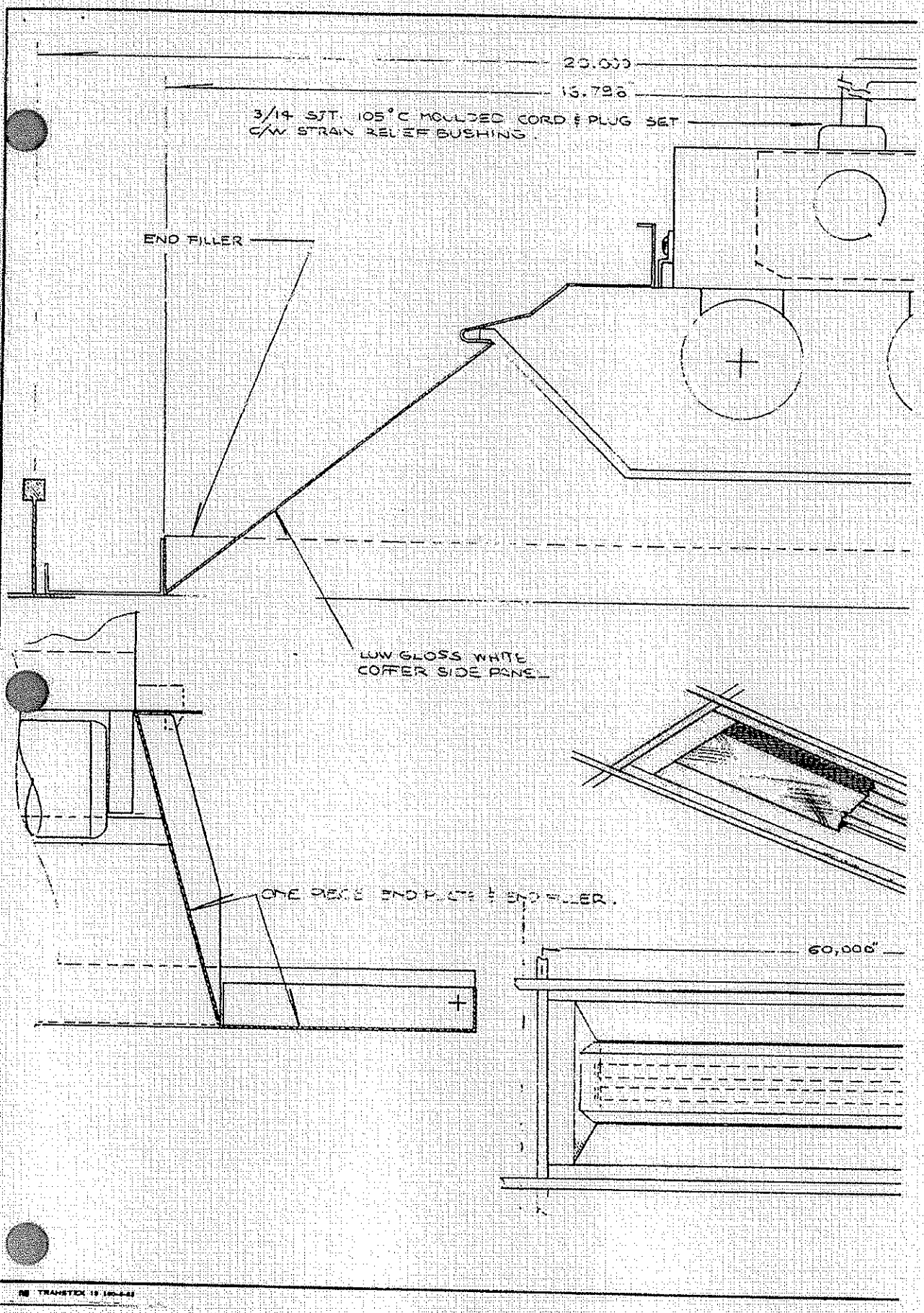
20.000
13.798
3/14 SJT. 105°C MOULDED CORD & PLUG SET
C/W STRAIN RELIEF BUSHING.
END FILLER
LOW GLOSS WHITE
COFFER SIDE PANEL
ONE PIECE END PLATE & END FILLER.
60.000

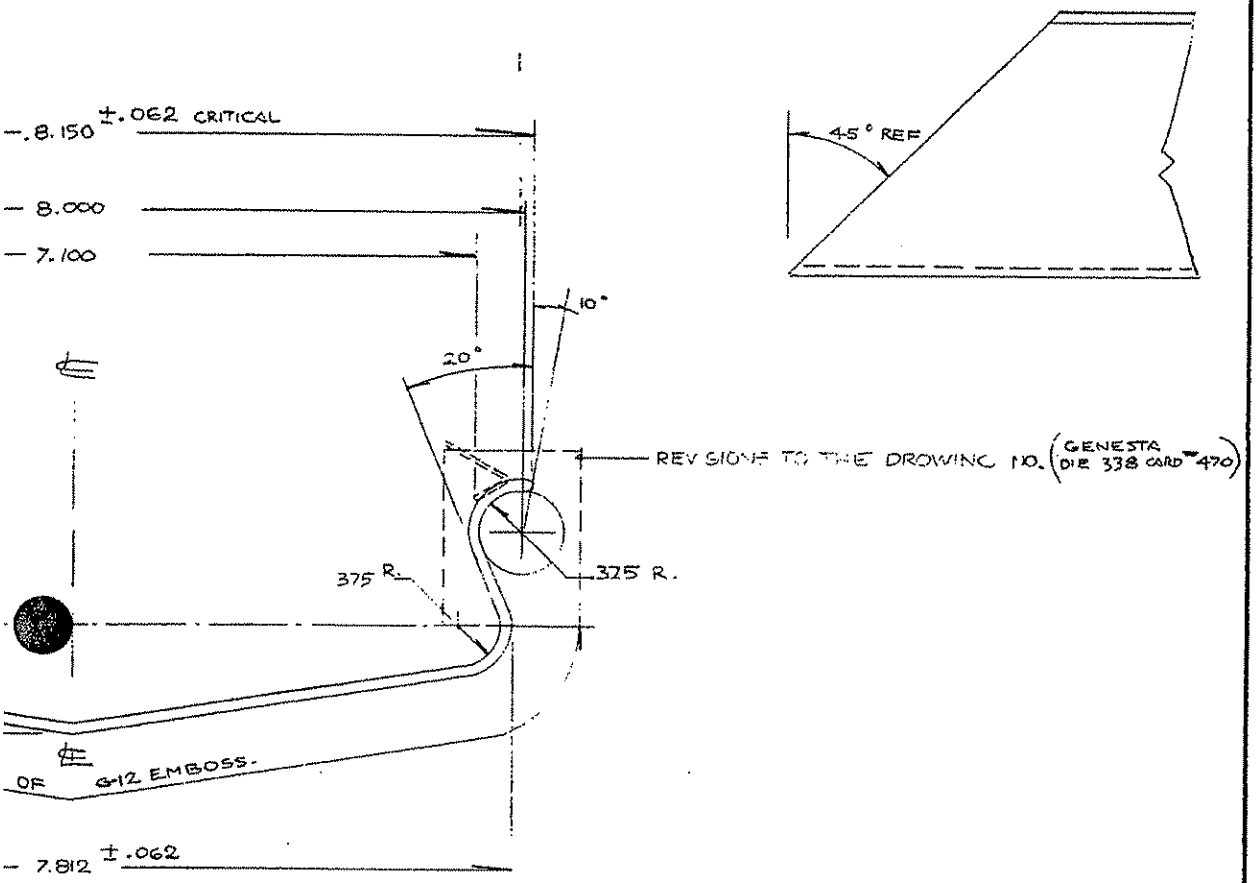

We Reserve The Right At All Times To Make Changes In Design To Facilitate The Production Of The Fixture, But Not To Change The Aesthetic Design Of Said Fixture

This Drawing Is Not To Be Copied Or Reproduced Without Our Written Consent.

All Measurements Subject To Standard Commercial Tolerances

Flexillume CANADA LTD. MARKHAM, ONT

ACRYLIC LENS

REVISIONS

PROJECT

DRWG. BY | CHKED. BY | SCALE 1:1 | DATE 13-10-87

DRWG. NO. L-3207

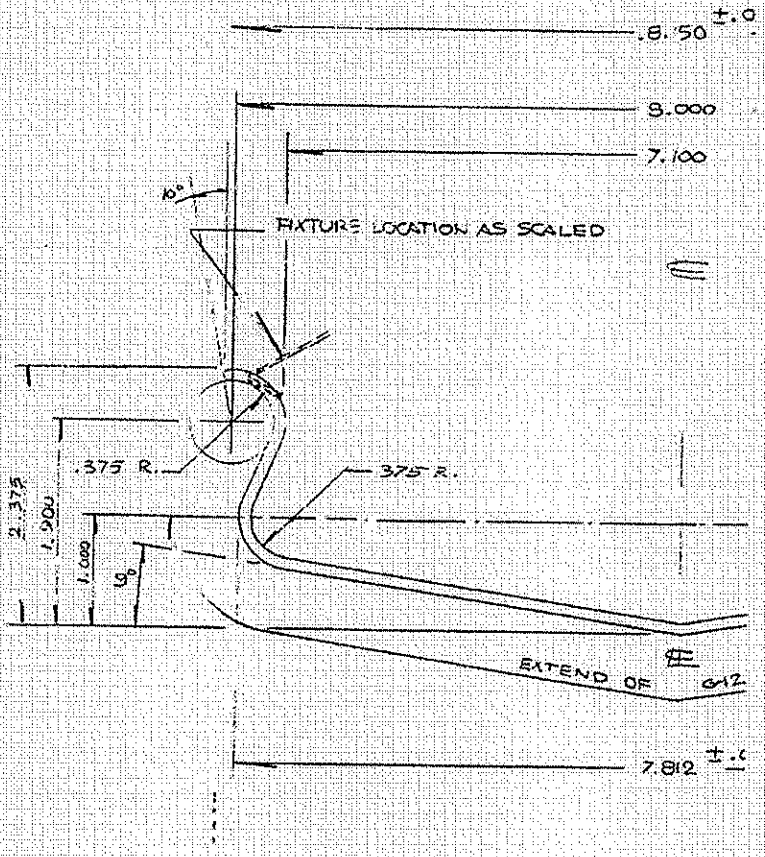

NOTE:
SECTION SYMMETRICAL ABOUT ℄
OVERALL WIDTH .110 ± .010"
PANEL TO BE DESTATICIZED
EDGES TO BE FREE OF BURRS & CHIPPING

IN THE UNITED STATES DISTRICT COURT
FOR THE DISTRICT OF DELAWARE

CERTIFICATE OF SERVICE

I, Philip A. Rovner, hereby certify that on September 13, 2007, the within document was filed with the Clerk of the Court using CM/ECF which will send notification of such filing(s) to the following; that the document was served on the following counsel as indicated; and that the document is available for viewing and downloading from CM/ECF.

BY HAND DELIVERY AND E-MAIL

Jack B. Blumenfeld, Esq.
Rodger D. Smith, II, Esq.
Morris, Nichols, Arsht & Tunnell LLP
1201 N. Market Street
P.O. Box 1347
Wilmington, DE 19899-1347
jblumenfeld@mnat.com
rsmith@mnat.com



Philip A. Rovner (#3215)
Potter Anderson & Corroon LLP
Hercules Plaza
P.O. Box 951
Wilmington, Delaware 19899
(302) 984-6000
E-mail: provner@potteranderson.com