IN THE UNITED STATES DISTRICT COURT
FOR THE DISTRICT OF DELAWARE

ACUITY BRANDS, INC. and ACUITY BRANDS LIGHTING, INC.,	)	
Plaintiffs,	)	
v.	)	C.A. No. _____
COOPER INDUSTRIES, INC. and COOPER LIGHTING, INC.,	)	**DEMAND FOR JURY TRIAL**
Defendants.	)	

COMPLAINT

Plaintiffs Acuity Brands, Inc. and Acuity Brands Lighting, Inc. (collectively, "Acuity") for their Complaint against defendants Cooper Industries, Inc. and Cooper Lighting, Inc. (collectively, "Cooper") allege as follows:

THE PARTIES

1. Plaintiff Acuity Brands, Inc. is a Delaware corporation with offices at 1170 Peachtree Street, NE, Suite 2400, Atlanta, Georgia 30309.

2. Plaintiff Acuity Brands Lighting, Inc. is a Delaware corporation with offices at One Lithonia Way, Conyers, Georgia 30012. Acuity Brands Lighting, Inc. manufactures, markets and sells lighting fixtures and equipment in the United States. Acuity Brands Lighting, Inc. is a wholly-owned subsidiary of Acuity Brands, Inc.

3. On information and belief, defendant Cooper Industries, Inc. is a Delaware corporation with offices at 600 Travis, Suite 5800, Houston, Texas 77002.

4. On information and belief, defendant Cooper Lighting, Inc. is a Delaware corporation with offices at 1121 Highway 74 South, Peachtree City, Georgia 30269.

JURISDICTION AND VENUE

5. This is an action for patent infringement arising under the patent laws of the United States, 35 U.S.C. §§ 1 *et seq*.

6. This Court has subject matter jurisdiction under 28 U.S.C. §§ 1331 and 1338(a).

7. Venue is proper in this judicial district under 28 U.S.C. §§ 1391 and 1400(b).

ASSERTED PATENTS

8. On June 12, 2007, the United States Patent and Trademark Office issued U.S. Patent No. 7,229,192 B ("the '192 patent"), entitled "Light Fixture And Lens Assembly For Same," to John T. Mayfield, III, Stephen H. Lydecker, Gary D. Trott, Carl T. Gould, Kevin Leadford and Christopher L. Sharp. Acuity Brands, Inc. is the owner by assignment of all right, title and interest in the '192 patent, including the right to sue and recover damages for infringement. Acuity Brands, Inc. has granted Acuity Brands Lighting, Inc. a license under the '192 patent. A copy of the '192 patent is attached hereto as Exhibit A.

9. On April 24, 2007, the United States Patent and Trademark Office issued U.S. Patent No. D541,468 S ("the '468 patent"), entitled "Light Fixture Lens," to John T. Mayfield, III, Gary D. Trott, Carl T. Gould and Christopher L. Sharp. Acuity Brands, Inc. is the owner by assignment of all right, title and interest in the '468 patent, including the right to sue and recover damages for infringement. Acuity Brands, Inc. has granted Acuity Brands Lighting, Inc. a license under the '468 patent. A copy of the '468 patent is attached hereto as Exhibit B.

10. On June 12, 2007, the United States Patent and Trademark Office issued U.S. Patent No. D544,633 S ("the '633 patent"), entitled "Light Fixture," to John T. Mayfield,

III, Carl T. Gould, Kevin Leadford and Stephen H. Lydecker. Acuity Brands, Inc. is the owner by assignment of all right, title and interest in the '633 patent, including the right to sue and recover damages for infringement. Acuity Brands, Inc. has granted Acuity Brands Lighting, Inc. a license under the '633 patent. A copy of the '633 patent is attached hereto as Exhibit C.

11. On June 12, 2007, the United States Patent and Trademark Office issued U.S. Patent No. D544,634 S ("the '634 patent"), entitled "Light Fixture," to John T. Mayfield, III, Carl T. Gould, Kevin Leadford and Stephen H. Lydecker. Acuity Brands, Inc. is the owner by assignment of all right, title and interest in the '634 patent, including the right to sue and recover damages for infringement. Acuity Brands, Inc. has granted Acuity Brands Lighting, Inc. a license under the '634 patent. A copy of the '634 patent is attached hereto as Exhibit D.

12. On June 19, 2007, the United States Patent and Trademark Office issued U.S. Patent No. D544,992 S ("the '4,992 patent"), entitled "Light Fixture," to John T. Mayfield, III, Carl T. Gould, Kevin Leadford and Stephen H. Lydecker. Acuity Brands, Inc. is the owner by assignment of all right, title and interest in the '4,992 patent, including the right to sue and recover damages for infringement. Acuity Brands, Inc. has granted Acuity Brands Lighting, Inc. a license under the '4,992 patent. A copy of the '4,992 patent is attached hereto as Exhibit E.

13. On June 19, 2007, the United States Patent and Trademark Office issued U.S. Patent No. D544,993 S ("the '4,993 patent"), entitled "Light Fixture Housing," to John T. Mayfield, III, Kevin Leadford and Stephen H. Lydecker. Acuity Brands, Inc. is the owner by assignment of all right, title and interest in the '4,993 patent, including the right to sue and recover damages for infringement. Acuity Brands, Inc. has granted Acuity Brands Lighting, Inc. a license under the '4,993 patent. A copy of the '4,993 patent is attached hereto as Exhibit F.

14. On June 26, 2007, the United States Patent and Trademark Office issued U.S. Patent No. D545,481 S ("the '481 patent"), entitled "Light Fixture," to John T. Mayfield, III, Carl T. Gould, Kevin Leadford and Stephen H. Lydecker. Acuity Brands, Inc. is the owner by assignment of all right, title and interest in the '481 patent, including the right to sue and recover damages for infringement. Acuity Brands, Inc. has granted Acuity Brands Lighting, Inc. a license under the '481 patent. A copy of the '481 patent is attached hereto as Exhibit G.

15. On June 26, 2007, the United States Patent and Trademark Office issued U.S. Patent No. D545,482 S ("the '482 patent"), entitled "Light Fixture," to John T. Mayfield, III, Carl T. Gould, Kevin Leadford and Stephen H. Lydecker. Acuity Brands, Inc. is the owner by assignment of all right, title and interest in the '482 patent, including the right to sue and recover damages for infringement. Acuity Brands, Inc. has granted Acuity Brands Lighting, Inc. a license under the '482 patent. A copy of the '482 patent is attached hereto as Exhibit H.

16. On June 26, 2007, the United States Patent and Trademark Office issued U.S. Patent No. D545,483 S ("the '483 patent"), entitled "Light Fixture," to John T. Mayfield, III, Carl T. Gould, Kevin Leadford and Stephen H. Lydecker. Acuity Brands, Inc. is the owner by assignment of all right, title and interest in the '483 patent, including the right to sue and recover damages for infringement. Acuity Brands, Inc. has granted Acuity Brands Lighting, Inc. a license under the '483 patent. A copy of the '483 patent is attached hereto as Exhibit I.

17. On July 3, 2007, the United States Patent and Trademark Office issued U.S. Patent No. D545,991 S ("the '991 patent"), entitled "Light Fixture Housing," to John T. Mayfield, III, Kevin Leadford and Stephen H. Lydecker. Acuity Brands, Inc. is the owner by assignment of all right, title and interest in the '991 patent, including the right to sue and recover

damages for infringement. Acuity Brands, Inc. has granted Acuity Brands Lighting, Inc. a license under the '991 patent. A copy of the '991 patent is attached hereto as Exhibit J.

18. On July 3, 2007, the United States Patent and Trademark Office issued U.S. Patent No. D545,992 S ("the '5,992 patent"), entitled "Light Fixture," to John T. Mayfield, III, Carl T. Gould, Kevin Leadford and Stephen H. Lydecker. Acuity Brands, Inc. is the owner by assignment of all right, title and interest in the '5,992 patent, including the right to sue and recover damages for infringement. Acuity Brands, Inc. has granted Acuity Brands Lighting, Inc. a license under the '5,992 patent. A copy of the '5,992 patent is attached hereto as Exhibit K.

19. On July 3, 2007, the United States Patent and Trademark Office issued U.S. Patent No. D545,993 S ("the '5,993 patent"), entitled "Light Fixture," to John T. Mayfield, III, Carl T. Gould, Kevin Leadford and Stephen H. Lydecker. Acuity Brands, Inc. is the owner by assignment of all right, title and interest in the '5,993 patent, including the right to sue and recover damages for infringement. Acuity Brands, Inc. has granted Acuity Brands Lighting, Inc. a license under the '5,993 patent. A copy of the '5,993 patent is attached hereto as Exhibit L.

COUNT ONE
(Infringement of the '192 Patent)

20. Acuity incorporates paragraphs 1 through 19 by reference as though fully set forth herein.

21. Cooper is infringing, inducing the infringement of and/or contributorily infringing the '192 patent in violation of 35 U.S.C. § 271, by making, using, selling, and/or offering for sale in the United States light fixtures covered by the '192 patent, including light fixtures that are part of Cooper's accord™ series of fixtures.

22. Cooper's infringement of the '192 patent has caused Acuity substantial injury for which Acuity is entitled to receive adequate compensation. As a result of Cooper's

infringement of the '192 patent, Acuity is entitled to damages adequate to compensate it for the infringement, but in no event less than a reasonable royalty.

23. On information and belief, Cooper's infringement of the '192 patent has been willful and deliberate.

24. Cooper's infringement of the '192 patent will continue to cause Acuity irreparable injury unless Cooper is enjoined by this Court.

COUNT TWO
(Infringement of the '468 Patent)

25. Acuity incorporates paragraphs 1 through 24 by reference as though fully set forth herein.

26. Cooper is infringing, inducing the infringement of and/or contributorily infringing the '468 patent in violation of 35 U.S.C. § 271, by making, using, selling, and/or offering for sale in the United States light fixtures covered by the '468 patent, including light fixtures that are part of Cooper's accord™ series of fixtures.

27. Cooper's infringement of the '468 patent has caused Acuity substantial injury for which Acuity is entitled to receive adequate compensation. As a result of Cooper's infringement of the '468 patent, Acuity is entitled to damages adequate to compensate it for the infringement, but in no event less than a reasonable royalty.

28. On information and belief, Cooper's infringement of the '468 patent has been willful and deliberate.

29. Cooper's infringement of the '468 patent will continue to cause Acuity irreparable injury unless Cooper is enjoined by this Court.

COUNT THREE
(Infringement of the '633 Patent)

30. Acuity incorporates paragraphs 1 through 29 by reference as though fully set forth herein.

31. Cooper is infringing, inducing the infringement of and/or contributorily infringing the '633 patent in violation of 35 U.S.C. § 271, by making, using, selling, and/or offering for sale in the United States light fixtures covered by the '633 patent, including light fixtures that are part of Cooper's accord™ series of fixtures.

32. Cooper's infringement of the '633 patent has caused Acuity substantial injury for which Acuity is entitled to receive adequate compensation. As a result of Cooper's infringement of the '633 patent, Acuity is entitled to damages adequate to compensate it for the infringement, but in no event less than a reasonable royalty.

33. On information and belief, Cooper's infringement of the '633 patent has been willful and deliberate.

34. Cooper's infringement of the '633 patent will continue to cause Acuity irreparable injury unless Cooper is enjoined by this Court.

COUNT FOUR
(Infringement of the '634 Patent)

35. Acuity incorporates paragraphs 1 through 34 by reference as though fully set forth herein.

36. Cooper is infringing, inducing the infringement of and/or contributorily infringing the '634 patent in violation of 35 U.S.C. § 271, by making, using, selling, and/or offering for sale in the United States light fixtures covered by the '634 patent, including light fixtures that are part of Cooper's accord™ series of fixtures.

37. Cooper's infringement of the '634 patent has caused Acuity substantial injury for which Acuity is entitled to receive adequate compensation. As a result of Cooper's infringement of the '634 patent, Acuity is entitled to damages adequate to compensate it for the infringement, but in no event less than a reasonable royalty.

38. On information and belief, Cooper's infringement of the '634 patent has been willful and deliberate.

39. Cooper's infringement of the '634 patent will continue to cause Acuity irreparable injury unless Cooper is enjoined by this Court.

COUNT FIVE
(Infringement of the '4,992 Patent)

40. Acuity incorporates paragraphs 1 through 39 by reference as though fully set forth herein.

41. Cooper is infringing, inducing the infringement of and/or contributorily infringing the '4,992 patent in violation of 35 U.S.C. § 271, by making, using, selling, and/or offering for sale in the United States light fixtures covered by the '4,992 patent, including light fixtures that are part of Cooper's accord™ series of fixtures.

42. Cooper's infringement of the '4,992 patent has caused Acuity substantial injury for which Acuity is entitled to receive adequate compensation. As a result of Cooper's infringement of the '4,992 patent, Acuity is entitled to damages adequate to compensate it for the infringement, but in no event less than a reasonable royalty.

43. On information and belief, Cooper's infringement of the '4,992 patent has been willful and deliberate.

44. Cooper's infringement of the '4,992 patent will continue to cause Acuity irreparable injury unless Cooper is enjoined by this Court.

COUNT SIX
(Infringement of the '4,993 Patent)

45. Acuity incorporates paragraphs 1 through 44 by reference as though fully set forth herein.

46. Cooper is infringing, inducing the infringement of and/or contributorily infringing the '4,993 patent in violation of 35 U.S.C. § 271, by making, using, selling, and/or offering for sale in the United States light fixtures covered by the '4,993 patent, including light fixtures that are part of Cooper's accord™ series of fixtures.

47. Cooper's infringement of the '4,993 patent has caused Acuity substantial injury for which Acuity is entitled to receive adequate compensation. As a result of Cooper's infringement of the '4,993 patent, Acuity is entitled to damages adequate to compensate it for the infringement, but in no event less than a reasonable royalty.

48. On information and belief, Cooper's infringement of the '4,993 patent has been willful and deliberate.

49. Cooper's infringement of the '4,993 patent will continue to cause Acuity irreparable injury unless Cooper is enjoined by this Court.

COUNT SEVEN
(Infringement of the '481 Patent)

50. Acuity incorporates paragraphs 1 through 49 by reference as though fully set forth herein.

51. Cooper is infringing, inducing the infringement of and/or contributorily infringing the '481 patent in violation of 35 U.S.C. § 271, by making, using, selling, and/or offering for sale in the United States light fixtures covered by the '481 patent, including light fixtures that are part of Cooper's accord™ series of fixtures.

52. Cooper's infringement of the '481 patent has caused Acuity substantial injury for which Acuity is entitled to receive adequate compensation. As a result of Cooper's infringement of the '481 patent, Acuity is entitled to damages adequate to compensate it for the infringement, but in no event less than a reasonable royalty.

53. On information and belief, Cooper's infringement of the '481 patent has been willful and deliberate.

54. Cooper's infringement of the '481 patent will continue to cause Acuity irreparable injury unless Cooper is enjoined by this Court.

COUNT EIGHT
(Infringement of the '482 Patent)

55. Acuity incorporates paragraphs 1 through 54 by reference as though fully set forth herein.

56. Cooper is infringing, inducing the infringement of and/or contributorily infringing the '482 patent in violation of 35 U.S.C. § 271, by making, using, selling, and/or offering for sale in the United States light fixtures covered by the '482 patent, including light fixtures that are part of Cooper's accord™ series of fixtures.

57. Cooper's infringement of the '482 patent has caused Acuity substantial injury for which Acuity is entitled to receive adequate compensation. As a result of Cooper's infringement of the '482 patent, Acuity is entitled to damages adequate to compensate it for the infringement, but in no event less than a reasonable royalty.

58. On information and belief, Cooper's infringement of the '482 patent has been willful and deliberate.

59. Cooper's infringement of the '482 patent will continue to cause Acuity irreparable injury unless Cooper is enjoined by this Court.

COUNT NINE
(Infringement of the '483 Patent)

60. Acuity incorporates paragraphs 1 through 59 by reference as though fully set forth herein.

61. Cooper is infringing, inducing the infringement of and/or contributorily infringing the '483 patent in violation of 35 U.S.C. § 271, by making, using, selling, and/or offering for sale in the United States light fixtures covered by the '483 patent, including light fixtures that are part of Cooper's accord™ series of fixtures.

62. Cooper's infringement of the '483 patent has caused Acuity substantial injury for which Acuity is entitled to receive adequate compensation. As a result of Cooper's infringement of the '483 patent, Acuity is entitled to damages adequate to compensate it for the infringement, but in no event less than a reasonable royalty.

63. On information and belief, Cooper's infringement of the '483 patent has been willful and deliberate.

64. Cooper's infringement of the '483 patent will continue to cause Acuity irreparable injury unless Cooper is enjoined by this Court.

COUNT TEN
(Infringement of the '991 Patent)

65. Acuity incorporates paragraphs 1 through 64 by reference as though fully set forth herein.

66. Cooper is infringing, inducing the infringement of and/or contributorily infringing the '991 patent in violation of 35 U.S.C. § 271, by making, using, selling, and/or offering for sale in the United States light fixtures covered by the '991 patent, including light fixtures that are part of Cooper's accord™ series of fixtures.

67. Cooper's infringement of the '991 patent has caused Acuity substantial injury for which Acuity is entitled to receive adequate compensation. As a result of Cooper's infringement of the '991 patent, Acuity is entitled to damages adequate to compensate it for the infringement, but in no event less than a reasonable royalty.

68. On information and belief, Cooper's infringement of the '991 patent has been willful and deliberate.

69. Cooper's infringement of the '991 patent will continue to cause Acuity irreparable injury unless Cooper is enjoined by this Court.

COUNT ELEVEN
(Infringement of the '5,992 Patent)

70. Acuity incorporates paragraphs 1 through 69 by reference as though fully set forth herein.

71. Cooper is infringing, inducing the infringement of and/or contributorily infringing the '5,992 patent in violation of 35 U.S.C. § 271, by making, using, selling, and/or offering for sale in the United States light fixtures covered by the '5,992 patent, including light fixtures that are part of Cooper's accord™ series of fixtures.

72. Cooper's infringement of the '5,992 patent has caused Acuity substantial injury for which Acuity is entitled to receive adequate compensation. As a result of Cooper's infringement of the '5,992 patent, Acuity is entitled to damages adequate to compensate it for the infringement, but in no event less than a reasonable royalty.

73. On information and belief, Cooper's infringement of the '5,992 patent has been willful and deliberate.

74. Cooper's infringement of the '5,992 patent will continue to cause Acuity irreparable injury unless Cooper is enjoined by this Court.

COUNT TWELVE
(Infringement of the '5,993 Patent)

75. Acuity incorporates paragraphs 1 through 74 by reference as though fully set forth herein.

76. Cooper is infringing, inducing the infringement of and/or contributorily infringing the '5,993 patent in violation of 35 U.S.C. § 271, by making, using, selling, and/or offering for sale in the United States light fixtures covered by the '5,993 patent, including light fixtures that are part of Cooper's accord™ series of fixtures.

77. Cooper's infringement of the '5,993 patent has caused Acuity substantial injury for which Acuity is entitled to receive adequate compensation. As a result of Cooper's infringement of the '5,993 patent, Acuity is entitled to damages adequate to compensate it for the infringement, but in no event less than a reasonable royalty.

78. On information and belief, Cooper's infringement of the '5,993 patent has been willful and deliberate.

79. Cooper's infringement of the '5,993 patent will continue to cause Acuity irreparable injury unless Cooper is enjoined by this Court.

PRAYER FOR RELIEF

WHEREFORE, Acuity prays that this Court:

A. Declare that Cooper infringes and has infringed the patents in suit;

B. Grant preliminary and permanent injunctive relief prohibiting Cooper, its officers, agents, servants, employees and attorneys, and those persons in active concert or participation with them, from further infringement of the patents in suit;

C. Award Acuity damages adequate to compensate it for Cooper's infringement, including damages pursuant to 35 U.S.C. § 289, together with interest as fixed by the Court;

D. Award Acuity treble damages for Cooper's willful infringement;

E. Declare this case exceptional pursuant to 35 U.S.C. § 285 and award Acuity its costs and reasonable attorneys' fees; and

E. Grant Acuity such further relief as the Court deems just and proper.

DEMAND FOR JURY TRIAL

Pursuant to Fed. R. Civ. P. 38, Acuity demands trial by jury of all issues triable of right by a jury.

MORRIS, NICHOLS, ARSHT & TUNNELL LLP

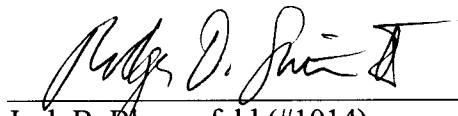

Jack B. Blumenfeld (#1014)
Rodger D. Smith II (#3778)
Leslie A. Polizoti (#4299)
1201 N. Market Street
P.O. Box 1347
Wilmington, DE 19899
(302) 658-9200
Attorneys for Plaintiffs Acuity Brands, Inc. and Acuity Brands Lighting, Inc.

July 17, 2007
912557

EXHIBIT A

US007229192B2

(12) **United States Patent**
Mayfield, III et al.

(10) **Patent No.: US 7,229,192 B2**
(45) **Date of Patent: Jun. 12, 2007**

(54) **LIGHT FIXTURE AND LENS ASSEMBLY FOR SAME**

(75) Inventors: **John T. Mayfield, III**, Loganville, GA (US); **Stephen H. Lydecker**, Snellville, GA (US); **Gary D. Trott**, Eatonton, GA (US); **Carl T. Gould**, Boulder, CO (US); **Kevin Leadford**, Evergreen, CO (US); **Christopher L. Sharp**, Conyers, GA (US)

(73) Assignee: **Acuity Brands, Inc.**, Atlanta, GA (US)

(*) Notice: Subject to any disclaimer, the term of this patent is extended or adjusted under 35 U.S.C. 154(b) by 78 days.

(21) Appl. No.: **10/970,615**

(22) Filed: **Oct. 21, 2004**

(65) **Prior Publication Data**

US 2005/0281024 A1 Dec. 22, 2005

Related U.S. Application Data

(60) Provisional application No. 60/580,996, filed on Jun. 18, 2004.

(51) **Int. Cl.**
F21S 4/00 (2006.01)

(52) **U.S. Cl.** **362/223**; 362/328; 362/340; 362/347

(58) **Field of Classification Search** 362/223, 362/224, 225, 260, 328, 330, 335, 338, 347, 362/29, 327, 340, 217
See application file for complete search history.

(56) **References Cited**

U.S. PATENT DOCUMENTS

1,900,551	A *	3/1933	Guth	362/348
2,852,663	A	9/1958	Stuffer et al.	240/51.11
3,265,887	A	8/1966	Wince	
3,838,268	A	9/1974	Fabbri	240/9
4,135,228	A *	1/1979	Lones	362/18
4,229,785	A *	10/1980	Tuller	362/433
4,317,625	A *	3/1982	Van Allen	396/200
4,498,126	A *	2/1985	Hernandez	362/220
4,674,015	A *	6/1987	Smith	362/217
4,698,734	A	10/1987	Ngai	362/225
4,799,136	A	1/1989	Molnar	362/300
5,055,976	A *	10/1991	Arai	362/17
5,746,502	A	5/1998	Huang	362/223
D397,819	S	9/1998	Thorton, Jr.	D26/77

(Continued)

OTHER PUBLICATIONS

Lithonia Lighting, an Acuity Brands Company, Direct/Indirect Lighting, pp. 1-15 (2002).

(Continued)

Primary Examiner—Renee Luebke
Assistant Examiner—Gunyoung T. Lee
(74) *Attorney, Agent, or Firm*—Needle & Rosenberg, P.C.

(57) **ABSTRACT**

A light fixture or troffer for directing light emitted from a light source toward an area to be illuminated, including a reflector assembly within which the light source is positioned and a lens assembly detachably secured to a portion of the reflector assembly such that a lens of the lens assembly overlies the light source and such that substantially all of the light emitted from the light source passes through the lens assembly. In one example, the lens includes a curved prismatic surface that can be oriented toward or away from the underlying light source.

90 Claims, 15 Drawing Sheets

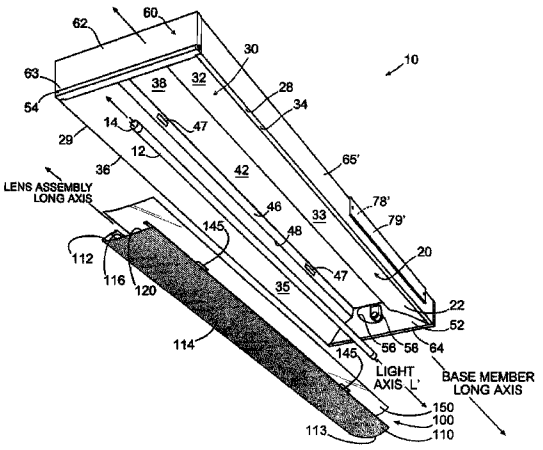

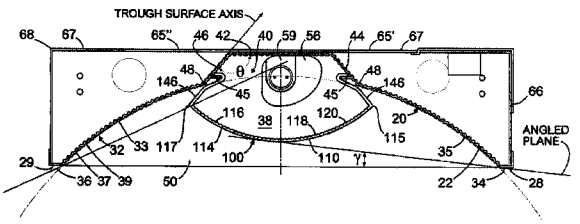

U.S. PATENT DOCUMENTS

5,971,571	A	10/1999	Rose	362/346
5,988,829	A	11/1999	Holder	362/217
5,988,836	A	11/1999	Swarens	362/364
6,062,704	A *	5/2000	Holder	362/223
6,102,550	A	8/2000	Edwards, Jr.	362/221
D440,341	S	4/2001	Arumugasaamy	D26/85
6,238,065	B1	5/2001	Jones	362/339
6,280,052	B1	8/2001	White	362/225
6,419,375	B1	7/2002	Leadford et al.	362/297
D461,267	S	8/2002	Arumugasaamy	D26/85
6,454,442	B1	9/2002	Changaris	362/297
6,485,166	B1	11/2002	Fouke	362/340
D467,676	S	12/2002	Packer et al.	D26/72
D467,677	S	12/2002	Ries et al.	D26/88
6,505,953	B1	1/2003	Dahlen	362/217
6,505,959	B2	1/2003	Masaki et al.	362/339
6,530,681	B2	3/2003	Sieczkowski	362/404
6,537,649	B1	3/2003	Martin et al.	428/172
D472,665	S	4/2003	Herst et al.	D26/113
D472,666	S	4/2003	Herst et al.	D26/113
D472,667	S	4/2003	Herst et al.	D26/113
D472,668	S	4/2003	Herst et al.	D26/113
D473,007	S	4/2003	Herst et al.	D26/113
D473,335	S	4/2003	Brohard et al.	D26/113
6,540,382	B1	4/2003	Simon	362/339
D477,891	S	7/2003	Fritze et al.	D26/74
D480,168	S	9/2003	Herst et al.	D26/77
D480,172	S	9/2003	Herst et al.	D26/121
6,612,718	B1	9/2003	Packer et al.	362/267
6,612,723	B2	9/2003	Futhey et al.	362/339
D480,500	S	10/2003	Herst et al.	D26/121
D480,501	S	10/2003	Herst et al.	D26/121
D480,502	S	10/2003	Herst et al.	D26/121
D480,503	S	10/2003	Herst et al.	D26/121
D480,530	S	10/2003	Herst et al.	121/77
D480,830	S	10/2003	Sieczkowski	D26/118
D481,488	S	10/2003	Herst et al.	D26/121
D481,489	S	10/2003	Cline et al.	D26/128
6,637,912	B2	10/2003	Arumugasaamy et al.	362/327
D481,820	S	11/2003	Watt	D26/77
6,652,118	B2	11/2003	Shemitz et al.	362/225
D483,510	S	12/2003	Fritze et al.	D26/75
6,655,819	B2	12/2003	Loga et al.	362/263
D485,932	S	1/2004	Crane	D26/76
D487,527	S	3/2004	Sieczkowski	D26/76
6,709,131	B1	3/2004	Herst et al.	362/223
6,726,345	B2	4/2004	Arumugusaamy et al.	362/327
6,758,580	B1 *	7/2004	Verfuerth	362/241
6,964,502	B1 *	11/2005	Verfuerth	362/296
2002/0080615	A1	6/2002	Marshall et al.	362/333

OTHER PUBLICATIONS

Lithonia Lighting, an Acuity Brands Company, Avante Recessed Direct/Indirect Lighting, pp. 1-3 (1997).
Lithonia Lighting, an Acuity Brands Company, Architectural Fluorescent Recessed Direct/Indirect Lighting, pp. 1-13 (1999).
Genlyte/Thomas, Lightolier, Alter Soft Lights, pp. 1-67 (2003).
Cooper Lighting, Metalux, p. 1-8 (1999).
Columbia Lighting, Stratus, pp. 1-9, (1998).
Focal Point, Luna, pp. 1-5 (1997).
Lithonia Lighting, an Acuity Brands Company, Product Selection Guide, 8th Edition, pp. 1-620 (2003).
Peerless-Lighting, Parallels, pp. 1-2 (2005).
Lithonia Lighting, an Acuity Brands Company, Avante, Recessed Direct/Indirect Lighting, pp. 1-4 (1996).
Lithonia Lighting, an Acuity Brands Company, Avante, Direct/Indirect General Lighting System, pp. 1-2 (1995).
Lightolier, CFI Fluorescent, Alter Soft Lights, 1-8 (1996).
Sylvania Lighting International, Neuheiten/News, pp. 1-6.
Alter, pp. 1-6 (1994).
Lithonia Lighting, an Acuity Brands Company, Product Selection Guide, 8th ed. p. 14-93, 112-115, no date.
PURE FX,™ by Ledalite Architectural Products, a Genlyte Company, pp. 1-15, no date.

* cited by examiner

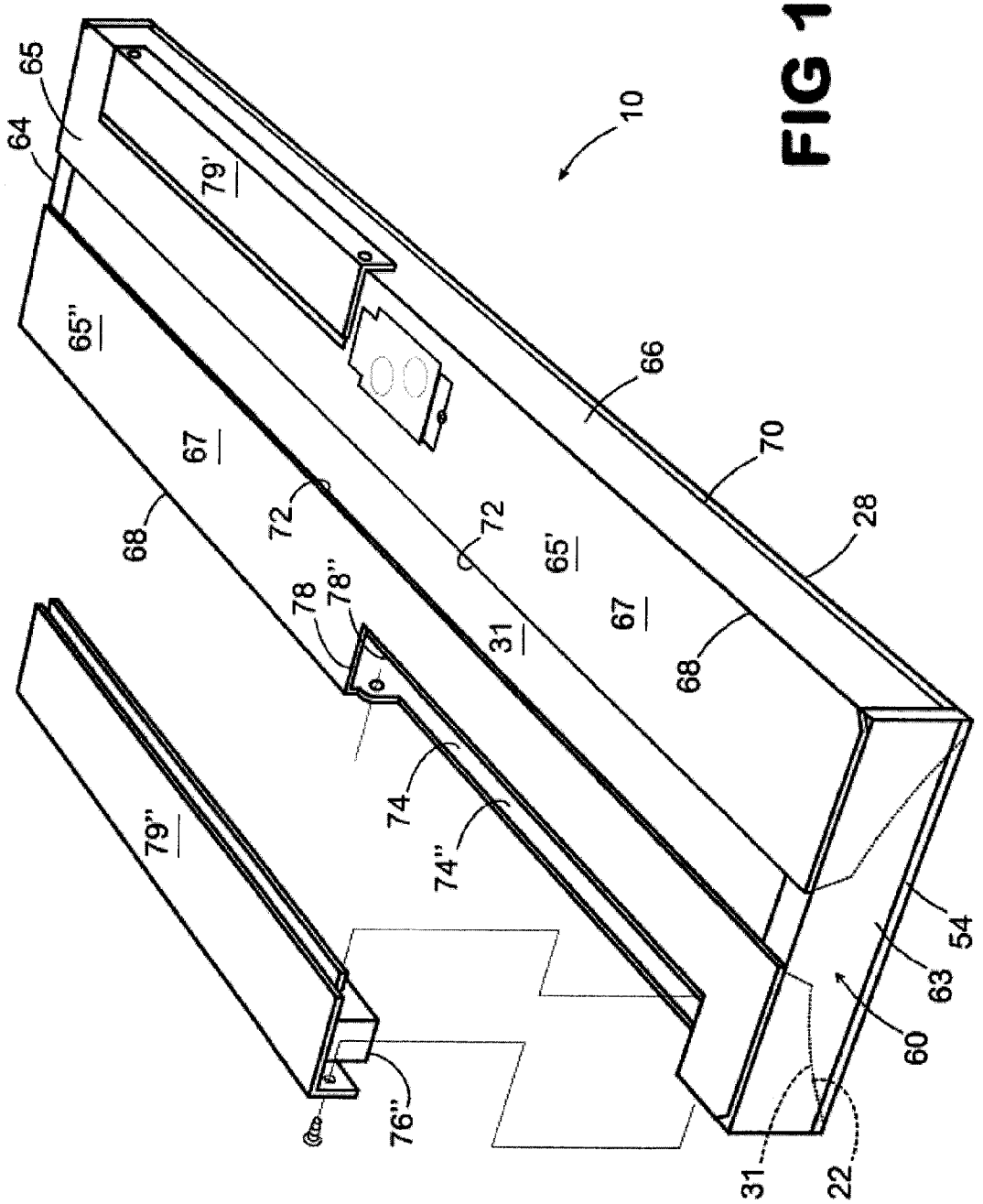
10
64
65
79'
65''
67
68
72
72
65'
67
68
66
70
28
78
78''
31
74
74''
79''
76''
54
63
60
31
22

FIG 1

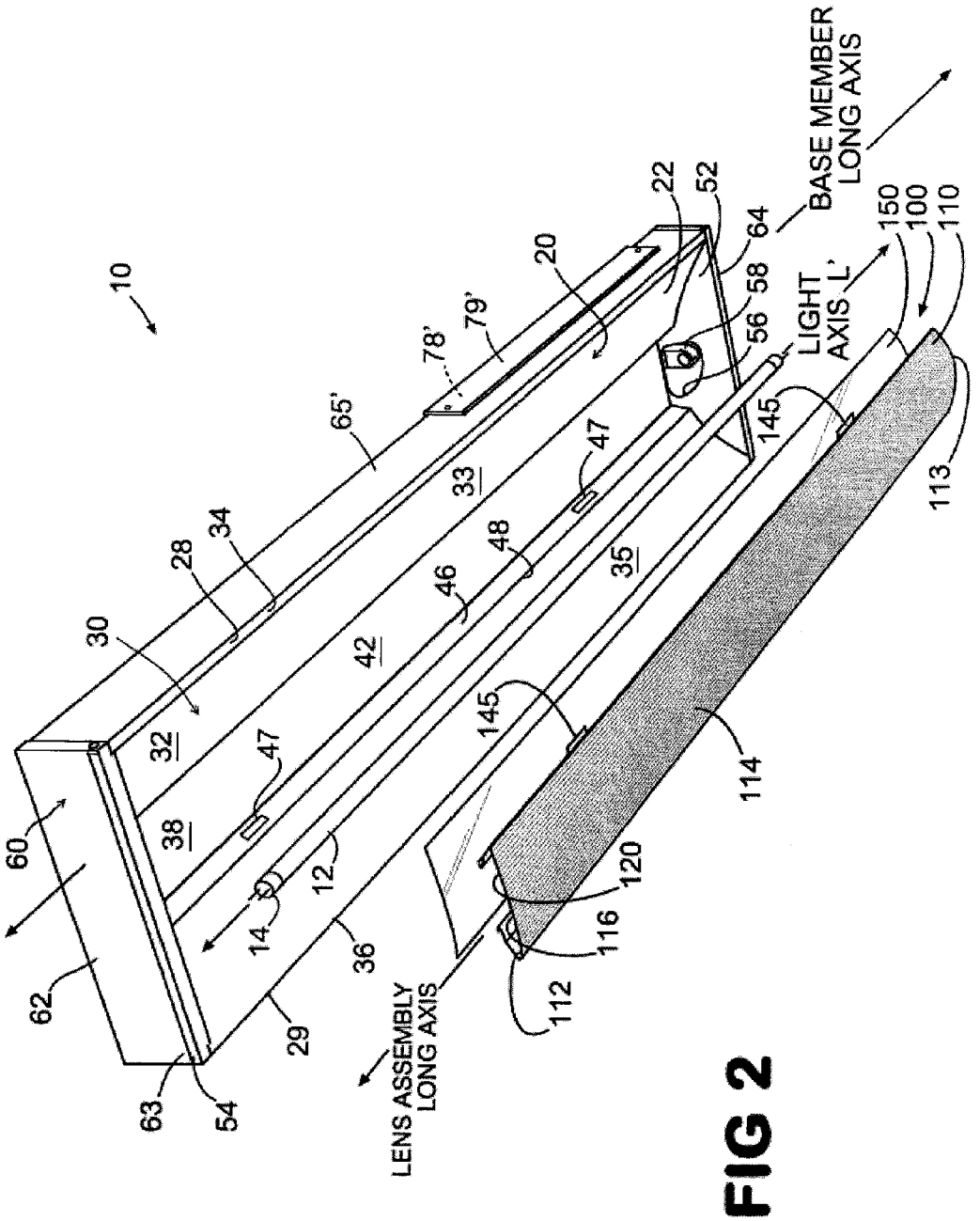
10
20
22
52
64
58
56
BASE MEMBER LONG AXIS
LIGHT AXIS L'
150
100
110
113
145
47
48
46
42
35
33
34
28
30
32
38
60
62
63
54
29
36
14
12
114
120
116
112
LENS ASSEMBLY LONG AXIS
65'
78'
79'

FIG 2

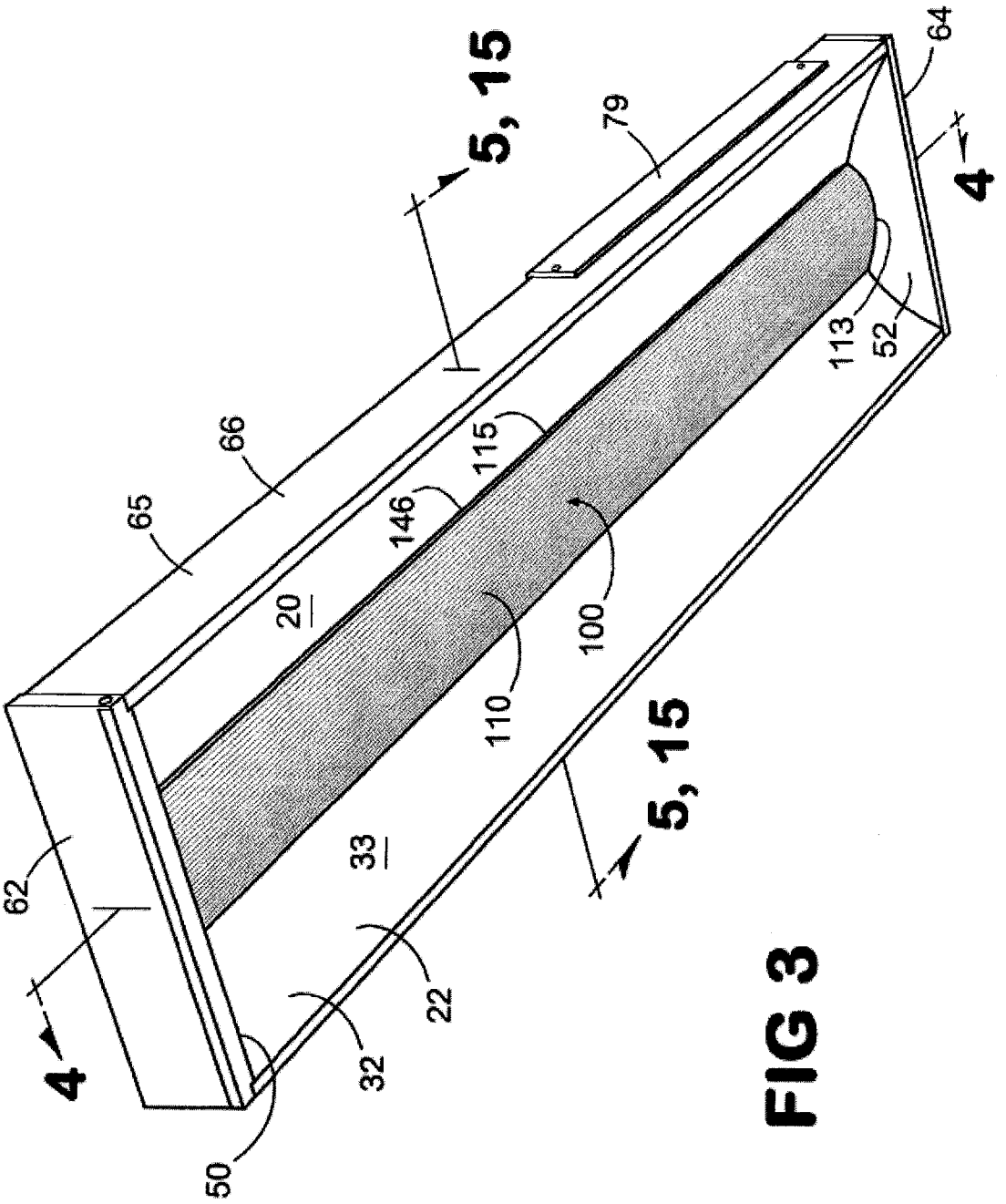

FIG 3

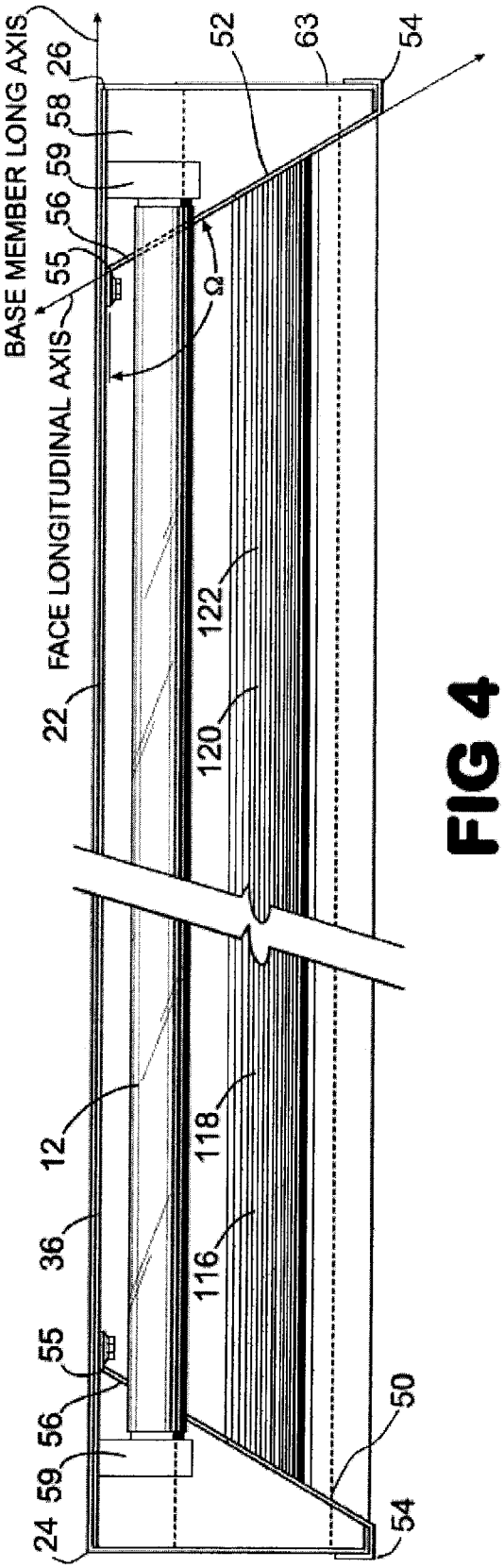
BASE MEMBER LONG AXIS
FACE LONGITUDINAL AXIS
Ω
26
58
59
56
55
22
12
36
24
52
63
54
122
120
118
116
50

FIG 4

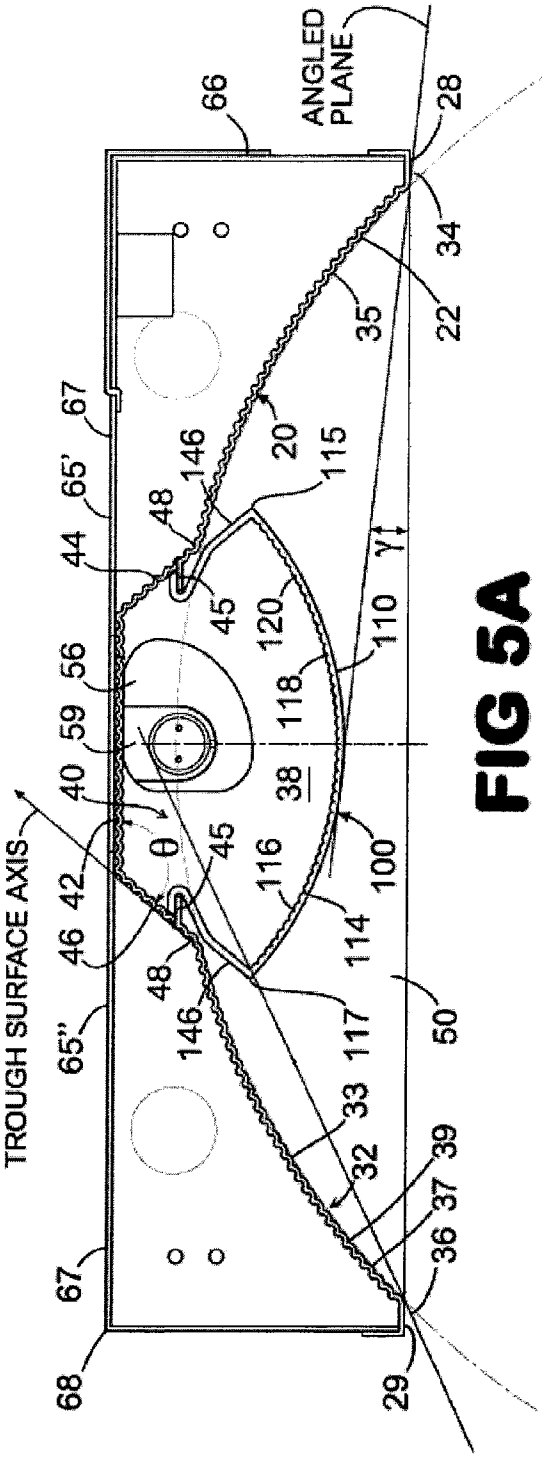
ANGLED PLANE
TROUGH SURFACE AXIS
θ
γ
66
28
34
22
35
20
115
146
48
65'
67
44
45
120
110
118
56
59
40
38
42
46
65''
116
114
100
50
117
33
32
39
37
36
29
68

FIG 5A

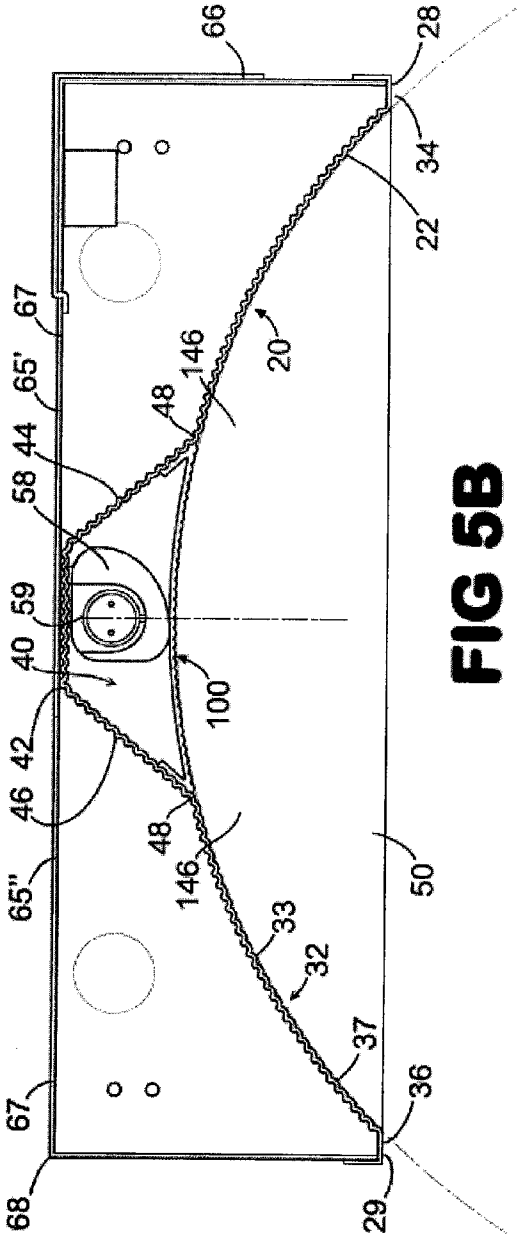
66
28
34
22
67
65'
146
48
20
44
58
59
40
100
42
46
48
146
65''
33
32
50
37
36
67
68
29

FIG 5B

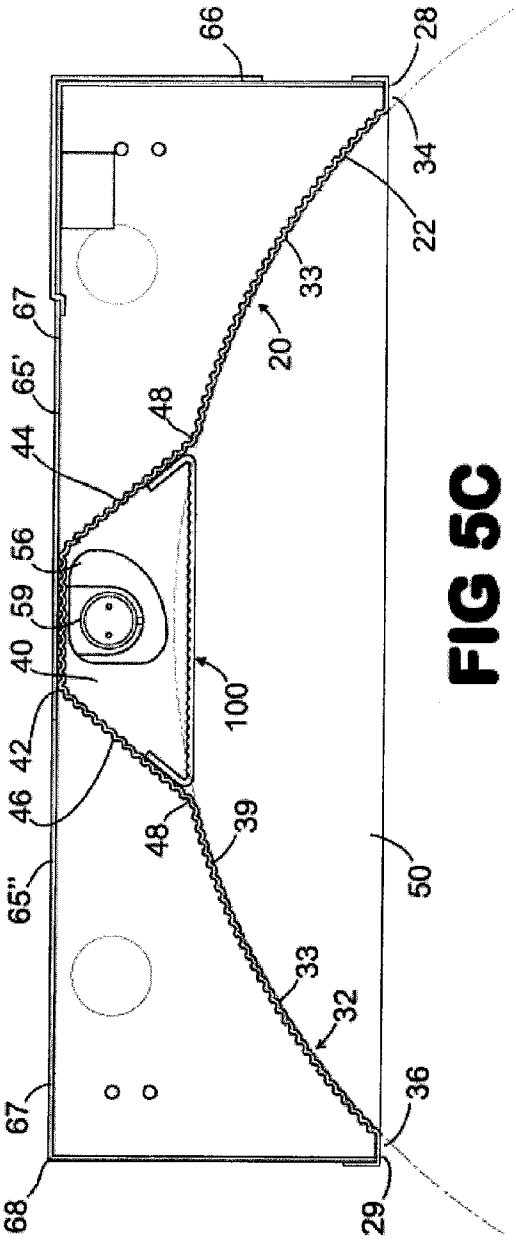
66
28
34
22
33
67
65'
48
20
44
56
59
40
100
42
46
48
39
65''
50
33
32
36
67
68
29

FIG 5C

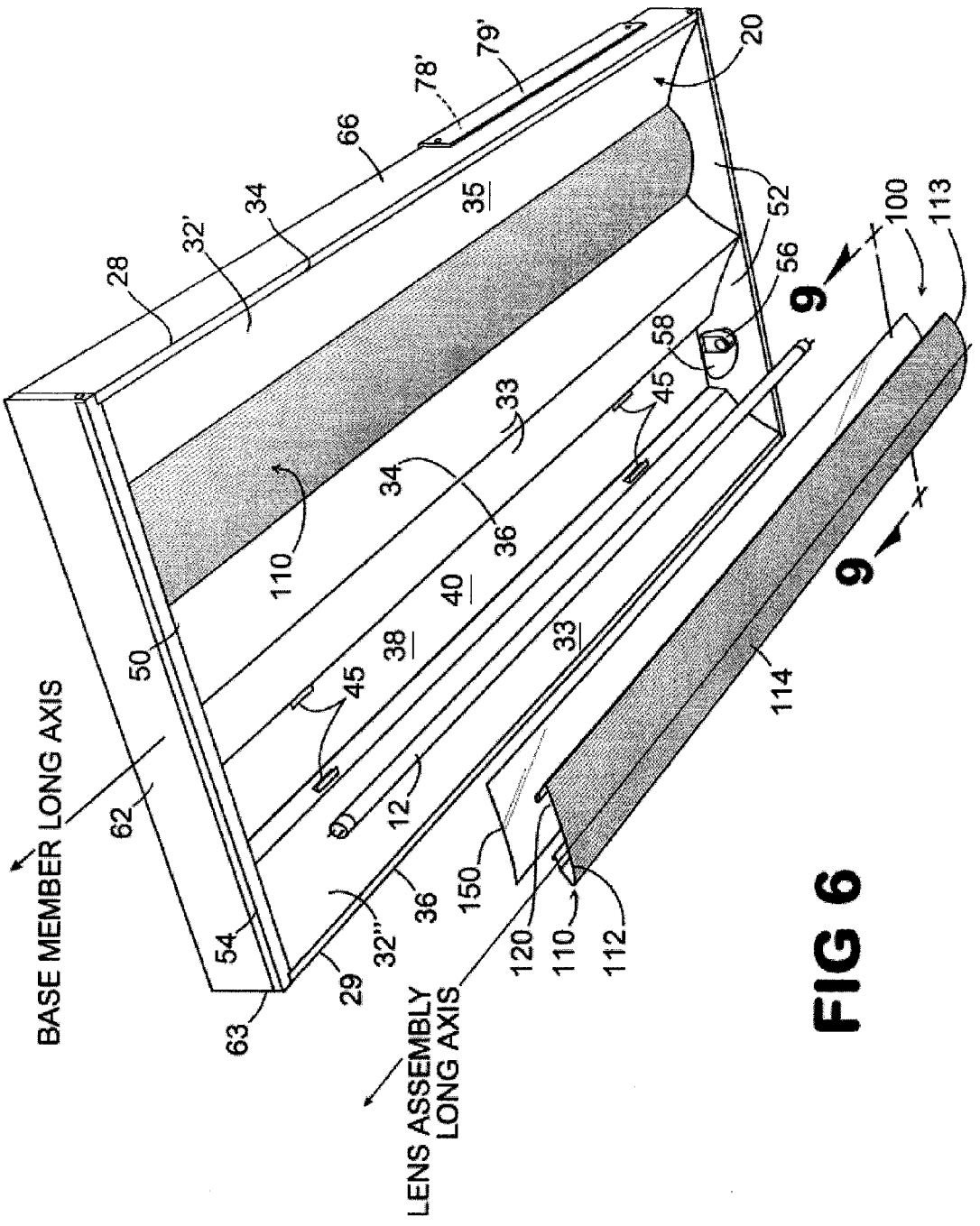
BASE MEMBER LONG AXIS
LENS ASSEMBLY LONG AXIS
20
28
32'
34
66
78'
79'
35
52
56
58
45
33
34
36
110
40
38
33
50
45
62
12
54
63
29
32''
36
150
120
110
112
114
100
113
9
9

FIG 6

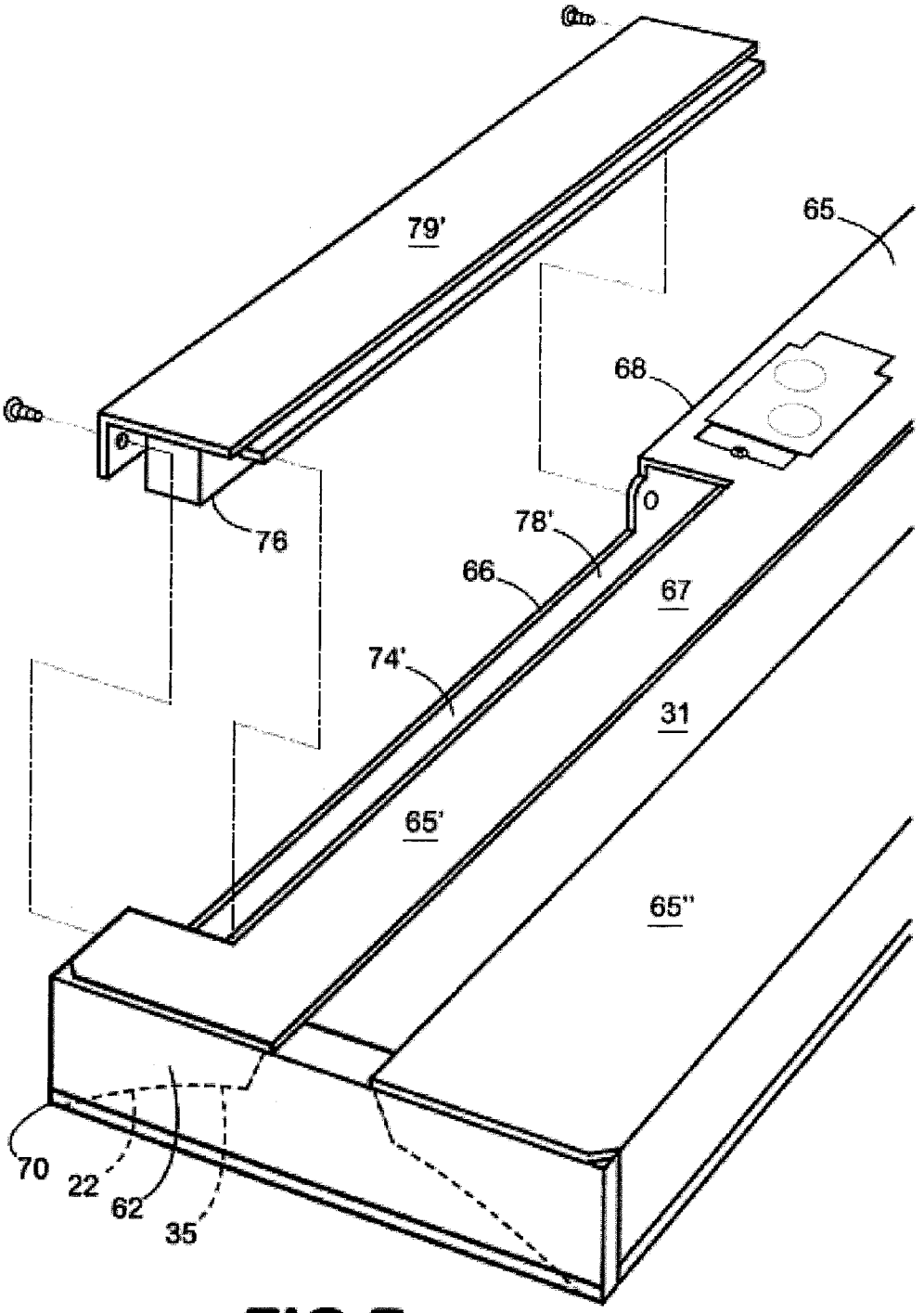

FIG 7

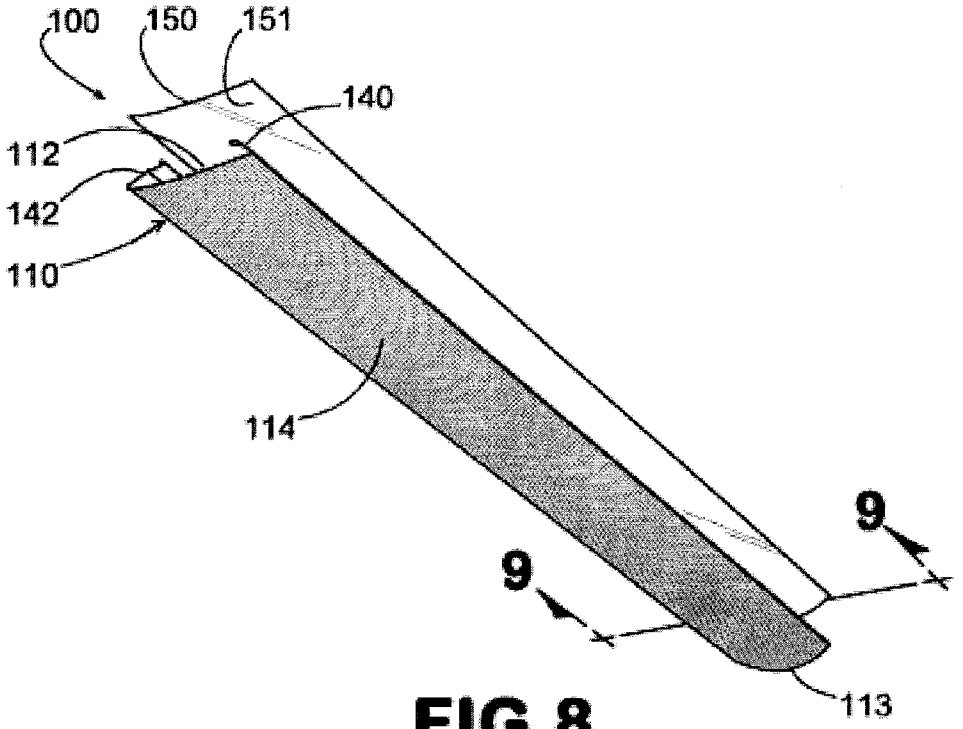
100
150
151
140
112
142
110
114
9
9
113

FIG 8

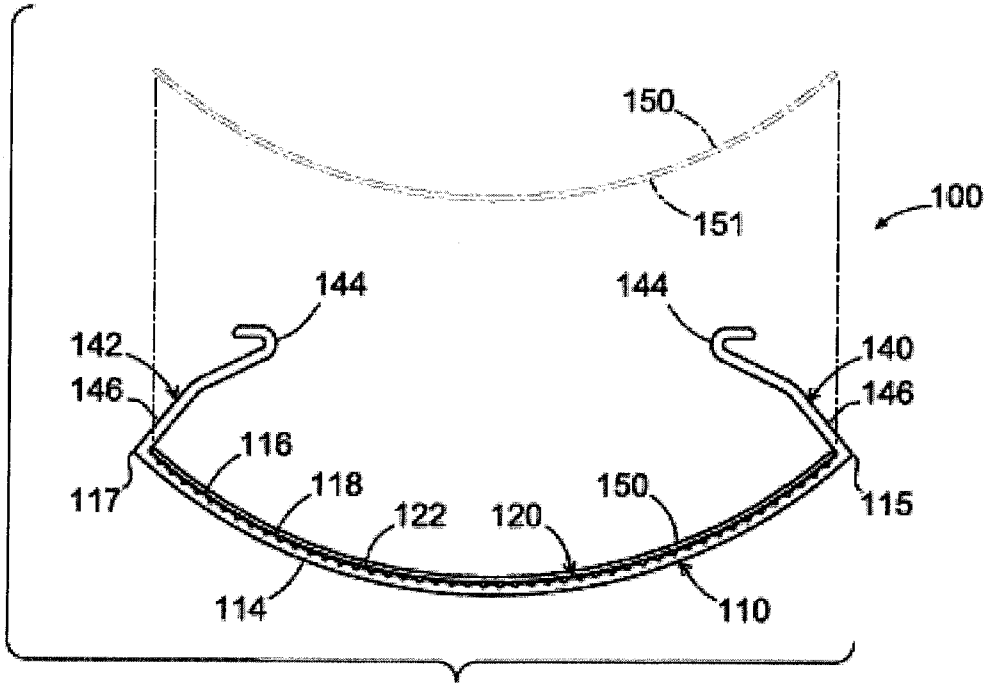
150
151
100
144
144
142
146
140
146
116
117
118
122
120
150
115
114
110

FIG 9

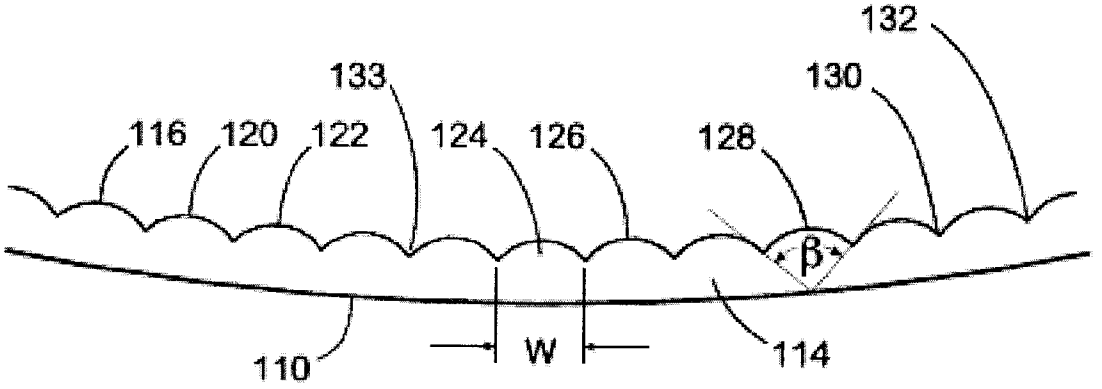

FIG 10

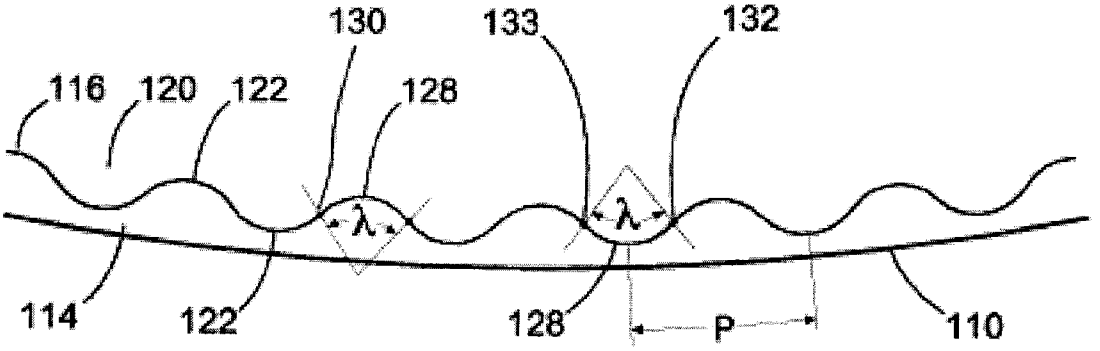

FIG 11

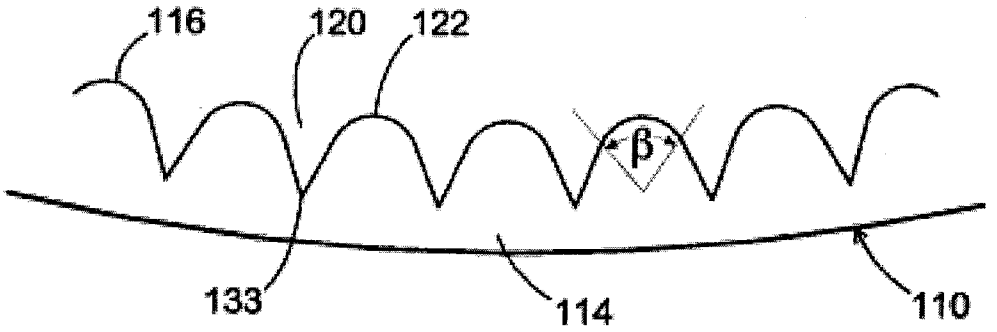

FIG 12

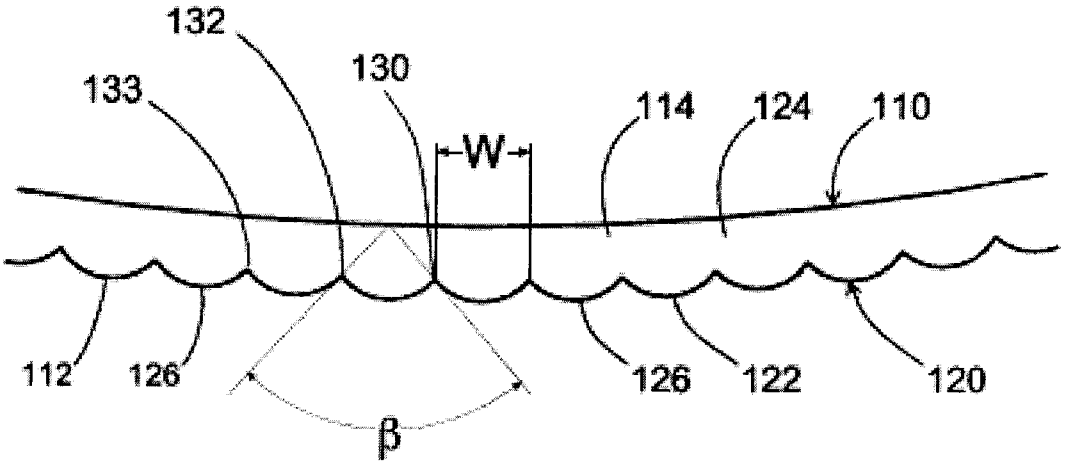
132
133
130
W
114
124
110
112
126
126
122
120
β

FIG 13

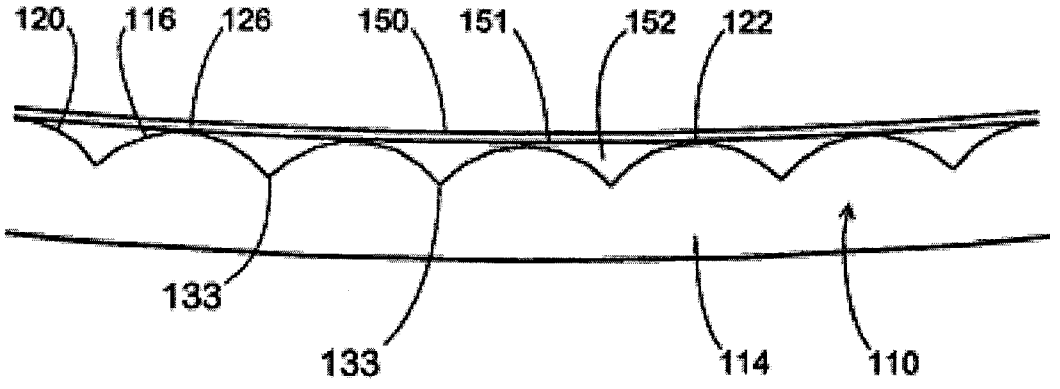
120
116
126
150
151
152
122
133
133
114
110

FIG 14

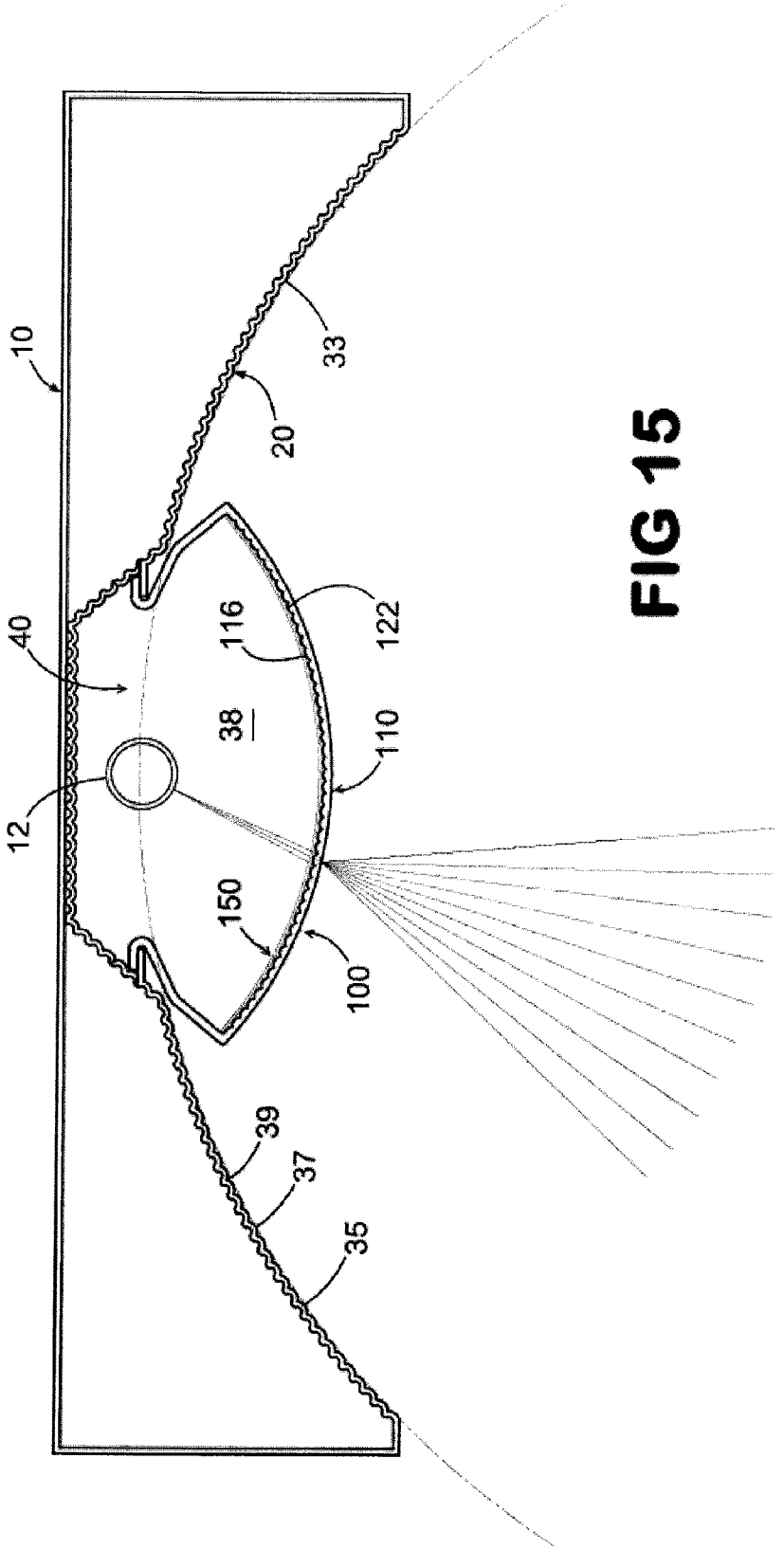

FIG 15

Input Watts 85 Luminous Dimensions Length: 3.7' x Width 1.7' x Height 0.0'

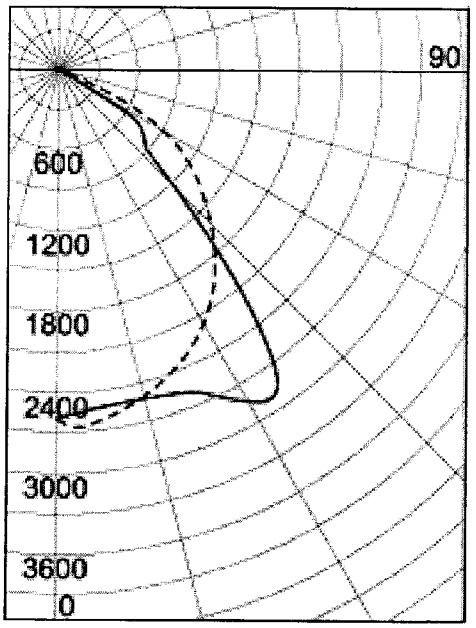

Quadralaterally Symmetric
Dashed=0 Solid=90

CANDLEPOWER SUMMARY

Angle	0	22.5	45	67.5	90	Lumens
0	2612	2612	2612	2612	2612	
5	2666	2650	2607	2572	2558	249
10	2615	2622	2599	2582	2556	
15	2550	2568	2574	2583	2574	729
20	2467	2495	2534	2572	2578	
25	2364	2413	2484	2580	2629	1154
30	2239	2310	2444	2720	2836	
35	2099	2191	2467	2467	2978	1579
40	1928	2050	2491	2858	2521	
45	1745	1906	2343	2674	1457	1469
50	1526	1741	1707	1736	906	
55	1284	1499	958	953	823	962
60	1003	1100	604	780	581	
65	619	561	342	574	180	378
70	126	130	107	220	34	
75	40	32	25	43	17	28
80	18	15	13	19	8	
85	6	6	5	2	1	5
90	0	0	0	0	0	

ZONAL LUMEN SUMMARY

Zone	Lumens	% Lamp	% Luminaire
0 - 30	2132	24.5	32.5
0 - 40	3711	42.7	56.6
0 - 60	6142	70.6	93.7
60 - 90	409	4.5	6.3
0 - 90	6552	75.3	100.0
90 -180	0	0.0	0.0
0 -180	6552	75.3	100.0

Luminaire Efficiency: 75.3%

CIE Classification: Direct

Spacing Criterion (0%): 1.3
Spacing Criterion (90%): 1.6

AVERAGE LUMINANCE
(Candelas/ Sq. Meter)

Angle	0	45	90
0	4320	4320	4320
45	4082	5481	3408
55	3703	2763	2373
65	2423	1333	704
75	256	160	109
85	114	95	19

(PRIOR ART)

FIG 16

CANDELA DISTRIBUTION

Angle	0	22.5	45	67.5	90	90	Lumens
0	1690	1690	1690	1690	1690	1690	
5	1710	1695	1681	1673	1670	1685	160
10	1690	1678	1668	1669	1665	1673	
15	1854	1644	1642	1647	1643	1645	464
20	1598	1591	1598	1610	1609	1601	
25	1528	1524	1541	1559	1561	1542	710
30	1434	1436	1461	1488	1493	1462	
35	1324	1333	1372	1405	1416	1370	855
40	1197	1211	1263	1308	1234	1261	
45	1060	1078	1148	1209	1136	1146	884
50	905	936	1031	1106	1036	1024	
55	743	794	911	1004	924	900	805
60	580	658	792	894	714	774	
65	436	524	674	731	486	626	616
70	310	400	526	506	456	456	
75	203	282	323	288	264	282	299
80	106	156	149	107	90	127	
85	34	40	23	21	20	28	44
90	0	0	0	0	0	0	

ZONAL LUMEN SUMMARY

Zone	Lumens	% Lamp	% Fixture
0 - 30	1334.4	24.3	27.6
0 - 40	2189.7	40.0	45.3
0 - 60	3878.6	70.8	80.2
0 - 90	4836.0	88.3	100.0
90 -180	0.0	0.0	0.0
0 -180	48.38	88.3	100.0

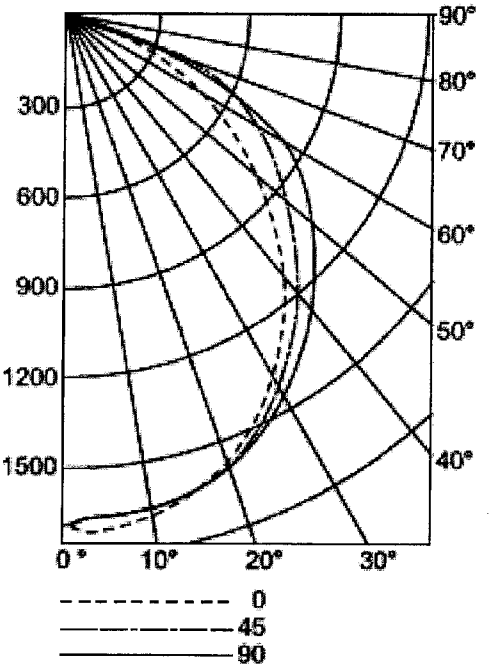

LUMINAIRE EFFICIENCY: 88.3%

CIE CLASSIFICATION: Direct

SPACING CRITERIA (0-Deg): 1.3
SPACING CRITERIA (90-Deg): 1.3

FIG 17

AVERAGE LUMINANCE (cd/m2)

Angle	0	45	90
45	2127	2304	2476
55	1838	2254	2563
65	1464	2263	2397
75	1113	1771	1447
85	554	374	326

Calculations based on IES File Luminous Area:
23.28 in. W x 46.92 in. L x 0.0 in. H

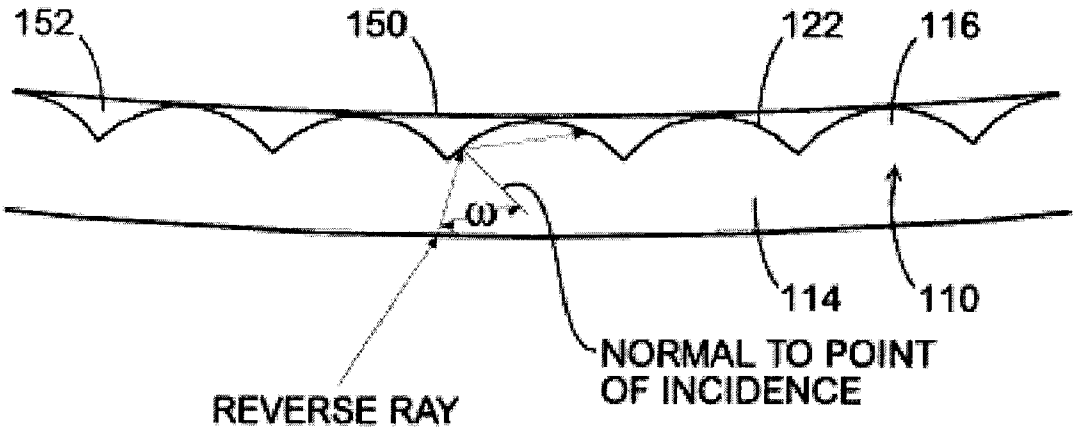
152
150
122
116
ω
114
110
NORMAL TO POINT OF INCIDENCE
REVERSE RAY

FIG 18

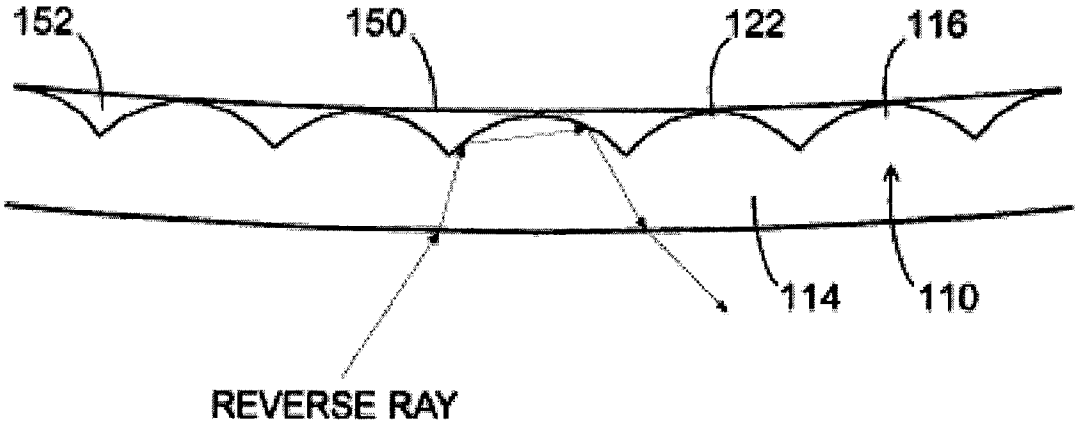
152
150
122
116
114
110
REVERSE RAY

FIG 19

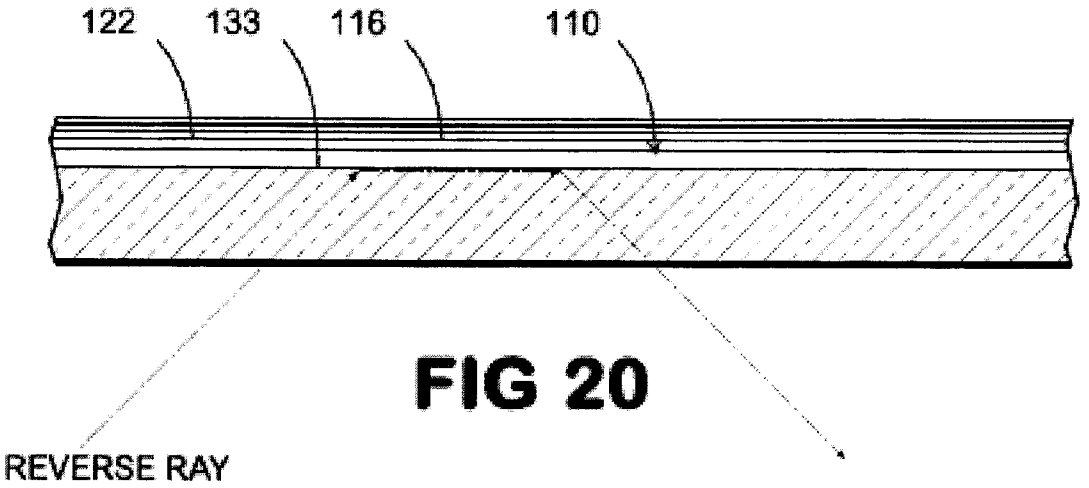
122
133
116
110
REVERSE RAY

FIG 20

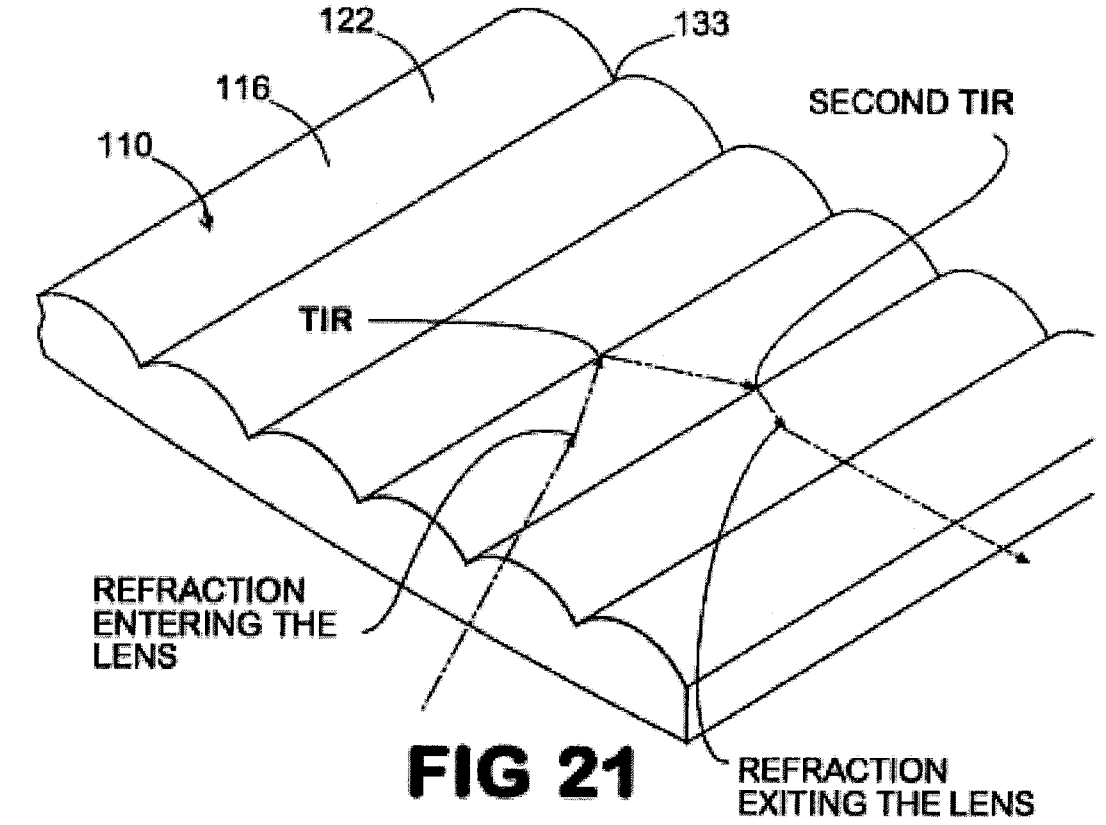
122
133
116
110
SECOND TIR
TIR
REFRACTION ENTERING THE LENS
REFRACTION EXITING THE LENS

FIG 21

LIGHT FIXTURE AND LENS ASSEMBLY FOR SAME

This application claims priority to and the benefit of U.S. Provisional Application No. 60/580,996, entitled "Light Fixture and Lens Assembly for Same," filed on Jun. 18, 2004, which is incorporated in its entirety in this document by reference.

BACKGROUND OF THE INVENTION

1. Field of the Invention

The present invention generally relates to light fixtures for illuminating architectural spaces. The invention has particular application in light fixtures using fluorescent lamps, such as the T5 linear fluorescent lamp, as the light source.

2. Background Art

Numerous light fixtures for architectural lighting applications are known. In the case of fixtures that provide direct lighting, the source of illumination may be visible in its entirety through an output aperture of the light fixture or shielded by elements such as parabolic baffles or lenses. A light fixture presently used in a typical office environment comprises a troffer with at least one fluorescent lamp and a lens having prismatic elements for distributing the light. Also known are light fixtures that use parabolic reflectors to provide a desired light distribution. The choice of light fixture will depend on the objectives of the lighting designer for a particular application and the economic resources available. To meet his or her design objectives, the lighting designer, when choosing a light fixture, will normally consider a variety of factors including aesthetic appearance, desired light distribution characteristics, efficiency, lumen package, maintenance and sources of brightness that can detract from visual comfort and productivity.

An important factor in the design of light fixtures for a particular application is the light source. The fluorescent lamp has long been the light source of choice among lighting designers in many commercial applications, particularly for indoor office lighting. For many years the most common fluorescent lamps for use in indoor lighting have been the linear T8 (1 inch diameter) and the T12 (1½ inch diameter). More recently, however, smaller diameter fluorescent lamps have become available, which provide a high lumen output from a comparatively small lamp envelope. An example is the linear T5 (⅝ inch diameter) lamp manufactured by Osram/Sylvania and others. The T5 has a number of advantages over the T8 and T12, including the design of light fixtures that provide a high lumen output with fewer lamps, which reduces lamp disposal requirements and has the potential for reducing overall costs. The smaller-diameter T5 lamps also permit the design of smaller light fixtures.

Some conventional fluorescent lamps, however, have the significant drawback in that the lamp surface is bright when compared to a lamp of larger diameter. For example, a conventional T5 lamp can have a surface brightness in the range of 5,000 to 8,000 footlamberts (FL), whereas the surface brightness of the larger T8 and T12 lamps generally is about 3,000 FL and 2,000 FL, respectively (although there are some versions of linear T8 and T12 lamps with higher brightness). The consequence of such bright surfaces is quite severe in applications where the lamps may be viewed directly. Without adequate shielding, fixtures employing such lamps are very uncomfortable and produce direct and reflected glare that impairs the comfort of the lighting environment. Heretofore, opaque shielding has been devised to cover or substantially surround a fluorescent lamp to

mitigate problems associated with light sources of high surface brightness; however, such shielding defeats the advantages of a fluorescent lamp in regions of distribution where the lamp's surfaces are not directly viewed or do not set up reflected glare patterns. Thus, with conventional shielding designs, the distribution efficiencies and high lumen output advantages of the fluorescent lamp can be substantially lost.

A further disadvantage to traditional parabolic and prismatic troffers is the presence of distracting dynamic changes in brightness level and pattern as seen by a moving observer in the architectural space. Additionally, traditional parabolic and prismatic troffers allow direct or only slightly obscured views of the lamp source(s)) at certain viewing angles (low angles for both the parabolic and prismatic and most transverse angle for prismatic). This unaesthetic condition is remedied by indirect and direct-indirect fixture designs, but typically with a significant loss of efficiency.

Another known solution to the problem of direct glare associated with the use of high brightness fluorescent lamps is the use of biax lamps in direct-indirect light fixtures. This approach uses high brightness lamps only for the uplight component of the light fixture while using T-8 lamps with less bright surfaces for the light fixture's down-light component. However, such design approaches have the drawback that the extra lamps impair the designer's ability to achieve a desired light distribution from a given physical envelope and impose added burdens on lamp maintenance providers who must stock and handle two different types of lamps.

Conventional parabolic light fixture designs have several negative features. One of these is reduced lighting efficiency. Another is the so-called "cave effect," where the upper portions of walls in the illuminated area are dark. In addition, the light distribution of these fixtures often creates a defined line on the walls between the higher lit and less lit areas. This creates the perception of a ceiling that is lower than it actually is. Further, when viewed directly at high viewing angles, a conventional parabolic fixture can appear very dim or, even, off.

The present invention overcomes the above-described disadvantages of light fixtures using brighter light sources by providing a configuration that appears to a viewer as though it has a source of lower brightness, but which otherwise permits the light fixture to advantageously and efficiently distribute light generated by the selected lamp, such as the exemplified T5 lamp. The light fixture of the present invention reduces distracting direct glare associated with high brightness light sources used in direct or direct-indirect light fixtures. This reduction in glare is accomplished without the addition of lamps and the added costs associated therewith.

SUMMARY OF THE INVENTION

The present invention relates to a light fixture, or troffer, for efficiently distributing light emitted by a light source into an area to be illuminated. In one general aspect of the invention, the light fixture includes a reflector assembly that supports the light source. The light fixture may also include a lens assembly positioned with respect to a portion of the reflector assembly to receive light emitted by the light source and distribute it such that glare is further reduced. In a preferred embodiment, the lens assembly receives and distributes substantially all of the light emitted by the light source.

In one aspect, the reflector assembly of the light fixture includes a base member that extends longitudinally between spaced edges along a longitudinal axis. At least a portion of the base member can form a reflective surface, which is preferably a curved reflective surface. In one aspect, the reflector assembly supports the light source such that the longitudinal axis of the light source is substantially parallel to that of the base member. The light source is preferably supported in a recessed portion of the reflector assembly whereby high angle glare in directions transverse to the longitudinal axis of the light fixture is blocked by the lower side edges of the light fixture. The light source can be a conventional lamp, such as, for example, a T5 lamp.

In another aspect, the lens assembly includes a lens that has a first end edge, an opposed second end edge, and a central lens portion that extends longitudinally between the first and second end edges. In one aspect, the lens has a lens longitudinal axis that is generally parallel to the light source longitudinal axis. The central portion of the lens has a prismatic surface that defines a face that can be oriented toward or away from the light source. In one aspect, the central lens portion is curved and can have a concave, convex, or planar shape in cross-section. In an alternative aspect, the lens assembly may include a diffuser inlay that is positioned in substantially overlying registration with a portion of the face of the central lens portion that faces the light source.

In one embodiment, the prismatic surface of the central lens portion is concave relative to the light source. At least a portion of the prismatic surface defines an array of contiguous and parallel prismatic elements. In one example, each prismatic element extends generally longitudinally and substantially between the first and second edges of the lens. In one example, the prismatic elements each have a curved surface that subtends an angle, in a transverse vertical plane, of about and between 80° to 120° with respect to their center of curvature.

The lens is preferably detachably secured to a portion of the reflector assembly in overlying registration with the light source. In one aspect, a portion of the reflector assembly and a portion of the lens substantially enclose the light source so that, to an external viewer, the light source is substantially hidden from view. In one example, the array of linear extending prismatic elements presents to the external viewer an array of spaced, longitudinally extending shadows, or dark stripes, on the lens. Thus, the lens assembly of the present invention provides an aesthetically more pleasing appearance as well as efficiently distributing the light generated by the light source onto portions of the reflective surfaces of the reflector assembly and onto the desired area to be illuminated.

The lens assembly and reflector assembly of the present invention increase the light efficiency of the light fixture and diffuse the light relatively uniformly, which minimizes the "cave effect" commonly noted in areas using conventional parabolic light fixtures in the ceiling. In one embodiment, the light fixture or troffer of the present invention results in a luminare efficiency that is greater than 80%, preferably.

BRIEF DESCRIPTION OF THE FIGURES

These and other features of the preferred embodiments of the invention will become more apparent in the detailed description in which reference is made to the appended drawings wherein:

FIG. **1** is an exploded top perspective view of one embodiment of the light fixture of the present invention.

FIG. **2** is an exploded bottom perspective view of the light fixture of FIG. **1**.

FIG. **3** is a bottom perspective view of the light fixture of FIG. **2**.

FIG. **4** is a cross-sectional view of the light fixture of FIG. **3**, taken along line **4-4**.

FIG. **5**A is a cross-sectional view of the light fixture of FIG. **3**, taken along line **5-5**.

FIG. **5**B is a cross-sectional view of one embodiment of the light fixture, showing the central lens portion having a concave shape.

FIG. **5**C is a cross-sectional view of one embodiment of the light fixture, showing at least a portion of the central lens portion having a flat shape.

FIG. **6** is an exploded bottom perspective view of a second embodiment of the light fixture of the present invention.

FIG. **7** is a partial top perspective view of a housing of the light fixture showing one embodiment of a closure plate releaseably connected to a port defined within a ballast enclosure.

FIG. **8** is an exploded bottom perspective view of one embodiment of a lens assembly of the light fixture of the present invention showing an elongated lens and a diffuser inlay.

FIG. **9** is a cross-sectional view of the lens assembly of FIG. **8**, taken along line **9-9**.

FIG. **10** is an enlarged partial cross-sectional view of the lens assembly of FIG. **8**, showing one embodiment of an array of prismatic elements disposed on a surface of the lens.

FIG. **11** is an enlarged partial cross-sectional view of the lens assembly, showing an alternative embodiment of the array of prismatic elements.

FIGS. **12** and **13** are enlarged partial cross-sectional views of the lens assembly, showing additional alternative embodiments of the array of prismatic elements.

FIG. **14** shows an enlarged partial cross-sectional view of one embodiment of the lens assembly of the present invention with the diffuser inlay in registration with a portion of the prismatic surface of the lens.

FIG. **15** is a partial cross-sectional view of the light fixture of FIG. **3**, taken along line **15-15**, showing exemplary paths of light emitted from a high-intensity light source housed within the light fixture above the ceiling plane.

FIG. **16** shows illumination test results for an exemplary prior art 3-lamp T8 parabolic troffer.

FIG. **17** shows illumination test results for an exemplary 2-lamp T5 light fixture of the present invention.

FIG. **18** shows an exemplary path of a reverse ray of light, in a vertical plane transverse to the longitudinal axis of the light fixture, entering a face of the lens oriented away from the light source.

FIG. **19** shows an exemplary path of a reverse ray of light, in a vertical plane transverse to the longitudinal axis of the light fixture, being rejected out of a face of the lens, the face being that is oriented away from the light source.

FIG. **20** shows an exemplary path of a reverse ray of light, in a vertical plane parallel to the longitudinal axis of the light fixture, entering a face of the lens and being rejected out of the face of the lens, the face being oriented away from the light.

FIG. **21** is a perspective view of the exemplary path of a reverse ray of light.

DETAILED DESCRIPTION OF THE INVENTION

The present invention is more particularly described in the following exemplary embodiments that are intended as illustrative only since numerous modifications and variations therein will be apparent to those skilled in the art. As used herein, "a," "an," or "the" can mean one or more,

depending upon the context in which it is used. The preferred embodiments are now described with reference to the figures, in which like reference characters indicate like parts throughout the several views.

Ranges may be expressed herein as from "about" one particular value, and/or to "about" another particular value. When such a range is expressed, another embodiment includes from the one particular value and/or to the other particular value. Similarly, when values are expressed as approximations, by use of the antecedent "about," it will be understood that the particular value forms another embodiment.

Referring to FIGS. **1**-**6**, a light fixture **10** or troffer of the present invention for illuminating an area includes a reflector assembly **20** for housing a linear light source **12**. The light source extends along a light longitudinal axis between a first end **14** of the light source and a spaced second end **16** thereof. Light emanating from the light source **12** is diffused by a lens assembly **100** that is positioned between the light source **12** and the area to be illuminated. The light source **12** may be a conventional fluorescent lamp, and in one aspect, the light source **12** can be a conventional T5 lamp.

The reflector assembly **20** of the light fixture includes an elongated base member **22** that has a first end edge **24**, a spaced second end edge **26**, a first longitudinally extending side edge **28** and an opposed second longitudinally extending side edge **29**. The base member **22** further has a base surface **30** extending along a base longitudinal axis. The base member can be formed from a single piece of material or from a plurality of adjoined pieces. As one will appreciate, the reflector assembly can be formed from any code-compliant material. For example, the base member can be formed from steel.

A portion of the base surface **30** of the base member **22** forms at least one longitudinally extending hollow **32** that extends inwardly in the transverse dimension with respect to and away from the respective first and second longitudinally extending side edges. Each hollow **32** has a first hollow edge **34** and a second hollow edge **36** and extends inwardly toward a central portion **38** defined by and between the respective first and second hollow edges **34**, **36**. The central portion defines a longitudinally extending trough **40** that extends inwardly away from the surface of the hollow **32**. At least a portion of each hollow **32** preferably forms a reflective surface **33** extending between central portion **38** and a respective one of the first and second hollow edges **34**, **36**. In one embodiment, at least a portion of a section of each hollow **32** normal to the base longitudinal axis has a generally curved shape such that portions of the hollow **32** form a generally curved reflective surface **35** for diffusely reflecting light received from the lens into the architectural space in a desired pattern. In one embodiment, the transverse section of the hollow can have a conventional barrel shape. In an alternative embodiment, a portion of each hollow **32** can have at least one planar portion.

In one aspect, at least a portion of the hollow of the base surface **30** of the base member can be painted or coated with a reflective material or formed from a reflective material. The reflective material may be substantially glossy or substantially flat. In one example, the reflective material is preferably matte white to diffusely reflect incident light.

The central portion **38** of the light fixture is preferably symmetrically positioned with respect to the first and second hollow edges **34**, **36**. The light fixture **10** of the present invention can include one or more hollows **32** that each houses a light source **12**, as shown in FIG. **6**. For example, in a light fixture having a single hollow, the first and second hollow edges **34**, **36** of the hollow would extend generally to the respective longitudinally extending side edges **28**, **29** of the base member **22**. In an alternative example, in which the light fixture **10** has two hollows, the base member **22** defines a pair of adjoining, parallel hollows. Here, a first hollow edge **34** of a first hollow **32'** extends generally to the first side edge **28** of the base member, and a second hollow edge **36** of a second hollow **32"** of the pair of hollows extends generally to the second side edge **29** of the base member. The second hollow edge **36** of the first hollow **32'** and the first hollow edge **34** of the second hollow **32"** are adjoined in one example. Alternatively, the second hollow edge **36** of the first hollow **32'** and the first hollow edge **34** of the second hollow **32"** are positioned proximate or near each other.

In one aspect, at least a portion of the base surface **30** of the base member **22**, preferably at least a portion of the reflective surface **33** thereof, has a plurality of male ridges **37**, see FIGS. **5**B-**5**C, formed thereon that extend longitudinally between the ends of the base member. In an alternative aspect, at least a portion of the base surface **30** of the base member, preferably at least a portion of the reflective surface **33** thereof, has a plurality of female grooves **39** formed thereon that extend longitudinally between the ends of the base member. Alternatively, the ridges or grooves extend at an angle with respect to the longitudinal axis of the base member. For example, the male ridges or female grooves may extend transversely with respect to the base longitudinal axis (i.e., extending between the respective first and second longitudinally extending side edges **28**, **29** of the base member). In another aspect, each male ridge or female groove **37**, **39** can extend substantially parallel to an adjoining male ridge or female groove. The ridges **37** or grooves **39** formed on the hollow **32** provide a diffusely reflecting surface.

The trough **40** is formed by a top surface **42**, a first side trough surface **44** and an opposed second side trough surface **46** is provided for receiving the elongated light source **12**. The trough extends along an axis parallel to the longitudinal axis of the light fixture. Each respective first and second side trough surface has a lower edge **48** that is integral with a portion of the adjoined hollow **32**. In one example, the lower edges of the first and the second trough surfaces are integral with the reflective surfaces **33** of the adjoined hollow. Each respective first and second side trough surface defines a trough surface axis (FIG. **5**A) that extends in a vertical plane normal to the base longitudinal axis of the base member.

In one aspect, the trough surface axis of each of the first and second trough surfaces **44**, **46** respectively forms an angle θ of about and between about 140° to 90° with respect to the top surface **42** of the trough. More particularly, the angle θ can be about and between about 135° to 95° with respect to the top surface of the trough. Still more particularly, the angle θ can be about and between about 130° to 100° with respect to the top surface of the trough. In another aspect, the angle θ formed between each of the respective first and second trough surfaces and the top surface of the trough can be substantially equal.

In one aspect of the invention, the light source **12** can be positioned between the base surface of the base member and the lens assembly. In another aspect of the invention, the light source **12** can be positioned within the trough **40** of the reflector assembly **20** such that the light longitudinal axis is positioned above a plane that extends between the lower edges **48** of the respective first and second trough surfaces. Alternatively, the light source **12** can be positioned within the trough of the reflector assembly such that the light source

is positioned substantially about or above an arcuate section that extends between the lower edges **48** of the respective first and second trough surfaces **44**, **46** and is an arcuate continuation of the curvature of the curved reflective surfaces **35** of the hollow. In this aspect, the radius of the arcuate section can have substantially the same radius as the curved portion of the hollow. If the curved reflective surfaces of the hollow are parabolic, the arcuate section is a parabolic extension of the parabolas of the curved reflective surface.

The reflector assembly **20** can also include a first end face **50** and an opposed second end face **52**. Each of the end faces extends upwardly away from a respective bottom edge **54** toward a top edge **55** of the light fixture. Each end face has a face longitudinal axis that forms an obtuse angle with respect to the longitudinal axis of the base member **22**. In one aspect, the end faces **50**, **52** are positioned with respect to the base member such that a portion of the top edge **55** of the end faces **50**, **52** is positioned in substantial overlying registration with portions of the base surface **30**. It is contemplated that at least a portion of the top edge **55** can contact at least a portion of the base surface **30**. In another aspect, at least a portion of the top edge **55** is spaced inwardly from the end edges **24**, **26** of the base member. The angled first and second end faces **50**, **52** optically alter the apparent perspective of the light fixture and aesthetically give the light fixture a deeper appearance.

In one aspect, the face longitudinal axis of each of the first and second end faces **50**, **52** respectively forms an angle Ω of about and between 95° to 160° with respect to the base longitudinal axis of the base member **22**. More particularly, the face longitudinal axis of each of the first and second end faces respectively forms an angle Ω of about and between 100° to 150° with respect to the base longitudinal axis. Still more particularly, the face longitudinal axis of each of the first and second end faces respectively forms an angle Ω of about and between 100° to 135° with respect to the base longitudinal axis. In another aspect, the face longitudinal axis of each of the first and second end faces respectively forms an angle Ω of about 120° with respect to the base longitudinal axis. In yet another aspect, the respective obtuse angles formed between the face longitudinal axis of the first end face **50** and between the face longitudinal axis of the second end face **52** and the base longitudinal axis of the base member **22** are substantially equal.

Alternative shapes of the first and second end faces **50**, **52** are contemplated. Each of the first and second end faces may be substantially planar or non-planar. In the non-planar embodiments, portions of the first and second end faces are curved. The curved portions of the first and second end faces can be substantially concave or substantially convex. Portions of the first and second end faces can also have male ridges or female grooves formed thereon. The male ridges or female grooves can be sized, shaped and oriented to visually complement the male ridges or female grooves on the base member **22**, as described above.

The light fixture **10** of the present invention also includes a housing **60** having a first end wall **62** and a second end wall **64**. In one aspect, as shown in FIG. **2**, the first end wall **62** is connected to a portion of the first end edge **24** of the base member **22** and the second end wall is connected to a portion of the second end edge **26** of the base member **22**. In this aspect, as shown in FIG. **4**, a portion of the a bottom edge **54** of the first end face **50** can be connected to a bottom portion **63** of the first end wall **62** of the housing and a portion of bottom edge **54** of the second end face **52** is also connected to a bottom portion **63** of the second end wall **64** of the housing. In one example, the first end wall **62** and the first end face **50** can be formed integral to each other. Similarly, the second end wall **64** and the second end face **52** can be formed integral to each other. The first end wall **62** can be positioned substantially perpendicular to the base member **22** adjacent the first end edge of the base member. Similarly, the second end wall **64** can be positioned substantially perpendicular to the base member **22** adjacent the second end edge of the base member.

In one aspect, an opening **56** is defined in each of the first and second end faces **50**, **52**, which opening **56** is constructed and arranged to receive at least a portion of a selected end **14**, **16** of the light source **12** therein. In this aspect, portions of the respective first and second end faces **50**, **52**, portions of the respective first and second end walls **62**, **64**, and portions of the base surface **30** together define a chamber **58** adjacent the respective top edges **55** the first and second end faces. The chamber **58** is in operative communication with the opening **56** in the respective first and second faces **50**, **52** and is constructed and arranged to receive at least a portion of a selected end **14**, **16** of the light source therein. The brighter conventional lamps, such as the exemplified T5 lamp, are typically shorter and have an elongated dark portion proximate their ends when compared to other conventional elongated fluorescent lamps, such as, for example, conventional T8 and T12 lamps. Thus, in use, the chambers prevent the darkened ends of the selected light source from being visible through the lens assembly.

In one aspect, each chamber **58** is constructed and arranged to mount an electrical contact **59** or receptacle for detachably securing a selected end of the light source thereto. In one example, the electrical contact **59** is mounted onto a portion of the base surface **30** of the base member **22** that partially defines the chamber **58**. It is contemplated that the electrical contact **59** can be mounted to any of the surfaces that define the chamber **58**.

Referring to FIGS. **1** and **7**, the housing of the light fixture can also include at least one angled cover **65**, which are exemplarily illustrated as being a pair of angled faces **65'** and **65"**, respectively. In one aspect, each angled cover has a first panel **66** and a second panel **67** that are connected to each other along a common, angled edge **68**. Each first panel **66** has a first side edge **70** and each second panel **67** has a second side edge **72**. The first side edge **70** of the first panel **66** is connected to a portion of the first longitudinal side edge **28** of the base member **22**. The second side edge **72** of the second panel **67** is connected to a portion of the base top surface **31** of the base member **22**. In one example, the first panel **66** of the angled cover **65** is substantially perpendicular to the base member **22** adjacent the first longitudinally extending side edge **28** of the base member. In another example, the first and second panels **66**, **67** of the angled cover are substantially perpendicular to each other. In one aspect, the angled cover extends between the first and second end walls **62**, **64** of the housing **60** such that portions of the first angled cover, portions of the respective first and second end walls **62**, **64** and portions of the base top surface **31** together define a first ballast enclosure **74'** (FIG. **7**).

The light fixture **10** also includes at least one conventional light ballast **76** constructed and arranged for electrically connecting the light source to an external power source. In one aspect, the at least one ballast **76** is positioned within the interior of the first ballast enclosure **74'** (FIG. **7**). In order to access the ballast, a portion of the first angled cover **65'** of the housing **60** of the light fixture defines a first port **78'** that is in communication with the interior of the first ballast enclosure **74'**. In one aspect, the first port is positioned

adjacent the angled edge **68** of the first angled cover **65'**. The housing **60** may also include a first closure plate **79'** that is constructed and arranged for releasable connection to the first angled cover **65'**. In a closed position, the first closure plate is in substantial registration with the first port **78'** so that the at least one ballast positioned within the first ballast enclosure **74'** can be selectively enclosed.

Referring to FIG. **7**, in one aspect, at least a portion of the first port **78'** is defined in a portion of the second panel **67** of the first angled cover **65'**. In another aspect, at least a portion of the first port **78'** is defined in a portion of the first panel **66** of the first angled cover **65'**. In this latter example, the defined portion of the first port **78'** is spaced from the first side edge **70** of the first panel **66** of the first angled cover a predetermined distance. The predetermined distance is greater than the height of a conventional ceiling panel or tile that would typically abut the bottom portion of the light fixture. Because the predetermined distance is greater than the conventional height of a ceiling panel, the first closure plate **79'** can therefore be removed without binding onto the abutting ceiling panel or ceiling support apparatus.

In an alternative example, a portion of the first port **78'** is defined in a portion of both the first and second panels **66**, **67**. Here, the defined portion of the first port in the first panel is spaced from the first side edge **70** of the first panel **66** of the first angled cover **65'** the predetermined distance, as discussed above. In this example, portions of the first closure plate **79'** are positioned at an angle with each other that is complementary to the angle formed between the first and second panels **66**, **67** of the first angled cover along angled edge **68**.

The at least one angled cover **65**, as discussed above, can also include a second angled cover **65"** (FIG. **1**). In this example, the first side edge **70** of the first panel **66** of the second angled cover **65"** is connected to a portion of the second longitudinally extending side edge **29** of the base member **22** and the second side edge **72** of the second panel **67** of the second angled cover is connected to a portion of the base top surface **31** of the base member. Similar to the first angled cover, the second angled cover extends between the first end wall **62** and the second end wall **64** of the housing **60** such that portions of the first and second end walls **62**, **64**, portions of the second angled cover **65"**, and portions of the base top surface **31** together define a second ballast enclosure **74"**. The second ballast enclosure can remain empty or a second ballast **76"** can be positioned within the interior of the second ballast enclosure as the electrical demands of the use of the light fixture dictate. As one will appreciate, the second ballast can be in electrical communication with the light source and the external power source.

Accordingly, and still referring to FIG. **1**, a portion of the second angled cover can define a second port **78"** adjacent the angled edge **68** that is in communication with the second ballast enclosure **74"**. A second closure plate **79"** is provided that is constructed and arranged for releasable connection to the second angled panel **65"** such that, in a closed position, the second closure plate **79"** is in substantial registration with the second port. Thus, the second ballast **78"** positioned in the second ballast enclosure **74"** can be selectively enclosed.

In one aspect, therefore, at least a portion of the second port **78"** is defined in a portion of the first panel **66** of the second angled cover **65"** and is spaced from the first side edge **70** of the first panel **66** the predetermined distance, as discussed above, for clearance from abutting ceiling panels. Alternatively, at least a portion of the second port **78"** is defined in the second panel **67** of the second angled cover. In one other embodiment, at least a portion of the second port **78"** is defined in a portion of the first panel **66** of the second angled cover (spaced from the first side edge **70** of the first panel the predetermined distance) and at least a portion of the second port **78"** is defined in a portion of the second panel **67** of the second angled cover **65"**. Here, portions of the second closure plate **79"** are positioned at an angle with respect to each other that is complementary to the angle formed between the first and second panels **66**, **67** of the second angled cover **65"** along angled edge **68**.

In an alternative embodiment, suitable for retrofit applications, the housing can be a pre-existing housing that, for example, is conventionally mounted in a ceiling. In this embodiment, the reflector assembly of the present invention is connected to the pre-existing housing. In one aspect, at least a portion of the base member defines an access port. A movable cover (not illustrated) is provided in or on the reflector assembly that can be opened and closed by an operator to access a ballast that is disposed in an interior cavity formed between the back of the reflector assembly and portions of the pre-existing housing.

In an alternative embodiment, the light fixture is suspended from the ceiling. In this embodiment, the reflector assembly can be connected to a housing that defines an interior cavity sized to accept the electrical ballast therein. The housing is spaced from the ceiling a predetermined distance and is mounted to the ceiling via conventional suspension means. Alternatively, the ballast can be mounted onto a portion of the surface of the base member that is oriented toward the ceiling. Here, the base member is spaced from the ceiling a predetermined distance and is mounted to the ceiling via conventional mounting means.

As one will appreciate, it is contemplated that such a suspended light fixture could include one or more hollows, as shown in FIG. **6**. In a suspended light fixture having a single hollow, the respective first and second side edges of the hollow would extend to the edges of the base member. In an example having a pair of parallel hollows, the first hollow edge of the a first hollow extends to one side edge of the base member and the second hollow edge of the second hollow edge extends to the other side edge of the base member. In one aspect, the trough of the reflector assembly of the suspended light fixture is integral with a portion of an adjoined hollow. In another aspect, the reflector assembly of the suspended light fixture includes at least one end face that is positioned at an obtuse angle with respect to the base member of the top surface **31** of the reflector assembly.

Referring to FIGS. **1-6** and **8-15**, the lens assembly **100** of the present invention is constructed and arranged to direct light emitted by the light source **12** onto the area to be illuminated. A basic function of the lens assembly **100** is to diffuse the light from the light source **12** to effectively hide the light source **12** itself from view while reducing its brightness. Thus, to an external viewer, the lens assembly appears to be substantially uniformly illuminated and effectively becomes the source of light for the light fixture. This is accomplished in the preferred embodiment by providing the lens **110** of the lens assembly with an array **120** of longitudinally extending prismatic elements **122** with short focal lengths. Because of the short focal lengths of the prismatic elements, the light from the light source is focused to parallel images very close to the surface of the lens at large angles of convergence. Because of the large angles of convergence, the images overlap and the light is essentially diffused. The diffused light is then either directed onto the surface to be illuminated without further reflection or is

reflected by the reflective surfaces of the hollow **32**. Thus, the lens assembly provides a diffuse source of lowered brightness.

As discussed above, the light source **12** is mounted in the trough and is recessed with respect to the side edges of the reflector assembly. This allows the lens **110** to be placed higher in the light fixture and provides geometric control of high-angle rays emanating from the lens in the transverse direction. Thus, light rays produced at high viewing angles are physically blocked by the bottom longitudinally extending side edges **28**, **29** of the light fixture, which prevents glare at high angles in that transverse direction. The light fixture of the invention controls glare in the longitudinal direction, however, optically.

High angle glare is reduced in the longitudinal direction as illustrated in FIGS. **18-21** and as described below. Thus, in this aspect, the light fixture of the invention prevents glare at high viewing angles through two mechanisms, geometrically in the transverse direction and optically in the longitudinal direction.

In one aspect, the lens assembly **100** includes a lens **110** having a first end edge **112**, an opposed second end edge **113**, and a central lens portion **114** that extends between the first and second edges. The central lens portion **114** has a lens longitudinal axis that extends between the first and second end edges. In one example, the lens longitudinal axis is generally parallel to the light source longitudinal axis. In use, the lens **110** of the lens assembly is positioned with respect to the reflector assembly **20** of the light fixture such that substantially all of the light emitted by the light source **12** passes through the lens **110** prior to impacting portions of the reflective surfaces **33** of the reflector assembly and/or prior to being dispersed into the surrounding area.

The lens **110** can be made from any suitable, code-compliant material such as, for example, a polymer or plastic. For example, the lens **110** can be constructed by extruding pellets of meth-acrylate or polycarbonates into the desired shape of the lens. The lens **110** can be of a clear material or a translucent material. In another aspect, the lens can be colored or tinted.

Referring to FIGS. **5A-5C**, the central lens portion **114** of the lens has a prismatic surface **116** on a face **118** of the central lens portion that is either spaced from and facing toward the light source **12** (FIG. **5A**) or, alternatively, spaced from and facing away from the light source **12** (FIG. **5B**). In one aspect of the invention, the central lens portion **114** is curved in cross-section such that at least a portion of the face **118** of the central lens portion has a concave or convex shape relative to the light source. In an alternative embodiment, at least a portion of the central lens portion **114** is planar in cross-section.

In one aspect, the lens **110** is positioned within the reflector assembly so that it is recessed above a substantially horizontal plane extending between the first and second longitudinally extending side edges **28**, **29** thereof. In a further aspect, the lens is recessed within the reflector assembly such that a plane bisecting one of the respective first and second longitudinally extending side edges and a tangential portion of the lens is oriented at an acute angle γ to the generally horizontal plane extending between the first and second longitudinally extending side edges **28**, **29**. In one aspect, the acute angle γ is about and between 3° to 30°. More particularly, the acute angle γ is about and between 05° to 20°. Still more particularly, the acute angle γ is about and between 10° to 15°.

The recessed position of the lens assembly within the reflector assembly provides for high angle control of light emitted by the light fixture in a vertical plane normal to the base longitudinal axis of the base member. In use, an observer approaching the ceiling mounted light fixture of the present invention from the side (i.e., from a direction transverse to the base longitudinal axis) would not see the lens assembly until they passed into the lower viewing angles. In effect, portions of the reflector assembly act to block the view of the lens assembly from an observer at the higher viewing angles (i.e., the viewing angles closer to the horizontal ceiling plane).

In one aspect, as shown in FIGS. **8-17**, the prismatic surface **116** of the lens defines an array of linearly extending prismatic elements **120**. In one example, each prismatic element **122** of the array **120** can extend substantially longitudinally between the first and second edge and edges **112**, **114** of the lens. Alternatively, each prismatic element **122** of the array can extend linearly at an angle relative to the lens longitudinal axis. For example, each prismatic element thereof can extend generally transverse to the lens longitudinal axis. In a further aspect, each prismatic element **122** can have substantially the same shape or, alternatively, can vary in shape to cause differing visual effects on an external observer, lighting of the hollow surface, or light distribution to the room. In one aspect, each prismatic element has a portion that is rounded or has a curved surface.

In one aspect, in section normal to the lens longitudinal axis, each prismatic element has a base **124** and a rounded apex **126**. Each prismatic element extends toward the apex **126** substantially perpendicular with respect to a tangent plane that extends through the base **124**. In one aspect, an arcuate section or curved surface **128**, normal to the lens longitudinal axis, of each prismatic element **122** subtends an angle β of about and between 85° to 130° with reference to the center of curvature of the arcuate section. More particularly, the arcuate section **128** of each prismatic element forms an angle β of about and between 90° to 120°. Still more particularly, the arcuate section **128** forms an angle β of about and between 95° to 110°. In another aspect, the arcuate section **128** forms an angle β of about 100°.

In one aspect, the arcuate section **128** extends from a first cusp edge **130** of the prismatic element **122** to an opposed second cusp edge **132**. In this example, adjoining prismatic elements are integrally connected at a common cusp edge. Alternatively, the arcuate section **128** may be formed in a portion of the apex **126** of the prismatic element **122**, such that adjoining prismatic elements are integrally connected along the common edge **133**. In this example, portions of the prismatic element **122** extending between the arcuate section and the common edge **133** can be planar or non-planer, as desired. It should be understood that other configurations and shapes are contemplated where the cross section of the optical elements is not strictly circular, and include, for example, parabolic, linear, or other shapes.

In one aspect, the base **124** of each prismatic element **122** has a width (w) between its respective common edges of about and between 0.5 inches to 0.01 inches. More particularly, the base of each prismatic element has a width between its respective common edges of about and between 0.3 inches to 0.03 inches. Still more particularly, the base of each prismatic element has a width between its respective common edges of about and between 0.15 inches to 0.05 inches.

In another aspect, as shown in FIG. **11**, a section of the array of prismatic elements **120** has a shape of a continuous wave. The section can be normal to the lens longitudinal axis. In one aspect, the shape of the continuous wave is a periodic waveform that has an arcuate section **128** formed in

both the positive and negative amplitude portions of the periodic waveform (i.e., two prismatic elements are formed from each single periodic waveform). The period of the periodic waveform can be substantially constant or may vary along the array of prismatic elements. In one aspect, the periodic waveform is a substantially sinusoidal waveform. In this example, the common cusp "edge" **130**,**132** between the two prismatic elements **122** forming from each periodic waveform occurs at the transition from positive/negative amplitude to negative/positive amplitude.

As shown in FIG. **11**, therefore, the arcuate section **128** of each prismatic element **122** within each of the positive and negative amplitude portions of the periodic waveform subtends an angle λ of about and between 85° to 130° with reference to a center of curvature of the arcuate section. More particularly, the arcuate section **128** of each prismatic element within each of the positive and negative amplitude portions of the periodic waveform forms an angle λ of about and between 90° to 120°. Still more particularly, the arcuate section **128** of each prismatic element within each of the positive and negative amplitude portions of the periodic waveform forms an angle λ of about and between 95° to 110° with respect to the base longitudinal axis. In another aspect, the arcuate sections **128** within each of the positive and negative amplitude portions of the periodic waveform form an angle λ of about 100°.

Still referring to FIG. **11**, in one aspect, the period P of each prismatic element is about and between 1.0 inches to 0.02 inches. More particularly, the period P of each prismatic element is about and between 0.6 inches to 0.06 inches. Still more particularly, the period P of each prismatic element is about and between 0.30 inches to 0.10 inches.

The lens **110** of the light assembly **100** is constructed and arranged for detachable connection to the light fixture **10** or troffer. In one aspect, when positioned relative to the base member **22**, the central lens portion **114** of the lens assembly can extend generally parallel to the light source longitudinal axis and generally symmetric about a plane that extends through the light source longitudinal axis. In one other aspect, the plane of symmetry extends through the area desired to be illuminated. In one example, the lens **110** is constructed and arranged for detachable connection to a portion of the base surface **30** of the reflector assembly **20**. In one particular example, the lens **110** is constructed and arranged for detachable connection to a portion of the trough **20** defined in the base member **22**.

In one aspect, the elongated lens **110** has a first arm **140** (FIG. **9**) that is connected to a first lens edge **115** of the central lens portion **114** and a second arm **142** that is connected to a second lens edge **117** of the central lens portion **114**. A portion of the each respective first and second arm **140**, **142** is configured for being detachably secured to portions of the trough **40**. In one example, a portion of the first arm **140** is constructed and arranged for being detachably secured to a portion of the first side trough surface **44** (FIG. **5**A) and a portion of the second arm **142** is configured for being detachably secured to a portion of the second side trough surface **46**.

In one example, each of the first and second side trough surfaces **44**, **46** has at least one male protrusion **45** (FIG. **6**), for example, a tab extending inwardly into the interior of the trough **40**. Each of the first and second arms **140**, **142** of the lens **110** has an end portion **144** that is sized and shaped for detachable engagement with the at least one male protrusion **45** in each of the respective first and second trough surfaces. Alternatively, each of the first and second side surfaces **44**, **46** can define at least one slot **47** (FIG. **2**) that is constructed and arranged to complementarily engage a male protrusion **145** projecting from the end portion **144** of each of the respective first and second arms **140**, **142** of the lens. In use, the lens **110** may be removed from the reflector housing by applying force to the respective first and second lens edges **115**, **117** of the central lens portion **114**. The application of force causes the central lens portion **114** to bend and, resultantly, causes the respective end portions **144** of the first and second arms **140**, **142** to move toward each other. Removal of the applied force allows the lens **110** to return toward its unstressed shape and allows the respective end portions **144** of the first and second arms **140**, **142** to move away from each other.

In one aspect, each of the first and second arms of the lens has a bottom portion **146** (FIG. **9**) that is connected to the respective first and second lens edges **115**, **117** and extends toward the end portions **144** of the respective arms **140**, **142**. The bottom portion **146** can be planar or non-planer in shape. In one example, the bottom portion **146** extends substantially between the first end edge **112** and the second end edge **113** of the lens.

As shown in FIG. **5**A, in one example, where the lens **110** is detachably secured to the trough **40** of the reflector assembly **20**, a portion of the bottom portion **146** of each of the first and second arms of the lens is detachably positioned adjacent to a portion of the respective lower edges **48** of the first and second side trough surfaces **44**, **46**. In one aspect of the invention, a portion of the bottom portion **146** of each of the first and second arms **140**, **142** of the lens **110** is positioned at an acute angle with respect to the reflective surface **33** of the hollow **32** adjacent the respective lower edge **48** of the first and second trough surfaces **44**, **46**. In this example, the portion of the bottom portion **146** of each of the first and second arms of the lens overlies a portion of the reflective surface **33** of the hollow **32** adjacent the respective lower edge **48** of the first and second trough surfaces. Here, the distance between the respective first and second lens edges **115**, **117** of the lens **110** is greater than the distance between the respective lower edges **48** of the first and second side trough surfaces **44**, **46**.

In the embodiment described immediately above, each of the respective first and second lens edges **115**, **117** is spaced from and overlies a portion of the reflective surfaces **33** of the hollow **32**. Alternatively, and as shown in FIGS. **5**B and **5**C, the respective first and second lens edges **115**, **117** may be positioned adjacent a portion of the respective lower edges **48** of the first and second side trough surfaces **44**, **46**. In this particular embodiment, the lens **110** generally does not overly a portion of the curved reflective surface **33** of the hollow.

In one aspect, portions of the lens **110** that are positioned adjacent the surface of the reflective assembly **20** are sized and shaped to be in close overlying registration with portions of the reflector assembly when the lens **110** is detachably secured to the reflector assembly **20**. For example, each of the respective first and second ends **112**,**113** of the lens are sized and shaped to be positioned adjacent to and in close overlying registration with portions of the reflector assembly **20**, such as, for example, portions of the first and second end faces, if used. Thus, the light source **12** housed within the trough **40** of the reflector assembly **20** is substantially enclosed when the lens **110** is detachably secured to the reflective assembly.

In one aspect, when the lens assembly is positioned within the reflector assembly, the light source is positioned below a plane bisecting the respective first or second longitudinally extending side edges **28**, **29** of the base member **22** and the

adjacent respective first or second lens edges **115**, **117**. In this example, the relative position and shape of the reflector assembly and the lens assembly would prevent an observer, approaching the light fixture from a direction transverse to the base longitudinal axis, from viewing the light source through the bottom portion of the respective first or second arms of the lens.

The lens assembly **100** can also include a conventional diffuser inlay **150** (FIG. **9**), such as, for example, a Opti-Grafix™ film product, which is a diffuser film that can be purchased from Grafix® Plastics. The diffuser inlay **150** can be pliable or fixed in shape, transparent, semi-translucent, translucent, and/or colored or tinted. In one example, the diffuser inlay **150** has relatively high transmission efficiency while also scattering a relatively high amount of incident light to angles that are nearly parallel to its surface. In one aspect, the diffuser inlay is positioned between a portion of the face **118** of the central lens portion and the light source **12**. In another aspect, the diffuser inlay is sized and shaped for positioning in substantial overlying registration with the portion of the face **118** of the central lens portion **114** that is oriented toward the light source **12**.

The diffuser inlay **150** may be positioned in substantial overlying registration with a portion of the prismatic surface **116** of the central lens portion **114**. In one aspect of the present invention, there is a gap **152** formed between portions of the two adjoining rounded prismatic elements **122** extending between the respective apexes of the two adjoined prismatic elements and the bottom face **151** of the diffuser inlay **150**. The formed gap enhances the total internal refection capabilities of the lens assembly **100**.

Referring to FIGS. **16-21**, the lens assembly **100** and reflector assembly **20** of the present invention increase the light efficiency of the light fixture **10** and diffuse the light relatively uniformly so that the "cave effect" commonly noted in areas using conventional parabolic light fixtures in the ceiling are minimized. In one embodiment, the light fixture **15** or troffer of the present invention results in a luminare efficiency that is greater than about 80%, preferably greater than about 85%. The efficiency of the light fixture **10** measured by using a goniophotometer to compare the light energy from the light fixture at a given angle with the light from an unshielded light source, as specified in the application testing standard. The test results for an exemplary light fixture of the present invention and comparable results for a conventional parabolic light fixture are included in FIGS. **16** and **17**. The light fixture of the present invention has reduced light control relative to conventional parabolic fixtures to provide a lit space (particularly the walls) with a bright appearance while still maintaining adequate control and comfortable viewing for today's office environment.

The light fixture **10** of the present invention has a low height profile that allows for easy integration with other building systems and installations in low plenum spaces. In one aspect, the height profile of the light fixture is about or below 5 inches. More particularly, the height profile of the light fixture is about or below 4 inches. In another aspect, the height profile of the light fixture is about 3.25 inches.

In one embodiment of the lens assembly **100** discussed above, the central lens portion **114** of the lens **110** has a concave face **118** oriented toward the light source **12** when the lens **110** is detachably secured to and within a portion of the reflector assembly **20**. The array of male rounded prismatic elements **120** can be extruded along the length of the lens **110**. In use, the lens of the present invention design has a striped visual characteristic to an external observer when back lit. These "stripes" provide for visual interest in the lens **110** and may be sized and shaped to mirror any ridges or grooves disposed therein portions of the reflective surfaces **33** of the hollow **32** of the reflector assembly **20**. The "stripes" also help to mitigate the appearance of the image of the lamp (the light source) by providing strong linear boundaries that breakup and distract from the edges of the lamp against the less luminous trough **40** of the reflector assembly **20**. In addition, the "stripes" allow for the light fixture **10** of the present invention to provide high angle light control in vertical planes that are substantially parallel to the longitudinal axis of the light fixture.

In a preferred embodiment, a primary function of the lens is to optically reduce the brightness of the light source. In addition, the lens reduces the brightness of the light source even further at higher viewing angles in the longitudinal direction by the optical phenomenon of total internal reflection. This allows the efficient use of light sources of higher brightness while nevertheless reducing glare at high viewing angles.

It will be appreciated that the light fixture of the invention utilizes a unique combination of features to reduce high-angle glare in the transverse and longitudinal directions. In the transverse direction, high angle glare is controlled primarily by the geometric relationship between the lamp and the reflector assembly of the light fixture, as discussed above, while in the longitudinal direction, high angle glare is controlled primarily by the lens optically. In the preferred embodiment, the lens itself essentially becomes the light source, which effectively reduces lamp brightness in both the transverse and longitudinal directions optically, to further reduce glare associated with lamps of high brightness.

Referring now to FIGS. **18-21**, the optical creation of the dark "stripes" in the lens is illustrated. A "reverse ray," "backward ray" or "vision ray" is a light ray that originates from a hypothetical external viewer's eye and is then traced through the optical system of the light fixture. Although there is no physical equivalent, it is a useful construct in predicting how a particular optical element will look to an observer. In the present invention, on at least one side at the respective common cusp edges **130**, **132**, **133** of adjoining rounded prismatic elements **122**, there exists a sufficiently large angle of incidence ω relative to the normal extending from the point of incidence of the reverse ray at the lens to air interface that a reverse ray will undergo total internal reflection. In one aspect, the angle of incidence ω is at least about 40°. More particularly, the angle of incidence ω is at least about 45. Still more particularly, the angle of incidence ω is at least about 50°. In effect, the array of prismatic elements acts as an array of partial light pipes.

Each rounded prismatic element **122** has a sufficiently large angular extent such that some total internal reflection at each common cusp edge is assured regardless of viewing angle. In one aspect, since each curved surface, or arcuate section, 128 of each rounded prismatic element **122** is substantially circular, if a reverse ray undergoes total internal reflection at one portion of the arcuate section and is subsequently reflected to another portion of the arcuate section, then total internal reflection will also occur at the second point of incidence because the arcuate section's geometry causes both interactions to have substantially the same angle of incidence. Generally then, a reverse ray that undergoes total internal reflection proximate a common cusp edge **133** will eventually exit the lens **110** out the same outer surface through which it entered the lens and will terminate on a surface or object in the room (as opposed to passing through the lens and terminating on the light source or the trough of the reflector assembly behind the lens). The

reverse ray is said to be "rejected" by the lens. This means that the brightness an external viewer will perceive at the common cusp edge **133** of adjoining rounded prismatic elements **122** is the brightness associated with a room surface because any real/forward light ray impinging on the viewer's eyes from this part of the lens must have originated from the room or space. Generally, the brightness of an object or surface in the room is much lower than that of the light source or trough that is viewed through the central portions of the arcuate sections **128** of each prismatic element **122**. This high contrast in brightness between the common cusp edge **133** between adjoining rounded prismatic elements **122** and the central portion of the arcuate sections **128** of each prismatic element **122** is so high that it is perceived, to the external viewer, as dark stripes on a luminous background.

The linear array **120** of prismatic elements **122** of the lens **100** assembly optically acts in the longitudinal direction to reduce high angle glare. This may be explained by considering a reverse ray that is incident on a portion of the prismatic surface of the lens proximate the common cusp edge **133** at the critical angle (the minimum angle of incidence ω) for total internal reflection of the reverse ray. An observer viewing that portion of the lens (i.e., the portion of the area about the common cusp edge) would perceive it as being "dark" relative to that adjacent "bright" portion of the arcuate section proximate the rounded apex of each individual prismatic element. The array of linear elements thus optically controls the light emitted from the lamp in the longitudinal direction.

In one example, as the lens **110** is viewed at higher and higher viewing angles (as when the observer is further from the light fixture) in a vertical plane parallel or near parallel to the base longitudinal axis of the base member, the striping effect visible on the surface of the lens becomes more pronounced. This is a result of the increase in that portion of the prismatic surface of the lens that undergoes total internal reflection and creates the dark strips. This results from viewing the lens at angles greater than the critical angle for total internal reflection of a "reverse ray." Thus, the effective width of each stripe grows as the lens is viewed at higher viewing angles, which is observed as the lens becoming dimmer at higher viewing angles.

In the vertical planes extending between the base longitudinal axis of the reflector assembly base member and an axis transverse to the base member longitudinal axis, higher view angle control is achieved through a combination of the high angle control proffered by the linearly extending array of prismatic elements of the lens, as discussed immediately above, and the lens assembly being recessed within the reflector assembly. In the vertical plane substantially parallel to the base longitudinal axis of the reflector assembly, the optical elements of the lens assembly, i.e., the array of prismatic elements, exert primary glare control of the higher viewing angles. In the vertical plane substantially transverse to the base longitudinal axis of the reflector assembly, the recessed position of the lens assembly within the reflector assembly exerts primary glare control of the higher viewing angles.

In one aspect, if the prismatic elements **122** are regularly spaced apart, the striping effect would also be regularly spaced. In another aspect, the prismatic elements **122** of the present invention can be sized and shaped to ensure some total internal reflection at all viewing angles so that the "striping" is perceptible at all viewing angles.

In use, normal movement of a viewer in the room does not change the viewer's vertical angle of view relative to the light fixture very rapidly and at far distances the stripes become less distinct. Therefore, the change is stripe width is not perceived as a dynamic motion but rather as a subtle changing of the overall lens brightness (i.e., brighter at low vertical angles and dimmer when viewed at high vertical angles).

The rounded or curved surface portions of each prismatic element **122** provide a wide spreading or diffusion of any incident light. The high degree of diffusion helps to obscure the image of the light source **12** as seen through the lens **110** even when the light source is in relatively close proximity to the face of the lens **110** that is oriented toward the light source. This becomes increasingly apparent as the lens is viewed at higher vertical angles in the vertical plane substantially parallel to the light source.

In another aspect, the rounded or curved surface portions of the prismatic elements **122** provide for a gradual change in the perceived brightness as a result of a change in the angle of view. In yet another aspect, in an embodiment of the invention in which each prismatic element **122** has substantially the same shape, the dark striping and the brighter areas of the lens **110** appear to change uniformly and smoothly from one prismatic element **122** to the next, adjoining prismatic element **122**.

Although several embodiments of the invention have been disclosed in the foregoing specification, it is understood by those skilled in the art that many modifications and other embodiments of the invention will come to mind to which the invention pertains, having the benefit of the teaching presented in the foregoing description and associated drawings. It is thus understood that the invention is not limited to the specific embodiments disclosed hereinabove, and that many modifications and other embodiments are intended to be included within the scope of the appended claims. Moreover, although specific terms are employed herein, as well as in the claims which follow, they are used only in a generic and descriptive sense, and not for the purposes of limiting the described invention, nor the claims which follow.

What is claimed is:

1. A light fixture, comprising:

a reflector assembly extending along a base longitudinal axis, wherein the reflector assembly comprises:

a first end face and an opposed second end face, each end face forming an obtuse angle with respect to the base longitudinal axis of the reflector assembly; and

an elongated base member having a first end edge, a spaced second end edge, and a base surface, the base longitudinal axis extending between the first and second end edges, wherein the base member has a first longitudinally extending side edge and an opposed second longitudinally extending side edge, a portion of the base surface of the base member defining at least one longitudinally extending hollow, each hollow having a longitudinally extending first hollow edge and a longitudinally extending second hollow edge, wherein at least a portion of a section of the hollow is normal to the base longitudinal axis and has a generally curved shape, wherein each hollow extends inwardly toward a central portion defined between the respective first and second hollow edges, and wherein the central portion of the hollow defines a longitudinally extending trough;

a linear light source mounted within the trough of the base member; and

a lens assembly comprising an elongate lens having a first end edge, an opposed second end edge, and a central lens portion that extends between the first and second

end edges, the central lens portion defining a concave face positioned with respect to the light source, wherein the lens is constructed and arranged being for detachably secured to a portion of the trough of the base member.

2. The light fixture of claim **1**, wherein the linear light source has at least one end, and wherein the at least one end face of the reflector assembly defines an opening constructed and arranged for receiving at least a portion of the at least one end of the linear light source.

3. The light fixture of claim **1**, wherein each of the respective first and second end faces has a top edge, the opposed first and second end faces each being positioned with respect to the base member such that a portion of the top edge of the respective end face is positioned in substantially overlying registration with a portion of the base surface.

4. The light fixture of claim **1**, wherein each of the respective first and second end faces has a face longitudinal axis that forms the obtuse angle with respect to the longitudinal axis of the base member.

5. The light fixture of claim **3**, wherein at least a portion of the top edge of the respective end faces is spaced from at least a portion of the respective first and second end edges of the base member.

6. The light fixture of claim **4**, wherein the respective obtuse angles formed between the face longitudinal axis of the first end face and the base longitudinal axis and between the face longitudinal axis of the second end face and the base longitudinal axis are substantially equal.

7. The light fixture of claim **1**, wherein each of the first and second end faces is substantially planar.

8. The light fixture of claim **1**, wherein portions of each of the first and second end faces are non-planar.

9. The light fixture of claim **8**, wherein portions of each of the first and second end faces are curved.

10. The light fixture of claim **9**, wherein portions of the first and second end faces are substantially concave.

11. The light fixture of claim **9**, wherein portions of the first and second end faces are substantially convex.

12. The light fixture of claim **1**, wherein the obtuse angle is in the range of from about 95° to about 160°.

13. The light fixture of claim **1**, wherein the obtuse angle is in the range of from about 100° to about 150°.

14. The light fixture of claim **1**, wherein the obtuse angle is in the range of from about 100° to about 135°.

15. The light fixture of claim **1**, wherein the obtuse angle is about 120°.

16. The light fixture of claim **1**, wherein the linear light source comprises a first end operatively connected to the base member adjacent the first end face and a second end operatively connected to the base member adjacent the second end face, and wherein the first and second end faces, respectively, each defines an opening therein configured to receive at least a portion of a selected end of the light source therethrough.

17. The light fixture of claim **16**, further comprising a housing having a first end wall and an opposed second end wall, wherein the first end wall is connected to a portion of the first end edge of the base member and the second end wall is connected to a portion of the second end edge of the base member.

18. The light fixture of claim **17**, wherein a portion of a bottom edge of the first end face is connected to a bottom portion of the first end wall of the housing and a portion of a bottom edge of the second end face is connected to a bottom portion of the second end wall.

19. The light fixture of claim **17**, wherein the first end wall is substantially perpendicular to the base member adjacent the first end edge and the second end wall is substantially perpendicular to the base member adjacent the second end edge.

20. The light fixture of claim **17**, wherein portions of the respective first and second end faces, the respective first and second end walls, and the base member each define a chamber adjacent the respective top edges of the first and second faces that is in operative communication with the opening in the respective first and second faces.

21. The light fixture of claim **20**, wherein each of the respective chambers is constructed and arranged to receive at least a portion of a selected end of the linear light source therein.

22. The light fixture of claim **21**, wherein each chamber is constructed and arranged to mount an electrical contact for detachably securing a selected end of the linear light source thereto.

23. The light fixture of claim **22**, wherein the electrical contact is mounted onto a portion of the base surface of the base member.

24. The light fixture of claim **1**, wherein the base member comprises a single piece of material.

25. The light fixture of claim **1**, wherein the central portion is generally symmetrically positioned with respect to the first and second hollow edges.

26. The light fixture of claim **1**, wherein the lens assembly further comprises a diffuser inlay positioned between the linear light source and the concave face of the central lens portion.

27. The light fixture of claim **26**, wherein the diffuser inlay is positioned in substantial overlying registration with the concave face of the central lens portion.

28. The light fixture of claim **1**, wherein the lens is positioned with respect to the trough such that substantially all of the light emitted by the linear light source passes through the lens.

29. The light fixture of claim **1**, wherein the linear light source comprises a T5 lamp.

30. The light fixture of claim **1**, wherein at least a portion of the reflector assembly is coated with a substantially flat reflective material.

31. A light fixture, comprising:

a reflector assembly extending along a longitudinal axis, the reflector assembly comprising an elongated base member having a first end edge, a spaced second end edge, a first longitudinally extending side edge, an opposed second longitudinally extending side edge, and a base surface, the longitudinal axis of the reflector assembly extending between the first end edge and the second end edge, wherein a portion of the base surface of the base member defines at least one longitudinally extending hollow, each hollow having a longitudinally extending first hollow edge and a longitudinally extending second hollow edge, at least a portion of a section of the hollow normal to the base longitudinal axis having a generally curved, concave shape, wherein each hollow extends inwardly toward a central portion between the respective first and second hollow edges, the central portion of the hollow defining a longitudinally extending trough, which extends inwardly of the hollow, wherein the trough has a top surface that adjoins each of a first side trough surface and an opposed second side trough surface, wherein each respective first and second side trough surface has a lower edge that is integral with a portion of the adjoined

hollow, and wherein each of the first side trough surface and the second side trough surface has a trough surface axis that extends in a plane normal to the base longitudinal axis;

a linear light source operatively mounted within a portion of the trough of the reflector assembly; and

a lens assembly comprising an elongated lens mounted to a portion of the reflector assembly,

wherein the reflector assembly controls high angle glare in a transverse direction by blocking high angle rays from the lens, and wherein the lens controls high angle glare in the longitudinal direction optically.

32. The light fixture of claim **31**, wherein the portions of the hollow extending between the central portion and the respective first and second hollow edges forms a curved reflective surface.

33. The light fixture of claim **31**, wherein the elongated lens has a lens longitudinal axis that is generally parallel to the linear light source and a central lens portion that is curved in a plane that is transverse to the lens longitudinal axis, the lens being constructed and arranged for detachable connection to a portion of the trough of the base member, the central lens portion of the lens having a prismatic surface that defines a face oriented toward and spaced from the light source.

34. The light fixture of claim **33**, wherein the lens of said lens assembly is positioned with respect to the trough of the reflector assembly such that substantially all of the light emitted by the light source passes through the lens.

35. The light fixture of claim **33**, wherein at least a portion of the face of the central lens portion is concave.

36. The light fixture of claim **33**, wherein at least a portion of the face of the central lens portion is convex.

37. The light fixture of claim **33**, wherein the lens is positioned in overlying registration with the trough, and wherein the central lens portion of the lens is symmetric about a plane that extends through the linear light source.

38. The light fixture of claim **33**, wherein the central portion of the lens is generally symmetrically positioned with respect to the first and second hollow edges.

39. The light fixture of claim **31**, wherein the respective first and second hollow edges extend to the respective first and second longitudinally extending side edges of the base member.

40. The light fixture of claim **31**, wherein the base member defines a pair of adjoining, parallel hollows, a first hollow edge of a first hollow of the pair of hollows extending to the first side edge of the base member, a second hollow edge of a second hollow of the pair of hollows extending to the second side edge of the base member, and the second hollow edge of the first hollow and the first hollow edge of the second hollow being positioned proximate each other.

41. The light fixture of claim **31**, wherein the trough surface axis of each of the first and second trough surfaces respectively forms an angle in the range of from about 90° to about 140° with respect to the top surface of the trough.

42. The light fixture of claim **31**, wherein the trough surface axis of each of the first and second trough surfaces respectively forms an angle in the range of from about 95° to about 135° with respect to the top surface of the trough.

43. The light fixture of claim **31**, wherein the trough surface axis of each of the first and second trough surfaces respectively forms an angle in the range of from about 100° to about 130° with respect to the top surface of the trough.

44. The light fixture of claim **31**, wherein the light source is positioned in the trough such that a longitudinal axis of the light source is positioned above a plane extending between the lower edges of the respective first and second side trough surfaces.

45. The light fixture of claim **31**, wherein the light source is positioned therein the trough such that a longitudinal axis of the light source is positioned substantially about or above an arcuate section extending between the lower edges of the respective first and second side trough surfaces, wherein the arcuate section has substantially the same radius as the concave hollow.

46. The light fixture of claim **31**, wherein at least a portion of the base surface of the base member has a series of spaced male ridges formed thereon extending longitudinally between the first and the second end edges of the base member.

47. The light fixture of claim **31**, wherein at least a portion of the base surface of the base member has a series of spaced female grooves formed therein extending longitudinally between the first and the second end edges of the base member.

48. The light fixture of claim **31**, wherein the light source is positioned substantially parallel to the longitudinal axis of the reflector assembly.

49. The light fixture of claim **31**, wherein the elongated lens has a first arm that is connected to a first lens edge of a central lens portion and a second arm that is connected to a second lens edge of the central lens portion, a portion of the first arm constructed and arranged for being detachably secured to a portion of the first side trough surface and a portion of the second arm constructed and arranged for being detachable secured to a portion of the second side trough surface.

50. The light fixture of claim **49**, wherein each of the respective first and second arms has a bottom portion connected to the respective first and second lens edges, the bottom portion extending substantially from a first end edge of the lens to an opposed second end edge of the lens.

51. The light fixture of claim **50**, wherein a portion of the bottom portion of each of the respective first and second arms of the lens is detachably positioned adjacent a portion of the respective lower edges of the first and second side trough surfaces.

52. The light fixture of claim **51**, wherein a portion of the bottom portion of each of the respective first and second arm of the lens is positioned at an acute angle with and overlies a portion of the curved reflective surface of the hollow adjacent to the respective lower edges of the first and second side trough surfaces.

53. The light fixture of claim **52**, wherein the distance between the respective first and second lens edges of the lens is greater than the distance between the respective lower edges of the first and second side trough surfaces.

54. The light fixture of claim **53**, wherein each of the respective first and second lens edges is spaced from and overlies a portion of the curved reflective surface of the hollow.

55. The light fixture of claim **31**, wherein the respective first and second lens edges are positioned adjacent a portion of the respective lower edges of the respective first and second side trough surfaces.

56. The light fixture of claim **49**, wherein each of the respective first and second side trough surfaces have at least one male protrusion extending inwardly into the trough, and wherein each of the first and second arms of the lens has an end portion having a hook shape that is configured for detachable engagement with the at least one male protrusion of the respective first and second trough surfaces.

57. The light fixture of claim 49, wherein each of the respective first and second side trough surfaces defines at least one slot, and wherein each of the first and second arms of the lens has an end portion having a male protrusion that is constructed and arranged for detachable engagement with the at least one slot in a selected one of the respective first and second trough surfaces.

58. The light fixture of claim 31, wherein the lens assembly further comprises a diffuser inlay positioned between the central lens portion and the light source.

59. The light fixture of claim 58, wherein the diffuser inlay is positioned in substantial overlying registration with the prismatic surface of the central lens portion.

60. The light fixture of claim 31, wherein the reflector assembly further includes a first end face and an opposed second end face, each of the respective first and second end faces having a top edge, the opposed first and second end faces each being positioned with respect to the base member such that a portion of the top edge of each respective end face is positioned in substantially overlying registration with a portion of the base surface, and wherein each of the respective first and second end faces has a face longitudinal axis that forms an obtuse angle with respect to the base longitudinal axis of the base member.

61. The light fixture of claim 60, wherein at least a portion of the top edge of the respective end faces is spaced from at least a portion of the respective proximal and distal edges of the base member.

62. The light fixture of claim 60, wherein the respective obtuse angles formed between the face longitudinal axis of the first end face and the base longitudinal axis and between the face longitudinal axis of the second end face and the base longitudinal axis are substantially equal.

63. The light fixture of claim 60, wherein each of the respective first and second end faces is substantially planar.

64. The light fixture of claim 60, wherein the respective first and second faces each define an opening therein configured to receive at least a portion of an end of the light source therein.

65. The light fixture of claim 60, wherein the first end edge of the elongated lens is in overlying registration with a portion of the first end face and wherein the second end edge of the elongated lens is in overlying registration with a portion of the second side surface.

66. The light fixture of claim 32, wherein at least a portion of the reflective surface of the hollow has a plurality of male ridges formed thereon that extend longitudinally between the proximal and distal ends of the base member.

67. The light fixture of claim 32, wherein at least a portion of the reflective surface of the hollow has a plurality of female grooves formed therein that extend longitudinally between the respective first and second end edges of the base member.

68. The light fixture of claim 31, wherein the linear light source comprises a T5 lamp.

69. The light fixture of claim 31, wherein the lens assembly is positioned within the reflector assembly such that the lens assembly is recessed above a substantially horizontal plane extending between the first and the second longitudinal side edges of the base member and such that the lens assembly is not visible at high viewing angles in a vertical plane normal to the longitudinal axis of the reflector assembly.

70. The light fixture of claim 69, wherein the lens assembly is recessed within the reflector assembly such that a plane bisecting one of the respective first and second longitudinal side edges and a tangential portion of the lens is oriented at an acute angle with respect to the substantially horizontal plane extending between the first and the second longitudinal side edges of the base member.

71. The light fixture of claim 70, wherein the acute angle is in the range of from 3° to about 30°.

72. The light fixture of claim 70, wherein the acute angle is in the range of from 5° to about 20°.

73. The light fixture of claim 70, wherein the acute angle is in the range of from 10° to about 15°.

74. The light fixture of claim 49, wherein the lens assembly is positioned within the reflector assembly such that the light source is positioned below a plane bisecting one of the respective first or second longitudinally extending side edges and the adjacent respective first or second lens edges of the lens.

75. A light fixture, comprising:

a reflector assembly defining a longitudinally extending trough, wherein the reflector assembly further comprises an elongate base member having a base surface with a first end edge, a spaced second end edge, a first longitudinally extending side edge, an opposed second longitudinally extending side edge connected to the base surface along their common edges, and a base longitudinal axis extending between the first and second end edges of the base member, a portion of the base surface of the base member defining at least one longitudinally extending hollow, each hollow having a longitudinally extending first hollow edge and a longitudinally extending second hollow edge, at least a portion of a section of the hollow normal to the base longitudinal axis having a generally curved, concave shape, each hollow extending inwardly toward a central portion defined by and between the respective first and second hollow edges, wherein the central portion of the hollow defines the longitudinally extending trough extending inwardly and upwardly away from the surface of the hollow, wherein the portions of the hollow extending between the central portion and the respective first and second hollow edges form a generally curved reflective surface, and wherein the central portion is generally symmetrically positioned with respect to the first and second hollow edges;

a linear light source releasably supported in the trough of the reflector assembly; and

a lens assembly comprising an elongate lens having a central lens portion that is curved in a plane transverse to the trough and a lens longitudinal axis that is generally parallel to a light source longitudinal axis, the lens being constructed and arranged for detachable connection to a portion of the trough, the central lens portion having a prismatic surface that defines a face oriented toward and spaced from the light source,

wherein the lens of said lens assembly is positioned with respect to the trough of the reflector assembly such that substantially all of the light emitted by the light source passes through the lens, and wherein the reflector assembly controls high angle glare in the transverse direction by blocking high angle rays from the lens and the lens assembly controls high angle glare in the longitudinal direction optically.

76. The light fixture of claim 75, wherein at least a portion of the face of the central lens portion is concave.

77. The light fixture of claim 75, wherein at least a portion of the face of the central lens portion is convex.

78. The light fixture of claim 75, wherein the lens is positioned in overlying registration with the trough, and

wherein the central lens portion of the lens is symmetric about a plane that extends through the light source longitudinal axis.

79. The light fixture of claim **75**, wherein the respective first and second hollow edges extend to the respective first and second longitudinally extending side edges of the base member.

80. The light fixture of claim **75**, wherein the base member defines a pair of adjoining, parallel hollows, a first hollow edge of a first hollow of the pair of hollows extending to the first side edge of the base member, a second hollow edge of a second hollow of the pair of hollows extending to the second side edge of the base member, and the second hollow edge of the first hollow and the first hollow edge of the second hollow being adjoined.

81. The light fixture of claim **75**, wherein the trough has a top surface that adjoins each of a first side trough surface and an opposed second side trough surface, wherein each of the respective first and second side trough surfaces has an lower edge that is integral with a portion of the adjoined hollow, and wherein each of the first side trough surface and the second side trough surface has a trough surface axis that extends in a plane normal to the base longitudinal axis.

82. The light fixture of claim **81**, wherein the trough surface axis of each of the first and second trough surfaces respectively forms an angle in a range of from about 90° to about 140° with respect to the top surface of the trough.

83. The light fixture of claim **81**, wherein the trough surface axis of each of the first and second trough surfaces respectively forms an angle in a range of from about 95° to about 135° with respect to the top surface of the trough.

84. The light fixture of claim **81**, wherein the trough surface axis of each of the first and second trough surfaces respectively forms an angle in a range of from about 100° to about 130° with respect to the top surface of the trough.

85. The light fixture of claim **81**, wherein the light source is positioned the trough such that the light source longitudinal axis is positioned above a plane extending between the lower edges of the respective first and second side trough surfaces.

86. The light fixture of claim **81**, wherein the light source is positioned the trough such that the light source longitudinal axis is positioned substantially about or above an arcuate section extending between the lower edges of the respective first and second side trough surfaces, wherein the arcuate section has substantially the same radius as the concave hollow.

87. The light fixture of claim **75**, wherein the light source is positioned so that the light source longitudinal axis is substantially parallel to the base longitudinal axis of the base member.

88. A light fixture, comprising:

a reflector assembly comprising an elongated base member having a first end edge, and a spaced second end edge, a first longitudinally extending side edge, an opposed second longitudinally extending side edge connected to toe base member along their respective common edges, a base surface, and a base longitudinal axis extending between the first end edge and the second end edge of the base member, a portion of the base surface of the base member defining at least one longitudinally extending hollow, each hollow having a longitudinally extending first hollow edge and a longitudinally extending second hollow edge, at least a portion of a section of the at least one hollow being normal to the base longitudinal axis and having a generally curved shape, said at least one hollow extending inwardly toward a central portion of the hollow defined by and between the respective first and second hollow edges, the central portion of the hollow defining a longitudinally extending trough that extends inwardly away from the surface of the hollow, the portions of the hollow extending between the central portion and the respective first and second hollow edges forming a generally curved reflective surface;

a linear light source housed substantially within the trough of the reflector assembly and having a light source longitudinal axis; and

a lens assembly comprising an elongated lens that has a lens longitudinal axis that is generally parallel to the light longitudinal axis and a central lens portion that is curved in a plane that is transverse to the lens longitudinal axis, the lens being constructed and arranged for detachable connection to a portion of the trough of the reflector assembly, the central lens portion having a prismatic surface that defines a face oriented toward and spaced from the light source,

wherein the lens of said lens assembly is positioned with respect to the trough of the reflector assembly such that substantially all of the light emitted by the light source passes through the lens, and wherein the reflector assembly controls high angle glare in the transverse direction with respect to the base longitudinal axis by blocking high angle rays from the lens and the lens assembly controls high angle glare in a longitudinal direction that extends along the base longitudinal axis optically.

89. A light fixture, comprising:

a reflector assembly extending along a longitudinal axis, the reflector assembly comprising an elongated base member having a first end edge, a spaced second end edge, a first longitudinally extending side edge, an opposed second longitudinally extending side edge, and a base surface, the longitudinal axis of the reflector assembly extending between the first end edge and the second end edge, wherein a portion of the base surface of the base member defines at least one longitudinally extending hollow, each hollow having a longitudinally extending first hollow edge and a longitudinally extending second hollow edge, at least a portion of a section of the hollow normal to the base longitudinal axis having a generally curved, concave shape, wherein each hollow extends inwardly toward a central portion between the respective first and second hollow edges, the central portion of the hollow defining a longitudinally extending trough, which extends inwardly of the hollow, wherein the trough has a top surface that adjoins each of a first side trough surface and an opposed second side trough surface, wherein each respective first and second side trough surface has a lower edge that is integral with a portion of the adjoined hollow, and wherein each of the first side trough surface and the second side trough surface has a trough surface axis that extends in a plane normal to the base longitudinal axis;

a linear light source operatively mounted within a portion of the trough of the reflector assembly such that a longitudinal axis of the light source is positioned above a plane extending between the lower edges of the respective first and second side trough surfaces; and

a lens assembly comprising an elongated lens mounted to a portion of the reflector assembly,

wherein the reflector assembly controls high angle glare in a transverse direction by blocking high angle rays

from the lens, and wherein the lens controls high angle glare in the longitudinal direction optically.

90. A light fixture, comprising:

a reflector assembly extending along a longitudinal axis and defining a trough, the reflector assembly comprising:

an elongated base member having a first end edge, a spaced second end edge, a first longitudinally extending side edge, an opposed second longitudinally extending side edge, and a base surface, the longitudinal axis of the reflector assembly extending between the first end edge and the second end edge; and

a first end face and an opposed second end face, each of the respective first and second end faces having a top edge, the opposed first and second end faces each being positioned with respect to the base member such that a portion of the top edge of each respective end face is positioned in substantially overlying registration with a portion of the base surface, and wherein each of the respective first and second end faces has a face longitudinal axis that forms an obtuse angle with respect to the base longitudinal axis of the base member;

a linear light source operatively mounted within a portion of the trough of the reflector assembly; and

a lens assembly comprising an elongated lens mounted to a portion of the reflector assembly,

wherein the reflector assembly controls high angle glare in a transverse direction by blocking high angle rays from the lens, and wherein the lens controls high angle glare in the longitudinal direction optically.

* * * * *

EXHIBIT B

US00D541468S

(12) United States Design Patent

Mayfield, III et al.

(10) Patent No.: US D541,468 S
(45) Date of Patent: ** Apr. 24, 2007

(54) **LIGHT FIXTURE LENS**

(75) Inventors: **John T. Mayfield, III**, Loganville, GA (US); **Gary D. Trott**, Eatonton, GA (US); **Carl T. Gould**, Boulder, CO (US); **Christopher L. Sharp**, Conyers, GA (US)

(73) Assignee: **Acuity Brands, Inc.**, Atlanta, GA (US)

(**) Term: **14 Years**

(21) Appl. No.: **29/215,614**

(22) Filed: **Oct. 21, 2004**

(51) **LOC (8) Cl.** **26-99**
(52) **U.S. Cl.** **D26/120**
(58) **Field of Classification Search** D26/120, D26/78, 87, 113, 131, 121, 122, 119, 118, D26/77, 75, 76, 128; 362/217, 223, 263, 362/225, 364, 224, 218, 147, 257, 317; D13/184, D13/110
See application file for complete search history.

(56) **References Cited**

U.S. PATENT DOCUMENTS

2,643,328 A * 6/1953 Elmendorf 362/224
D180,611 S * 7/1957 McPhail D26/122
2,852,663 A 9/1958 Stuffer et al. 240/51.11
3,132,813 A * 5/1964 Izzi et al. 362/224

(Continued)

OTHER PUBLICATIONS

Lithonia Lighting, an Acuity Brands Company, Product Selection Guide, 8th ed. p. 14–93, 112–115.
Lithonia Lighting, an Acuity Brands Company, Direct/Indirect Lighting, pp. 1–15 (2002).
Lithonia Lighting, an Acuity Brands Company, Avante Recessed Direct/Indirect Lighting, pp. 1–3 (1997).
Lithonia Lighting, an Acuity Brands Company, Architectural Fluorescent Recessed Direct/Indirect Lighting, pp. 1–13 (1999).
Genlyte/Thomas, Lightolier, Alter Soft Lights, pp. 1–67 (2003).
Cooper Lighting, Metalux, p. 1–8 (1999).
Columbia Lighting, Stratus, pp. 1–9, (1998).
Focal Point, Luna, pp. 1–5 (1997).
Lithonia Lighting, an Acuity Brands Company, Product Selection Guide, 8th Edition, pp. 1–620 (2003).
Peerless–Lighting, Parallels, pp. 1–2 (2005).
Lithonia Lighting, an Acuity Brands Company, Avante, Recessed Direct/Indirect Lighting, pp. 1–4 (1996).
Lithonia Lighting, an Acuity Brands Company, Avante, Direct/Indirect General Lighting System, pp. 1–2 (1995).
Lightolier, CFI Fluorescent, Alter Soft Lights, 1–8 (1996).
Alter, pp. 1–6 (1994).

Primary Examiner—Freda S. Nunn
Assistant Examiner—Kevin K. Rudzinski
(74) *Attorney, Agent, or Firm*—Needle & Rosenberg, P.C.

(57) **CLAIM**

The ornamental design for a light fixture lens, as shown and described.

DESCRIPTION

FIG. **1** is a perspective view of a light fixture lens of the present invention;
FIG. **2** is a cross-sectional view of the light fixture lens of FIG. **1** taken along line **2—2** in FIG. **1**;
FIG. **3** is a bottom view of the light fixture lens of FIG. **1**; and,
FIG. **4** is a right side elevational view light fixture lens of FIG. **1**, the left side being a mirror image.
FIGS. **1, 3,** and **4** are broken away to indicate indeterminate length.

1 Claim, 2 Drawing Sheets

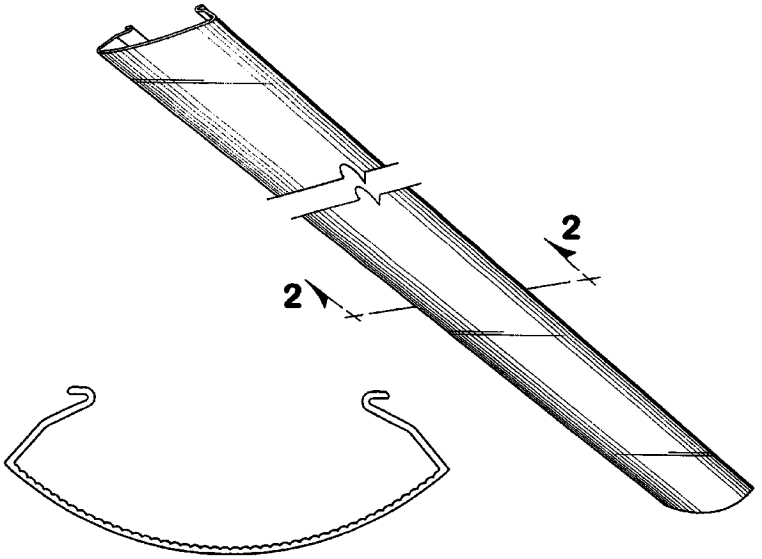

U.S. PATENT DOCUMENTS

3,265,887	A		8/1966	Wince	
3,368,071	A	*	2/1968	Bentzman	362/218
3,838,268	A		9/1974	Fabbri	240/9
3,934,135	A	*	1/1976	Szer	362/330
4,698,734	A		10/1987	Ngai	362/225
4,799,136	A		1/1989	Molnar	362/300
4,891,737	A	*	1/1990	Szymanek	362/223
4,939,627	A	*	7/1990	Herst et al.	362/299
D342,523	S	*	12/1993	Morgan et al.	D14/250
5,373,428	A	*	12/1994	Day	362/223
5,746,502	A		5/1998	Huang	362/223
5,769,534	A	*	6/1998	Lewis	362/367
D397,481	S	*	8/1998	Schafer	D26/85
D397,819	S		9/1998	Thorton, Jr.	D26/77
D399,588	S	*	10/1998	St. Ives	D26/76
D401,001	S	*	11/1998	Herst et al.	D26/77
D413,402	S	*	8/1999	Ranieri et al.	D26/74
5,971,571	A		10/1999	Rose	362/346
5,988,829	A		11/1999	Holder	362/217
5,988,836	A		11/1999	Swarens	362/364
D418,626	S	*	1/2000	Herst et al.	D26/118
D421,146	S	*	2/2000	Poulton	D26/76
6,053,625	A	*	4/2000	Bowker	362/348
D430,339	S	*	8/2000	Reo	D26/118
6,102,550	A		8/2000	Edwards, Jr.	362/221
D440,341	S		4/2001	Arumugasaamy	D26/85
6,238,065	B1		5/2001	Jones	362/339
6,257,735	B1	*	7/2001	Baar	362/217
6,280,052	B1		8/2001	White	362/225
6,419,375	B1		7/2002	Leadford et al.	362/297
D461,267	S		8/2002	Arumugasaamy	D26/85
6,435,697	B1	*	8/2002	Simmons et al.	362/219
6,454,442	B1		9/2002	Changaris	362/297
6,485,166	B1		11/2002	Fouke	362/340
D467,676	S		12/2002	Packer et al.	D26/72
D467,677	S		12/2002	Ries et al.	D26/88
6,505,953	B1		1/2003	Dahlen	362/217
6,505,959	B2		1/2003	Masaki et al.	362/339
6,511,213	B1	*	1/2003	Maley, Sr.	362/374
6,530,681	B2		3/2003	Sieczkowski	362/404
6,537,649	B1		3/2003	Martin et al.	428/172
D472,665	S		4/2003	Herst et al.	D26/113
D472,666	S		4/2003	Herst et al.	D26/113
D472,667	S		4/2003	Herst et al.	D26/113
D472,668	S		4/2003	Herst et al.	D26/113
D473,007	S		4/2003	Herst et al.	D26/113
D473,335	S		4/2003	Bohard et al.	D26/113
6,540,382	B1		4/2003	Simon	362/339
6,558,020	B1	*	5/2003	Holzer	362/221
D477,105	S	*	7/2003	Herst et al.	D26/76
D477,891	S		7/2003	Fritze et al.	D26/74
D480,168	S		9/2003	Herst et al.	D26/77
D480,172	S		9/2003	Herst et al.	D26/121
6,612,718	B1		9/2003	Packer et al.	362/267
6,612,723	B2		9/2003	Futhey et al.	362/339
D480,500	S		10/2003	Herst et al.	D26/121
D480,501	S		10/2003	Herst et al.	D26/121
D480,502	S		10/2003	Herst et al.	D26/121
D480,503	S		10/2003	Herst et al.	D26/121
D480,530	S		10/2003	Herst et al.	121/77
D480,830	S		10/2003	Sieczkowski	D26/118
D481,488	S		10/2003	Herst et al.	D26/121
D481,489	S		10/2003	Cline et al.	D26/128
6,637,912	B2		10/2003	Arumugasaamy et al.	362/327
D481,820	S		11/2003	Watt	D26/77
6,652,118	B2		11/2003	Shemitz et al.	362/225
D483,510	S		12/2003	Fritze et al.	D26/75
6,655,819	B2		12/2003	Loga et al.	362/263
D485,932	S		1/2004	Crane	D26/76
D487,527	S		3/2004	Sieczkowski	D26/76
6,709,131	B1		3/2004	Herst et al.	362/223
6,726,345	B2		4/2004	Arumugasaamy et al.	362/327
2002/0080615	A1		6/2002	Marshall et al.	362/333
2002/0181229	A1	*	12/2002	Wei	362/147

* cited by examiner

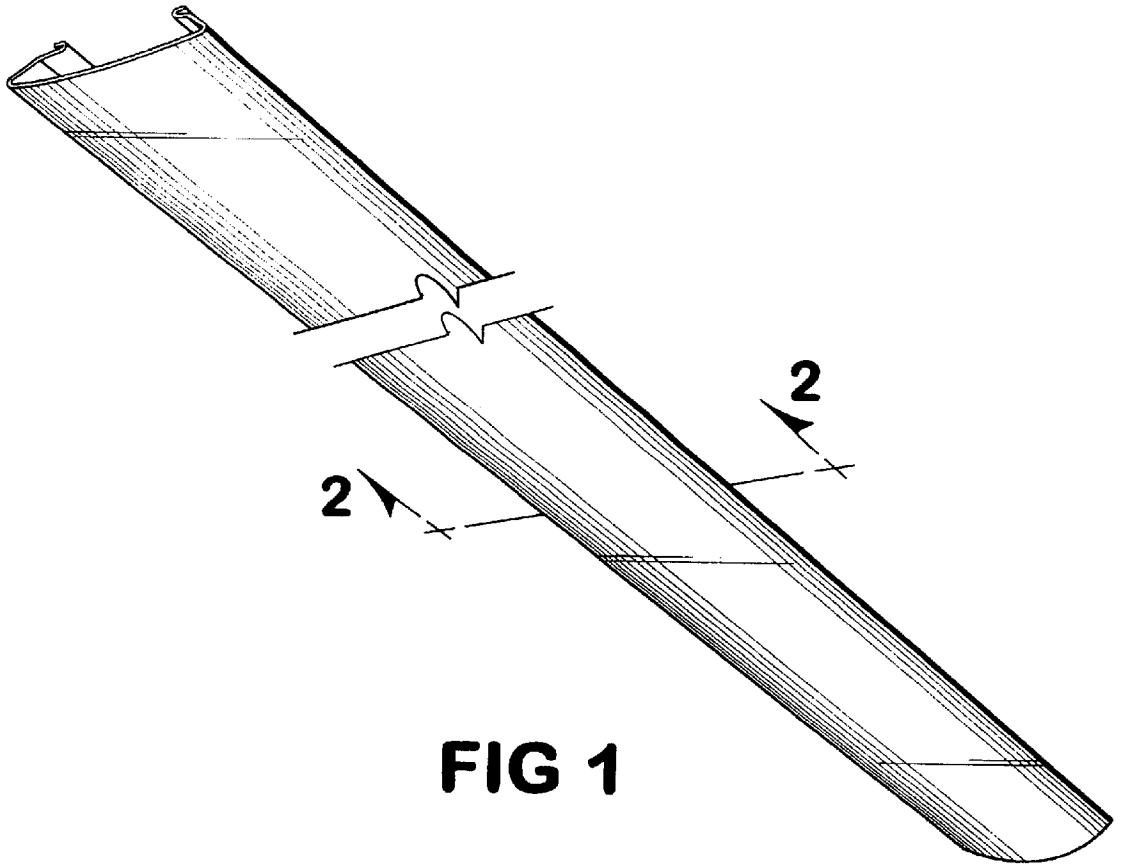

FIG 1



FIG 2

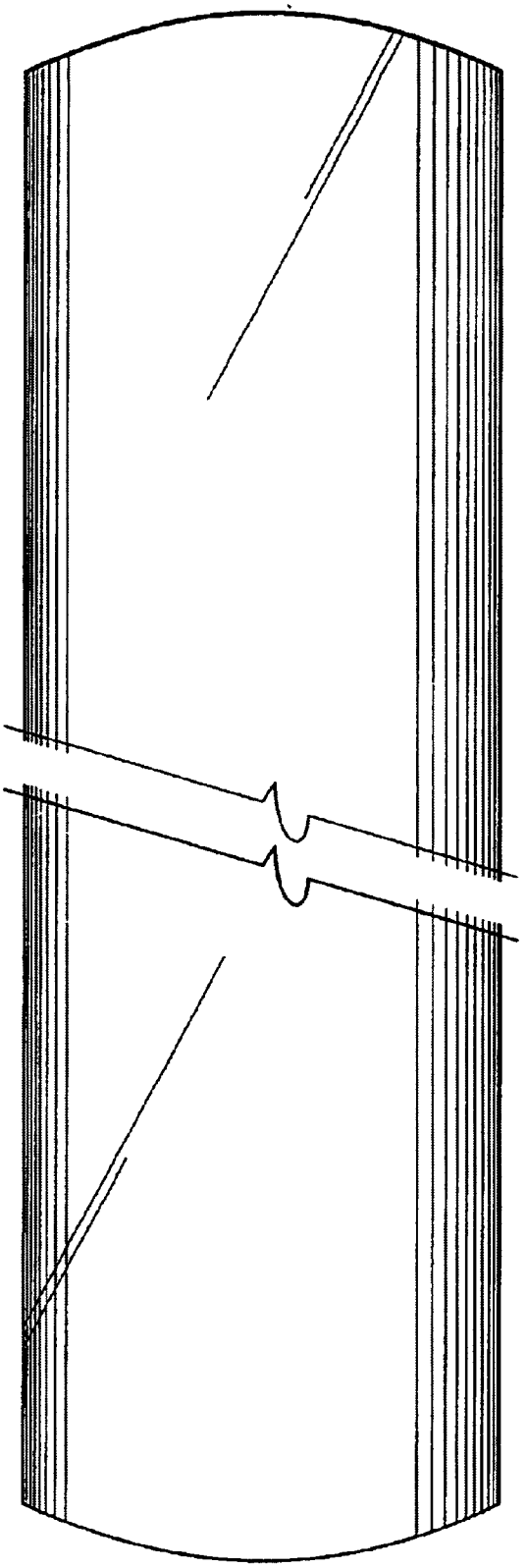

FIG 3

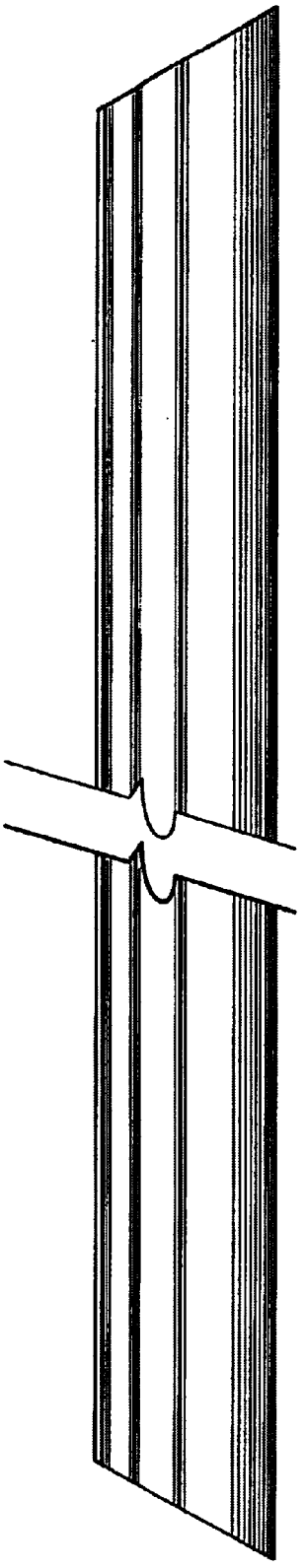

FIG 4

EXHIBIT C

US00D544633S

(12) United States Design Patent

Mayfield, III et al.

(10) Patent No.: US D544,633 S
(45) Date of Patent: ** Jun. 12, 2007

(54) **LIGHT FIXTURE**

(75) Inventors: **John T. Mayfield, III**, Loganville, GA (US); **Carl T. Gould**, Boulder, CO (US); **Kevin Leadford**, Evergreen, CO (US); **Stephen H. Lydecker**, Snellville, GA (US)

(73) Assignee: **Acuity Brands, Inc.**, Atlanta, GA (US)

(**) Term: **14 Years**

(21) Appl. No.: **29/215,587**

(22) Filed: **Oct. 21, 2004**

(51) **LOC (8) Cl.** **26-99**
(52) **U.S. Cl.** **D26/118**
(58) **Field of Classification Search** D26/118, D26/76, 75, 152, 138, 77, 121, 74, 142, 128, D26/113, 119, 120, 122; 362/223, 263, 225, 362/339, 404, 219, 217, 364, 291, 328, 257, 362/260, 317, 326, 330, 341
See application file for complete search history.

(56) **References Cited**

U.S. PATENT DOCUMENTS

D85,382	S	*	10/1931	Guth	D26/24
1,888,103	A	*	11/1932	Guth	362/348
D125,001	S	*	2/1941	Klingsick	D26/78
D132,296	S	*	5/1942	Hoeveler	D26/122
D132,786	S	*	6/1942	Netting	D26/78
2,323,073	A	*	6/1943	Netting	362/225
2,339,100	A	*	1/1944	Netting	362/219
D156,743	S	*	1/1950	Kennedy	D26/59
2,852,663	A		9/1958	Stuffer et al.	240/51.11
3,125,301	A	*	3/1964	Slotter	362/217
3,265,887	A		8/1966	Wince	
3,270,194	A	*	8/1966	Lee	362/218
3,838,268	A		9/1974	Fabbri	240/9
3,860,903	A	*	1/1975	Van Steenhoven	362/279
4,499,529	A	*	2/1985	Figueroa	362/283
D284,110	S	*	6/1986	Mullins	D26/76
4,622,624	A	*	11/1986	McCarthy et al.	362/217
4,698,734	A		10/1987	Ngai	362/225
4,799,136	A		1/1989	Molnar	362/300
D300,873	S	*	4/1989	Thompson et al.	D26/74

(Continued)

OTHER PUBLICATIONS

Peerless-Lighting, Parallels, pp. 1-2 (2005).

(Continued)

Primary Examiner—Freda S. Nunn
Assistant Examiner—Kevin K. Rudzinski
(74) *Attorney, Agent, or Firm*—Needle & Rosenberg, P.C.

(57) **CLAIM**

The ornamental design for a light fixture, as shown and described.

DESCRIPTION

FIG. **1** is a perspective view of a light fixture of the present invention;

FIG. **2** is a bottom plan view of the light fixture of FIG. **1**;

FIG. **3** is a cross-sectional view of the light fixture of FIG. **1** taken along line **3-3** in FIG. **2**;

FIG. **4** is a cross-sectional view of the light fixture of FIG. **1** taken along line **4-4** in FIG. **2**;

FIG. **5** is a perspective view of a second embodiment of the light fixture of the present invention;

FIG. **6** is a bottom plan view of the light fixture of FIG. **5**;

FIG. **7** is a cross-sectional view of the light fixture of FIG. **5** taken along line **7-7** in FIG. **6**; and,

FIG. **8** is a cross-sectional view of the light fixture of FIG. **5** taken along line **8-8** in FIG. **6**.

The broken lines are shown for illustrative purposes only and form no part of the claimed design.

The top of the light fixture is unornamented and forms no part of the design.

1 Claim, 8 Drawing Sheets

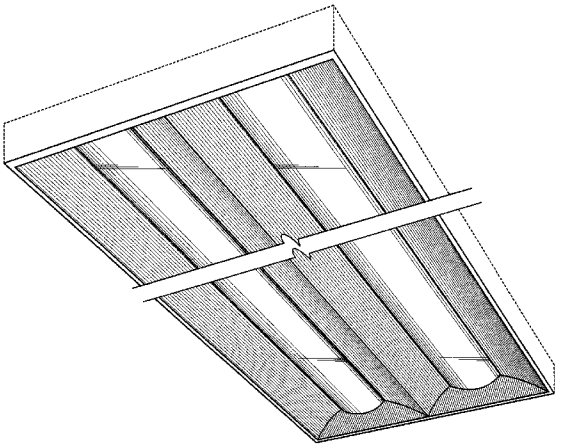

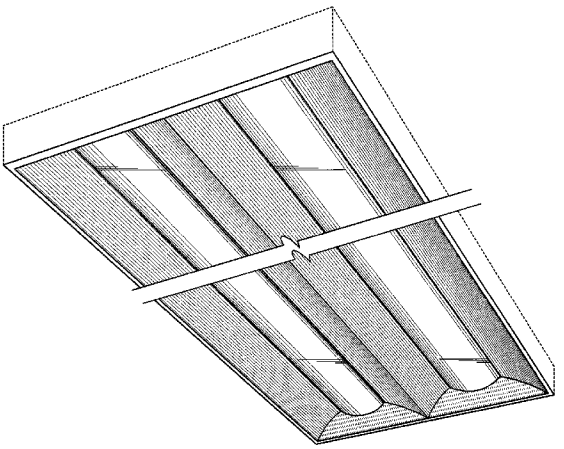

U.S. PATENT DOCUMENTS

5,062,030	A *	10/1991	Figueroa	362/346
5,192,129	A *	3/1993	Figueroa	362/346
D348,950	S *	7/1994	Herst et al.	D26/85
D351,481	S *	10/1994	Cole, Jr.	D26/76
5,555,162	A *	9/1996	Shemitz	362/225
5,570,947	A *	11/1996	Felland	362/148
5,746,502	A	5/1998	Huang	362/223
D397,819	S	9/1998	Thorton, Jr.	D26/77
D399,586	S *	10/1998	Ranieri et al.	D26/74
D407,473	S *	3/1999	Wimbock	D23/328
D411,641	S *	6/1999	Ranieri et al.	D26/74
D413,402	S *	8/1999	Ranieri et al.	D26/74
5,971,571	A	10/1999	Rose	362/346
5,988,829	A	11/1999	Holder	362/217
5,988,836	A	11/1999	Swarens	362/364
6,102,550	A	8/2000	Edwards, Jr.	362/221
D440,341	S	4/2001	Arumugasaamy	D26/85
6,238,065	B1	5/2001	Jones	362/339
6,280,052	B1	8/2001	White	362/225
6,419,375	B1	7/2002	Leadford et al.	362/297
D461,267	S	8/2002	Arumugasaamy	D26/85
6,454,442	B1	9/2002	Changaris	362/297
6,485,166	B1	11/2002	Fouke	362/340
D467,676	S	12/2002	Packer et al.	D26/72
D467,677	S	12/2002	Ries et al.	D26/88
6,505,953	B1	1/2003	Dahlen	362/217
6,505,959	B2	1/2003	Masaki et al.	362/339
6,530,681	B2	3/2003	Sieczkowski	362/404
6,537,649	B1	3/2003	Martin et al.	428/172
D472,665	S	4/2003	Herst et al.	D26/113
D472,666	S	4/2003	Herst et al.	D26/113
D472,667	S	4/2003	Herst et al.	D26/113
D472,668	S	4/2003	Herst et al.	D26/113
D473,007	S	4/2003	Herst et al.	D26/113
D473,335	S	4/2003	Bohard et al.	D26/113
6,540,382	B1	4/2003	Simon	362/339
D477,891	S	7/2003	Fritze et al.	D26/74
D480,168	S	9/2003	Herst et al.	D26/77
D480,172	S	9/2003	Herst et al.	D26/121
6,612,718	B1	9/2003	Packer et al.	362/267
6,612,723	B2	9/2003	Futhey et al.	362/339
D480,500	S	10/2003	Herst et al.	D26/121
D480,501	S	10/2003	Herst et al.	D26/121
D480,502	S	10/2003	Herst et al.	D26/121
D480,503	S	10/2003	Herst et al.	D26/121
D480,530	S	10/2003	Herst et al.	121/77
D480,830	S	10/2003	Sieczkowski	D26/118
D481,488	S	10/2003	Herst et al.	D26/121
D481,489	S	10/2003	Cline et al.	D26/128
6,637,912	B2	10/2003	Arumugasaamy et al.	362/327
D481,820	S	11/2003	Watt	D26/77
6,652,118	B2	11/2003	Shemitz et al.	362/225
D483,510	S	12/2003	Fritze et al.	D26/75
6,655,819	B2	12/2003	Loga et al.	362/263
D485,932	S	1/2004	Crane	D26/76
D487,527	S	3/2004	Sieczkowski	D26/76
6,709,131	B1	3/2004	Herst et al.	362/223
6,726,345	B2	4/2004	Arumugusaamy et al.	362/327
D496,121	S *	9/2004	Santoro	D26/74
2002/0080615	A1	6/2002	Marshall et al.	362/333

OTHER PUBLICATIONS

Lithonia Lighting, an Acuity Brands Company, Avante, Recessed Direct/Indirect Lighting, pp. 1-4 (1996).

Lithonia Lighting, an Acuity Brands Company, Avante, Direct/Indirect General Lighting System, pp. 1-2 (1995).

Lightolier, CFI Fluorescent, Alter Soft Lights, 1-8 (1996).

Alter, pp. 1-6 (1994).

Lithonia Lighting, an Acuity Brands Company, Product Selection Guide, 8th Edition, pp. 1-620 (2003).

Lithonia Lighting, an Acuity Brands Company, Avante Recessed Direct/Indirect Lighting, pp. 1-3 (1997).

Lithonia Lighting, an Acuity Brands Company, Architectural Fluorescent Recessed Direct/Indirect Lighting, pp. 1-13 (1999).

Genlyte/Thomas, Lightolier, Alter Soft Lights, pp. 1-67 (2003).

Cooper Lighting, Metalux, p. 1-8 (1999).

Columbia Lighting, Stratus, pp. 1-9, (1998).

Focal Point, Luna, pp. 1-5 (1997).

Lithonia Lighting, an Acuity Brands Company, Direct/Indirect Lighting, pp. 1-15 (2002).

Lithonia Lighting, an Acuity Brands Company, Product Selection Guide, 8th ed. p. 14-93, 112-115.

* cited by examiner

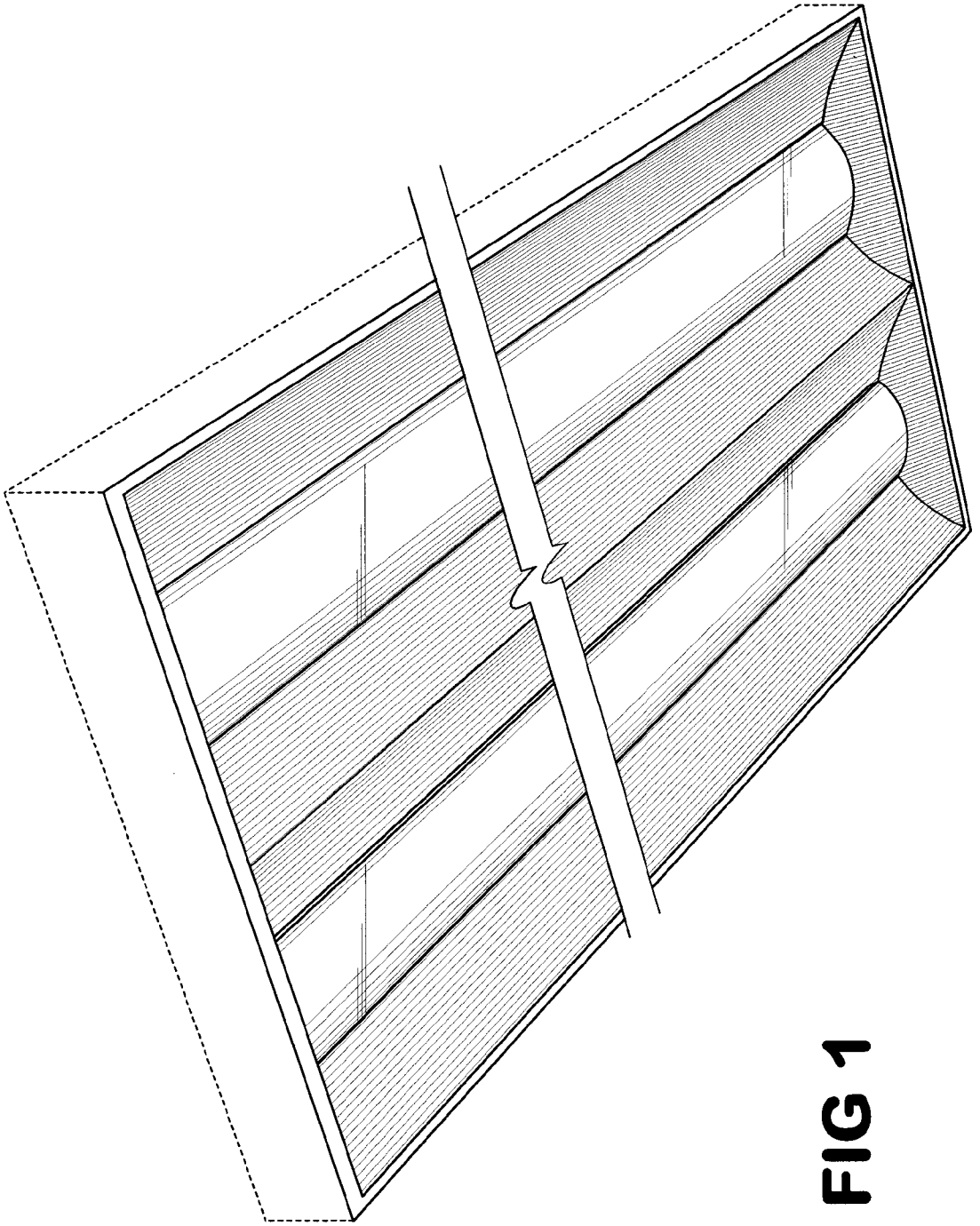

FIG 1

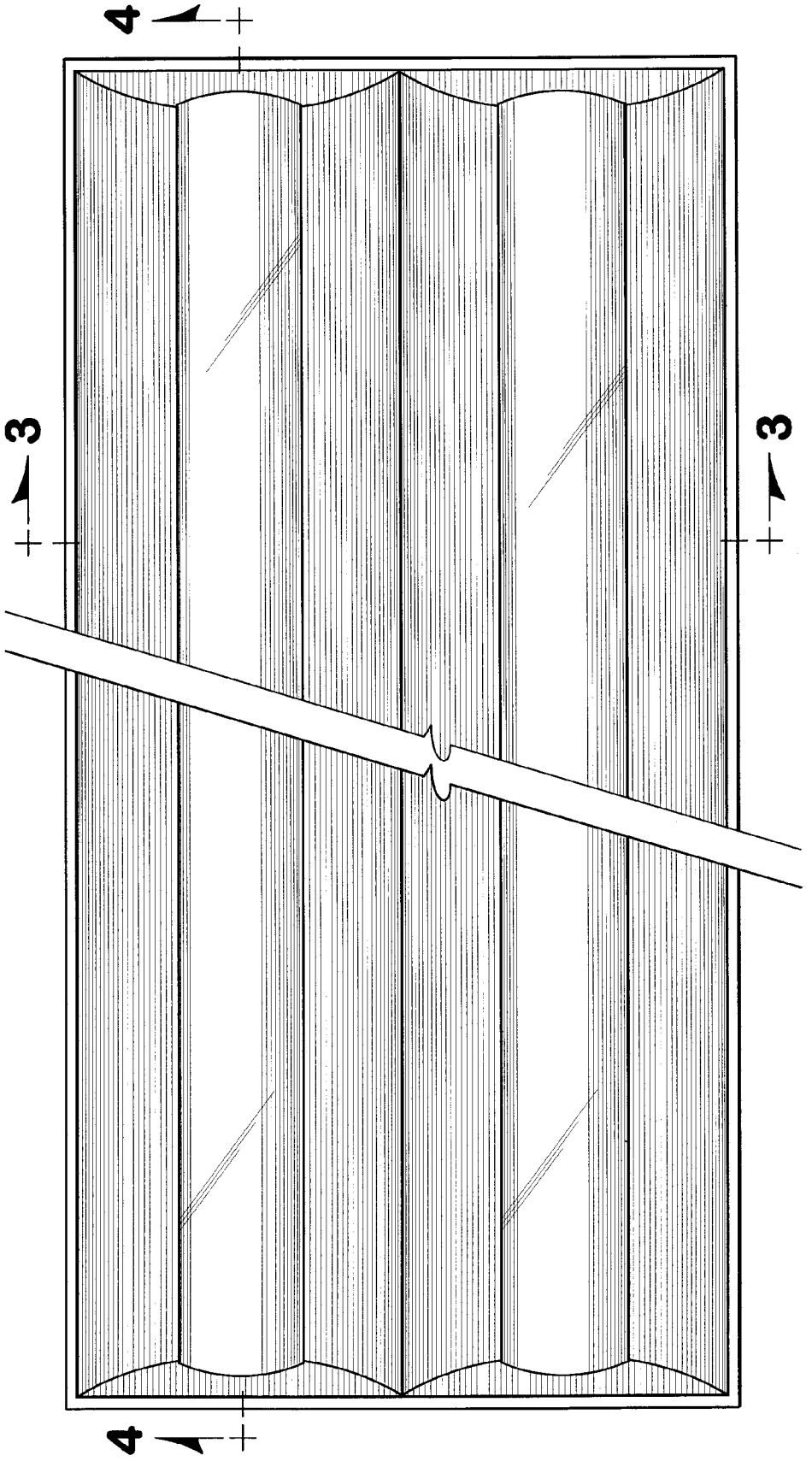

FIG 2

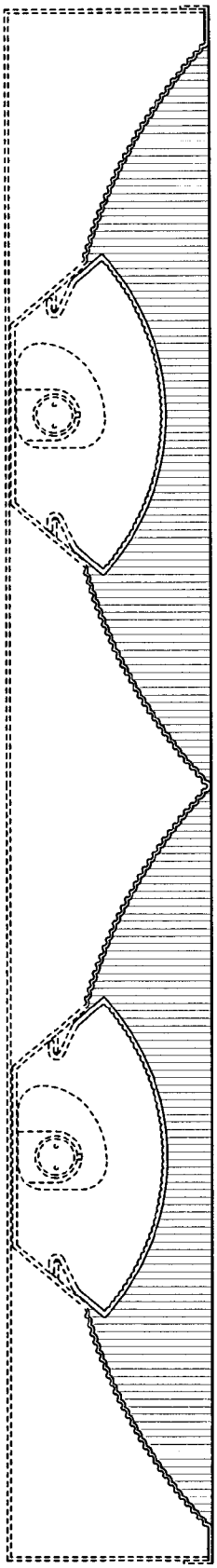

FIG 3

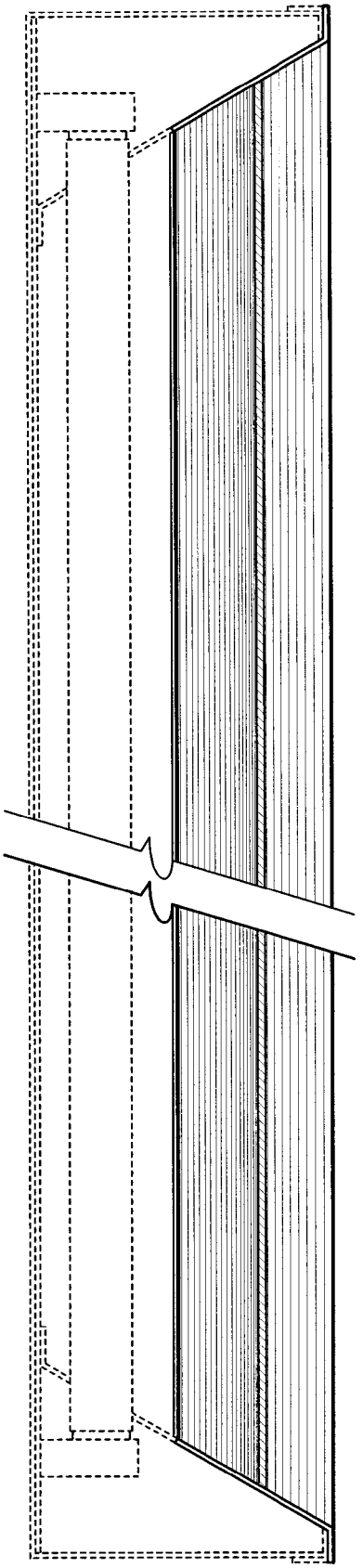

FIG 4

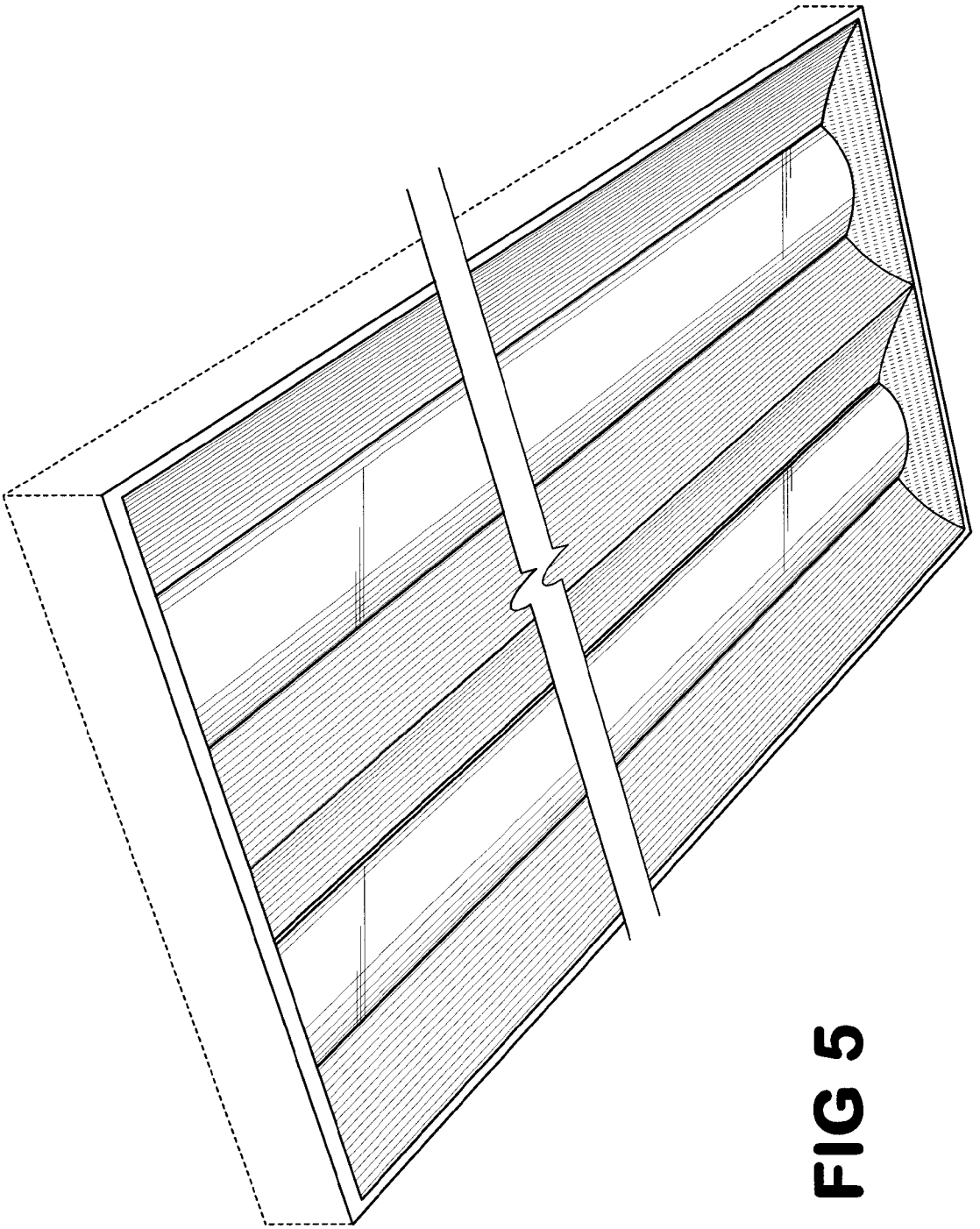

FIG 5

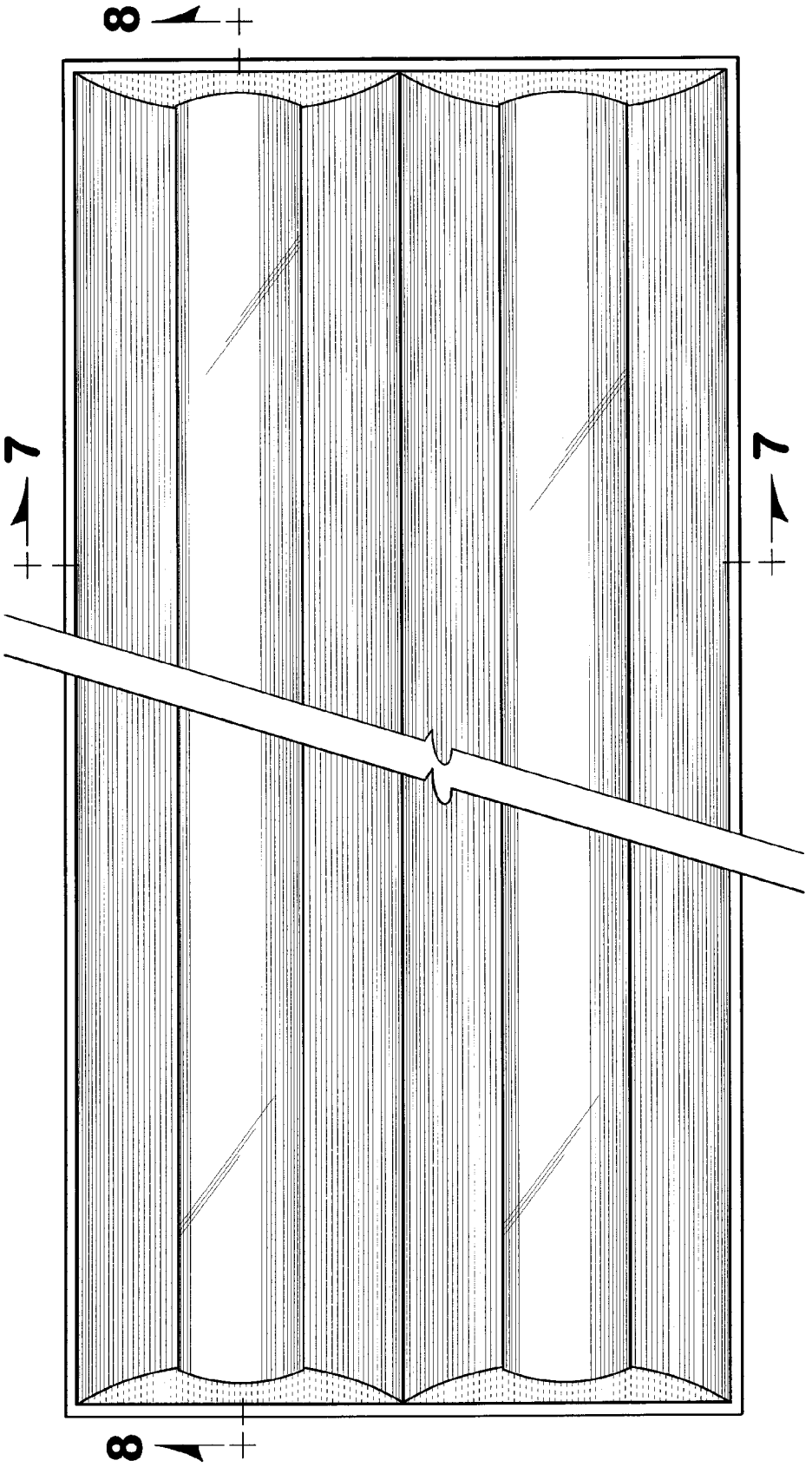

FIG 6

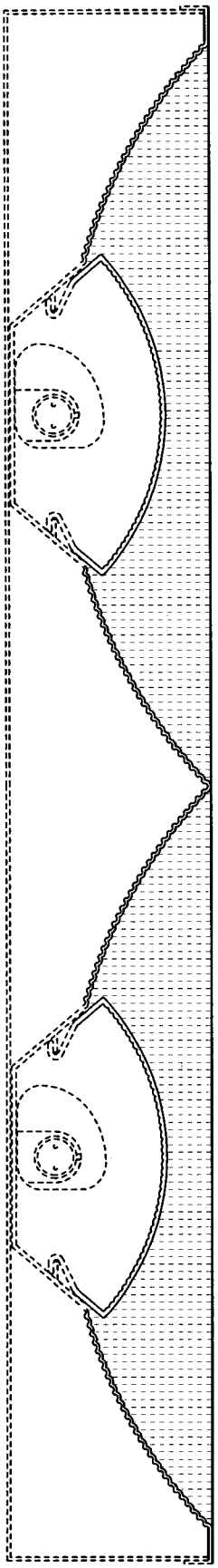

FIG 7

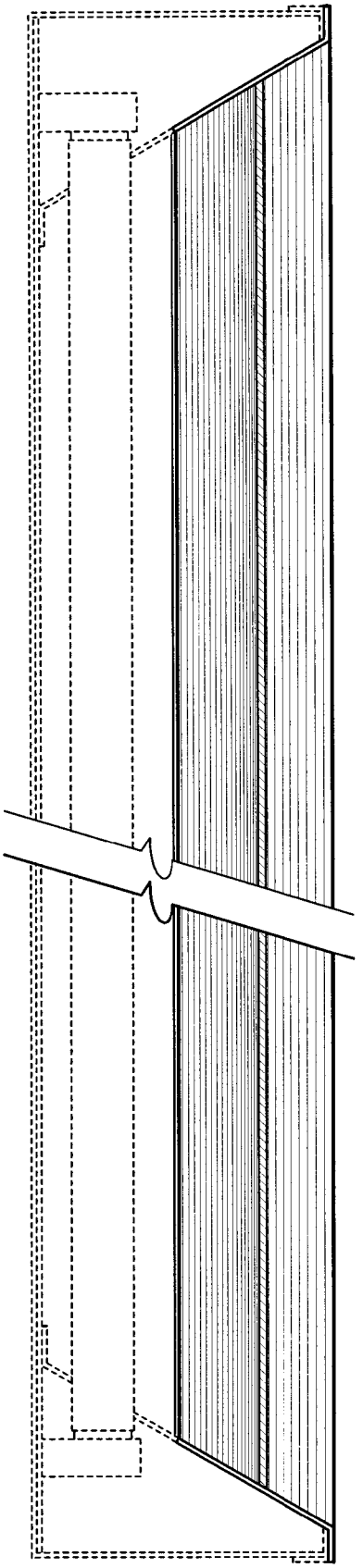

FIG 8

EXHIBIT D

US00D544634S

(12) United States Design Patent

Mayfield, III et al.

(10) Patent No.: US D544,634 S
(45) Date of Patent: ** Jun. 12, 2007

(54) **LIGHT FIXTURE**

(75) Inventors: **John T. Mayfield, III**, Loganville, GA (US); **Carl T. Gould**, Boulder, CO (US); **Kevin Leadford**, Evergreen, CO (US); **Stephen H. Lydecker**, Snellville, GA (US)

(73) Assignee: **Acuity Brands, Inc.**, Atlanta, GA (US)

(**) Term: **14 Years**

(21) Appl. No.: **29/215,588**

(22) Filed: **Oct. 21, 2004**

(51) **LOC (8) Cl.** **26-99**
(52) **U.S. Cl.** **D26/118**
(58) **Field of Classification Search** D26/118, D26/76, 75, 152, 138, 77, 121, 74, 142, 128, D26/113, 119, 120, 122; 362/223, 263, 225, 362/339, 404, 219, 217, 364, 291, 328, 257, 362/260, 317, 326, 330, 341
See application file for complete search history.

(56) **References Cited**

U.S. PATENT DOCUMENTS

D85,382	S	*	10/1931	Guth	D26/24
1,888,103	A	*	11/1932	Guth	362/348
D125,001	S	*	2/1941	Klingsick	D26/78
D132,296	S	*	5/1942	Hoeveler	D26/122
D132,786	S	*	6/1942	Netting	D26/78
2,323,073	A	*	6/1943	Netting	362/225
2,339,100	A	*	1/1944	Netting	362/219
D156,743	S	*	1/1950	Kennedy	D26/59
2,852,663	A		9/1958	Stuffer et al.	240/51.11
3,125,301	A	*	3/1964	Slotter	362/217
3,265,887	A		8/1966	Wince	
3,270,194	A	*	8/1966	Lee	362/218
3,838,268	A		9/1974	Fabbri	240/9
3,860,903	A	*	1/1975	Van Steenhoven	362/279
4,499,529	A	*	2/1985	Figueroa	362/283
D284,110	S	*	6/1986	Mullins	D26/76
4,622,624	A	*	11/1986	McCarthy et al.	362/217
4,698,734	A		10/1987	Ngai	362/225
4,799,136	A		1/1989	Molnar	362/300
D300,873	S	*	4/1989	Thompson et al.	D26/74
5,062,030	A	*	10/1991	Figueroa	362/346
5,192,129	A	*	3/1993	Figueroa	362/346
D348,950	S	*	7/1994	Herst et al.	D26/85
D351,481	S	*	10/1994	Cole, Jr.	D26/76
5,555,162	A	*	9/1996	Shemitz	362/225
5,570,947	A	*	11/1996	Felland	362/148
5,746,502	A		5/1998	Huang	362/223
D397,819	S		9/1998	Thorton, Jr.	D26/77
D399,586	S	*	10/1998	Ranieri et al.	D26/74
D407,473	S	*	3/1999	Wimbock	D23/328
D411,641	S	*	6/1999	Ranieri et al.	D26/74
D413,402	S	*	8/1999	Ranieri et al.	D26/74

(Continued)

OTHER PUBLICATIONS

Peerless-Lighting, Parallels, pp. 1-2 (2005).

(Continued)

Primary Examiner—Freda S. Nunn
Assistant Examiner—Kevin K. Rudzinski
(74) *Attorney, Agent, or Firm*—Needle & Rosenberg, P.C.

(57) **CLAIM**

The ornamental design for a light fixture, as shown and described.

DESCRIPTION

FIG. **1** is a perspective view of a light fixture of the present invention;

FIG. **2** is a bottom plan view of the light fixture of FIG. **1**;

FIG. **3** is a cross-sectional view of the light fixture of FIG. **1** taken along line **3-3** in FIG. **2**; and,

FIG. **4** is a cross-sectional view of the light fixture of FIG. **1** taken along line **4-4** in FIG. **2**.

The broken lines are shown for illustrative purposes only and form no part of the claimed design. The top of the light fixture is unornamented and forms no part of the design.

1 Claim, 4 Drawing Sheets

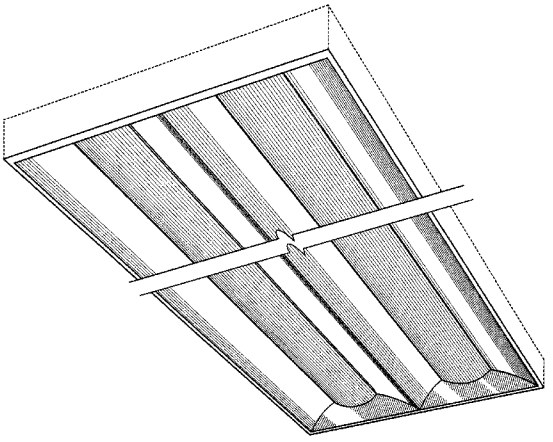

U.S. PATENT DOCUMENTS

5,971,571	A	10/1999	Rose	362/346
5,988,829	A	11/1999	Holder	362/217
5,988,836	A	11/1999	Swarens	362/364
6,102,550	A	8/2000	Edwards, Jr.	362/221
D440,341	S	4/2001	Arumugasaamy	D26/85
6,238,065	B1	5/2001	Jones	362/339
6,280,052	B1	8/2001	White	362/225
6,419,375	B1	7/2002	Leadford et al.	362/297
D461,267	S	8/2002	Arumugasaamy	D26/85
6,454,442	B1	9/2002	Changaris	362/297
6,485,166	B1	11/2002	Fouke	362/340
D467,676	S	12/2002	Packer et al.	D26/72
D467,677	S	12/2002	Ries et al.	D26/88
6,505,953	B1	1/2003	Dahlen	362/217
6,505,959	B2	1/2003	Masaki et al.	362/339
6,530,681	B2	3/2003	Sieczkowski	362/404
6,537,649	B1	3/2003	Martin et al.	428/172
D472,665	S	4/2003	Herst et al.	D26/113
D472,666	S	4/2003	Herst et al.	D26/113
D472,667	S	4/2003	Herst et al.	D26/113
D472,668	S	4/2003	Herst et al.	D26/113
D473,007	S	4/2003	Herst et al.	D26/113
D473,335	S	4/2003	Bohard et al.	D26/113
6,540,382	B1	4/2003	Simon	362/339
D477,891	S	7/2003	Fritze et al.	D26/74
D480,168	S	9/2003	Herst et al.	D26/77
D480,172	S	9/2003	Herst et al.	D26/121
6,612,718	B1	9/2003	Packer et al.	362/267
6,612,723	B2	9/2003	Futhey et al.	362/339
D480,500	S	10/2003	Herst et al.	D26/121
D480,501	S	10/2003	Herst et al.	D26/121
D480,502	S	10/2003	Herst et al.	D26/121
D480,503	S	10/2003	Herst et al.	D26/121
D480,530	S	10/2003	Herst et al.	121/77
D480,830	S	10/2003	Sieczkowski	D26/118
D481,488	S	10/2003	Herst et al.	D26/121
D481,489	S	10/2003	Cline et al.	D26/128
6,637,912	B2	10/2003	Arumugasaamy et al.	362/327
D481,820	S	11/2003	Watt	D26/77
6,652,118	B2	11/2003	Shemitz et al.	362/225
D483,510	S	12/2003	Fritze et al.	D26/75
6,655,819	B2	12/2003	Loga et al.	362/263
D485,932	S	1/2004	Crane	D26/76
D487,527	S	3/2004	Sieczkowski	D26/76
6,709,131	B1	3/2004	Herst et al.	362/223
6,726,345	B2	4/2004	Arumugusaamy et al.	362/327
D496,121	S *	9/2004	Santoro	D26/74
2002/0080615	A1	6/2002	Marshall et al.	362/333

OTHER PUBLICATIONS

Lithonia Lighting, an Acuity Brands Company, Avante, Recessed Direct/Indirect Lighting, pp. 1-4 (1996).
Lithonia Lighting, an Acuity Brands Company, Avante; Direct/Indirect General Lighting System, pp. 1-2 (1995).
Lightolier, CFI Fluorescent, Alter Soft Lights, 1-8 (1996).
Alter, pp. 1-6 (1994).
Lithonia Lighting, an Acuity Brands Company, Product Selection Guide, 8th Edition, pp. 1-620 (2003).
Lithonia Lighting, an Acuity Brands Company, Avante Recessed Direct/Indirect Lighting, pp. 1-3 (1997).
Lithonia Lighting, an Acuity Brands Company, Architectural Fluorescent Recessed Direct/Indirect Lighting, pp. 1-13 (1999).
Genlyte/Thomas, Lightolier, Alter Soft Lights, pp. 1-67 (2003).
Cooper Lighting, Metalux, pp. 1-8 (1999).
Columbia Lighting, Stratus, pp. 1-9, (1998).
Focal Point, Luna, pp. 1-5 (1997).
Lithonia Lighting, an Acuity Brands Company, Direct/Indirect Lighting, pp. 1-15 (2002).
Lithonia Lighting, an Acuity Brands Company, Product Selection Guide, 8th ed. pp. 14-93, 112-115.

* cited by examiner

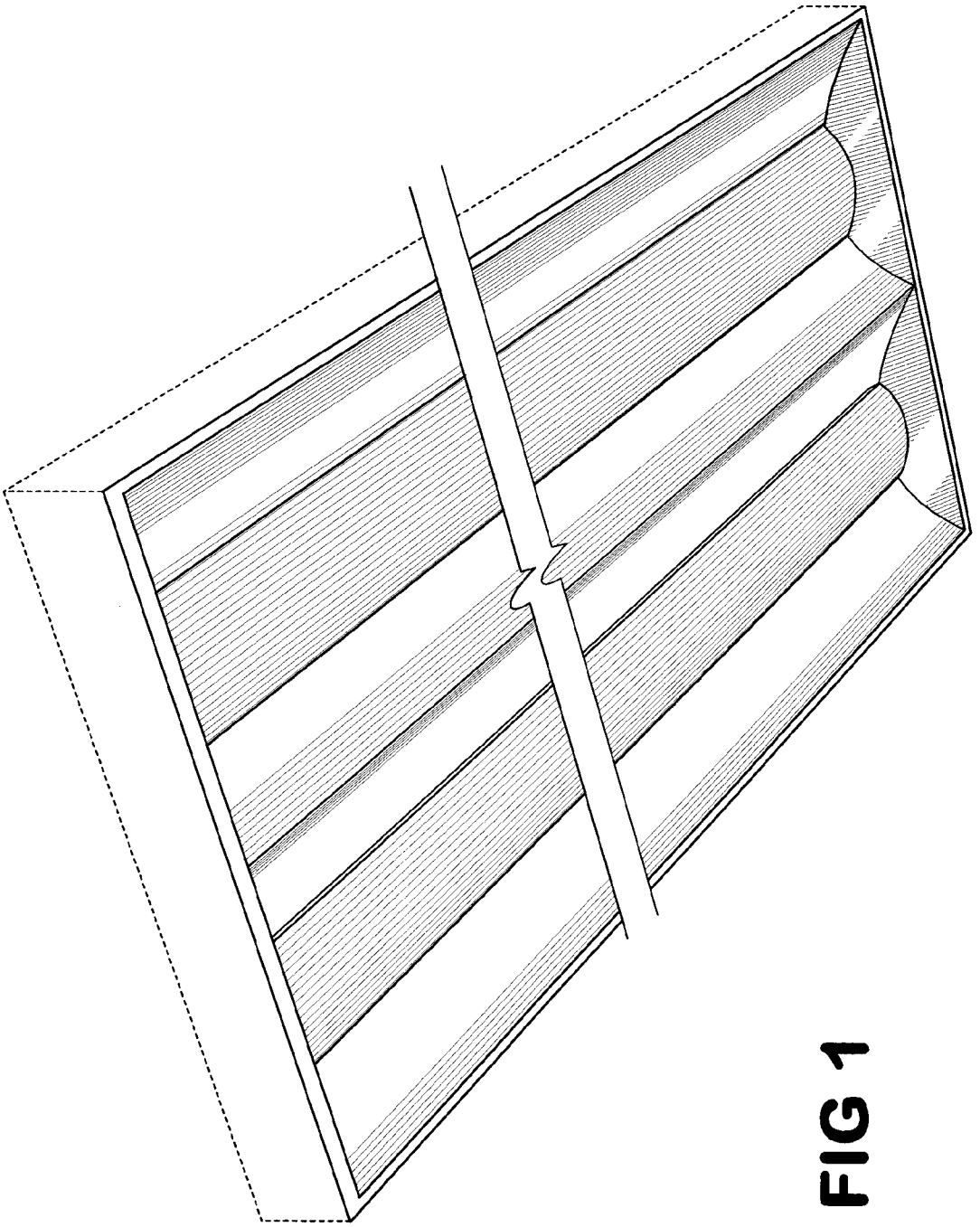

FIG 1

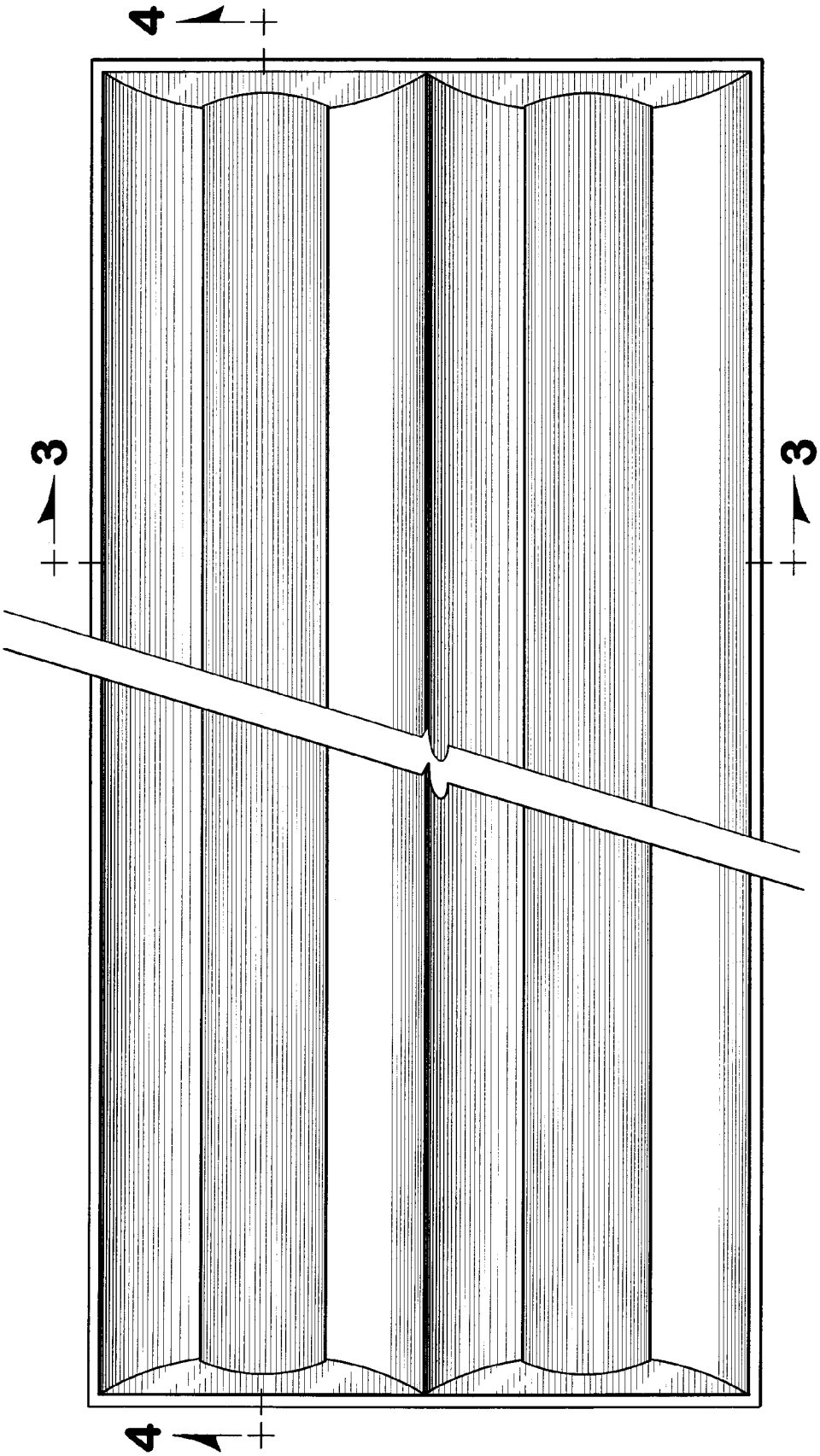

FIG 2

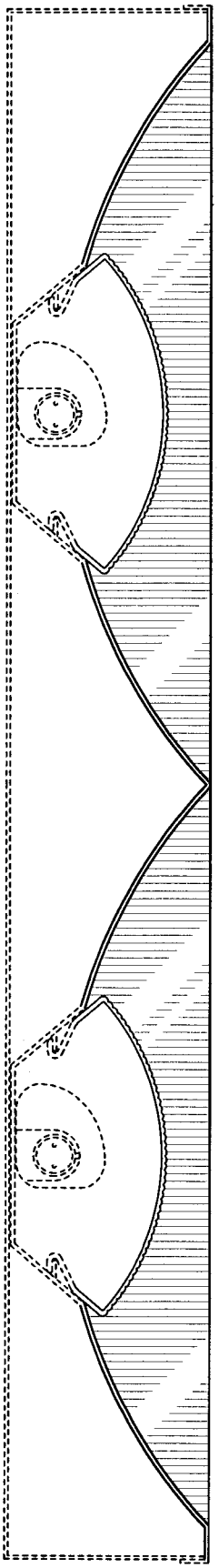

FIG 3

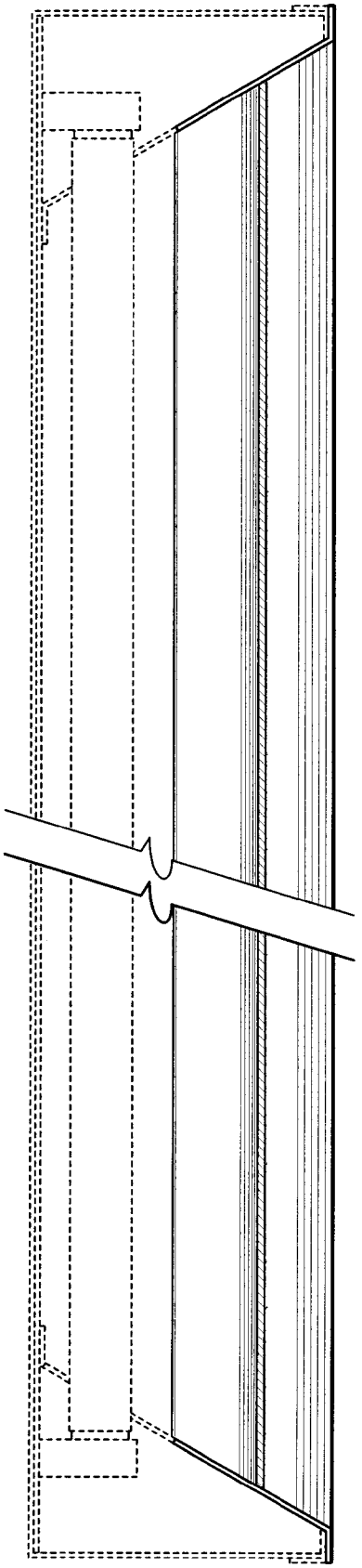

FIG 4

EXHIBIT E

US00D544992S

(12) United States Design Patent

Mayfield, III et al.

(10) Patent No.: US D544,992 S
(45) Date of Patent: ** Jun. 19, 2007

(54) **LIGHT FIXTURE**

(75) Inventors: **John T. Mayfield, III**, Loganville, GA (US); **Carl T. Gould**, Boulder, CO (US); **Kevin Leadford**, Evergreen, CO (US); **Stephen H. Lydecker**, Snellville, GA (US)

(73) Assignee: **Acuity Brands, Inc.**, Atlanta, GA (US)

(**) Term: **14 Years**

(21) Appl. No.: **29/215,568**

(22) Filed: **Oct. 21, 2004**

(51) **LOC (8) Cl.** **26-99**
(52) **U.S. Cl.** **D26/118**
(58) **Field of Classification Search** D26/118, D26/76, 75, 152, 138, 77, 121, 74, 142, 128, D26/113, 119, 120, 122; 362/223, 263, 225, 362/339, 404, 219, 217, 364, 291, 328, 257, 362/260, 317, 326, 330, 341
See application file for complete search history.

(56) **References Cited**

U.S. PATENT DOCUMENTS

D85,382	S	*	10/1931	Guth	D26/24
1,888,103	A	*	11/1932	Guth	362/348
D125,001	S	*	2/1941	Klingsick	D26/78
D132,296	S	*	5/1942	Hoeveler	D26/122
D132,786	S	*	6/1942	Netting	D26/78
2,323,073	A	*	6/1943	Netting	362/225
2,339,100	A	*	1/1944	Netting	362/219
D156,743	S	*	1/1950	Kennedy	D26/59
2,852,663	A		9/1958	Stuffer et al.	240/51.11
3,125,301	A	*	3/1964	Stotter	362/217
3,265,887	A		8/1966	Wince	
3,270,194	A	*	8/1966	Lee	362/218
3,838,268	A		9/1974	Fabbri	240/9
3,860,903	A	*	1/1975	Van Steenhoven	362/279
4,499,529	A	*	2/1985	Figueroa	362/283
D284,110	S	*	6/1986	Mullins	D26/76
4,622,624	A	*	11/1986	McCarthy et al.	362/217
4,698,734	A		10/1987	Ngai	362/225
4,799,136	A		1/1989	Molnar	362/300
D300,873	S	*	4/1989	Thompson et al.	D26/74
5,062,030	A	*	10/1991	Figueroa	362/346
5,192,129	A	*	3/1993	Figueroa	362/346
D348,950	S	*	7/1994	Herst et al.	D26/85
D351,481	S	*	10/1994	Cole, Jr.	D26/76
5,555,162	A	*	9/1996	Shemitz	362/225
5,570,947	A	*	11/1996	Felland	362/148
5,746,502	A		5/1998	Huang	362/223
D397,819	S		9/1998	Thorton, Jr.	D26/77
D399,586	S	*	10/1998	Ranieri et al.	D26/74
D407,473	S	*	3/1999	Wimbock	D23/328
D411,641	S	*	6/1999	Ranieri et al.	D26/74
D413,402	S	*	8/1999	Ranieri et al.	D26/74
5,971,571	A		10/1999	Rose	362/346

(Continued)

OTHER PUBLICATIONS

Peerless-Lighting, Parallels, pp. 1-2 (2005).

(Continued)

Primary Examiner—Freda S. Nunn
Assistant Examiner—Kevin K. Rudzinski
(74) *Attorney, Agent, or Firm*—Needle & Rosenberg, P.C.

(57) **CLAIM**

The ornamental design for a light fixture, as shown and described.

DESCRIPTION

FIG. **1** is a perspective view of a light fixture of the present invention;

FIG. **2** is a bottom plan view of the light fixture of FIG. **1**;

FIG. **3** is a cross-sectional view of the light fixture of FIG. **1** taken along line **3-3** in FIG. **2**; and,

FIG. **4** is a cross-sectional view of the light fixture of FIG. **1** taken along line **4-4** in FIG. **2**.

The broken lines are shown for illustrative purposes only and form no part of the claimed design. The top of the light fixture is unornamented and forms no part of the design.

1 Claim, 4 Drawing Sheets

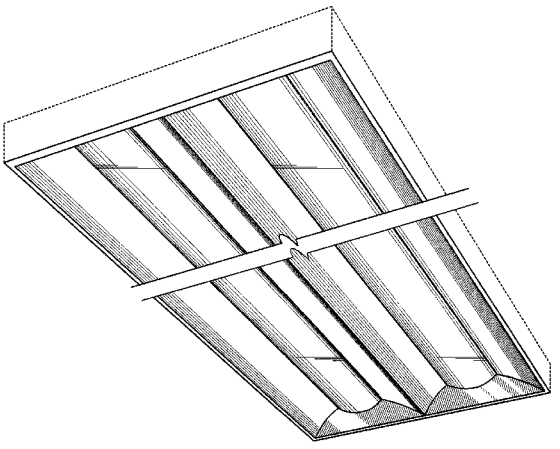

U.S. PATENT DOCUMENTS

5,988,829	A	11/1999	Holder	362/217
5,988,836	A	11/1999	Swarens	362/364
6,102,550	A	8/2000	Edwards, Jr.	362/221
D440,341	S	4/2001	Arumugasaamy	D26/85
6,238,065	B1	5/2001	Jones	362/339
6,280,052	B1	8/2001	White	362/225
6,419,375	B1	7/2002	Leadford et al.	362/297
D461,267	S	8/2002	Arumugasaamy	D26/85
6,454,442	B1	9/2002	Changaris	362/297
6,485,166	B1	11/2002	Fouke	362/340
D467,676	S	12/2002	Packer et al.	D26/72
D467,677	S	12/2002	Ries et al.	D26/88
6,505,953	B1	1/2003	Dahlen	362/217
6,505,959	B2	1/2003	Masaki et al.	362/339
6,530,681	B2	3/2003	Sieczkowski	362/404
6,537,649	B1	3/2003	Martin et al.	428/172
D472,665	S	4/2003	Herst et al.	D26/113
D472,666	S	4/2003	Herst et al.	D26/113
D472,667	S	4/2003	Herst et al.	D26/113
D472,668	S	4/2003	Herst et al.	D26/113
D473,007	S	4/2003	Herst et al.	D26/113
D473,335	S	4/2003	Bohard et al.	D26/113
6,540,382	B1	4/2003	Simon	362/339
D477,891	S	7/2003	Fritze et al.	D26/74
D480,168	S	9/2003	Herst et al.	D26/77
D480,172	S	9/2003	Herst et al.	D26/121
6,612,718	B1	9/2003	Packer et al.	362/267
6,612,723	B2	9/2003	Futhey et al.	362/339
D480,500	S	10/2003	Herst et al.	D26/121
D480,501	S	10/2003	Herst et al.	D26/121
D480,502	S	10/2003	Herst et al.	D26/121
D480,503	S	10/2003	Herst et al.	D26/121
D480,530	S	10/2003	Herst et al.	121/77
D480,830	S	10/2003	Sieczkowski	D26/118
D481,488	S	10/2003	Herst et al.	D26/121
D481,489	S	10/2003	Cline et al.	D26/128
6,637,912	B2	10/2003	Arumugasaamy et al.	362/327
D481,820	S	11/2003	Watt	D26/77
6,652,118	B2	11/2003	Shemitz et al.	362/225
D483,510	S	12/2003	Fritze et al.	D26/75
6,655,819	B2	12/2003	Loga et al.	362/263
D485,932	S	1/2004	Crane	D26/76
D487,527	S	3/2004	Sieczkowski	D26/76
6,709,131	B1	3/2004	Herst et al.	362/223
6,726,345	B2	4/2004	Arumugasaamy et al.	362/327
D496,121	S *	9/2004	Santoro	D26/74
2002/0080615	A1	6/2002	Marshall et al.	362/333

OTHER PUBLICATIONS

Lithonia Lighting, an Acuity Brands Company, Avante, Recessed Direct/Indirect Lighting, pp. 1-4 (1996).
Lithonia Lighting, an Acuity Brands Company, Avante, Direct/Indirect General Lighting System, pp. 1-2 (1995).
Lightolier, CFI Fluorescent, Alter Soft Lights, 1-8 (1996).
Alter, pp. 1-6 (1994).
Lithonia Lighting, an Acuity Brands Company, Product Selection Guide, 8th Edition, pp. 1-620 (2003).
Lithonia Lighting, an Acuity Brands Company, Avante Recessed Direct/Indirect Lighting, pp. 1-3 (1997).
Lithonia Lighting, an Acuity Brands Company, Architectural Fluorescent Recessed Direct/Indirect Lighting, pp. 1-13 (1999).
Genlyte/Thomas, Lightolier, Alter Soft Lights, pp. 1-67 (2003).
Cooper Lighting, Metalux, p. 1-8 (1999).
Columbia Lighting, Stratus, pp. 1-9, (1998).
Focal Point, Luna, pp. 1-5 (1997).
Lithonia Lighting, an Acuity Brands Company, Direct/Indirect Lighting, pp. 1-15 (2002).
Lithonia Lighting, an Acuity Brands Company, Product Selection Guide, 8th ed. p. 14-93, 112-115.

* cited by examiner

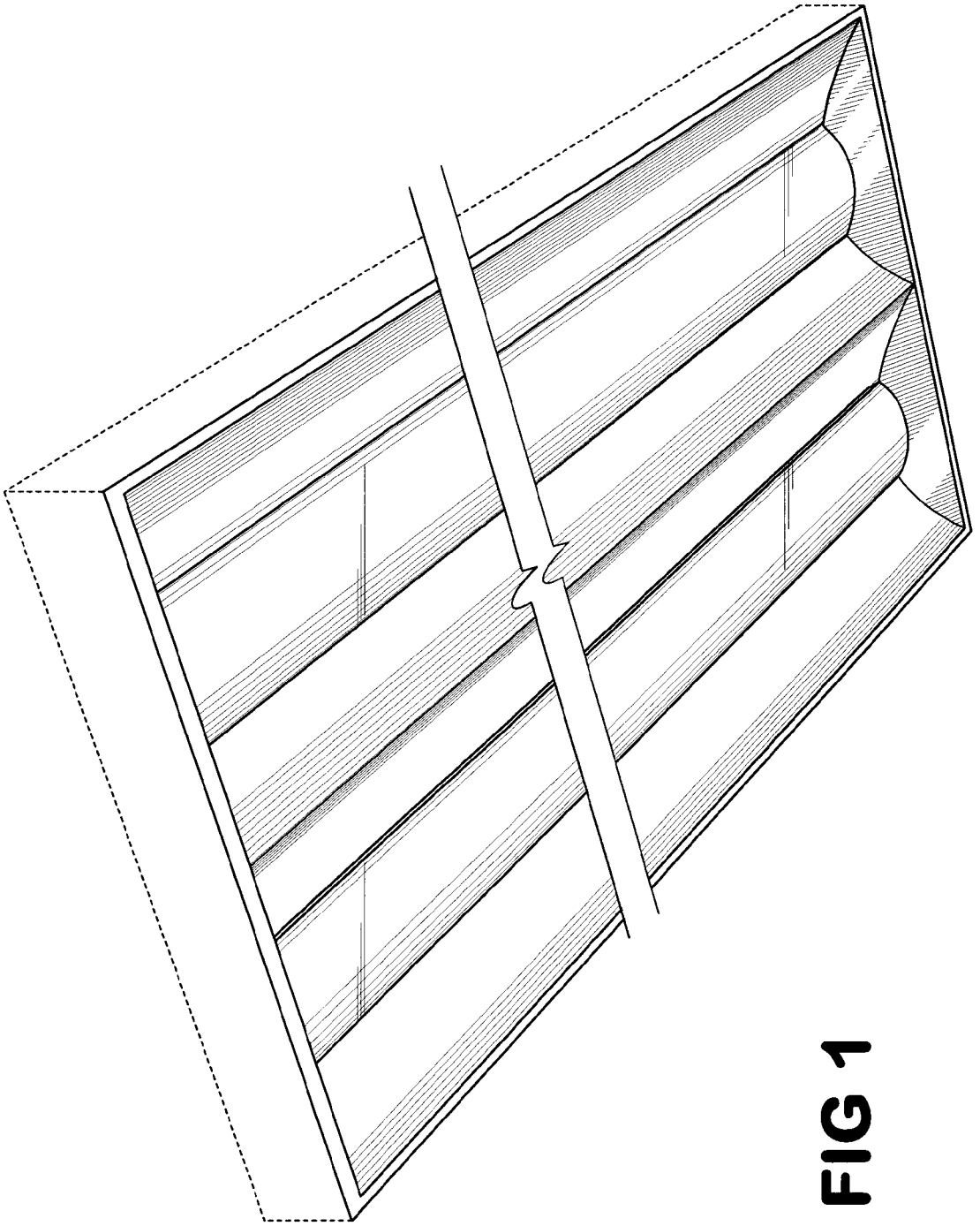

FIG 1

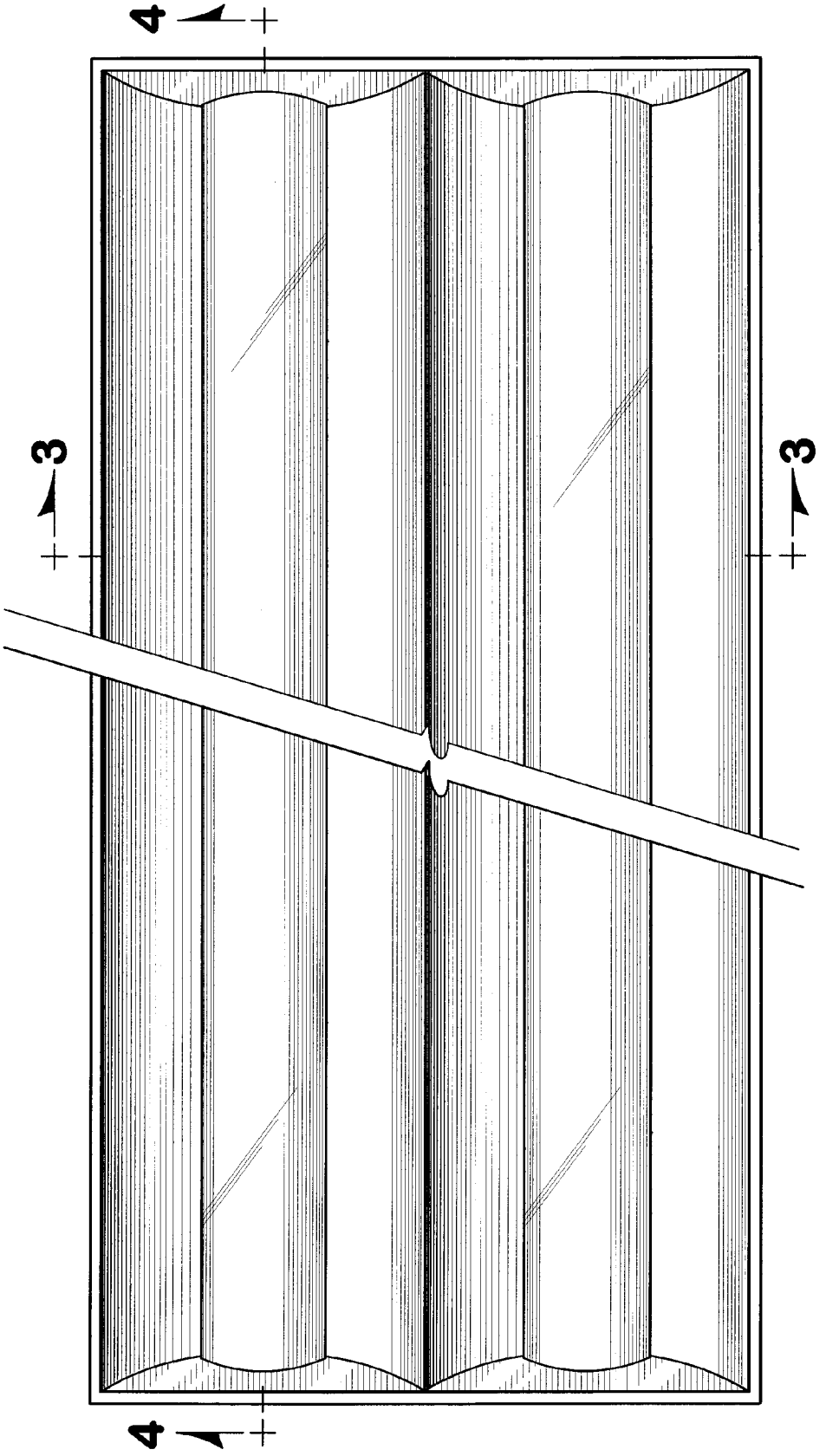

FIG 2

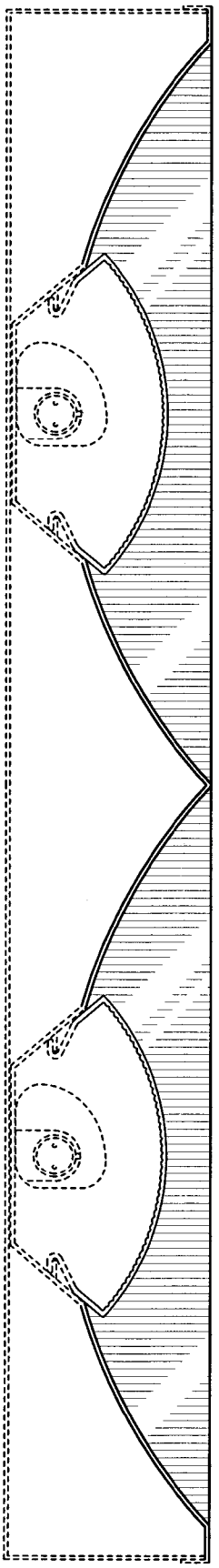

FIG 3

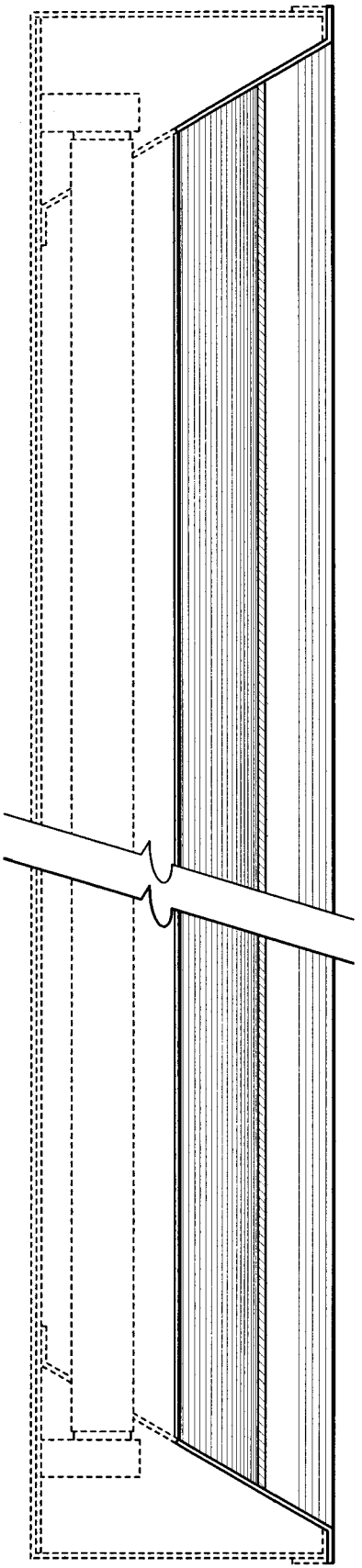

FIG 4

EXHIBIT F

US00D544993S

(12) United States Design Patent

Mayfield, III et al.

(10) Patent No.: US D544,993 S
(45) Date of Patent: ** Jun. 19, 2007

(54) **LIGHT FIXTURE HOUSING**

(75) Inventors: **John T. Mayfield, III**, Loganville, GA (US); **Kevin Leadford**, Evergreen, CO (US); **Stephen H. Lydecker**, Snellville, GA (US)

(73) Assignee: **Acuity Brands, Inc.**, Atlanta, GA (US)

(**) Term: **14 Years**

(21) Appl. No.: **29/215,570**

(22) Filed: **Oct. 21, 2004**

(51) **LOC (8) Cl.** **26-99**
(52) **U.S. Cl.** **D26/118**
(58) **Field of Classification Search** D26/118, D26/76, 75, 152, 138, 77, 121, 74, 142, 128, D26/113, 119, 120, 122; 362/223, 263, 225, 362/339, 404, 219, 217, 364, 291, 328, 257, 362/260, 317, 326, 330, 341
See application file for complete search history.

(56) **References Cited**

U.S. PATENT DOCUMENTS

D85,382	S	*	10/1931	Guth	D26/24
1,888,103	A	*	11/1932	Guth	362/348
D125,001	S	*	2/1941	Klingsick	D26/78
D132,296	S	*	5/1942	Hoeveler	D26/122
D132,786	S	*	6/1942	Netting	D26/78
2,323,073	A	*	6/1943	Netting	362/225
2,339,100	A	*	1/1944	Netting	362/219
D156,743	S	*	1/1950	Kennedy	D26/59
2,852,663	A		9/1958	Stuffer et al.	240/51.11
3,125,301	A	*	3/1964	Stotter	362/217
3,265,887	A		8/1966	Wince	
3,270,194	A	*	8/1966	Lee	362/218
3,838,268	A		9/1974	Fabbri	240/9
3,860,903	A	*	1/1975	Van Steenhoven	362/279
4,499,529	A	*	2/1985	Figueroa	362/283
D284,110	S	*	6/1986	Mullins	D26/76
4,622,624	A	*	11/1986	McCarthy et al.	362/217
4,698,734	A		10/1987	Ngai	362/225
4,799,136	A		1/1989	Molnar	362/300
D300,873	S	*	4/1989	Thompson et al.	D26/74

(Continued)

OTHER PUBLICATIONS

Lithonia Lighting, an Acuity Brands Company, Product Selection Guide, 8th ed. p. 14-93, 112-115.

(Continued)

Primary Examiner—Freda S. Nunn
Assistant Examiner—Kevin K. Rudzinski
(74) *Attorney, Agent, or Firm*—Needle & Rosenberg, P.C.

(57) **CLAIM**

The ornamental design for a light fixture housing, as shown and described.

DESCRIPTION

FIG. **1** is a perspective view of a light fixture housing of the present invention;

FIG. **2** is a bottom plan view of the light fixture housing of FIG. **1**;

FIG. **3** is a cross-sectional view of the light fixture housing of FIG. **1** taken along line **3-3** in FIG. **2**;

FIG. **4** is a cross-sectional view of the light fixture housing of FIG. **1** taken along line **4-4** in FIG. **2**;

FIG. **5** is a perspective view of a second embodiment of the light fixture housing of the present invention;

FIG. **6** is a bottom plan view of the light fixture housing of FIG. **5**;

FIG. **7** is a cross-sectional view of the light fixture housing of FIG. **5** taken along line **7-7** in FIG. **6**; and,

FIG. **8** is a cross-sectional view of the light fixture housing of FIG. **5** taken along line **8-8** in FIG. **6**.

The broken lines are shown for illustrative purposes only and form no part of the claimed design.

The top of the light fixture is unornamented and forms no part of the design.

1 Claim, 8 Drawing Sheets

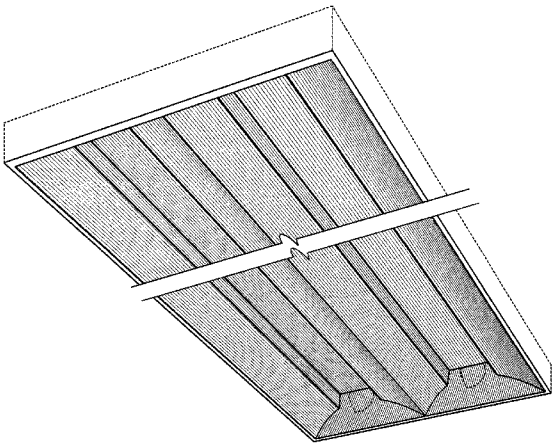

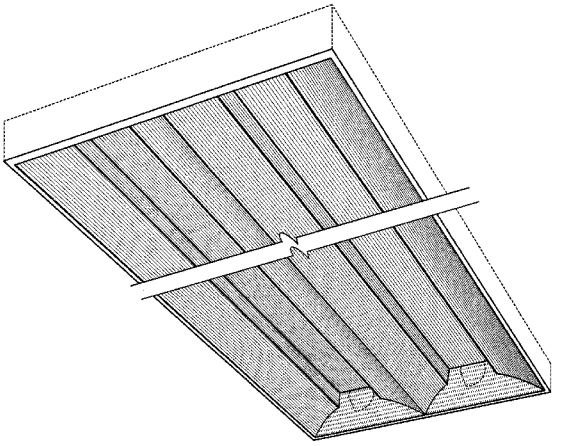

U.S. PATENT DOCUMENTS

5,062,030	A *	10/1991	Figueroa	362/346
5,192,129	A *	3/1993	Figueroa	362/346
D348,950	S *	7/1994	Herst et al.	D26/85
D351,481	S *	10/1994	Cole, Jr.	D26/76
5,555,162	A *	9/1996	Shemitz	362/225
5,570,947	A *	11/1996	Felland	362/148
5,746,502	A	5/1998	Huang	362/223
D397,819	S	9/1998	Thorton, Jr.	D26/77
D399,586	S *	10/1998	Ranieri et al.	D26/74
D407,473	S *	3/1999	Wimbock	D23/328
D411,641	S *	6/1999	Ranieri et al.	D26/74
D413,402	S *	8/1999	Ranieri et al.	D26/74
5,971,571	A	10/1999	Rose	362/346
5,988,829	A	11/1999	Holder	362/217
5,988,836	A	11/1999	Swarens	362/364
6,102,550	A	8/2000	Edwards, Jr.	362/221
D440,341	S	4/2001	Arumugasaamy	D26/85
6,238,065	B1	5/2001	Jones	362/339
6,280,052	B1	8/2001	White	362/225
6,419,375	B1	7/2002	Leadford et al.	362/297
D461,267	S	8/2002	Arumugasaamy	D26/85
6,454,442	B1	9/2002	Changaris	362/297
6,485,166	B1	11/2002	Fouke	362/340
D467,676	S	12/2002	Packer et al.	D26/72
D467,677	S	12/2002	Ries et al.	D26/88
6,505,953	B1	1/2003	Dahlen	362/217
6,505,959	B2	1/2003	Masaki et al.	362/339
6,530,681	B2	3/2003	Sieczkowski	362/404
6,537,649	B1	3/2003	Martin et al.	428/172
D472,665	S	4/2003	Herst et al.	D26/113
D472,666	S	4/2003	Herst et al.	D26/113
D472,667	S	4/2003	Herst et al.	D26/113
D472,668	S	4/2003	Herst et al.	D26/113
D473,007	S	4/2003	Herst et al.	D26/113
D473,335	S	4/2003	Bohard et al.	D26/113
6,540,382	B1	4/2003	Simon	362/339
D477,891	S	7/2003	Fritze et al.	D26/74
D480,168	S	9/2003	Herst et al.	D26/77
D480,172	S	9/2003	Herst et al.	D26/121
6,612,718	B1	9/2003	Packer et al.	362/267
6,612,723	B2	9/2003	Futhey et al.	362/339
D480,500	S	10/2003	Herst et al.	D26/121
D480,501	S	10/2003	Herst et al.	D26/121
D480,502	S	10/2003	Herst et al.	D26/121
D480,503	S	10/2003	Herst et al.	D26/121
D480,530	S	10/2003	Herst et al.	121/77
D480,830	S	10/2003	Sieczkowski	D26/118
D481,488	S	10/2003	Herst et al.	D26/121
D481,489	S	10/2003	Cline et al.	D26/128
6,637,912	B2	10/2003	Arumugasaamy et al.	362/327
D481,820	S	11/2003	Watt	D26/77
6,652,118	B2	11/2003	Shemitz et al.	362/225
D483,510	S	12/2003	Fritze et al.	D26/75
6,655,819	B2	12/2003	Loga et al.	362/263
D485,932	S	1/2004	Crane	D26/76
D487,527	S	3/2004	Sieczkowski	D26/76
6,709,131	B1	3/2004	Herst et al.	362/223
6,726,345	B2	4/2004	Arumugasaamy et al.	362/327
D496,121	S *	9/2004	Santoro	D26/74
2002/0080615	A1	6/2002	Marshall et al.	362/333

OTHER PUBLICATIONS

Lithonia Lighting, an Acuity Brands Company, Direct/Indirect Lighting, pp. 1-15 (2002).
Lithonia Lighting, an Acuity Brands Company, Avante Recessed Direct/Indirect Lighting, pp. 1-3 (1997).
Lithonia Lighting, an Acuity Brands Company, Architectural Fluorescent Recessed Direct/Indirect Lighting, pp. 1-13 (1999).
Genlyte/Thomas, Lightolier, Alter Soft Lights, pp. 1-67 (2003).
Cooper Lighting, Metalux, p. 1-8 (1999).
Columbia Lighting, Stratus, pp. 1-9, (1998).
Focal Point, Luna, pp. 1-5 (1997).
Lithonia Lighting, an Acuity Brands Company, Product Selection Guide, 8th Edition, pp. 1-620 (2003).
Peerless-Lighting, Parallels, pp. 1-2 (2005).
Lithonia Lighting, an Acuity Brands Company, Avante, Recessed Direct/Indirect Lighting, pp. 1-4 (1996).
Lithonia Lighting, an Acuity Brands Company, Avante, Direct/Indirect General Lighting System, pp. 1-2 (1995).
Lightolier, CFI Fluorescent, Alter Soft Lights, 1-8 (1996).
Alter, pp. 1-6 (1994).

* cited by examiner

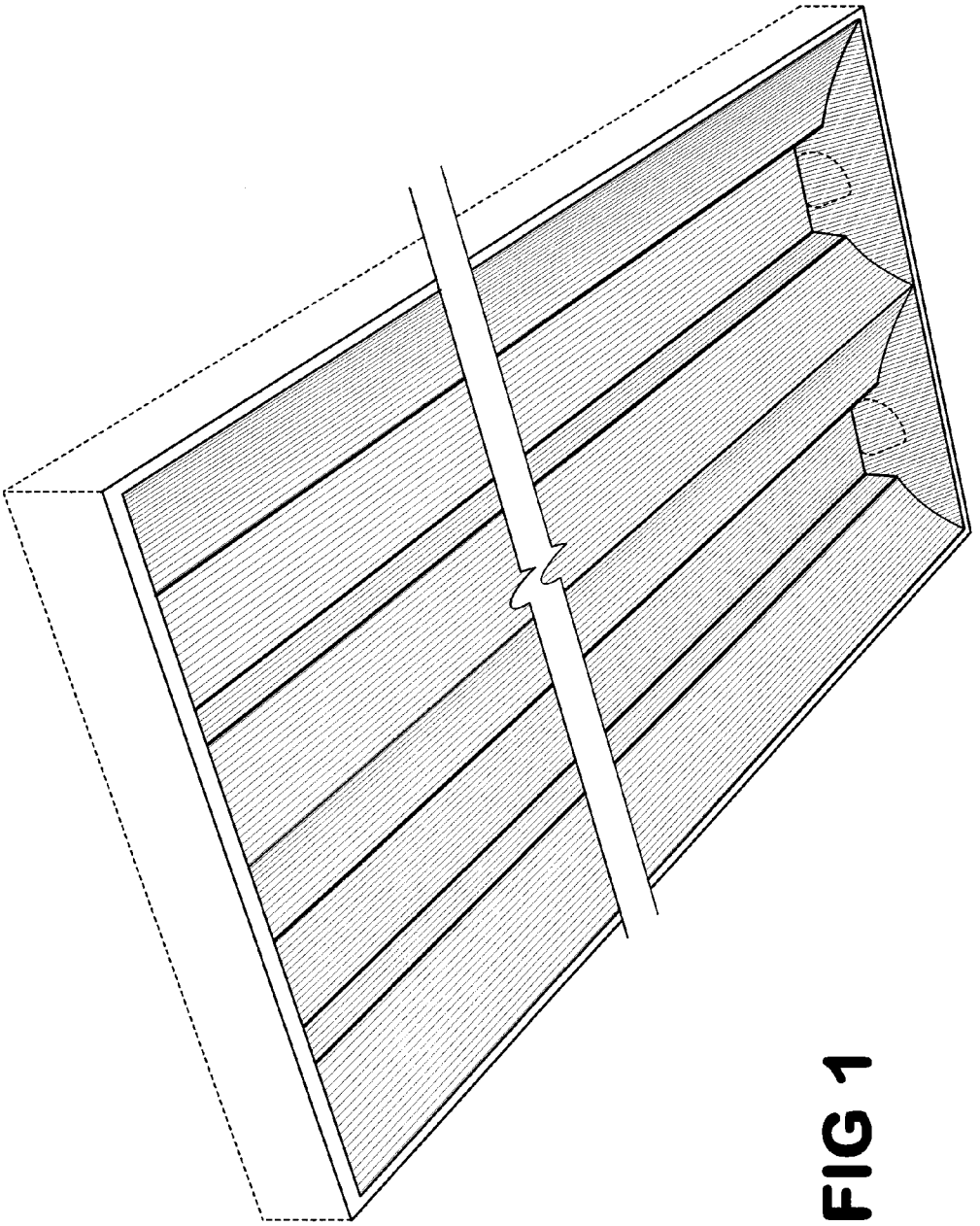

FIG 1

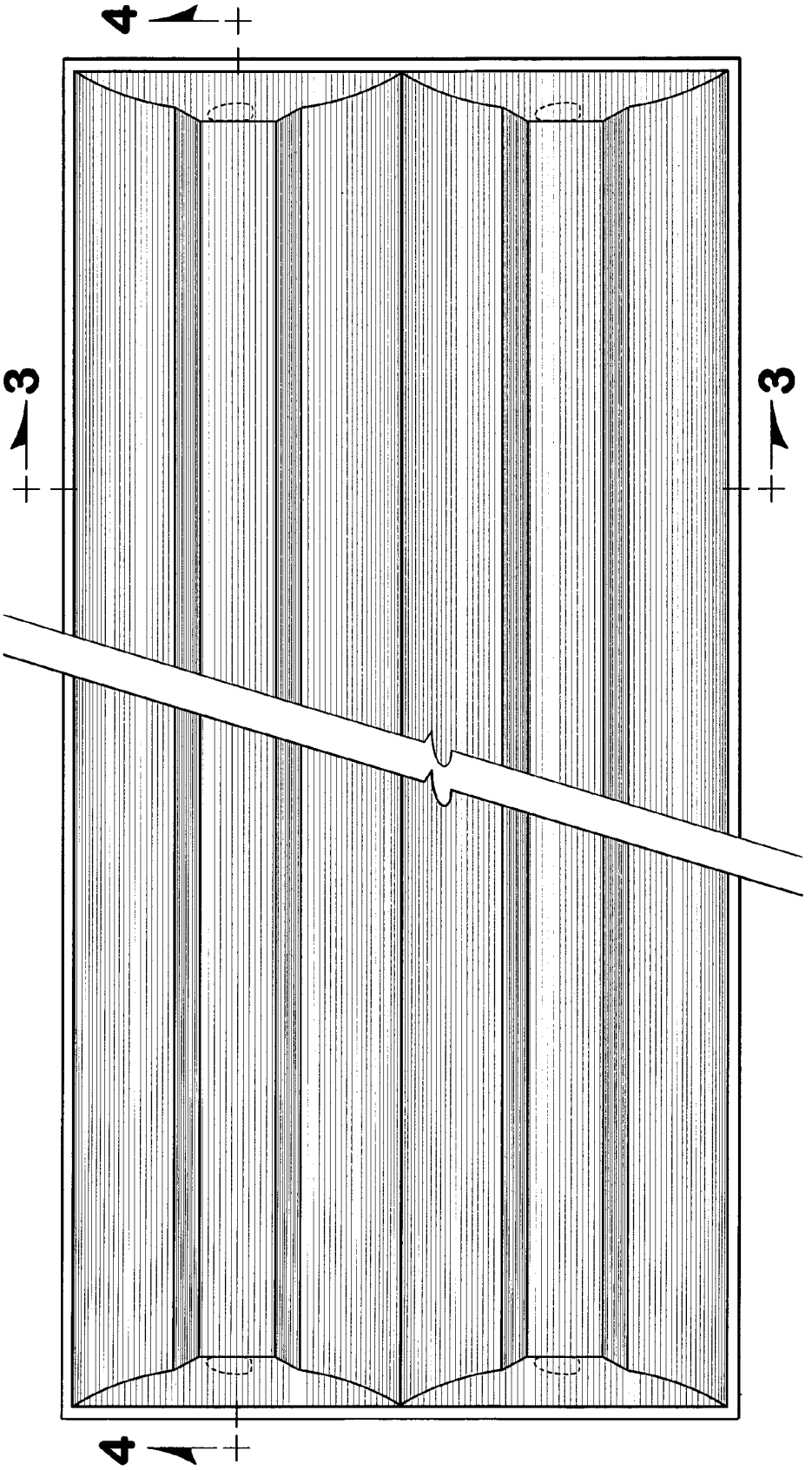

FIG 2

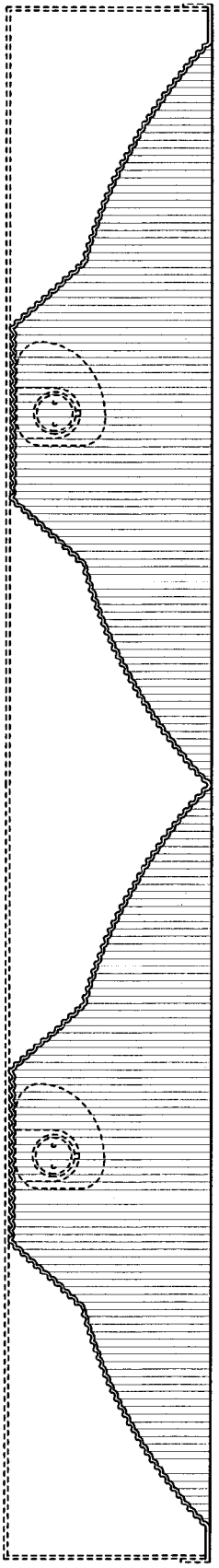

FIG 3

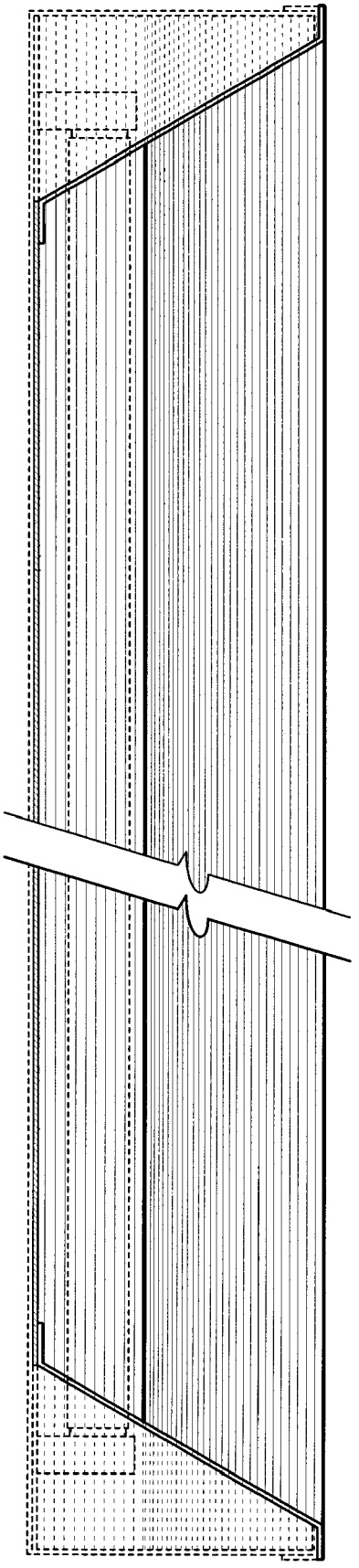

FIG 4

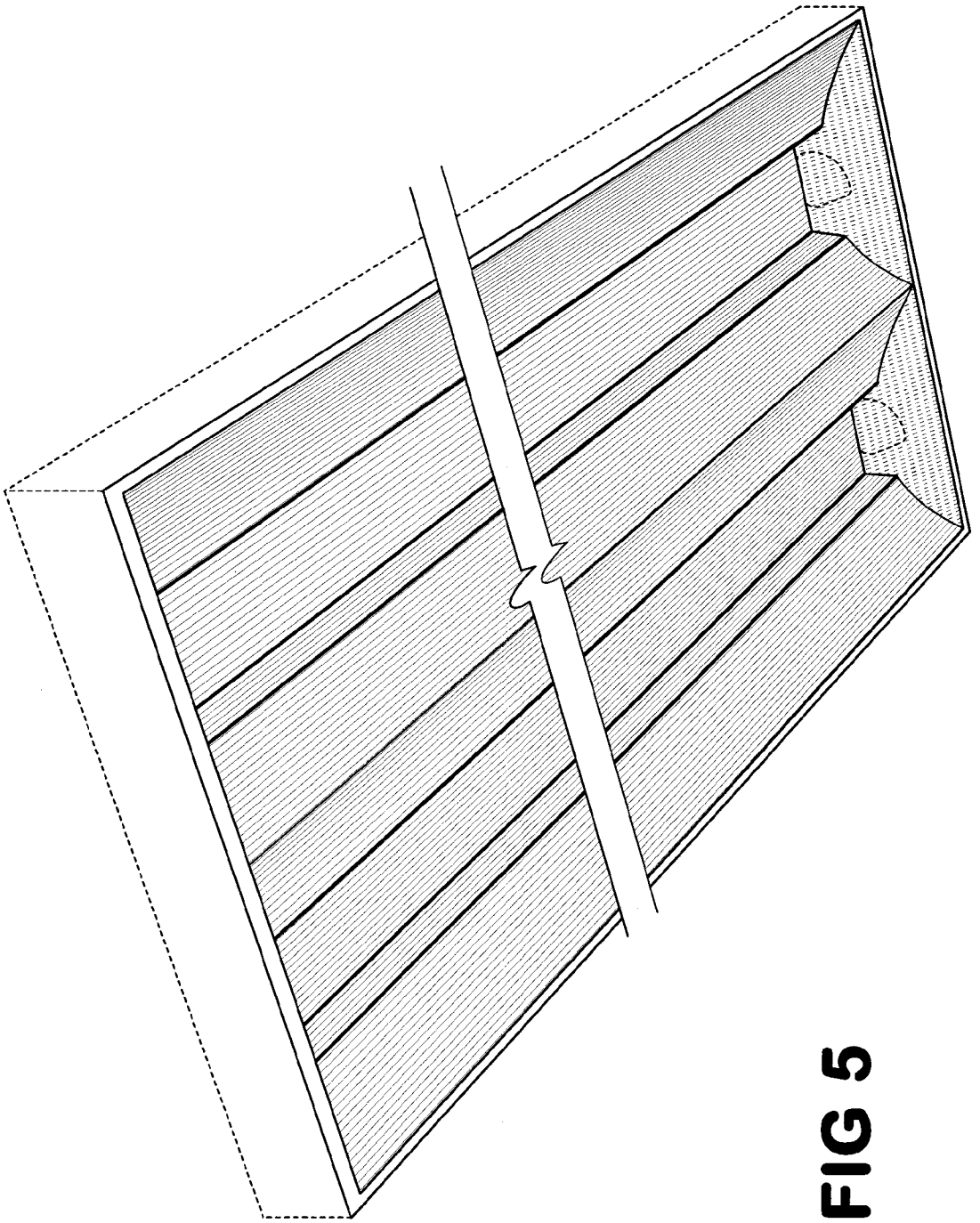

FIG 5

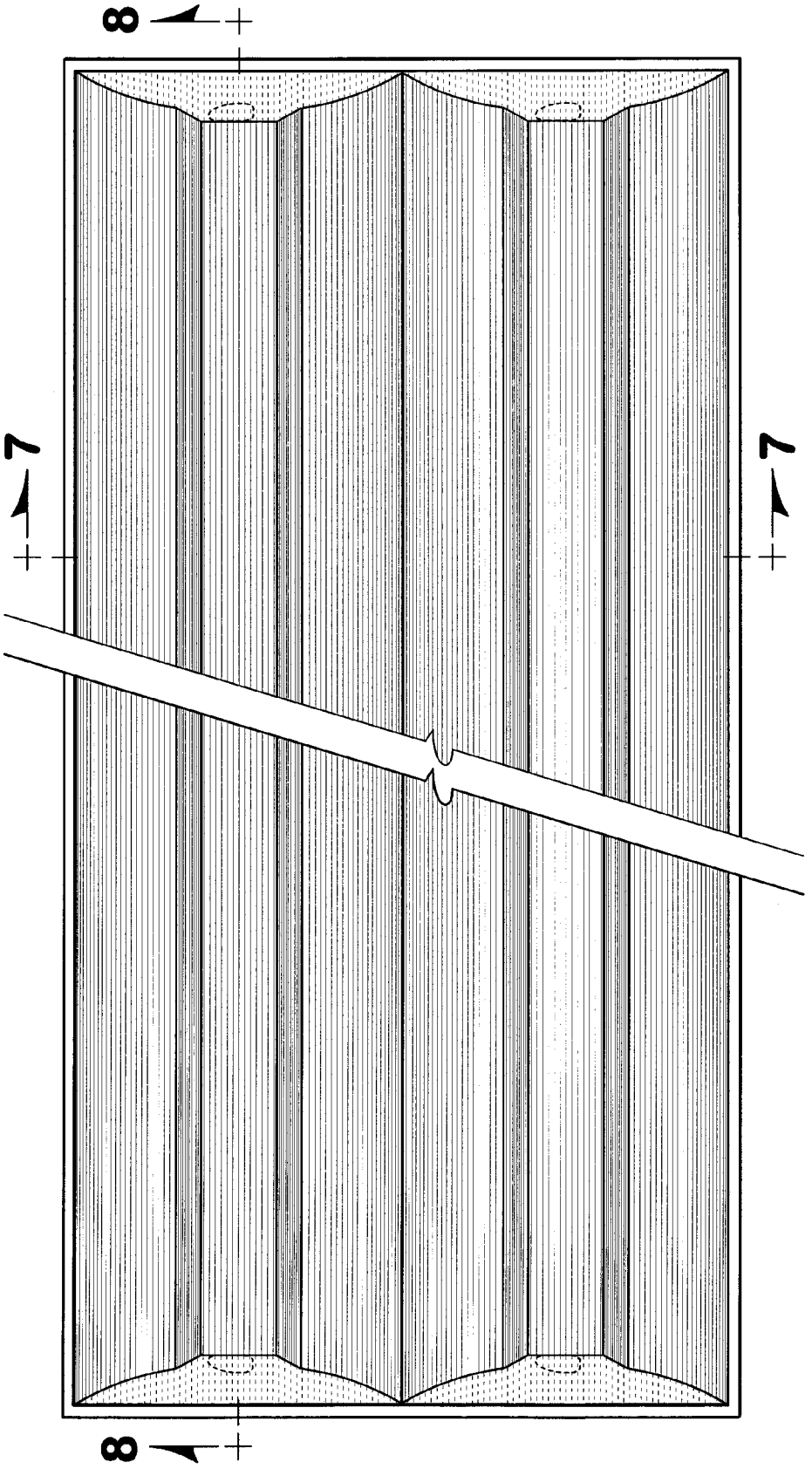

FIG 6

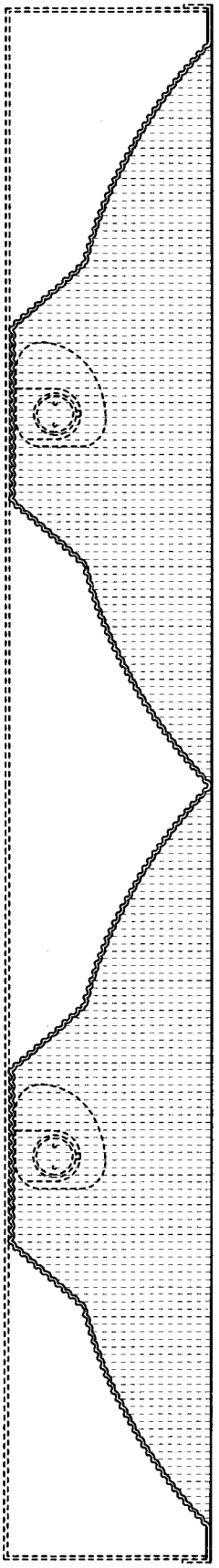

FIG 7

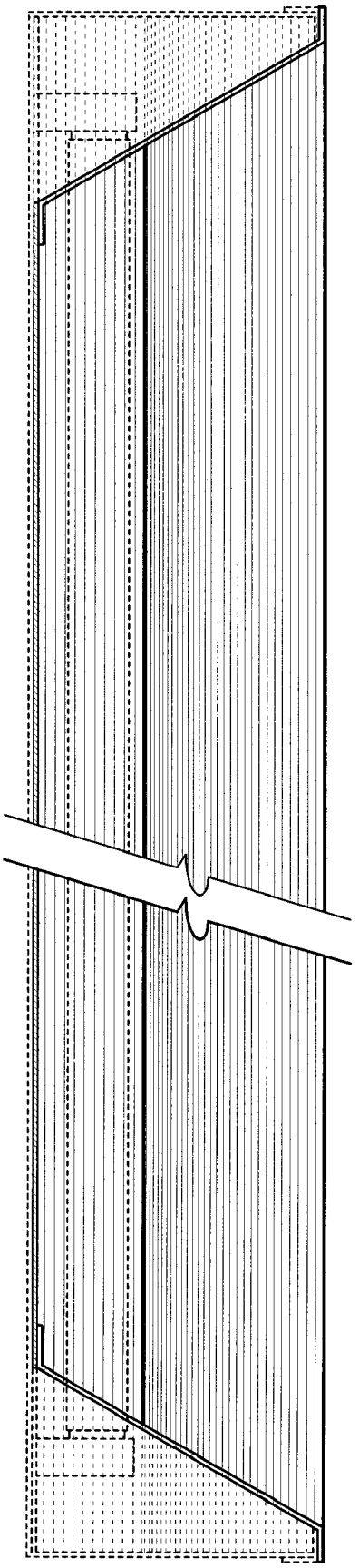

FIG 8

EXHIBIT G

US00D545481S

(12) United States Design Patent

Mayfield, III et al.

(10) Patent No.: US D545,481 S
(45) Date of Patent: ** Jun. 26, 2007

(54) **LIGHT FIXTURE**

(75) Inventors: **John T. Mayfield, III**, Loganville, GA (US); **Carl T. Gould**, Boulder, CO (US); **Kevin Leadford**, Evergreen, CO (US); **Stephen H. Lydecker**, Snellville, GA (US)

(73) Assignee: **Acuity Brands, Inc.**, Atlanta, GA (US)

(**) Term: **14 Years**

(21) Appl. No.: **29/215,572**

(22) Filed: **Oct. 21, 2004**

(51) **LOC (8) Cl.** **26-99**
(52) **U.S. Cl.** **D26/118**
(58) **Field of Classification Search** D26/118, D26/76, 75, 152, 138, 77, 121, 74, 142, 128, D26/113, 119, 120, 122; 362/223, 263, 225, 362/339, 404, 219, 217, 364, 291, 328, 257, 362/260, 317, 326, 330, 341
See application file for complete search history.

(56) **References Cited**

U.S. PATENT DOCUMENTS

D85,382	S	*	10/1931	Guth	D26/24
1,888,103	A	*	11/1932	Guth	362/348
D125,001	S	*	2/1941	Klingsick	D26/78
D132,296	S	*	5/1942	Hoeveler	D26/122
D132,786	S	*	6/1942	Netting	D26/78
2,323,073	A	*	6/1943	Netting	362/225
2,339,100	A	*	1/1944	Netting	362/219
D156,743	S	*	1/1950	Kennedy	D26/59
2,852,663	A		9/1958	Stuffer et al.	240/51.11
3,125,301	A	*	3/1964	Stotter	362/217
3,265,887	A		8/1966	Wince	
3,270,194	A	*	8/1966	Lee	362/218
3,838,268	A		9/1974	Fabbri	240/9
3,860,903	A	*	1/1975	Van Steenhoven	362/279
4,499,529	A	*	2/1985	Figueroa	362/283
D284,110	S	*	6/1986	Mullins	D26/76
4,622,624	A	*	11/1986	McCarthy et al.	362/217
4,698,734	A		10/1987	Ngai	362/225
4,799,136	A		1/1989	Molnar	362/300
D300,873	S	*	4/1989	Thompson et al.	D26/74
5,062,030	A	*	10/1991	Figueroa	362/346
5,192,129	A	*	3/1993	Figueroa	362/346

(Continued)

OTHER PUBLICATIONS

Peerless-Lighting, Parallels, pp. 1-2 (2005).

(Continued)

Primary Examiner—Freda S. Nunn
Assistant Examiner—Kevin K. Rudzinski
(74) *Attorney, Agent, or Firm*—Needle & Rosenberg, P.C.

(57) **CLAIM**

The ornamental design for a light fixture, as shown and described.

DESCRIPTION

FIG. **1** is a perspective view of a light fixture of the present invention;

FIG. **2** is a bottom plan view of the light fixture of FIG. **1**;

FIG. **3** is a cross-sectional view of the light fixture of FIG. **1** taken along the line **3-3** in FIG. **2**; and,

FIG. **4** is a cross-sectional view of the light fixture of FIG. **1** taken along the line **4-4** in FIG. **2**.

FIGS. **1**, **2** and **4** are broken away to indicate indeterminate length. The broken lines are shown in FIGS. **1**, **3**, and **4** for illustrative purposes only and form no part of the claimed design. The top of the light fixture is unornamented and forms no part of the design.

1 Claim, 3 Drawing Sheets

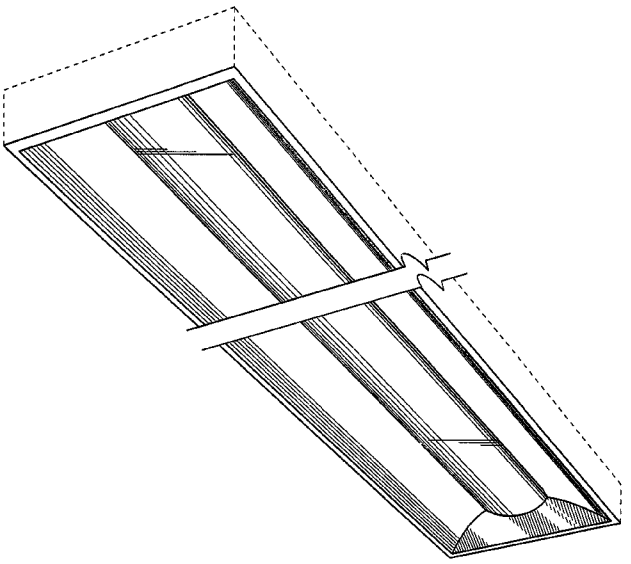

U.S. PATENT DOCUMENTS

D348,950	S *	7/1994	Herst et al.	D26/85
D351,481	S *	10/1994	Cole, Jr.	D26/76
5,555,162	A *	9/1996	Shemitz	362/225
5,570,947	A *	11/1996	Felland	362/148
5,746,502	A	5/1998	Huang	362/223
D397,819	S	9/1998	Thorton, Jr.	D26/77
D399,586	S *	10/1998	Ranieri et al.	D26/74
D407,473	S *	3/1999	Wimbock	D23/328
D411,641	S *	6/1999	Ranieri et al.	D26/74
D413,402	S *	8/1999	Ranieri et al.	D26/74
5,971,571	A	10/1999	Rose	362/346
5,988,829	A	11/1999	Holder	362/217
5,988,836	A	11/1999	Swarens	362/364
6,102,550	A	8/2000	Edwards, Jr.	362/221
D440,341	S	4/2001	Arumugasaamy	D26/85
6,238,065	B1	5/2001	Jones	362/339
6,280,052	B1	8/2001	White	362/225
6,419,375	B1	7/2002	Leadford et al.	362/297
D461,267	S	8/2002	Arumugasaamy	D26/85
6,454,442	B1	9/2002	Changaris	362/297
6,485,166	B1	11/2002	Fouke	362/340
D467,676	S	12/2002	Packer et al.	D26/72
D467,677	S	12/2002	Ries et al.	D26/88
6,505,953	B1	1/2003	Dahlen	362/217
6,505,959	B2	1/2003	Masaki et al.	362/339
6,530,681	B2	3/2003	Sieczkowski	362/404
6,537,649	B1	3/2003	Martin et al.	428/172
D472,665	S	4/2003	Herst et al.	D26/113
D472,666	S	4/2003	Herst et al.	D26/113
D472,667	S	4/2003	Herst et al.	D26/113
D472,668	S	4/2003	Herst et al.	D26/113
D473,007	S	4/2003	Herst et al.	D26/113
D473,335	S	4/2003	Brohard et al.	D26/113
6,540,382	B1	4/2003	Simon	362/339
D477,891	S	7/2003	Fritze et al.	D26/74
D480,168	S	9/2003	Herst et al.	D26/77
D480,172	S	9/2003	Herst et al.	D26/121
6,612,718	B1	9/2003	Packer et al.	362/267
6,612,723	B2	9/2003	Futhey et al.	362/339
D480,500	S	10/2003	Herst et al.	D26/121
D480,501	S	10/2003	Herst et al.	D26/121
D480,502	S	10/2003	Herst et al.	D26/121
D480,503	S	10/2003	Herst et al.	D26/121
D480,530	S	10/2003	Herst et al.	121/77
D480,830	S	10/2003	Sieczkowski	D26/118
D481,488	S	10/2003	Herst et al.	D26/121
D481,489	S	10/2003	Cline et al.	D26/128
6,637,912	B2	10/2003	Arumugasaamy et al.	362/327
D481,820	S	11/2003	Watt	D26/77
6,652,118	B2	11/2003	Shemitz et al.	362/225
D483,510	S	12/2003	Fritze et al.	D26/75
6,655,819	B2	12/2003	Loga et al.	362/263
D485,932	S	1/2004	Crane	D26/76
D487,527	S	3/2004	Sieczkowski	D26/76
6,709,131	B1	3/2004	Herst et al.	362/223
6,726,345	B2	4/2004	Arumugusaamy et al.	362/327
D496,121	S *	9/2004	Santoro	D26/74
2002/0080615	A1	6/2002	Marshall et al.	362/333

OTHER PUBLICATIONS

Lithonia Lighting, an Acuity Brands Company, Avante, Recessed Direct/Indirect Lighting, pp. 1-4 (1996).
Lithonia Lighting, an Acuity Brands Company, Avante, Direct/Indirect General Lighting System, pp. 1-2 (1995).
Lightolier, CFI Fluorescent, Alter Soft Lights, 1-8 (1996).
Alter, pp. 1-6 (1994).
Lithonia Lighting, an Acuity Brands Company, Product Selection Guide, 8th Edition, pp. 1-620 (2003).
Lithonia Lighting, an Acuity Brands Company, Avante Recessed Direct/Indirect Lighting, pp. 1-3 (1997).
Lithonia Lighting, an Acuity Brands Company, Architectural Fluorescent Recessed Direct/Indirect Lighting, pp. 1-13 (1999).
Genlyte/Thomas, Lightolier, Alter Soft Lights, pp. 1-67 (2003).
Cooper Lighting, Metalux, p. 1-8 (1999).
Columbia Lighting, Stratus, pp. 1-9, (1998).
Focal Point, Luna, pp. 1-5 (1997).
Lithonia Lighting, an Acuity Brands Company, Direct/Indirect Lighting, pp. 1-15 (2002).
Lithonia Lighting, an Acuity Brands Company, Product Selection Guide, 8th ed. p. 14-93, 112-115.

* cited by examiner

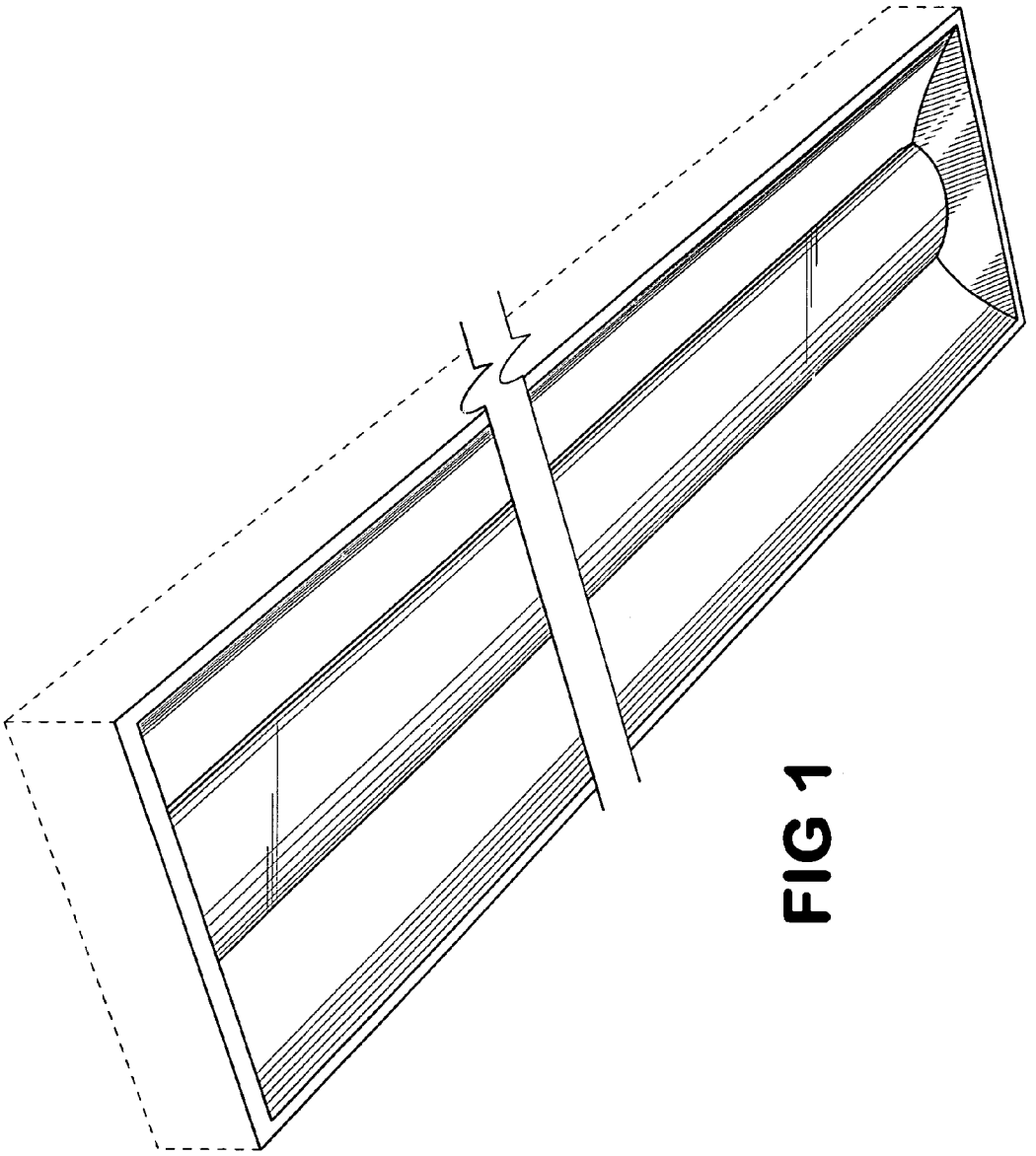

FIG 1

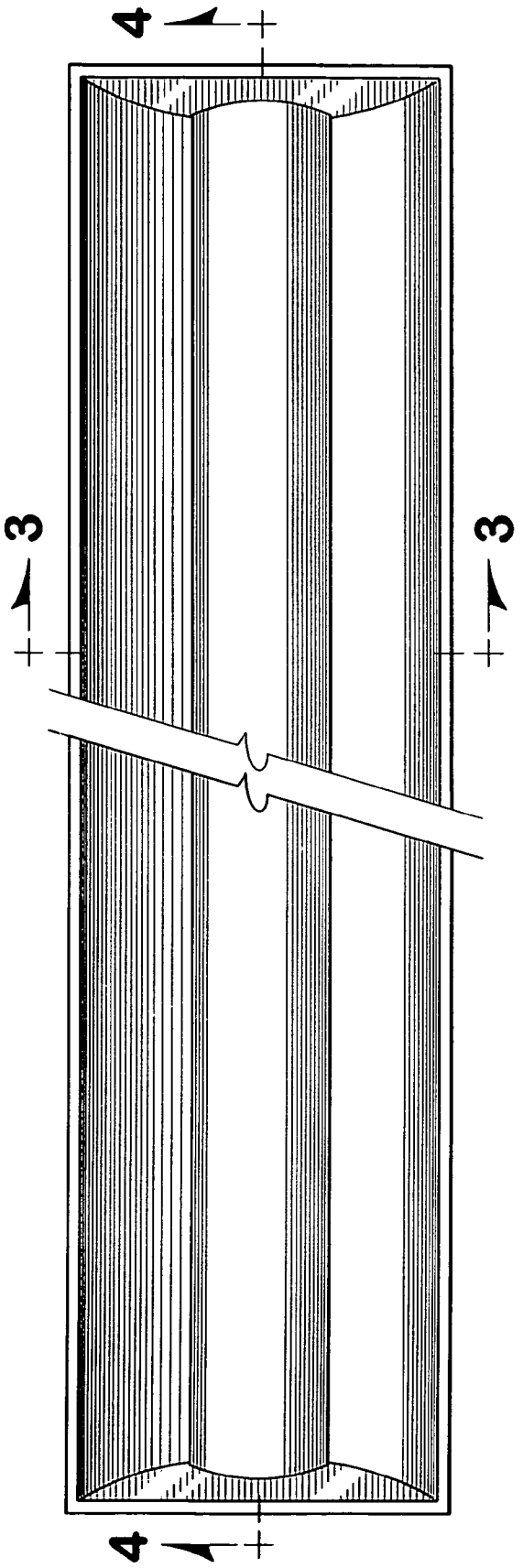

FIG 2

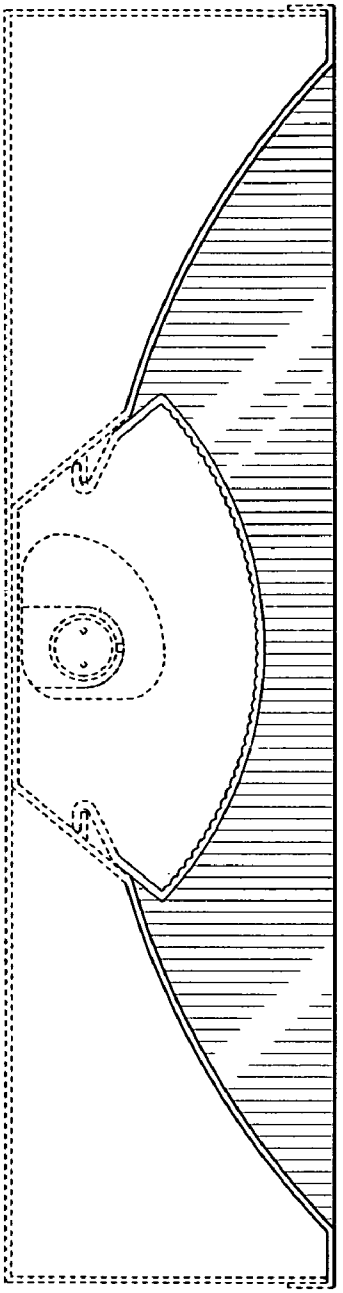

FIG 3

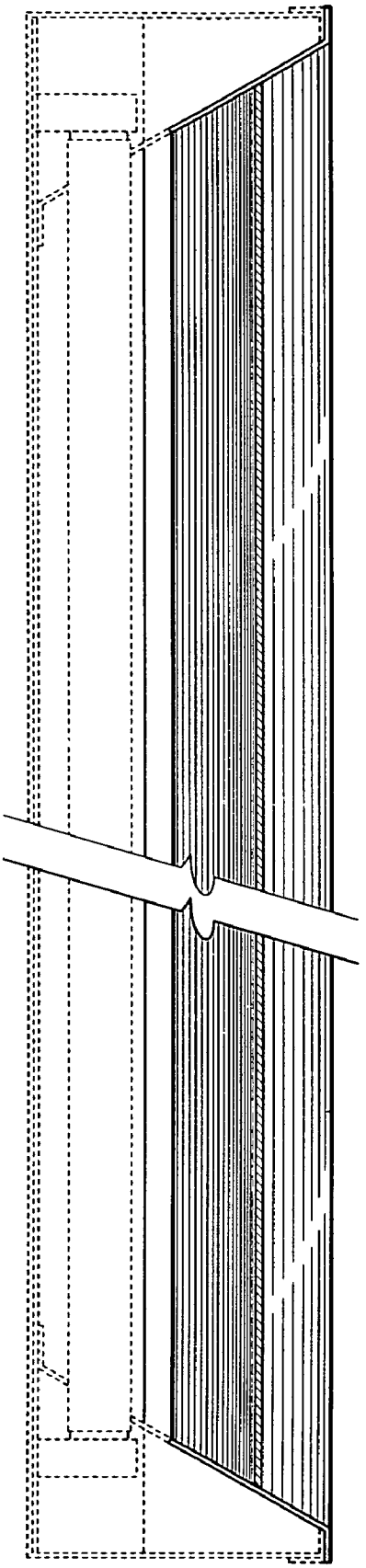

FIG 4

EXHIBIT H

US00D545482S

(12) United States Design Patent

Mayfield, III et al.

(10) Patent No.: US D545,482 S
(45) Date of Patent: ** Jun. 26, 2007

(54) **LIGHT FIXTURE**

(75) Inventors: **John T. Mayfield, III**, Loganville, GA (US); **Carl T. Gould**, Boulder, CO (US); **Kevin Leadford**, Evergreen, CO (US); **Stephen H. Lydecker**, Snellville, GA (US)

(73) Assignee: **Acuity Brands, Inc.**, Atlanta, GA (US)

(**) Term: **14 Years**

(21) Appl. No.: **29/215,577**

(22) Filed: **Oct. 21, 2004**

(51) **LOC (8) Cl.** **26-99**
(52) **U.S. Cl.** **D26/118**
(58) **Field of Classification Search** D26/118, D26/76, 75, 152, 138, 77, 121, 74, 142, 128, D26/113, 119, 120, 122; 362/223, 263, 225, 362/339, 404, 219, 217, 364, 291, 328, 257, 362/260, 317, 326, 330, 341
See application file for complete search history.

(56) **References Cited**

U.S. PATENT DOCUMENTS

D85,382	S	*	10/1931	Guth	D26/24
1,888,103	A	*	11/1932	Guth	362/348
D125,001	S	*	2/1941	Klingsick	D26/78
D132,296	S	*	5/1942	Hoeveler	D26/122
D132,786	S	*	6/1942	Netting	D26/78
2,323,073	A	*	6/1943	Netting	362/225
2,339,100	A	*	1/1944	Netting	362/219
D156,743	S	*	1/1950	Kennedy	D26/59
2,852,663	A		9/1958	Stuffer et al.	240/51.11
3,125,301	A	*	3/1964	Stotter	362/217
3,265,887	A		8/1966	Wince	
3,270,194	A	*	8/1966	Lee	362/218
3,838,268	A		9/1974	Fabbri	240/9
3,860,903	A	*	1/1975	Van Steenhoven	362/279
4,499,529	A	*	2/1985	Figueroa	362/283
D284,110	S	*	6/1986	Mullins	D26/76
4,622,624	A	*	11/1986	McCarthy et al.	362/217
4,698,734	A		10/1987	Ngai	362/225
4,799,136	A		1/1989	Molnar	362/300
D300,873	S	*	4/1989	Thompson et al.	D26/74
5,062,030	A	*	10/1991	Figueroa	362/346
5,192,129	A	*	3/1993	Figueroa	362/346

(Continued)

OTHER PUBLICATIONS

Peerless-Lighting, Parallels, pp. 1-2 (2005).

(Continued)

Primary Examiner—Freda S. Nunn
Assistant Examiner—Kevin K. Rudzinski
(74) *Attorney, Agent, or Firm*—Needle & Rosenberg, P.C.

(57) **CLAIM**

The ornamental design for a light fixture, as shown and described.

DESCRIPTION

FIG. **1** is a perspective view of a light fixture of the present invention;

FIG. **2** is a bottom plan view of the light fixture of FIG. **1**;

FIG. **3** is a cross-sectional view of the light fixture of FIG. **1** taken along the line **3-3** in FIG. **2**; and,

FIG. **4** is a cross-sectional view of the light fixture of FIG. **1** taken along the line **4-4** in FIG. **2**.

FIGS. **1**, **2** and **4** are broken away to indicate indeterminate length. The broken lines are shown in FIGS. **1**, **3**, and **4** for illustrative purposes only and form no part of the claimed design. The top of the light fixture is unornamented and forms no part of the design.

1 Claim, 3 Drawing Sheets

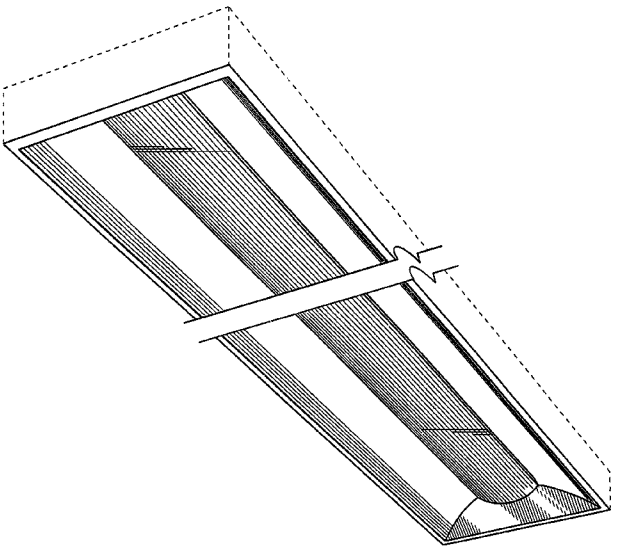

U.S. PATENT DOCUMENTS

D348,950	S *	7/1994	Herst et al.	D26/85
D351,481	S *	10/1994	Cole, Jr.	D26/76
5,555,162	A *	9/1996	Shemitz	362/225
5,570,947	A *	11/1996	Felland	362/148
5,746,502	A	5/1998	Huang	362/223
D397,819	S	9/1998	Thorton, Jr.	D26/77
D399,586	S *	10/1998	Ranieri et al.	D26/74
D407,473	S *	3/1999	Wimbock	D23/328
D411,641	S *	6/1999	Ranieri et al.	D26/74
D413,402	S *	8/1999	Ranieri et al.	D26/74
5,971,571	A	10/1999	Rose	362/346
5,988,829	A	11/1999	Holder	362/217
5,988,836	A	11/1999	Swarens	362/364
6,102,550	A	8/2000	Edwards, Jr.	362/221
D440,341	S	4/2001	Arumugasaamy	D26/85
6,238,065	B1	5/2001	Jones	362/339
6,280,052	B1	8/2001	White	362/225
6,419,375	B1	7/2002	Leadford et al.	362/297
D461,267	S	8/2002	Arumugasaamy	D26/85
6,454,442	B1	9/2002	Changaris	362/297
6,485,166	B1	11/2002	Fouke	362/340
D467,676	S	12/2002	Packer et al.	D26/72
D467,677	S	12/2002	Ries et al.	D26/88
6,505,953	B1	1/2003	Dahlen	362/217
6,505,959	B2	1/2003	Masaki et al.	362/339
6,530,681	B2	3/2003	Sieczkowski	362/404
6,537,649	B1	3/2003	Martin et al.	428/172
D472,665	S	4/2003	Herst et al.	D26/113
D472,666	S	4/2003	Herst et al.	D26/113
D472,667	S	4/2003	Herst et al.	D26/113
D472,668	S	4/2003	Herst et al.	D26/113
D473,007	S	4/2003	Herst et al.	D26/113
D473,335	S	4/2003	Brohard et al.	D26/113
6,540,382	B1	4/2003	Simon	362/339
D477,891	S	7/2003	Fritze et al.	D26/74
D480,168	S	9/2003	Herst et al.	D26/77
D480,172	S	9/2003	Herst et al.	D26/121
6,612,718	B1	9/2003	Packer et al.	362/267
6,612,723	B2	9/2003	Futhey et al.	362/339
D480,500	S	10/2003	Herst et al.	D26/121
D480,501	S	10/2003	Herst et al.	D26/121
D480,502	S	10/2003	Herst et al.	D26/121
D480,503	S	10/2003	Herst et al.	D26/121
D480,530	S	10/2003	Herst et al.	121/77
D480,830	S	10/2003	Sieczkowski	D26/118
D481,488	S	10/2003	Herst et al.	D26/121
D481,489	S	10/2003	Cline et al.	D26/128
6,637,912	B2	10/2003	Arumugasaamy et al.	362/327
D481,820	S	11/2003	Watt	D26/77
6,652,118	B2	11/2003	Shemitz et al.	362/225
D483,510	S	12/2003	Fritze et al.	D26/75
6,655,819	B2	12/2003	Loga et al.	362/263
D485,932	S	1/2004	Crane	D26/76
D487,527	S	3/2004	Sieczkowski	D26/76
6,709,131	B1	3/2004	Herst et al.	362/223
6,726,345	B2	4/2004	Arumugasaamy et al.	362/327
D496,121	S *	9/2004	Santoro	D26/74
2002/0080615	A1	6/2002	Marshall et al.	362/333

OTHER PUBLICATIONS

Lithonia Lighting, an Acuity Brands Company, Avante, Recessed Direct/Indirect Lighting, pp. 1-4 (1996).
Lithonia Lighting, an Acuity Brands Company, Avante, Direct/Indirect General Lighting System, pp. 1-2 (1995).
Lightolier, CFI Fluorescent, Alter Soft Lights, 1-8 (1996).
Alter, pp. 1-6 (1994).
Lithonia Lighting, an Acuity Brands Company, Product Selection Guide, 8th Edition, pp. 1-620 (2003).
Lithonia Lighting, an Acuity Brands Company, Avante Recessed Direct/Indirect Lighting, pp. 1-3 (1997).
Lithonia Lighting, an Acuity Brands Company, Architectural Fluorescent Recessed Direct/Indirect Lighting, pp. 1-13 (1999).
Genlyte/Thomas, Lightolier, Alter Soft Lights, pp. 1-67 (2003).
Cooper Lighting, Melalux, p. 1-8 (1999).
Columbia Lighting, Stratus, pp. 1-9, (1998).
Focal Point, Luna, pp. 1-5 (1997).
Lithonia Lighting, an Acuity Brands Company, Direct/Indirect Lighting, pp. 1-15 (2002).
Lithonia Lighting, an Acuity Brands Company, Product Selection Guide, 8th ed. p. 14-93, 112-115.

* cited by examiner

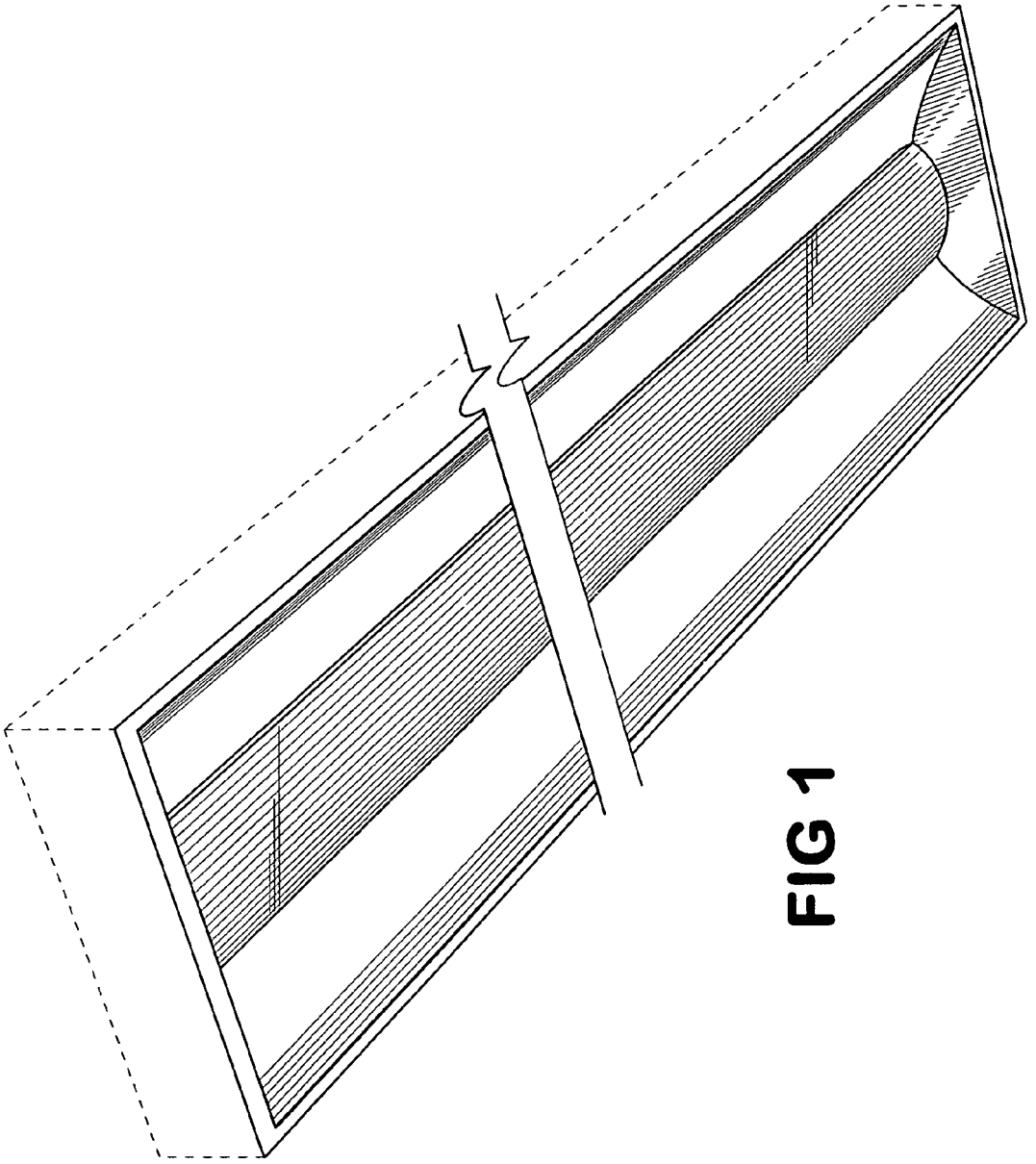

FIG 1

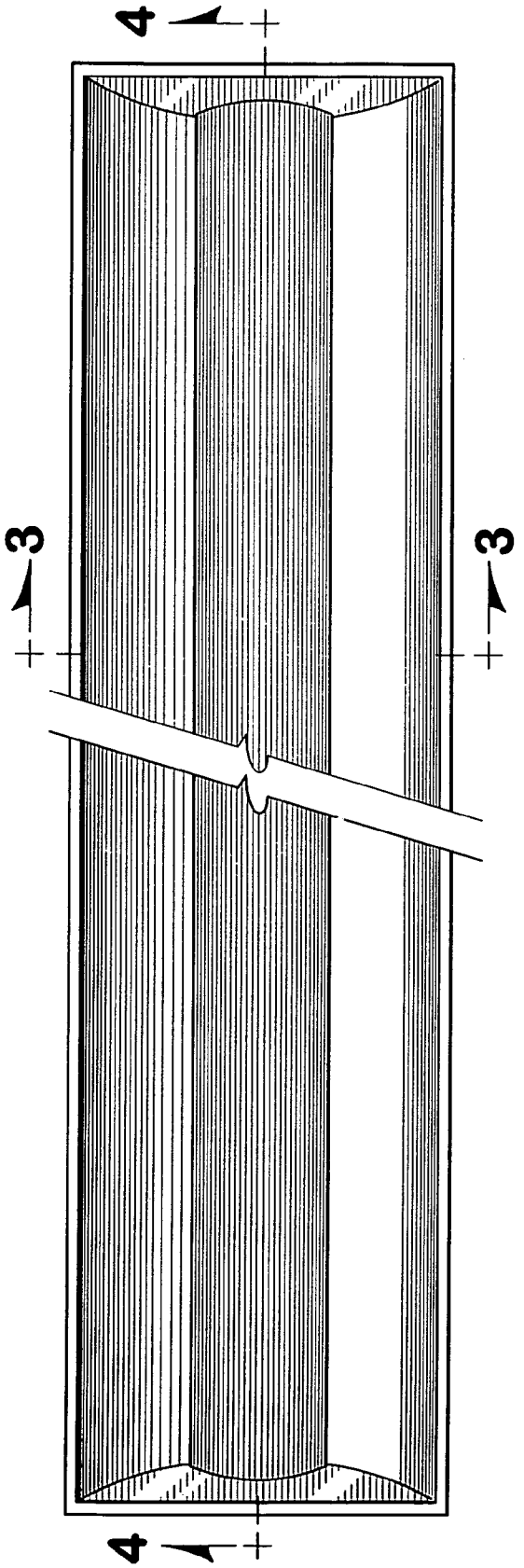

FIG 2

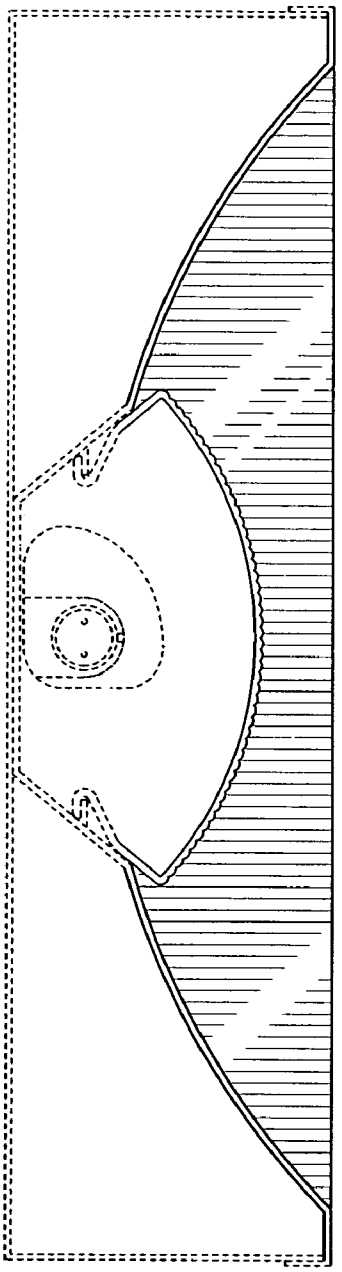

FIG 3

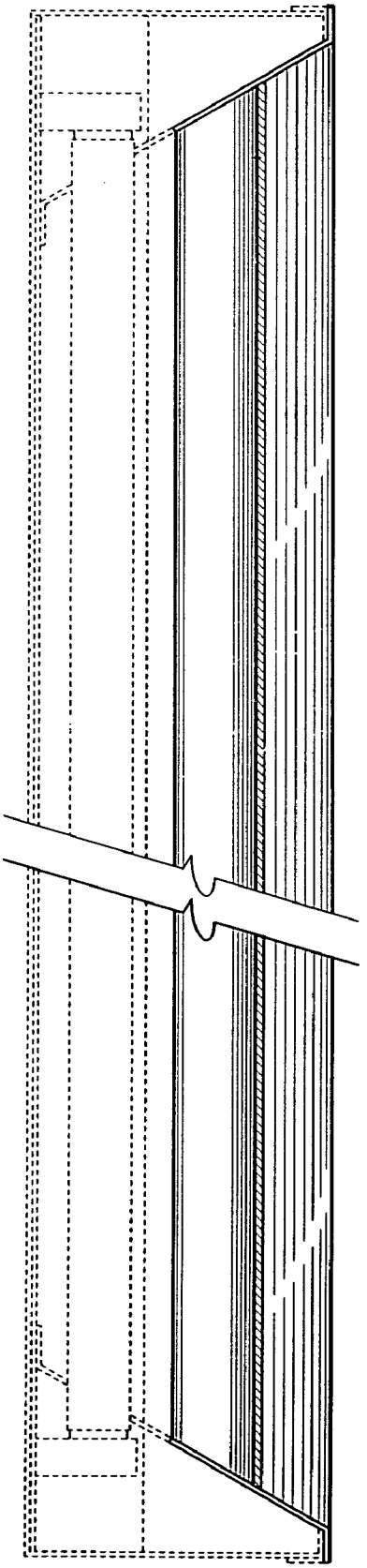

FIG 4

EXHIBIT I

US00D545483S

(12) United States Design Patent

Mayfield, III et al.

(10) Patent No.: US D545,483 S
(45) Date of Patent: ** Jun. 26, 2007

(54) **LIGHT FIXTURE**

(75) Inventors: **John T. Mayfield, III**, Loganville, GA (US); **Carl T. Gould**, Boulder, CO (US); **Kevin Leadford**, Evergreen, CO (US); **Stephen H. Lydecker**, Snellville, GA (US)

(73) Assignee: **Acuity Brands, Inc.**, Atlanta, GA (US)

(**) Term: **14 Years**

(21) Appl. No.: **29/215,618**

(22) Filed: **Oct. 21, 2004**

(51) **LOC (8) Cl.** **26-99**
(52) **U.S. Cl.** **D26/118**
(58) **Field of Classification Search** D26/118, D26/76, 75, 152, 138, 77, 121, 74, 142, 128, D26/113, 119, 120, 122; 362/223, 263, 225, 362/339, 404, 219, 217, 364, 291, 328, 257, 362/260, 317, 326, 330, 341
See application file for complete search history.

(56) **References Cited**

U.S. PATENT DOCUMENTS

D85,382 S * 10/1931 Guth D26/24
1,888,103 A * 11/1932 Guth 362/348

(Continued)

OTHER PUBLICATIONS

Peerless-Lighting, Parallels, pp. 1-2 (2005).

(Continued)

Primary Examiner—Freda S. Nunn
Assistant Examiner—Kevin K. Rudzinski

(74) *Attorney, Agent, or Firm*—Needle & Rosenberg, PC.

(57) **CLAIM**

The ornamental design for a light fixture, as shown and described.

DESCRIPTION

FIG. **1** is a perspective view of a light fixture of the present invention;

FIG. **2** is a bottom plan view of the light fixture of FIG. **1**;

FIG. **3** is a cross-sectional view of the light fixture of FIG. **1** taken along the line **3-3** in FIG. **2**;

FIG. **4** is a cross-sectional view of the light fixture of FIG. **1** taken along the line **4-4** in FIG. **2**;

FIG. **5** is a perspective view of a second embodiment of the light fixture of the present invention;

FIG. **6** is a bottom plan view of the light fixture of FIG. **5**;

FIG. **7** is a cross-sectional view of the light fixture of FIG. **5** taken along the line **7-7** in FIG. **6**; and,

FIG. **8** is a cross-sectional view of the light fixture of FIG. **5** taken along the line **8-8** in FIG. **6**.

FIGS. **1**, **2**, **4**, **5**, **6**, and **8** are broken away to indicate indeterminate length. The broken lines are shown in FIGS. **1**, **3**, **4**, **5**, **7**, and **8** for illustrative purposes only and form no part of the claimed design. The broken lines in FIGS. **5**, **6**, and **7** shown on the respective end faces of the light fixture are for illustrative purposes only and form no part of the claimed design. The top of the light fixture is unornamented and forms no part of the design.

1 Claim, 6 Drawing Sheets

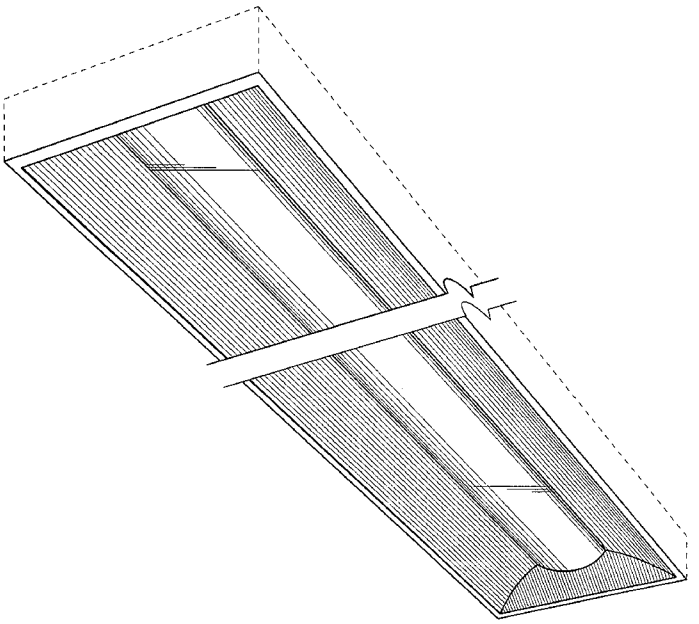

U.S. PATENT DOCUMENTS

D125,001	S	*	2/1941	Klingsick D26/78
D132,296	S	*	5/1942	Hoeveler D26/122
D132,786	S	*	6/1942	Netting D26/78
2,323,073	A	*	6/1943	Netting 362/225
2,339,100	A	*	1/1944	Netting 362/219
D156,743	S	*	1/1950	Kennedy D26/59
2,852,663	A		9/1958	Stuffer et al. 240/51.11
3,125,301	A	*	3/1964	Stotter 362/217
3,265,887	A		8/1966	Wince
3,270,194	A	*	8/1966	Lee 362/218
3,838,268	A		9/1974	Fabbri 240/9
3,860,903	A	*	1/1975	Van Steenhoven 362/279
4,499,529	A	*	2/1985	Figueroa 362/283
D284,110	S	*	6/1986	Mullins D26/76
4,622,624	A	*	11/1986	McCarthy et al. 362/217
4,698,734	A		10/1987	Ngai 362/225
4,799,136	A		1/1989	Molnar 362/300
D300,873	S	*	4/1989	Thompson et al. D26/74
5,062,030	A	*	10/1991	Figueroa 362/346
5,192,129	A	*	3/1993	Figueroa 362/346
D348,950	S	*	7/1994	Herst et al. D26/85
D351,481	S	*	10/1994	Cole, Jr. D26/76
5,555,162	A	*	9/1996	Shemitz 362/225
5,570,947	A	*	11/1996	Felland 362/148
5,746,502	A		5/1998	Huang 362/223
D397,819	S		9/1998	Thorton, Jr. D26/77
D399,586	S	*	10/1998	Ranieri et al. D26/74
D407,473	S	*	3/1999	Wimbock D23/328
D411,641	S	*	6/1999	Ranieri et al. D26/74
D413,402	S	*	8/1999	Ranieri et al. D26/74
5,971,571	A		10/1999	Rose 362/346
5,988,829	A		11/1999	Holder 362/217
5,988,836	A		11/1999	Swarens 362/364
6,102,550	A		8/2000	Edwards, Jr. 362/221
D440,341	S		4/2001	Arumugasaamy D26/85
6,238,065	B1		5/2001	Jones 362/339
6,280,052	B1		8/2001	White 362/225
6,419,375	B1		7/2002	Leadford et al. 362/297
D461,267	S		8/2002	Arumugasaamy D26/85
6,454,442	B1		9/2002	Changaris 362/297
6,485,166	B1		11/2002	Fouke 362/340
D467,676	S		12/2002	Packer et al. D26/72
D467,677	S		12/2002	Ries et al. D26/88
6,505,953	B1		1/2003	Dahlen 362/217
6,505,959	B2		1/2003	Masaki et al. 362/339
6,530,681	B2		3/2003	Sieczkowski 362/404
6,537,649	B1		3/2003	Martin et al. 428/172
D472,665	S		4/2003	Herst et al. D26/113
D472,666	S		4/2003	Herst et al. D26/113
D472,667	S		4/2003	Herst et al. D26/113
D472,668	S		4/2003	Herst et al. D26/113
D473,007	S		4/2003	Herst et al. D26/113
D473,335	S		4/2003	Bohard et al. D26/113
6,540,382	B1		4/2003	Simon 362/339
D477,891	S		7/2003	Fritze et al. D26/74
D480,168	S		9/2003	Herst et al. D26/77
D480,172	S		9/2003	Herst et al. D26/121
6,612,718	B1		9/2003	Packer et al. 362/267
6,612,723	B2		9/2003	Futhey et al. 362/339
D480,500	S		10/2003	Herst et al. D26/121
D480,501	S		10/2003	Herst et al. D26/121
D480,502	S		10/2003	Herst et al. D26/121
D480,503	S		10/2003	Herst et al. D26/121
D480,530	S		10/2003	Herst et al. 121/77
D480,830	S		10/2003	Sieczkowski D26/118
D481,488	S		10/2003	Herst et al. D26/121
D481,489	S		10/2003	Cline et al. D26/128
6,637,912	B2		10/2003	Arumugasaamy et al. .. 362/327
D481,820	S		11/2003	Watt D26/77
6,652,118	B2		11/2003	Shemitz et al. 362/225
D483,510	S		12/2003	Fritze et al. D26/75
6,655,819	B2		12/2003	Loga et al. 362/263
D485,932	S		1/2004	Crane D26/76
D487,527	S		3/2004	Sieczkowski D26/76
6,709,131	B1		3/2004	Herst et al. 362/223
6,726,345	B2		4/2004	Arumugusaamy et al. .. 362/327
D496,121	S	*	9/2004	Santoro D26/74
2002/0080615	A1		6/2002	Marshall et al. 362/333

OTHER PUBLICATIONS

Lithonia Lighting, an Acuity Brands Company, Avante, Recessed Direct/Indirect Lighting, pp. 1-4 (1996).
Lithonia Lighting, an Acuity Brands Company, Avante, Direct/Indirect General Lighting System, pp. 1-2 (1995).
Lightolier, CFI Fluorescent, Alter Soft Lights, 1-8 (1996).
Alter, pp. 1-6 (1994).
Lithonia Lighting, an Acuity Brands Company, Product Selection Guide, 8th Edition, pp. 1-620 (2003).
Lithonia Lighting, an Acuity Brands Company, Avante Recessed Direct/Indirect Lighting, pp. 1-3 (1997).
Lithonia Lighting, an Acuity Brands Company, Architectural Fluorescent Recessed Direct/Indirect Lighting, pp. 1-13 (1999).
Genlyte/Thomas, Lightolier, Alter Soft Lights, pp. 1-67 (2003).
Cooper Lighting, Metalux, p. 1-8 (1999).
Columbia Lighting, Stratus, pp. 1-9, (1998).
Focal Point, Luna, pp. 1-5 (1997).
Lithonia Lighting, an Acuity Brands Company, Direct/Indirect Lighting, pp. 1-15 (2002).
Lithonia Lighting, an Acuity Brands Company, Product Selection Guide, 8th ed. p. 14-93, 112-115.

* cited by examiner

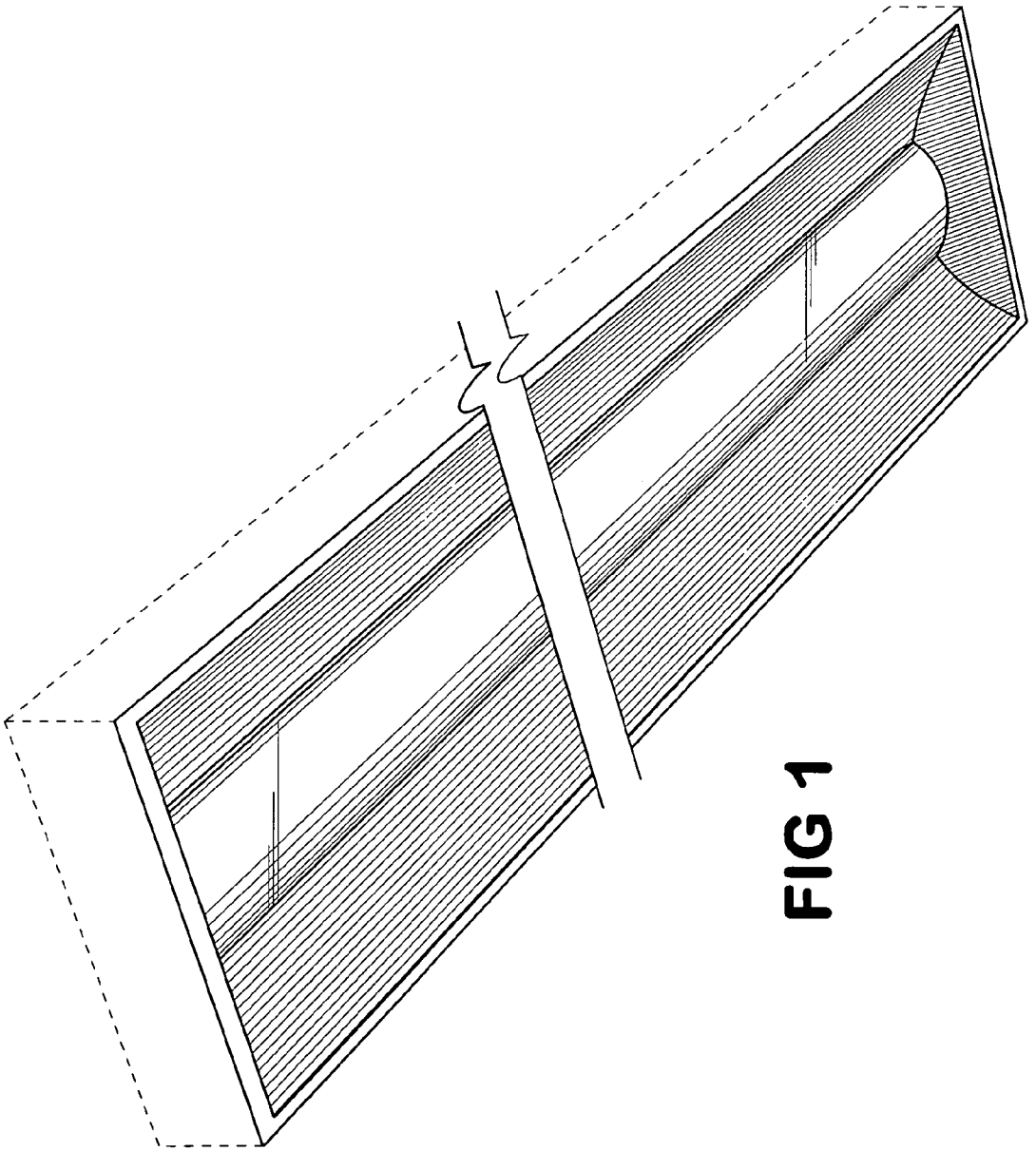

FIG 1

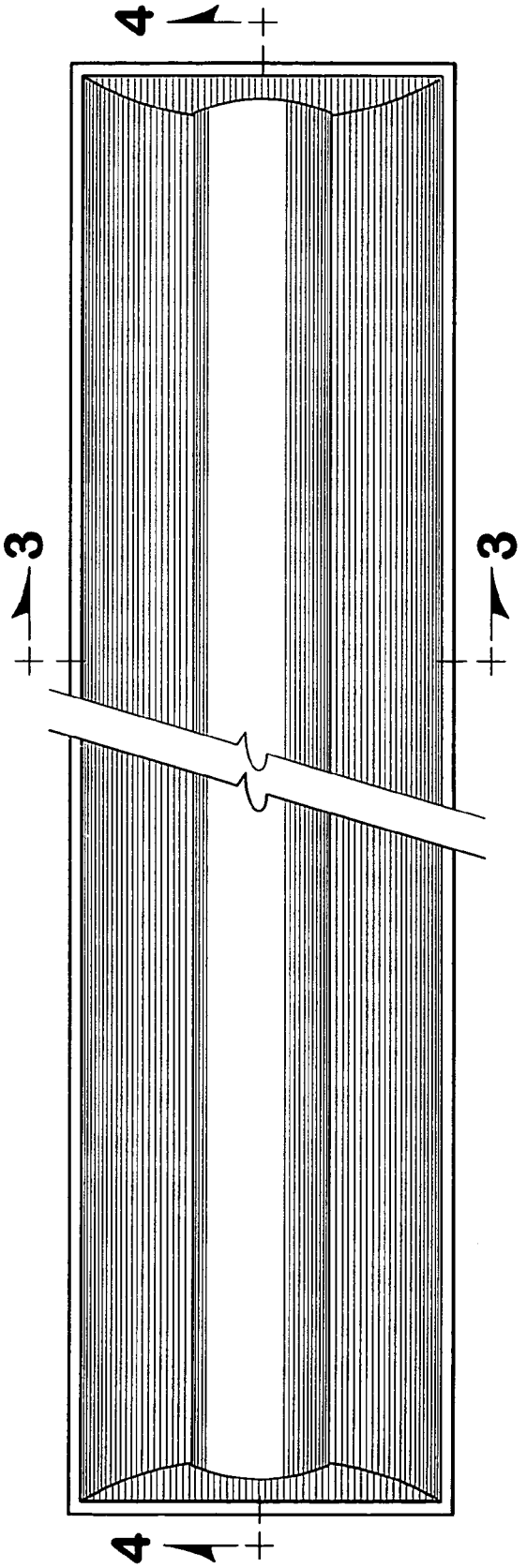

FIG 2

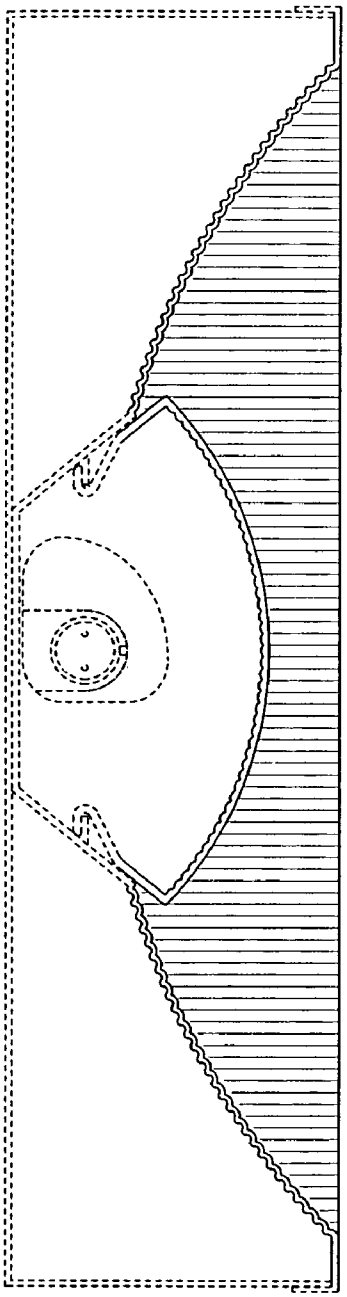

FIG 3

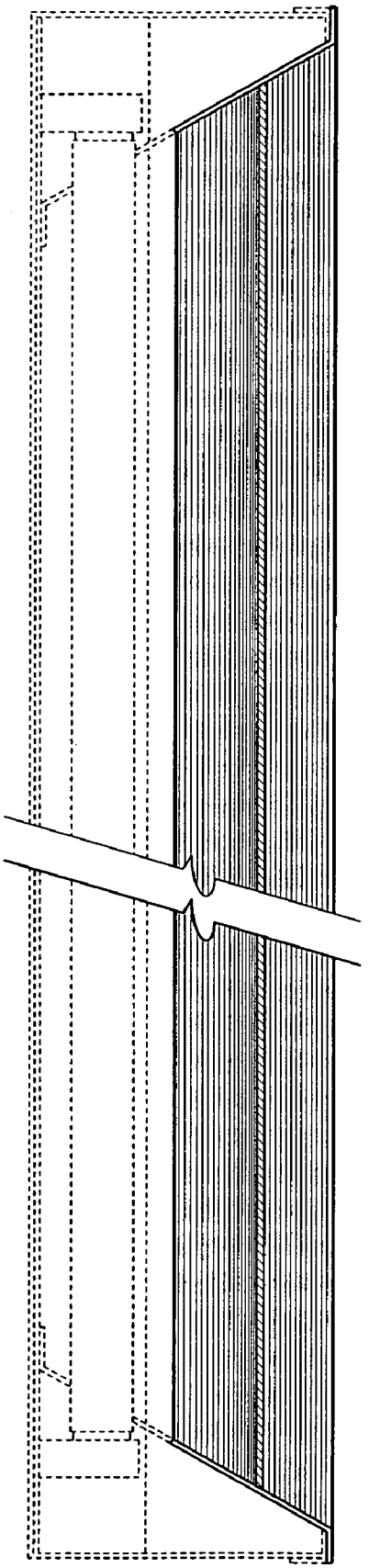

FIG 4

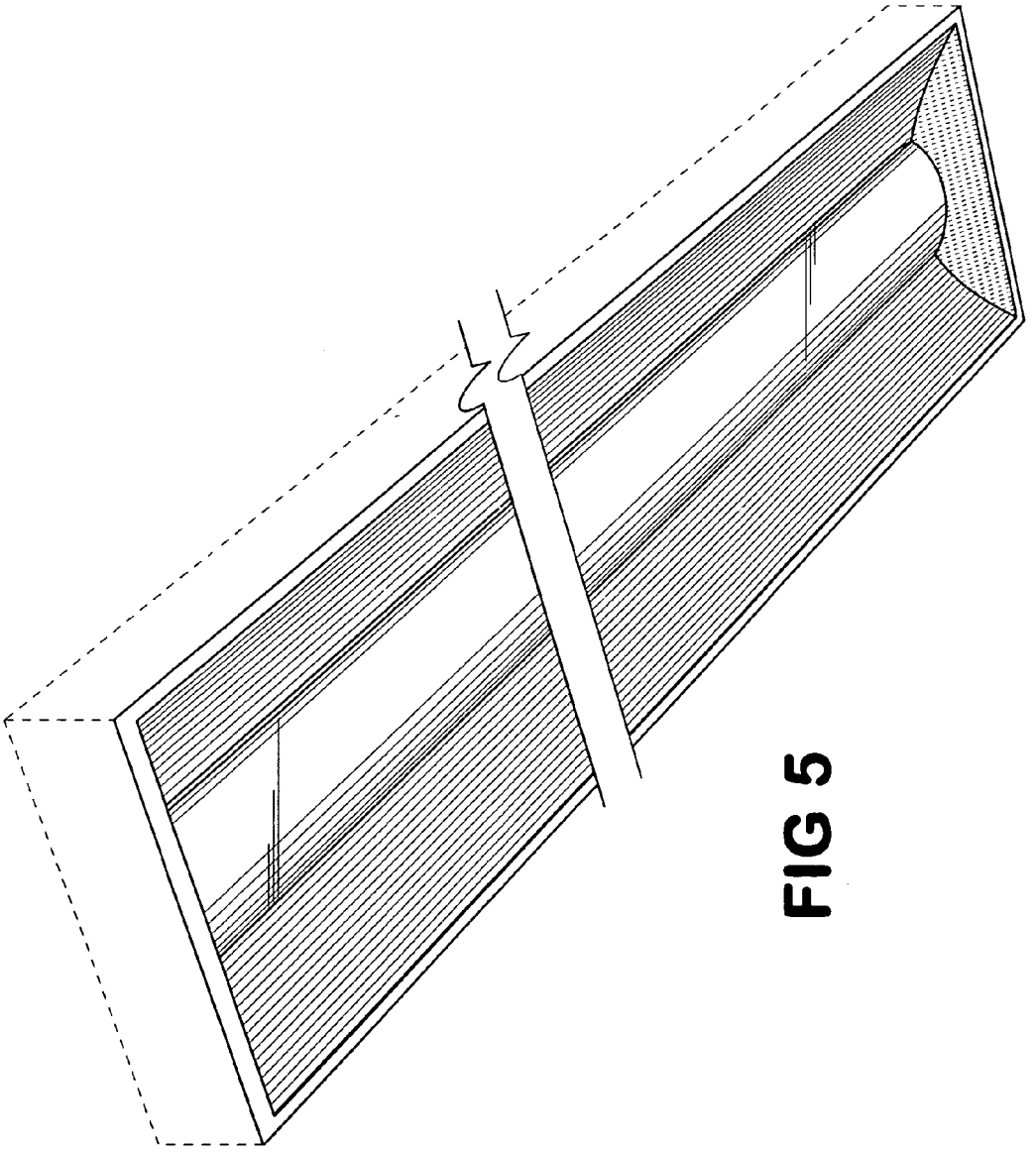

FIG 5

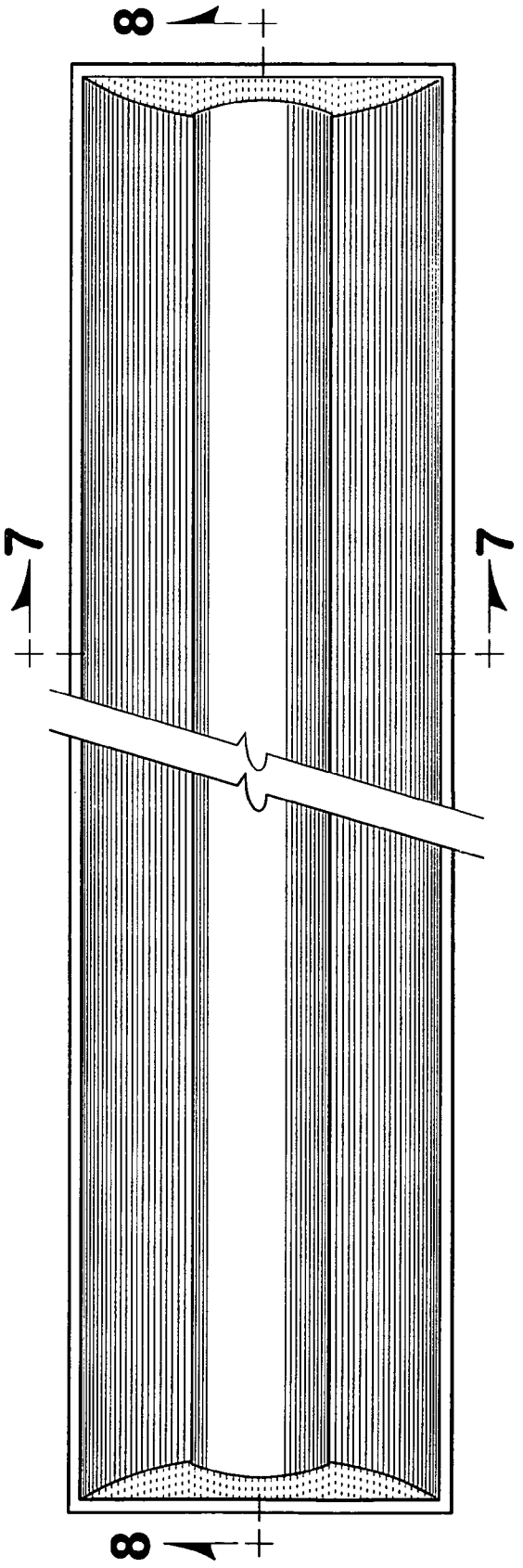

FIG 6

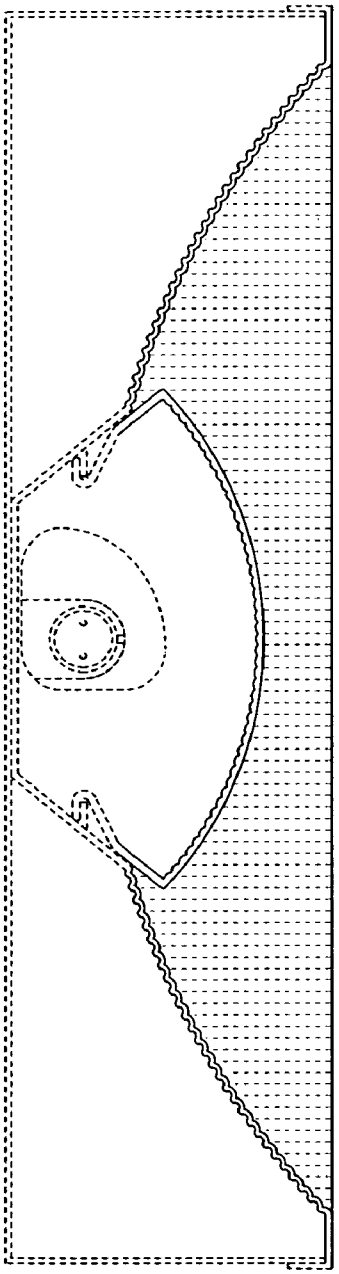

FIG 7

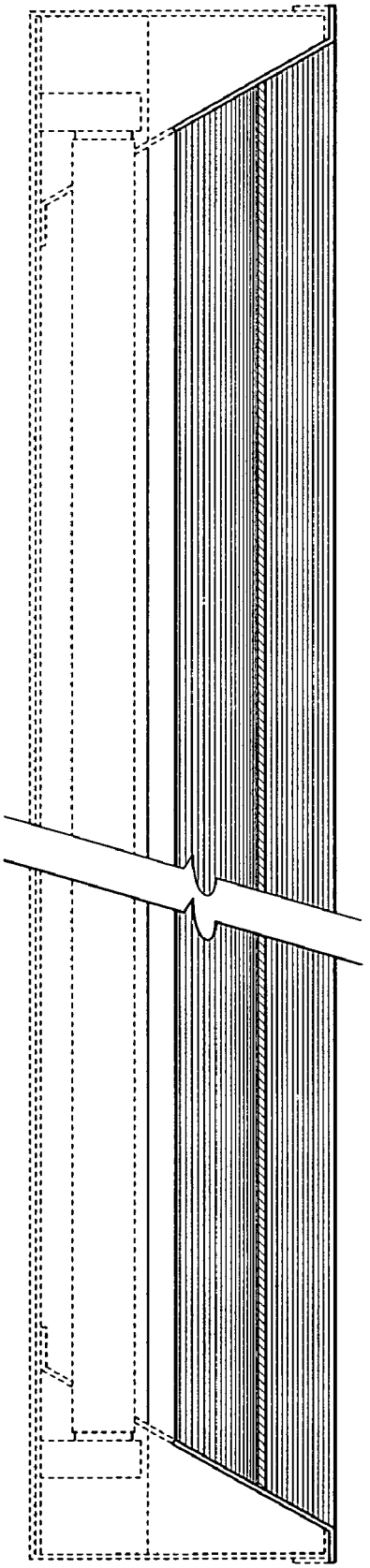

FIG 8

EXHIBIT J

US00D545991S

(12) United States Design Patent

Mayfield, III et al.

(10) Patent No.: US D545,991 S
(45) Date of Patent: ** Jul. 3, 2007

(54) **LIGHT FIXTURE HOUSING**

(75) Inventors: **John T. Mayfield, III**, Loganville, GA (US); **Kevin Leadford**, Evergreen, CO (US); **Stephen H. Lydecker**, Snellville, GA (US)

(73) Assignee: **Acuity Brands, Inc.**, Atlanta, GA (US)

(**) Term: **14 Years**

(21) Appl. No.: **29/215,571**

(22) Filed: **Oct. 21, 2004**

(51) **LOC (8) Cl.** **26-99**
(52) **U.S. Cl.** **D26/118**
(58) **Field of Classification Search** D26/118, D26/76, 75, 152, 138, 77, 121, 74, 142, 128, D26/113, 119, 120, 122; 362/223, 263, 225, 362/339, 404, 219, 217, 364, 291, 328, 257, 362/260, 317, 326, 330, 341
See application file for complete search history.

(56) **References Cited**

U.S. PATENT DOCUMENTS

D85,382	S	*	10/1931	Guth	D26/24
1,888,103	A	*	11/1932	Guth	362/348
D125,001	S	*	2/1941	Klingsick	D26/78
D132,296	S	*	5/1942	Hoeveler	D26/122
D132,786	S	*	6/1942	Netting	D26/78
2,323,073	A	*	6/1943	Netting	362/225
2,339,100	A	*	1/1944	Netting	362/219

(Continued)

OTHER PUBLICATIONS

Peerless-Lighting, Parallels, pp. 1-2 (2005).

(Continued)

Primary Examiner—Freda S. Nunn
Assistant Examiner—Kevin K. Rudzinski
(74) *Attorney, Agent, or Firm*—Needle & Rosenberg, P.C.

(57) **CLAIM**

The ornamental design for a light fixture housing, as shown and described.

DESCRIPTION

FIG. **1** is a perspective view of a light fixture housing of the present invention;

FIG. **2** is a bottom plan view of the light fixture housing of FIG. **1**;

FIG. **3** is a cross-sectional view of the light fixture housing of FIG. **1** taken along the line **3-3** in FIG. **2**;

FIG. **4** is a cross-sectional view of the light fixture housing of FIG. **1** taken along the line **4-4** in FIG. **2**;

FIG. **5** is a perspective view of a second embodiment of the light fixture housing of the present invention;

FIG. **6** is a bottom plan view of the light fixture housing of FIG. **5**;

FIG. **7** is a cross-sectional view of the light fixture housing of FIG. **5** taken along the line **7-7** in FIG. **6**; and,

FIG. **8** is a cross-sectional view of the light fixture housing of FIG. **5** taken along the line **8-8** in FIG. **6**.

FIGS. **1**, **2**, **4**, **5**, **6**, and **8** are broken away to indicate indeterminate length. The broken lines are shown in FIGS. **1**, **3**, **4**, **5**, **7**, and **8** for illustrative purposes only and form no part of the claimed design. The broken lines in FIGS. **1**, **2**, **3**, **5**, **6**, and **7** shown on the respective end faces of the light fixture housing are for illustrative purposes only and form no part of the claimed design. The top of the light fixture housing is unornamented and forms no part of the design.

1 Claim, 6 Drawing Sheets

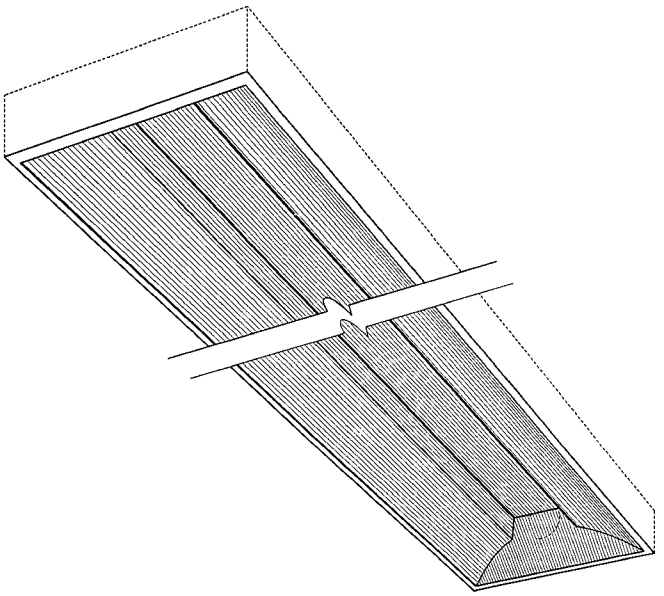

U.S. PATENT DOCUMENTS

D156,743	S *	1/1950	Kennedy	D26/59
2,852,663	A	9/1958	Stuffer et al.	240/51.11
3,125,301	A *	3/1964	Stotter	362/217
3,265,887	A	8/1966	Wince	
3,270,194	A *	8/1966	Lee	362/218
3,838,268	A	9/1974	Fabbri	240/9
3,860,903	A *	1/1975	Van Steenhoven	362/279
4,499,529	A *	2/1985	Figueroa	362/283
D284,110	S *	6/1986	Mullins	D26/76
4,622,624	A *	11/1986	McCarthy et al.	362/217
4,698,734	A	10/1987	Ngai	362/225
4,799,136	A	1/1989	Molnar	362/300
D300,873	S *	4/1989	Thompson et al.	D26/74
5,062,030	A *	10/1991	Figueroa	362/346
5,192,129	A *	3/1993	Figueroa	362/346
D348,950	S *	7/1994	Herst et al.	D26/86
D351,481	S *	10/1994	Cole, Jr.	D26/76
5,555,162	A *	9/1996	Shemitz	362/225
5,570,947	A *	11/1996	Felland	362/148
5,746,502	A	5/1998	Huang	362/223
D397,819	S	9/1998	Thorton, Jr.	D26/77
D399,586	S *	10/1998	Ranieri et al.	D26/74
D407,473	S *	3/1999	Wimbock	D23/328
D411,641	S *	6/1999	Ranieri et al.	D26/74
D413,402	S *	8/1999	Ranieri et al.	D26/74
5,971,571	A	10/1999	Rose	362/346
5,988,829	A	11/1999	Holder	362/217
5,988,836	A	11/1999	Swarens	362/364
6,102,550	A	8/2000	Edwards, Jr.	362/221
D440,341	S	4/2001	Arumugasaamy	D26/85
6,238,065	B1	5/2001	Jones	362/339
6,280,052	B1	8/2001	White	362/225
6,419,375	B1	7/2002	Leadford et al.	362/297
D461,267	S	8/2002	Arumugasaamy	D26/85
6,454,442	B1	9/2002	Changaris	362/297
6,485,166	B1	11/2002	Fouke	362/340
D467,676	S	12/2002	Packer et al.	D26/72
D467,677	S	12/2002	Ries et al.	D26/88
6,505,953	B1	1/2003	Dahlen	362/217
6,505,959	B2	1/2003	Masaki et al.	362/339
6,530,681	B2	3/2003	Sieczkowski	362/404
6,537,649	B1	3/2003	Martin et al.	428/172
D472,665	S	4/2003	Herst et al.	D26/113
D472,666	S	4/2003	Herst et al.	D26/113
D472,667	S	4/2003	Herst et al.	D26/113
D472,668	S	4/2003	Herst et al.	D26/113
D473,007	S	4/2003	Herst et al.	D26/113
D473,335	S	4/2003	Bohard et al.	D26/113
6,540,382	B1	4/2003	Simon	362/339
D477,891	S	7/2003	Fritze et al.	D26/74
D480,168	S	9/2003	Herst et al.	D26/77
D480,172	S	9/2003	Herst et al.	D26/121
6,612,718	B1	9/2003	Packer et al.	362/267
6,612,723	B2	9/2003	Futhey et al.	362/339
D480,500	S	10/2003	Herst et al.	D26/121
D480,501	S	10/2003	Herst et al.	D26/121
D480,502	S	10/2003	Herst et al.	D26/121
D480,503	S	10/2003	Herst et al.	D26/121
D480,530	S	10/2003	Herst et al.	121/77
D480,830	S	10/2003	Sieczkowski	D26/118
D481,488	S	10/2003	Herst et al.	D26/121
D481,489	S	10/2003	Cline et al.	D26/128
6,637,912	B2	10/2003	Arumugasaamy et al.	362/327
D481,820	S	11/2003	Watt	D26/77
6,652,118	B2	11/2003	Shemitz et al.	362/225
D483,510	S	12/2003	Fritze et al.	D26/75
6,655,819	B2	12/2003	Loga et al.	362/263
D485,932	S	1/2004	Crane	D26/76
D487,527	S	3/2004	Sieczkowski	D26/76
6,709,131	B1	3/2004	Herst et al.	362/223
6,726,345	B2	4/2004	Arumugusaamy et al.	362/327
D496,121	S *	9/2004	Santoro	D26/74
2002/0080615	A1	6/2002	Marshall et al.	362/333

OTHER PUBLICATIONS

Lithonia Lighting, an Acuity Brands Company, Avante, Recessed Direct/Indirect Lighting, pp. 1-4 (1996).
Lithonia Lighting, an Acuity Brands Company, Avante, Direct/Indirect General Lighting System, pp. 1-2 (1995).
Lightolier, CFI Fluorescent, Alter Soft Lights, 1-8 (1996).
Alter, pp. 1-6 (1994).
Lithonia Lighting, an Acuity Brands Company, Product Selection Guide, 8th Edition, pp. 1-620 (2003).
Lithonia Lighting, an Acuity Brands Company, Avante Recessed Direct/Indirect Lighting, pp. 1-3 (1997).
Lithonia Lighting, an Acuity Brands Company, Architectural Fluorescent Recessed Direct/Indirect Lighting, pp. 1-13 (1999).
Genlyte/Thomas, Lightolier, Alter Soft Lights, pp. 1-67 (2003).
Cooper Lighting, Metalux, p. 1-8 (1999).
Columbia Lighting, Stratus, pp. 1-9, (1998).
Focal Point, Luna, pp. 1-5 (1997).
Lithonia Lighting, an Acuity Brands Company, Direct/Indirect Lighting, pp. 1-15 (2002).
Lithonia Lighting, an Acuity Brands Company, Product Selection Guide, 8th ed. p. 14-93, 112-115.

* cited by examiner

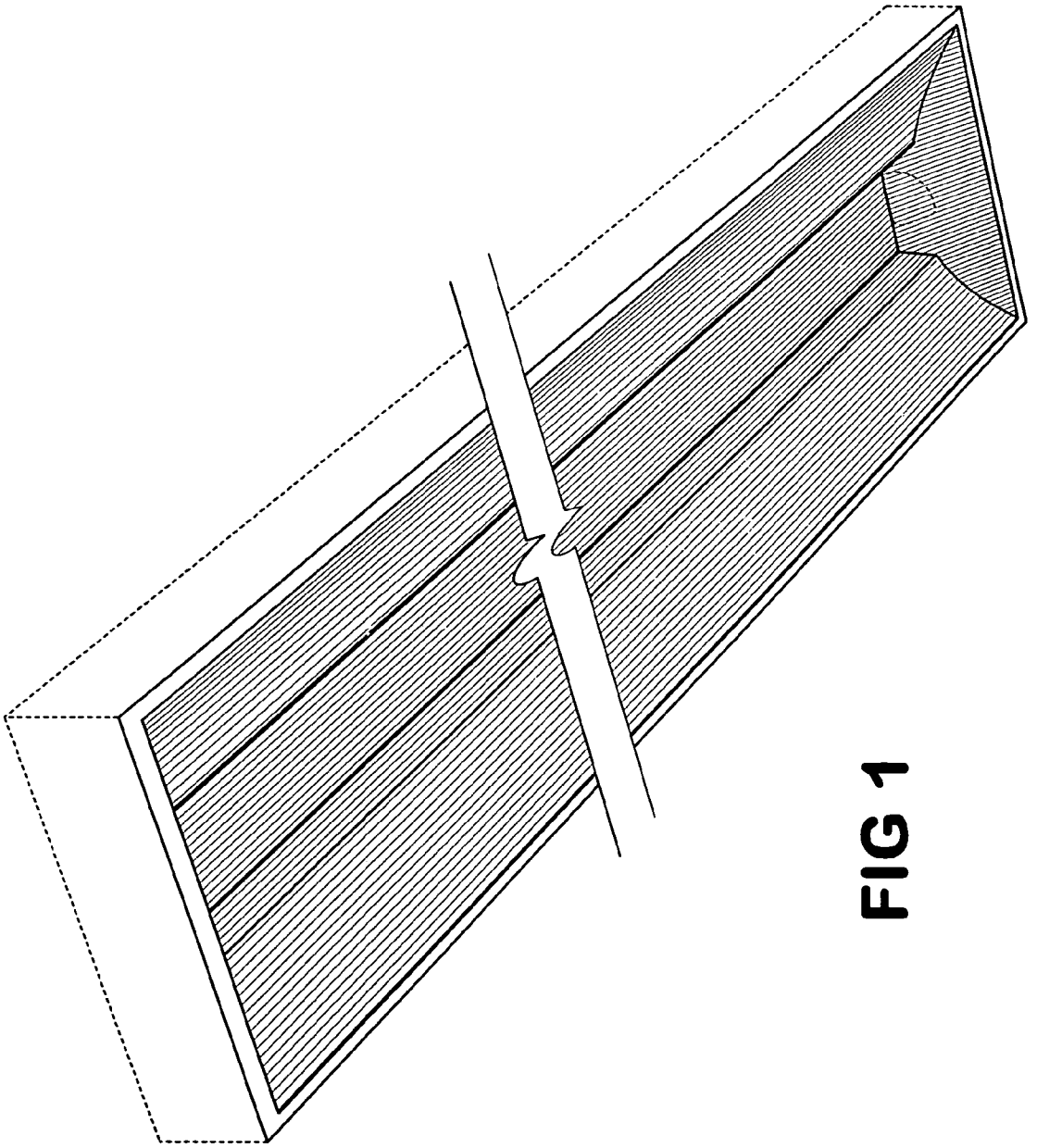

FIG 1

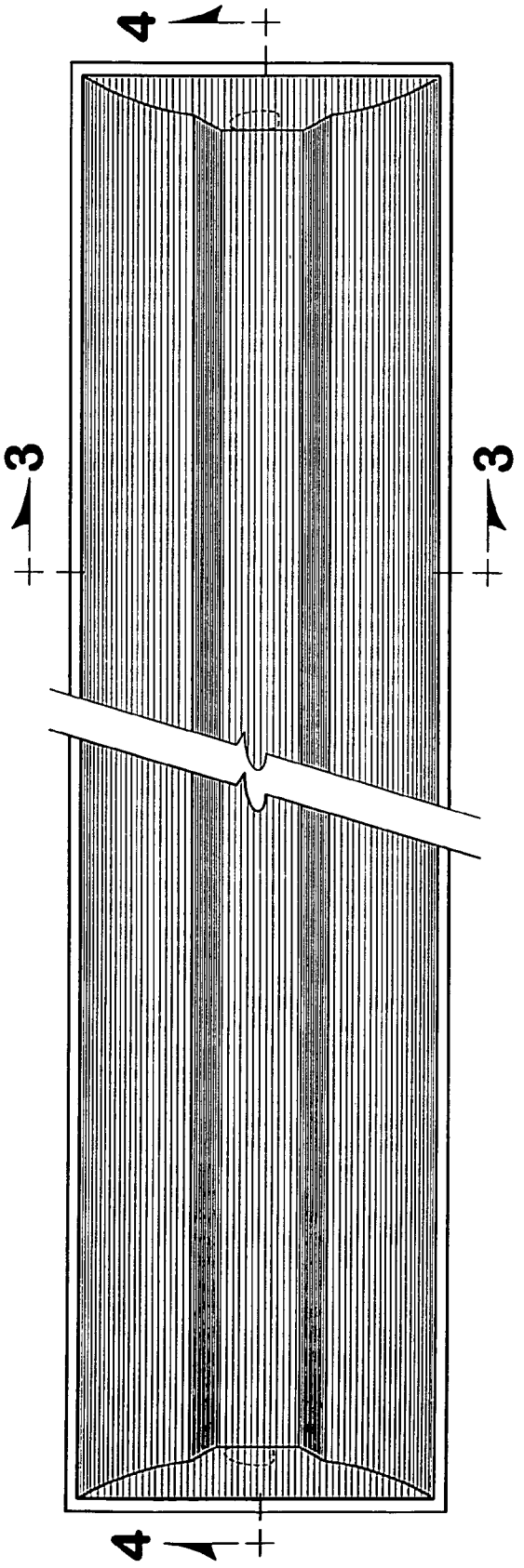

FIG 2

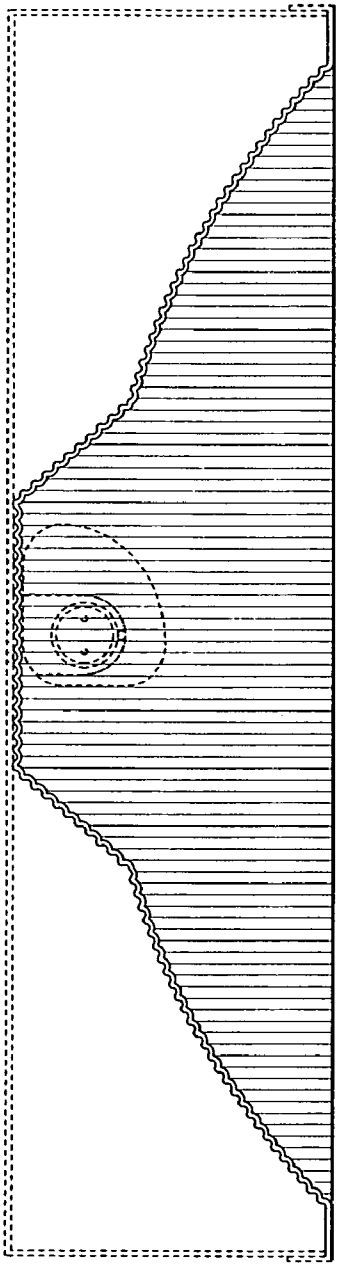

FIG 3

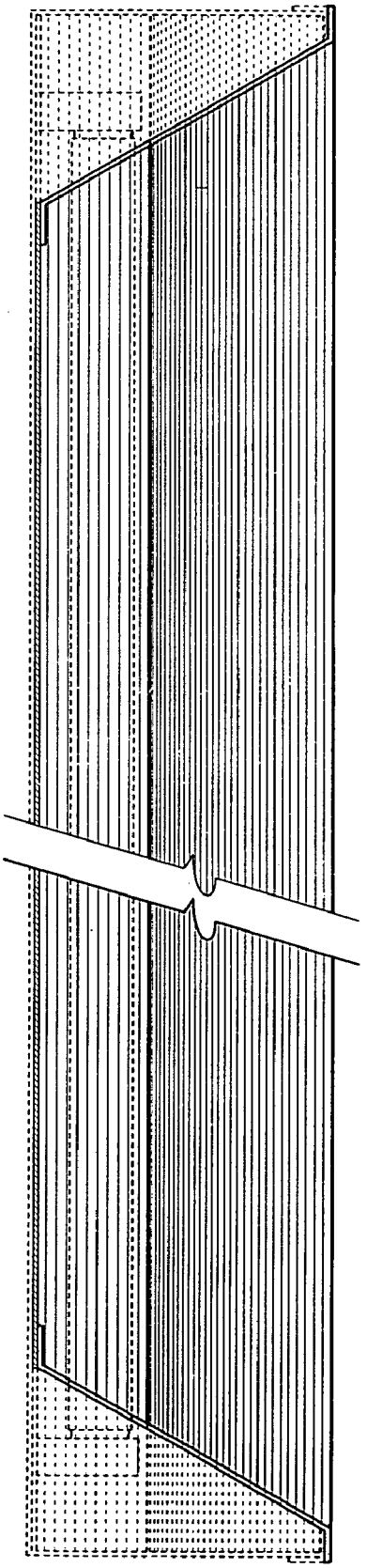

FIG 4

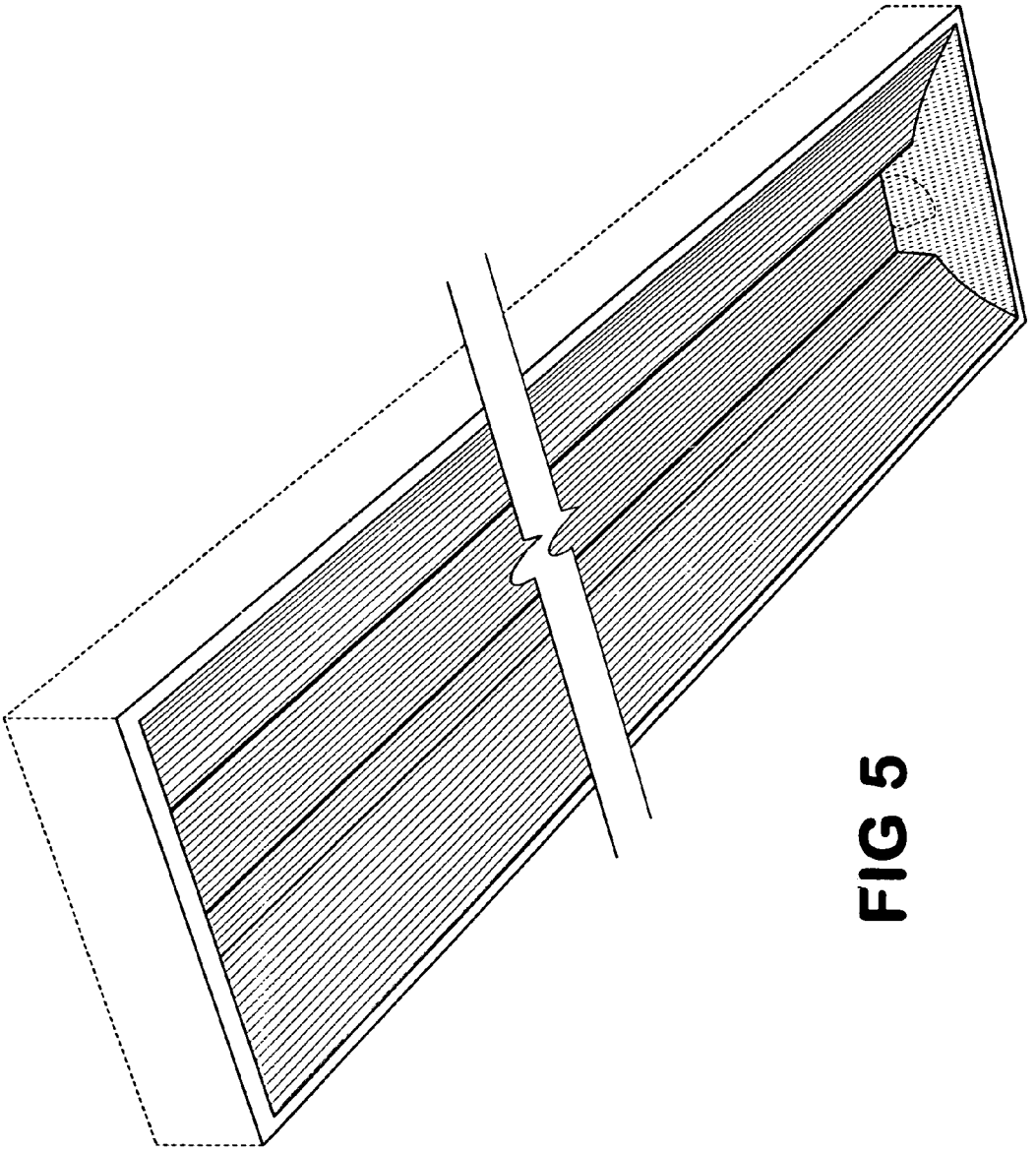

FIG 5

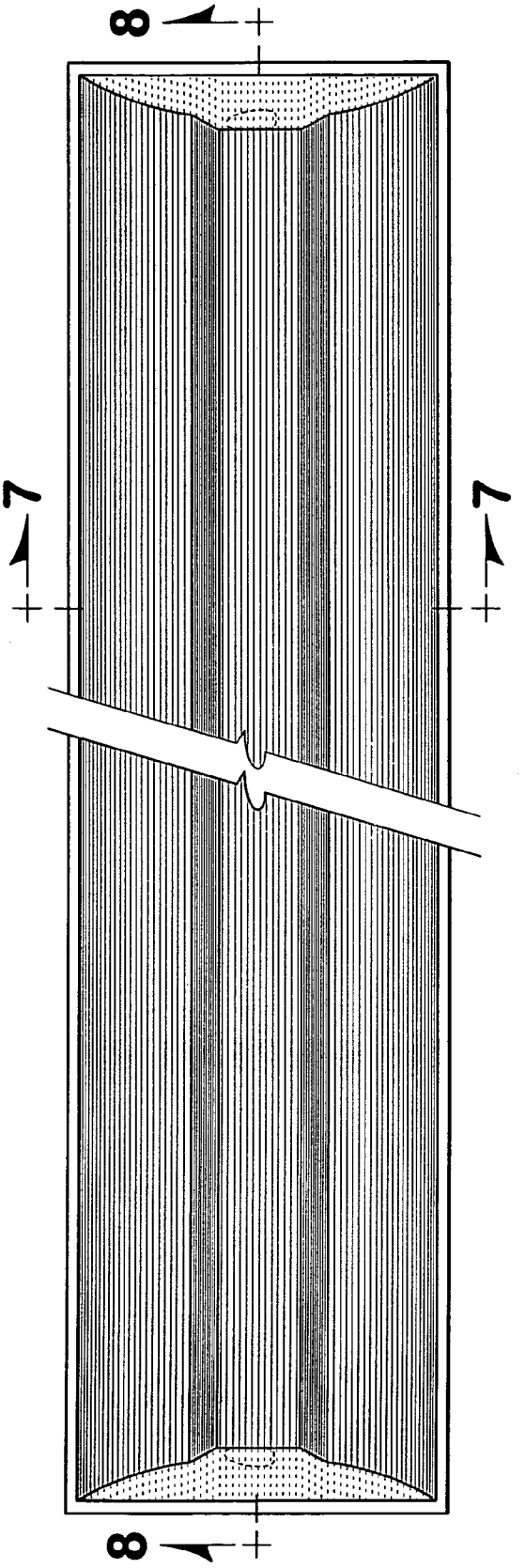

FIG 6

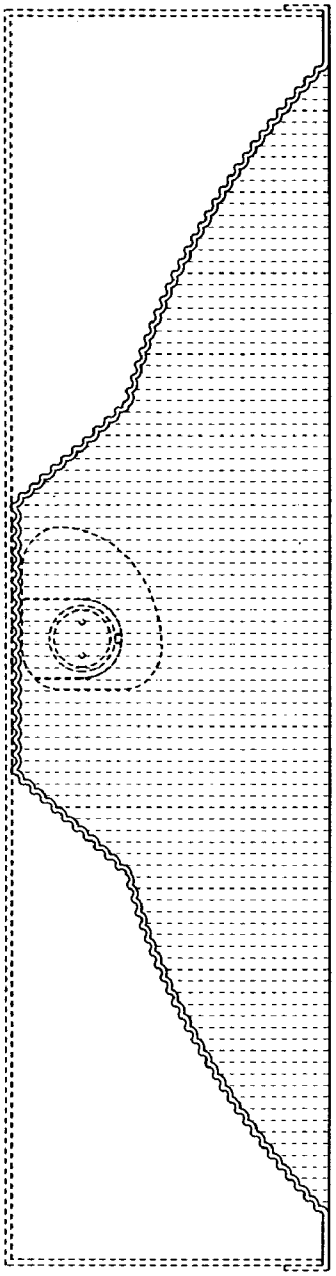

FIG 7

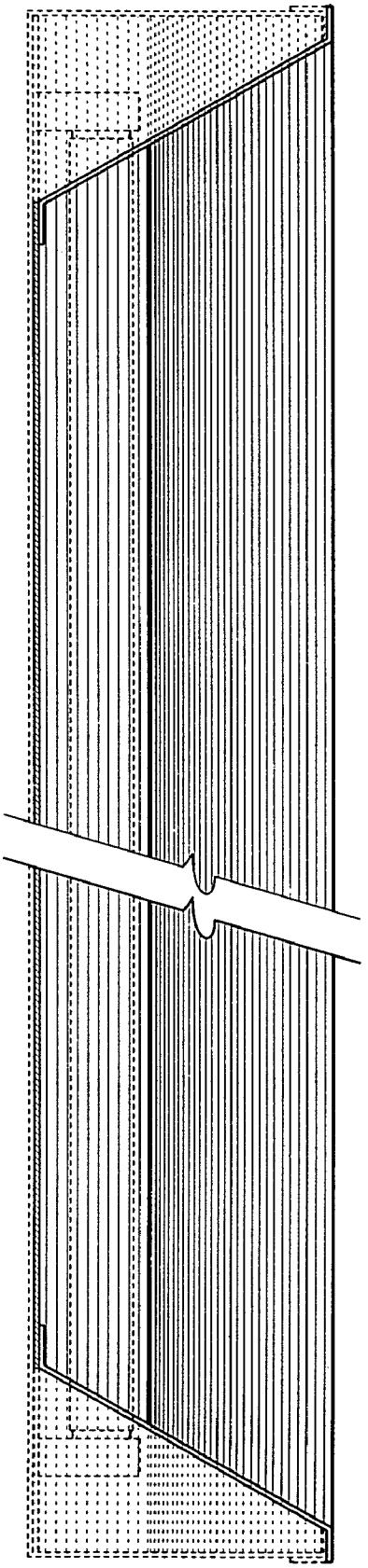

FIG 8

EXHIBIT K

US00D545992S

(12) United States Design Patent

Mayfield, III et al.

(10) Patent No.: US D545,992 S
(45) Date of Patent: ** Jul. 3, 2007

(54) **LIGHT FIXTURE**

(75) Inventors: **John T. Mayfield, III**, Loganville, GA (US); **Carl T. Gould**, Boulder, CO (US); **Kevin Leadford**, Evergreen, CO (US); **Stephen H. Lydecker**, Snellville, GA (US)

(73) Assignee: **Acuity Brands, Inc.**, Atlanta, GA (US)

(**) Term: **14 Years**

(21) Appl. No.: **29/215,589**

(22) Filed: **Oct. 21, 2004**

(51) **LOC (8) Cl.** **26-99**
(52) **U.S. Cl.** **D26/118**
(58) **Field of Classification Search** D26/118, D26/76, 75, 152, 138, 77, 121, 74, 142, 128, D26/113, 119, 120, 122; 362/223, 263, 225, 362/339, 404, 219, 217, 364, 291, 328, 257, 362/260, 317, 326, 330, 341
See application file for complete search history.

(56) **References Cited**

U.S. PATENT DOCUMENTS

D85,382	S	*	10/1931	Guth	D26/24
1,888,103	A	*	11/1932	Guth	362/348
D125,001	S	*	2/1941	Klingsick	D26/78
D132,296	S	*	5/1942	Hoeveler	D26/122
D132,786	S	*	6/1942	Netting	D26/78
2,323,073	A	*	6/1943	Netting	362/225
2,339,100	A	*	1/1944	Netting	362/219
D156,743	S	*	1/1950	Kennedy	D26/59
2,852,663	A		9/1958	Stuffer et al.	240/51.11
3,125,301	A	*	3/1964	Stotter	362/217
3,265,887	A		8/1966	Wince	
3,270,194	A	*	8/1966	Lee	362/218
3,838,268	A		9/1974	Fabbri	240/9

(Continued)

OTHER PUBLICATIONS

Peerless-Lighting, Parallels, pp. 1-2 (2005).

(Continued)

Primary Examiner—Freda S. Nunn
Assistant Examiner—Kevin K. Rudzinski
(74) *Attorney, Agent, or Firm*—Needle & Rosenberg, P.C.

(57) **CLAIM**

The ornamental design for a light fixture, as shown and described.

DESCRIPTION

FIG. **1** is a perspective view of a light fixture of the present invention;

FIG. **2** is a bottom plan view of the light fixture of FIG. **1**;

FIG. **3** is a cross-sectional view of the light fixture of FIG. **1** taken along the line **3-3** in FIG. **2**;

FIG. **4** is a cross-sectional view of the light fixture of FIG. **1** taken along the line **4-4** in FIG. **2**;

FIG. **5** is a perspective view of a second embodiment of the light fixture of the present invention;

FIG. **6** is a bottom plan view of the light fixture of FIG. **5**;

FIG. **7** is a cross-sectional view of the light fixture of FIG. **5** taken along the line **7-7** in FIG. **6**; and,

FIG. **8** is a cross-sectional view of the light fixture of FIG. **5** taken along the line **8-8** in FIG. **6**.

FIGS. **1**, **2**, **4**, **5**, **6**, and **8** are broken away to indicate indeterminate length. The broken lines are shown in FIGS. **1**, **3**, **4**, **5**, **7**, and **8** for illustrative purposes only and form no part of the claimed design. The broken lines in FIGS. **5**, **6**, and **7** on the respective end faces of the light fixture are for illustrative purposes only and form no part of the claimed design. The top of the light fixture is unornamented and forms no part of the design.

1 Claim, 6 Drawing Sheets

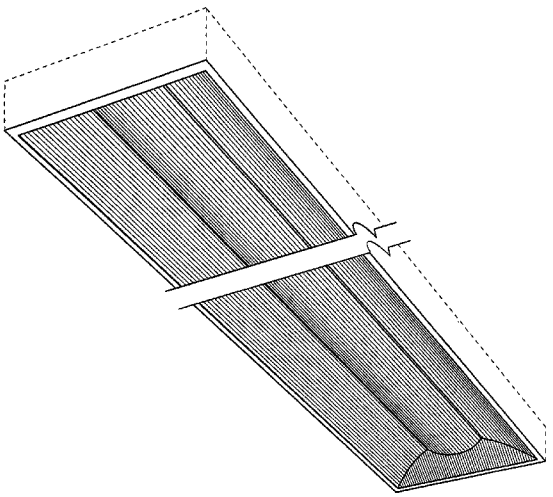

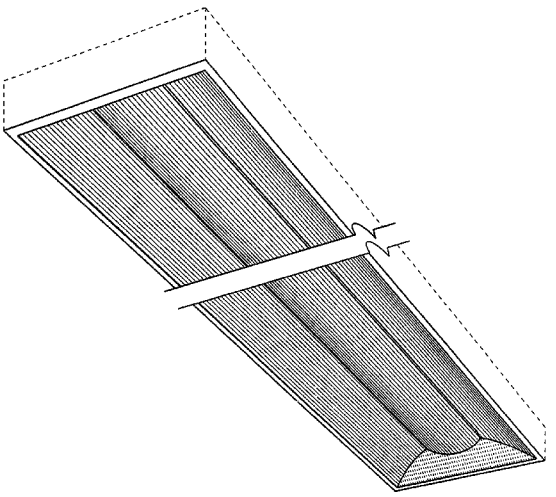

U.S. PATENT DOCUMENTS

3,860,903	A *	1/1975	Van Steenhoven	362/279
4,499,529	A *	2/1985	Figueroa	362/283
D284,110	S *	6/1986	Mullins	D26/76
4,622,624	A *	11/1986	McCarthy et al.	362/217
4,698,734	A	10/1987	Ngai	362/225
4,799,136	A	1/1989	Molnar	362/300
D300,873	S *	4/1989	Thompson et al.	D26/74
5,062,030	A *	10/1991	Figueroa	362/346
5,192,129	A *	3/1993	Figueroa	362/346
D348,950	S *	7/1994	Herst et al.	D26/85
D351,481	S *	10/1994	Cole, Jr.	D26/76
5,555,162	A *	9/1996	Shemitz	362/225
5,570,947	A *	11/1996	Felland	362/148
5,746,502	A	5/1998	Huang	362/223
D397,819	S	9/1998	Thorton, Jr.	D26/77
D399,586	S *	10/1998	Ranieri et al.	D26/74
D407,473	S *	3/1999	Wimbock	D23/328
D411,641	S *	6/1999	Ranieri et al.	D26/74
D413,402	S *	8/1999	Ranieri et al.	D26/74
5,971,571	A	10/1999	Rose	362/346
5,988,829	A	11/1999	Holder	362/217
5,988,836	A	11/1999	Swarens	362/364
6,102,550	A	8/2000	Edwards, Jr.	362/221
D440,341	S	4/2001	Arumugasaamy	D26/85
6,238,065	B1	5/2001	Jones	362/339
6,280,052	B1	8/2001	White	362/225
6,419,375	B1	7/2002	Leadford et al.	362/297
D461,267	S	8/2002	Arumugasaamy	D26/85
6,454,442	B1	9/2002	Changaris	362/297
6,485,166	B1	11/2002	Fouke	362/340
D467,676	S	12/2002	Packer et al.	D26/72
D467,677	S	12/2002	Ries et al.	D26/88
6,505,953	B1	1/2003	Dahlen	362/217
6,505,959	B2	1/2003	Masaki et al.	362/339
6,530,681	B2	3/2003	Sieczkowski	362/404
6,537,649	B1	3/2003	Martin et al.	428/172
D472,665	S	4/2003	Herst et al.	D26/113
D472,666	S	4/2003	Herst et al.	D26/113
D472,667	S	4/2003	Herst et al.	D26/113
D472,668	S	4/2003	Herst et al.	D26/113
D473,007	S	4/2003	Herst et al.	D26/113
D473,335	S	4/2003	Bohard et al.	D26/113
6,540,382	B1	4/2003	Simon	362/339
D477,891	S	7/2003	Fritze et al.	D26/74
D480,168	S	9/2003	Herst et al.	D26/77
D480,172	S	9/2003	Herst et al.	D26/121
6,612,718	B1	9/2003	Packer et al.	362/267
6,612,723	B2	9/2003	Futhey et al.	362/339
D480,500	S	10/2003	Herst et al.	D26/121
D480,501	S	10/2003	Herst et al.	D26/121
D480,502	S	10/2003	Herst et al.	D26/121
D480,503	S	10/2003	Herst et al.	D26/121
D480,530	S	10/2003	Herst et al.	121/77
D480,830	S	10/2003	Sieczkowski	D26/118
D481,488	S	10/2003	Herst et al.	D26/121
D481,489	S	10/2003	Cline et al.	D26/128
6,637,912	B2	10/2003	Arumugasaamy et al.	362/327
D481,820	S	11/2003	Watt	D26/77
6,652,118	B2	11/2003	Shemitz et al.	362/225
D483,510	S	12/2003	Fritze et al.	D26/75
6,655,819	B2	12/2003	Loga et al.	362/263
D485,932	S	1/2004	Crane	D26/76
D487,527	S	3/2004	Sieczkowski	D26/76
6,709,131	B1	3/2004	Herst et al.	362/223
6,726,345	B2	4/2004	Arumugasaamy et al.	362/327
D496,121	S *	9/2004	Santoro	D26/74
2002/0080615	A1	6/2002	Marshall et al.	362/333

OTHER PUBLICATIONS

Lithonia Lighting, an Acuity Brands Company, Avante, Recessed Direct/Indirect Lighting, pp. 1-4 (1996).
Lithonia Lighting, an Acuity Brands Company, Avante, Direct/Indirect General Lighting System, pp. 1-2 (1995).
Lightolier, CFI Fluorescent, Alter Soft Lights, 1-8 (1996).
Alter, pp. 1-6 (1994).
Lithonia Lighting, an Acuity Brands Company, Product Selection Guide, 8th Edition, pp. 1-620 (2003).
Lithonia Lighting, an Acuity Brands Company, Avante Recessed Direct/Indirect Lighting, pp. 1-3 (1997).
Lithonia Lighting, an Acuity Brands Company, Architectural Fluorescent Recessed Direct/Indirect Lighting, pp. 1-13 (1999).
Genlyte/Thomas, Lightolier, Alter Soft Lights, pp. 1-67 (2003).
Cooper Lighting, Metalux, p. 1-8 (1999).
Columbia Lighting, Stratus, pp. 1-9, (1998).
Focal Point, Luna, pp. 1-5 (1997).
Lithonia Lighting, an Acuity Brands Company, Direct/Indirect Lighting, pp. 1-15 (2002).
Lithonia Lighting, an Acuity Brands Company, Product Selection Guide, 8th ed. p. 14-93, 112-115.

* cited by examiner

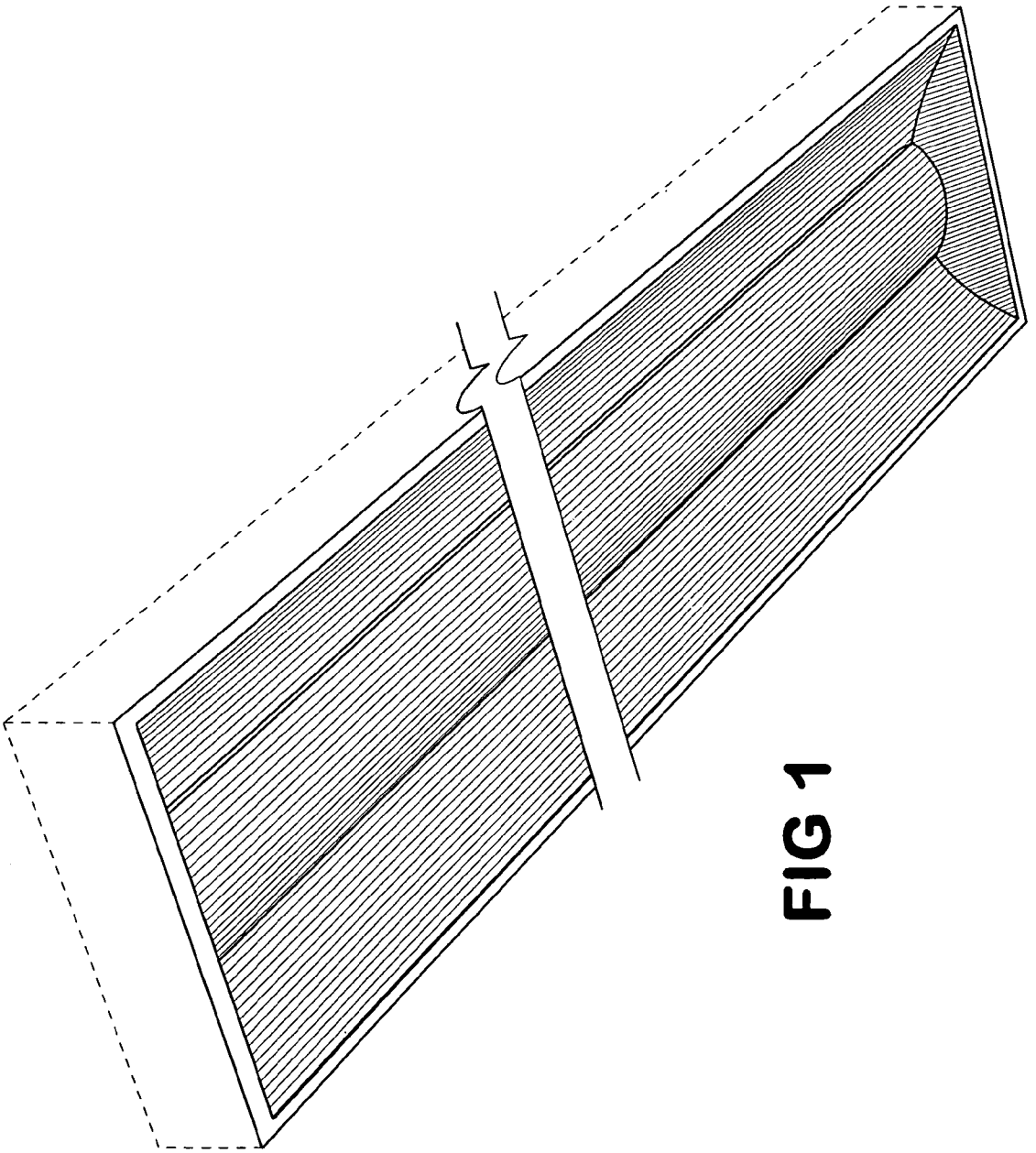

FIG 1

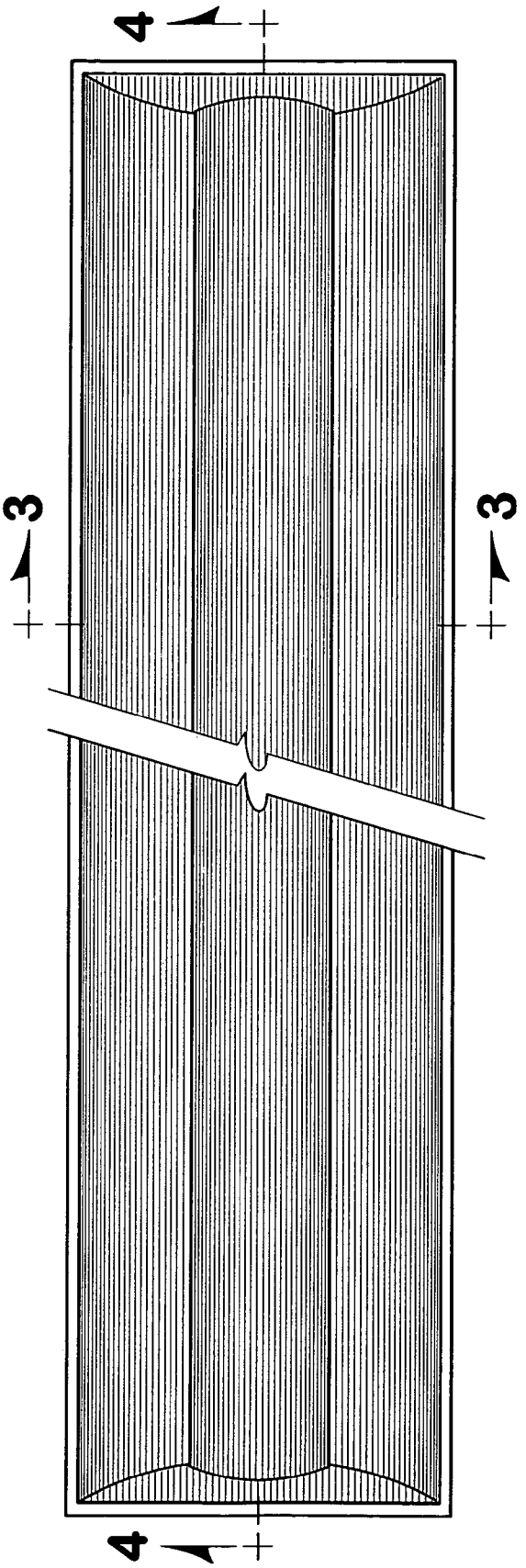

FIG 2

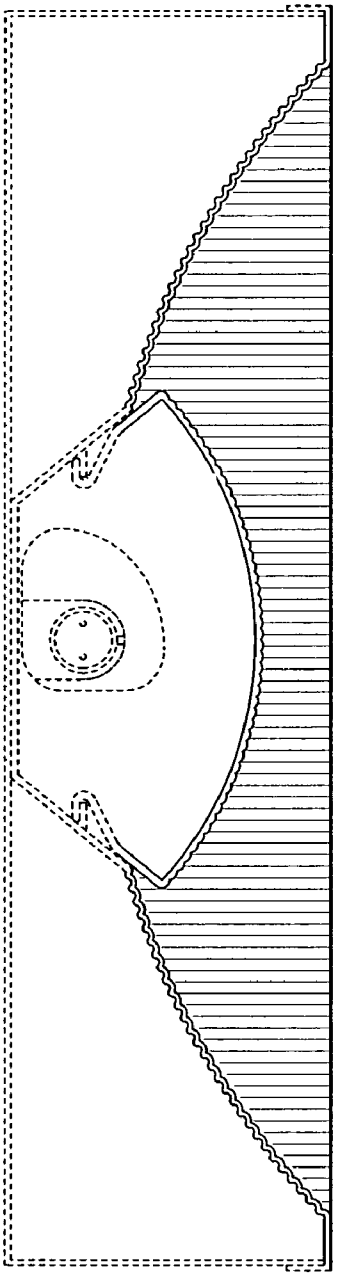

FIG 3

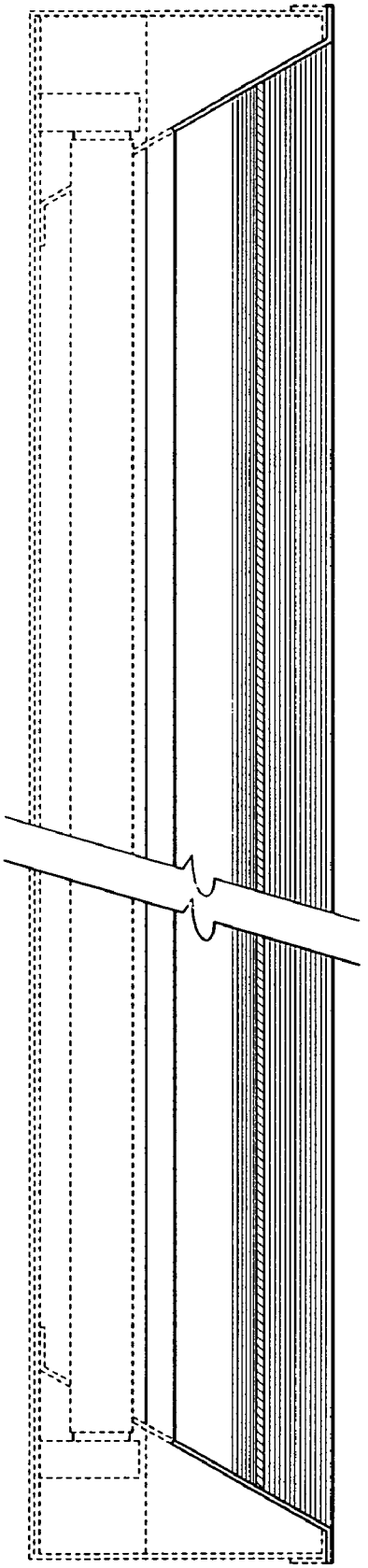

FIG 4

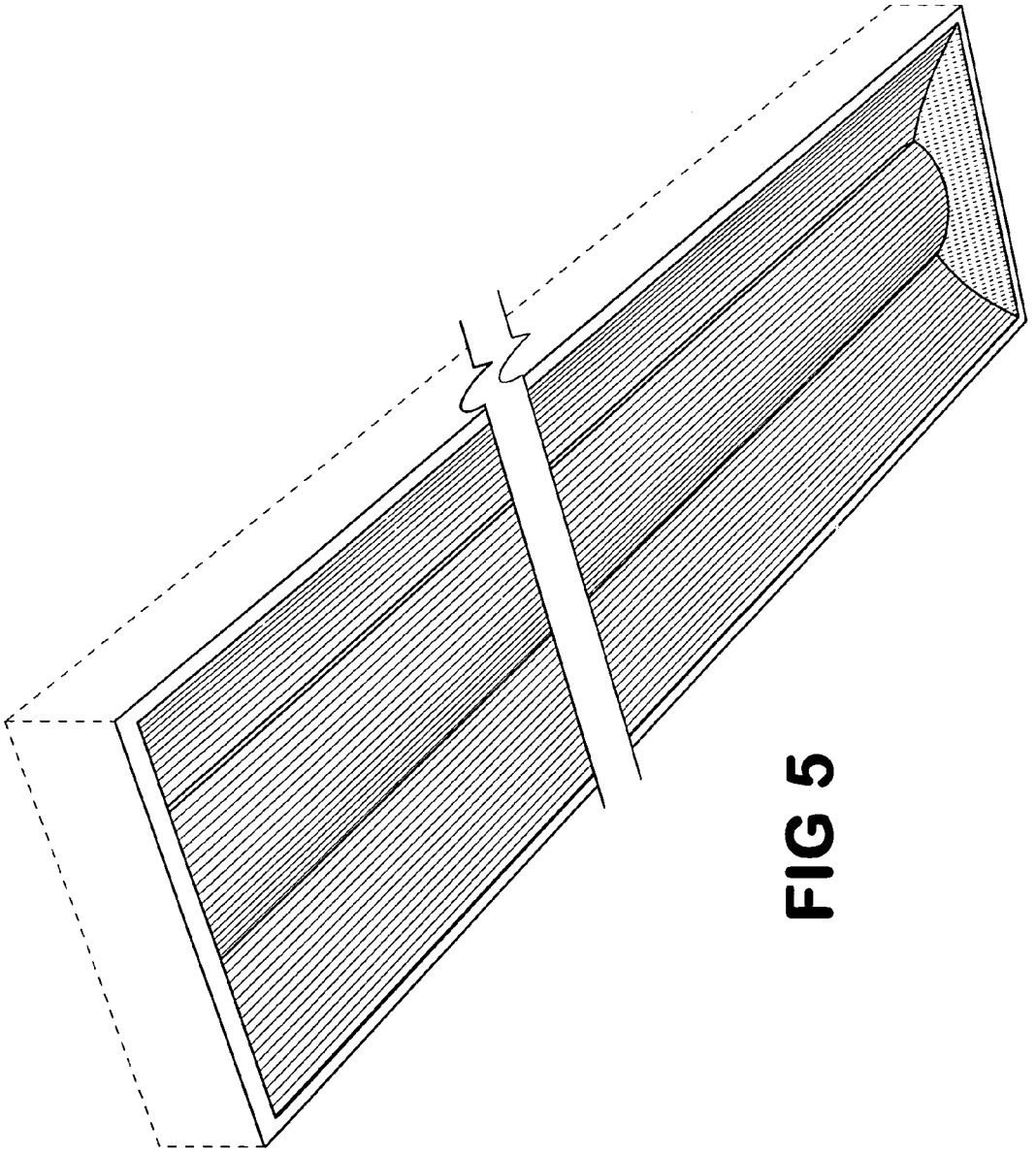

FIG 5

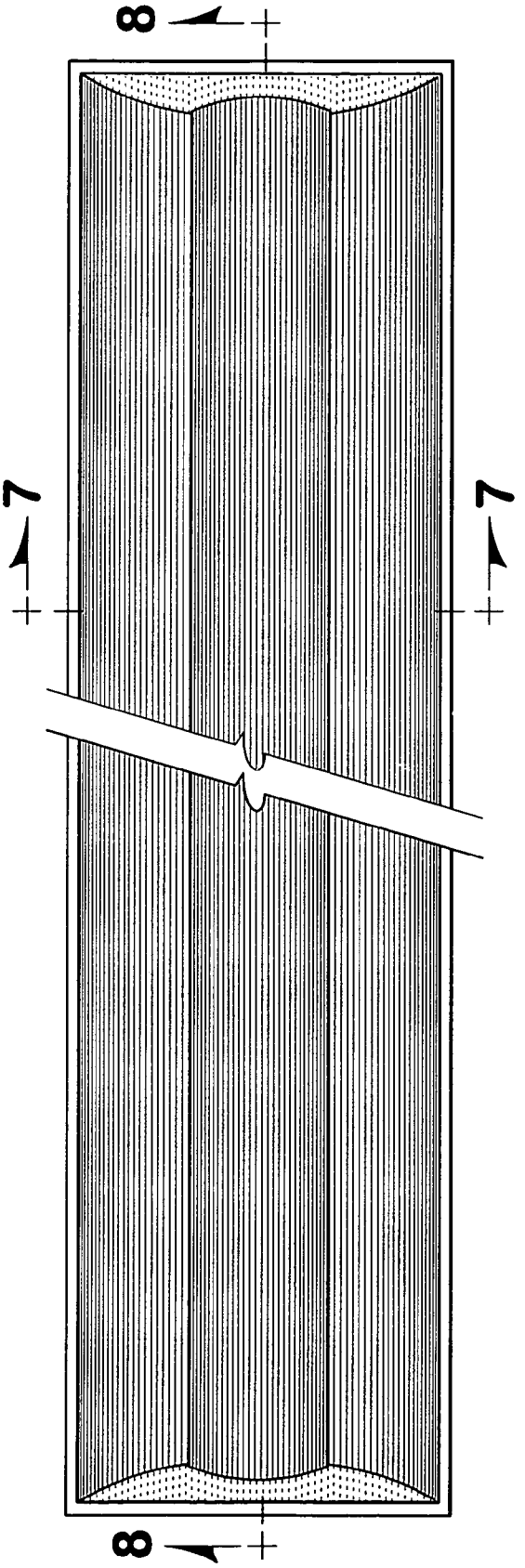

FIG 6

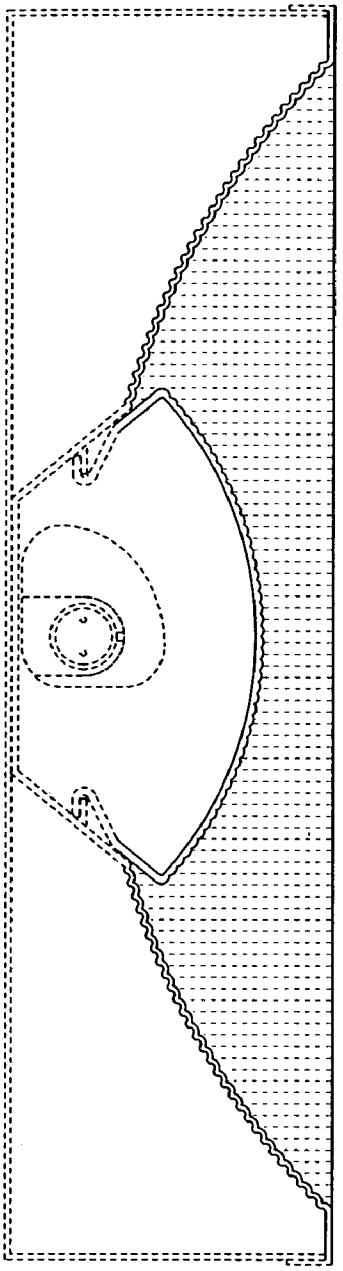

FIG 7

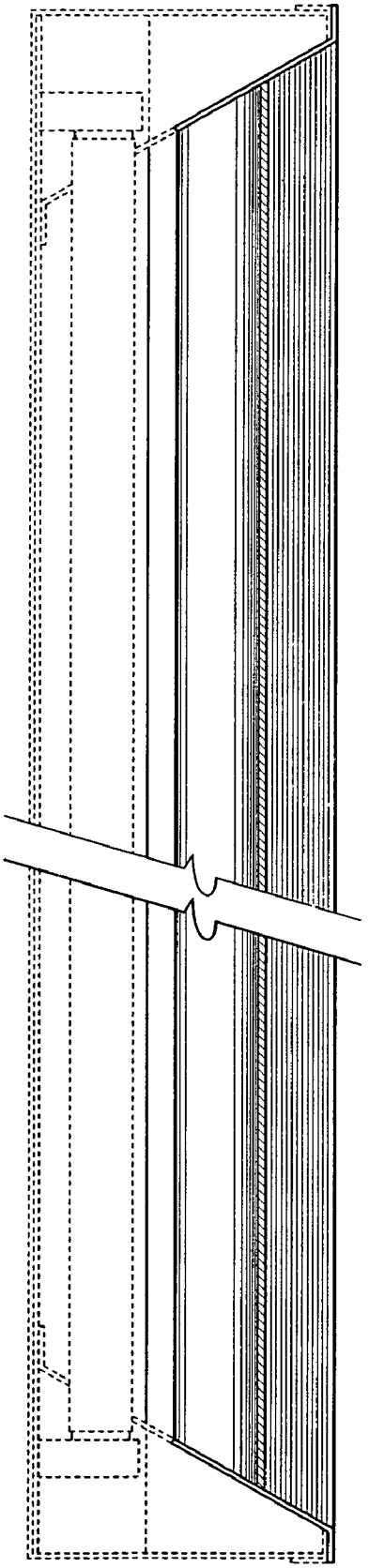

FIG 8

EXHIBIT L

US00D545993S

(12) United States Design Patent

Mayfield, III et al.

(10) Patent No.: US D545,993 S
(45) Date of Patent: ** Jul. 3, 2007

(54) **LIGHT FIXTURE**

(75) Inventors: **John T. Mayfield, III**, Loganville, GA (US); **Carl T. Gould**, Boulder, CO (US); **Kevin Leadford**, Evergreen, CO (US); **Stephen H. Lydecker**, Snellville, GA (US)

(73) Assignee: **Acuity Brands, Inc.**, Atlanta, GA (US)

(**) Term: **14 Years**

(21) Appl. No.: **29/215,591**

(22) Filed: **Oct. 21, 2004**

(51) **LOC (8) Cl.** **26-99**
(52) **U.S. Cl.** **D26/118**
(58) **Field of Classification Search** D26/118, D26/76, 75, 152, 138, 77, 121, 74, 142, 128, D26/113, 119, 120, 122; 362/223, 263, 225, 362/339, 404, 219, 217, 364, 291, 328, 257, 362/260, 317, 326, 330, 341
See application file for complete search history.

(56) **References Cited**

U.S. PATENT DOCUMENTS

D85,382	S	*	10/1931	Guth	D26/24
1,888,103	A	*	11/1932	Guth	362/348
D125,001	S	*	2/1941	Klingsick	D26/78
D132,296	S	*	5/1942	Hoeveler	D26/122
D132,786	S	*	6/1942	Netting	D26/78
2,323,073	A	*	6/1943	Netting	362/225
2,339,100	A	*	1/1944	Netting	362/219
D156,743	S	*	1/1950	Kennedy	D26/59
2,852,663	A		9/1958	Stuffer et al.	240/51.11
3,125,301	A	*	3/1964	Stotter	362/217
3,265,887	A		8/1966	Wince	
3,270,194	A	*	8/1966	Lee	362/218
3,838,268	A		9/1974	Fabbri	240/9
3,860,903	A	*	1/1975	Van Steenhoven	362/279
4,499,529	A	*	2/1985	Figueroa	362/283
D284,110	S	*	6/1986	Mullins	D26/76
4,622,624	A	*	11/1986	McCarthy et al.	362/217
4,698,734	A		10/1987	Ngai	362/225
4,799,136	A		1/1989	Molnar	362/300

(Continued)

OTHER PUBLICATIONS

Lithonia Lighting, an Acuity Brands Company, Product Selection Guide, 8th ed. p. 14-93, 112-115.

(Continued)

Primary Examiner—Freda S. Nunn
Assistant Examiner—Kevin K. Rudzinski
(74) *Attorney, Agent, or Firm*—Needle & Rosenberg, P.C.

(57) **CLAIM**

The ornamental design for a light fixture, as shown and described.

DESCRIPTION

FIG. **1** is a perspective view of a light fixture of the present invention;

FIG. **2** is a bottom plan view of the light fixture of FIG. **1**;

FIG. **3** is a cross-sectional view of the light fixture of FIG. **1** taken along line **3-3** in FIG. **2**;

FIG. **4** is a cross-sectional view of the light fixture of FIG. **1** taken along line **4-4** in FIG. **2**;

FIG. **5** is a perspective view of a second embodiment of the light fixture of the present invention;

FIG. **6** is a bottom plan view of the light fixture of FIG. **5**;

FIG. **7** is a cross-sectional view of the light fixture of FIG. **5** taken along line **7-7** in FIG. **6**; and,

FIG. **8** is a cross-sectional view of the light fixture of FIG. **5** taken along line **8-8** in FIG. **6**.

The broken lines are shown for illustrative purposes only and form no part of the claimed design.

The top of the light fixture is unornamented and forms no part of the design.

1 Claim, 8 Drawing Sheets

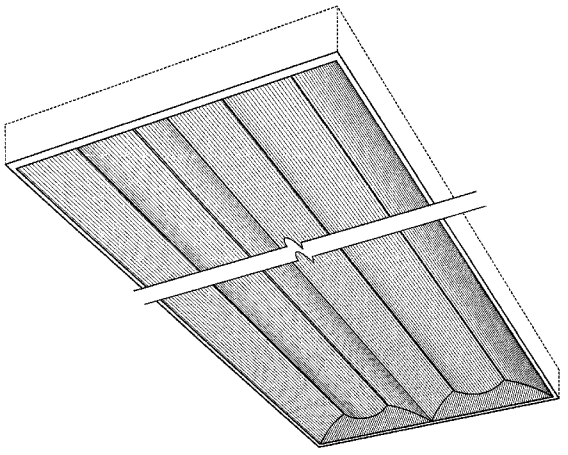

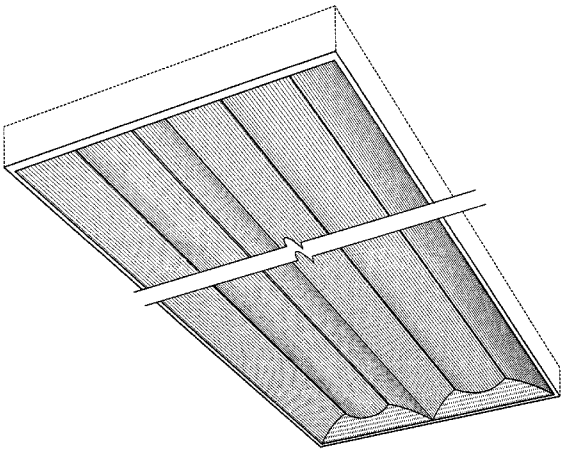

U.S. PATENT DOCUMENTS

D300,873	S	*	4/1989	Thompson et al.	D26/74
5,062,030	A	*	10/1991	Figueroa	362/346
5,192,129	A	*	3/1993	Figueroa	362/346
D348,950	S	*	7/1994	Herst et al.	D26/85
D351,481	S	*	10/1994	Cole, Jr.	D26/76
5,555,162	A	*	9/1996	Shemitz	362/225
5,570,947	A	*	11/1996	Felland	362/148
5,746,502	A		5/1998	Huang	362/223
D397,819	S		9/1998	Thorton, Jr.	D26/77
D399,586	S	*	10/1998	Ranieri et al.	D26/74
D407,473	S	*	3/1999	Wimbock	D23/328
D411,641	S	*	6/1999	Ranieri et al.	D26/74
D413,402	S	*	8/1999	Ranieri et al.	D26/74
5,971,571	A		10/1999	Rose	362/346
5,988,829	A		11/1999	Holder	362/217
5,988,836	A		11/1999	Swarens	362/364
6,102,550	A		8/2000	Edwards, Jr.	362/221
D440,341	S		4/2001	Arumugasaamy	D26/85
6,238,065	B1		5/2001	Jones	362/339
6,280,052	B1		8/2001	White	362/225
6,419,375	B1		7/2002	Leadford et al.	362/297
D461,267	S		8/2002	Arumugasaamy	D26/85
6,454,442	B1		9/2002	Changaris	362/297
6,485,166	B1		11/2002	Fouke	362/340
D467,676	S		12/2002	Packer et al.	D26/72
D467,677	S		12/2002	Ries et al.	D26/88
6,505,953	B1		1/2003	Dahlen	362/217
6,505,959	B2		1/2003	Masaki et al.	362/339
6,530,681	B2		3/2003	Sieczkowski	362/404
6,537,549	B2		3/2003	Martin et al.	428/172
D472,665	S		4/2003	Herst et al.	D26/113
D472,666	S		4/2003	Herst et al.	D26/113
D472,667	S		4/2003	Herst et al.	D26/113
D472,668	S		4/2003	Herst et al.	D26/113
D473,007	S		4/2003	Herst et al.	D26/113
D473,335	S		4/2003	Bohard et al.	D26/113
6,540,382	B1		4/2003	Simon	362/339
D477,891	S		7/2003	Fritze et al.	D26/74
D480,168	S		9/2003	Herst et al.	D26/77
D480,172	S		9/2003	Herst et al.	D26/121
6,612,718	B1		9/2003	Packer et al.	362/267
6,612,723	B2		9/2003	Futhey et al.	362/339
D480,500	S		10/2003	Herst et al.	D26/121
D480,501	S		10/2003	Herst et al.	D26/121
D480,502	S		10/2003	Herst et al.	D26/121
D480,503	S		10/2003	Herst et al.	D26/121
D480,530	S		10/2003	Herst et al.	121/77
D480,830	S		10/2003	Sieczkowski	D26/118
D481,488	S		10/2003	Herst et al.	D26/121
D481,489	S		10/2003	Cline et al.	D26/128
6,637,912	B2		10/2003	Arumugasaamy et al.	362/327
D481,820	S		11/2003	Watt	D26/77
6,652,118	B2		11/2003	Shemitz et al.	362/225
D483,510	S		12/2003	Fritze et al.	D26/75
6,655,819	B2		12/2003	Loga et al.	362/263
D485,932	S		1/2004	Crane	D26/76
D487,527	S		3/2004	Sieczkowski	D26/76
6,709,131	B1		3/2004	Herst et al.	362/223
6,726,345	B2		4/2004	Arumugasaamy et al.	362/327
D496,121	S	*	9/2004	Santoro	D26/74
2002/0080615	A1		6/2002	Marshall et al.	362/333

OTHER PUBLICATIONS

Lithonia Lighting, an Acuity Brands Company, Direct/Indirect Lighting, pp. 1-15 (2002).
Lithonia Lighting, an Acuity Brands Company, Avante Recessed Direct/Indirect Lighting, pp. 1-3 (1997).
Lithonia Lighting, an Acuity Brands Company, Architectural Fluorescent Recessed Direct/Indirect Lighting, pp. 1-13 (1999).
Genlyte/Thomas, Lightolier, Alter Soft Lights, pp. 1-67 (2003).
Cooper Lighting, Metalux, p. 1-8 (1999).
Columbia Lighting, Stratus, pp. 1-9 (1998).
Focal Point, Luna, pp. 1-5 (1997).
Lithonia Lighting, an Acuity Brands Company, Product Selection Guide, 8th Edition, pp. 1-620 (2003).
Peerless-Lighting, Parallels, pp. 1-2 (2005).
Lithonia Lighting, an Acuity Brands Company, Avante, Recessed Direct/Indirect Lighting, pp. 1-4 (1996).
Lithonia Lighting, an Acuity Brands Company, Avante, Direct/Indirect General Lighting System, pp. 1-2 (1995).
Lightolier, CFI Fluorescent, Alter Soft Lights, 1-8 (1996).
Alter, pp. 1-6 (1994).

* cited by examiner

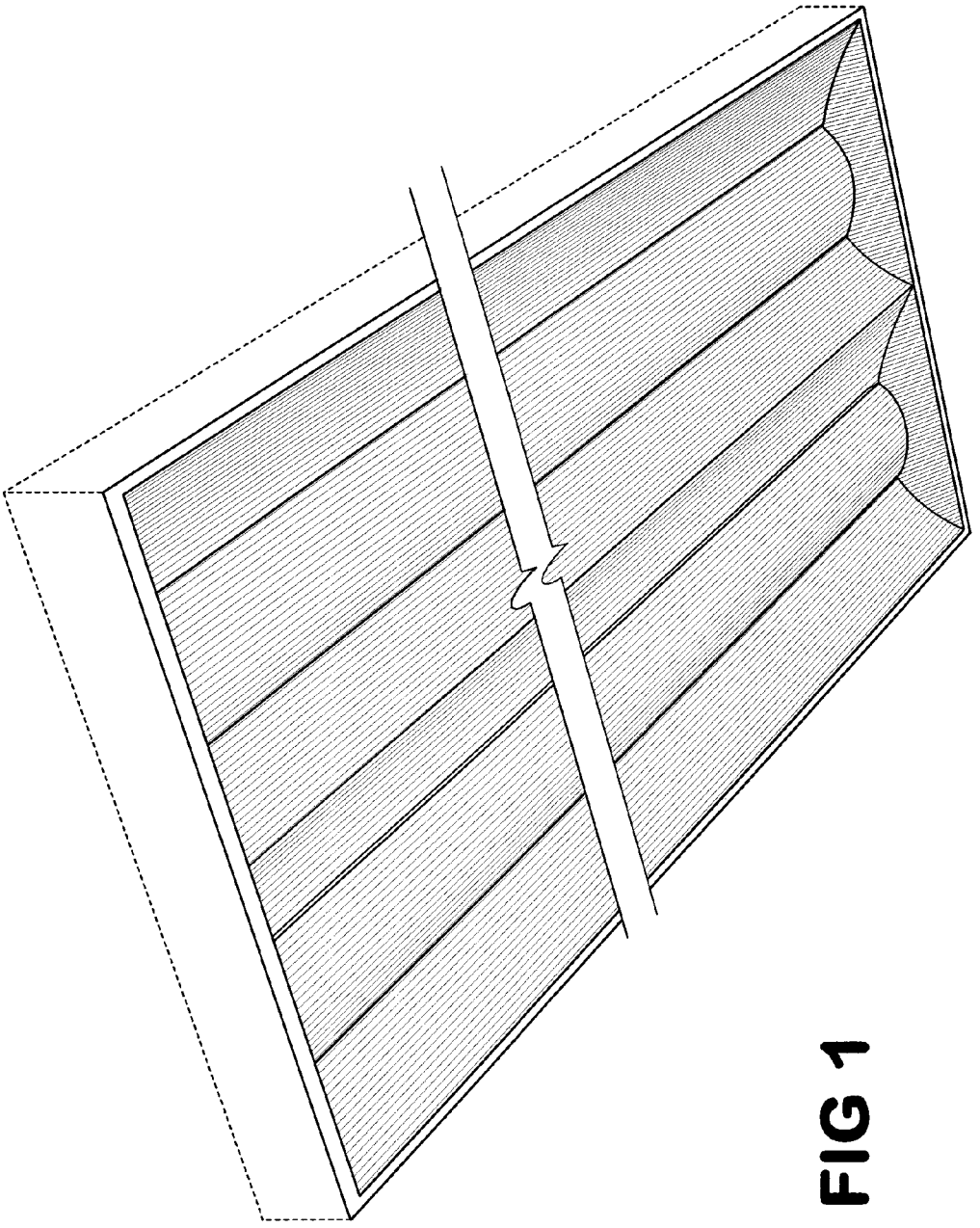

FIG 1

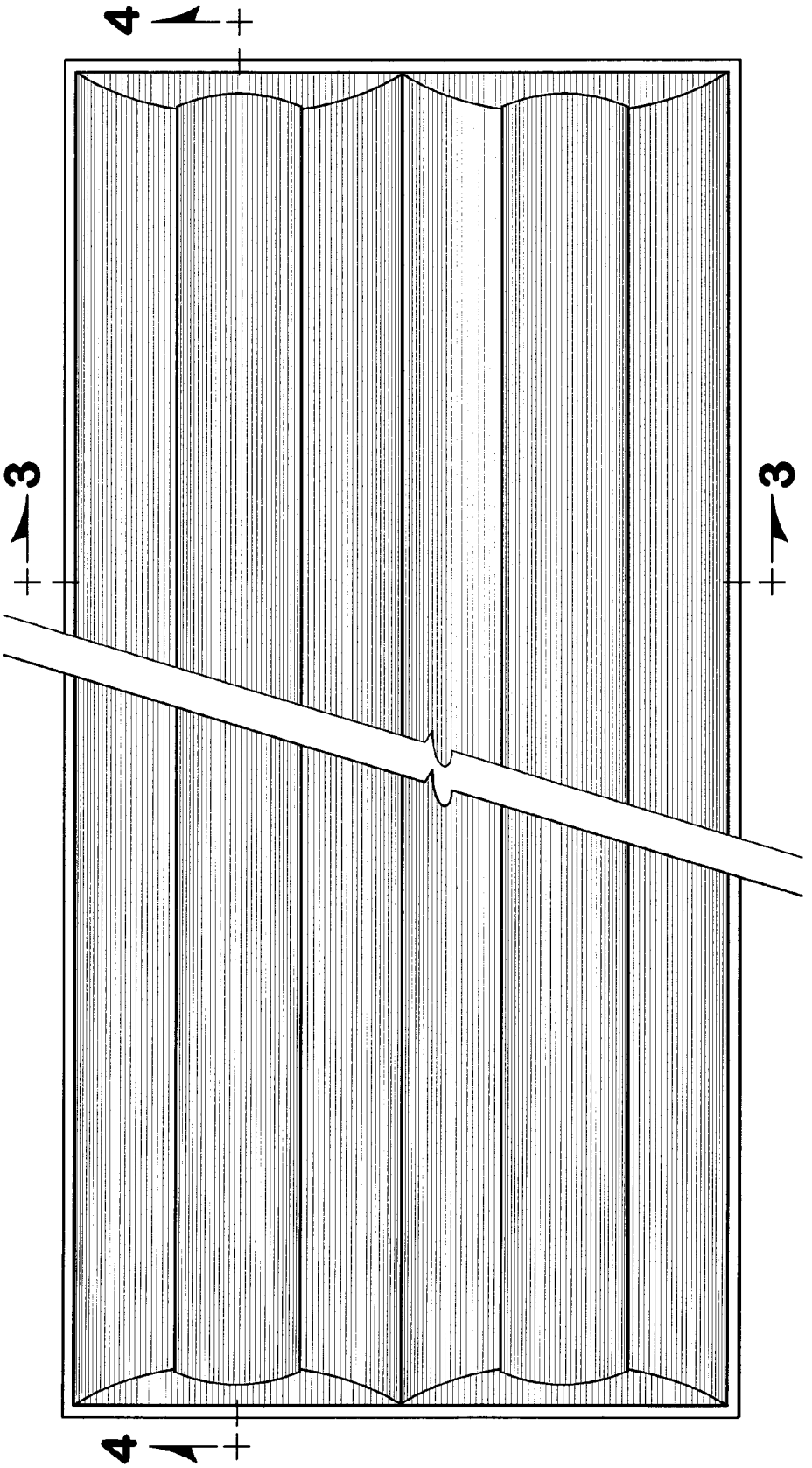

FIG 2

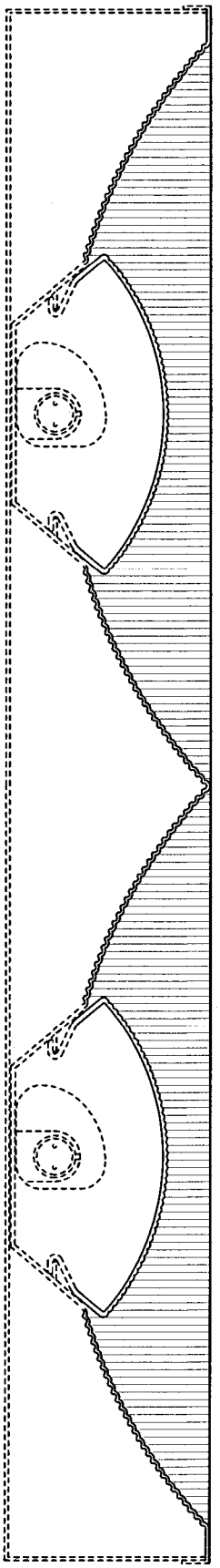

FIG 3

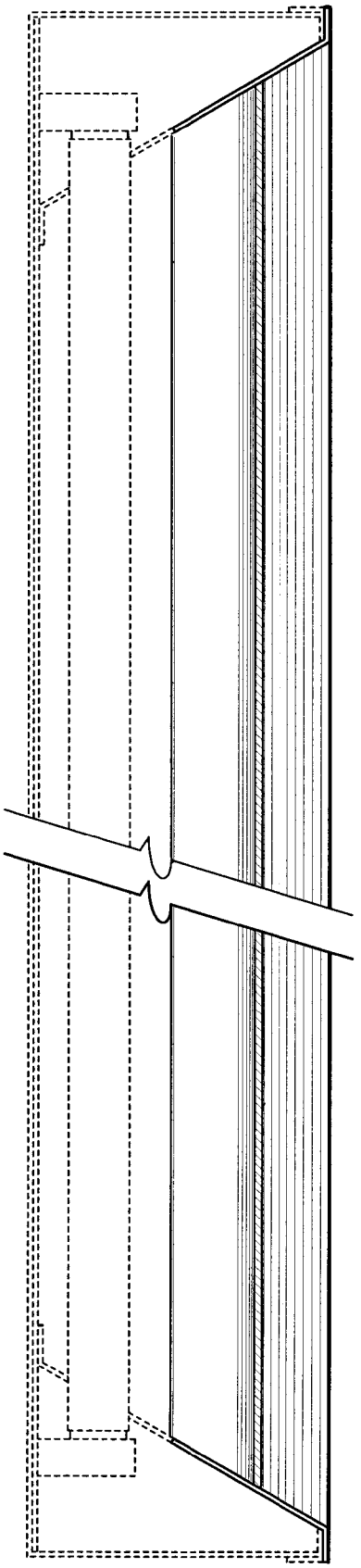

FIG 4

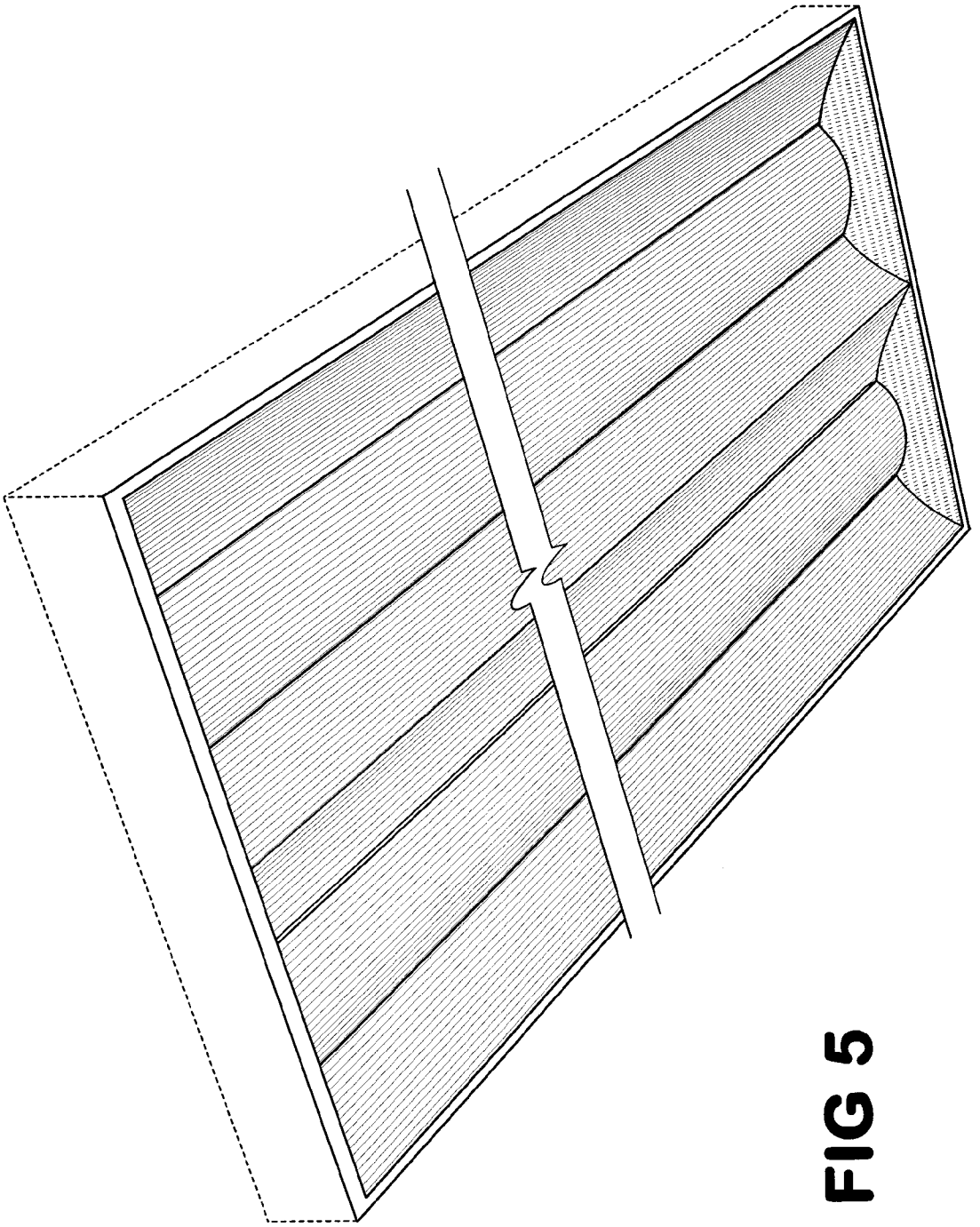

FIG 5

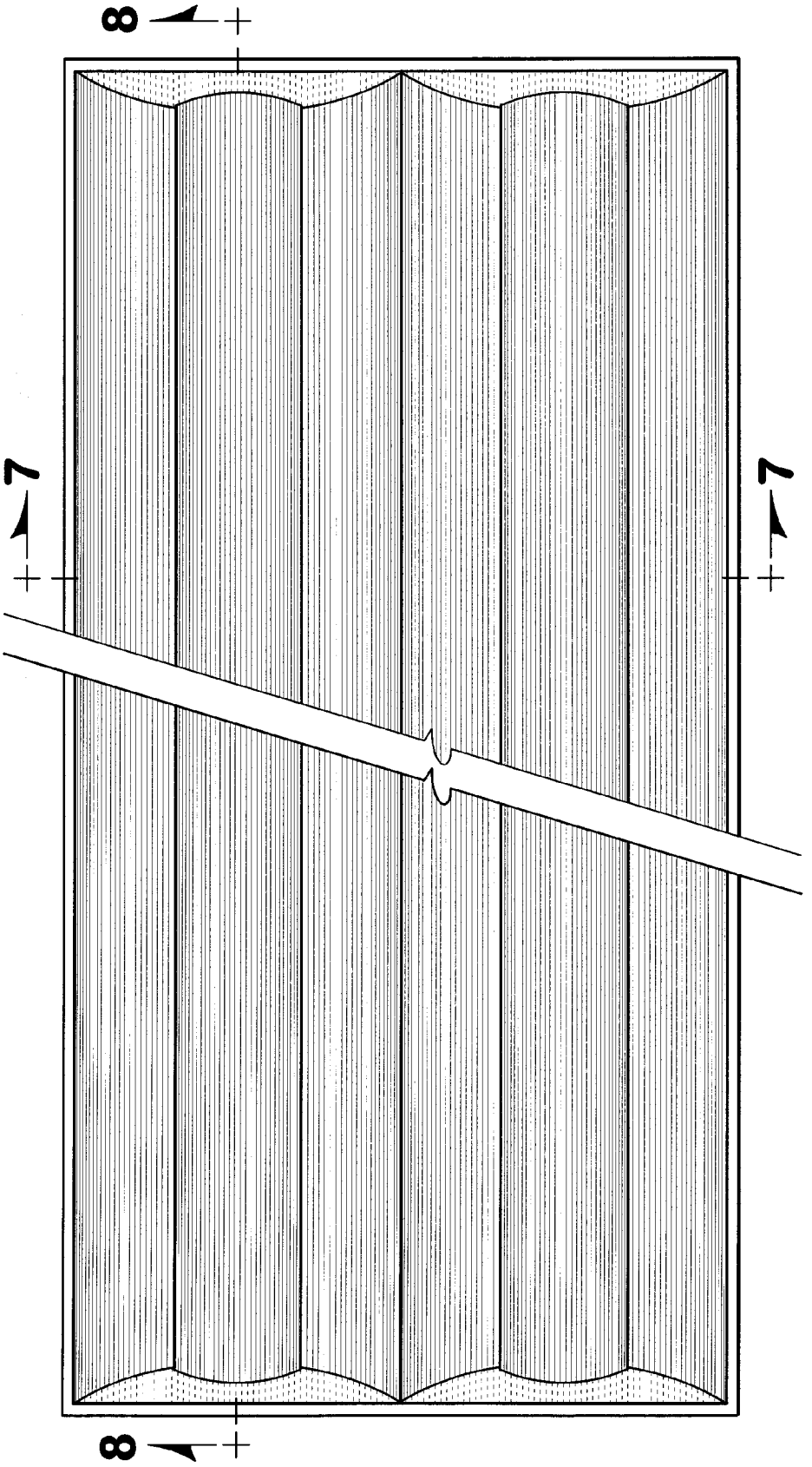

FIG 6

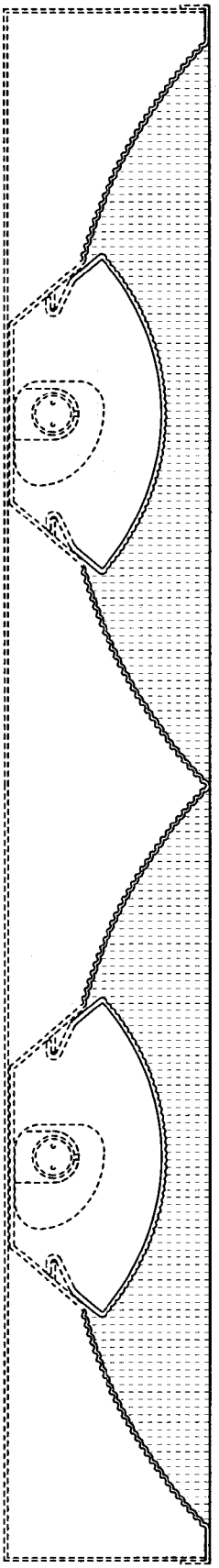

FIG 7

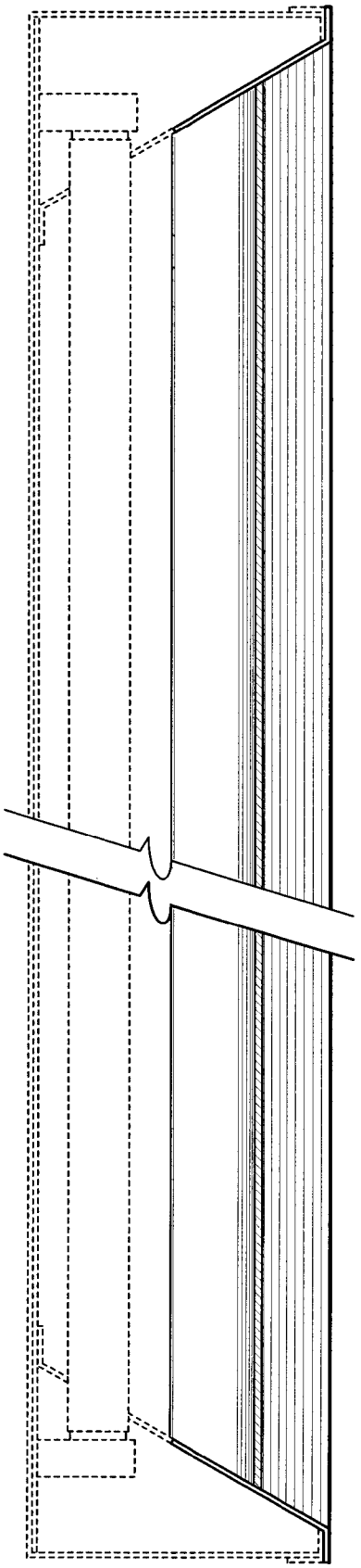

FIG 8

JS 44 (Rev. 11/04)

CIVIL COVER SHEET

The JS 44 civil cover sheet and the information contained herein neither replace nor supplement the filing and service of pleadings or other papers as required by law, except as provided by local rules of court. This form, approved by the Judicial Conference of the United States in September 1974, is required for the use of the Clerk of Court for the purpose of initiating the civil docket sheet. (SEE INSTRUCTIONS ON THE REVERSE OF THE FORM.)

I. (a) PLAINTIFFS
Acuity Brands, Inc. and
Acuity Brands Lighting, Inc.

DEFENDANTS
Cooper Industries, Inc. and
Cooper Lighting, Inc.

(b) County of Residence of First Listed Plaintiff _____
(EXCEPT IN U.S. PLAINTIFF CASES)

County of Residence of First Listed Defendant _____
(IN U.S. PLAINTIFF CASES ONLY)
NOTE: IN LAND CONDEMNATION CASES, USE THE LOCATION OF THE LAND INVOLVED.

(c) Attorney's (Firm Name, Address, and Telephone Number)
Jack B. Blumenfeld, Rodger D. Smith II, Leslie A. Polizoti
MORRIS, NICHOLS, ARSHT & TUNNELL LLP, 1201 North Market Street,
P.O. Box 1347, Wilmington, DE 19899-1347, (302) 658-9200

Attorneys (If Known)

II. BASIS OF JURISDICTION (Place an "X" in One Box Only)

- ☐ 1 U.S. Government Plaintiff
- ☒ 3 Federal Question (U.S. Government Not a Party)
- ☐ 2 U.S. Government Defendant
- ☐ 4 Diversity (Indicate Citizenship of Parties in Item III)

III. CITIZENSHIP OF PRINCIPAL PARTIES (Place an "X" in One Box for Plaintiff and One Box for Defendant)
(For Diversity Cases Only)

	PTF	DEF		PTF	DEF
Citizen of This State	☐ 1	☐ 1	Incorporated *or* Principal Place of Business In This State	☐ 4	☐ 4
Citizen of Another State	☐ 2	☐ 2	Incorporated *and* Principal Place of Business In Another State	☐ 5	☐ 5
Citizen or Subject of a Foreign Country	☐ 3	☐ 3	Foreign Nation	☐ 6	☐ 6

IV. NATURE OF SUIT (Place an "X" in One Box Only)

CONTRACT
- ☐ 110 Insurance
- ☐ 120 Marine
- ☐ 130 Miller Act
- ☐ 140 Negotiable Instrument
- ☐ 150 Recovery of Overpayment & Enforcement of Judgment
- ☐ 151 Medicare Act
- ☐ 152 Recovery of Defaulted Student Loans (Excl. Veterans)
- ☐ 153 Recovery of Overpayment of Veteran's Benefits
- ☐ 160 Stockholders' Suits
- ☐ 190 Other Contract
- ☐ 195 Contract Product Liability
- ☐ 196 Franchise

REAL PROPERTY
- ☐ 210 Land Condemnation
- ☐ 220 Foreclosure
- ☐ 230 Rent Lease & Ejectment
- ☐ 240 Torts to Land
- ☐ 245 Tort Product Liability
- ☐ 290 All Other Real Property

TORTS

PERSONAL INJURY
- ☐ 310 Airplane
- ☐ 315 Airplane Product Liability
- ☐ 320 Assault, Libel & Slander
- ☐ 330 Federal Employers' Liability
- ☐ 340 Marine
- ☐ 345 Marine Product Liability
- ☐ 350 Motor Vehicle
- ☐ 355 Motor Vehicle Product Liability
- ☐ 360 Other Personal Injury

PERSONAL INJURY
- ☐ 362 Personal Injury - Med. Malpractice
- ☐ 365 Personal Injury - Product Liability
- ☐ 368 Asbestos Personal Injury Product Liability

PERSONAL PROPERTY
- ☐ 370 Other Fraud
- ☐ 371 Truth in Lending
- ☐ 380 Other Personal Property Damage
- ☐ 385 Property Damage Product Liability

CIVIL RIGHTS
- ☐ 441 Voting
- ☐ 442 Employment
- ☐ 443 Housing/ Accommodations
- ☐ 444 Welfare
- ☐ 445 Amer. w/Disabilities - Employment
- ☐ 446 Amer. w/Disabilities - Other
- ☐ 440 Other Civil Rights

PRISONER PETITIONS
- ☐ 510 Motions to Vacate Sentence

Habeas Corpus:
- ☐ 530 General
- ☐ 535 Death Penalty
- ☐ 540 Mandamus & Other
- ☐ 550 Civil Rights
- ☐ 555 Prison Condition

FORFEITURE/PENALTY
- ☐ 610 Agriculture
- ☐ 620 Other Food & Drug
- ☐ 625 Drug Related Seizure of Property 21 USC 881
- ☐ 630 Liquor Laws
- ☐ 640 R.R. & Truck
- ☐ 650 Airline Regs.
- ☐ 660 Occupational Safety/Health
- ☐ 690 Other

LABOR
- ☐ 710 Fair Labor Standards Act
- ☐ 720 Labor/Mgmt. Relations
- ☐ 730 Labor/Mgmt.Reporting & Disclosure Act
- ☐ 740 Railway Labor Act
- ☐ 790 Other Labor Litigation
- ☐ 791 Empl. Ret. Inc. Security Act

BANKRUPTCY
- ☐ 422 Appeal 28 USC 158
- ☐ 423 Withdrawal 28 USC 157

PROPERTY RIGHTS
- ☐ 820 Copyrights
- ☒ 830 Patent
- ☐ 840 Trademark

SOCIAL SECURITY
- ☐ 861 HIA (1395ff)
- ☐ 862 Black Lung (923)
- ☐ 863 DIWC/DIWW (405(g))
- ☐ 864 SSID Title XVI
- ☐ 865 RSI (405(g))

FEDERAL TAX SUITS
- ☐ 870 Taxes (U.S. Plaintiff or Defendant)
- ☐ 871 IRS---Third Party 26 USC 7609

OTHER STATUTES
- ☐ 400 State Reapportionment
- ☐ 410 Antitrust
- ☐ 430 Banks and Banking
- ☐ 450 Commerce
- ☐ 460 Deportation
- ☐ 470 Racketeer Influenced and Corrupt Organizations
- ☐ 480 Consumer Credit
- ☐ 490 Cable/Sat TV
- ☐ 810 Selective Service
- ☐ 850 Securities/Commodities/ Exchange
- ☐ 875 Customer Challenge 12 USC 3410
- ☐ 890 Other Statutory Actions
- ☐ 891 Agricultural Acts
- ☐ 892 Economic Stabilization Act
- ☐ 893 Environmental Matters
- ☐ 894 Energy Allocation Act
- ☐ 895 Freedom of Information Act
- ☐ 900Appeal of Fee Determination Under Equal Access to Justice
- ☐ 950 Constitutionality of State Statutes

V. ORIGIN (Place an "X" in One Box Only)

☒ 1 Original Proceeding ☐ 2 Removed from State Court ☐ 3 Remanded from Appellate Court ☐ 4 Reinstated or Reopened ☐ 5 Transferred from another district (specify) ☐ 6 Multidistrict Litigation ☐ 7 Appeal to District Judge from Magistrate Judgment

VI. CAUSE OF ACTION

Cite the U.S. Civil Statute under which you are filing **(Do not cite jurisdictional statutes unless diversity)**: 35 U.S.C. Section 271

Brief description of cause: Patent infringement action

VII. REQUESTED IN COMPLAINT:

☐ CHECK IF THIS IS A **CLASS ACTION** UNDER F.R.C.P. 23

DEMAND $

CHECK YES only if demanded in complaint:
JURY DEMAND: ☒ Yes ☐ No

VIII. RELATED CASE(S) IF ANY

(See instructions): JUDGE _____ DOCKET NUMBER _____

DATE 7/17/07

SIGNATURE OF ATTORNEY OF RECORD

FOR OFFICE USE ONLY

RECEIPT # _____ AMOUNT _____ APPLYING IFP _____ JUDGE _____ MAG. JUDGE _____

AO FORM 85 RECEIPT (REV. 9/04)

United States District Court for the District of Delaware

Civil Action No. 07-444

ACKNOWLEDGMENT OF RECEIPT FOR AO FORM 85

NOTICE OF AVAILABILITY OF A UNITED STATES MAGISTRATE JUDGE TO EXERCISE JURISDICTION

I HEREBY ACKNOWLEDGE RECEIPT OF 2 COPIES OF AO FORM 85.

JUL 17 2007
(Date forms issued)

(Signature of Party or their Representative)

Scott Barber
(Printed name of Party or their Representative)

Note: Completed receipt will be filed in the Civil Action