IN THE UNITED STATES DISTRICT COURT
FOR THE DISTRICT OF DELAWARE

RATES TECHNOLOGY INC., Plaintiff, v. PRIMUS TELECOMMUNICATIONS, INC. and PRIMUS TELECOMMUNICATIONS GROUP, INCORPORATED, Defendants.	Civil Action No. 07-441 JJF

DECLARATION OF JAMES M. DOWD

I, James M. Dowd, hereby depose and state the following:

1. I am an attorney licensed to practice law in the Commonwealth of Virginia and District of Columbia. I am counsel for Primus Telecommunications, Inc. and Primus Telecommunications Group, Incorporated, defendants in this civil action, and have personal knowledge of the following facts about which I can competently testify.

2. Attached hereto as Exhibit A is a true and accurate copy of United States Patent No. 5,425,085 (the "'085 patent").

3. Attached hereto as Exhibit B is a true and accurate copy of United States Patent No. 5,519,769 (the "'769 patent").

4. Attached hereto as Exhibit C is a true and accurate copy of the Letter from Gerald J. Weinberger to K. Paul Singh and John F. DePodesta, dated January 31, 2007.

5. Attached hereto as Exhibit D is a true and accurate copy of the Letter from Gerald J. Weinberger to K. Paul Singh and John F. DePodesta, dated February 27, 2007.

6. Attached hereto as Exhibit E is a true and accurate copy of the Letter from John F. DePodesta to Gerald J. Weinberger, dated April 23, 2007.

7. Attached hereto as Exhibit F is a true and accurate copy of the Letter from Gerald J. Weinberger to John F. DePodesta, dated April 26, 2007.

8. Attached hereto as Exhibit G is a true and accurate copy of *Mediacom Corp. v. Rates Tech. Inc.*, 4 F. Supp. 2d 17 (D. Mass. 1998), and the Civil Docket for Case No. 1:97cv10559.

9. Attached hereto as Exhibit H is a true and accurate copy of *OpenLCR.com, Inc. v. Rates Tech Inc* , 112 F. Supp. 2d 1223 (D. Col. 2000).

10. Attached hereto as Exhibit I is a true and accurate copy of pertinent Orders in *Alcatel Internetworking, Inc., et al. v. Rates Tech. Inc.*, C.D. Cal. C.A. 2:03cv09449.

11. Attached hereto as Exhibit J is a true and accurate copy of pertinent Orders in *Rates Tech. Inc. v. Cablevision Sys. Corp.*, E.D.N.Y. C.A. 2:05cv03583.

12. Attached hereto as Exhibit K is a true and accurate copy of the '085 patent re-examination proceedings currently pending before the United States Patent and Trademark Office.

13. Attached hereto as Exhibit L is a true and accurate copy of pertinent portions of the '769 File History, Amendment dated October 27, 1994.

14. Attached hereto as Exhibit M is a true and accurate copy of the E-mail from Gerald J. Weinberger to John F. DePodesta, dated August 23, 2007.

SIGNED AND SWORN UNDER THE PAINS AND PENALTIES OF PERJURY THIS 19th DAY OF SEPTEMBER 2007.

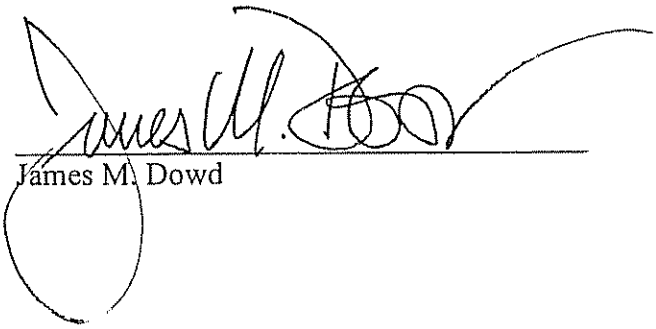

James M. Dowd

CERTIFICATE OF SERVICE

I hereby certify that on September 19, 2007, I electronically filed the foregoing with the Clerk of Court using CM/ECF which will send notification of such filing(s) to the following and which has also been served as noted:

BY HAND

Mary Matterer
Morris James LLP
500 Delaware Avenue, Suite 1500
P. O. Box 2306
Wilmington, DE 19899-2306

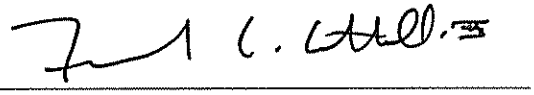

Frederick L. Cottrell, III (#2555)
cottrell@rlf.com

Exhibit A

Civil Action No. 07-441 JJF

US005425085A

United States Patent [19]

Weinberger et al.

[11] Patent Number: 5,425,085

[45] Date of Patent: Jun. 13, 1995

[54] **LEAST COST ROUTING DEVICE FOR SEPARATE CONNECTION INTO PHONE LINE**

[75] Inventors: **Gerald J. Weinberger**, Smithtown; **Roger C. Lee**, Wading River, both of N.Y.

[73] Assignee: **Rates Technology Inc.**, Smithtown, N.Y.

[21] Appl. No.: **210,670**

[22] Filed: **Mar. 18, 1994**

[51] **Int. Cl.**[6] **H04M 15/00**; H04M 7/00

[52] **U.S. Cl.** **379/112**; 379/111; 379/113; 379/114; 379/116; 379/130; 379/131; 379/219; 379/220; 379/221

[58] **Field of Search** 379/111–116, 379/130–132, 219–221

[56] **References Cited**

U.S. PATENT DOCUMENTS

4,122,308	10/1978	Weinberger et al.	379/112
4,136,262	1/1979	Clark, Jr.	379/143
4,198,545	4/1980	Haist et al.	379/113
4,209,668	6/1980	Weinberger et al.	379/114
4,410,765	10/1983	Hestad	379/112
4,585,904	4/1986	Mincone	379/131
4,656,657	4/1987	Hunsicker	379/131
4,751,729	6/1988	Treat	379/113
4,813,065	3/1989	Segala	379/112
4,888,822	12/1989	Weinberger et al.	379/130
4,935,956	6/1990	Hellwarth	379/114
5,163,042	11/1992	Ochiai	379/220

Primary Examiner—Stephen Chin
Assistant Examiner—Vijay Shankar
Attorney, Agent, or Firm—James & Franklin; Harold James; Robert L. Epstein

[57] **ABSTRACT**

A device interconnects within the phone line coming from a first phone and routes telephone calls along a least cost route originating from the first telephone to a second telephone via the network. A housing forms an enclosure and has a first jack for interconnection to the phone side of the phone line and a second jack for interconnection to the network side of the phone line. The housing forms an enclosure which includes a switch for disconnecting the first phone from the network. The device generates a source of current through the switch to the first phone corresponding to the amount of current provided by the phone network. A database stores billing rate parameters for determining various communication paths of different carriers based on parameters such as the time and date of the call. Phone calls from the first phone are detected and stored. The database is addressed and a plurality of communication switch paths are identified as well as the cost rate of each path. The cost rates for each identified path are compared to determine a least cost route for the call. The device generates a number sequence corresponding to a desired carrier so that the dialed call is routed through the second jack and phone line to the selected communication path and carrier so as to establish a switched connection between the first and second phones.

26 Claims, 6 Drawing Sheets

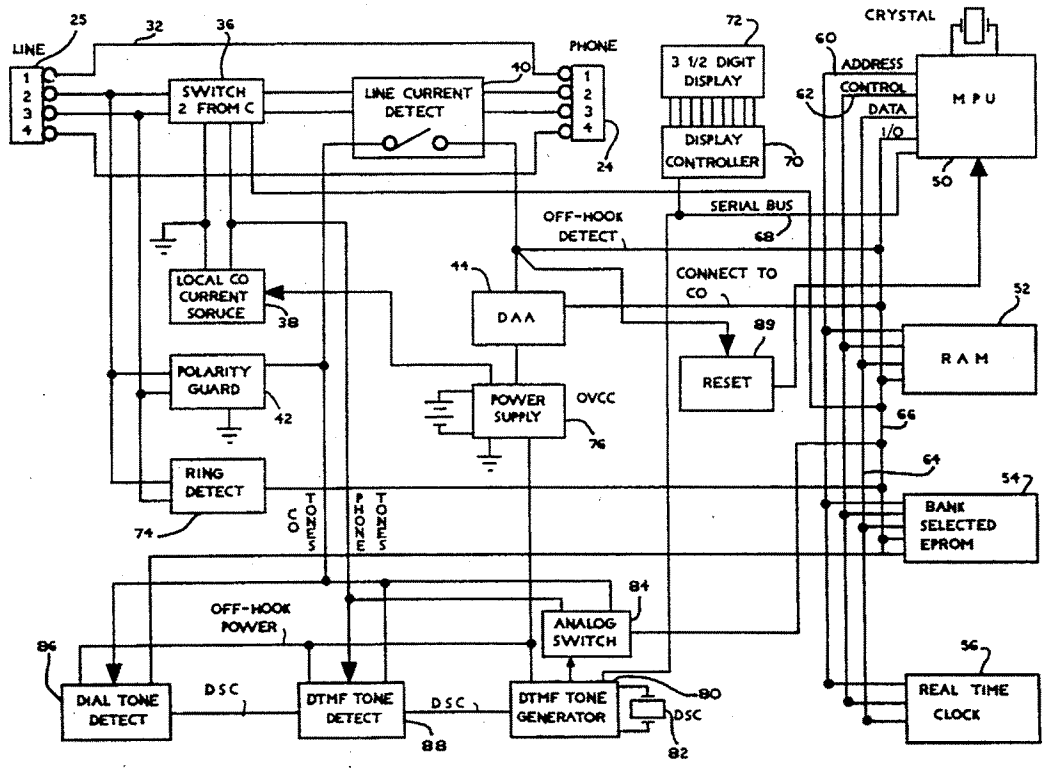

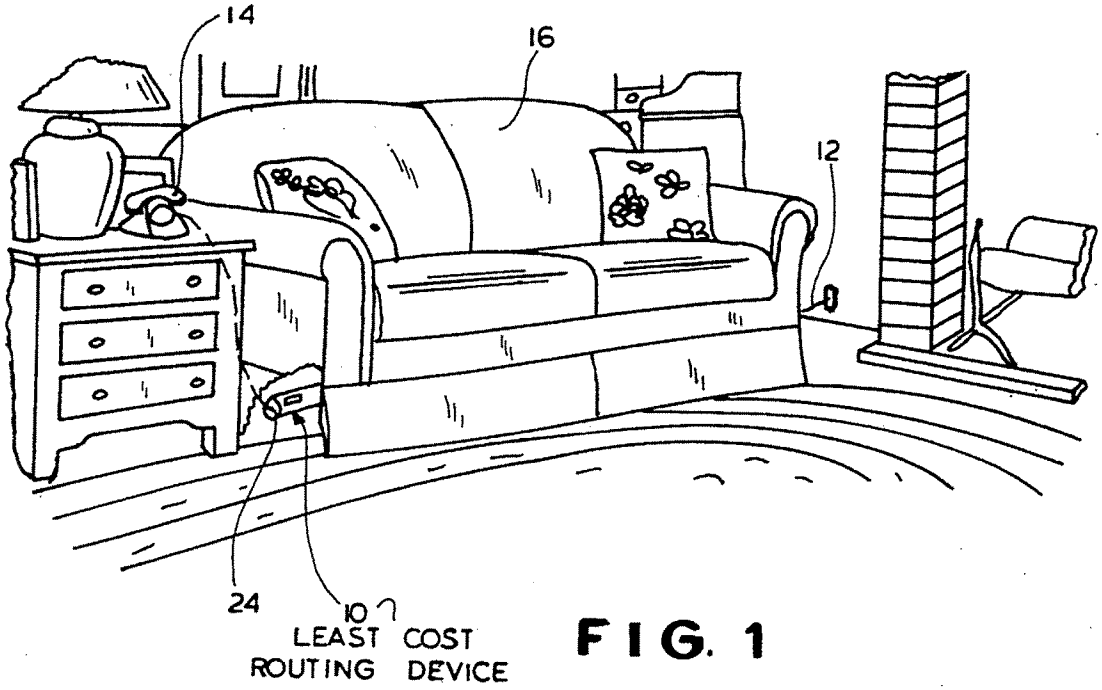
14
16
12
24
10
LEAST COST
ROUTING DEVICE

FIG. 1

FIG. 7

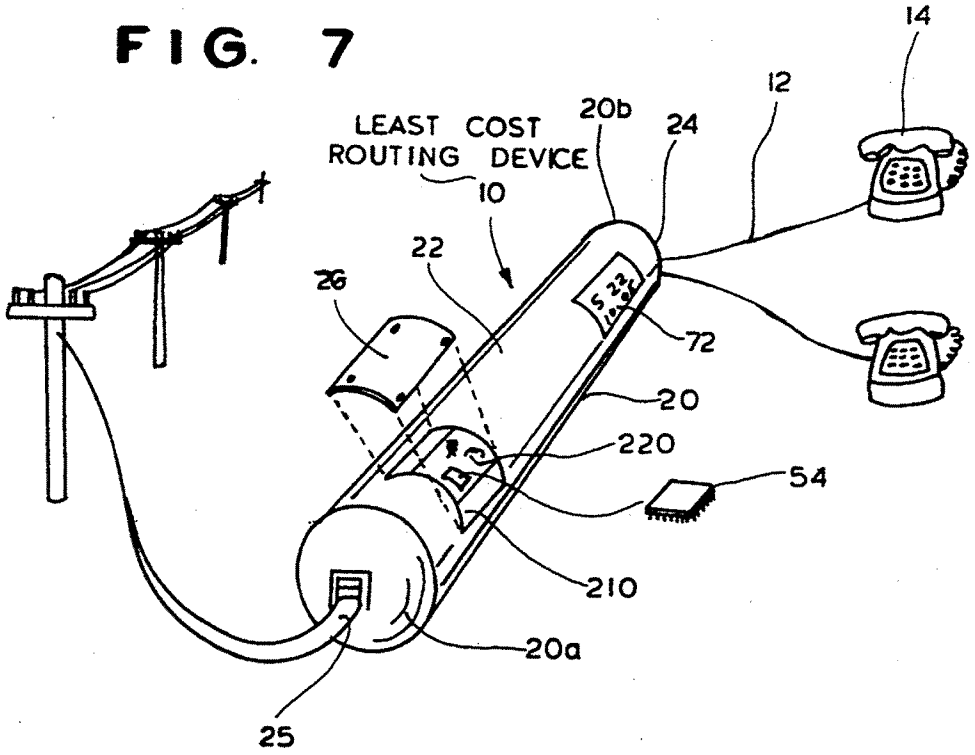
14
12
LEAST COST
ROUTING DEVICE
20b
24
10
22
26
72
20
220
54
210
20a
25

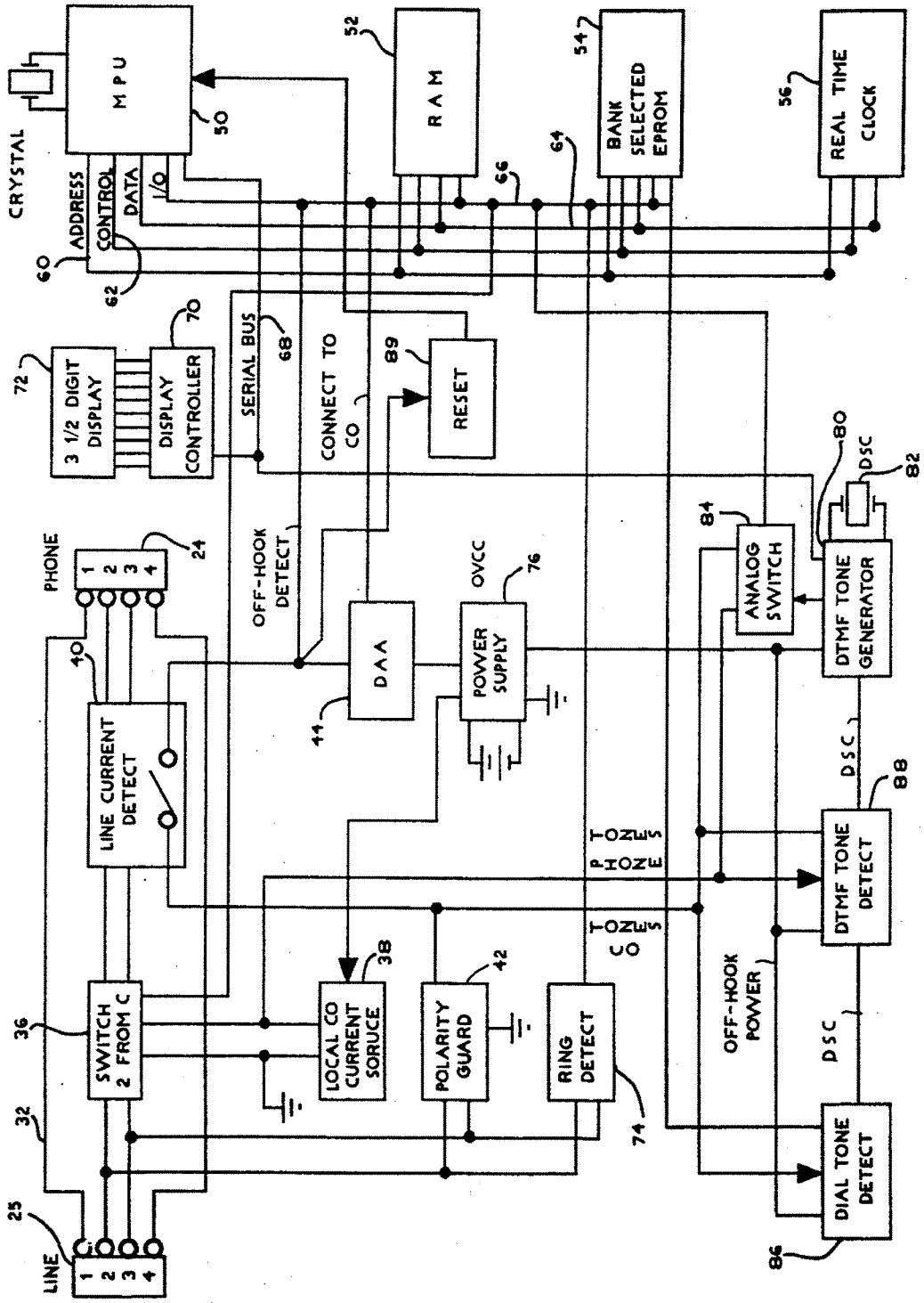
MPU
50
RAM
52
BANK SELECTED EPROM
54
REAL TIME CLOCK
56
CRYSTAL
ADDRESS
CONTROL
DATA
I/O
60
62
64
66
SERIAL BUS
68
DISPLAY CONTROLLER
70
3 1/2 DIGIT DISPLAY
72
CONNECT TO CO
RESET
89
PHONE
24
OFF-HOOK DETECT
DAA
41
OVCC
POWER SUPPLY
76
ANALOG SWITCH
84
DTMF TONE GENERATOR
80
DSC
82
LINE CURRENT DETECT
40
DSC
88
DTMF TONE DETECT
PHONE TONES
CO TONES
SWITCH 2 FROM C
36
LOCAL CO CURRENT SORUCE
38
POLARITY GUARD
42
RING DETECT
74
OFF-HOOK POWER
DSC
32
DIAL TONE DETECT
86
25
LINE

FIG. 2

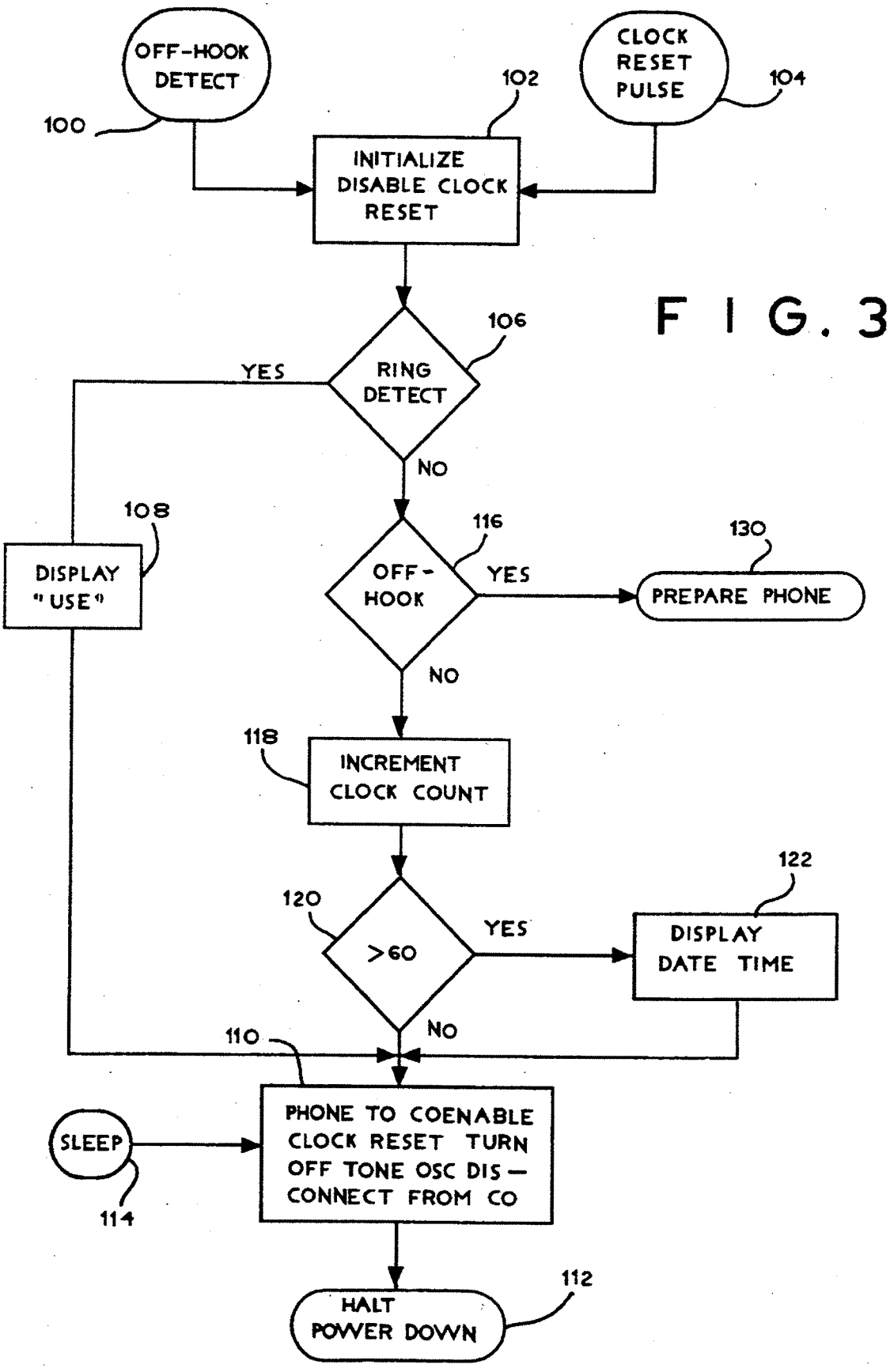
OFF-HOOK DETECT
100
CLOCK RESET PULSE
104
102
INITIALIZE DISABLE CLOCK RESET
106
RING DETECT
YES
NO
108
DISPLAY "USE"
116
OFF-HOOK
YES
130
PREPARE PHONE
NO
118
INCREMENT CLOCK COUNT
122
120
>60
YES
DISPLAY DATE TIME
NO
110
SLEEP
114
PHONE TO COENABLE CLOCK RESET TURN OFF TONE OSC DIS— CONNECT FROM CO
112
HALT POWER DOWN

FIG. 3

FIG. 4

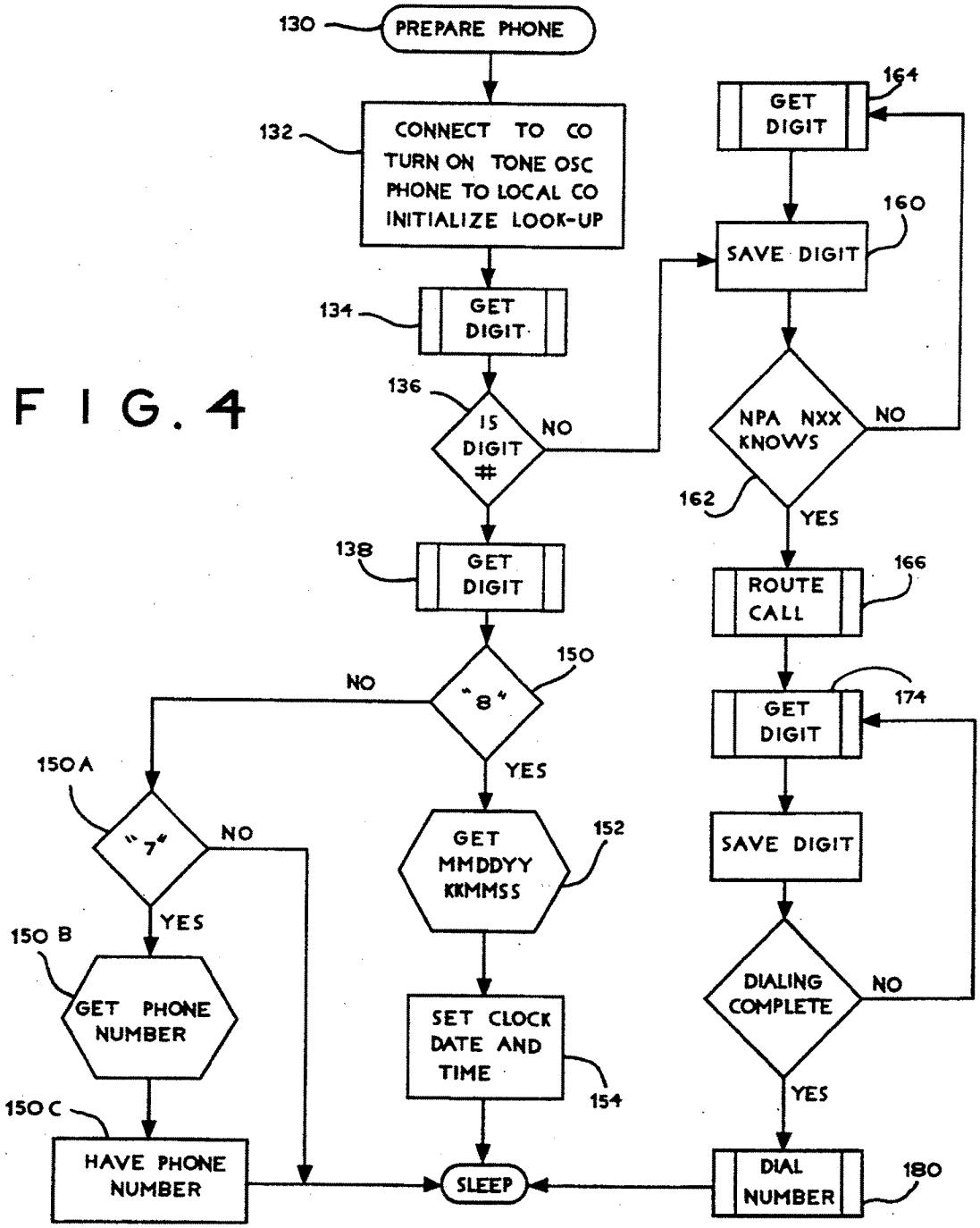
130
PREPARE PHONE
132
CONNECT TO CO
TURN ON TONE OSC
PHONE TO LOCAL CO
INITIALIZE LOOK-UP
134
GET DIGIT
136
15 DIGIT #
NO
YES
138
GET DIGIT
150
"8"
NO
YES
150A
"7"
NO
YES
150 B
GET PHONE NUMBER
150 C
HAVE PHONE NUMBER
152
GET MMDDYY KKMMSS
SET CLOCK DATE AND TIME
154
SLEEP
164
GET DIGIT
160
SAVE DIGIT
NPA NXX KNOWS
NO
162
YES
166
ROUTE CALL
174
GET DIGIT
SAVE DIGIT
DIALING COMPLETE
NO
YES
DIAL NUMBER
180

FIG. 4A

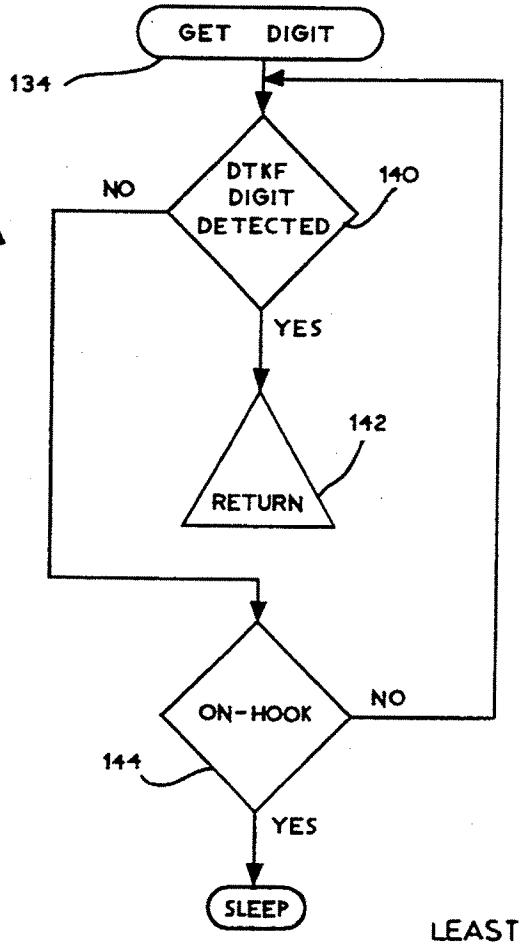
GET DIGIT
134
DTKF DIGIT DETECTED
140
NO
YES
142
RETURN
ON-HOOK
NO
144
YES
SLEEP

FIG. 6

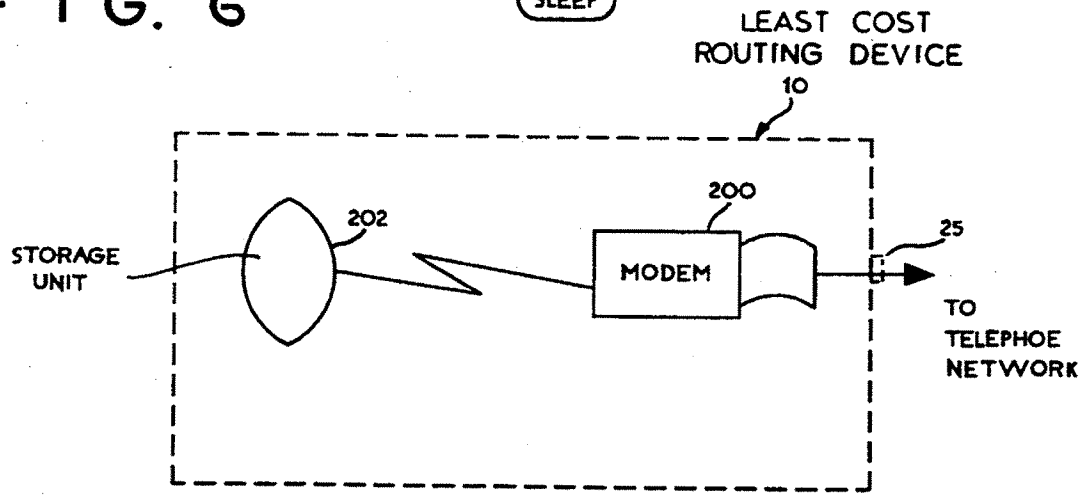
LEAST COST ROUTING DEVICE
10
200
202
25
STORAGE UNIT
MODEM
TO TELEPHOE NETWORK

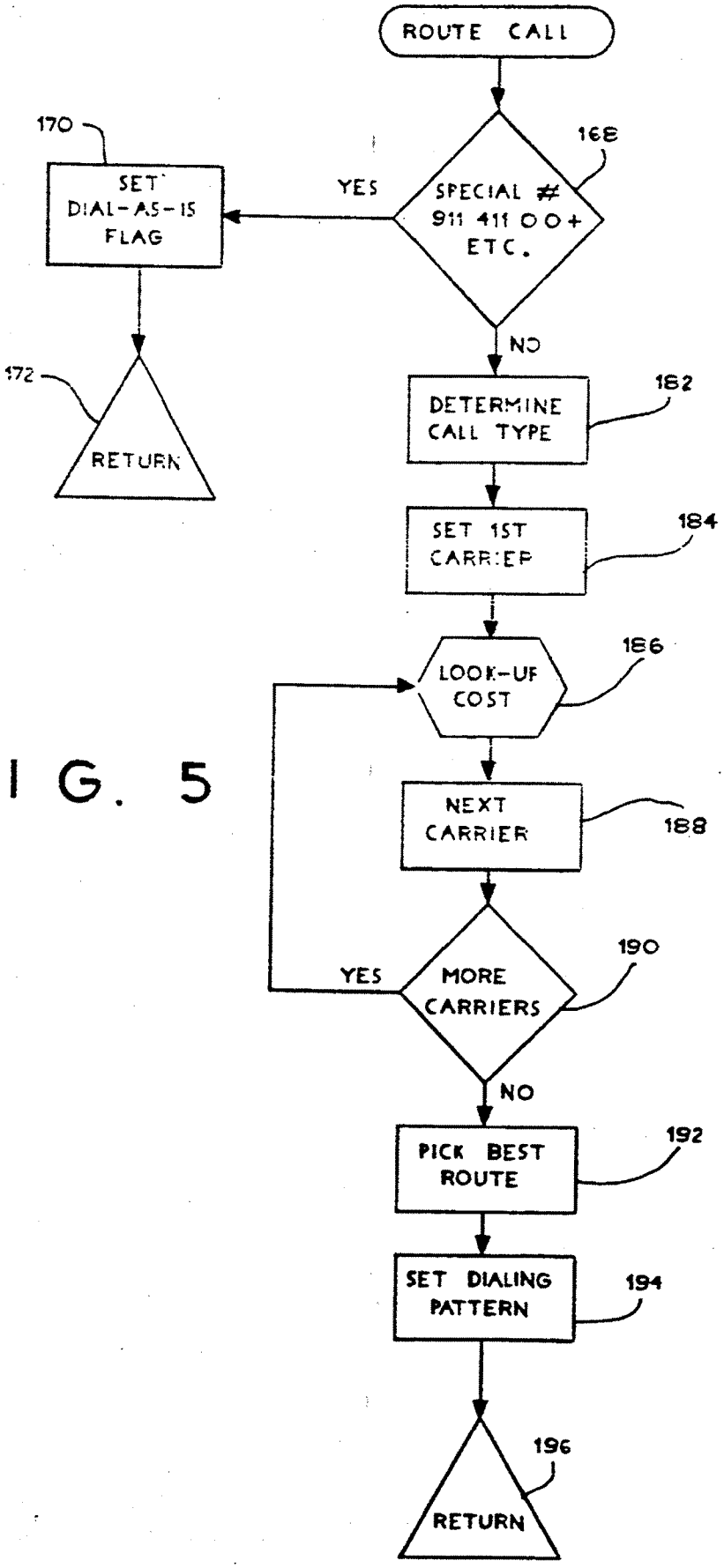
ROUTE CALL
168
SPECIAL # 911 411 OO+ ETC.
YES
170
SET DIAL-AS-IS FLAG
172
RETURN
NO
182
DETERMINE CALL TYPE
184
SET 1ST CARRIER
186
LOOK-UP COST
188
NEXT CARRIER
190
MORE CARRIERS
YES
NO
192
PICK BEST ROUTE
194
SET DIALING PATTERN
196
RETURN

FIG. 5

LEAST COST ROUTING DEVICE FOR SEPARATE CONNECTION INTO PHONE LINE

FIELD OF THE INVENTION

This invention relates to a device which can be connected directly into the phone line for routing phone calls made from a first phone along the least cost path of the telephone network to a second phone.

BACKGROUND OF THE INVENTION

The advent of numerous local and long distance telephone carriers has resulted in a wide selection of different carriers which have different telephone cost rates depending on the time of day, the number of phone calls, the location of a calling party and other factors. Typically, a consumer chooses one carrier, and maintains that carrier account for all long distance calling needs, and in some instances for local calls also. With increased competition among interstate, intrastate, interlata and intralata phone carriers, a caller could save money if different carriers are chosen for each particular phone call to a particular destination.

It has been known to design complex phones that route calls along selected switching points via selected tie lines to establish a least cost route. For example, U.S. Pat. No. 4,122,308 to Weinberger et al. discloses such a device. It has been found, however, that many consumers are unwilling to purchase a complex telephone device in substitution for the phone already used in the home. Typically, consumers buy a phone for aesthetic or economic reasons. Consumers have been found unwilling to purchase complex phone equipment in lieu of phones already purchased which are more simple, smaller and aesthetically pleasing to the eye.

SUMMARY OF THE INVENTION

One of the features of the present invention is a device that may be connected within the phone line separate and apart from the telephone and which routes telephone calls along a least cost route originating from a first telephone through the telephone network to a second telephone.

Another feature of the present invention is a device that can be connected directly within the telephone line originating from a first telephone and can be hidden from view such as behind a furniture piece.

Another feature of the invention is a device for routing telephone calls along a least cost route that can be quickly attached and detached from the telephone line such as by telephone jacks.

In accordance with the present invention, the device routes telephone calls along a least cost route originating from the first telephone through the telephone network to a second telephone. As is conventional, the network has a plurality of alternate communication switch paths corresponding to different carriers which can be chosen to route the call.

A housing forms an enclosure and has jacks mounted on the housing for interconnection to the phone line. A first jack interconnects to the phone side of the phone line and a second jack interconnects to the network side of the phone line. The device components are contained in the enclosure and includes a switch which operatively connects to the first jack for disconnecting the first phone from the network. A current source is generated through the switch to the first phone and corresponds to the current provided by the phone network at the central office. A database stores billing rate parameters for determining a least cost communication path based on the least cost routing parameters, which could include such parameters as the time and date of the call.

Means is operatively connected to the switch for detecting and storing a dialed phone number originating from the first phone. The database is addressed for identifying a plurality of communication switch paths to the dialed number as well as the cost rate of each path. The cost rate of each path is compared to determine a least cost route for the call. A tone generator is connected to the switch means and the second jack and generates a number sequence corresponding to the desired carrier so that the dialed call is routed through the second jack and phone line to the selected communication carrier so as to establish a switched connection between the first and second phones.

When a call is incoming, the switch connects the first phone to the network. An internal power supply provides power to the current generating means. In one aspect of the invention, the means generating the number sequence is a dual tone multifrequency generator that generates the necessary tones to the central office for establishing the least cost route. The detecting means includes, but is not limited to a dual tone multifrequency detector for detecting tones sent by the first phone.

The housing may be a number of different configurations. In one embodiment it is substantially cylindrical with opposing ends. The first jack is positioned on one end and the second jack is positioned on the other end.

In another aspect of the invention, the database is updated with a current billing rate schedule. In one aspect of the invention the update means includes a circuit board mounted within the enclosure, and the database is contained on a removable chip positioned on the circuit board. The housing may include a removable cover for accessing the chip on the circuit board to replace it with an updated chip. In still another aspect of the invention, the device includes a modem for receiving signals through the telephone line and downloading updated information to the database.

In still another aspect of the invention, a display is mounted on the housing and visibly displays the time and date. The time and date display receives a predetermined dial sequence from the first phone corresponding to a predetermined date and time to be displayed. After receiving the predetermined dial sequence, the display time and date is changed based on the received signals. In some designs, the date and time display can also be changed manually.

DESCRIPTION OF THE DRAWINGS

The foregoing advantages and features of the present invention will be appreciated more fully from the following description, with reference to the accompanying drawings in which:

FIG. **1** is an environmental view showing the device in accordance with the present invention positioned behind a sofa in a household.

FIG. **2** is a block diagram of the overall circuit used in the device of the present invention.

FIG. **3** is a flow chart depicting the initializing of the device and flow of an incoming call to the phone.

FIG. **4** is a flow chart depicting the routine for changing the display and dialing the codes for least cost routing in accordance with the present invention.

FIG. 4A is a flow chart illustrating the routine for obtaining digits for a least cost route.

FIG. 5 is a flow chart of a subroutine in the flow chart of FIG. 4 showing a database look-up routine.

FIG. 6 is a block diagram of the device with a modem.

FIG. 7 is a isometric view of one design of the device showing a cover that has been removed for accessing the chip to update the database.

DETAILED DESCRIPTION OF THE INVENTION

Referring now to FIG. **1**, the device **10** of the present invention is shown connected or "plugged" into the phone line **12** of a first telephone **14** in the environment of a household **15** and positioned out of sight behind a sofa **16**. As evident, the device of the present invention is advantageous because it can be readily connected within the phone line **12** and hidden from view without purchasing a new phone. Many consumers select phones based on aesthetic and economic reasons, and some consumers are unwilling to spend large sums for complex and unwieldy phones.

As shown in FIGS. **1** and **7**, the device **10** includes a housing **20** which forms an enclosure **22**. In the illustrated embodiment, the housing **20** is cylindrically configured with two opposing ends **20***a*, **20***b*. Although the cylindrical configuration is illustrated, any configuration can be used depending on the designer's choice and purchaser's desire. It is even possible to design the device **10** to be an ornament that can rest on a table or other readily visible place. A cylindrical configuration for the housing **20** has been found easy to mold and relatively inexpensive. AS shown in the drawings, the housing includes a first jack **24** for connecting "plugging" to the phone side of the phone line **12** and a second jack **25** for connection or "plugging" to the network side of the phone line.

The electronic components forming the device **10** are mounted within the enclosure, typically on a circuit board as shown in FIG. **7**. The housing can be designed with a removable cover **26** (FIG. **7**) to access the components, or a removable end where the circuit board can be slid outward to access any components.

Referring now to FIG. **2**, the basic components used in the device of the present invention are shown in the block diagram. As noted before, the second phone jack **25** has one line **32** connecting to the first phone jack **24** positioned on the other end of the cylindrically configured housing. The phone jack **25** connects to a switch **36**, referred to as a 2 Form C switch, which switches the phone off the network to the other components contained in the device. The switch **36** connects to a "local CO (central office)" current source **38** which generates a current corresponding to the current supplied by the central office of the network. The switch **36** connects and disconnects the phone from the network into the current source **38**, which in turn supplies a current to the phone equivalent to the current supplied by the central office of the network. The switch **36** also connects to a line current detector **40** (off-hook detector) which detects an off-hook or on-hook state of the phone. A combination polarity guard **42** and Direct Access Arrangement **44** (DAA) interfaces and allows communication to the network. The line current detector can be formed from numerous types and brands of device. One available device is a teltone M949 device.

The controller for the device **10** includes the standard components of a microprocessor including a microprocessing unit **50** (MPU) such as a Toshiba TMPZ 84C011 and a RAM chip **52** such as a generic chip sold by Hyundai under the designation HY6116. A bank selected Eprom **54** for storing the database is also included and can be a generic Eprom chip such as a Toshiba TC574000 chip with more Eprom than the microprocessor can directly address. A real time clock **56** maintains the proper time and provides signals for controlling the device. An example of a clock chip which can be used for the device is an Epsom RTC62421B chip. The microprocessing unit **50** includes the conventional address, control, and data buses **60**, **62**, **64** and an input output bus **66**.

A serial bus **68** connects from the MPU **50** to a display controller **70** which controls a 3½ digit display **72**. The 3½ digit display **72** displays the time and date and is positioned on the outside of the housing where it can be readily read. A ring detect circuit **74** is interconnected to the input-output bus and the incoming line jack **30** and detects the ringing of the phone. A power supply **76** is also included and provides the current for the local CO current generator **38**. In the present invention, power can be generated from the phone company when the first phone is "off-hook", or generated from the battery when the first phone is "on-hook".

Once a minute the device will update the date and time on the display **72** and then revert to a passive state also known as the "sleep" state. It is not possible to draw power for the device **10** from the phone company in an "on-hook" condition. Therefore, the power supply **76** provides power once a minute to change the display **72** to a new setting. A DTMF (dual tone multi-frequency) tone generator **80** includes a crystal oscillator **82** which together generate the tone frequencies necessary to generate the tones for the dialing sequences. An analog switch **84** allows switching to either the-phone or the network. The dial tone detect circuit **86** connects to the line coming from the polarity guard **42** and connects to the line detector **40**. The DTMF tone detector **88** detects the tones generated from the first phone. The reset circuit **89** allows for resetting the entire circuit from a begin point.

Referring now to FIGS. **3–5**, there are illustrated flow charts depicting the operation of the device in accordance with the present invention. The steps are enumerated beginning with the numeral **100** and follow through with sequential even numbers in most cases.

Initially, as shown in FIG. **3**, in step **100** the device detects an "off-hook" condition for the first phone, such as when the handle is raised from the cradle of a phone. The device is initialized in step **102** and the clock reset is disabled. The initializing step **102** can also occur when the reset occurs such as a startup in step **104**. Thus, it is evident that a reset occurs in two conditions: 1) when the phone goes "off hook" or 2) when the real time clock emits a pulse (such as once a second) for setting the clock.

In step **106** the ring detect circuit **74** detects if there is a ring. If a ring is detected, the word "USE" in step **108** is displayed on the 3½ digit display **72** corresponding to the device **10** being in use. The phone remains connected by the switch **36** to the central office network and the DTMF tone oscillator and generator **80**, **82** operation are terminated. The power is shut down in step **12** of the device to allow communication between the first phone and the second phone, who was the

calling party in this instance. The device **10** has gone into a passive mode also referred to as a "sleep mode" in step **14**.

If during initialization in step **106** the ring detector did not detect a ring, the device **10** then checks for an off-hook condition in step **16**. If there is no off-hook condition, then the device is restarting such as from a clock pulse. The clock count is incremented in step **118**. If the clock count is greater than 60 seconds in step **120**, then the display controller **70** displays a new date and time on the 3½ digit display **72** in step **122**. If the count is not greater than 60 seconds then the phone remains connected to the central office (phone network) in step **110** and the phone has gone into a passive mode in step **112**.

If the off-hook condition is sensed in step **106**, the phone is prepared in step **130**, i.e., the device is prepared to receive DTMF tone signals from the first phone (FIG. **4**). In this step the device **60** connects to the central office (phone network) in step **132** and the DTMF tone generator **80**, **82** is set to the "on" position. The first phone is connected via the switch **36** to the local central office, i.e., the local current source **38**, to generate a current through the switch to the jack **34** and to the first phone. Additionally, in step **132**, the device is initialized to begin the lookup routines in the database.

The caller at the first phone then dials a number and the device **10** enters a subroutine known as "get digit" in step **134** (FIG. **4A**). The DTMF tone detector **88** detects each digit as it is called. If the digit is a "pound sign" ("#") in step **136**, then the device is initialized to prepare the date and time on the display **72**. Although the "pound sign" is illustrated as the initial sequence code for settling the time and date, it is readily apparent that any sequence of codes can be used as long as the code is not the beginning of a telephone number.

If the digit is a "pound sign", the "get digit" subroutine is followed once again in step **138**. The "get digit" subroutine is shown in greater detail on the left side of FIG. **4**. A DTMF digit is detected in step **140** and the routine then returns in step **142** to the mainflow chart. If the digit is not detected, a test is made to see whether the first phone current is on hook in step **144**. If the first phone is not on hook the subroutine continues to detect digits. If the first phone is on hook, then the device goes into "sleep" or passive mode.

If the numeral **3** is detected in step **150**, corresponding to the letter D, then the DTMF tones following are input as the date, such as the month, day and year, as well as the time, such as the hour, minute and seconds in that order in step **152**, and displayed on the 3½ digit display in step **154**. The device then routes into the passive "sleep" mode. If the numeral "3" was not detected in step **150** the device then routes into the sleep mode, or could implement other special functions indicated by the digit, e.g. (test modes). For example, if the number "7" is detected (step **150A**) for the phone, corresponding to the letter "P", the telephone number for the device is obtained (step **150B**), and saved (step **150C**). Typically, this routine can be started by the caller pressing the pound (#) key, and the number being stored as NPA NXX XXXX.

If the pound sign was not detected in step **136**, the detected digit is saved in step **160** and the detected digits are then analyzed in step **12** to determine if the area code and exchange (the NPA NXX) are known in step **12**. If they are not known, the get "digit routine" is repeated in step **14** until the NPA NXX code is known. The call is then routed in step **16** in a route call routine, which is set forth in FIG. **5**. The device distinguishes from the dialed digit if an area code (NPA) has been dialed. If the NPA has not been dialed, this device uses the NPA from the data specified for the device location.

As shown in FIG. **5**, the device **10** initially determines whether the area code and exchange digits known are in a special category in step **168** such as 911, 411, 800, or 900 numbers. If the dial routine is a special number, the telephone signal is flagged in step **170** and returned to the main routine where further digits such as the last four digits of the phone number are obtained and received in step **174**. The digits are saved in step **176** and the dialing is completed in step **178**. The number is then dialed in step **180** and the device routes into the passive or sleep mode and the call completed. If the dialing is not complete, then the get digit routine is repeated until all digits from the telephone number are obtained.

If the number in step **168** is not a special number (FIG. **5**), the call type is determined in step **182**, e.g. if the call is local, interlata, intralata, interstate, intrastate or a combination thereof. In step **284** the first carrier is set and the cost is looked up in the database in step **186**. The next carrier is then set in step **188**. If there are more couriers in step **190**, the look up cost is repeated until all carriers are exhausted. In step **192** the best carrier is picked and the dialing pattern set in step **194**. The sequence is then returned in step **196** to the route call routine of step **166**.

Because the rates among different carrier may change monthly, or even daily and weekly depending on circumstances, the database may be updated. In one embodiment, the database can be downloaded through a modem **200** (FIG. **6**) to a storage unit **202**. However, this method will require additional components such as a modem.

In another embodiment, the Eprom chip containing the database is removed, such as by accessing the chip through an opening **210**. Once the chip is removed-,another updated chip is substituted and the housing cover **26** replaced on the device **10**. In an alternative embodiment, an end can be removed, and the entire circuit board **220** holding the components slid outwardly to expose the chips to be replaced. Once any chips are replaced, the circuit board can be slid back into the housing.

The device **10** of the present invention is advantageous over prior art call metering devices that are incorporated within the phone itself. The device of the present invention can be connected into the phone line coming from a phone and easily hidden from view or placed in an inconspicuous location, and a consumer does not have to purchase anew phone. Basic microprocessor and other circuits are used and can be contained in an attractive housing, and the date and time can be easily set by the keypad of a standard telephone. Additionally, in some instances, the determined cost of a phone call may be given a bias for preference to a given carrier. For example, if a first carrier is no greater than 5% additional cost than a second carrier, that first carrier may be given a preference.

It is to be understood that the above description is only one embodiment of the invention. Numerous other arrangements may be devised by one skilled in the art without departing from the spirit and scope of the invention.

That which is claimed is:

1. A device for routing telephone calls along a least cost route originating from a first telephone to a second telephone having an associated telephone number via a network having a plurality of alternate communication switch paths corresponding to different carriers which can be chosen to route the call and normallyproviding a current to said first telephone when said first telephone is in use, comprising

a housing forming an enclosure and comprising first jack means for connection to said first telephone and second jack means for connection to said network

switch means operatively connected to said first jack means for disconnecting said first telephone from said network,

means operatively connected to said switch means for generating a current through said switch means to the first telephone, corresponding to a current provided by said network,

database means for storing billing rate parameters for determining a least cost communication path for call corresponding to said telephone number,

means operatively connected to said switch means for detecting and storing said telephone number originating from the first telephone,

means for addressing said database means for identifying a plurality of communication switch paths to said second telephone and the cost rate of each path,

means for comparing the cost rate of each path so as to determine a least cost route, and

means operatively connected to said switch means and said second jack means for generating a number sequence corresponding to a desired carrier so that said call is routed through said second jack means to the selected communication path and carrier to establish a switched connection between said first telephone and said second telephone phone.

2. The device according to claim 1 wherein said least cost communication path parameters include the time and date of the call.

3. The device according to claim 1 wherein said switch means connects said first telephone to said network during an incoming call.

4. The device according to claim 1 including an internal power supply connected to said means for generating a current.

5. The device according to claim 1 wherein said means for generating said number sequence comprises a dual tone multifrequency generator.

6. The device according to claim 1 wherein said housing is substantially cylindrical with opposing ends, wherein said first jack means is positioned on one end and said second jack means is positioned on the opposite end.

7. The device according to claim 1 wherein said detecting means includes a dual tone multifrequency detector.

8. The device according to claim 1 including means for maintaining the time and date so as to determine the least cost route based on the time and date of the call.

9. The device according to claim 1 wherein said cost may be given a bias for preference to a given carrier.

10. The device according to claim 1 including means for updating said database means with a current billing rate schedule.

11. The device according to claim 10 wherein said update means includes a circuit board mounted inside said enclosure, and said database means comprises a removable chip on said circuit board, and means for accessing said removable chip from outside said housing.

12. The device according to claim 11 wherein said means for accessing said removable chip includes a removable cover on said housing for accessing said chip.

13. The device according to claim 10 wherein said update means includes a modem for receiving signals through said telephone line and downloading the update information.

14. A device for routing telephone calls along a least cost route originating from a first telephone to a second telephone having an associated telephone number via a network having a plurality of alternate communication switch paths corresponding to different carriers which can be chosen to route the call and normally providing a current to said first telephone when said first telephone is in use, comprising

a housing forming an enclosure and comprising first jack means for connection to said first telephone, and second jack means for connection to said network, means positioned on said housing for visibly displaying the time and date,

switch means operatively connected to said first jack means for disconnecting said first telephone from said network,

means operatively connected to said first jack means for disconnecting said first telephone from said network,

means operatively connected to said switch means for generating a current through said switch means to said first telephone corresponding to said current provided by said network,

means operatively connected to said time and date display means and said switch means for receiving a predetermined dial sequence from said first telephone corresponding to a predetermined date and time to be displayed and means for changing the displayed time and date based on the received signals,

database means for storing billing rate parameters for determining a least cost communication path for a call corresponding to said telephone number, based on such factors as the time and date of the call,

means operatively connected to said switch means for detecting and storing said telephone number originating from the first telephone,

means for addressing said database means for identifying a plurality of communication switch paths to said second telephone and the cost rate of each path,

means for comparing the cost rate of each path so as to determine a least cost route, and means operatively connected to said switch means and said second jack means for generating a number sequence corresponding to a desired carrier so that said call is routed through said second jack means to the selected communication path and carrier to establish a switched connection between said first telephone and said second telephone.

15. The device according to claim 14 including means positioned on said housing for manually changing the date and time of the display.

16. The device according to claim 14 wherein said means for generating said number sequence comprises a dual tone multifrequency generator.

17. The device according to claim **14** wherein said housing is substantially cylindrical with opposing ends, wherein said first jack means is positioned on one end and second jack means is positioned on the other end.

18. The device according to claim **14** wherein said detecting means includes a dual tone multifrequency detector.

19. The device according to claim **14** including means for updating said database means with a current billing rate schedule.

20. The device according to claim **19** wherein said update means includes a circuit board mounted inside said enclosure, and said database means comprises a removable chip on said circuit board, and means for accessing said removable chip from outside said housing.

21. The device according to claim **20** wherein said means for accessing said removable chip includes a removable cover on said housing for accessing said chip.

22. The device according to claim **19** wherein said update means includes a modem for receiving signals through said telephone line and downloading the update information.

23. The device according to claim **14** wherein said cost may be given a bias for preference to a given carrier.

24. An apparatus for displaying a time quantity which can be initiated from a telephone of the type capable of generating dual tone multifrequency signals comprising

a housing forming an enclosure and comprising first jack means for interconnection to said telephone, and second jack means for connection to a telephone switching network, said network normally providing a current to said telephone when said telephone is in use, means positioned on said housing for visibly displaying a time quantity,

switch means operatively connected to said first jack means for disconnecting said telephone from said network,

means operatively connected to said switch means for generating a current through said switch means to said telephone corresponding to said current provided by said network,

means operatively connected to said means for displaying a time quantity and said first jack means for receiving said dual tone multifrequency signals, from said telephone when said telephone is disconnected from said network, said signals corresponding to said time quantity and for changing the displayed time quantity based on signals from said telephone, and means responsive to a dialing sequence originating on said telephone and operatively connected to said switch means for connecting said telephone to said network.

25. The apparatus according to claim **24** wherein said time quantity is the time of day.

26. The apparatus according to claim **24** wherein said time quantity is the date.

* * * * *

UNITED STATES PATENT AND TRADEMARK OFFICE

CERTIFICATE OF CORRECTION

PATENT NO. : 5,425,085

DATED : June 13, 1995

INVENTOR(S) : Gerald J. Weinberger, et al.

It is certified that error appears in the above-identified patent and that said Letters Patent is hereby corrected as shown below:

Col. 8, line 29-31, please delete "means operatively connected to said first jack means for disconnecting said first telephone from said network,".

Signed and Sealed this

Seventh Day of November, 1995

Attest:

BRUCE LEHMAN

Attesting Officer

Commissioner of Patents and Trademarks

[redacted]

US005425085B1

(12) REEXAMINATION CERTIFICATE (4452nd)

United States Patent
Weinberger et al.

(10) Number: US 5,425,085 C1
(45) Certificate Issued: Oct. 9, 2001

(54) **LEAST CONTROL ROUTING DEVICE FOR SEPARATE CONNECTION INTO PHONE LINE**

(75) Inventors: **Gerald J. Weinberger**, Smithtown; **Roger C. Lee**, Wading River, both of NY (US)

(73) Assignee: **Rates Technology Inc.**, Smithtown, NY (US)

Reexamination Request:
No. 90/005,472, Aug. 31, 1999

Reexamination Certificate for:

Patent No.:	**5,425,085**
Issued:	**Jun. 13, 1995**
Appl. No.:	**08/210,670**
Filed:	**Mar. 18, 1994**

Certificate of Correction issued Nov. 7, 1995.

(51) **Int. Cl.**[7] **H04M 15/00**; H04M 7/00
(52) **U.S. Cl.** **379/112**; 379/111; 379/113; 379/114; 379/116; 379/130; 379/131; 379/219; 379/220; 379/221
(58) **Field of Search** 379/111, 112, 379/113, 114, 115, 116, 130, 131, 132, 219, 220, 221

(56) **References Cited**

U.S. PATENT DOCUMENTS

5,161,109		11/1992	Keating et al.	364/464.02
5,212,789		5/1993	Rago	395/600
5,400,395	*	3/1995	Berenato	379/114
5,420,914	*	5/1995	Blumhardt	379/115
5,473,630		12/1995	Penzias et al.	375/114
5,515,425		5/1996	Penzias et al.	379/114
5,799,071		8/1998	Azar et al.	379/113

FOREIGN PATENT DOCUMENTS

0 586 157 A2	3/1994	(EP)	G06F/15/403

OTHER PUBLICATIONS

Communiqué Telecommunications, Inc. (Ontario, California), "Customized Telemiser Selects Low–Cost Routing," *Computerworld*, vol. XVIII, No. 48, Nov. 28, 1983, p. 109 (plus cover page and contents page).

Communiqué Telecommunications, Inc. (Ontario, California), "Least–Cost Router," *Telecommunications*, vol. 18, No. 1, Jan., 1984, p. 92 (plus cover page and contents page).

Communiqué Telecommunications, Inc. (Ontario, California), "How to Make the Least of Your Long Distance Phone Bill," *Communications News*, vol. 21, No. 9, Sep. 1984, p. 171 (plus cover page).

Communiqué Telecommunications, Inc. (Ontario, California), "How to Make the Least of Your Long Distance Phone Bill," *Sports Illustrated*, Oct. 1, 1984, p. 113 (plus cover page).

CALLMISER Trademark File History (Registration No. 1725288; Registration Date Oct. 20, 1992; International Class 9).

* cited by examiner

Primary Examiner—Vijay Shankar

(57) **ABSTRACT**

A device interconnects within the phone line coming from a first phone and routes telephone calls along a least cost route originating from the first telephone to a second telephone via the network. A housing forms an enclosure and has a first jack for interconnection to the phone side of the phone line and a second jack for interconnection to the network side of the phone line. The housing forms an enclosure which includes a switch for disconnecting the first phone from the network. The device generates a source of current through the switch to the first phone corresponding to the amount of current provided by the phone network. A database stores billing rate parameters for determining various communication paths of different carriers based on parameters such as the time and date of the call. Phone calls from the first phone are detected and stored. The database is addressed and a plurality of communication switch paths are identified as well as the cost rate of each path. The cost rates for each identified path are compared to determine a least cost route for the call. The device generates a number sequence corresponding to a desired carrier so that the dialed call is routed through the second jack and phone line to the selected communication path and carrier so as to establish a switched connection between the first and second phones.

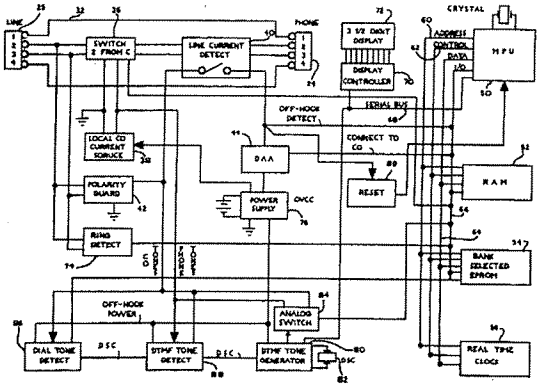

REEXAMINATION CERTIFICATE ISSUED UNDER 35 U.S.C. 307

NO AMENDMENTS HAVE BEEN MADE TO THE PATENT

AS A RESULT OF REEXAMINATION, IT HAS BEEN DETERMINED THAT:

The patentability of claims **1–26** is confirmed.

* * * * *

Exhibit B

Civil Action No. 07-441 JJF

US005519769A

United States Patent [19]

Weinberger et al.

[11] Patent Number: 5,519,769

[45] Date of Patent: May 21, 1996

[54] **METHOD AND SYSTEM FOR UPDATING A CALL RATING DATABASE**

[75] Inventors: **Gerald J. Weinberger**, Smithtown; **Roger C. Lee**, Wading River, both of N.Y.

[73] Assignee: **Rates Technology Inc.**, Smithtown, N.Y.

[21] Appl. No.: **223,082**

[22] Filed: **Apr. 4, 1994**

[51] **Int. Cl.**[6] **H04M 15/00**

[52] **U.S. Cl.** **379/112**; 379/111; 379/113; 379/114; 379/115; 379/130; 379/131; 379/132

[58] **Field of Search** 379/111, 112, 379/113, 114, 115, 116, 130, 131, 132, 88, 104, 105, 106

[56] **References Cited**

U.S. PATENT DOCUMENTS

4,104,486	8/1978	Martin	379/106
4,122,308	10/1978	Weinberger	379/114
4,136,262	1/1979	Clark, Jr.	179/6.3
4,198,545	4/1980	Haist et al.	179/6.3
4,209,668	6/1980	Weinberger et al.	179/90
4,226,360	10/1980	Simjian	379/106
4,410,765	10/1983	Hestad	379/112
4,439,636	3/1984	Newkirk	379/91
4,521,857	6/1985	Reynolds	379/88
4,585,904	4/1986	Mincone	379/131
4,656,657	4/1987	Hunsicker	379/131
4,751,728	6/1988	Treat	379/114
4,813,065	3/1989	Segala	379/116
4,888,822	12/1989	Weinberger et al.	379/130
4,935,956	6/1990	Hellwarth	379/112
5,003,584	3/1991	Benyacar	379/135
5,187,710	2/1993	Chau	379/114
5,319,701	6/1994	Hird et al.	379/132

Primary Examiner—Stephen Chin
Assistant Examiner—Vijay Shankar
Attorney, Agent, or Firm—James & Franklin; Harold James; Robert L. Epstein

[57] **ABSTRACT**

A method and system for updating a database stores billing rate parameters for call rating devices associated with a calling station. The calling station calls at a predetermined date and time a rate provider, which includes billing rate parameters for a plurality of calling stations. The call rating device transmits over the telephone network to the rate provider the phone number of the calling station, and the date and time of the last updated database. The rate provider verifies that the billing rate parameters of the calling station should be updated, then transmits back over the telephone network to the calling station the updated database. The rate provider also sends data as to the new date and time for the call rating device to place a call to the rate provider.

48 Claims, 7 Drawing Sheets

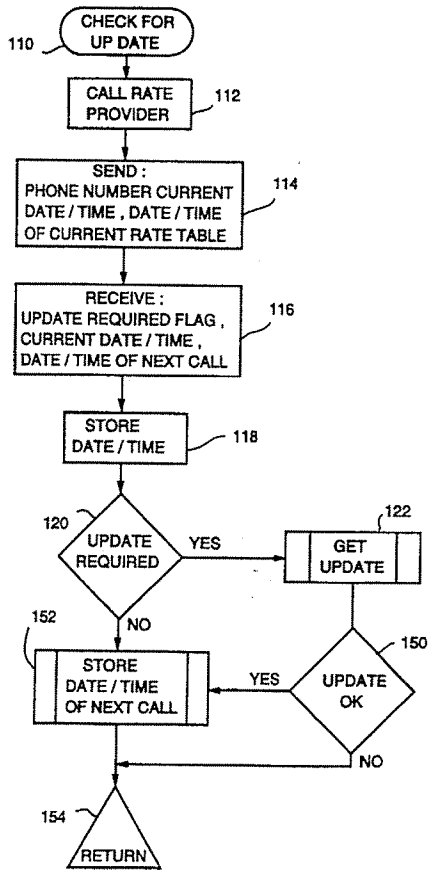

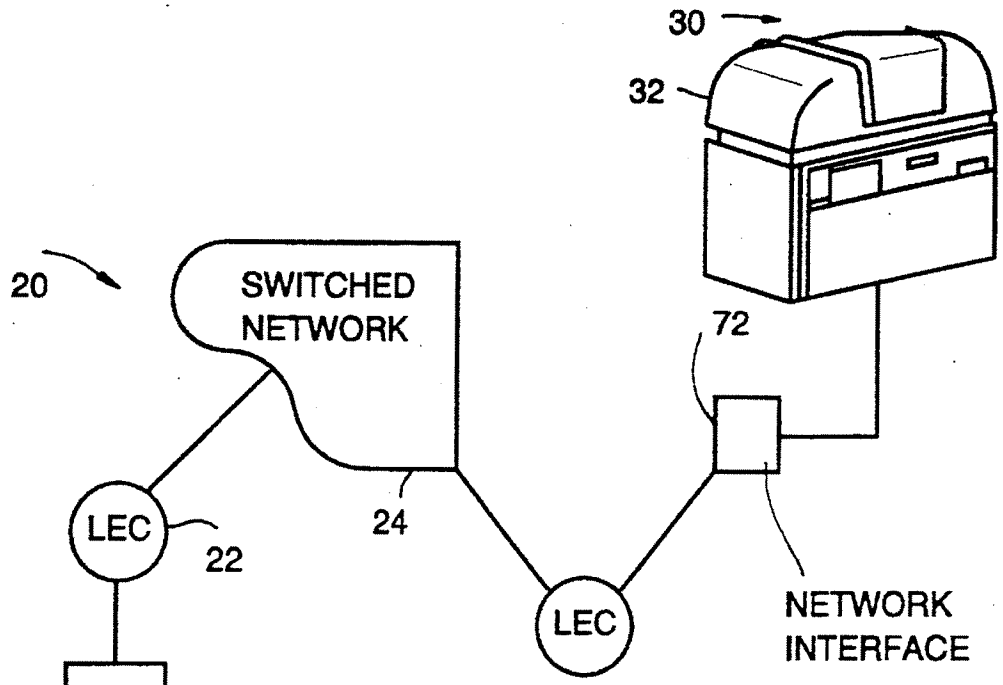
30
32
20
SWITCHED NETWORK
72
LEC
22
24
LEC
NETWORK INTERFACE

FIG 1

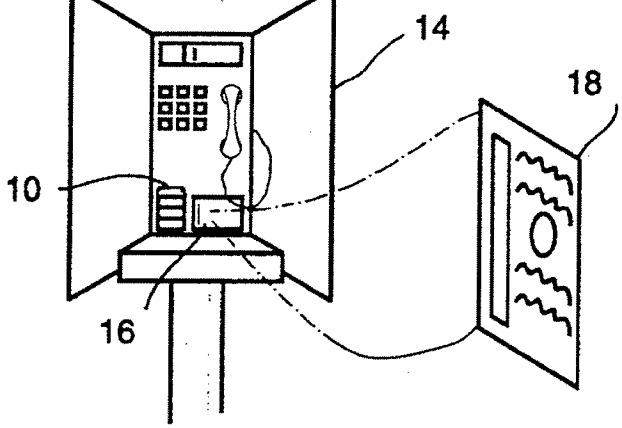
TELEPHONE
14
18
10
16

FIG 3

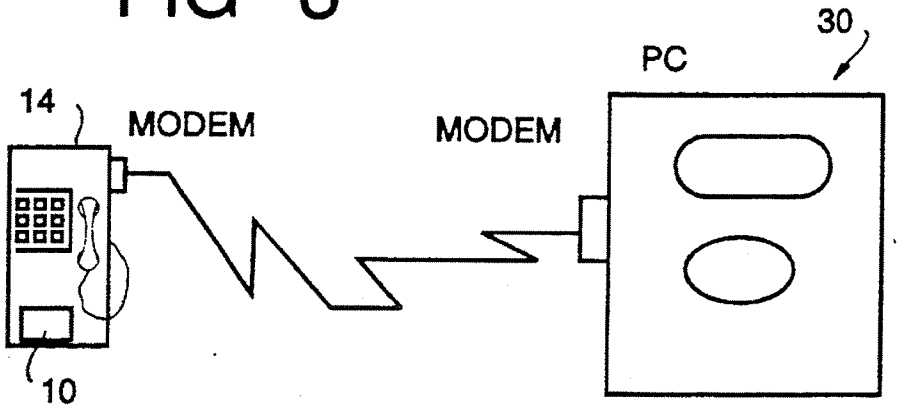
30
PC
14
MODEM
MODEM
10

FIG 2

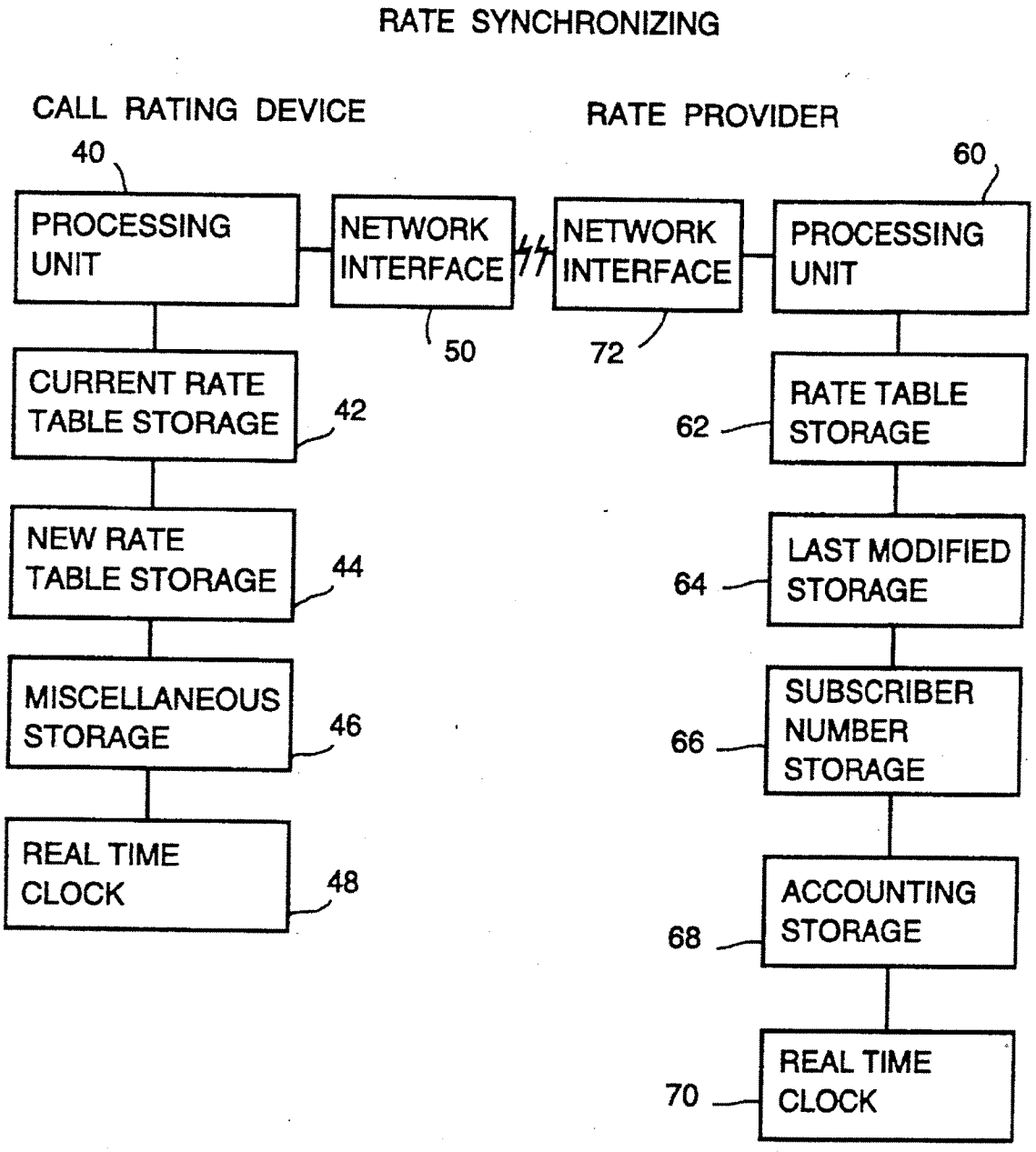
RATE SYNCHRONIZING
CALL RATING DEVICE
RATE PROVIDER
40
60
PROCESSING UNIT
NETWORK INTERFACE
NETWORK INTERFACE
PROCESSING UNIT
50
72
CURRENT RATE TABLE STORAGE
42
RATE TABLE STORAGE
62
NEW RATE TABLE STORAGE
44
LAST MODIFIED STORAGE
64
MISCELLANEOUS STORAGE
46
SUBSCRIBER NUMBER STORAGE
66
REAL TIME CLOCK
48
ACCOUNTING STORAGE
68
REAL TIME CLOCK
70

FIG 4

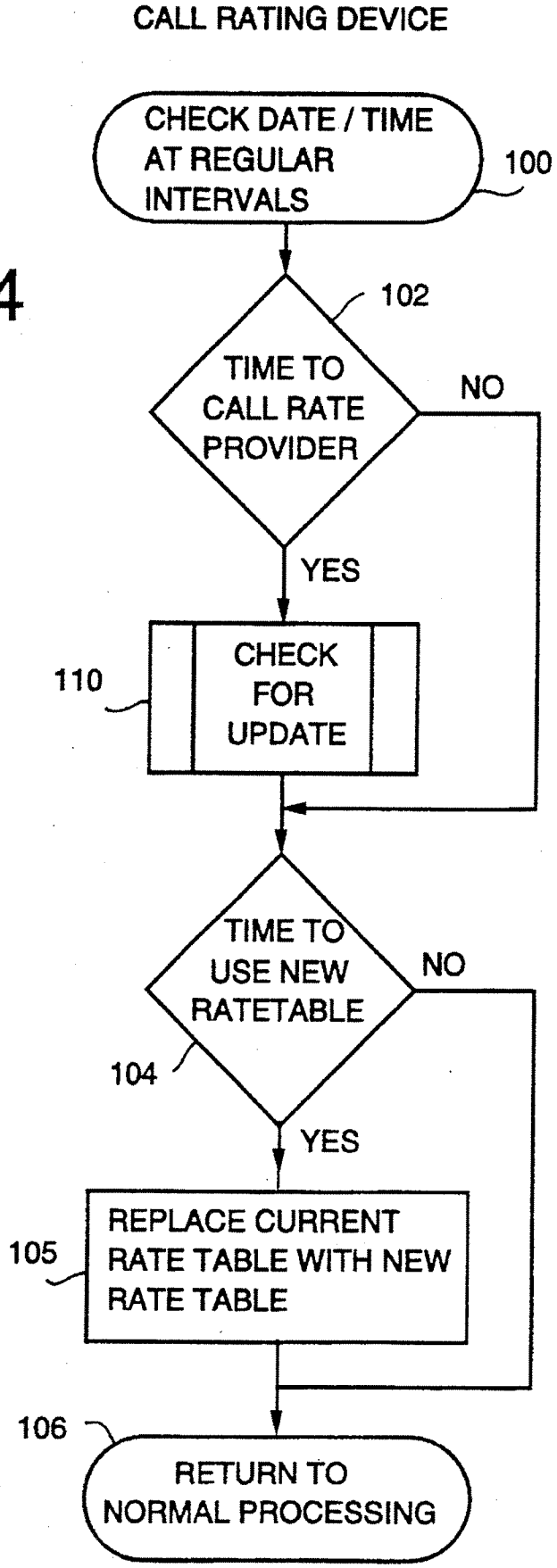
CALL RATING DEVICE
CHECK DATE / TIME AT REGULAR INTERVALS
100
102
TIME TO CALL RATE PROVIDER
NO
YES
110
CHECK FOR UPDATE
TIME TO USE NEW RATETABLE
NO
104
YES
105
REPLACE CURRENT RATE TABLE WITH NEW RATE TABLE
106
RETURN TO NORMAL PROCESSING

FIG 5

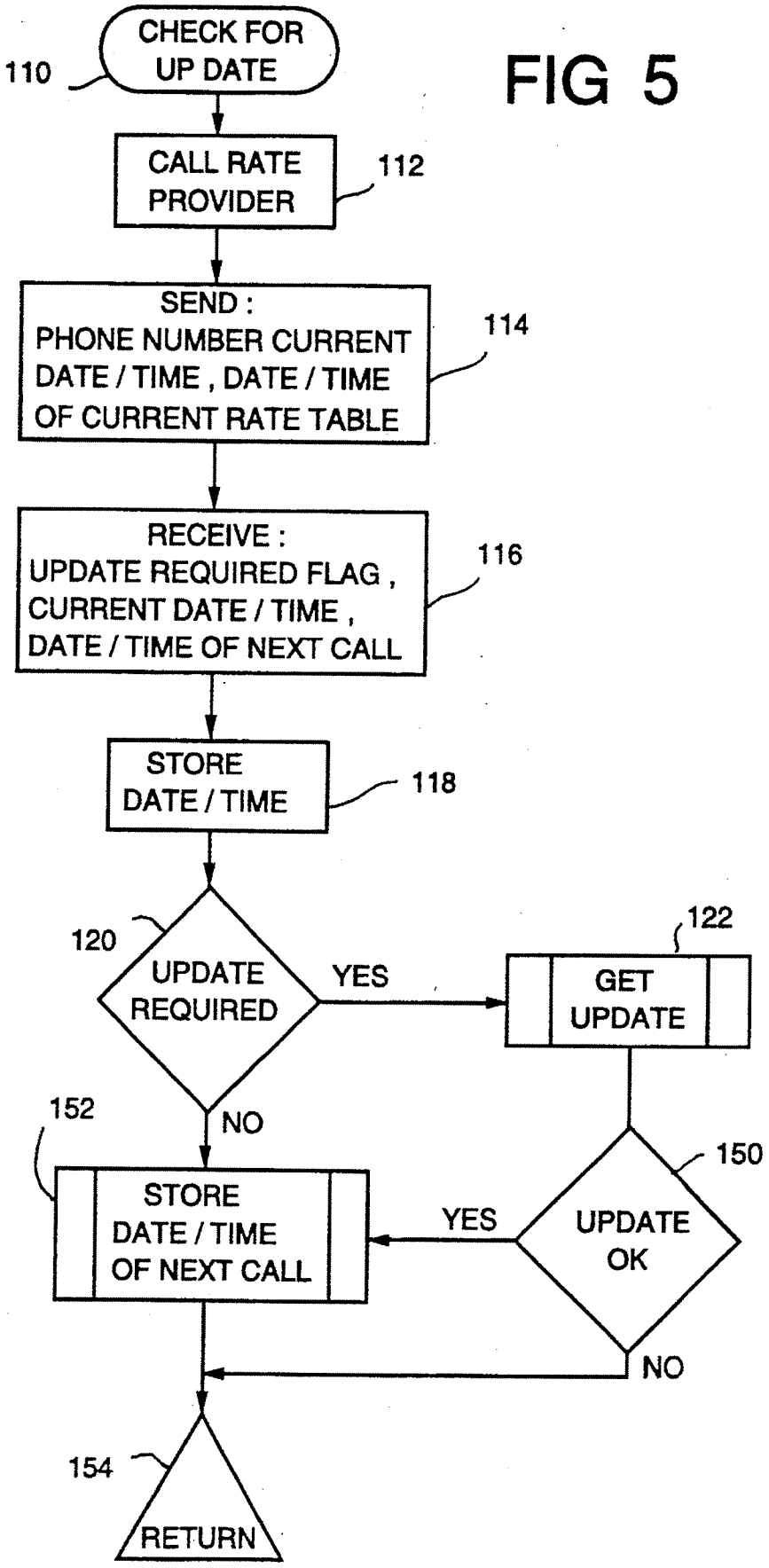
CHECK FOR UP DATE
110
CALL RATE PROVIDER
112
SEND : PHONE NUMBER CURRENT DATE / TIME , DATE / TIME OF CURRENT RATE TABLE
114
RECEIVE : UPDATE REQUIRED FLAG , CURRENT DATE / TIME , DATE / TIME OF NEXT CALL
116
STORE DATE / TIME
118
120
UPDATE REQUIRED
YES
122
GET UPDATE
NO
152
STORE DATE / TIME OF NEXT CALL
YES
150
UPDATE OK
NO
154
RETURN

FIG 6

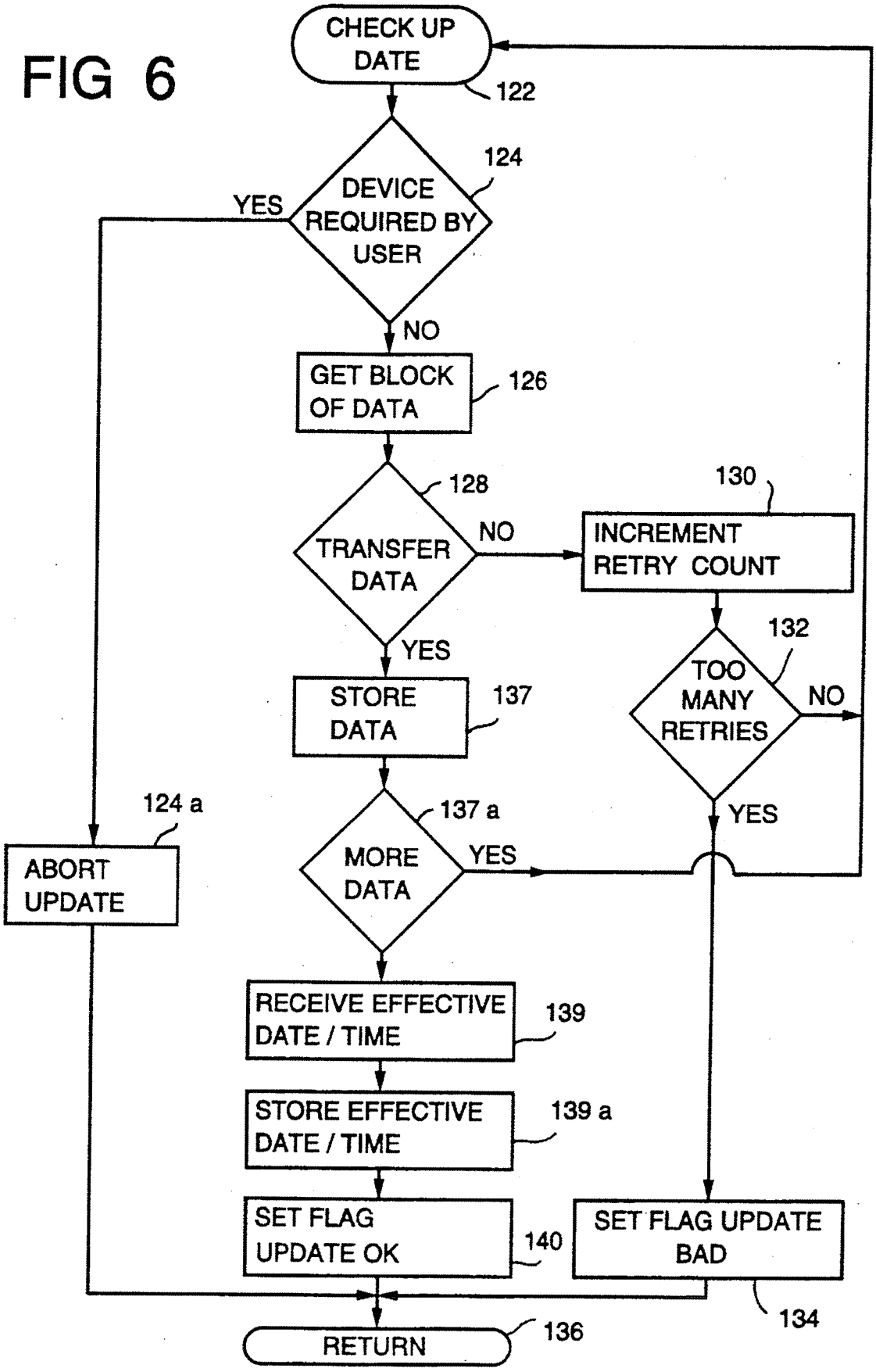
CHECK UP DATE
122
DEVICE REQUIRED BY USER
124
YES
NO
GET BLOCK OF DATA
126
TRANSFER DATA
128
NO
INCREMENT RETRY COUNT
130
YES
STORE DATA
137
TOO MANY RETRIES
132
NO
YES
ABORT UPDATE
124 a
MORE DATA
137 a
YES
RECEIVE EFFECTIVE DATE / TIME
139
STORE EFFECTIVE DATE / TIME
139 a
SET FLAG UPDATE OK
140
SET FLAG UPDATE BAD
134
RETURN
136

FIG 7

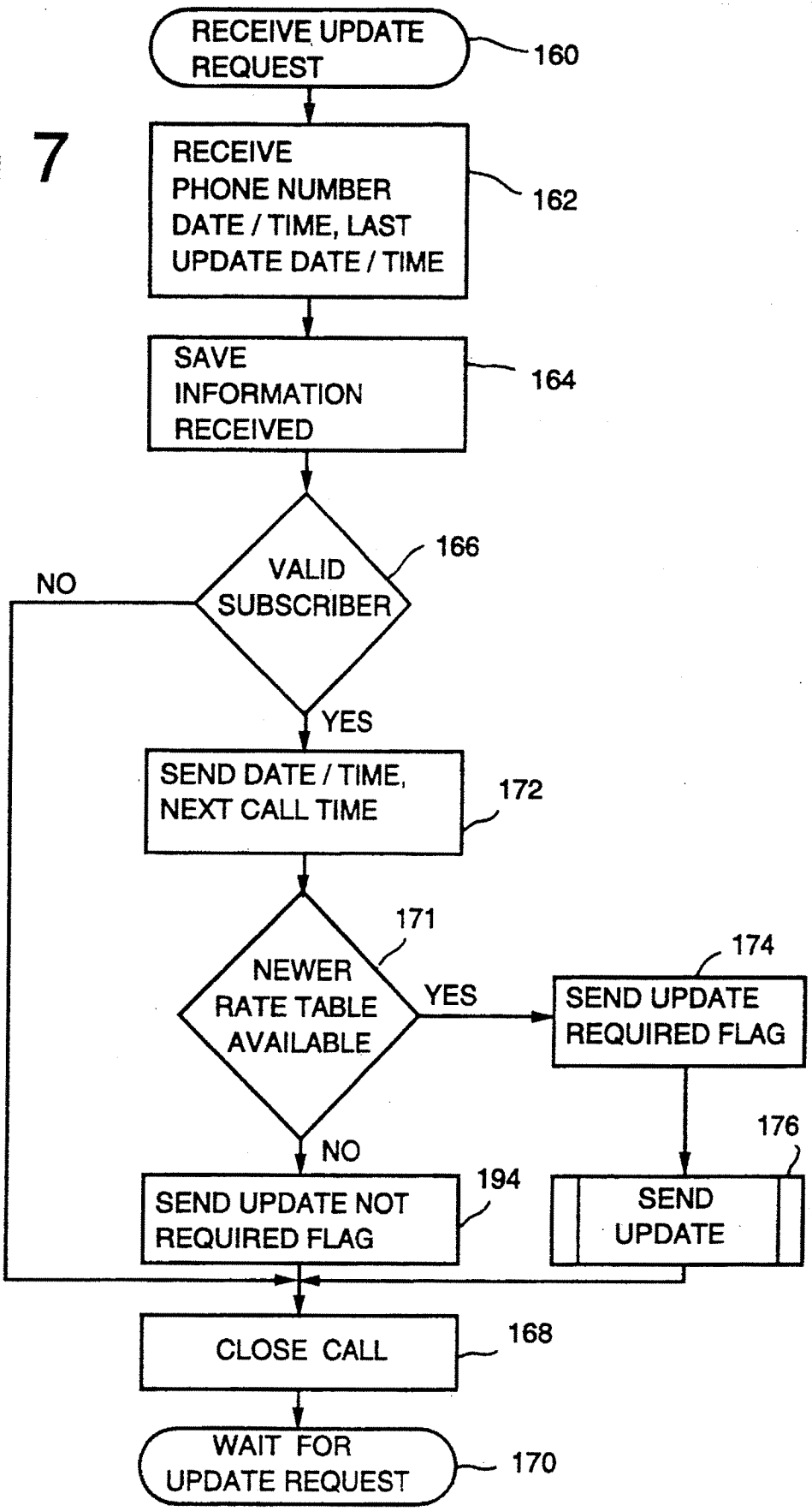
RECEIVE UPDATE REQUEST
160
RECEIVE PHONE NUMBER DATE / TIME, LAST UPDATE DATE / TIME
162
SAVE INFORMATION RECEIVED
164
VALID SUBSCRIBER
166
NO
YES
SEND DATE / TIME, NEXT CALL TIME
172
NEWER RATE TABLE AVAILABLE
171
YES
SEND UPDATE REQUIRED FLAG
174
NO
SEND UPDATE NOT REQUIRED FLAG
194
SEND UPDATE
176
CLOSE CALL
168
WAIT FOR UPDATE REQUEST
170

FIG 8

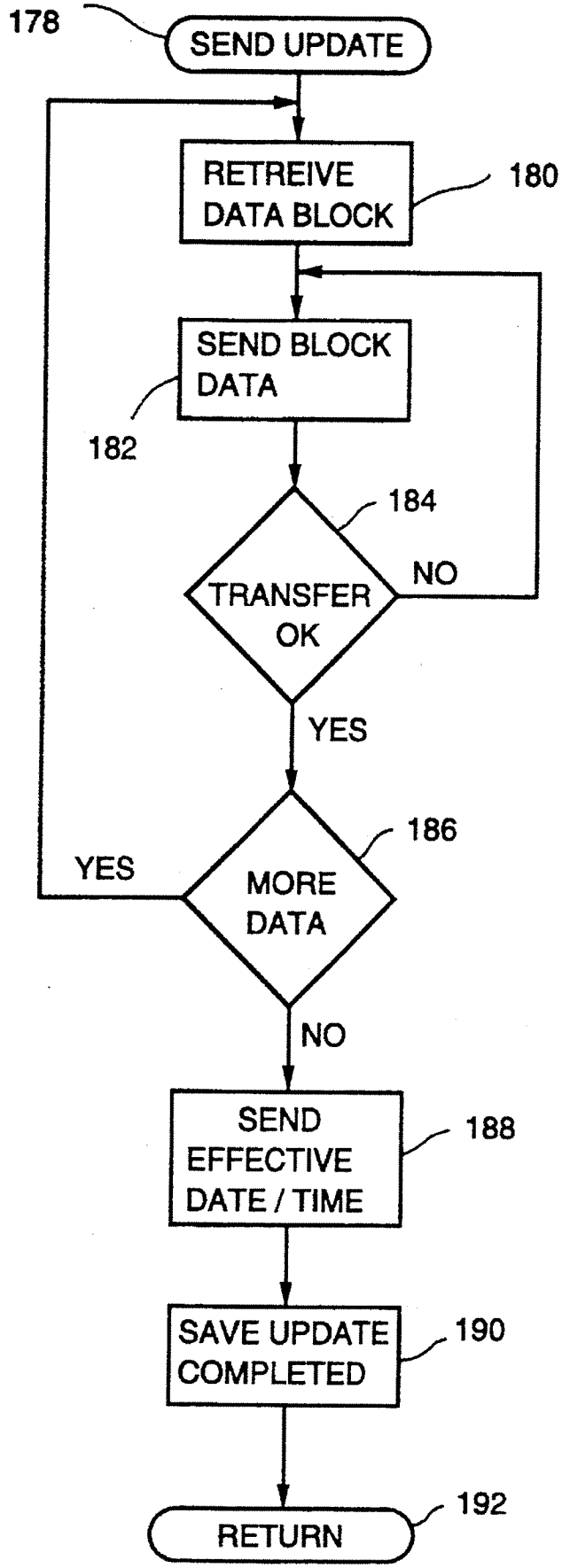
178
SEND UPDATE
RETREIVE DATA BLOCK
180
SEND BLOCK DATA
182
184
TRANSFER OK
NO
YES
186
MORE DATA
YES
NO
SEND EFFECTIVE DATE / TIME
188
SAVE UPDATE COMPLETED
190
RETURN
192

METHOD AND SYSTEM FOR UPDATING A CALL RATING DATABASE

FIELD OF THE INVENTION

This invention leads to a method and system for updating a database that stores billing rate parameters for a call rating device used in determining the cost of a telephone call.

BACKGROUND OF THE INVENTION

Competition among numerous local and long distance telephone carriers often results in many cost changes associated with placing both local and long distance telephone calls. Anticipated telephone services will probably include debit card calling from pay phones, as well sophisticated computer network hookup to the telephone network via pay telephones or other calling stations. In such circumstances, it is essential that any database storing a rate table used to cost such calls be accurate and current. The rates must be synchronized to current charges to maintain proper debiting of debit cards and cost charges on databases of cost accounting systems.

In copending patent application Ser. No. 08/210670, entitled "Least Cost Routing Device For Separate Connection Into Phone Line", filed Mar. 18, 1994, a device interconnects within the phone line of a first phone station such as in a residential household, and routes telephone calls along a least cost route originating from that telephone to a destination telephone via the telephone network. A database within the device stores billing rate parameters for determining various communication paths to different carriers based on parameters such as time and date of the call. A home purchaser of such device and service relies on the database to ensure that the least cost route is chosen. The database must be kept current, and updated with the latest rate changes, or the device's function does not consumer perform to expectations.

SUMMARY OF THE INVENTION

The advantages and features of the present invention now allows the database that stores billing rate parameters in a rate table for call rating devices to be updated. The call rating device is connected at a predetermined time and date via a data transfer line to a rate provider having billing rate parameters for a plurality of calling stations. Indicia identifying the call rating device and the date and time of the last update of the billing rate parameters is transmitted over the data transfer line to the rate provider. The rate provider verifies that the billing rate parameters should be updated, and it transmits to the call rating device the updated billing rate parameters when the rate provider determines that an update is required.

In one aspect of the invention, the data transfer line is a part of the telephone network. The call rating device is associated with a calling station and connects to the network via a modem. The rate provider includes a database stored in a personal computer, minicomputer or other similar device, which could connect to the network via a modem.

In one aspect of the invention, the data transfer between the call rating device and rate provider is terminated when the call rating device is used. Transfer of information should not interfere with the normal usage of the call rating device. This is advantageous such as when the call rating device is

incorporated within a pay telephone. If a customer desires to use the telephone, any pending rate transfer is terminated.

In another aspect of the invention, the call rating device stores the updated billing parameters in a separate database. When the telephone network switches to the new rates, the call rating device automatically substitutes the updated billing rate schedule into the old database. Typically, the rate provider sends the time and date when any call rating devices which are part of a rating network should call the rate provider to solicit rate information. The rate provider then sends a new billing rate schedule to respective call rating devices at different times. This is advantageous when many call rating devices are subscribers to the rate network. The rate provider will not be overloaded at one time with numerous "request for update" calls. During updating, the rate provider sends new times and dates when each respective call rating device should call for an updated database.

DESCRIPTION OF THE DRAWINGS

The foregoing advantages and features of the present invention will be appreciated more fully from the following description with reference to the accompanying drawings in which:

FIG. **1** is an environmental view showing the call rating device incorporated within a debit telephone connected via the telephone network to a rate provider in the form of a minicomputer.

FIG. **2** is a block diagram of the overall components of the call rating device and rate provider.

FIG. **3** is a block diagram showing basic components of a pay telephone and a call rating device in the form of a personal computer where modems connect to the telephone network.

FIG. **4** is a high level flow chart showing the basic processing for using and replacing a current rate table with a new rate table.

FIG. **5** is a flowchart showing the subroutine where the call rating device is checked for updates.

FIG. **6** is a flowchart showing the subroutine where the call rating device obtains the information from the rate provider.

FIG. **7** is a flowchart showing the routine where the rate provider receives an updated request from the call rating device.

FIG. **8** is a flowchart showing the routine where the rate provider sends an update to the call rating device.

DETAILED DESCRIPTION OF THE INVENTION

Referring now to FIG. **1**, there is illustrated the call rating device **10** of the present invention which is incorporated within a pay telephone **14**, which in the illustrated example is a debit telephone. Although the description proceeds in reference to the illustrated debit telephone **14**, it is understood that the call rating device **10** can be incorporated with the least cost rating device disclosed in U.S. patent application Ser. No. 08/210,670, entitled "Least Cost Routing Device For Separate Connection Into Phone Line, "filed", Mar. 18, 1994, the disclosure which is hereby incorporated by reference, and it can be incorporated with other telephones or personal computers connected to a LAN network.

In the illustrated embodiment, the debit telephone **14** includes a card slot **16** where a debit card **18** is inserted. The debit **18** card typically includes a dollar amount which will

be debited each minute as the phone is used. The phone includes an internal modem connection to allow data transfer along the phone network **20**. The phone network typically includes a central office **22** and a switched network **24**.

In the illustrated example, the rate provider **30** is a large capacity computer with a hard drive **32** for storing the rate information for various calling stations such as the debit telephone **14**. Although a minicomputer is illustrated as a rate provider, in smaller rate networks when not many subscribers use the system of the invention, a powerful personal computer will suffice.

In accordance with the present invention, the rate provider services numerous other subscribers to the updating service, and could include other debit telephones, household/residential telephones using plug devices as disclosed in the copending '670 application, or personal computers in cost management systems, LAN systems and other similar uses. The users form a rate network. Each user is a subscriber to the overall rate network. The billing rate parameters could include the rates for local and long distance calls, and the rates of various carriers in some instances.

As shown in FIG. **2**, the call rating device **10** would typically include a processing unit **40** such as a standard microprocessor unit. The current rate table storage **42** used for storing the billing rate parameters forming the rate table could be a static ram or any nonvolatile storage such as currently used with IBM Compatible PCs. An EEPROM has been found advantageous also. The new rate table storage **44** can be identical to the current rate table storage **42**, except that the new rate table storage will be substituted for the current rate table when an update is required. Miscellaneous storage **46** can also be static ram or other similar storage devices and will store such items as the phone number associated with the call rating device, the date and time in which to call the rate provider, as well as other miscellaneous information.

The amount of required storage capacity could be small, typically on the order of about 32K byte. Naturally, the amount of storage varies depending on the type of telephone or other device which is associated with the call rating device, and the end use of the device. The real time clock **48** maintains time over the processing unit and the movement of data between the various storage devices **42**, **44** and **46**. In the illustrated embodiment, the network interface for the call rating device is a modem which interfaces with the phone network. In some instances, however, the network interface could be associated with T1 lines and other communication paths.

The rate provider also includes a processing unit **60**. However, because of the larger database and processing demands placed upon the rate provider, the processing unit **60** typically is a larger unit such as associated with a minicomputer or high powered PC compatible computer. The rate table storage **62** can be a hard disc or any other type of large capacity data storage to keep track of all call rating device databases which subscribe to the rate network. The last modified storage **64** is a storage area where every modification to a database is stored to maintain a record of rate table modifications for each call rating device in the rate network.

The subscriber number storage **66** stores each telephone number associated with a call rating device, such as the telephone number associated with the debit telephone station illustrated in FIG. **1**. The transaction storage **68** maintains a record of which calling station has connected to the rate provider, and in conjunction with the processing unit **60**, verifies all transactions, tracks telephone numbers, and maintains records and information such as when respective call rating devices are scheduled to call the rate provider. A real time clock **70** properly synchronizes timing of the processing unit **60**. The rate provider also includes a network interface **72** such as a modem or (T1 lines in some instances) for communicating with the call rating device **10** via the phone network, or perhaps with leased modem or phone lines.

In accordance with the present invention, the call rating device may also communicate through a local area network, especially when the call rating device and rate provider are associated with personal computers. Two computers could be connected via a data transfer line and the call rating device updated. The personal computer associated with the call rating device could be used to input data to a private branch exchange or other similar exchange. Additionally, the call rating device could be associated with a call accounting system used with a LAN network.

In the illustrated aspect of the invention, the call rating device is associated with a calling station, the debit phone **14** of FIG. **1**, and connected by network interface **52** to the telephone network. The calling station at the appropriate predetermined time set by the rate provider calls a 900 number and connects to the rate provider. The calling station that calls the 900 number will automatically be billed, and the rate provider will obtain the funds back from the telephone company. Thus, the system can provide an automatic billing system, minimizing the amount of expensive and complex files that the rate provider would have to generate, such as those normally associated with "toll-free" 800 numbers.

FIG. **3** illustrates another block diagram where the debit phone is connected to a personal computer using modems for network interfaces.

Referring now to FIGS. **4–8**, there are illustrated flowcharts showing operation of the call rating device and the rate provider. In the description that follows, the call rating device is described with reference to the debit phone as illustrated in FIG. **1**. The rate provider is typically associated with a computer such as illustrated in FIG. **1**. The references for each block will be described starting from the numeral one hundred (**100**) and sequentially following with mainly even numbers.

As shown in FIG. **4**, in block **100**, the call rating device **10** at some frequent interval of time checks the date and time which are maintained by the real time clock **48**. Based on the data stored in miscellaneous storage **46**, the call rating device **10** in block **100** and **102** determines whether it is time to call the rate provider **30** to determine if an updated billing schedule is required. The frequency of calls made in block **100** and **102** can vary depending on the location of the call rating device and the type of associated equipment. If it is not time to call the rate provider, then the processor **40** checks to see whether it is time to use any new rate table (block **104**) which may be stored in the new rate table storage **44**. The rate table is replaced (block **105**) if changes are required. If changes to the new rate table (block **104**) are not required, the call rating device returns to normal processing (block **106**).

If it is time to call the rate provider, then the subroutine, "Check For Update " is followed (block **110**), and the rate provider is called (block **120**). Typically the modem is initialized and information is sent which includes: (1) the phone number associated with the calling station of the call rating device; (2) the current date and time; and (3) the date

and time when the current rate table was substituted for a previous autorate table or first used (block **114**).

The rate provider **30** receives the information sent by the call rating device **10**. An update flag is generated and signals the call rating device processor whether an update is required. The rate provider has the intelligent capability to determine when each call rating device associated with a calling station should make any calls so that the calls can be staggered. This is essential in a large network to prevent overloading the rate provider.

The block of information includes the current date and time and the date and time when the calling rating device should make the next call to the rate provider. In block **118**, the date and time of the next call is stored and the information received from the rate provider is checked to determine if the database stored in the call rating device should be updated. If the database should be updated, the subroutine "Get Update" is followed in block **122**.

In block **124** a determination is first made whether a device is required by a user before an update is requested or during transmission of any information between the call rating device and rate provider. For example, in the debit phone of FIG. **1**, if the customer requires use of the debit phone, and any data is being downloaded, then any data transfer is terminated so that the customer may use the phone (block **124***a*). If the call rating device is associated with a computer which must be used, the data transfer is terminated. In block **126** the data is received from the rate provider typically as a block of data or packet which can be transmitted over the telephone network. Typically, some protocol such as X modem, Y modem, Z modem could be used to insure accurate transfer.

In block **128**, if the transfer of information is not adequate, then a retry count is incremented (block **130**), and data transfer is retried once again. If there have been too many retries (block **132**) then a flag initiating termination of retries is established (block **134**) and return is made to normal processing (block **136**). The number of retries in block **132** can be set to a predetermined amount such as three or four retries. If the number of retries has not reached the maximum, the "Get Update" routine is initiated.

In block **137**, the transferred data is stored. If more data is required (block **137***a*), the "Get Update" subroutine is initiated. If more data is not required, the effective date and time is received (block **139**) and stored (block **139***a*). The processor initiates an "Update Okay" flag (block **140**) and return is made to the normal processing routine. If the update was not proper (FIG. **5**, block **150**), then the date and time of the next call is not changed. The call rating device will keep calling at the proper intervals of time until it receives an update. If the update is okay, then the date and time of the next call is stored (block **152**). After the date and time is stored in, normal processing occurs (block **154**).

Referring now to FIGS. **7** and **8**, the call processing routines for the rate provider **30** are illustrated. As shown in FIG. **7**, the rate provider receives the update request from the call rating device (block **160**). It receives 1) the calling station's phone number; 2) the date and time of the last update; and 3) the current date and time (block **162**). The rate provider saves that information (block **164**) and then determines if the calling station with associated call rating device is a valid subscriber to the rate network (block **166**). If the number is not a valid subscriber, the call is terminated (block **168**) and the rate provider then waits for the next update request from another calling station (block **170**).

If the number received is a number for a valid subscriber (block **166**), then the rate provider sends the date and time of the next call to be made by that particular calling station (block **172**). If a newer rate table is available, (block **173**), then an update flag is initiated by the processing unit of the rate provider (block **174**) and the update is sent, illustrated in the "Send Update" subroutine of FIG. **8**.

As shown in FIG. **8**, the block of data is retrieved such as from the hard disk (block **180**) and the block of data is sent over the telephone network (block **182**). If the data transfer is not proper (block **184**), such as if a pay phone has terminated data transfer, then the data block is sent again (block **182**). This loop may repeat for several instances.

If the data transfer is proper, then verification is made whether more data should be sent, (block **186**). If more data should be sent, then further data is retrieved and transferred (block **180**). If more data does not need to be transmitted, then the effective data and time is transmitted (block **188**) and the update information is saved (block **190**) and stored in the accounting or transactional database **68**. Processing then returns to normal routine (block **192**).

If a newer rate table is not available (block **174**), then an "Update Not Required" flag is initiated (block **194**) and the call is terminated. The rate provider then waits for the update request (block **170**) from another call rating device.

The method and system of the present invention is advantageous because the growing telephone network has seen the outgrowth of various options such as debit telephones and least cost routing devices, which house rate tables that can be updated. Use of the 900 service to call a rate provider will simplify billing procedures as compared to more complex 800 toll free services.

It is to be understood that the above description is only one embodiment of the invention. Numerous other arrangements may be devised by one skilled in the art without departing from the spirit and skill of the invention.

That which is claimed is:

1. A method for updating a database that stores billing rate parameters for a call rating device used for cost determinations for a calling station, comprising the steps of

connecting at a predetermined time and date via a data transfer line the call rating device to a rate provider having billing rate parameters for a plurality of calling stations,

transmitting over the data transfer line indicia identifying the call rating device and the date and time of the last update of the billing rate parameters,

verifying if billing rate parameters should be updated, and

transmitting from the rate provider to the call rating device the updated billing rate parameters when the rate provider determines that an update is required.

2. The method according to claim **1** wherein the step of connecting via a data transfer line includes the step of connecting the call rating device to a telephone network via a modem and calling the rate provider.

3. The method according to claim **2** wherein the call rating device comprises a pay telephone.

4. The method according to claim **3** including the step of terminating the transfer of information between the rate provider and the pay telephone when the pay telephone is to be used.

5. The method according to claim **1** including terminating any data transfer between the call rating device and the rate provider when the call rating device is to be used.

6. The method according to claim **1** including storing the updated billing rate parameters in the call rating device after receiving the billing rate parameters, and substituting the updated parameters into the database at a later predetermined time.

7. The method according to claim 1 including the step of reattempting data transfer from the rate provider to the call rating device if the initial rate data was not transferred properly, and terminating the reattempts to transfer data after a predetermined number of attempts to transfer data have been made.

8. The method according to claim 1 including the step or updating the time and date for connecting to the rate provider.

9. The method according to claim 1 including reattempting data transfer when the data has not transferred properly.

10. The method according to claim 1 wherein the connecting step of claim 1 includes the step of calling a 900 number.

11. A method for updating a database that stores billing rate parameters for a call rating device associated with a calling station operatively connected to a telephone network, comprising

calling at a predetermined date and time a rate provider having billing rate parameters for a plurality of calling stations so as to connect between the calling station with the associated call rating device and the rate provider,

transmitting over the telephone network to the rate provider the phone number of the calling station and the date and time of the last update of the billing rate parameters,

verifying if the billing rate parameters should be updated, and

transmitting over the telephone network to the calling station the updated billing rate parameters when the rate provider determines that a database update is required.

12. The method according to claim 11 including the step of calling the rate provider at regular intervals of time.

13. The method according to claim 11 including the step of receiving from the rate provider a calling station time schedule for calling the rate provider for updated billing rate information at a predetermined time.

14. The method according to claim 11 wherein the calling station comprises a pay telephone and including the step of terminating the transfer of information between the rate provider and the pay telephone when the pay telephone is to be used.

15. The method according to claim 11 including the step of verifying the accuracy of the transfer of information between the calling station and the rate provider.

16. The method according to claim 11 including the step of reattempting data transfer from the rate provider to the call rating device if the initial data was not transferred properly, and terminating the attempt to transfer data after a predetermined number of attempts to transfer data have been made.

17. The method according to claim 11 including the step of downloading the rate information to the database via a modem.

18. The method according to claim 11 wherein the call rating device comprises a least cost rating device.

19. The method according to claim 11 including storing the updated billing rate parameters in the call rating device after receiving the parameters, and substituting the updated parameters into the database at a later predetermined time.

20. The method according to claim 11 including the step of updating the time and date for connection to the rate provider.

21. The method according to claim 11 including reattempting data transfer when the data has not transferred properly.

22. The method according to claim 11 wherein the connecting step of claim 1 includes the step of calling a 900 number.

23. A method for updating subscriber databases that store billing rate parameters for call rate devices which are associated with respective subscriber calling stations operatively connected to a telephone network, comprising the steps of

each subscriber station calling at a scheduled time a rate provider having billing rate parameters for each calling station, wherein the scheduled time for each call is such that the calls from each calling station are substantially spaced apart in time from each other,

each station transmitting over the telephone network the respective phone number of its station and the date and time of the last update of the billing rate parameters,

verifying in the rate provider that an update is required, and

transmitting over the telephone network from the rate provider to the calling station the updated billing rate parameters when an update is required.

24. The method according to claim 23 including the step of calling the rate provider at regular intervals of time.

25. The method according to claim 23 including the step of receiving from the rate provider device a calling station time schedule for calling the rate provider for updated information.

26. The method according to claim 23 wherein the calling station comprises a pay telephone and including the step of terminating the transfer of information between the rate provider device and the pay telephone when the pay telephone is to be used.

27. The method according to claim 23 including the step of verifying the accuracy of the transfer of information between the calling station and the rate provider device.

28. The method according to claim 23 including the step of reattempting to transfer data from the rate provider to the calling station if the initial data was not transferred properly, and terminating the attempt to transfer data after a predetermined number of attempts to transfer data have been made.

29. The method according to claim 23 including the step of downloading the rate information to the database via a modem.

30. The method according to claim 23 including verifying that a calling party is a subscriber.

31. The method according to claim 23 including storing the updated billing rate parameters in the call rating device after receiving the update billing rate parameters, and substituting the updated billing rate parameters into the current database at a later predetermined time.

32. The method according to claim 23 including the step of updating the time and date for connecting to the rate provider.

33. The method according to claim 23 including the step of reattempting data transfer when the data has not transferred properly.

34. The method according to claim 23 wherein the connecting step of claim 24 includes the step of calling a 900 number.

35. A call rating updating system comprising

a call rating device, including a database that stores current updated billing rate parameters used for cost determinations for a calling station,

a data transfer line operatively connected to the call rating device,

means for transmitting over the data transfer line indicia information identifying the call rating device and update information identifying the last update of the billing rate parameters, and

a rate provider operatively connected to said data transfer line, said rate provider including

a) a database having updated billing rate parameters for a plurality of calling stations,

b) means for receiving the information from the call rating device,

c) means for verifying if billing rate parameters should be updated, and

d) means transmitting from the rate provider to the call rating device the updated billing rate parameters when the rate provider determines that an update is required.

36. The system according to claim **35** wherein said data transfer line comprises a switched communication path of a telephone network.

37. The system according to claim **35** wherein the call rating device comprises a pay telephone.

38. The system according to claim **35** including means for terminating the transfer of information between the rate provider and the call rating device when the device is to be used.

39. The system according to claim **35** wherein said call rating device comprises a least cost rating device.

40. The system according to claim **35** including modem means for connecting the call rating device and rate provider to the data transfer line.

41. The system according to claim **35** wherein said call rating device includes means for storing the updated billing rate parameters in the call rating device after receiving the updated billing rate parameters, and means for substituting the updated parameters into the current database at a later predetermined time.

42. The system according to claim **35** wherein the rate provider is connected via a 900 number.

43. A system for updating a database having billing rate parameters for determining the cost of telephone calls originating from a calling station to a destination calling station via a telephone network, comprising

a calling station operatively connected to the telephone network, and including database means associated with the calling station for storing billing rate parameters for determining the cost of the phone call, and including means for transmitting over the telephone network information identifying the phone number of the calling station and the date and time of the last update of the billing rate parameters,

rate providing means operatively connected to the phone network for storing billing rate parameters for calling stations, said rate providing means including means for receiving said information from the calling station, said rate providing means including:

a) control means for determining whether the calling party database should be updated, and

b) means for transmitting updated billing rate parameters to the calling party when an update is required.

44. The system according to claim **43** wherein the call rating device comprises a least cost rating device.

45. The system according to claim **43** wherein said means for transmitting information from the calling station includes a modem.

46. The system according to claim **43** wherein said means for transmitting updated billing rate parameters to the calling station includes a modem.

47. The system according to claim **43** wherein said calling station comprises a pay telephone, and including means for terminating any transfer of information between said pay telephone and said rate providing means when said pay telephone is to be used.

48. The system according to claim **43** wherein the rate provider is connected via a 900 number.

* * * * *

US005519769C1

(12) **REEXAMINATION CERTIFICATE** (4583rd)

United States Patent
Weinberger et al.

(10) **Number: US 5,519,769 C1**
(45) **Certificate Issued: May 28, 2002**

(54) **METHOD AND SYSTEM FOR UPDATING A CALL RATING DATABASE**

(75) Inventors: **Gerald J. Weinberger**, Smithtown; **Roger C. Lee**, Wading River, both of NY (US)

(73) Assignee: **Rates Technology Inc.**, Smithtown, NY (US)

Reexamination Request:
No. 90/005,473, Aug. 31, 1999

Reexamination Certificate for:

Patent No.:	**5,519,769**
Issued:	**May 21, 1996**
Appl. No.:	**08/223,082**
Filed:	**Apr. 4, 1994**

(51) **Int. Cl.**[7] **H04M 15/00**
(52) **U.S. Cl.** **379/112**; 379/111; 379/113; 379/114; 379/115; 379/130; 379/131; 379/132
(58) **Field of Search** 379/111, 112, 379/113, 114, 115, 116, 130, 131, 132, 88, 104, 105, 106

(56) **References Cited**

U.S. PATENT DOCUMENTS

5,161,109	A	11/1992	Keating et al.	364/464.02
5,212,789	A	5/1993	Rago	395/600
5,473,630	A	12/1995	Penzias et al.	375/114
5,515,425	A	5/1996	Penzias et al.	379/114
5,799,071	A	8/1998	Azar et al.	379/113

FOREIGN PATENT DOCUMENTS

EP	0 586 157 A2	3/1994	.....	G06F/15/403

OTHER PUBLICATIONS

Communiqué Telecommunications, Inc. (Ontario, California), "Customized Telemiser Selects Low–Cost Routing," *Computerworld,* vol. XVIII, No. 48, Nov. 28, 1983, p. 109 (plus cover page and contents page).
Communiqué Telecommunications, Inc. (Ontario, California), "Least–Cost Router," *Telecommunications,* vol. 18, No. 1, Jan., 1984, p. 92 (plus cover page and contents page).
Communiqué Telecommunications, Inc. (Ontario, California), "How to Make the Least of Your Long Distance Phone Bill," *Communications News,* vol. 21, No. 9, Sep. 1984, p. 171 (plus cover page).
Communiqué Telecommunications, Inc. (Ontario, California), "How to Make the Least of Your Long Distance Phone Bill," *Sports Illustrated,* Oct. 1, 1984, p. 113 (plus cover page).
CALLMISER Trademark File History (Registration No. 1725288; Registration Date Oct. 20, 1992; International Class 9).

Primary Examiner—Vijay Shankar

(57) **ABSTRACT**

A method and system for updating a database stores billing rate parameters for call rating devices associated with a calling station. The calling station calls at a predetermined date and time a rate provider, which includes billing rate parameters for a plurality of calling stations. The call rating device transmits over the telephone network to the rate provider the phone number of the calling station, and the date and time of the last updated database. The rate provider verifies that the billing rate parameters of the calling station should be updated, then transmits back over the telephone network to the calling station the updated database. The rate provider also sends data as to the new date and time for the call rating device to place a call to the rate provider.

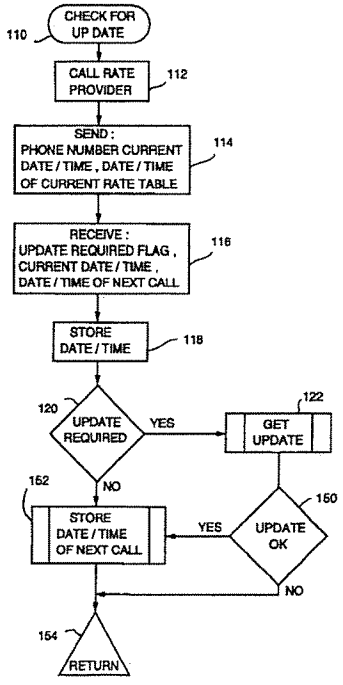

REEXAMINATION CERTIFICATE ISSUED UNDER 35 U.S.C. 307

THE PATENT IS HEREBY AMENDED AS INDICATED BELOW.

Matter enclosed in heavy brackets [ ] appeared in the patent, but has been deleted and is no longer a part of the patent; matter printed in italics indicates additions made to the patent.

AS A RESULT OF REEXAMINATION, IT HAS BEEN DETERMINED THAT:

The patentability of claims **1–48** is confirmed.

New claims **49–53** are added and determined to be patentable.

49. A method for updating a database that stores billing rate parameters for a call rating device used for cost determinations for a calling station, comprising the steps of

connecting at a predetermined time and date via a data transfer line the call rating device to a rate provider having billing rate parameters for a plurality of calling stations,

transmitting over the data transfer line indicia identifying the call rating device and the date and time of the last update of the billing rate parameters,

verifying if billing rate parameters should be updated based on said transmitted last update indicia, and

transmitting from the rate provider to the call rating device the updated billing rate parameters when the rate provider determines that an update is required.

50. A method for updating a database that stores billing rate parameters for a call rating device associated with a calling station operatively connected to a telephone network, comprising

calling at a predetermined date and time a rate provider having billing rate parameters for a plurality of calling stations so as to connect between the calling station with the associated call rating device and the rate provider,

transmitting over the telephone network to the rate provider the phone number of the calling station and the date and time of the last update of the billing rate provider,

verifying if the billing rate parameters should be updated based on said transmitted last update information, and

transmitting over the telephone network to the calling station the updated billing rate parameters when the rate provider determines that a database update is required.

51. A method for updating subscriber databases that store billing rate parameters for call rate devices which are associated with respective subscriber calling stations operatively connected to a telephone network, comprising the steps of

each subscriber station calling at a scheduled time a rate provider having billing rate parameters for each calling station, wherein the scheduled time for each call is such that the calls from each calling station are substantially spaced apart in time from each other,

each station transmitting over the telephone network the respective phone number of its station and the date and time of the last update of the billing rate parameters,

verifying in the rate provider that an update is required based on said transmitted last update information, and

transmitting over the telephone network from the rate provider to the calling station the updated billing rate parameters when an update is required.

52. A call rating updating system comprising

a call rating device, including a database that stores current updated billing rate parameters used for cost determination for a calling station,

a data transfer line operatively connected to the call rating device, means for transmitting over the data transfer line indicia information identifying the call rating device and update information identifying the last update of the billing rate parameters, and

a rate provider operatively connected to said data transfer line, said rate provider including

(a) a database having updated billing rate parameters for a plurality of calling stations,

(b) means for receiving the information from the call rating device,

(c) means for verifying if billing rate parameters should be updated based on said received last update information, and

(d) means transmitting from the rate provider to the call rating device the updated billing rate parameters when the rate provider determines that an update is required.

53. A system for updating a database having billing rate parameters for determining the cost of telephone calls originating from a calling station to a destination calling station via a telephone network, comprising

a calling station operatively connected to the telephone network, and including database means associated with the calling station for storing billing rate parameters for determining the cost of the phone call, and including means for transmitting over the telephone network information identifying the phone number of the calling station and the date and time of the last update of the billing rate parameters,

rate providing means operatively connected to the phone network for storing billing rate parameters for calling stations, said rate providing means including means for receiving said information from the calling station, said rate providing means including:

(a) control means for determining whether the calling party database should be updated based on said received last update information; and

(b) means for transmitting updated billing rate parameters to the calling party when an update is required.

* * * * *

Exhibit C

Civil Action No. 07-441 JJF

Rates Technology Inc

January 31, 2007

FACSIMILE AND OVERNIGHT MAIL

K. Paul Singh, Chmn. & CEO
John F. DePodesta, Esq.- Exec. VP & Chief Legal Officer
Primus Telecommunications Group, Inc.
7901 Jones Branch Drive, Suite 900
McLean, VA 22102

Dear Mssrs. Singh and DePodesta,

This letter is provided as a part of settlement discussions and may not be used for any other purpose. Any offer contained herein is for settlement purposes only, and may not be used as evidence pursuant to Fed. R. Evid. 408 and all similar statutes and legal rules.

Some time ago I spoke with Ravi Bhatia about your Lingo services, and your ATA devices, among other items. I am surprised at the lack of escalation of our matter and also surprised that your SEC filings do not properly report the contingent liability regarding the Rates Technology Inc. (" RTI") patents. We have reviewed and tested Primus Telecommunications Group (hereinafter referred to as "Primus") services and products, and we have concluded that one or more of your services and products do indeed infringe one or more claims of each of Rates Technology Inc. U.S. Pat. No. 5,425,085 and U.S. Pat. No. 5,519,769 (the "Patents"). Your VoIP Lingo services and the products which support that service do clearly infringe the RTI Patents. Please accept this letter as our patent infringement notice. We have proceeded to obtain written patent infringement opinions.

Should we not be able to timely address and reasonably resolve these patent infringement allegations, RTI is prepared to institute patent infringement litigation against your company in order to obtain all of its just remedies for Primus's making, using, selling, offering for sale, and importing the infringing products and services, including the award of damages, legal fees, a permanent injunction against your further infringement during the lives of the patents, and the recall of all examples of the infringing products. We believe there is a strong likelihood that RTI would prevail in the litigation and the damages, trebled for your willful Patents infringement, will be measured in the hundreds of million of dollars. But, please be clear, RTI prefers an amicable resolution consistent with those terms and conditions afforded to other companies of your size within your field.

The VoIP field of companies generally encompasses traditional telephone companies, mobile voice messengering companies (the Internet companies), ITSP companies, cable voice companies, soft switch companies, and those equipment companies who provide IP PBX's, IP Phones, gateways, edge routers, dual mode cellphones, ATA adapters, voice modems, and VoIP chips.

RTI
Rates Technology

RTI has covered more than 140 companies in the VoIP field, and most without the necessity to litigate. We hope that RTI's offer to afford Primus Patents coverage for the US, or for "worldwide" (United States, Canada, Mexico, and Japan), on terms and conditions consistent with those other companies in the field and consistent with your competitors will be a subject for discussion between the parties and that such will be the preferred means by which we both seek to resolve these patent infringement allegations.

RTI is one of the most respected and significant IP patents firms in the country and is well regarded for its one-time payment tiered pricing structure which is based upon the size of the most senior parent company as measured by its annual sales. RTI does not charge onerous royalty percentages, and seeks only a one-time payment for Patents coverage pursuant to a Covenant Not to Sue settlement agreement. Over the past fifteen (15) years RTI has under several other of its patents covered more than 700 tele-communications companies. Only rarely has RTI been forced to utilize the Federal Courts to effect resolution of its willful patent infringement allegations.

Many companies in the VoIP field have already been afforded coverage under these RTI patents. Some of the companies already covered under the RTI Patents are many of the traditional telephone companies, many of the Internet companies, 3Com, Acer, Agere, Artisoft, Avaya, Cellco, Centrepoint Technologies, Cingular, Cisco System, Comdial, Dialpad, Dell, Epygi Technologies, IBM, Huawei Technologies, Lucent Technologies, Matsushita Electric Works (Panasonic), Mitel Networks, Quintum, SBC, Sharp, SunRocket, SysMaster Corp., Uniden, VoiceWing, Vodavi, VoIP Inc., VTech and Zarlink.

I would appreciate that you call me at the captioned telephone number as soon as possible so that we may discuss this matter in greater detail, and so that RTI may provide you with pricing information. Again, RTI much prefers an amicable out of Court resolution, so I look forward to the courtesy of receiving your timely response.

Very truly yours,

Gerald J. Weinberger
President

GJW: lt

cc: JB Hicks, Esq.- BWS
D Lazer, Esq.- LARY
/litig

Exhibit D

Civil Action No. 07-441 JJF

RTI
Rates Technology Inc

****

THIS COMMUNICATION IS CONFIDENTIAL AND INTENDED ONLY FOR THE ADDRESSEE. ANY USE, DISTRIBUTION OR DUPLICATION BY ANYONE OTHER THAN THE ADDRESSEE IS STRICTLY PROHIBITED. IF YOU RECEIVE THIS TELECOPY IN ERROR, PLEASE CALL US IMMEDIATELY AT THE NUMBER BELOW.

****

TELECOPY TRANSMISSION

TO: Kathleen Lawrence

FROM: Jerry Weinberger

TELECOPY: 703-902-2814

NO. OF SHEETS TO FOLLOW: 8

DATE: 2/27/07

SPECIAL INSTRUCTIONS: Per your discussion with Mr. Weinberger

IF THERE ARE ANY PROBLEMS REGARDING THIS TRANSMISSION, PLEASE CALL LINDA AT (631) 360-0157.

Fairfield Village Plaza
50 Route 111 • Suite 210 • Smithtown, NY 11787

Rates Technology Inc.

February 27, 2007

FACSIMILE AND FIRST CLASS MAIL

K. Paul Singh, Chmn. & CEO
John F. DePodesta, Esq.- Exec. VP & Chief Legal Officer
Primus Telecommunications Group, Inc.
7901 Jones Branch Drive, Suite 900
McLean, VA 22102

Dear Mssrs. Singh and DePodesta,

This letter is provided as a part of settlement discussions and may not be used for any other purpose. Any offer contained herein is for settlement purposes only, and may not be used as evidence pursuant to Fed. R. Evid. 408 and all similar statutes and legal rules.

You have both provably received my January 31, 2007 letter. I have called each of you several times within the last few weeks and neither of you has yet had the business common sense courtesy to return my call. We see this as a refusal to speak with me on no fewer than six occasions.

We interpret your actions as a confirmation that you, as the authorized parties to speak for Primus Telecommunications Group, Inc. (hereinafter referred to as "Primus"), prefer litigation as the exclusive means to resolve the Rates Technology Inc. ("RTI") allegations regarding the willful patents infringement by the Primus services and products.

Originally, we had wanted to treat Primus in a manner consistent with all of those other companies in the telecommunications area, and consistent with those companies with whom you compete. RTI had sought simply to address its patents infringement claims against Primus by giving Primus the same treatment as those companies who have afforded themselves coverage under the RTI patents. Your company's actions, and your personal actions, now dictate our response.

In litigation Primus will face the very real risk of a permanent injunction against your provision of your infringing services and products, the prospect of a significant damages award, the recall of all examples of the infringing services and products, among other remedies the court may award to RTI. We believe that you will face the certainty to expend more than $2 Million and substantial employee and executive officer time in your defense. In the end it is reasonably likely that you will have to pay RTI's legal expenses. And, even in the very unlikely event that you were to prevail, there is no possibility that you would be able to recover your legal expenses. Litigation for Primus is certainly a lose-lose proposition. RTI believes that it will prove Primus's willful infringement. Your intentional refusal to speak with RTI or in any way deal with these issues is at best foolhardy. Please act upon this letter, and use some common sense business logic, and make sure that you and the executive officers of Primus address these matters within the next ten days.

Rates Technology

Failing your timely response RTI will have no choice except to initiate the patent infringement litigation. We caution you and Primus, now, that once litigation has commenced and service has been effectuated RTI will proceed *only* to obtain all of its requested remedies by way of final adjudication.

We do hope to hear from you soon, as litigation is not RTI's preferred course. Please govern your actions accordingly.

Very truly yours,

Gerald J. Weinberger
President

GJW: lt

cc: JB Hicks, Esq.- HP
RL Epstein, Esq.-EDBJ
D Lazer, Esq.- LARY
J Rosen, Esq.-LARY
/litig

Exhibit E

Civil Action No. 07-441 JJF

primus.

April 23, 2007

Gerald J. Weinberger
President
Rates Technology, Inc.
Fairfield Village Plaza
50 Route 111, Suite 210
Smithtown, NY 11787

Re: U.S. Patent Nos. 5,425,085 and 5,519,769

Dear Mr. Weinberger:

I write in response to your April 19, 2007 email (attached). Primus Telecommunications Group, Incorporated ("Primus") has consistently asked Rates Technology Inc. ("RTI") to explain how it has any basis to allege that any Primus product practices any claim of U.S. Pat. Nos. 5,424,085 or 5,519,769 – information RTI must possess under Federal Rule of Civil Procedure 11. RTI has consistently refused to do so. Instead, RTI argues that Primus does not need an explanation because RTI is willing to license these patents for less than Primus's cost of defense. I suggest to you, Mr. Weinberger, that this response is neither good faith nor fair dealing.

To further demonstrate Primus *bona fides* in this matter, it appears clear to us that no Primus product practices the limitations reciting "a network … normally providing a current to said first telephone when said first telephone is in use," "switch means … for disconnecting said first telephone from said network" and "means … for generating a current through said switch means to the first telephone, corresponding to a current provided by said network." These limitations require a switch circuit that is capable of connecting a first telephone alternatively to either a first current source provided by a telephone network, or to a second current source generated by the claimed device that is equal to but separate from the network provided current. *See, e.g.*, '085 patent, col. 1, l. 66 to col. 2, l. 1; col. 3, ll. 54-61; col. 4, ll. 22-27; col. 5, ll. 22-25; Fig. 2. This requirement exists in all of the '085 patent claims.

There is no connection between any Primus equipment and any subscriber telephone except through an Analog Telephone Adapter (ATA) device. No Primus ATA is capable of switching between a network generated current supplied to a subscriber telephone and a second current source generated by the ATA itself that is equal to but separate from the network current. Indeed, Primus ATA devices have no structure that is anything like the "switch" required by the '805 patent's claims. As such, Primus's products cannot literally practice the '085 patent's claims.

Moreover, this very same "switch" lacking in Primus's ATA devices was at the core of the supposed '085 invention. RTI specifically amended the '085 claims during prosecution to overcome a § 102(b) rejection – adding the limitation to a network "normally providing a current to said first telephone when said first telephone is in use." Arguing for patentability, RTI told the Examiner that "Applicants' device includes a switch which disconnects the telephone from the network while the least cost route for a call is determined. During the period when the telephone is disconnected from the network, the internal current source of Applicants' device is connected to the telephone through the switch to energize same." *See* '085 File History, Amendment dated Nov. 14, 1994 at 2-3 and 10. Indeed, after identifying the

"switch means … for disconnecting said first telephone from said network" and "means … for generating a current" claim limitations, RTI argued the prior art "does not teach any element capable of meeting either of these limitations." *Id.* at 10-11. Having amended its claims and argued novelty over the prior art based expressly upon these limitations, RTI cannot invoke the doctrine of equivalents to reach Primus's ATA devices. *Festo Corp.* v. *Shoketsu Kinzoku Kabushiki Co.*, 535 U.S. 722, 734 (2002); *Gaus* v. *Conair Corp.*, 363 F.3d 1284, 1291 (Fed. Cir. 2004). In any event, the absence of current switching means in Primus's ATA cannot be equivalent to the requirement for such means in the '085 patent's claims. *Asyst Techs.* v. *EMTRAK, Inc.*, 402 F.3d 1189, 1195 (Fed. Cir. 2005); *Novartis Pharm. Corp.* v. *Abbott Laboratories*, 375 F.3D 1328, 1339 (Fed. Cir. 2004); *Searfoss* v. *Pioneer Consolidated Corp.*, 374 F.3d 1142, 1151 (Fed. Cir. 2004); *Moore U.S.A., Inc.* v. *Standard Register Co.*, 229 F.3d 1091, 1106 (Fed. Cir. 2000).

Likewise, every claim of the '769 patent requires (in some form of words) updating a database that stores billing rate parameters by "connecting at a predetermined time and date via a data transfer line the call rating device to a rate provider having billing rate parameters…." *E.g.*, '769 claim 1. The Primus ATA devices do not contain a database that stores billing rate parameters. Nor does a rate parameter database updated "at a predetermined time and date via a data transfer line" exist in any Primus equipment. Accordingly, it seems clear to us that no Primus product practices any '769 patent claim either literally or by equivalents.

If RTI is acting in good faith, as you claim, please provide all basis RTI has for its apparent contention that a device of Primus practices the "means … for generating current" limitation of the '085 patent claims and the "predetermined time and date" limitation of the '769 patent claims. This should be easy for RTI to do if it has in fact "tested the products and services, and obtained its formal patent infringement reports" as you contend. Such a showing of good faith would provide Primus with some basis to believe RTI is sincere in its professed desire to amicably settle this matter. If RTI can demonstrate a basis to believe any Primus product practices these limitations, then I would propose we schedule a meeting of principals at which RTI can present its case (including any "claim charts" or test "reports" referenced in your email) and we can attempt to reach some mutually acceptable resolution.

You have asked who will represent Primus in this matter. We will be represented by Wilmer, Cutler, Pickering, Hale and Dorr LLP. If you have any questions you wish to direct to WilmerHale, please contact either James L. Quarles III ((202) 663-6236) or James M. Dowd ((202) 663-6375).

Very truly yours,

John F. DePodesta

John F. DePodesta

Cc : James B. Hicks
James L. Quarles III

Exhibit F

Civil Action No. 07-441 JJF

RTI
Rates Technology inc.

****

THIS COMMUNICATION IS CONFIDENTIAL AND INTENDED ONLY FOR THE ADDRESSEE. ANY USE, DISTRIBUTION OR DUPLICATION BY ANYONE OTHER THAN THE ADDRESSEE IS STRICTLY PROHIBITED. IF YOU RECEIVE THIS TELECOPY IN ERROR, PLEASE CALL US IMMEDIATELY AT THE NUMBER BELOW.

****

TELECOPY TRANSMISSION

TO: James Dowd

FROM: Jerry Weinberger

TELECOPY: 202-663-6375

NO. OF SHEETS TO FOLLOW: 3

DATE: 4/26/07

SPECIAL INSTRUCTIONS:

IF THERE ARE ANY PROBLEMS REGARDING THIS TRANSMISSION, PLEASE CALL LINDA AT (631) 360-0157.

Fairfield Village Plaza
50 Route 111 • Suite 210 • Smithtown, NY 11787
(631) 360-0157 FAX (631) 360-0570



April 26, 2007

FACSIMILE AND FIRST CLASS MAIL

John F. DePodesta, Esq.- Exec. VP & Chief Legal Officer
Primus Telecommunications Group, Inc.
7901 Jones Branch Drive, Suite 900
McLean, VA 22102

Dear Mr. DePodesta,

This letter is provided as a part of settlement discussions and may not be used for any other purpose. Any offer contained herein is for settlement purposes only, and may not be used as evidence pursuant to Fed. R. Evid. 408 and all similar statutes and legal rules.

This letter responds further to your last entirely off-base letter. In addition to your unacceptable stalling, stonewalling and obfuscation, you and your attorneys accuse RTI of making patent allegations against Primus's services and products in bad faith.

Your letter shows that you and your counsel simply dismiss all logic and decry that Primus could not possibly infringe the RTI patents. Your failure to timely address these matters and your "ostrich defense" make it incxorably apparent that RTI's willful patent infringement claims can be timely addressed only in a court of competent jurisdiction. RTI will not stand back and permit that you and your unprofessional and unthinking and patent counsel be allowed to stand in as judge and jury regarding these very serious matters.

Regarding the language added into the preamble of claim 1 ("...normally providing a current to said first telephone when said first telephonic is in use,") you apparently misunderstand the meaning of that phrase. The inserted language refers to the device for routing telephone calls as providing current to the calling telephone, not the "network".

The specification and drawings of the RTI patent make it clear that the calling telephone is connected to and receives current from the routing device when the calling telephone is in use. In the patent, the calling telephone is never connected directly to the network. There is no basis for interpreting the claim to require that the calling telephone be powered by the "network" when in use. The claim language plainly requires that the routing device, in this case the Primus product itself or in conjunction with associated equipment (the "Primus system"), provide current to the calling telephone, which it clearly does.

With respect to the switch means, it cannot be disputed that the Primus system is capable of routing calls using VoIP to telephones capable of receiving digitized signals as well as routing calls through the PSTN to telephones that are not capable of receiving digitized signals. Given that, there must be a switch in the Primus system that disconnects the

Fairfield Village Plaza
50 Route 111 • Suite 210 • Smithtown, NY 11787
(631) 360-0157 FAX (631) 360-0570

Rates Technology

calling telephone from the PSTN when the call is routed using VoIP to a telephone capable of receiving digitized signals. That switch connects the calling telephone to the PSTN when the call is directed to a telephone that is not capable of receiving digitized signals.

Finally, the current generating means is present in the Primus system, as well. The ATA which connects the calling telephone to the remainder of the system receives its power from an external 120 volt alternating current power source, which may for example be a wall outlet. The ATA takes that alternating current and converts it to a direct current that corresponds to the direct current provided by a telephone company central office. The ATA then provides the direct current to the calling telephone.

Your assertion that the claims require a switch circuit that is capable of connecting a first telephone alternatively to either a first current source provided by a telephone network, or a second current source generated by the claimed device that is equal to but separate from the network provided current, is simply incorrect. The claims include no such limitation.

Further, if that is your understanding of how the device described in the RTI patent operates, that understanding is not technically incorrect. I suggest you consult someone familiar with the operation of a telephone connected to a telephone company central office.

In any case, a similar interpretation has been presented and rejected in a prior litigation involving the RTI patent (Mediacom Corporation v. Rates Technology, Inc. (sic) Civil Action No. 97-10559-WGY) in the U.S. District Court for the District of Massachusetts. In that case, it was decided by Judge Young, after a Markman hearing in part relating to the meaning of the term "disconnected" in the claim, that:

> ... Rather, the term "disconnecting" in the context of this patent refers to the interruption of the electrical circuit between the telephone and the network. In the preferred embodiment, the disconnecting is accompanied by the establishment of other circuits; one between the telephone and the device, and another between the device and the network. Those aspects of the preferred embodiment, however, are not claimed as part of the invention. An accused device may, but need not, contain a mechanism for establishing an alternate connection. The Court therefore construes the "disconnecting" element of Claim 1 of the `085 patent to require the interruption -- the breaking or opening -- of the electrical circuit between the telephone jack and the network. (at page 12)

What is happening in the patented device is that the signaling function of the calling telephone is disconnected from the network during the route selection process by providing artificial dial tone to the central office. However, all that is required by the

Rates Technology

claim is that the electrical circuit between the calling telephone and the network be interrupted. That is clearly what is happening in the Primus system.

Finally, regarding your remark about equivalency, in view of the above, it should be apparent that RTI does not need to rely on the Doctrine of Equivalents to demonstrate infringement of the Primus system. However, it is RTI's position that such an approach is available, should RTI choose to proceed under that theory of infringement.

While I personally believe that it will serve no useful purpose RTI wanted to respond to your letter which exposes Primus' "no way in h--- could Primus be infringing" stance as being entirely incorrect and which possibly was uttered in bad faith. You really ought to stop making these irrational, incorrect, self-serving statements, as they only serve to confirm our belief that RTI will not be able to timely reasonably discuss these matters, with Primus, and therefore they serve to confirm the necessity for RTI to litigate in order to obtain its requested remedies.

Please govern your actions accordingly.

Very truly yours,

Gerald J. Weinberger
President

GJW: lt

cc: J Dowd, Esq.- Wilber Hale
K. Paul Singh, Chmn. & CEO
JB Hicks, Esq.- HP, LLC.
RL Epstein, Esq.-EDBJ
/litig

Exhibit G

Civil Action No. 07-441 JJF

4 F.Supp.2d 17
(Cite as: 4 F.Supp.2d 17)

MediaCom Corp. v. Rates Technology, Inc.
D.Mass.,1998.

United States District Court,D. Massachusetts.
MEDIACOM CORPORATION, Plaintiff,
v.
RATES TECHNOLOGY, INC., Defendant.
Civil Action No. 97-10559-WGY.

April 16, 1998.

Product owner commenced a declaratory judgment action seeking a declaration that the product did not infringe a patent claiming a device for automatically routing telephone calls to the carrier offering the least expensive rates for each particular call, and a patent claiming a method for automatically updating the database of calling rates used by such a call rating device. The defendant patent holder counterclaimed, alleging infringement of both patents. On the owner's motions for summary judgment, the District Court, Young, J., held that: (1) where the court lacked an adequate basis in skill or knowledge of the relevant art to draw definitive conclusions as to proper construction of a claim, parties would be directed to agree upon appropriate artisan to advise the court; (2) claim element specifying a connection to a telephone rate provider at a "predetermined date and time" neither identified nor had to identify who determined the date and time; (3) claim referring to subscriber station calling a rate provider at a "scheduled time" encompassed a method in which the time for calling was determined and planned so as to ensure substantial intervals of time between each call received by the provider; (4) claim according to which an apparatus would be required to transmit from a telephone rate provider to a call rating device "updated billing rate parameters" encompassed transmission of complete new tables, or, in the alternative, additions, deletions, or modifications to existing rate tables; and (5) genuine issues of material fact precluded summary judgment of noninfringement as to claims of the patent for the database updating method.

Motions remaining under advisement and denied accordingly.

West Headnotes

[1] Federal Civil Procedure 170A ⚿2508

170A Federal Civil Procedure
170AXVII Judgment
170AXVII(C) Summary Judgment
170AXVII(C)2 Particular Cases
170Ak2508 k. Patent Cases. Most Cited Cases

Patents 291 ⚿323.2(1)

291 Patents
291XII Infringement
291XII(C) Suits in Equity
291k323 Final Judgment or Decree
291k323.2 Summary Judgment
291k323.2(1) k. In General. Most Cited Cases

A summary judgment motion is an appropriate vehicle in which to conduct a *Markman* hearing to determine the proper construction of patent claims. Fed.Rules Civ.Proc.Rule 56, 28 U.S.C.A.

[2] Patents 291 ⚿323.2(1)

291 Patents
291XII Infringement
291XII(C) Suits in Equity
291k323 Final Judgment or Decree
291k323.2 Summary Judgment
291k323.2(1) k. In General. Most Cited Cases

Patent infringement analysis in summary judgment context should be no different than with ordinary summary judgment motions, except that, because patent claims often implicate technical or highly specialized knowledge, courts will typically require more assistance than they otherwise do in

© 2007 Thomson/West. No Claim to Orig. U.S. Govt. Works.

pronouncing the law (claim construction), though once the claims have been construed, the arguments as to disputes of fact (infringement), proceed in the customary manner; the two questions need not be procedurally separated, but the analytic distinction must be maintained. Fed.Rules Civ.Proc.Rule 56, 28 U.S.C.A.

[3] Federal Civil Procedure 170A ⚿2508

170A Federal Civil Procedure
170AXVII Judgment
170AXVII(C) Summary Judgment
170AXVII(C)2 Particular Cases
170Ak2508 k. Patent Cases. Most Cited Cases

Patents 291 ⚿323.2(4)

291 Patents
291XII Infringement
291XII(C) Suits in Equity
291k323 Final Judgment or Decree
291k323.2 Summary Judgment
291k323.2(4) k. Affidavits or Other Evidence. Most Cited Cases
In the summary judgment context, there is no reason to receive expert opinion by way of affidavits or testimony on the question of patent claim construction; even the most learned expert cannot supplant the court in its task of interpreting the written document, nor can the court simply choose from among the proffered interpretations without conducting its own independent analysis firmly grounded in an adequate understanding of the subject matter of the patent. Fed.Rules Civ.Proc.Rule 56, 28 U.S.C.A.

[4] Patents 291 ⚿324.5

291 Patents
291XII Infringement
291XII(C) Suits in Equity
291k324 Appeal
291k324.5 k. Scope and Extent of Review in General. Most Cited Cases
The district court's patent claim construction, enlightened by such extrinsic evidence as may be helpful, is still based upon the patent and prosecution history, and is therefore still construction, and is a matter of law subject to de novo review.

[5] Patents 291 ⚿323.2(4)

291 Patents
291XII Infringement
291XII(C) Suits in Equity
291k323 Final Judgment or Decree
291k323.2 Summary Judgment
291k323.2(4) k. Affidavits or Other Evidence. Most Cited Cases
In the summary judgment context, the use of extrinsic evidence in a patent infringement case will seldom be appropriate unless the terms of the claim in question are technical or highly specialized. Fed.Rules Civ.Proc.Rule 56, 28 U.S.C.A.

[6] Patents 291 ⚿323.2(4)

291 Patents
291XII Infringement
291XII(C) Suits in Equity
291k323 Final Judgment or Decree
291k323.2 Summary Judgment
291k323.2(4) k. Affidavits or Other Evidence. Most Cited Cases
In the summary judgment context, the evidentiary record regarding patent infringement should be focused primarily on the structure and function of the accused device. Fed.Rules Civ.Proc.Rule 56, 28 U.S.C.A.

[7] Patents 291 ⚿323.2(4)

291 Patents
291XII Infringement
291XII(C) Suits in Equity
291k323 Final Judgment or Decree
291k323.2 Summary Judgment
291k323.2(4) k. Affidavits or Other Evidence. Most Cited Cases
In the summary judgment context, while the Court is reluctant to examine expert testimony regarding the proper construction of patent claims, the court is pleased to entertain, indeed requires, the testimony or affidavits of some knowledgeable person with respect to the factual question of infringement (i.e.,

© 2007 Thomson/West. No Claim to Orig. U.S. Govt. Works.

the structure of the accused device, how it operates, and in what particulars it corresponds to the claims of the patents in suit), in order to determine whether genuine issues of fact exist. Fed.Rules Civ.Proc.Rule 56, 28 U.S.C.A.

[8] Patents 291 ⚿165(1)

291 Patents
291IX Construction and Operation of Letters Patent
291IX(B) Limitation of Claims
291k165 Operation and Effect of Claims in General
291k165(1) k. In General. Most Cited Cases

Patents 291 ⚿167(1)

291 Patents
291IX Construction and Operation of Letters Patent
291IX(B) Limitation of Claims
291k167 Specifications, Drawings, and Models
291k167(1) k. In General. Most Cited Cases

Patents 291 ⚿168(2.1)

291 Patents
291IX Construction and Operation of Letters Patent
291IX(B) Limitation of Claims
291k168 Proceedings in Patent Office in General
291k168(2) Rejection and Amendment of Claims
291k168(2.1) k. In General. Most Cited Cases
Proper patent claim construction is informed by three sources: the claims, the specification, and the prosecution history.

[9] Patents 291 ⚿101(2)

291 Patents
291IV Applications and Proceedings Thereon
291k101 Claims
291k101(2) k. Construction in General. Most Cited Cases
The language of a patent claim is to be given its ordinary meaning to a person having ordinary skill in the relevant art.

[10] Patents 291 ⚿167(1)

291 Patents
291IX Construction and Operation of Letters Patent
291IX(B) Limitation of Claims
291k167 Specifications, Drawings, and Models
291k167(1) k. In General. Most Cited Cases
Interpretation of patent claims should be informed by the specification; the specification must enable a hypothetical person having ordinary skill in the art to make and use the invention, and so is typically drafted in some sense as an interpretive guide in reading the claims; while it is the claims that define the invention, the specification is the single best guide to the meaning of a disputed term.

[11] Patents 291 ⚿168(1)

291 Patents
291IX Construction and Operation of Letters Patent
291IX(B) Limitation of Claims
291k168 Proceedings in Patent Office in General
291k168(1) k. In General. Most Cited Cases

Patents 291 ⚿168(2.1)

291 Patents
291IX Construction and Operation of Letters Patent
291IX(B) Limitation of Claims
291k168 Proceedings in Patent Office in General
291k168(2) Rejection and Amendment of Claims
291k168(2.1) k. In General. Most Cited Cases
The court may consult the written prosecution

© 2007 Thomson/West. No Claim to Orig. U.S. Govt. Works.

history, or "file wrapper," to ascertain the meaning of any patent claim; the prosecution history reveals evidence of the inventor's own understanding of the claimed invention and how it differs from the prior art, and may be used to confirm a construction that appears on the face of the claims.

[12] Patents 291 ⚿159

291 Patents
291IX Construction and Operation of Letters Patent
291IX(A) In General
291k159 k. Extrinsic Evidence in General. Most Cited Cases
A fourth and secondary source of assistance in construing patent claims is extrinsic evidence, such as expert and inventor testimony, learned treatises, and dictionaries, though the use of extrinsic evidence is discretionary with the court, and extrinsic evidence should not be used to vary or contradict the terms used in the patent itself; where the meaning of a term is clear and unambiguous from the intrinsic evidence, it is incorrect to rely on extrinsic evidence.

[13] Patents 291 ⚿165(2)

291 Patents
291IX Construction and Operation of Letters Patent
291IX(B) Limitation of Claims
291k165 Operation and Effect of Claims in General
291k165(2) k. Claims as Measure of Patentee's Rights. Most Cited Cases
Of the three sources of proper patent claim construction, the claims, the specification, and the prosecution history, it is the claims themselves that delimit the right of the inventor to exclude others from practicing the invention, and thus, neither the specification nor the file wrapper may be used to enlarge, diminish, or vary the terms of the claims.

[14] Patents 291 ⚿167(1)

291 Patents
291IX Construction and Operation of Letters Patent
291IX(B) Limitation of Claims
291k167 Specifications, Drawings, and Models
291k167(1) k. In General. Most Cited Cases
Reference to the specification in the case of patent claims phrased in purely functional terms, i.e., " means-plus-function" claims, should be understood as necessary to identify the particular structure, material, or acts claimed, but not as a substitute for construction of the claim language itself; the task of the court when construing a means-plus-function claim remains to interpret the claim.

[15] Patents 291 ⚿236(1)

291 Patents
291XII Infringement
291XII(A) What Constitutes Infringement
291k233 Patents for Machines or Manufactures
291k236 Identity of Form
291k236(1) k. In General. Most Cited Cases
A device may literally infringe a patent if it includes the structure identified in the specification (or its equivalent), but it must also perform the identical function recited in the claim itself.

[16] Patents 291 ⚿226.7

291 Patents
291XII Infringement
291XII(A) What Constitutes Infringement
291k226.5 Substantial Identity of Subject Matter
291k226.7 k. Function, Means, Operation, and Result. Most Cited Cases
The means-plus-function analysis applies only where a patent claim merely recites a function without a definite structure, material, or act; if a claim uses the word "means for ___ing," but also recites a structure, material, or act, with sufficient clarity that it satisfies the statutory particularity and distinctness requirements, the means-plus-function analysis is unnecessary. 35 U.S.C.A. § 112.

[17] Patents 291 ⚿226.7

© 2007 Thomson/West. No Claim to Orig. U.S. Govt. Works.

4 F.Supp.2d 17
(Cite as: 4 F.Supp.2d 17)

291 Patents
291XII Infringement
291XII(A) What Constitutes Infringement
291k226.5 Substantial Identity of Subject Matter
291k226.7 k. Function, Means, Operation, and Result. Most Cited Cases
The determination whether to apply the means-plus-function analysis is, like other questions of patent claim interpretation, one for the court to make as matter of law.

[18] Patents 291 ⚿159

291 Patents
291IX Construction and Operation of Letters Patent
291IX(A) In General
291k159 k. Extrinsic Evidence in General. Most Cited Cases
Where the court lacked an adequate basis in skill or knowledge of the relevant art to draw definitive conclusions as to proper construction of a patent claim, parties would be directed to agree upon appropriate artisan to advise the court or, failing that, to agree upon three appropriate artisans who reflected the generally accepted range of views about the matters at issue.

[19] Patents 291 ⚿167(1.1)

291 Patents
291IX Construction and Operation of Letters Patent
291IX(B) Limitation of Claims
291k167 Specifications, Drawings, and Models
291k167(1.1) k. Specification as Limiting or Enlarging Claims. Most Cited Cases
A patent claim construction that has the effect of excluding the preferred embodiment in the specification from coverage by the claims is rarely, if ever, correct.

[20] Patents 291 ⚿168(2.1)

291 Patents
291IX Construction and Operation of Letters Patent
291IX(B) Limitation of Claims
291k168 Proceedings in Patent Office in General
291k168(2) Rejection and Amendment of Claims
291k168(2.1) k. In General. Most Cited Cases
Prosecution history may be used not only in an estoppel context but also as a claim construction tool.

[21] Patents 291 ⚿101(4)

291 Patents
291IV Applications and Proceedings Thereon
291k101 Claims
291k101(4) k. Specifications and Drawings, Construction With. Most Cited Cases
A patent claim element specifying a connection to a telephone rate provider at a "predetermined date and time," as part of a method for updating the database of a call rating device that stored billing rate information for various carriers, neither identified nor had to identify who determined the date and time; the claim encompassed a method in which the time and date for calling the rate provider were selected a substantial period in advance of the call, and in which each call to the rate provider did not have to be initiated by the individual user.

[22] Patents 291 ⚿101(2)

291 Patents
291IV Applications and Proceedings Thereon
291k101 Claims
291k101(2) k. Construction in General. Most Cited Cases
A patent claim describing a method of updating the database of a call rating device that stored telephone billing rate information for various carriers, providing that each subscriber station calling at a "scheduled time" a rate provider having billing rate parameters for each calling station, wherein the "scheduled time" for each call was such that the calls from each calling station were substantially spaced apart from each other, encompassed a method in which the time for calling the rate provider was determined and planned in such a way as to ensure that there were substantial

© 2007 Thomson/West. No Claim to Orig. U.S. Govt. Works.

intervals of time between each call received by the rate provider from all users.

[23] Patents 291 ⚿101(2)

291 Patents
291IV Applications and Proceedings Thereon
291k101 Claims
291k101(2) k. Construction in General. Most Cited Cases
Different usages in different patent claims are presumed to have different meanings.

[24] Patents 291 ⚿101(2)

291 Patents
291IV Applications and Proceedings Thereon
291k101 Claims
291k101(2) k. Construction in General. Most Cited Cases
A patent claim according to which an apparatus would be required to transmit from a telephone rate provider to a call rating device "updated billing rate parameters" encompassed transmission of complete new tables, or, in the alternative, additions, deletions, or modifications to existing rate tables.

[25] Patents 291 ⚿226.6

291 Patents
291XII Infringement
291XII(A) What Constitutes Infringement
291k226.5 Substantial Identity of Subject Matter
291k226.6 k. Comparison with Claims of Patent. Most Cited Cases

Patents 291 ⚿237

291 Patents
291XII Infringement
291XII(A) What Constitutes Infringement
291k233 Patents for Machines or Manufactures
291k237 k. Substitution of Equivalents. Most Cited Cases
The accused device or method must embody each and every element of a patent claim, either literally or under the doctrine of equivalents, in order to infringe on that claim.

[26] Patents 291 ⚿237

291 Patents
291XII Infringement
291XII(A) What Constitutes Infringement
291k233 Patents for Machines or Manufactures
291k237 k. Substitution of Equivalents. Most Cited Cases
Even if an element of the accused device or method does not satisfy a patent claim literally, it may infringe under the doctrine of equivalents if it performs the same function, in the same way, to produce the same result as the claim element.

[27] Patents 291 ⚿323.2(3)

291 Patents
291XII Infringement
291XII(C) Suits in Equity
291k323 Final Judgment or Decree
291k323.2 Summary Judgment
291k323.2(3) k. Particular Cases. Most Cited Cases
Genuine issues of material fact as whether an accused product embodied a method of placing calls wherein the determination of the time and date of the call was made substantially in advance, and the user did not have to initiate the call at the time it was to be made, precluded summary judgment of noninfringement as to claims of a patent claiming a method for automatically updating the database of calling rates used by a telephone call rating device.

[28] Patents 291 ⚿323.2(3)

291 Patents
291XII Infringement
291XII(C) Suits in Equity
291k323 Final Judgment or Decree
291k323.2 Summary Judgment
291k323.2(3) k. Particular Cases. Most Cited Cases
A genuine issue of material fact as to whether "load balancing," the use of randomness to prevent excessive transactions at any given time, was a sufficient mechanism to achieve substantial spacing

© 2007 Thomson/West. No Claim to Orig. U.S. Govt. Works.

of calls precluded summary judgment of noninfringement as to a patent claim requiring that the accused device place calls that were planned in such a way as to ensure that there were substantial intervals of time between each call received by the telephone rate provider from all users of a call rating device.

[29] Patents 291 ⚿323.2(3)

291 Patents
291XII Infringement
291XII(C) Suits in Equity
291k323 Final Judgment or Decree
291k323.2 Summary Judgment
291k323.2(3) k. Particular Cases. Most Cited Cases
A genuine issue of material fact as to whether an accused device satisfied patent claims reciting the transmission of "updated billing rate parameters" from a rate provider to the user of a telephone call rating device precluded summary judgment of noninfringement.

***20** Steven M. Bauer, Joseph A. Capraro, Robert N. Feldman, Testa, Hurwitz & Thibeault, Boston, MA, for Plaintiff.
Robert M. Asher, Lee C. Bromberg, Robert L. Kann , Erik P. Belt, Bromberg & Sunstein, Boston, MA, for Defendant.

YOUNG, District Judge.
The plaintiff, MediaCom Corporation ("MediaCom"), commenced this declaratory ***21** judgment action seeking a declaration that its Phone Miser product does not infringe patents owned by the defendant, Rates Technology, Inc. ("Rates"). Rates counterclaimed, alleging infringement of both patents.

Rates owns two United States Patents Nos. 5,519,769 ("the '769 patent") and 5,425,085 ("the '085 patent"). The '085 patent claims a device for automatically routing telephone calls to the carrier offering the least expensive rates for each particular call. This device is called a "Least Cost Routing Device." Generically, such a device is referred to as a "call rating device." The '769 patent claims a method for automatically updating the database of calling rates used by such a call rating device. The two patents are directed at minimizing telephone costs by optimizing the rates at which each call is placed.

A. Procedure: The *Markman* Hearing.

The Federal Circuit and the Supreme Court have recently removed any doubt that the construction of patent claims is a question of law for a court to decide. *Markman v. Westview Instruments, Inc.*, 52 F.3d 967, 978-81, 987 (Fed.Cir.1995) (en banc), *aff'd*,517 U.S. 370, 116 S.Ct. 1384, 134 L.Ed.2d 577 (1996). The task of construing claims entirely as matter of law presents some novel challenges to parties and the district courts, however, and thus this case requires some flexibility and experimentation in the adaptation of familiar methods and strategies.

The *Markman* decisions quickly spawned a new species of proceeding in patent cases-the *Markman* hearing. *See* Kenneth R. Amado, *Reforming Jury Practice in Patent Cases: Suggestions Towards Learning to Love Using an Eighteenth Century System While Approaching the Twenty-first Century,* 78 J. Pat. & Trademark Off. Soc'y 345, 346 (1996) ("Suggestion 1: Since the United States Supreme court Has Affirmed Markman, Pray that Trial Judges Decide Claim Construction Using Pre-Trial Markman Hearings"); James M. Amend, Kirkland & Ellis, *Patent Law: a Primer for Federal District Court Judges* 11-12 (1998) (unpublished manuscript); David H. Binney & Toussaint L. Myricks, *Patent Claim Interpretation After Markman-How Have the Trial Courts Adapted?,* 38 Idea 155 (1997) ("*Patent Claim Interpretation After Markman* "); Steven D. Glazer & Steven J. Rizzi, *Markman: The Supreme Court Takes Aim at Patent Juries,* J. Proprietary Rights, May 1996, at 2; Gary M. Hoffman & John A. Wasleff, *A Tale of Two Court Cases: Markman and Hilton-Davis,* Computer Law, June 1996, at 18; William F. Lee,

© 2007 Thomson/West. No Claim to Orig. U.S. Govt. Works.

Simona A. Levi-Minzi & Kerry S. Burke, *Markman and Its Progeny, in High Technology Law in the Twenty-First Century,* Proceedings of the Second Annual High Technology Conference 15, 34-37 (Suffolk Univ. Law School, Sept. 26, 1997) (" *Markman and Its Progeny* "); [FN1] William F. Lee & Wayne L. Stoner, *The Role of Expert Witnesses on Liability Issues in Patent Litigation in Light of Markman v. Westview Instruments in Winning Strategies in* 423 *Winning Strategies in Patent Litigation* 647, 649-86 (Practising Law Institute 1995). These hearings run the gamut from mid-trial sidebar conferences that undergird relevance rulings, *see Eastman Kodak Co. v. Goodyear Tire & Rubber Co.,* 114 F.3d 1547 (Fed.Cir.1997) to virtual mini-trials extending over several days and generating extensive evidentiary records. ***22** *See Neles-Jamesbury, Inc. v. Fisher Controls, Int'l,* 989 F.Supp. 393, 395 (D.Mass.1998) (Gorton, J.); *Thorn EMI North America, Inc. v. Intel Corp.,* 936 F.Supp. 1186, 1189 (D.Del.1996); *Chad Industries, Inc. v. Automation Tooling Systems, Inc.,* 938 F.Supp. 601, 604 (C.D.Cal.1996) ; *Loral Fairchild Corp. v. Victor Co. of Japan Ltd.,* 906 F.Supp. 798, 802 (E.D.N.Y.1995), and 911 F.Supp. 76, 79 (E.D.N.Y.1996); *Graco Children's Products, Inc. v. Century Products Co., Inc.,* No. CIV.A. 93-6710, 1996 WL 421966 (E.D.Pa.1996); *Ethicon Endo-Surgery v. U.S. Surgical Corp.,* 900 F.Supp. 172, 173 (S.D.Ohio, 1995), *aff'd in part, vacated in part, remanded,*93 F.3d 1572 (Fed.Cir.1996); *Elf Atochem North America, Inc. v. Libbey-Owens-Ford Co., Inc.* 894 F.Supp. 844, 850 (D.Del.1995); N.D. Cal. R. 16-6 to 16-11. *See also Lee's Aquarium & Pet Products, Inc. v. Python Pet Products,* 951 F.Supp. 1469 (S.D.Cal.1997); *P.A.T., Co. v. Ultrak, Inc.,* 948 F.Supp. 1506 (D.Kan.1996); *Moll v. Northern Telecom, Inc.,* No. CIV.A. 94-5451, 1996 WL 11355, at *7 (E.D.Pa. Jan.3, 1996); *Genentech, Inc. v. Novo Nordisk A/S,* 935 F.Supp. 260 (S.D.N.Y.1996), *vacated*108 F.3d 1361 (Fed.Cir.1997), *reh'g denied* (1997), *cert. denied*522 U.S. 963, 118 S.Ct. 397, 139 L.Ed.2d 310 (1997).

> FN1. As noted by Judge Newman in her dissent, *Markman* may require additional, separate evidentiary hearings in a typical patent infringement suit in light of the pivotal role played by claim interpretation. *See Markman,* 52 F.3d at 1008. Indeed, a new type of motion has emerged, which is a hybrid between a motion *in limine* and one for summary judgment .... Evidentiary hearings, or "Markman Trials," to interpret claim language are becoming routine .... The nature and scope of this new breed of hearings has varied considerably. In some cases the courts have opted simply to issue an interpretation on the record; in others there has been a full blown evidentiary hearing to resolve claim construction *per se;* and in other cases still, the court has delayed a determination all the way until the eve before jury instruction. Steven E. Lipman & Janice M. Muller, *The Markman Case, in American Bar Association Intellectual Property Law Section,* Spring 1996, Arlington, Virginia, CLE Program Materials at 523 ("The *Markman* Case").
> *Markman and Its Progeny* at 34-35.

The characterization of claim construction as matter of law, of course, theoretically permits the resolution of these issues at a relatively early stage in the litigation. "From the standpoint of the litigants, earlier is generally better.... The advantage arises from the fact that many patent cases turn on claim interpretation issues." *Patent Claim Interpretation After Markman, supra* at 161. Questions regarding the construction of patent claims can now safely be addressed in many circumstances prior to the completion of fact discovery, and certainly before trial. In this case, the Court determined that an early *Markman* hearing was a salutary mechanism for narrowing the disputed issues and securing prompt disposition of those matters as to which there were no genuine factual disputes.

Implicit in this approach to the *Markman* hearing is the notion that, like any other determination of a legal rule, such a hearing should take place in the context of conventional motion practice. Only through the use of traditional dispositive motions will the Court remain moored to familiar procedures

© 2007 Thomson/West. No Claim to Orig. U.S. Govt. Works.

and standards of decision, and focus on the application of legal rules to discrete factual circumstances. Otherwise, the Court risks crafting elegant, but ultimately useless, statements of claim construction that fail to address the particular controversy before it. Free-standing *Markman* hearings are of little use in actual litigation and may, indeed, run afoul of the "case and controversy" limitation on judicial power expressed in the Constitution. U.S. Const. art. III, § 2.[FN2]

FN2. Since *Markman,* claim construction has most frequently been handled in conjunction with a hearing on a motion for summary judgment. *See Johansson v. Rose Displays, Ltd.,* 924 F.Supp. 328 (D.Mass.1996) (Young, J.) *rev'd on other grounds,*121 F.3d 727, 1997 WL 437016 (Fed. Cir.1997); *Dow Corning Wright Corp. v. Osteonics Corp.,* 939 F.Supp. 65 (D.Mass.1996) (O'Toole, J.); *ADC Telecommunications, Inc. v. Siecor Corp.,* 954 F.Supp. 820 (D.Del.1997); *Allied Gator, Inc. v. NPK Construction Equipment, Inc.,* 937 F.Supp. 694 (N.D.Ohio 1996); *American Bank Note Holographics, Inc. v. Upper Deck Co.,* 934 F.Supp. 630 (S.D.N.Y.1996); *American Permahedge, Inc. v. Barcana, Inc.,* 105 F.3d 1441 (Fed.Cir.1997); *Calmac Mfg. Corp. v. Dunham-Bush, Inc.,* 929 F.Supp. 951 (E.D.Va.1996); *Ekchian v. Home Depot, Inc.,* 104 F.3d 1299 (Fed.Cir.1997) ; *General Mills, Inc. v. Hunt-Wesson, Inc.,* 103 F.3d 978 (Fed.Cir.1997); *GMI Holdings, Inc., v. Stanley Door Systems, Inc.,* 943 F.Supp. 1420 (N.D.Ohio 1996); *Lockwood v. American Airlines, Inc.,* 107 F.3d 1565, 41 U.S.P.Q.2d (BNA) 1961 (Fed.Cir.1997); *Moll,* 1996 WL 11355; *R2 Medical Systems, Inc. v. Katecho, Inc.,* 931 F.Supp. 1397 (N.D.Ill.1996); *Trilogy Communications, Inc. v. Times Fiber Communications, Inc.,* 109 F.3d 739 (Fed.Cir.1997); *Ultradent Products v. Life-Like Cosmetics, Inc.,* 924 F.Supp. 1101 (D.Utah 1996). For a full survey of the recent decisions, *see Patent Claim Interpretation After Markman, supra* at 163-83.

[1] The parties anticipated this Court's need for a procedural vehicle in which to consider their claim construction arguments. MediaCom filed motions for summary judgment based upon its proposed claim constructions; Rates opposed these motions in like manner. As the preceding discussion indicates, the parties' instincts in this regard were sound; indeed, the Rule 56 summary judgment motion is a perfectly appropriate vehicle in which to conduct a *Markman* hearing.***23** *See Markman,* 52 F.3d at 981 ("[Pronouncing the meaning of the patent] ordinarily can be accomplished by the court in framing its charge to the jury, but may also be done in the context of dispositive motions such as those seeking judgment as a matter of law.") With these principles in mind, the Court held a *Markman* hearing-i.e., a hearing on the motions for summary judgment-on December 15, 1997, to afford the parties an opportunity to present arguments directed at the proper construction of the claims contained in the '085 and '769 patents.

Unfortunately, the scheduling of a separate hearing in which to address issues of claim construction appears to have engendered some confusion as to the proper order of analysis in this dispute. In accordance with the model of claim construction laid out in *Markman, see* 52 F.3d at 978-81, 987, the Court expressly limited argument to the claims, specifications, and prosecution history of the patents in suit,[FN3] declining to entertain any expert testimony, affidavits, or other extrinsic evidence regarding construction of the claims until and unless the Court determined that such evidence would be required.

FN3. Specifically, the Court ordered "Mr. Joel will not testify in the *Markman* hearing in any respect. In fact, no one will testify unless the Court so orders. The *Markman* hearing will proceed as follows: 1. Argument concerning the claims themselves. If the matter is not resolved, then 2. Argument concerning the file wrapper. If the matter is not resolved,

© 2007 Thomson/West. No Claim to Orig. U.S. Govt. Works.

> then affidavits from alleged experts, not Mr. Joel, and argument thereon. Only if the matter is not by then resolved will the Court entertain oral testimony."
> Order of Nov. 12, 1997 (denying defendant's Motion to Compel Deposition, Docket No. 37).
> In addition to studying the language of the patent itself, a court "should also consider the patent's prosecution history, if it is in evidence"*Markman,* 52 F.3d at 980. While this Court acknowledges the value of prosecution history, it also finds the *Markman* court's statutory interpretation analogy to be extremely helpful in guiding this inquiry. If the prosecution history is analogous to legislative history, its most useful role lies in the explication of ambiguous or contradictory language within the patent, and not in the construction of meaning independent from the text itself. It is axiomatic that the prosecution history "cannot 'enlarge, diminish or vary' the limitations in the claims." *Markman,* 52 F.3d at 980 (quoting *Goodyear Dental Vulcanite Co. v. Davis,* 102 U.S. 222, 227, 26 L.Ed. 149 (1880)). For that reason, the Court has endeavored to understand the language of the claims in light of the specification first, and only then consider whether the prosecution history confirms or calls into question that understanding. The Court has, in this spirit, given due consideration to relevant and helpful references to the prosecution history. *Cf. Johansson,* 924 F.Supp. at 328.

In so doing, the Court gave practical meaning to the familiar distinction in patent construction between intrinsic and extrinsic evidence, *Markman,* 52 F.3d at 980-81; *Vitronics Corp. v. Conceptronic, Inc.,* 90 F.3d 1576, 1582-85 (Fed.Cir.1996); the former constituting the public record of the government granted patent monopoly, the latter being of secondary significance and limited utility. The record of the case to this point however, suggests that the parties have conflated such disfavored extrinsic evidence with the helpful, and often necessary, supporting affidavits and other materials contemplated in Rule 56 as the basis for a ruling on summary judgment.

[2] In the ordinary summary judgment motion, the parties seek to persuade the court to apply a legal rule-thus clarifying the rule the Court deems controlling-and at the same time seek to establish the presence or absence of a genuine factual dispute, given the rule applied. Patent infringement analysis should be no different except that, because patent claims often implicate technical or highly specialized knowledge, courts will typically require more assistance than they otherwise do in pronouncing the law (claim construction).[FN4] Once the claims have been construed, however, the arguments as to disputes of fact (infringement), proceed in the customary manner. The two questions need not be procedurally separated, but the analytic distinction must be maintained.

> FN4. A court is ordinarily expected to supply its own "expertise" in construing written documents, such as contracts and statutes, because these matters are within the special purview of lawyers. In the construction of even relatively simple patent claims, however, the judge may labor in the unaccustomed role of the layman.

[3] Thus there is no reason to receive "expert opinion" by way of affidavits or testimony on the question of claim construction. Indeed, the central teaching of the Supreme ***24** Court in *Markman* was that "judges, not juries, are the better suited to find the acquired meaning of patent terms." *Markman,* 517 U.S. 370, 116 S.Ct. at 1395, 134 L.Ed.2d 577. The assistance of skilled and knowledgeable artisans, of course, may prove invaluable in educating the judge in the nuances of the "underlying technology." The Federal Circuit's recent decision in *Fromson v. Anitec Printing Plates, Inc.,* 132 F.3d 1437 (Fed.Cir.1997), illustrates an appropriate use of such assistance. In *Fromson,* the district court relied on experts to explain the process of forming a thin aluminum

© 2007 Thomson/West. No Claim to Orig. U.S. Govt. Works.

oxide coating on printing plates by using electrochemical anodization. The Federal Circuit held that such resort to extrinsic evidence was appropriate. The testimony enabled the district court to understand the anodization process to such an extent that it was able to construe the claims. As the Federal Circuit noted, "[p]atent specifications are written for persons of skill in the technical field, not for laymen." *Id.* at 1442.

[4][5] But the information such sources provide is more analogous to material supporting a ruling on the admissibility of evidence than to testimony before a finder of fact. *Cf. Charlton Mem. Hosp. v. Sullivan,* 816 F.Supp. 50, 53 (D.Mass.1993).[FN5] Even the most learned expert cannot supplant the Court in its task of interpreting the written document. Nor can the Court simply choose from among the proffered interpretations without conducting its own independent analysis firmly grounded in an adequate understanding of the subject matter of the patent. "The district court's claim construction, enlightened by such extrinsic evidence as may be helpful, is still based upon the patent and prosecution history. It is therefore still construction, and is a matter of law subject to *de novo* review." *Markman,* 52 F.3d at 981. Moreover, the use of extrinsic evidence will seldom be appropriate unless the terms of the claim in question are technical or highly specialized. *See Pall Corp. v. Micron Separations, Inc.,* 66 F.3d 1211, 1216 (Fed.Cir.1995); *Nova Biomedical Corp. v. i-STAT Corp.,* 980 F.Supp. 614, 616 (D.Mass.1997) (Stearns, J.).

> FN5. The necessity of obtaining expert assistance in certain cases does not mean that the determination reverts to a contest between partisans. Rather, this particular " mongrel practice," *Markman,* 517 U.S. 370, 116 S.Ct. at 1390, like so many others, falls into that category of issues that are decided "as matters of law are decided. " *Recupero v. New England Tel. & Tel. Co.,* 118 F.3d 820, 839 (1st Cir.1997) (Keeton, J.). Among other things, this means that a court may be expected to keep its own counsel and consult its own resources in formulating its conclusion.

[6][7] In a similar vein, the evidentiary record regarding infringement should be focused primarily on the structure and function of the accused device. Whereas the Court is reluctant to examine expert testimony regarding the proper construction of claims, the Court is pleased to entertain-indeed requires-the testimony or affidavits of some knowledgeable person with respect to the factual question of infringement (i.e. the structure of the accused device, how it operates, and in what particulars it corresponds to the claims of the patents in suit), in order to determine whether genuine issues of fact exist in this case.[FN6] These are appropriate questions for the trier of fact. Nothing in *Markman* requires or suggests that a court must pronounce the meaning of patent claims in a factual vacuum.

> FN6. Rates' "Cross-Motion for Summary Judgment on Claim Construction" illustrates the difficulty when the distinction between construction and infringement is not clearly maintained. Although denominated a motion for summary judgment under Rule 56, the document and its supporting memorandum address solely the legal question of claim construction. Rates' request for a judgment of claim construction calls for what is in essence an advisory opinion on the law without reference to a particular set of facts. The inquiry whether genuine issues of material fact exist as to claim construction is inapposite. The relevant question is whether there are factual disputes as to infringement. Rates' motion is therefore denied without further discussion.

Having endeavored to clarify the procedure and analytic framework this Court has set out to follow in this case, analysis of the disputed claims may proceed.

B. The Technology.

© 2007 Thomson/West. No Claim to Orig. U.S. Govt. Works.

The summary judgment record evidences the following undisputed facts: There are hundreds of long-distance carriers in the *25 United States alone, and each offers different rate schedules with tremendous variation among carriers. The rates of any individual carrier also vary depending upon the time of day, day of the week, and destination, among other factors. A telephone user ordinarily selects from among competing carriers by dialing an access code, which precedes the telephone number. The two patented devices together allow a telephone user to automate this selection process, providing service at optimal rates.

The North American public switched telephone network comprises a host of local telephone networks. Each network consists of individual telephones, which are connected via telecommunications lines of various types to a local central office. Each local central office is connected to long-distance telephone companies (such as AT & T, MCI, and Sprint), and thereby to other local networks.

Local telephone calls are routed through the central office along the local network. Long-distance calls, those placed to telephones beyond the local network, must be routed through a long-distance carrier. There may or may not be charges, or a choice of carriers, for both long distance and local calls. For each call, however, power to the telephone, signaling, and routing services are all provided by the local central office.

The circuitry that connects the telephone to the central office has two main purposes: signaling and transmission. Signaling functions include telling the central office when to seize a line to make a call ("supervision") and dialing the desired number (" addressing"). Transmission refers to the exchange of voice and data over the telephone network.

When the handset of the telephone is resting in the cradle or otherwise inactive, the telephone is said to be "on-hook". In the on-hook state, the local circuitry is open, and no signaling or transmission can occur. When the handset is taken off of the cradle or otherwise activated, the telephone is said to be "off-hook". When the telephone is off-hook, the local circuitry is closed, and the local office supplies both AC (alternating current) and DC (direct current) power to the telephone. DC current powers the telephone itself. AC current enables signaling and transmission to occur. The ring signal, alerting the user to an incoming call, travels along a separate circuit, which is electrically connected to the central office regardless of the on-hook or off-hook state of the telephone.

Both the patented devices and MediaCom's PhoneMiser product are connected to the circuitry between the telephone and the local network (i.e. between the telephone and the wall jack). Both devices intercept the phone number that the user dials in order first to determine the least expensive carrier for that call and then to dial the appropriate access number to route the call through that carrier.

Patent infringement analysis requires two separate steps. First, the court must construe the claims in order to establish their meaning and scope. Only then may the trier of fact compare the claims to the accused device in order to determine infringement. *See Texas Instruments Inc. v. Cypress Semiconductor Corp.,* 90 F.3d 1558, 1563 (Fed.Cir.1996). Claim construction, as distinct from infringement, is matter of law for the court to determine. *Markman,* 52 F.3d at 979.

A. Claim Construction.

[8][9] Proper claim construction is informed by three sources: the claims, the specification, and the prosecution history. *Unique Concepts, Inc. v. Brown,* 939 F.2d 1558, 1561 (Fed.Cir.1991). The language of the claim is to be given its ordinary meaning to a person having ordinary skill in the relevant art. *Quantum Corp. v. Rodime, PLC,* 65 F.3d 1577, 1580 (Fed.Cir.1995), *cert. denied,*517 U.S. 1167, 116 S.Ct. 1567, 134 L.Ed.2d 666 (1996).

[10] Interpretation of the claims should be informed by the specification. *Autogiro Co. of Am. v. United States,* 181 Ct.Cl. 55, 384 F.2d 391, 398 (1967).

© 2007 Thomson/West. No Claim to Orig. U.S. Govt. Works.

4 F.Supp.2d 17

The specification must enable a hypothetical person having ordinary skill in the art to make and use the invention, and so is typically drafted in some sense as an interpretive guide in reading the claims. While it is the claims that define the invention, the specification "is the single best ***26** guide to the meaning of a disputed term." *Vitronics Corp., v. Conceptronic, Inc.,* 90 F.3d 1576, 1582 (Fed.Cir.1996).

[11][12] Finally, the court may consult the written prosecution history, or "file wrapper," to ascertain the meaning of any claim. *Graham v. John Deere Co.,* 383 U.S. 1, 33, 86 S.Ct. 684, 15 L.Ed.2d 545 (1966). The prosecution history reveals evidence of the inventor's own understanding of the claimed invention and how it differs from the prior art, and may be used to confirm a construction that appears on the face of the claims.[FN7]

FN7. A fourth and secondary source of assistance is extrinsic evidence, such as expert and inventor testimony, learned treatises, and dictionaries. The use of extrinsic evidence is discretionary with the court, *Seattle Box Co. v. Industrial Crating & Packing, Inc.,* 731 F.2d 818, 826 (Fed.Cir.1984), and should not be used to vary or contradict the terms used in the patent itself. Where the meaning of a term is clear and unambiguous from the intrinsic evidence, it is "legally incorrect" to rely on extrinsic evidence. *Vitronics,* 90 F.3d at 1585.

[13] Of the three sources, it is the claims themselves that delimit the right of the inventor to exclude others from practicing the invention. As a result, neither the specification nor the file wrapper may be used to enlarge, diminish, or vary the terms of the claims. *See Markman,* 52 F.3d at 980; *Goodyear Dental Vulcanite Co. v. Davis,* 102 U.S. 222, 227, 26 L.Ed. 149 (1880). The process of claim construction is concluded when the Court is satisfied that it has arrived at the correct understanding of the claims language, and is prepared to pronounce that meaning as matter of law. *See Markman* at 981.

[14] Claims phrased in purely functional terms are permitted,[FN8] but in construing such claims the court must look to the specification in order to identify the "corresponding structure, material, or acts" described therein. 35 U.S.C. § 112, ¶ 6; [FN9] *see B. Braun Medical, Inc. v. Abbott Labs.,* 124 F.3d 1419 (Fed.Cir.1997); *In re Donaldson Co., Inc.,* 16 F.3d 1189, 1195 (Fed.Cir.1994) ("If an applicant [employing a means-plus-function claim] fails to set forth an adequate disclosure [in the specification], the applicant has in effect failed to particularly point out and distinctly claim the invention as required by the second paragraph of section 112."). Reference to the specification in these instances should be understood as necessary to identify the particular structure, material, or acts claimed, but not as a substitute for construction of the claim language itself. The task of the court when construing a means-plus-function claim remains to interpret the claim.

FN8. Such a claim is known as a " means-plus-function" claim because it recites in general terms a "means" for performing some function, but does not identify the particular feature of the claimed invention to which reference is made.

FN9. The Sixth paragraph of 35 U.S.C. § 112 reads:
"An element in a claim for a combination may be expressed as a means or step for performing a specified function without the recital of structure, material, or acts in support thereof, and such claim shall be construed to cover the corresponding structure, material, or acts described in the specification and equivalents thereof."

[15] A device may literally infringe if it includes the structure identified in the specification (or its equivalent), but it must also perform the identical function recited in the claim itself. *See Intellicall, Inc. v. Phonometrics, Inc.,* 952 F.2d 1384, 1388 (Fed.Cir.1992).

[16][17] The Federal Circuit has made it clear that

© 2007 Thomson/West. No Claim to Orig. U.S. Govt. Works.

the use of the words "means for ___ing" in a claim element does not blindly trigger application of 35 U.S.C. § 112, ¶ 6. *Cole v. Kimberly-Clark Corp.*, 102 F.3d 524, 531 (Fed.Cir.1996). The means-plus-function analysis applies only where the claim merely recites a function without a definite structure, material, or act. If a claim uses the word "means for ___ing", but also recites a structure, material, or act, with sufficient clarity that it satisfies the particularity and distinctness requirements of 35 U.S.C. § 112, ¶ 2,[FN10] the means-plus-function analysis is unnecessary. The determination whether to apply the means-plus-function analysis is, ***27** thus, like other questions of claim interpretation, one for the court to make as matter of law.

> FN10. The second paragraph of 35 U.S.C. § 112 reads:
> "The specification shall conclude with one or more claims particularly pointing out and distinctly claiming the subject matter which the applicant regards as his invention."

Only certain of the claims are presently in dispute. In support of its summary judgment motion, MediaCom contests Rates' proposed interpretation of Claim 1 of the '085 patent and Claims 1, 11, 23, 35, and 43 of the '769 patent. As these are the only claims now at issue, the Court need not and does not construe other claims at this time. Accordingly, this analysis will proceed to examine each of the disputed claims in turn.

1. '085 Patent Claim 1: "means for disconnecting " and "means for generating"

[18] Claim 1 provides for the call routing device. The claim has eight elements, two of which are in dispute. The relevant claim language recites:
switch means operatively connected to said first jack means for disconnecting said first telephone from said network,
means operatively connected to said switch means for generating a current through said switch means to the first telephone, corresponding to a current provided by said network.

The parties dispute the meaning of the word " disconnecting". MediaCom argues that the switch must completely interrupt the flow of electrical current between the network and the jack. Rates responds that a person having ordinary skill in the art would understand that the term means to disable communication signaling, but presumably to allow DC current to continue flowing through the circuit.

Although the switch means element employs " means of ___ing" language, it is not a means-plus-function claim, because it describes the structure that supports the disconnecting function (i.e. a switch or switches). *See Kimberly-Clark Corp.* at 531 ("perforation means ... for tearing" described structure as perforations; means-plus-function provision inapplicable); *see also Greenberg v. Ethicon Endo-Surgery, Inc.*, 91 F.3d 1580, 1583 (Fed.Cir.1996) (holding that a structure expressed in functional terms might not invoke means-plus-function analysis, noting " [m]any devices take their names from the functions they perform."). Not only is the structure named, but it is described as connected to an adjacent structure, the first jack. *See Kimberly-Clark* at 531. Because this element of Claim 1 recites a definite structure, it is not a means-plus-function claim element.

Although the switch means claim element is not limited by the structure shown in the specification, the specification nevertheless informs construction of the terms in the claim. No special definition appears in the specification to indicate that the words "switch" or "disconnect" are to be understood in any way other than their ordinary meanings. *See Intellicall, Inc.*, 952 F.2d at 1388 (the inventor may act as his own lexicographer so long as the specification clearly provides any definition that differs from the ordinary meaning).
The only light shed on the word "switch" is a reference to the diagram in Fig. 2. The diagram refers to the switch as "SWITCH 2 FROM C", although the written specification makes reference to a "2 Form C" switch. Col.3, Ln. 52. To multiply the confusion, Rates contends that the

© 2007 Thomson/West. No Claim to Orig. U.S. Govt. Works.

specification discloses the use of "*two* 'Form C' switches" rather than one. (Rates' Opp'n to MediaCom's Proposed Claim Construction, 5 [emphasis in original].)

Similarly, the specification sheds no additional light on the use of the term "disconnecting" in Claim 1. It merely offers that the switch "switches the phone off the network to the other components contained in the device." Col. 3, Lns. 52-54. No special definition appears to support Rates' interpretation of a switch that "disable[s] communication signaling," (Rates' Opp'n to MediaCom's Proposed Claim Construction, 5), rather than disconnects in the usual sense. Indeed, the specification states that the switch "connects and disconnects the phone from the network into the current source, 38, which in turn supplies a current to the phone equivalent to the current supplied by the central office of the network." Col. 3, Lns. 57-61.

[19] Nevertheless, Rates argues that the telephone can and must remain electrically connected to the network in order for the ***28** preferred embodiment to function properly. A construction that has the effect of excluding the preferred embodiment in the specification from coverage by the claims is "rarely, if ever, correct." *Vitronics,* 90 F.3d at 1583. Thus, in the face of a plain English reading of the terms of the Claim, Rates urges this Court to conclude that a person having ordinary skill in the art would interpret the switch means element of Claim 1 to require signaling disconnection without electrical disconnection.

The second disputed element of Claim 1 raises a related set of controversies. The parties dispute whether the claim requires an internal power source, or whether power can instead be supplied by the network itself.

As a preliminary matter, this Court construes the generating means element of the claim as a means-plus-function element because it describes no particular structure for performing the function of generating a current corresponding to a current provided by the network. The Court looks to the specification to find a description of the structure that generates current.

The specification identifies the generating means element as a " 'local CO (central office)' current source," Col. 3, Lns. 54-55, which is connected to a "power supply". Col. 4, Lns. 22-24. It is not clear whether the generating means element includes both the local CO current source and the power supply. Nor is it clear precisely what the terms " 'local CO (central office)' current source" and "power supply" signify in this context, with regard to whether the current is generated by the network or by some structure that is a part of the device itself.

Rates originally proposed to construe the current generating element as "local circuitry or equivalents that, when put in connection with the first telephone by operation of the switch means, provides power to excite or operate the telephone that substitutes for the current that would otherwise be provided by the network." (Rates' Prelim. Statement of Proposed Construction, 11.) Rates now contends, however, that the local current generator can get its power from the telephone company as well. (Rates' Surreply, 2-3.)

MediaCom argues that the claim should be limited to an internal power supply that substitutes for the power that would otherwise be supplied by the telephone network when the telephone is disconnected from the network.

It is plausible to read the Claim in various ways. It is possible to interpret the language as allowing the telephone to be switched off its direct connection to the telephone network, and onto a local power supply that is itself powered by the telephone network, as Rates contends. In the alternative, the Claim could be read strictly to limit the power supply to an internal source, such as a battery, as MediaCom contends.

It is probably more natural, however, to read the claim to allow some external means of generating current, so long as that source is not the telephone network. Otherwise, the phrase "corresponding to a current provided by said network" would make little sense. A current cannot fairly be said to correspond to another current if they are in fact the same current run through different paths. Moreover, the ordinary sense of the term "

© 2007 Thomson/West. No Claim to Orig. U.S. Govt. Works.

generating a current" implies the creation or initiation of electrical current, not merely passing along current from a source farther along the line.

The specification also supports the most natural reading. In Fig. 2, the switch (36) interrupts the circuit between the telephone (24) and the jack (25). The switch is in turn connected to the local CO current source (38), which is powered by the power supply (76). Thus when the switch is open, the telephone is connected to the power supply via the local CO current source; when the switch is closed, the telephone is connected to (and powered by) the network via the jack. The only way that the local CO current source can get power from the network is if the power supply itself is also connected to the network.

Reference to the prosecution history lends support to the position that the local current generator is internal to the device, or at least separate from the network. Rates argued that the invention was distinguished from prior art because it included:
***29** an internal current source which energizes the telephone during the time when the telephone is disconnected from the network, which normally provides current for the telephone. Applicants' device includes a switch which disconnects the telephone from the network while the least cost route for a call is determined. During the period when the telephone is disconnected from the network, the internal current source of Applicants' device is connected to the telephone through the switch to energize same.
This feature is entirely lacking in [the prior art reference]. [The prior art reference] does not teach . .. an internal current source which energizes the telephone when it is disconnected from the network.

Declaration of Joseph A. Capraro, Jr., Amendment '085 patent file history, Paper No.5A, p. 10, at M002832.

[20] This statement is pertinent to an understanding of the literal scope of the patent claims. " Prosecution history may be used not only in an estoppel context but also as a claim construction tool." *McGill Inc. v. John Zink Co.,* 736 F.2d 666, 673, (Fed.Cir.1984); *see also Markman,* 52 F.3d at 980. While the language is no more definitive than in the specification or claims, the patentee's own articulation of the invention during prosecution gives no indication of its special interpretation of the word disconnect.

Having examined the relevant sources, the Court, in all candor, recognizes that it is without an adequate basis in skill or knowledge of the relevant art to draw definitive conclusions at this point. Claim 1 presents questions that are sufficiently complex and technical that the Court would be remiss to impose its lay understanding on this patent claim without the benefit of expert guidance.

Particularly, the Court needs a detailed explanation of the diagram in Figure 2, including a description of what each component is and how it operates in conjunction with the others. Especially important, of course, are the switch, the local "CO" current source, and the power supply, as a person skilled in the art interprets those elements. The Court does *not* need further conclusory (and diametrically opposing) statements regarding the *construction* of the claims.

So, what to do? In *General Electric Co. v. Joiner,* 522 U.S. 136, 118 S.Ct. 512, 139 L.Ed.2d 508 (1997), the Supreme Court expressed renewed confidence in the ability of the judges of the district courts to separate the wheat from the chaff along scientific frontiers. The concurrence of Mr. Justice Breyer, *Joiner* 118 S.Ct. at 520, particularly enjoins courts to work cooperatively with the scientific community and points the way. This District has a long tradition of careful inquiry in scientific matters. *See e.g., Dow Corning Wright Corp. v. Osteonics Corp.,* 939 F.Supp. 65 (D.Mass.1996) (O'Toole, J.); *Nova Biomedical Corp. v. i-STAT Corp.,* 980 F.Supp. 614 (D.Mass., 1997) (Stearns, J.); *Fromson v. Anitec Printing Plates, Inc.,* 132 F.3d 1437 (Fed.Cir.1997).

Most recently, my colleague, Judge Richard Stearns, in *Biogen Inc. v. Amgen, Inc.,* CA No. 95-10496-RGS (D.Mass. Dec. 10, 1996), worked out an innovative, useful, and remarkably neutral and fair way to obtain and understand requisite scientific data. Judge Stearns' reliance on a

© 2007 Thomson/West. No Claim to Orig. U.S. Govt. Works.

4 F.Supp.2d 17

technical adviser was cited with approval by Mr. Justice Breyer in his February 16th address to the American Association for the Advancement of Science, "The Interdepencence of Science and Law, " at 10-11. *See* Note, *Improving Judicial Gatekeeping: Technical Advisors and Scientific Evidence,* 110 Harv. L.Rev. 941, 949-51 (1997); ABA Section on Litigation, *Civil Trial Practice Standards* 31 (1998). *But see* Damaska, *Evidence Law Adrift* 151-52 (1977). This Court adopted Judge Stearns' approach in *Amgen v. Hoechst,* CA No. 97-10814-WGY (D.Mass. Jan.27, 1998) (transcript of summary judgment motion hearing) and *Storer v. Hayes Microcomputer Products, Inc.,* CA No. 96-10602-WGY (D.Mass. Apr. 9, 1998) (transcript of hearing), considers it especially germane to its present dilemma, and reproduces his Order in *Biogen* and the scientist's undertaking there in full as Appendices A and B to this Opinion.

Here, following Judge Stearns' approach, this Court directs the parties, within thirty days of the date of this order, to agree upon ***30** an appropriate artisan, arrange to share compensation equally, obtain from him or her the requisite undertaking, see Appendix B, and report to the Court upon all such matters. *See also Ex Parte Peterson,* 253 U.S. 300, 312, 40 S.Ct. 543, 64 L.Ed. 919 (1920); *Reilly v. United States,* 863 F.2d 149, 154-61 (1st Cir.1988). This ought not be unduly difficult. After all, Figure 2 is essentially a wiring diagram. The Court suspects that it is expressed in terms of various professional conventions. Failing such agreement, the parties shall, within forty-five days of this order, agree upon three such appropriate artisans who reflect the generally accepted range of views about these conventional matters, make the necessary arrangements, and report their doings to the Court.
If, to the Court's surprise, the parties utterly fail to agree upon the existence of any qualified advisers, they shall provide a detailed report as to why (since they are presumably conversant with this area of human endeavor) they know so little about it that they cannot agree upon what persons are familiar with its basic premises. It would seem that failure to agree upon such preliminary matters will evidence nothing more than partisanship run amok. [FN11] Once this Court is in a position to evaluate the information contained in the specification of the '085 patent, it will proceed to a definitive construction of Claim 1. Until that time, the motions for summary judgment with respect to the '085 patent will remain under advisement.

FN11. The litigants will no doubt harbor misgivings about relinquishing the prerogative of deploying their own stable of experts. Their concerns are understandable enough. Indeed, at this point one can virtually hear the litigants saying, "Wait a minute, Judge. You originally said that if you got into trouble we could put forward our own experts. After all, you know we each have experts fairly slavering to tell you why one or the other of us is absolutely right."
True enough, yet on reflection this Court concludes that complex claim construction presents an ideal case for a court-selected technical advisor. Here's why.
The adversary process of adjudication is, of course, a form of representative government. *See* Christopher J. Peters, *Adjudication as Representation,* 97 Colum. L.Rev. 312 (1997) (discussing how the processes of our court system vindicate and strengthen democracy by involving litigants with standing in the explication and application of our laws).
The presentation of factual issues to juries-that most vital expression of direct democracy in America today, *In re Acushnet River & New Bedford Harbor: Proceedings re Alleged PCB Pollution,* 712 F.Supp. 994, 1005-06 (D.Mass.1989), *see also Development in the Law: The Civil Jury,* 110 Harv. L.Rev. 1408, 1413 (1997) (footnotes omitted)-carries with it the maximization of litigant autonomy. That is, those litigants with standing shape the litigation and ultimately determine what evidence to adduce before the factfinder, and how. In this context, trial judges are reticent to intrude with additional evidentiary submissions. This may explain the desuetude into which Fed.R.Evid. 706 has fallen. *See* Joe S.

© 2007 Thomson/West. No Claim to Orig. U.S. Govt. Works.

Cecil & Thomas E. Willging, *Court-Appointed Experts in Reference Manual on Scientific Evidence* (Fed. Jud. Center 1994) 535, 539-40 (citing "the reluctance of judges to intrude into the adversarial process" as a principal reason for the failure to appoint an expert under Fed.R.Evid. 706).

Legal analysis, however, is not fact finding, and the technical advisor is not a source of evidence. *See Reilly,* 863 F.2d at 159. Judges, when deciding questions " as matters of law are decided,"*Recupero,* 118 F.3d at 839, are free to go about it pretty much as suits them so long as they do not engage in case-specific ex parte communications. *Model Code of Judicial Conduct* Canon 3(B)(7) (1990). Litigants should understand that in securing the relative "certainty" of judicial claim construction as to the scope of a patent monopoly, they have surrendered to judges the autonomy to shape these issues themselves. In this sense, *Markman* represents a drift toward the European civil justice system of adjudication. This Court accordingly prefers the assistance of its own technical advisor to the clash of adversary presentations. The Court invites the parties to assist in the expert's selection. Should they fail, the Court will go it alone.

2. '769 Patent Claims 1 and 11: "predetermined time and date"

[21] Claim 1 of the '796 patent relates to a method for updating the database of a call rating device that stores billing rate information for various carriers. The call rating device can be the least cost routing device described in the '085 patent, or other known call rating devices. Claim 1 includes four separate elements only one of which is in dispute. The element in dispute relates to the first step of the method, connecting to the rate provider.

connecting at a predetermined time and date via a data transfer line the call rating device to a rate provider having billing ***31** rate parameters for a plurality of calling stations.

Claim 11 contains the same "predetermined date and time" phrase as Claim 1. The claims specify that the connection step must be performed at a predetermined date and time. The parties dispute the meaning (or rather the significance) of the term " predetermined". MediaCom insists that, as a matter of logic and grammar, the phrase " predetermined time and date" requires that this Court identify *by whom* the time and date are predetermined. MediaCom contends that the rate provider, and not the individual user, must perform that function. Rates responds that the claim need not and does not identify who must determine the time and date of the connection, but rather allows a variety of arrangements.

The words used in the claim are simple English. The question is whether they create ambiguity in the context of this claim. MediaCom cites *Atari Games Corp. v. Nintendo of Am., Inc.,* 30 U.S.P.Q.2d 1401, 1412-13 (N.D.Cal.1993) in support of its position that the word "predetermined " is ambiguous. In *Atari* the language in question consisted of a complex series of clauses describing a "predetermined relationship" between the " execution" of one computer program and the " execution" of another. The court held that the words had no readily apparent significance in that context. In contrast, here the meaning of the phrase "predetermined time and date" yields up its meaning quite readily. On its face, the language signifies that a particular time and date must be selected substantially in advance of the connection. The language does not require that the person responsible for that selection be identified in order to give meaning to the claim.

The specification does indicate in several places that the rate provider predetermines the time and date of the connection. Those instances, however, appear in contexts that describe particular aspects or embodiments of the invention, and cannot be used to limit the claims. *See Ekchian v. Home Depot, Inc.,* 104 F.3d 1299, 1303 (Fed.Cir.1997) ("While examples disclosed in the preferred embodiment may aid in the proper interpretation of a claim term, the scope of a claim is not necessarily limited by such examples.") For example, the specification states that "[t]he rate provider has the intelligent

© 2007 Thomson/West. No Claim to Orig. U.S. Govt. Works.

capability" to determine call-in times, a capability that is essential "in a large network." Col. 5, Lns. 6-10. This capability appears to be an advantage in large networks because staggering the calls from subscribers helps to prevent network overload that would occur if a large number of stations called in at once. *Id.* It does not appear necessary, however, that the rate provider must schedule the call-in times in smaller networks, for example.

Similarly, in the context of a pay-telephone calling station, the specification calls for connection via a toll number at a time "set by the rate provider." Col. 4, Lns. 23-25. But this aspect of the invention is specifically directed to an automatic billing arrangement for use with pay-telephones, which would not be suited to predetermination of the call-in times by the user of the telephone.

Finally, MediaCom points to the prosecution history to show that Rates urged predetermination by the rate provider as an advantage over prior art references. Indeed, the prosecution history contains the strongest support for MediaCom's position. It is true that in several instances Rates argued that its invention was not anticipated by earlier inventions specifically because it updates the database automatically, at times established *by the rate provider,* and does not require initiation by the user. The interpretation now advanced by Rates, however, is not precluded by its conduct of the patent prosecution. The factor that distinguished the '769 patent claims over the prior art was that each prior art reference required initiation by the user each time an update was desired. In contrast, Rates claimed an invention that did not require such initiation; indeed, the '769 device could update its database at predetermined dates and times. It would be a different matter if Rates had advanced a distinction between user initiated connection and provider initiated connection, but such was not the case. Rather, the critical distinction was between user initiated connection and predetermined or scheduled connection. *See* Capraro Decl., '769 patent file ***32** history, Amendment, Paper No. 7, p. 3-4, at M002689-90; Amendment, Paper No. 12, p. 1-2, at M002714-15; Amendment, Paper No. 15, p. 8, ¶ 3, at M002739; Notice of Allowablility, Paper No. 16, p. 2-3, at M002744-45.

In the context of claim construction, the prosecution history, like the specification, is merely an aid to interpreting the language of a claim. In this case, reference to the prosecution history does not clearly overwhelm the ordinary meaning attached to the words of the claim, nor does the prosecution history indicate that Rates so limited its claim to obtain the patent that its current position is now precluded. Because the claim itself speaks clearly and unambiguously, this Court need not import terms from the remainder of the patent record to identify who determines the time and date for connection. To do so impermissibly allows statements in the prosecution history to diminish the scope of the claims. *See Markman* 52 F.3d at 980. Claims 1 and 11 therefore encompass a method in which the time and date for calling the rate provider are selected a substantial period in advance of the call, and in which each call to the rate provider need not be initiated by the individual user.

3. '769 Patent Claim 23: "scheduled time"

[22] Claim 23 similarly describes the method of updating subscriber databases. The claim contains four elements, only the first of which is in dispute. Each subscriber station calling at a scheduled time a rate provider having billing rate parameters for each calling station, wherein the scheduled time for each call is such that the calls from each calling station are substantially spaced apart from each other.

Unlike Claims 1 and 11, Claim 23 uses the term " scheduled time" rather than "predetermined date and time" to limit contact between the calling station and the rate provider. Contact must be scheduled, according to the claim, so that calls are " substantially spaced apart in time from each other." Neither party raises an argument that this distinct language should have a distinct meaning. Rates and MediaCom each insist that "scheduled time" has a meaning equivalent to "predetermined date and time".

[23] Notwithstanding the parties' positions, different usages in different claims are presumed to have different meanings. *Tandon Corp. v. U.S. Int'l*

© 2007 Thomson/West. No Claim to Orig. U.S. Govt. Works.

Trade Comm'n, 831 F.2d 1017, 1023 (Fed.Cir.1987) . Because Claim 23 uses a different term, and imposes the additional requirement that calls be spaced apart, this Court must ascertain the meaning of this language. The specification explains that the spacing of calls is advantageous because it prevents the calling stations from overloading the rate provider by calling in all at once. It is difficult to conceive of any way to ensure that calls from numerous calling stations are spaced apart from each other without central direction. If individual calling stations independently were to select times to call in, even if they selected those times far in advance, there would seem to be no way to eliminate the possibility, however remote, of overloading the rate provider.

Rates argues that, even if individual users set their own call-in schedules, those decisions would be random and independent of one another, and so satisfy the requirement that the calls be scheduled so that they are spaced apart. That is an argument properly addressed to factual questions of infringement, and not claim construction. It suffices to construe Claim 23 to encompass a method in which the time for calling the rate provider is determined and planned in such a way as to ensure that there are substantial intervals of time between each call received by the rate provider from all users.

4. '769 Patent Claim 1, 11, 23, 35, 43: "updated billing rate parameters"

[24] Claim 35 describes the apparatus for updating the call rating device. The claim includes four elements; only one sub-element of the fourth element is in dispute.
"means transmitting from the rate provider to the call rating device the updated billing rate parameters when the rate provider determines that an update is required."

The parties dispute the meaning of the term " updated billing rate parameters." The term ***33** " updated billing rate parameters" appears in Claims 1, 11, 23 and 43 as well, and has the same meaning as it has in Claim 35.[FN12]

FN12. No particular or definite means for transmitting is described by this language. The element is therefore a " means-plus-function" claim governed by paragraph 6 of section 112. The only part of the claim that is actually limited by the specification, however, is the means itself. The function that the means performs is fully described in the claim itself. The function of the claim is therefore not limited by the specification, although the specification is a useful aid in interpreting the claim.

According to the claim, the apparatus would be required to transmit "from the rate provider to the call rating device the updated billing rate parameters." MediaCom contends that the term should be construed to require transmission of entire new rate tables whenever the rate provider determines that an update is proper. Rates maintains that the claim requires modifications to the database of the call rating device in order to make current the information stored there, but does not require transmission of entire new rate tables.

The meaning of the disputed term is not obvious from the context of the claim. The specification explains that "billing rate parameters could include the rates for local and long distance calls, and the rates of various carriers in some instances." Col. 3, Lns. 19-21. The billing rate parameters are compiled in a "rate table" that is stored in the " current rate table storage" and the separate "new rate table storage" components of the call rating device. Col. 3, Lns. 24-31. Similarly, the rate provider stores billing rate parameters in a (typically larger) "rate table storage" device. There is no question that the billing rate parameters are stored in the form of tables, as MediaCom argues.

The specification does not say, however, that the information is *transmitted* in the form of tables, as MediaCom urges the Court to conclude. MediaCom points to Col. 4, Lns. 58-59, "[t]he rate table is replaced (block 105) if changes are required. " This language reveals that the new table entirely replaces the current table *within* the call rating

© 2007 Thomson/West. No Claim to Orig. U.S. Govt. Works.

device once the new table becomes effective.[FN13] It does not reveal, however, how the data are transmitted from the rate provider to the call rating device in the first instance. Similarly, the specification refers to a "newer rate table" becoming available within the rate provider device, Col. 6, Lns. 19-20, but does not discuss transmission. The only discussion concerning transmission of billing parameters refers to a "block of data" or "block of information" being retrieved and sent. Col. 5, Ln. 11, 28; Col. 6, Lns. 2-19. The specification contemplates that an update might require the transmission of more than one such block, based on a determination of whether more data is needed to update the database. Col. 6, Lns. 6-19. Absent some other clear indication in the specification, there is no reason to conclude that the "updated billing rate parameters" must be transmitted in the form of complete rate tables. Thus the claims encompass transmission of the complete new tables, or, in the alternative, additions, deletions, or modifications to the existing rate tables.

FN13. The reason two storage areas are required within the call rating device is that new billing information may become available before the new rates actually go into effect. By using two different tables, the device can be updated as soon as the new rates are publicized, but continue to refer to the old rates as long as they remain in effect.

B. Infringement.

The first labor completed, the second now begins. As the issue of infringement arises on cross motions for summary judgment, this Court must determine whether there remain genuine issues of material fact on the question of infringement of the '085 and '769 patents as they are now construed, and whether MediaCom is entitled to judgment. Fed.R.Civ.P. 56. A "genuine" issue of fact is one that a reasonable jury, on the record before the court, could resolve in favor of either party. *Anderson v. Liberty Lobby, Inc.,* 477 U.S. 242, 248, 106 S.Ct. 2505, 91 L.Ed.2d 202 (1986). In making this determination, the court must view the evidence in the light most favorable to the non-moving party and draw all reasonable inferences in its favor. ***34***Eastman Kodak Co. v. Image Technical Servs., Inc.,* 504 U.S. 451, 490, 112 S.Ct. 2072, 119 L.Ed.2d 265 (1992) (citing *Anderson,* 477 U.S. at 255, 106 S.Ct. 2505).

[25][26] The accused device or method must embody each and every element of a claim, either literally or under the doctrine of equivalents, in order to infringe on that claim. *Warner-Jenkinson Co. v. Hilton Davis Chem. Co.,* 520 U.S. 17, 117 S.Ct. 1040, 1054, 137 L.Ed.2d 146 (1997); *London v. Carson Pirie Scott & Co.,* 946 F.2d 1534, 1538-39 (Fed.Cir.1991) (quoting *Lemelson v. United States,* 752 F.2d 1538, 1551 [Fed. Cir.1985]). Even if an element of the accused device or method does not satisfy the patent claim literally, it may infringe under the doctrine of equivalents if it performs the same function, in the same way, to produce the same result as the claim element. *See Pennwalt Corp. v. Durand-Wayland, Inc.,* 833 F.2d 931, 934-35 (Fed.Cir.1987) (en banc); *Warner-Jenkinson,* 520 U.S. at ----, 117 S.Ct. at 1054 (directing attention to "the role played by each element in the context of the specific patent claim").

Having reserved the question of infringement on the '085 patent, the Court proceeds directly to the '769 patent. Because the parties have directed the bulk of their arguments to questions of claim construction, there is comparatively little dispute as to factual matters. The only task remaining is to apply the patent claims as construed by the Court to the PhoneMiser product in order to determine whether MediaCom is entitled to judgment.

1. Infringement of Claims 1 and 11

[27] There is no dispute about the operation of the PhoneMiser product with respect to Claims 1 and 11. According to Robert L. Pokress, Chairman and Chief Executive Officer of MediaCom, and one of the designers of the PhoneMiser product,
the PhoneMiser software initially uses the date that the user decides to load the software onto the PC as the first date to place a call to the central server.

© 2007 Thomson/West. No Claim to Orig. U.S. Govt. Works.

Thereafter, the update routine can automatically place a new call thirty days from the most recent update. In addition, the user can, at will, manually direct the update routine to place the telephone call more frequently. After placing such a call, the update routine within the PhoneMiser software in the PC resets itself in its default mode to request another update thirty days from the most recent update.

Declaration of Robert L. Pokress ¶ 12 ("Pokress Decl.") Rates embraces this description, and neither party offers any contrary description of the accused product's operation or structure.

Under this Court's construction of the relevant claims, the accused product must embody a method of placing calls wherein the determination of the time and date of the call is made substantially in advance, and the user need not initiate the call at the time it is to be made. There is sufficient evidence to support the inference that the PhoneMiser product does embody these limitations, and therefore infringes as to this element. Thirty days in advance is sufficiently ahead of time to be called predetermined, and although the user may initiate calls, she need not. Update calls will be made regularly without any intervention by the user. Since a reasonable trier of fact might find infringement, summary judgment of noninfringement for MediaCom Claims 1 and 11 must be denied.

2. Infringement of Claim 23

[28] Although Claim 23 carries a slightly different limitation, Mr. Pokress's account of the operation of the PhoneMiser remains the relevant text. Claim 23 requires that the accused device place calls that are planned in such a way as to ensure that there are substantial intervals of time between each call received by the rate provider from all users. Rates argues that, even though there is no central control over scheduling, the PhoneMiser systematically assures that calls will be placed at acceptable intervals. Rates introduces the concept of "load balancing", the use of randomness to prevent excessive transactions at any given time. Because the initial use of the PhoneMiser by individual users would be determined independently and at random, the load on the system would be balanced and the spacing of calls would be assured as a matter of probability. Declaration***35** of Stephen K. Burns, Ph.D. ¶ 52. ("Burns Decl.") Rates asserts that " load balancing" is a well understood and acceptable method of controlling calls, and that a person having skill in the art would understand this method as satisfying the scheduling element of Claim 23. *Id.*

Whether or not "load balancing" is a sufficient mechanism to achieve substantial spacing of calls is a question of fact. If the trier of fact were to credit Rates' assertions concerning the operation of the PhoneMiser product, it could on that basis draw a conclusion of infringement. Rates has thus demonstrated the presence of a genuine issue of material fact, and MediaCom's motion for summary judgment of noninfringement of Claim 23 must be denied.

3. Infringement of Claims 1, 11, 23, 35, and 43

[29] Finally, Claims 1, 11, 23, 35, and 43 all recite the transmission of "updated billing rate parameters" from the rate provider to the user. The PhoneMiser "compiles the rate changes for the user's customized database in response to the request and downloads only the changes needed for the user's database." Pokress Decl. ¶ 13. The " central server provides only rate changes, not complete new rate tables." *Id.*

Under this Court's construction of the Claims, the accused device may transmit updated billing rate parameters in the form of complete new tables, or modifications to existing rate tables. On the record before the Court, the trier of fact could find infringement since transmission of "rate changes" could reasonably be seen to satisfy the updating element. Therefore, summary judgment of noninfringement by MediaCom must again be denied.

© 2007 Thomson/West. No Claim to Orig. U.S. Govt. Works.

4 F.Supp.2d 17
(Cite as: 4 F.Supp.2d 17)

As to the '085 patent claims, the motion for summary judgment of noninfringement remains under advisement. The parties are invited to propose a candidate or candidates to serve as the Court's technical advisor on the technology underlying those claims.

As to the '769 patent, MediaCom has failed to demonstrate that it is entitled to a judgment of noninfringement. Based on the claims as herein construed, the trier of fact could reasonably find infringement on each of the three elements that MediaCom has advanced. The motion for summary judgment as to the '769 patent is therefore denied.

APPENDIX A

UNITED STATES DISTRICT COURT DISTRICT OF MASSACHUSETTS

CIVIL ACTION NUMBER 95-10496-RGS

BIOGEN, INC.

v.

AMGEN, INC.

MEMORANDUM AND ORDER FOR THE ENGAGEMENT OF DR. JONATHAN L. TILLY AS TECHNICAL ADVISOR

December 10, 1996

Stearns, D.J.
On November 7, 1996, during an *in camera* conference, the court notified the parties of its proposal to appoint a technical advisor in this action, Dr. Jonathan L. Tilly, and discussed his intended role. Subsequently, the court provided the parties with Dr. Tilly's curriculum vitae, and invited their written comments. Having considered the comments of the parties, the court pursuant to its inherent authority appoints Dr. Tilly as its technical advisor in this action, according to the terms and conditions set forth below. The court does so because of its conviction that this case in its scientific complexity is one of those rare " extraordinary cases where the introduction of outside skills and expertise, not possessed by the judge, will hasten the just adjudication of a dispute without dislodging the delicate balance of the juristic role."*Reilly v. United States,* 863 F.2d 149, 156 (1st Cir.1988).

Dr. Tilly shall as the court's technical advisor assist the court in educating itself in the terminology and theory disclosed by the evidence as the court deems necessary. He will act as a sounding board for the court's ***36** assessment of the scientific significance of the evidence, and he will assist the court in determining the validity of any scientific evidence, hypothesis or theory on which the experts base their testimony. In so doing, Dr. Tilly will function as a confidential advisor to the court analogous to the role performed by a judicial clerk. Dr. Tilly will not be called upon to testify. He will not act as a finder of fact nor will he attempt to advise the court on any matter of law.

In accepting this engagement, Dr. Tilly has affirmed to the court that he is a neutral third party in regard to this action, that he has no ideological, financial or professional interest in the outcome of the litigation, and that he will respond to questions concerning technical or scientific terminology or theory in a manner consistent with his best understanding of relevant, generally accepted scientific knowledge. Dr. Tilly further has affirmed that he has never had, does not presently have, and does not anticipate entering into any future financial, business or personal relationship with either litigant, including stock ownership, grant money, consulting contracts or employment, and will not do so while this action is pending. Nor will he use or seek to benefit from any confidential information that he may acquire in the course of this employment. Dr. Tilly also has affirmed that he has no financial, business or personal relationship with any of the witnesses identified in the Rule

© 2007 Thomson/West. No Claim to Orig. U.S. Govt. Works.

26(a)(1) initial disclosures of Biogen and Amgen, which are attached to this Order.

Should Dr. Tilly become aware of any conflict or potential conflict, he has agreed to inform the court immediately. In such event, the court will inform the parties, and either seek their comments or terminate Dr. Tilly's engagement *sua sponte.*

Dr. Tilly has agreed that his communications with the court and any information shown or provided to him by the court in connection with this litigation are to be treated as confidential. This requirement of confidentiality shall not apply to the fact of his engagement, the amount of any compensation he is paid, information available in public records, or any other matter specified in writing by the court. Dr. Tilly has further agreed that he will not engage in any independent investigation of the underlying litigation, provide evidence to the court, or contact any party or witness in this action. The court will identify for the parties any materials used by Dr. Tilly in providing advice to the court other than those submitted by the parties or those upon which a person versed in the relevant field of knowledge would be reasonably expected to rely. The parties, including their experts and consultants, are ordered not to have any communication with Dr. Tilly except in the presence of the court. Should any party contact Dr. Tilly (except to provide payment as set forth below), or should any person seek to communicate with him about the substantive issues involved in this litigation, he will inform the court immediately of all facts and circumstances concerning such contact.

The parties have been advised that, consistent with the nature of his engagement, the court anticipates having direct *ex parte* communications with Dr. Tilly. Should the court, however, ask Dr. Tilly to prepare any written submission for the court, a copy of any such submission will be provided to the parties (except written comments by Dr. Tilly on drafts of the court's own opinions). Should either party believe that any such written submission contains errors of fact, that party may so advise the court in writing.

Dr. Tilly shall keep track of his time and submit a monthly statement to the court showing the hours expended. The parties are each directed to pay one-half of Dr. Tilly's compensation, at a total rate of $175 per hour for time spent reviewing materials at the court's request, and a total rate of $225 per hour for time spent in providing direct consultation to the court. Payments shall be made within 45 days after receipt by the parties of copies of Dr. Tilly's billing statements approved by the court. The court taxes such costs to the parties pursuant to its inherent power to do so in the interest of promoting the efficient conduct of this complex litigation. See *Two Appeals (San Juan Dupont Plaza Hotel Fire Litig.),* 994 F.2d 956 (1st Cir.1993).

***37** Dr. Tilly will execute an affidavit indicating his understanding of this Order prior to beginning his engagement. He will at the conclusion of his employment file an affidavit attesting to his compliance with the terms of this Order.

SO ORDERED.

Richard G. Stearns

UNITED STATES DISTRICT JUDGE

APPENDIX B

UNITED STATES DISTRICT COURT DISTRICT OF MASSACHUSETTS

CIVIL ACTION NUMBER 95-10496-RGS

BIOGEN, INC.

v.

AMGEN, INC.

AFFIDAVIT OF ENGAGEMENT

December 10, 1996

© 2007 Thomson/West. No Claim to Orig. U.S. Govt. Works.

4 F.Supp.2d 17
(Cite as: 4 F.Supp.2d 17)

I, Dr. Jonathan Lee Tilly, declare under penalty of perjury under the laws of the United States as follows:

1. I agree to act as the court's technical advisor in this action. I will assist the court in educating itself in the terminology and theory disclosed by the evidence as the court deems necessary. I will act as a sounding board for the court to think through the scientific significance of the evidence, and will assist the court in determining the validity of any scientific evidence, hypothesis or theory on which the experts base their testimony. In so doing, I will to the best of my ability respond in a manner consistent with generally accepted knowledge in the relevant area.

2. I understand and agree that I am not to engage in any independent investigation of the litigation, provide evidence to the court, or contact any party or witness in this action.

3. I hereby certify that I have read and that I understand the terms of the Stipulated Protective Order ("Protective Order") between Biogen, Inc., and Amgen Inc., and agree to be bound by its terms. I understand and agree that my communications with the court on this matter and any information shown or provided to me by the court are to be treated as confidential. I understand that this requirement of confidentiality shall not apply to the fact of my engagement, the amount of compensation I receive, information available to me from public records, or any matter otherwise specified in writing by the court.

4. I affirm that the Curriculum Vitae provided by me to the court was accurate and complete in all material respects.

5. I affirm that I am a neutral third party in regard to this action, with no ideological, financial or professional interest in the outcome of the litigation.

6. I affirm that I have never had, nor presently have, nor anticipate in the future having any financial, business or personal relationship with either party, including stock ownership, grant money, consulting or employment.

7. I affirm that I have no financial, business or personal relationship with any of the witnesses identified in the Rule 26(a)(1) initial disclosures of Biogen and Amgen.

8. I agree that I will not acquire any stock in either party until final resolution of this action, nor use or seek to benefit from any confidential information I may acquire in the course of this engagement.

9. I understand and agree that if I become aware of any conflict or potential conflict, including any grant money or other compensation going to Vincent Memorial Hospital, my current employer from either party, that I am to inform the court immediately.

10. I understand and agree that should any party contact me (except to provide payment as set forth in the Order), or should any person seek to communicate with me about any substantive issue in this litigation, I will inform the court immediately of all facts and circumstances concerning such contact.

11. I agree to keep accurate records of my time and submit a monthly statement for the court's approval showing the hours I ***38** have expended on matters referred to me by the court.

Executed this 10th day of December 1996.
/s/ Jonathan Lee Tilly

/s/ JONATHAN LEE TILLY

D.Mass.,1998.
MediaCom Corp. v. Rates Technology, Inc.
4 F.Supp.2d 17

END OF DOCUMENT

© 2007 Thomson/West. No Claim to Orig. U.S. Govt. Works.

CLOSED

United States District Court
District of Massachusetts (Boston)
CIVIL DOCKET FOR CASE #: 1:97-cv-10559-WGY

Mediacom Corporation v. Rates Technology,
Assigned to: Judge William G. Young
Demand: $0
Cause: 28:2201 Declaratory Judgement

Date Filed: 03/10/1997
Date Terminated: 03/22/1999
Jury Demand: Defendant
Nature of Suit: 830 Patent
Jurisdiction: Federal Question

Plaintiff

Mediacom Corporation

represented by **Joseph A. Capraro**
Proskauer Rose LLP
One Internationl Place
14th Floor
Boston, MA 02110
617-526-9800
Email:
JCAPRARO@PROSKAUER.COM
LEAD ATTORNEY
ATTORNEY TO BE NOTICED

Robert N. Feldman
Birnbaum & Associates, P.C.
268 Summer Street
Boston, MA 02210-1108
617-307-6100
Fax: 617-307-6101
Email: feldman@birnbaumgodkin.com
LEAD ATTORNEY
ATTORNEY TO BE NOTICED

Steven M. Bauer
Proskauer Rose LLP
One International Place
22nd Floor
Boston, MA 02110
617-526-9700
Fax: 617-526-9899
Email: sbauer@proskauer.com
LEAD ATTORNEY
ATTORNEY TO BE NOTICED

V.

Defendant

Inc.

represented by **Erik Paul Belt**
Bromberg & Sunstein
125 Summer Street
Boston, MA 02110-1618
617-443-9292
Fax: 617-443-0004
Email: ebelt@bromsun.com
TERMINATED: 02/22/1999
LEAD ATTORNEY
ATTORNEY TO BE NOTICED

Lee C. Bromberg
Bromberg & Sunstein LLP
125 Summer Street
Boston, MA 02110
617-443-9292
Fax: 617-443-0004
Email: lbromberg@bromsun.com
TERMINATED: 02/22/1999
LEAD ATTORNEY
ATTORNEY TO BE NOTICED

Robert M. Asher
Bromberg & Sunstein
11th Floor
125 Summer Street
Boston, MA 02110-1618
617-443-9292
Fax: 617-443-0004
Email: rasher@bromsun.com
TERMINATED: 02/22/1999
LEAD ATTORNEY
ATTORNEY TO BE NOTICED

Robert L. Kann
Bromberg & Sunstein LLP
125 Summer Street
Boston, MA 02110
617 443-9292
Fax: 617-443-0004
Email: rkann@bromsun.com
TERMINATED: 02/22/1999
LEAD ATTORNEY
ATTORNEY TO BE NOTICED

Counter Claimant

Inc.

represented by **Erik Paul Belt**
(See above for address)
TERMINATED: 02/22/1999
LEAD ATTORNEY

ATTORNEY TO BE NOTICED

Lee C. Bromberg
(See above for address)
TERMINATED: 02/22/1999
LEAD ATTORNEY
ATTORNEY TO BE NOTICED

Robert M. Asher
(See above for address)
TERMINATED: 02/22/1999
LEAD ATTORNEY
ATTORNEY TO BE NOTICED

Robert L. Kann
(See above for address)
TERMINATED: 02/22/1999
LEAD ATTORNEY
ATTORNEY TO BE NOTICED

V.

Counter Defendant

Mediacom Corporation represented by **Joseph A. Capraro**
(See above for address)
LEAD ATTORNEY
ATTORNEY TO BE NOTICED

Robert N. Feldman
(See above for address)
LEAD ATTORNEY
ATTORNEY TO BE NOTICED

Steven M. Bauer
(See above for address)
LEAD ATTORNEY
ATTORNEY TO BE NOTICED

Counter Claimant

Inc. represented by **Erik Paul Belt**
(See above for address)
TERMINATED: 02/22/1999
LEAD ATTORNEY
ATTORNEY TO BE NOTICED

Lee C. Bromberg
(See above for address)
TERMINATED: 02/22/1999
LEAD ATTORNEY
ATTORNEY TO BE NOTICED

Robert M. Asher
(See above for address)
TERMINATED: 02/22/1999
LEAD ATTORNEY
ATTORNEY TO BE NOTICED

Robert L. Kann
(See above for address)
TERMINATED: 02/22/1999
LEAD ATTORNEY
ATTORNEY TO BE NOTICED

V.

Counter Defendant

Mediacom Corporation represented by **Joseph A. Capraro**
(See above for address)
LEAD ATTORNEY
ATTORNEY TO BE NOTICED

Robert N. Feldman
(See above for address)
LEAD ATTORNEY
ATTORNEY TO BE NOTICED

Steven M. Bauer
(See above for address)
LEAD ATTORNEY
ATTORNEY TO BE NOTICED

Date Filed	#	Docket Text
03/10/1997	1	Complaint filed. Case assigned to Judge: Young. Receipt #: 121605 Amount:$ 150.00. Fee Status: paid (dms) (Entered: 03/12/1997)
03/10/1997		Summons issued for Rates Technology, (dms) (Entered: 03/12/1997)
03/17/1997	2	Amended complaint by Mediacom Corporation filed. (Answer due 3/27/97 for Rates Technology,) . Amended complaint amends [1-1] complaint ; adding counts. (dms) (Entered: 03/18/1997)
06/12/1997	3	Return of service executed as to Rates Technology, with service on 6/2/97 filed. Answer due on 6/23/97 for Rates Technology, (dms) (Entered: 06/13/1997)
06/13/1997		report on the filing or determination of an action regarding a patent or trademark (dms) (Entered: 06/19/1997)
06/17/1997	4	STIPULATION by Rates Technology, to extend time to 7/10/97 to respond to amended complaint , filed. (dms) (Entered: 06/19/1997)

06/26/1997	5	Motion by Rates Technology, to dismiss , filed. (dms) (Entered: 06/26/1997)
06/26/1997	6	Memorandum by Rates Technology, in support of [5-1] motion to dismiss , filed. (dms) (Entered: 06/26/1997)
06/26/1997	7	Affidavit of Gerald J. Weinberger, re: [5-1] motion to dismiss , filed. (dms) (Entered: 06/26/1997)
07/07/1997		Judge William G. Young . Endorsed Order entered, Motion hearing set for 2:00 9/23/97 for [5-1] motion to dismiss .Opposition is due by July 10,1997. Reply brief, if any, is due by 7/24/97. (dms) (Entered: 07/07/1997)
07/07/1997	8	Motion by Mediacom Corporation to extend time to 30 days from the date of its order approving this motion to oppose motion to dismiss , and To expedite discovery , filed. (dms) (Entered: 07/08/1997)
07/07/1997	9	Memorandum by Mediacom Corporation in support of [8-1] motion to extend time to 30 days from the date of its order approving this motion to oppose motion to dismiss, [8-2] motion To expedite discovery , filed. (dms) (Entered: 07/08/1997)
07/09/1997	10	Judge William G. Young . Notice of Hearing/conference: set 16.1 scheduling conference for 2:00 9/3/97 . (efs) (Entered: 07/09/1997)
07/16/1997	11	Response by Rates Technology, in opposition to [8-1] motion to extend time to 30 days from the date of its order approving this motion to oppose motion to dismiss, [8-2] motion To expedite discovery , filed. (dms) (Entered: 07/17/1997)
07/16/1997	12	Memorandum by Rates Technology, in opposition to [8-1] motion to extend time to 30 days from the date of its order approving this motion to oppose motion to dismiss, [8-2] motion To expedite discovery , filed. (dms) (Entered: 07/17/1997)
07/16/1997	13	Motion by Rates Technology, for protective order , filed. (dms) (Entered: 07/17/1997)
07/16/1997	12	Memorandum by Rates Technology, in support of [13-1] motion for protective order , filed. (dms) (Entered: 07/17/1997)
07/16/1997	14	Supplemental Affidavit of Gerald J. Weinberger, re: [13-1] motion for protective order, [5-1] motion to dismiss , filed. (dms) (Entered: 07/17/1997)
07/21/1997	15	Response by Mediacom Corporation in opposition to [13-1] motion for protective order , filed. (dms) (Entered: 07/22/1997)
07/21/1997	15	Reply by Mediacom Corporation to response to [8-1] motion to extend time to 30 days from the date of its order approving this motion to oppose motion to dismiss, [8-2] motion To expedite discovery , filed. (dms) (Entered: 07/22/1997)
07/23/1997		Judge William G. Young . Endorsed Order entered denying [13-1]

		motion for protective order . (dms) (Entered: 07/23/1997)
07/23/1997		Judge William G. Young . Endorsed Order entered granting [8-1] motion to extend time to 30 days from the date of its order approving this motion to oppose motion to dismiss, granting [8-2] motion To expedite discovery . "Motion allowed as modified: a. One deposition, not two. Plaintiff can choose which one. b. Interrogatories and requested documents only as allowed by the court. See attached proposed discovery." cc/cl (dms) (Entered: 07/23/1997)
07/23/1997	16	Motion by Rates Technology, for leave to file reply , filed. (dms) (Entered: 07/24/1997)
07/23/1997	17	Reply by Rates Technology, to response to [13-1] motion for protective order , filed. (dms) (Entered: 07/24/1997)
07/24/1997		Judge William G. Young . Endorsed Order entered granting [16-1] motion for leave to file reply . (dms) (Entered: 07/24/1997)
08/07/1997	18	Joint motion by Mediacom Corporation, Rates Technology, for protective order , filed. . (dms) (Entered: 08/07/1997)
08/08/1997	19	Judge Reginald C. Lindsay . Stipulatged Protective Order entered granting [18-1] joint motion for protective order . (dms) (Entered: 08/08/1997)
08/22/1997	20	Memorandum by Mediacom Corporation in opposition to [5-1] motion to dismiss , filed. (efs) (Entered: 08/26/1997)
08/22/1997	21	STIPULATION by Mediacom Corporation, Rates Technology, to seal/impound Appendix to Opposition to Motion toDismiss , filed. (efs) (Entered: 08/26/1997)
08/22/1997	27	Appendix/exhibits by Mediacom Corporation in support of [20-1] opposition memorandum , filed (UNDER SEAL). (dms) (Entered: 09/23/1997)
09/03/1997	22	Joint motion by Mediacom Corporation, Rates Technology, Case Management Proposal , filed. . (efs) (Entered: 09/04/1997)
09/03/1997		Scheduling conference held . (dms) (Entered: 09/09/1997)
09/03/1997	23	Judge William G. Young . Clerk's Notes: re: scheduling conference, set pretrial conference for 9/7/98 , set Jury trial for 10/5/98 . Court inquires of counsel as to filing of joint case management proposal and consent to proceeding before magistrate. ADR pamphlet issued. Court explains requirements of session. (dms) (Entered: 09/09/1997)
09/04/1997		Judge William G. Young . Endorsed Order entered grantingAs Modified [22-1] joint motion Case Management Proposal, set discovery due for 6/19/98 , set dispositive motion filing deadline 7/15/98 . cc/cl (efs) (Entered: 09/04/1997)
09/11/1997	24	STIPULATION by Rates Technology, for leave to file reply , filed. (dms) (Entered: 09/12/1997)

09/11/1997	25	Reply by Rates Technology, to response to [5-1] motion to dismiss , filed. (dms) (Entered: 09/12/1997)
09/22/1997	26	Notice by Rates Technology, withdrawing [5-1] motion to dismiss , filed. (dms) (Entered: 09/22/1997)
10/07/1997	28	Answer to complaint; jury demand and Counterclaim by Rates Technology, against Mediacom Corporation , filed. (dms) (Entered: 10/08/1997)
10/15/1997	29	Document disclosure by Rates Technology, (Preliminary Statement of Proposed Patent Claim Construction) ,filed. (dms) (Entered: 10/16/1997)
10/21/1997	30	Answer by Mediacom Corporation to [28-2] counter claim , filed. (efs) (Entered: 10/22/1997)
10/21/1997	32	(SECOND) Amended complaint by Mediacom Corporation filed. (Answer due 10/31/97 for Rates Technology,) . Amended complaint amends [1-1] complaint ; adding . (dms) (Entered: 11/06/1997)
10/22/1997	31	Response by Rates Technology, in opposition to [29-1] miscellaneous , filed. (efs) (Entered: 10/24/1997)
11/05/1997	33	Answer to complaint; jury demand and Counterclaim by Rates Technology, against Mediacom Corporation , filed. (dms) (Entered: 11/06/1997)
11/05/1997	34	Motion by Rates Technology, to dismiss portions of second amended complaint , filed. (dms) (Entered: 11/06/1997)
11/05/1997	35	Memorandum by Rates Technology, in support of [34-1] motion to dismiss portions of second amended complaint and to strike improper affirmative defenses, filed. (dms) (Entered: 11/06/1997)
11/05/1997	37	Motion by Rates Technology, to compel deposition and for EXPEDITED consideration , filed. (dms) (Entered: 11/06/1997)
11/06/1997	36	Motion by Rates Technology, to strike improper affirmative defenses , filed. (dms) (Entered: 11/06/1997)
11/12/1997		Judge William G. Young . Endorsed Order entered, Motion hearing set for 2:00 12/15/97 for [34-1] motion to dismiss portions of second amended complaint .Opposition is due by 11/19/97...Reply brief, if any, is due by 12/3/97. cc/cl (efs) (Entered: 11/12/1997)
11/12/1997		Judge William G. Young . Endorsed Order entered granting in part, denying in part [37-1] motion to compel deposition and for EXPEDITED consideration . "Mr. Joel will not testify in the Markman hearing in any respect. In fact, no one will testify unless the Court so orders. The Markman hearing will proceed as follows: 1. Argument concerning the claims themselves. If the matter is not resolved, then 2. Argument concerning the file wrapper. If the matter is not resolved, then affidavits from alleged experts, not Mr. Joel, and argument thereon. Only if the matter is not by then resolved will the Court entertain oral testimony." A

		Markman hrg, if needed will take place on Mon. Dec. 15, 1997 at 2PM. cc/cl (efs) (Entered: 11/12/1997)
11/19/1997	38	Response by Mediacom Corporation in opposition to [36-1] motion to strike improper affirmative defenses, [34-1] motion to dismiss portions of second amended complaint , filed. (dms) (Entered: 11/20/1997)
11/20/1997	39	Reply/response by Mediacom Corporation to RTI's amended counterclaims, filed. (dms) (Entered: 11/20/1997)
11/20/1997	40	Stipulation of dismissal of counts 1 and 1V-V11 of Mediacom; s second amended complaint by Mediacom Corporation, Rates Technology, prejudice, filed. (dms) (Entered: 11/21/1997)
11/21/1997	41	Motion by Mediacom Corporation to modify Order of 11/12/97 , filed. (dms) (Entered: 11/25/1997)
11/25/1997	42	Motion by Mediacom Corporation For seperate and sequential claim construction , and for summary judgment on non-infringement of U.S. Patent No. 5,519,769 , filed. (dms) Modified on 11/26/1997 (Entered: 11/26/1997)
11/25/1997	43	Memorandum by Mediacom Corporation in support of [42-1] motion For seperate and sequential claim construction, [42-2] motion for summary judgment , filed. (dms) (Entered: 11/26/1997)
11/25/1997	44	Motion by Mediacom Corporation For seperate and sequential claim construction , and for summary judgment of non-infringement of U.S. Patent No. 5,425,085 , filed. (dms) (Entered: 11/26/1997)
11/25/1997	45	Memorandum by Mediacom Corporation in support of [44-1] motion For seperate and sequential claim construction, [44-2] motion for summary judgment of non-infringement of U.S. Patent No. 5,425,085 , filed. (dms) (Entered: 11/26/1997)
11/25/1997	46	Statement of Facts by Mediacom Corporation re: [44-1] motion For seperate and sequential claim construction, [44-2] motion for summary judgment of non-infringement of U.S. Patent No. 5,425,085, [42-1] motion For seperate and sequential claim construction, [42-2] motion for summary judgment , filed. (dms) (Entered: 11/26/1997)
11/25/1997	47	Affidavit of Robert L. Pokress , re: [44-1] motion For seperate and sequential claim construction, [44-2] motion for summary judgment of non-infringement of U.S. Patent No. 5,425,085, [42-1] For seperate and sequential claim construction, [42-2] motion for summary judgment , filed. (dms) (Entered: 11/26/1997)
11/25/1997	48	Affidavit of Joseph A. Capraro , re: [44-1] motion For seperate and sequential claim construction, [44-2] motion for summary judgment of non-infringement of U.S. Patent No. 5,425,085, [42-1] motion For seperate and sequential claim construction, [42-2] motion for summary judgment , filed. (dms) (Entered: 11/26/1997)
12/01/1997	49	Motion by Mediacom Corporation for clarification of [0-0] endorsed

		order set discovery due for 6/19/98 , filed. (dms) (Entered: 12/02/1997)
12/02/1997	50	Motion by Rates Technology, to compel discovery , filed. (dms) (Entered: 12/03/1997)
12/02/1997	51	Response by Rates Technology, in opposition to [49-1] motion for clarification of [0-0] endorsed order set discovery due for 6/19/98 , filed. (dms) (Entered: 12/03/1997)
12/02/1997	52	Motion by Rates Technology, to extend time to to oppose summary judgment , filed. (dms) (Entered: 12/03/1997)
12/02/1997	53	Affidavit of Erik P. Belt , re: [52-1] motion to extend time to to oppose summary judgment , filed. (dms) (Entered: 12/03/1997)
12/03/1997	54	Response by Mediacom Corporation in opposition to [50-1] motion to compel discovery , filed. (dms) (Entered: 12/03/1997)
12/03/1997	55	Response by Mediacom Corporation in opposition to [52-1] motion to extend time to to oppose summary judgment , filed. (dms) (Entered: 12/04/1997)
12/03/1997	56	Reply/response by Mediacom Corporation to RTI's opposition re: Markman Hearing Procedure, filed. (dms) (Entered: 12/04/1997)
12/03/1997	57	Response by Rates Technology, in opposition to [49-1] motion for clarification of [0-0] endorsed order set discovery due for 6/19/98 , filed. (dms) (Entered: 12/04/1997)
12/03/1997	58	Reply by Rates Technology, to response to [34-1] motion to dismiss portions of second amended complaint , filed. (dms) (Entered: 12/04/1997)
12/04/1997		Judge William G. Young . Endorsed Order entered denying [50-1] motion to compel discovery . (dms) (Entered: 12/05/1997)
12/04/1997		Judge William G. Young . Endorsed Order entered denying [41-1] motion to modify Order of 11/12/97 . (dms) (Entered: 12/05/1997)
12/04/1997		Judge William G. Young . Endorsed Order entered granting [49-1] motion for clarification of [0-0] endorsed order set discovery due for 6/19/98 . "Mediacom is correct." (dms) (Entered: 12/05/1997)
12/05/1997	59	Document disclosure by Mediacom Corporation ,filed....P's Claim Interpretation for US Patent Nos. 5,519,769 and 5,425,085. (efs) Modified on 12/05/1997 (Entered: 12/05/1997)
12/09/1997	60	Response by Rates Technology, in opposition to [42-1] motion For seperate and sequential claim construction , filed. (dms) (Entered: 12/10/1997)
12/09/1997	61	Cross motion by Rates Technology, for summary judgment , filed. (dms) (Entered: 12/10/1997)
12/09/1997	62	Memorandum by Rates Technology, in support of [61-1] cross motion

		for summary judgment , filed. (dms) (Entered: 12/10/1997)
12/09/1997	63	Affidavit of Stephen K. Burns, Ph.D. , re: [61-1] cross motion for summary judgment, [60-1] opposition response , filed. (dms) (Entered: 12/10/1997)
12/09/1997	64	Response by Rates Technology, in opposition to [44-1] motion For seperate and sequential claim construction , filed. (dms) (Entered: 12/10/1997)
12/09/1997	65	Motion by Rates Technology, to strike [47-1] affidavit of Robert L. Pokress , filed. (dms) (Entered: 12/10/1997)
12/09/1997	66	Appendix/exhibits by Rates Technology, in support of [65-1] motion to strike [47-1] affidavit of Robert L. Pokress, [64-1] opposition response, [63-1] affidavit, [62-1] support memorandum, [61-1] cross motion for summary judgment, [60-1] opposition response , filed. (dms) (Entered: 12/10/1997)
12/10/1997		Pre-trial conference held . (dms) (Entered: 12/12/1997)
12/10/1997	67	Judge William G. Young . Clerk's Notes: re: pretrial conference. Court informs counsel re: Markman hrg. on Monday Dec. 15 and entertains questions relative to that. Court reminds counsel that hrg. on Monday is a motion session with other cases. Court Reporter: Womack (dms) (Entered: 12/12/1997)
12/11/1997		Judge William G. Young . Endorsed Order entered denying [52-1] motion to extend time to to oppose summary judgment "but the unavailability of discovery may be urged under rule 56f has a ground for denying summary judgment." (dms) (Entered: 12/17/1997)
12/12/1997	68	Reply by Mediacom Corporation to response to [44-1] motion For seperate and sequential claim construction , filed. (dms) (Entered: 12/15/1997)
12/15/1997		Motion hearing re: [61-1] cross motion for summary judgment, [44-2] motion for summary judgment of non-infringement of U.S. Patent No. 5,425,085 (dms) (Entered: 12/16/1997)
12/15/1997	69	Judge William G. Young . Clerk's Notes: re: motion hearing [61-1] cross motion for summary judgment taken under advisement, [44-2] motion for summary judgment of non-infringement of U.S. Patent No. 5,425,085 taken under advisement, [42-2] motion for summary judgment on non-infringement of U.S. Patent No. 5,519,769 taken under advisement, [34-1] motion to dismiss portions of second amended complaint taken under advisement Court Reporter: Womack (dms) (Entered: 12/16/1997)
12/16/1997	70	Motion by Rates Technology, for leave to file surreply , filed. (dms) (Entered: 12/17/1997)
12/16/1997	71	Reply/response by Rates Technology, to [44-2] motion for summary judgment of non-infringement of U.S. Patent No. 5,425,085 , filed. (dms) (Entered: 12/19/1997)

12/19/1997		Judge William G. Young . Endorsed Order entered granting [70-1] motion for leave to file surreply . (dms) (Entered: 12/19/1997)
12/19/1997	72	Response by Mediacom Corporation in opposition to [65-1] motion to strike [47-1] affidavit of Robert L. Pokress , filed. (dms) (Entered: 12/23/1997)
12/19/1997	73	Response by Mediacom Corporation in opposition to RTI's cross-motion for claim construction, filed. (dms) (Entered: 12/23/1997)
01/14/1998	74	Transcript of proceedings for held on proceeding date: 12/10/97 before Judge: Young. Court Reporter: Womack (efs) (Entered: 01/14/1998)
01/14/1998	75	Transcript of proceedings for held on proceeding date: 12/15/97 before Judge: Young. Court Reporter: Womack (efs) (Entered: 01/14/1998)
01/28/1998	76	ASSENTED TO Motion by Mediacom Corporation for leave to file supplemental citation of authority in support of motions claim interpretation of summary judgment , filed. (dms) Modified on 01/28/1998 (Entered: 01/28/1998)
01/30/1998	77	Reply/response by Rates Technology, to [76-1] motion for leave to file supplemental citation of authority in support of motions claim interpretation of summary judgment , filed. (dms) (Entered: 02/02/1998)
04/16/1998	78	Judge William G. Young . Memorandum and Order entered. "CONCLUSION-As to the '085 patent claims, the motion for summary judgment of noninfringement remains under advisement. The parties are invited to propose a candidate or candidates as the Court's technical advisor on the technology underlying those claims. As to the '769 patent, MediaCom has failed to demonstrate that it is entitled to a judgment of noninfringement. Based on the claims as herein construed, the trier of fact could reasonably find infringement on each of the three elements that MediaCom has advanced. The motion for summary judgment as to the '769 patent is therefore denied." cc/cl (dms) (Entered: 04/17/1998)
05/18/1998	79	Objection and Motion by Rates Technology, for clarification of [78-1] memorandum order concerning use of a court-selected technical advisor , filed. c/s. (mlb) (Entered: 05/20/1998)
06/01/1998	83	Letter by Rates Technology, by Erik P. Belt dated: 6/1/98 to: Judge Young re: technical advisor filed. (efs) (Entered: 09/28/1998)
06/09/1998		Judge William G. Young . Endorsed Order entered denying [79-1] motion for clarification of [78-1] memorandum order concerning use of a court-selected technical advisor . "Objection overruled. The order stands" cc/cl (efs) (Entered: 06/09/1998)
08/14/1998	80	Judge William G. Young . Procedural Order entered re: Pretrial/Trial; Final Pretrial Conference set for 2:00 9/22/98 . cc/cl (efs) (Entered: 08/14/1998)
08/19/1998	81	Joint Motion by Mediacom Corporation, Rates Technology, to continue Final Pre-Trial Conference and Trial , filed. c/s. (efs) (Entered:

		08/20/1998)
08/19/1998	82	Joint Memorandum by Mediacom Corporation, Rates Technology, in support of [81-1] motion to continue Final Pre-Trial Conference and Trial , filed. (efs) (Entered: 08/20/1998)
08/25/1998		Judge William G. Young . Endorsed Order entered granting [81-1] motion to continue Final Pre-Trial Conference and Trial . (mlb) (Entered: 02/05/1999)
09/14/1998		Judge William G. Young . Endorsed Order entered granting [65-1] motion to strike [47-1] declaration of Robert L. Pokress . "Motio Alowed insofar as it deals with claim construction. Mr. Pokress may, of course, terstify to factual matters" cc/cl (efs) (Entered: 09/15/1998)
09/15/1998		Terminated document: denying [44-2] motion for summary judgment of non-infringement of U.S. Patent No. 5,425,085, mooting [42-1] motion For seperate and sequential claim construction, denying [42-2] motion for summary judgment on non-infringement of U.S. Patent No. 5,519,769, withdrawing [36-1] motion to strike improper affirmative defenses, withdrawing [34-1] motion to dismiss portions of second amended complaint Requested by wgy/efs. (efs) (Entered: 09/15/1998)
09/15/1998		Terminated document: granting [76-1] motion for leave to file supplemental citation of authority in support of motions claim interpretation of summary judgment Requested by wgy/efs. (efs) (Entered: 09/15/1998)
09/15/1998		Terminated document: granting [81-1] motion to continue Final Pre-Trial Conference and Trial Requested by wgy/efs. (efs) (Entered: 09/15/1998)
09/30/1998	84	Judge William G. Young. Order entered denying [61-1] cross motion for summary judgment, denying [44-1] motion For seperate and sequential claim construction. "The cross motions for summary judgment are denied. Opinion to follow." (lmh) (Entered: 09/30/1998)
12/15/1998	85	Judge William G. Young . Memorandum and Order entered. "Although the Court concludes that there is no genuine issue with respect to the "generating" element of the '085 patent, there remain unresolved issues with respect to the "disconnecting" element that must be submitted to the trier of fact. Because an accused device must embody every element of the patent claim, see Warner-Jenkinson Co. v. Hilton Davis Chem. Co., 520 U.S. 17, 117 S. Ct. 1040, 1054 (1997), and because neither party has succeeded in demonstrating that it is entitled to judgment, the motions for summary judgment are DENIED." See Document #85 for complete Memorandum and Order. cc/cl. (mlb) (Entered: 12/15/1998)
02/08/1999	86	Judge William G. Young . Notice of Hearing/conference: set status conference for 2:00 2/16/99 . cc/cl. (mlb) (Entered: 02/08/1999)
02/19/1999	87	Motion for Bromberg & Sunstein LLP, Lee Carl Bromberg, Robert M. Asher, and Erick Paul Belt to withdraw as counsel for Rates Technology Inc. , filed. c/s. (mlb) (Entered: 02/22/1999)

02/19/1999	88	Motion by Mediacom Corporation to approve Supplemnental Proposed Case Management Schedule , filed. c/s. (mlb) (Entered: 02/22/1999)
02/19/1999	89	Motion by Mediacom Corporation for summary judgment on invalidity and Non-Infringement of U.S. Patent No. 5,519,769 , filed. c/s. (mlb) (Entered: 02/22/1999)
02/19/1999	90	Memorandum by Mediacom Corporation in support of [89-1] motion for summary judgment on invalidity and Non-Infringement of U.S. Patent No. 5,519,769 , filed. c/s. (mlb) (Entered: 02/22/1999)
02/19/1999	91	Declaration of Robaert L. Pokress , re: [89-1] motion for summary judgment on invalidity and Non-Infringement of U.S. Patent No. , filed. (mlb) (Entered: 02/22/1999)
02/19/1999	92	Declaration of John M. Lull , re: [89-1] motion for summary judgment on invalidity and Non-Infringement of U.S. Patent No. 5,519,769, filed. (mlb) (Entered: 02/22/1999)
02/19/1999	93	Declaration of Michael T. Finnin , re: [89-1] motion for summary judgment on invalidity and Non-Infringement of U.S. Patent No. 5,519,769, filed. (mlb) (Entered: 02/22/1999)
02/22/1999		Judge William G. Young . Endorsed Order entered granting [87-1] motion for Bromberg & Sunstein LLP, Lee Carl Bromberg, Robert M. Asher, and Erick Paul Belt to withdraw as counsel for Rates Technology Inc. (Terminated attorney Robert L. Kann for Rates Technology, attorney Erik P. Belt for Rates Technology, attorney Lee C. Bromberg for Rates Technology, attorney Robert M. Asher for Rates Technology, attorney Robert L. Kann for Rates Technology, attorney Erik P. Belt for Rates Technology, attorney Lee C. Bromberg for Rates Technology, attorney Robert M. Asher for Rates Technology, attorney Robert M. Asher for Rates Technology, attorney Lee C. Bromberg for Rates Technology, attorney Erik P. Belt for Rates Technology, attorney Robert L. Kann for Rates Technology . cc/cl. (mlb) (Entered: 02/23/1999)
02/22/1999	94	Letter by Erik P. Belt dated: 2/22/99 to: Judge William G. Young re: Contact information for Rates Technology Inc: Mr. Gerald J. Weinberger, Pres., Crossroads corporate Center, Suite 218 North, 1393 Veterans Memorial Highway (Route 454), Hauppage, NY 11788-3067, Tel. #(516)360-0157, fax (516)360-0570. filed. (mlb) (Entered: 02/23/1999)
02/22/1999		Status conference held . (mlb) (Entered: 02/23/1999)
02/22/1999	95	Judge William G. Young . Clerk's Notes: re: Status Conference granting [87-1] motion for Bromberg & Sunstein LLP, Lee Carl Bromberg, Robert M. Asher, and Erick Paul Belt to withdraw as counsel for Rates Technology Inc. Mr. Bromberg will provide name of principal at Rates Technology in order that clerk may contact them. Granting [88-1] motion to approve Supplemental Proposed Case Management Schedule, Response due 3/22/99 to [89-1] motion for summary judgment on invalidity and Non-Infringement of U.S. Patent No. 5,519,769 , set Jury

		trial for 1/3/00 at 9:00 a.m. (mlb) (Entered: 02/23/1999)
02/23/1999	96	Notice of Attorney's Lien by Lee C. Bromberg , filed. c/s. (mlb) (Entered: 02/24/1999)
03/19/1999	97	Notice of appearance of attorney Bromberg and Belt for Rates Technology, Rates Technology, Rates Technology, by , filed. (efs) (Entered: 03/22/1999)
03/19/1999	98	Stipulation of dismissal by Mediacom Corporation, Rates Technology, Rates Technology, Mediacom Corporation, Rates Technology, Mediacom Corporation with prejudice, filed. (efs) (Entered: 03/22/1999)
03/22/1999		e closed. (efs) (Entered: 03/22/1999)

PACER Service Center

Transaction Receipt

05/21/2007 13:35:34

PACER Login:	hd0009	**Client Code:**	
Description:	Docket Report	**Search Criteria:**	1:97-cv-10559-WGY
Billable Pages:	8	**Cost:**	0.64

Exhibit H

Civil Action No. 07-441 JJF

Open LCR.com, Inc. v. Rates Technology, Inc. D.Colo.,2000.

United States District Court, D. Colorado.
OPEN LCR.COM, INC., a Delaware corporation, Sharp Corporation, a foreign corporation, and Sharp Electronics Corporation, a New York corporation, Plaintiffs,
v.
RATES TECHNOLOGY, INC., a New York corporation, Defendant.
No. Civ.A. 00-WY-631-CB.

Aug. 31, 2000.

Telephonic technology developer sued patentee, seeking declaratory judgment of noninfringement and asserting antitrust and tort claims. On patentee's motion to dismiss, the District Court, Brimmer, J., held that: (1) court had personal jurisdiction over patentee; (2) service of process was sufficient; (3) claim would not be dismissed as anticipatory; (4) allegations were sufficient to state claim within exception to *Noerr-Pennington* immunity from antitrust liability; and (5) patentee was not immune from claim that its threats of litigation were tortious.

Motion denied.

West Headnotes

[1] Federal Courts 170B ⚿96

170B Federal Courts
170BII Venue
170BII(A) In General
170Bk96 k. Affidavits and Other Evidence. Most Cited Cases
Plaintiff bears burden of establishing court's personal jurisdiction over defendant.

[2] Federal Courts 170B ⚿96

170B Federal Courts
170BII Venue
170BII(A) In General
170Bk96 k. Affidavits and Other Evidence. Most Cited Cases
Where issue is decided before trial on basis of affidavits and other papers, and without benefit of evidentiary hearing, plaintiff need only make prima facie showing of personal jurisdiction. Fed.Rules Civ.Proc.Rule 12(b)(2), 28 U.S.C.A.

[3] Courts 106 ⚿96(7)

106 Courts
106II Establishment, Organization, and Procedure
106II(G) Rules of Decision
106k88 Previous Decisions as Controlling or as Precedents
106k96 Decisions of United States Courts as Authority in Other United States Courts
106k96(7) k. Particular Questions or Subject Matter. Most Cited Cases
In patent case, when analyzing personal jurisdiction for purposes of federal due process, district courts apply law of Federal Circuit.

[4] Courts 106 ⚿12(2.1)

106 Courts
106I Nature, Extent, and Exercise of Jurisdiction in General
106k10 Jurisdiction of the Person
106k12 Domicile or Residence of Party
106k12(2) Actions by or Against Nonresidents; "Long-Arm" Jurisdiction in General
106k12(2.1) k. In General. Most Cited Cases
Under Colorado law, court may exercise personal jurisdiction to full extent of due process clause of Fourteenth Amendment. U.S.C.A. Const.Amend. 14 ; West's C.R.S.A. § 13-1-124.

[5] Patents 291 ⚿288(3)

291 Patents

© 2007 Thomson/West. No Claim to Orig. U.S. Govt. Works.

291XII Infringement
291XII(C) Suits in Equity
291k288 Jurisdiction
291k288(3) k. Residence and Place of Infringement. Most Cited Cases
Determination whether court can exercise specific jurisdiction over defendant in patent suit involves consideration of three factors: (1) whether defendant purposefully directed its activities at residents of forum, (2) whether claim arises out of or relates to those activities, and (3) whether assertion of personal jurisdiction is reasonable and fair. U.S.C.A. Const.Amend. 5.

[6] Patents 291 ⚿288(3)

291 Patents
291XII Infringement
291XII(C) Suits in Equity
291k288 Jurisdiction
291k288(3) k. Residence and Place of Infringement. Most Cited Cases
Court had specific personal jurisdiction over nonresident defendant patentee in declaratory judgment action where patentee had made multiple written and telephonic contacts in allegedly bad faith effort to intimidate plaintiff into obtaining license regardless of patent's validity. U.S.C.A. Const.Amend. 5.

[7] Patents 291 ⚿288(1)

291 Patents
291XII Infringement
291XII(C) Suits in Equity
291k288 Jurisdiction
291k288(1) k. In General. Most Cited Cases
Venue was proper, in declaratory judgment action against nonresident defendant patentee, in judicial district which had personal jurisdiction over corporate defendant. 28 U.S.C.A. § 1391(b, c).

[8] Federal Civil Procedure 170A ⚿1751

170A Federal Civil Procedure
170AXI Dismissal
170AXI(B) Involuntary Dismissal
170AXI(B)2 Grounds in General
170Ak1751 k. Process, Defects In. Most Cited Cases
Dismissal was not warranted for Delaware corporation on grounds of insufficient service of process, though suit was inadvertently brought against New York corporation of same name, absent showing of prejudice; intended defendant was served, had notice of suit, and timely responded to complaint.

[9] Federal Courts 170B ⚿1145

170B Federal Courts
170BXIII Concurrent and Conflicting Jurisdiction and Comity as Between Federal Courts
170Bk1145 k. Pendency and Scope of Prior Proceedings; Prisoners Under Arrest. Most Cited Cases
Claims raised in declaratory judgment action against patentee would not be dismissed under first-to-file rule after patentee had voluntarily dismissed its first-filed infringement action.

[10] Federal Courts 170B ⚿1145

170B Federal Courts
170BXIII Concurrent and Conflicting Jurisdiction and Comity as Between Federal Courts
170Bk1145 k. Pendency and Scope of Prior Proceedings; Prisoners Under Arrest. Most Cited Cases
Claims raised in declaratory judgment action against patentee would not be dismissed as having been improperly filed in anticipation of patentee's infringement suit; plaintiffs were entitled to benefits of first-to-file rule absent evidence that they had acted in bad faith or engaged in forum shopping.

[11] Federal Courts 170B ⚿1145

170B Federal Courts
170BXIII Concurrent and Conflicting Jurisdiction and Comity as Between Federal Courts
170Bk1145 k. Pendency and Scope of Prior Proceedings; Prisoners Under Arrest. Most Cited Cases
Where overlap between two lawsuits is less than complete, courts decide whether to apply first-to-file rule on case by case basis, based on

© 2007 Thomson/West. No Claim to Orig. U.S. Govt. Works.

such factors as extent of overlap, likelihood of conflict, comparative advantage and interest of each forum in resolving dispute.

[12] Antitrust and Trade Regulation 29T 905(3)

29T Antitrust and Trade Regulation
29TXI Antitrust Exemptions and Defenses
29Tk905 Efforts to Influence Government Action
29Tk905(3) k. Litigation; Sham Litigation. Most Cited Cases
(Formerly 265k12(16.5))
Allegations that patentee failed to disclose to Patent Office prior existence of technology which it now asserted was infringing, and that it had threatened and brought infringement claims without realistic expectation of success on merits, were sufficient to state claim within exception to *Noerr-Pennington* immunity from antitrust liability.

[13] Torts 379 437

379 Torts
379V Other Miscellaneous Torts
379k437 k. Resort to or Conduct of Legal Remedies. Most Cited Cases
(Formerly 379k14)
Noerr-Pennington immunity from antitrust liability does not extend to immunity from tort liability.

[14] Torts 379 122

379 Torts
379I In General
379k120 Defenses and Mitigating Circumstances
379k122 k. Litigation Privilege; Witness Immunity. Most Cited Cases
(Formerly 379k16)
Patentee's threats of infringement litigation were not protected activity under First Amendment, and thus did not render it immune from claim that threats were tortious; private threat was not petition addressed to government. U.S.C.A. Const.Amend. 1 .

Patents 291 328(2)

291 Patents
291XIII Decisions on the Validity, Construction, and Infringement of Particular Patents
291k328 Patents Enumerated
291k328(2) k. Original Utility. Most Cited Cases
4,122,308, 5,425,085, 5,519,769. Cited.

***1224** Tucker K. Trautman,Dorsey & Whitney, Denver, CO, for plaintiff.
James Hicks, David Warren, Arnold & Porter, Denver, CO, for defendant.

BRIMMER, District Judge.
Plaintiffs OpenLCR.com, Inc., Sharp Corporation, and Sharp Electronics Corporation bring this action against Rates Technology, Inc. ("RTI") seeking a declaration of noninfringement and/or unenforceability and invalidity of various patents held by RTI. Plaintiffs' Amended Complaint also alleges attempted monopolization in violation of 15 U.S.C. § 2, and state law causes of action for intentional interference with contractual relations and prospective business advantage. The Court exercises jurisdiction over this matter pursuant to 28 U.S.C. §§ 1331, 1337, 1338, 1367, and 2201(a).

Currently pending before the Court are two separate motions to dismiss by RTI. The first seeks dismissal for lack of personal jurisdiction, improper venue, insufficiency of process, and insufficiency of service of process pursuant to Rules 12(b)(2), (3), (4), and (5) of the Federal Rules of Civil Procedure. RTI's second motion seeks dismissal of Plaintiffs' antitrust and state law causes of action pursuant to Rule 12(b)(6) for failure to state a claim upon which relief can be granted. Having considered the parties' briefs and oral arguments, and being fully advised in the premises, the Court hereby **FINDS** and **ORDERS** as follows:

Background

OpenLCR is a Colorado corporation that develops and implements a technology known as least cost routing ("LCR") used in telephonic devices such as

© 2007 Thomson/West. No Claim to Orig. U.S. Govt. Works.

fax machines and telephones. LCR automatically selects the least expensive long-distance rate each time the user makes a long-distance telephone call. Sharp Electronics Corporation, a wholly owned subsidiary of the multinational Sharp Corporation, is engaged in, among other things, the manufacture and sale of fax machines. Defendant RTI, a ***1225** Delaware corporation [FN1] with its principal place of business in Hauppauge, New York, owns several patents relating to LCR technology.

FN1. The Plaintiffs incorrectly identified RTI as a New York corporation in the caption of their Amended Complaint.

According to allegations in the Amended Complaint, as early as 1987 one of OpenLCR's founders participated in the invention of a technology for routing calls from a telephone device to selected low-cost carriers. This technology, known as "Alpha-LCR," employs algorithms, loaded into a telephonic device, which pre-determine the routing of calls to selected carriers whose rate is lower for the day and time of each outgoing call. Alpha-LCR technology has been used commercially in Japan since approximately 1990. Sharp Corporation began using the technology in telephones it sold in Japan beginning in August 1992.

In October 1978, Gerald J. Weinberger, now president of RTI, received U.S.Patent No. 4,122,308 (the "'308 Patent") broadly disclosing LCR technology to be used with telephone devices. The '308 Patent expired in October 1995. In August 1994, as the protection period on the '308 Patent neared its end, Weinberger filed two more narrow patent applications on LCR technology. Although Weinberger cited the '308 Patent technology in both applications, he did not disclose the Alpha-LCR technology to the United States Patent Office. On or about June 13, 1995, the Patent Office issued U.S.Patent No. 5,425,085 entitled "Least Cost Routing Device For Separate Connection Into Phone Line" in the name of Weinberger and another individual as the inventors (the "'085 Patent"). On May 21, 1996, the Patent Office issued U.S.Patent No. 5,519,769 entitled "Method And System For Updating A Call Waiting Database" in the name of Weinberger and another individual as the inventors (the "'769 Patent").The '085 Patent discloses and claims a specific LCR device to be used between a telephone and the local telephone network-i.e., between the telephone and the wall jack. The '769 Patent discloses and claims a specific method for updating, when necessary, LCR billing rate parameters in a rating device. RTI is the assignee of both the '085 and '769 Patents.

In October 1999, OpenLCR contracted with Sharp to develop and market facsimile machines using OpenLCR's expanded version of the Alpha-LCR technology previously used in Japan. OpenLCR entered into a similar agreement with Casio Communications, Inc. (Casio) in January 2000. Casio intended to use OpenLCR's Alpha-LCR technology in an upcoming line of cordless telephones and answering machines.

Shortly after the public announcements of these business relationships, RTI, through Weinberger, began communicating with OpenLCR, the Sharp entities, and Casio claiming that OpenLCR's technology and products using that technology infringe on one or more claims of the '085 and '769 Patents. Plaintiffs responded to these communications by informing RTI that the OpenLCR's technology was based on the Alpha-LCR technology that had been in use in Japan since approximately 1988, well before Weinberger filed applications for the '085 and '769 Patents. Plaintiffs also made numerous requests for meetings with RTI to discuss issues relating to the alleged infringement and the validity of the RTI Patents in light of the earlier Alpha-LCR technology.

RTI refused to meet with Plaintiffs to discuss the validity of the '085 and '769 Patents, and threatened litigation unless OpenLCR agreed to enter into a license agreement. Over an approximately six-month period, from October 1999 through March 2000, Weinberger sent at least eight demand letters and made over fifty telephone calls to OpenLCR in Colorado. ***1226** He threatened to " shut [OpenLCR's business down," bring a "$100 million" patent infringement lawsuit against OpenLCR in New York, and contact the Sharp

© 2007 Thomson/West. No Claim to Orig. U.S. Govt. Works.

entities and Casio, who Weinberger predicted would cease doing business with OpenLCR. (Gallenstein Aff. ¶ 6.) RTI also contacted Casio to explain its intent to sue OpenLCR and the Sharp parties, and to inform Casio that it too would be sued unless it agreed to enter into a license agreement with RTI.

On March 24, 2000, OpenLCR brought suit in this Court against RTI seeking a declaration of noninfringement and invalidity of the '085 and '769 Patents. Five days later, on March 29, 2000, RTI filed a patent infringement action against OpenLCR and the Sharp parties in the United States District Court for the Southern District of New York. On May 5, 2000, RTI voluntarily dismissed the New York lawsuit in its entirety and then refiled the case in the United States District Court for the Eastern District of New York. RTI's Amended Complaint in the Eastern District of New York alleges a single cause of action for infringement of the '085 and '769 Patents, and names as defendants Sharp Document & Network Systems of America, Sharp Electronics Corporation, Sharp Corporation, and Home Shopping Network, Inc.

On April 7, 2000, approximately one month before RTI dismissed and then refiled the New York lawsuit, OpenLCR, joined by the Sharp parties, filed an Amended Complaint in this action. In addition to the declaratory relief, the Amended Complaint accuses RTI of attempted monopolization of the market for LCR technology and products using that technology, intentional interference with the OpenLCR-Sharp contract, intentional interference with the OpenLCR-Casio contract, and intentional interference with prospective business advantage. The Amended Complaint alleges that RTI's actions disrupted OpenLCR's performance of the Sharp and Casio contracts and caused OpenLCR to suffer a loss of profits.

RTI now moves to dismiss Plaintiffs' Amended Complaint for lack of personal jurisdiction, improper venue, insufficient process, and insufficient service of process, and to dismiss the Sharp parties under the "first-to-file" rule. RTI also moves to dismiss Plaintiffs' antitrust and state law tort claims for failure to state a claim upon which relief can be granted. The Court shall address each motion in turn.

Analysis

A. Defendant's Motion to Dismiss Pursuant to Rules 12(b)(2), (3), (4) and (5), and the First-to-File Rule

1. Personal Jurisdiction

[1][2] Plaintiffs bear the burden of establishing this Court's personal jurisdiction over RTI. *See Kuenzle v. HTM Sport-Und Freizeitgerate AG,* 102 F.3d 453, 456 (10th Cir.1996) (quoting *Behagen v. Amateur Basketball Ass'n,* 744 F.2d 731, 733 (10th Cir.1984)). Where, as in this case, the issue is decided before trial on the basis of affidavits and other papers, and without the benefit of an evidentiary hearing, a plaintiff need only make a prima facie showing of personal jurisdiction. *Id.*

[3] The Federal Circuit has exclusive jurisdiction over appeals from the district courts involving claims arising under the patent laws. *See*28 U.S.C.A. §§ 1295(a), 1338(a) (West 1993). In a patent case, when analyzing personal jurisdiction for purposes of federal due process, district courts apply the law of the Federal Circuit. *See Red Wing Shoe Co. v. Hockerson-Halberstadt, Inc.,* 148 F.3d 1355, 1358 (Fed.Cir.1998); *Akro Corp. v. Luker,* 45 F.3d 1541, 1544 (Fed.Cir.1995)."Personal jurisdiction over an out-of-state defendant is appropriate if the relevant state's long-arm statute permits the assertion of jurisdiction without violating federal due process."*3D Sys., Inc. v. Aarotech Labs., Inc.,* 160 F.3d 1373, 1376-77 (Fed.Cir.1998).

[4] For the first step of the analysis, the Court turns to Colorado's long-arm statute, which establishes personal jurisdiction***1227** over defendants who, either in person or by an agent, engage in various activities within the state including the transaction of business and the commission of a tortious act. *See*

© 2007 Thomson/West. No Claim to Orig. U.S. Govt. Works.

Colo.Rev.Stat. § 13-1-124(1)(a) - (b) (1999). Under Colorado law, this Court may exercise personal jurisdiction to the full extent of the due process clause of the Fourteenth Amendment. *See Dart Int'l, Inc. v. Interactive Target Sys., Inc.,* 877 F.Supp. 541, 543 (D.Colo.1995) (citing *Safari Outfitters, Inc. v. Superior Court,* 167 Colo. 456, 448 P.2d 783 (Colo.1968)). Thus, the Court's analysis collapses into a single inquiry, whether the exercise of personal jurisdiction over RTI comports with due process.

The Federal Circuit has determined "that the Due Process Clause at issue for personal jurisdiction in a patent case is that of the Fifth Amendment, and not the Fourteenth."*Red Wing Shoe,* 148 F.3d at 1358 n. * (citing *Akro,* 45 F.3d at 1544). However, as *Red Wing Shoe* acknowledged, the distinction is largely academic because the Federal Circuit, " though professing reliance on the Fifth Amendment, applies the Fourteenth Amendment state-contacts test of *International Shoe [Co. v. Washington,* 326 U.S. 310, 66 S.Ct. 154, 90 L.Ed. 95 (1945)]."*Id.*

[5] In *International Shoe,* the Supreme Court held that "due process requires only that in order to subject a defendant to a judgment in personam, if he be not present within the territory of the forum, he have certain minimum contacts with it such that the maintenance of the suit does not offend 'traditional notions of fair play and substantial justice.'"326 U.S. at 316, 66 S.Ct. 154 (quoting *Milliken v. Meyer,* 311 U.S. 457, 463, 61 S.Ct. 339, 85 L.Ed. 278 (1940)). The "minimum contacts" standard may be satisfied in either of two ways-general or specific jurisdiction. *See Kuenzle,* 102 F.3d at 455. General jurisdiction over the defendant exists where the defendant's contacts with the forum are " continuous and systematic." *See Trierweiler v. Croxton and Trench Holding Corp.,* 90 F.3d 1523, 1533 (10th Cir.1996) (quoting *Helicopteros Nacionales de Colombia, S.A. v. Hall,* 466 U.S. 408, 415-16 & n. 9, 104 S.Ct. 1868, 80 L.Ed.2d 404 (1984)). In this case, Plaintiffs do not argue that RTI is subject to the general jurisdiction of this Court. Instead, Plaintiffs contend that RTI has sufficient contacts with the forum state to subject it to the Court's specific jurisdiction. The determination whether a court can exercise specific jurisdiction over a defendant involves consideration of three factors: "(1) whether the defendant purposefully directed its activities at residents of the forum, (2) whether the claim arises out of or relates to those activities, and (3) whether assertion of personal jurisdiction is reasonable and fair."*3D Sys.,* 160 F.3d at 1378 (citing *Burger King Corp. v. Rudzewicz,* 471 U.S. 462, 472, 476-77, 105 S.Ct. 2174, 85 L.Ed.2d 528 (1985); *Akro,* 45 F.3d at 1545-46).

a. Purposefully Directed Activities

[6] In *Red Wing Shoe,* the Federal Circuit held that there was no personal jurisdiction over a defendant patentee in a declaratory judgment action where the patentee's only contacts with the forum were three cease-and-desist letters sent to the plaintiff. 148 F.3d at 1361-62. The court held that "[s]tandards of fairness demand that [the patentee] be insulated from personal jurisdiction in a distant forum when its only contacts with that forum were efforts to give proper notice of its patent rights."*Id.* at 1361.The vast majority of courts to address the issue have reached the same conclusion. *See Wise v. Lindamood,* 89 F.Supp.2d 1187, 1191 (D.Colo.1999) (citing cases). In this case, however, Plaintiffs allege that RTI's actions go well beyond simply sending a few cease and desist letters.

Plaintiffs allege, and have offered some evidence to prove, that RTI, through Weinberger, sent at least eight demand letters and made over fifty telephone calls to OpenLCR in Colorado. Throughout an approximately six-month period, Weinberger***1228** refused any discussion regarding the validity of the RTI Patents, apparently preferring to focus his efforts at intimidating OpenLCR with threats of litigation in order to convince OpenLCR that it was in their best interest to sign a license agreement. According to the affidavit of Thomas Gallenstein, director of business development at OpenLCR, Weinberger told OpenLCR that even if OpenLCR's technology did not infringe on the RTI Patents, " RTI still had a 20% chance of winning in court ... and that OpenLCR should simply make a business decision to enter a license agreement with RTI to avoid a costly litigation in New York."(Gallenstein

© 2007 Thomson/West. No Claim to Orig. U.S. Govt. Works.

Aff. ¶ 11.) This evidence indicates that RTI was more interested in negotiating a license agreement than enforcing its patent rights. *Cf. PDK Labs, Inc. v. Friedlander,* 103 F.3d 1105, 1109 (2d Cir.1997) (holding patentee defendant subject to personal jurisdiction where evidence showed that patentee's business consisted of using cease-and-desist letters to negotiate royalty agreements with alleged violators).

Moreover, Plaintiffs' evidence indicates that Weinberger persisted with threats of litigation against OpenLCR, Casio, and the Sharp parties despite receiving documentation from OpenLCR and the Sharp parties showing that Sharp's facsimile machines use Alpha-LCR technology, a technology that Plaintiffs contend predates conception of the technology embodied in the '085 and '769 Patents and renders these patents invalid. (Gallenstein Aff. ¶¶ 8-10.) While recognizing that Plaintiffs' tort claims for intentional interference with business relations "in what is essentially a patent case are not reliable bases for jurisdiction,"*see Kash 'N Gold v. ATSPI, Inc.,* 690 F.Supp. 1160, 1163 (E.D.N.Y.1988), the Court is reluctant to hold on the limited facts presented that Plaintiffs' have not established a prima facie case of personal jurisdiction. Allegations of tortious conduct and bad faith enforcement of patent rights similar to those brought by Plaintiffs have been deemed sufficient to establish a prima facie case. *See, e.g., Modern Computer v. Ma,* 862 F.Supp. 938, (E.D.N.Y.1994) (declining to dismiss for lack of personal jurisdiction where plaintiffs alleged tortious interference with business relations in the forum). A patentee's right to enforce its patents is not without limits. "[T]he owner of a patent has a right to threaten suit for infringement, provided he does so in good faith." *See Kash 'N Gold,* 690 F.Supp. at 1163 (quotation omitted). "In general, a threshold showing of incorrectness or falsity, or disregard for either, is required in order to find bad faith in the communication of information about the existence or pendency of patent rights." *Mikohn Gaming Corp. v. Acres Gaming, Inc.,* 165 F.3d 891, 897 (Fed.Cir.1998). In this case, the Court finds that Plaintiffs have made a threshold showing of bad faith on evidence that RTI persisted with threats of litigation while disregarding any possibility that Open-LCR's technology does not infringe RTI's patents. Accordingly, the Court holds that Plaintiffs have made a prima facie case that RTI's eight demand letters and over fifty telephone calls to OpenLCR and its business partners in an effort to force license agreements were not protected patent enforcement activities. Therefore, these activities can serve as bases for personal jurisdiction and satisfy the minimum contacts requirement of *International Shoe.*

b. Claim Arises out of or Relates to Activities

The Federal Circuit has observed that sending cease-and-desist letters may give rise to a declaratory judgment action in a distant forum provided that maintenance of personal jurisdiction comports with notions of " 'fair play and substantial justice.' " *See Red Wing Shoe,* 148 F.3d at 1360 (quoting *Burger King,* 471 U.S. at 476, 105 S.Ct. 2174).
In the event a patentee casts its net of cease-and-desist letters too widely and entangles some non-infringing products, a plaintiff may have little recourse other ***1229** than a declaratory judgment action to disentangle its non-infringing business. In those instances, the cease-and-desist letters are the cause of the entanglement and at least partially give rise to the plaintiff's action.

Red Wing Shoe, 148 F.3d at 1360. In this case, Plaintiffs have offered evidence to support their allegations that RTI had knowledge that its patents were invalid, yet persisted with threats of litigation to force OpenLCR and its business partners into license agreements. These minimum contacts clearly relate to Plaintiffs' cause of action seeking a declaration of invalidity of the RTI patents. It does not seem at all unreasonable that a patentee who knowingly attempts to force license agreements in a distant forum based on invalid patents should foresee being hailed into court in that forum. Under the circumstances, the Court finds that RTI's contacts are sufficiently related to Plaintiffs' declaratory judgment cause of action to satisfy due process.[FN2]

© 2007 Thomson/West. No Claim to Orig. U.S. Govt. Works.

FN2. Plaintiffs have argued that the minimum contacts standard is satisfied by RTI's other activities in the forum, including licensing the '308 Patent to companies that are either located in Colorado or that do business in Colorado, filing a previous patent infringement action in this Court to enforce the '308 Patent, and publicizing the LCR technology through the national media. The Court specifically rejects these contacts as establishing personal jurisdiction over RTI in this action; Plaintiffs' causes of action do not arise from or relate to these activities.

c. Reasonable and Fair

The third prong of the personal jurisdiction analysis "embodies the due process considerations of personal jurisdiction and places the burden on the party over whom jurisdiction is sought to prove that jurisdiction would be constitutionally unreasonable." *3D Sys.,* 160 F.3d at 1379-80. "[W]here a defendant who purposefully has directed his activities at forum residents seeks to defeat jurisdiction, he must present a compelling case that the presence of some other considerations would render jurisdiction unreasonable."*Burger King,* 471 U.S. at 477, 105 S.Ct. 2174.

RTI contends that its burden in having to litigate the patent issue in a distant forum vastly outweighs any interest of the Plaintiffs or the forum in adjudicating the dispute within the forum. The Court acknowledges the heavy burden imposed on RTI to defend this lawsuit. However, RTI cannot dispute Colorado's "manifest interest" in preventing harm to one of its residents caused by bad-faith enforcement of patent rights. *See Burger King,* 471 U.S. at 473, 105 S.Ct. 2174 ("A State generally has a manifest interest in providing its residents with a convenient forum for redressing injuries inflicted by out-of-state actors.") (internal quotation omitted). Nor does RTI raise any significant issue with respect to efficient resolution of this matter. Although RTI seeks dismissal of Plaintiffs' tort and antitrust claims under Rule 12(b)(6), it does not argue that it cannot be subjected to this Court's personal jurisdiction with respect to those claims. Indeed, because RTI admittedly conducts business within the United States, the Court has personal jurisdiction over RTI with respect to Plaintiffs' antitrust claims as a matter of law. *See*15 U.S.C.A. § 22 (West 1997) (authorizing nationwide service of process for antitrust proceedings), *and Application to Enforce Admin. Subpoenas Duces Tecum of the SEC v. Knowles,* 87 F.3d 413, 417 (10th Cir.1996) ("When the personal jurisdiction of a federal court is invoked based upon a federal statute providing for nationwide or worldwide service, the relevant inquiry is whether the respondent has had sufficient minimum contacts with the United States."). Also, while RTI objects to this forum, the record indicates that it voluntarily dismissed OpenLCR from the New York lawsuit because it did not believe OpenLCR was subject to personal jurisdiction in that forum. Thus, it appears that adjudication of the matter in this forum will provide the ***1230** most efficient resolution of the parties' dispute.

In sum, Plaintiffs' evidence at this early stage of the litigation provides at least some support for their allegations that RTI was more interested in potential licensing agreements than it was with enforcing patent rights, that RTI disregarded any possibility that its patents may be invalid, and that RTI intentionally interfered with OpenLCR's business relationships in an effort to force licensing agreements. Because the evidence indicates that RTI's actions exceeded simple enforcement of patent rights, the Court finds that Plaintiffs have established a prima facie case of personal jurisdiction.

2. Improper Venue

[7] RTI moves to dismiss for improper venue on grounds that it is not subject to this Court's personal jurisdiction. Having ruled that RTI is subject to personal jurisdiction, this motion must be denied. In non-diversity actions, venue is proper in any judicial district where the defendant resides. *See*28 U.S.C.A. § 1391(b) (West 1993). For purposes of venue, "a defendant that is a corporation shall be deemed to reside in any judicial district in which it is subject to personal jurisdiction at the time the

© 2007 Thomson/West. No Claim to Orig. U.S. Govt. Works.

action is commenced."*Id.* § 1391(c). Accordingly, RTI is deemed to reside in this judicial district and venue is proper.

3. Insufficient Process and Insufficient Service of Process

[8] RTI next seeks dismissal of Plaintiffs' Amended Complaint on grounds of insufficient process and insufficient service of process. Plaintiffs brought this action against "Rates Technology, Inc., a New York corporation," apparently a real company, but one totally unrelated to the intended Defendant, Rates Technology, Inc., a Delaware corporation. However, the Court finds that Plaintiffs' mistake was a mere technical error that resulted in no prejudice to RTI. RTI was served, had notice of the suit, and timely responded to the Amended Complaint. Because Plaintiffs' error did not result in prejudice to RTI, the Court must deny RTI's motion to dismiss for insufficient service of process and insufficient process. *See United States v. A.H. Fischer Lumber Co.,* 162 F.2d 872, 873 (4th Cir.1947) ("As a general rule the misnomer of a corporation in a notice, summons, ... or other step in a judicial proceeding is immaterial if it appears that it could not have been, or was not, misled."); 4A Charles A. Wright & Arthur R. Miller *Federal Practice and Procedure: Civil 2d* § 1088, at 32 (1987) (observing that dismissal is generally unwarranted absent indication that "the error actually results in defendant's prejudice or demonstrates a flagrant disregard of the requirements of [Rule 4]").

4. First-to-File Rule

[9] RTI seeks dismissal of claims brought by the Sharp parties on grounds that RTI filed the New York lawsuit over the same patents against the Sharp parties before the Sharp parties joined in filing the Amended Complaint in this case. RTI argues that the issues raised in Plaintiffs' Amended Complaint should have been brought as compulsory counterclaims to RTI's initial lawsuit against OpenLCR and the Sharp parties in New York. While this may be true, RTI voluntarily dismissed the initial New York lawsuit in its entirety. To now dismiss the Sharp parties from this action for failure to raise compulsory counterclaims in a lawsuit that no longer exists is, at best, unwarranted.

[10] In its briefs regarding this issue, RTI also contends that OpenLCR's initial Complaint in this action was filed in response to RTI's demand letters and in anticipation of RTI's filing suit in New York. RTI complains that Plaintiffs "are attempting to exploit the first-to-file rule by securing a venue that differs from the one that [RTI would have chosen]." (Def.'s Reply Br. at 20.) The Court interprets this as an assertion by RTI that equitable considerations require dismissal of this lawsuit***1231** in its entirety-i.e., RTI should not be deprived of its chosen forum simply because OpenLCR anticipated RTI's New York lawsuit.

The first-to-file rule may be invoked when a complaint raising the same issues against the same parties has previously been filed in another district court. *See Alltrade, Inc. v. Uniweld Products, Inc.,* 946 F.2d 622, 625 (9th Cir.1991). The rule serves to promote judicial efficiency by permitting district courts to decline jurisdiction over the later-in-time case. *See id.*RTI claims that although this lawsuit was first in time, RTI's New York lawsuit should be given priority because Plaintiffs filed this action in anticipation of RTI's New York litigation.

RTI is correct that anticipatory lawsuits, as well as lawsuits brought in bad faith, are exceptions to the first-to-file rule. *See id.* at 628.However, anticipatory filing of a declaratory judgment action is not improper where the opposing party has created a controversy by threatening litigation but has withheld filing suit. *See Topp-Cola Co. v. Coca-Cola Co.,* 314 F.2d 124, 125 (2d Cir.1963). In *800-Flowers, Inc. v. Intercontinental Florist, Inc.,* for example, the court found that a first-filed suit was not an improper anticipatory filing where it was filed "in response to the disparaging remarks" of a business adversary and "with the hope of deterring unfair trade tactics."860 F.Supp. 128, 133 (S.D.N.Y.1994); *see also Ontel Prods., Inc. v. Project Strategies Corp.,* 899 F.Supp. 1144, 1151-52 (S.D.N.Y.1995) (anticipatory action not improper where other party delays filing threatened

© 2007 Thomson/West. No Claim to Orig. U.S. Govt. Works.

action).

In this case, RTI has offered no evidence indicating that OpenLCR or the Sharp parties considered entering into licensing agreements with RTI. To the contrary, the evidence shows that Plaintiffs presented Weinberger with documentation that, according to Plaintiffs, demonstrates the invalidity of the '085 and '769 Patents. Despite receipt of this information, Weinberger apparently continued with threats of litigation against OpenLCR and users of OpenLCR's technology. The Court finds that under the circumstances, OpenLCR had a "legitimate and meritorious rationale for seeking a declaratory judgment,"*800-Flowers,* 860 F.Supp. at 133, and that RTI has failed to show that OpenLCR acted in bad faith or was engaged in forum shopping. Accordingly, OpenLCR should not be denied application of the first-to-file rule in this instance.

[11] Currently pending in the United States District Court for the Eastern District of New York is RTI's lawsuit against the Sharp parties and Home Shopping Network, Inc. alleging infringement of the '085 and '769 Patents. The overlap between RTI's New York lawsuit and this case is not complete; the cases involve at least some different parties and different legal issues. Where the overlap between two lawsuits is less than complete, courts decide whether to apply the first-to-file rule on a case by case basis, "based on such factors as the extent of overlap, the likelihood of conflict, the comparative advantage and the interest of each forum in resolving the dispute."*TPM Holdings, Inc. v. Intra-Gold Indus., Inc.,* 91 F.3d 1, 4 (1st Cir.1996). The Court acknowledges that resolution of Plaintiffs' tort and antitrust claims will necessarily involve resolution of the identical patent infringement actions currently pending in both courts, and that maintenance of two separate lawsuits involving the same patents and products presents a substantial likelihood for conflict. However, while both forums may share an interest in resolving the patent and antitrust issues, this forum clearly has a greater interest in resolving Plaintiffs' tort law causes of action involving questions of Colorado law. This interest provides an additional basis for the Court's decision to reject RTI's argument that this case should be dismissed under the first-to-file rule.

B. RTI's Motion to Dismiss Plaintiffs' Antitrust and State Law Tort Claims

RTI moves for dismissal of Plaintiffs' Second, Third, and Fourth Claims for Relief***1232** pursuant to Rule 12(b)(6) of the Federal Rules of Civil Procedure for failure to state a claim upon which relief can be granted.[FN3] A court should not grant a motion to dismiss "for failure to state a claim ' unless it appears beyond doubt that the plaintiff can prove no set of facts in support of his claim which would entitle him to relief.'"*Hall v. Bellmon,* 935 F.2d 1106, 1109 (10th Cir.1991) (quoting *Conley v. Gibson,* 355 U.S. 41, 45-46, 78 S.Ct. 99, 2 L.Ed.2d 80 (1957)). In considering a Rule 12(b)(6) motion, the court must accept all factual allegations in the plaintiff's complaint as true, and must draw all reasonable inferences in favor of the plaintiff. *See id.* "So long as the plaintiff offers evidence in support of a legally recognized claim for relief, a motion to dismiss must be denied."*Arkansas-Platte & Gulf Partnership v. Dow Chem. Co.,* 886 F.Supp. 762, 766 (D.Colo.1995) (citing *Hiatt v. Schreiber,* 599 F.Supp. 1142, 1145 (D.Colo.1984)).

FN3. As noted above, in addition to the declaratory judgment claim, Plaintiffs' Amended Complaint alleges a Second Claim for Relief for attempted monopolization, a Third Claim for Relief for tortious interference with the OpenLCR-Sharp contract, and a Fourth Claim for Relief for tortious interference with the OpenLCR-Casio contract and prospective business advantage of OpenLCR. Although RTI moves for dismissal of only the Second and Third Claims for Relief, RTI asserts that all of Plaintiffs' tort and antitrust claims are barred as a matter of law, and Plaintiffs have responded to this assertion. Accordingly, the Court shall treat the motion as seeking dismissal of Plaintiffs' Second, Third, and Fourth Claims for Relief.

© 2007 Thomson/West. No Claim to Orig. U.S. Govt. Works.

112 F.Supp.2d 1223
(Cite as: 112 F.Supp.2d 1223)

1. Antitrust Claim

[12] Plaintiffs' Second Claim for Relief alleges that RTI, through threats and institution of patent infringement litigation, has attempted to monopolize the United States market for LCR technology through unlawful means. Plaintiffs specifically allege that RTI failed to reasonably investigate whether OpenLCR's Alpha-LCR technology infringed the '085 and '769 Patents, and that RTI knowingly failed to disclose prior art to the Patent Office during prosecution of these patents. RTI seeks dismissal of Plaintiffs' antitrust claim on grounds that the claim is barred by the *Noerr-Pennington* doctrine.

The *Noerr-Pennington* doctrine provides that " [t]hose who petition government for redress are generally immune from antitrust liability."*See Professional Real Estate Investors, Inc. v. Columbia Pictures Indus., Inc.,* 508 U.S. 49, 56, 113 S.Ct. 1920, 123 L.Ed.2d 611 (1993) ("*PRE*"). The contours of *Noerr-Pennington* were established through a series of cases. In *Eastern R.R. Presidents Conference v. Noerr Motor Freight, Inc.,* the Supreme Court held that the Sherman Act generally does not punish those who associate together "in an attempt to persuade the legislature or the executive to take particular action with respect to a law that would produce a restraint or a monopoly."365 U.S. 127, 136, 81 S.Ct. 523, 5 L.Ed.2d 464 (1961). In *United Mine Workers v. Pennington,* the Court reiterated that "[j]oint efforts to influence public officials do not violate the antitrust laws even though intended to eliminate competition."381 U.S. 657, 670, 85 S.Ct. 1585, 14 L.Ed.2d 626 (1965). In *California Motor Transp. Co. v. Trucking Unlimited* , the Court extended *Noerr-Pennington* to "the approach of citizens or groups of them to administrative agencies ... and to courts."404 U.S. 508, 510, 92 S.Ct. 609, 30 L.Ed.2d 642 (1972). According to RTI, it cannot be held liable for antitrust violations for threatening and instituting the New York patent infringement litigation.

Courts have outlined two exceptions to *Noerr-Pennington* immunity.
A patentee who brings an infringement suit may be subject to antitrust liability for the anti-competitive effects of that suit if the alleged infringer (the antitrust plaintiff) proves (1) that the asserted patent was obtained through knowing and willful fraud within the meaning of ***1233***Walker Process Equipment, Inc. v. Food Machinery & Chemical Corp.,* 382 U.S. 172, 177, 86 S.Ct. 347, 15 L.Ed.2d 247 (1965), or (2) that the infringement suit was "a mere sham to cover what is actually nothing more than an attempt to interfere directly with the business relationships of a competitor," [*Noerr,* 365 U.S. at 144, 81 S.Ct. 523];....

See Nobelpharma AB v. Implant Innovations, Inc., 141 F.3d 1059, 1068 (Fed.Cir.1998) (additional citation omitted). To state a *Walker Process* claim, an antitrust plaintiff must prove that the patentee " obtained the patent by knowingly and willfully misrepresenting facts to the Patent Office."*Walker Process,* 382 U.S. at 177, 86 S.Ct. 347. A failure to disclose material information may also constitute fraudulent misrepresentation. *See Nobelpharma,* 141 F.3d at 1070. With respect to the second exception, the Supreme Court has outlined a two-part test for determining the existence of "sham " litigation. First, "the lawsuit must be objectively baseless in the sense that no reasonable litigant could realistically expect success on the merits." *PRE,* 508 U.S. at 60, 113 S.Ct. 1920. Only if the challenged litigation is objectively meritless does the court proceed to the second step of the analysis-examination of the litigant's subjective motivation to determine "whether the baseless lawsuit conceals 'an attempt to interfere directly with the business relationships of a competitor.'"*Id.* at 60-61, 113 S.Ct. 1920 (quoting *Noerr,* 365 U.S. at 144, 81 S.Ct. 523.) Here, Plaintiffs have alleged that Weinberger knowingly failed to disclose to the Patent Office material information concerning prior Alpha-LCR technology, the technology that RTI now asserts is infringing on the '085 and '769 Patents . Plaintiffs have also alleged that RTI's New York lawsuit constitutes sham litigation-i.e., that no reasonable litigant could realistically expect success on the merits given RTI's alleged fraud before the Patent Office, and that RTI brought its lawsuit with the subjective intent to harm OpenLCR's business relationships. Should Plaintiffs ultimately prove either set of allegations, RTI would not be entitled to immunity from antitrust liability under

© 2007 Thomson/West. No Claim to Orig. U.S. Govt. Works.

112 F.Supp.2d 1223
(Cite as: 112 F.Supp.2d 1223)

*Noerr-Pennington.*Accordingly, RTI's motion to dismiss Plaintiffs' antitrust claim must be denied.

2. Tort Claims

Plaintiffs' Third and Fourth Claims for Relief allege that RTI intentionally interfered with OpenLCR's contractual relationships and prospective business advantage by threatening and instituting patent infringement litigation. RTI seeks dismissal of these claims also on the basis of *Noerr-Pennington* immunity.

[13][14] The Tenth Circuit has determined that *Noerr-Pennington*, although based in part on constitutional principles, is not itself constitutional. *See Cardtoons v. Major League Baseball Players Ass'n,* 208 F.3d 885, 889-91 & n. 4 (10th Cir.2000). In other words, the doctrine is not grounded entirely in the Petition Clause of the First Amendment, but is applicable only to antitrust claims. *Id.* Thus, RTI is not immune from tort liability under *Noerr-Pennington.*Moreover, with respect to RTI's assertion that threatening patent litigation is a protected activity under the First Amendment, *Cardtoons* held that "purely private threats of litigation are not protected because there is no petition addressed to the government."*Id.* at 893;*see also Rodime PLC v. Seagate Technology, Inc.,* 174 F.3d 1294, 1307 (Fed.Cir.1999) (recognizing that contacts with patentee's potential licensees are not entitled to immunity because the contacts "had nothing to do with petitioning the government"). Accordingly RTI's threats of litigation against Plaintiffs are not immunized by the Petition Clause of the First Amendment.

This leaves the question of whether and to what extent the Petition Clause imposes limitations on Plaintiffs' tort law causes of action based not on RTI's threats of litigation, but on allegations that RTI filed a baseless lawsuit in an attempt to interfere with Plaintiffs' contractual relations and prospective business advantage. However, ***1234** because Plaintiffs may proceed with their tort law claims based on RTI's threats of litigation alone, the Court need not decide the question at this time. Furthermore, this issue is better resolved through a motion for summary judgment, with benefit of a more fully developed factual record. *See Protect Our Mountain Env't, Inc. v. District Court,* 677 P.2d 1361, 1368-69 (Colo.1984) (holding that when presented with a Rule 12(b)(6) motion to dismiss based on the right to petition, "the court should give the parties a reasonable opportunity to present all material pertinent to the motion and should treat the motion as one for summary judgment ...."), *cited in Scott v. Hern,* 216 F.3d 897, 913-16 (10th Cir.2000) . Therefore, the Court declines to address the issue at this time.

Conclusion

For reasons stated,

IT IS HEREBY ORDERED that Defendant's motion to dismiss for lack of personal jurisdiction, improper venue, insufficiency of process, insufficiency of service of process, and the first-to-file rule is **DENIED.**

IT IS FURTHER ORDERED that Defendant's Rule 12(b)(6) motion to dismiss Plaintiffs' Second, Third, and Fourth Claims for Relief is **DENIED.**

D.Colo.,2000.
OpenLCR.com, Inc. v. Rates Technology, Inc.
112 F.Supp.2d 1223

END OF DOCUMENT

© 2007 Thomson/West. No Claim to Orig. U.S. Govt. Works.

Exhibit I

Civil Action No. 07-441 JJF

FILED
CLERK, U.S. DISTRICT COURT
NOV 10 2004
CENTRAL DISTRICT OF CALIFORNIA
BY DEPUTY

DOCKETED ON CM
NOV 10 2004
BY 048

Priority ✓
Send ✓
Enter
Closed
JS-5/JS-6
JS-2/JS-3
Scan Only

UNITED STATES DISTRICT COURT

CENTRAL DISTRICT OF CALIFORNIA

WESTERN DIVISION

ALCATEL INTERNETWORKING, INC.,

Plaintiff,

v.

RATES TECHNOLOGY INC., et al.,

Defendants.

No. CV 03-9449-ER (PLAx)

ORDER GRANTING IN PART PLAINTIFF'S MOTION TO COMPEL RESPONSES TO DISCOVERY REQUESTS

In this action, plaintiff, Alcatel Internetworking, Inc. ("plaintiff") has sued defendants for declaratory relief concerning two patents whose rights are owned by defendants. Defendants filed a motion to dismiss for lack of personal jurisdiction. The District Court reserved its ruling on the motion and permitted discovery limited to the issue of the Court's personal jurisdiction over defendants. Plaintiff then served interrogatories and requests for production of documents on defendants. Defendants' responses to that discovery, or their alleged lack of responses thereto, forms the basis of this Motion.

The Court has considered the documents filed in connection with the Motion, and has concluded that oral argument will not be of material assistance in determining plaintiff's Motion. Accordingly, the hearing scheduled for November 16, 2004, is **ordered off calendar** (see Local Rule 7-15).

61

Defendants have objected to providing the sought-after discovery for a number of reasons. First, they indicate that the discovery was directed not to Rates Technology Inc. ("RTI"), but instead to the named defendants "Rates Technology, Inc., a New York Corporation," and "Rates Technology New York, Inc., also a New York Corporation." Joint Stipulation at 4. The patents at issue, however, are not owned by either of these named defendants, but are instead owned by Rates Technology Inc., a Delaware corporation. As such, defendants contend that further responses are not required. The Court rejects defendants' argument. RTI has already served initial responses to the discovery requests; its actions indicate its involvement as a defendant in this action. Should RTI file a motion to dismiss the claims against it on the grounds it has not been named as a defendant, and if the District Court determines that the wrong defendant has been named in this action, RTI may be relieved of its discovery obligations at that time. No such ruling has occurred to date. In the meantime, plaintiff, on October, 20, 2004, filed a Notice of Dismissal of the action as to Rates Technology New York, Inc., and has filed a Notice of Errata changing the complaint's allegation that Rates Technology Inc. is a New York Corporation to it being incorporated under the laws of Delaware.

Defendants further assert that plaintiff's description in its discovery requests of RTI's agreements with California companies as "licenses" is incorrect, as the agreements are actually covenants not to sue amounting to settlement agreements between RTI and other allegedly infringing companies. Defendants contend that it would be "improper" under Federal Rule of Evidence 408 for it to produce information about its settlement agreements with other parties and other lawsuits. That rule prohibits use of settlement agreements to prove liability for or invalidity of a claim. It does not preclude use of this evidence when "offered for another purpose." Here, the purpose for which it would be offered is to show RTI's contacts with California, not liability for a claim. Even if such agreements could properly be precluded from being introduced at trial, that is not the issue in this discovery motion. That RTI has entered into multiple licenses, or covenants not to sue, or settlement agreements, with California companies may be determinative on the issue of contacts. While defendants recite their mantra that plaintiff's receipt of "warning letters from and negotiations . . . with [defendants] cannot, without more, support personal jurisdiction

in an action for a declaratory judgment of patent invalidity and noninfringement" (Inamed Corporation v. Kuzmak, 249 F.3d 1356, 1361 (Fed. Cir. 2001)), the discovery sought here may lead to the "more" information without which plaintiffs may not be able to establish whether the Court has personal jurisdiction over defendants.

Next, defendants assert that plaintiff did not complete the Local Rule 37 meet and confer requirements, and that the Joint Stipulation was sent to defendants before defense counsel could give his proposals on how to resolve the discovery dispute. While the Court expects compliance by the parties with the Local Rules, it notes that defendants have not detailed their proposals in the Joint Stipulation or any subsequent filing. Accordingly, the Court will consider and rule on the Motion.

Finally, the Court notes that the District Court's order granting time for discovery did not limit that discovery to an exploration of defendants' contacts with California relating to the two patents at issue herein. Rather, in the Motion to Dismiss, the question will be whether defendants have "certain minimum contacts with [California] such that the maintenance of the suit does not offend traditional notions of fair play and substantial justice." International Shoe Co. v. State of Washington, 326 U.S. 310, 316, 66 S.Ct. 154, 90 L.Ed. 95 (1945). Plaintiff may be able to establish personal jurisdiction over defendants if it can show either: 1. that defendants have contacts with California that are "substantial . . . continuous and systematic," in which case personal jurisdiction may exist over defendants for a cause of action unrelated to those contacts (Perkins v. Benguet Consolidated Mining Co., 342 U.S. 437, 446-47, 72 S.Ct. 413, 96 L.Ed. 485 (1952)); or 2. if defendants' contacts with California are not substantial, those contacts may still subject defendants to specific jurisdiction for claims arising from or related to its activities within the state. Burger King Corp. v. Rudzewicz, 471 U.S. 462, 472, 486, 105 S.Ct. 2174, 85 L.Ed.2d 528 (1985); see Doe v. American National Red Cross, 112 F.3d 1048, 1051 (9th Cir. 1997) (specific jurisdiction requires, in part, that claim arose out of or is the result of defendants' forum-related activities); see also Red Wing Shoe Co. v. Hockersen-Halberstadt, Inc., 148 F.3d 1355, 1359 (Fed. Cir. 1998) (distinguishing between general and specific jurisdiction). Based on the

discovery requested by plaintiff, defendants' responses will not be limited to the two patents at issue herein.[1] With this context in mind, the Court rules as follows:

SCANNED

Interrogatory No. 1: **Granted in part**. Defendants have already provided the names of the entities that may or actually do business in California with which it has entered into settlement agreements entitled "covenants not to sue" relating to the patents at issue herein or other patents. Defendants shall provide the telephone numbers and addresses for each of these entities.

Request for Production No. 1: **Granted in part**, but limited to documents concerning communications between defendants and any licensee (as defined in plaintiff's discovery requests) of the patents that may be or is actually doing business in California (the "California companies"), and limited to the time frame of January 1, 2001, to the present.

Request for Production No. 4: **Granted in part**, but limited to those portions of personal calendars, diaries and planners that defendants' officers or employees have used at any time since January 1, 2001, that reflect conference calls and/or meetings with the California companies, and/or trips to California.

Request for Production No. 5: **Granted in part**, but limited to telephone and cell phone records since January 1, 2001, that reflect calls to California.

Request for Production No. 7: **Granted in part**, but limited to those documents concerning litigation involving the subject patents with the California companies.

---

[1] Defendants assert in their Supplemental Memorandum in Opposition to Plaintiff's Motion that defendant Weinberger's appeal of the denial of his anti-SLAPP motion stays this action as a matter of law. Supplemental Memorandum at 2, citing Elsea v. Saberi, 4 Cal.App.4th 625, 629 (Cal.App. 1 Dist. 1992). As a discovery order of this nature will not render defendant Weinberger's appeal "futile," and will not "affect" the appealed judgment, this Court is not prevented from proceeding. Elsea, 4 Cal.App.4th at 629. This is especially true since the motion being appealed was brought by defendant Weinberger, and this discovery order is directed to defendant RTI.

Request for Production No. 8: **Granted in part**, but limited to those portions of transcripts that reflect contacts that defendants' officers or employees have had with any of the California companies.

Request for Production No. 12: **Granted in part**, but limited to advertisement, promotional and/or marketing materials that were created or used since January 1, 2001, and that either reflect business conducted by defendants in California, or were contained in any publications that were distributed in California.

Request for Production No. 13: **Granted in part**, but limited to responsive documents from January 1, 2001, to the present, and limited to the California companies. Defendants may redact the amount of any payments made or received.

Request for Production No. 14: **Denied**. To the extent defendants contend that they have already produced all documents in their possession responsive to this request, unless plaintiff convinces the Court that this assertion is not made in good faith and/or that defendants did not make a reasonably diligent effort to locate responsive documents, defendants' assertion will be accepted by the Court, and defendants will be considered to have satisfied this request.

Requests for Production Nos. 16-28: **Granted**. Defendants may redact any confidential portions of the "covenants not to sue" -- e.g., the amount of payments made by the third party to defendants, and any terms of these agreements that do not reflect defendants' further business involvement with those third parties -- before producing these documents. To the extent defendants contend that plaintiff is already in possession of covenants not to sue from certain of the California companies, this does not relieve defendants of their obligation to produce responsive documents that are in their possession.

/

/

CONCLUSION

Based on the foregoing, it is **ordered** that plaintiff's Motion to Compel is **granted in part**, as set forth above. No later than 10 business days from the filing date of this Order, defendants shall produce the ordered documents and responses.

DATED: November 10, 2004

PAUL L. ABRAMS
UNITED STATES MAGISTRATE JUDGE

I HEREBY CERTIFY THAT THIS DOCUMENT WAS SERVED BY FAX DELIVERY ON PLAINTIFF/DEFENDANT (OR PARTIES) AT THEIR RESPECTIVE MOST RECENT FAX NUMBER OF RECORD IN THIS ACTION ON THIS DATE.

DATE: 12/6/04

DEPUTY CLERK

FILED
CLERK, U.S. DISTRICT COURT
DEC - 6 2004
CENTRAL DISTRICT OF CALIFORNIA
BY DEPUTY

Priority
Send
Enter
Closed
JS-5/JS-6
JS-2/JS-3
Scan Only

DOCKETED ON CM
DEC - 7 2004
BY 051

UNITED STATES DISTRICT COURT

CENTRAL DISTRICT OF CALIFORNIA

WESTERN DIVISION

ALCATEL INTERNETWORKING, INC.,

Plaintiff,

v.

RATES TECHNOLOGY INC., et al.,

Defendants.

No. CV 03-9449-ER (PLAx)

ORDER GRANTING PLAINTIFF'S EX PARTE APPLICATION FOR AN ORDER COMPELLING COMPLIANCE WITH PREVIOUS COURT ORDER

In this action, plaintiff, Alcatel Internetworking, Inc. ("plaintiff") has sued defendants for declaratory relief concerning two patents whose rights are owned by defendants. Defendants filed a motion to dismiss for lack of personal jurisdiction. The District Court reserved its ruling on the motion and permitted discovery limited to the issue of the Court's personal jurisdiction over defendants. Plaintiff then served interrogatories and requests for production of documents on defendants. Based on what it perceived to be insufficient responses by defendants to that discovery, plaintiff moved to compel additional responses. On November 10, 2004, the Court granted in part plaintiff's motion to compel further responses. In particular, the Court granted plaintiff's requests that defendants produce various "covenants not to sue" entered into between defendants and third parties, but allowed defendants to redact any confidential portions of those documents, such as the amounts of payments made by the third parties to defendants under the

82

terms of the covenants, and any terms of those agreements that do not reflect defendants' further business involvement with those third parties.

On December 1, 2004, plaintiff filed an ex parte application for an order compelling compliance with the Court's November 10, 2004, Order, and for sanctions (the "Application"). In the Application, plaintiff contends that defendants have produced none of the covenants, as defendants assert that there are no further responsive documents once the confidential information is redacted, i.e., defendants consider every portion of the covenants to be confidential. See Declaration of Brian K. Brookey in Support of Ex Parte Application ("Brookey Dec."), ¶¶ 3-4; Exs. 3-4. Defendants, in their Opposition to the Application, expressly state that after the payment terms and terms that do not reflect defendants' further business involvement with those third parties were redacted, "there was nothing left to produce." Opposition, at p. 3; Declaration of James B. Hicks, ¶ 4. Defendants further explain that they interpreted the Order to allow them to similarly redact the responses to Request No. 1.

The Court has considered the documents filed in connection with the Application, and finds that defendants' refusal to produce the documents ordered in connection with plaintiff's Requests for Production Nos. 1 and 16-28 is not consistent with the intent of the Court's November 10, 2004, Order. Although the examples provided of terms that may be redacted from the covenants not to sue may have been inartfully worded by the Court, the purpose of the Order was to allow plaintiff to "show RTI's contacts with California," and the covenants not to sue "may be determinative on the issue of contacts." Order, p. 2. The complete redacting by defendants is thwarting plaintiff's ability to fully explore the issue of defendants' contacts with California and thus the Court's personal jurisdiction over defendants. The Court has reviewed various covenants not to sue submitted in connection with plaintiff's previous Motion to Compel (Declaration of Brian K. Brookey in Support of Motion to Compel Responses, Exs. 4-7), and finds that while a technical reading of the Order may have led defendants to believe that there are no terms in the covenants reflecting further business involvement between defendants and the third parties, there is in fact information contained in the covenants that the Court did not intend to be redacted, i.e., the vast majority of the sections, excluding the "Payment" section. Additionally, despite the Court's

instruction that defendants are **not** relieved of their obligation to produce responsive documents based on their contention that plaintiff is already in possession of those documents, defendants may have relied on such possession to refuse production. See RTI's Supplemental Responses, at p. 18 (Ex. 3 to Brookey Dec.). But see Declaration of James B. Hicks, at ¶ 5. Accordingly, and based on the Court's inherent power to vacate and reconsider its own orders (see Motorola, Inc. v. J.B. Rodgers Mechanical Contractors, Inc., 215 F.R.D. 581, 582 (D. Az. 2003)), the Court hereby **orders** defendants to respond to plaintiff's Requests for Production Nos. 1 and 16-28, redacting **only** the amount of payments made or to be made by the third parties to defendants. Such production may be made pursuant to the Stipulated Protective Order entered by the Court on November 5, 2004.

The Court finds that defendants' response to the November 10, 2004, Order, which precipitated the filing of the Application, was not a willful violation of that Order and thus, under the circumstances, declines to award sanctions against defendants or their counsel at this time.

CONCLUSION

Based on the foregoing, it is **ordered** that plaintiff's Application is **granted** as set forth above. No later than December 9, 2004, defendants shall produce the ordered documents to plaintiff, at the offices of plaintiff's counsel.[1]

DATED: December 6, 2004

PAUL L. ABRAMS
UNITED STATES MAGISTRATE JUDGE

[1] In defendants' Supplemental Opposition to the Application, defendants indicate that default was recently entered against plaintiff and its corporate parent in defendant RTI's patent infringement action in New York, that default judgment in that action would be binding upon and res judicata as to plaintiff in this action, and that defendants intend to ask the District Court to stay this action on December 6, 2004. Should the District Court stay this action, then this Order would of course be stayed as well.

FILED
CLERK, U.S. DISTRICT COURT
DEC 17 2004
CENTRAL DISTRICT OF CALIFORNIA
BY DEPUTY

___ Priority
_✓_ Send
___ Clsd
___ Enter
___ JS-5/JS-6
___ JS-2/JS-3

UNITED STATES DISTRICT COURT

CENTRAL DISTRICT OF CALIFORNIA

ALCATEL INTERNETWORKING INC.,

Plaintiff,

v.

RATES TECHNOLOGY, INC., et al.,

Defendants.

Case No. CV 03-9449 ER

ORDER

Once again, Rates Technology Inc. (RTI) has filed objections pursuant to Federal Rule of Civil Procedure 76(a) to a Magistrate Judge's order. This time RTI objects to an order, dated December 6, 2004, compelling compliance with a previous court order, to which the Court previously overruled objections. Once again, finding the December 6, 2004 order to be neither clearly erroneous nor contrary to law, the Court declines to modify or set aside the order. The objections are overruled and the order remains in full effect.

//

//

//

DOCKETED ON CM
DEC 20 2004
BY 006

93

IT IS SO ORDERED.

IT IS FURTHER ORDERED that the Clerk of the Court shall serve, by United States mail or by telefax or by email, copies of this Order on counsel in this matter.

SIGNED

Dated: 12/17/04

EDWARD RAFEEDIE
Senior United States District Judge

FILED
CLERK, U.S. DISTRICT COURT
MAR - 8 2006
CENTRAL DISTRICT OF CALIFORNIA
BY DEPUTY

Priority ✓
Send ✓
Enter ___
Closed ___
JS-5/JS-6 ___
JS-2/JS-3 ___
Scan Only ___

UNITED STATES DISTRICT COURT

CENTRAL DISTRICT OF CALIFORNIA

WESTERN DIVISION

ALCATEL INTERNETWORKING, INC.,

Plaintiff,

v.

RATES TECHNOLOGY INC., et al.,

Defendants.

and consolidated action.

No. CV 03-9449-ER (PLAx) ✓
No. CV 05-6459-ER (PLAx)
(Consolidated actions)

ORDER RE PLAINTIFF'S MOTION TO COMPEL RTI TO RESPOND TO INTERROGATORIES AND REQUESTS FOR PRODUCTION

In this consolidated action, plaintiff Alcatel Internetworking, Inc. ("All") sued defendants Rates Technology Inc. ("RTI") and Gerald Weinberger (collectively the "defendants") for a declaration of non-infringement and invalidity of patents, and defendants sued All, Alcatel USA, Inc. (collectively the "Alcatel parties") and Alcatel, S.A.[1] for patent infringement. In this motion, All moves to compel supplemental responses to its interrogatories and requests for production of documents from RTI. The Court has concluded that oral argument will not be of material assistance in determining All's Motion. Accordingly, the hearing scheduled for March 14, 2006, is **ordered off calendar** (see Local Rule 7-15).

[1] Alcatel, S.A. has since been dismissed for lack of jurisdiction.

DOCKETED ON CM
MAR - 8 2006
BY 048
276

For its part, RTI asserts that this motion is premature as it "has already agreed to exchange supplemental discovery responses with All" (Joint Stipulation, p. 5), and it had sought a mutual exchange date based on a purported agreement to conduct such an exchange. RTI also asserts that it "has been willing and able to provide supplemental responses" to All that are not privileged[2] or relate to settlement, and will do so "as soon as this Court sets a date for exchange." Joint Stipulation, pp. 6, 7.

RTI acknowledges that All has now provided supplemental responses to its discovery requests, but contends that those responses "are defective as a matter of law." Supplemental Memorandum in Opposition, p. 2. In particular, RTI complains that the several boxes of documents produced by All were not produced as they are kept in the usual course of business, and are not organized to correspond to the individual requests, all in violation of Fed.R.Civ.P. 34(b). It further asserts that All's supplemental interrogatory responses are defective, as All has not identified the responsive documents that it has produced.[3]

Whether or not All's discovery responses are adequate is not the subject of a motion currently before this Court.[4] Nowhere does RTI indicate that it has provided the supplemental responses as sought by All in this motion, only that it is able to provide the responses but wanted to produce them simultaneously with All's responses. However, RTI's request to enforce an agreement for simultaneous production was denied by the Court on February 27, 2006. The Court is thus left to decide All's motion.

---

[2] All indicates that it is not seeking privileged and work product information and documents. Declaration of Brian K. Brookey in Support of Motion, ¶ 3.

[3] All has represented that it is preparing an index to indicate to which requests for production the documents are responsive, and is providing the documents to RTI on CD as well. Supplemental Declaration of Brian K. Brookey, ¶ 3.

[4] The Court admonishes the parties that prior to bringing such a motion, the parties must work together in a good faith effort to resolve any differences they may have in this regard, and must fully comply with all requirements for filing discovery motions previously ordered by the Court.

Examining RTI's objections to the requested discovery, it objects to each of the interrogatories and requests for production by raising its "general objections,"[5] an objection that the interrogatories and requests are "vague and ambiguous," that the patents speak for themselves, and by referring to its initial disclosure statement. RTI then indicates that it "reserve[s] the right to offer additional evidence at trial and/or to amend or supplement their response" to the discovery requests. RTI further objects to some of the interrogatories and requests as being overbroad, irrelevant, and as violating the attorney-client privilege and work product doctrine.[6] It goes on to contend that the purported discovery agreement for simultaneous production should be enforced, and "[a]t that point" RTI would provide "verified, substantive supplemental response[s]" to the requests and interrogatories.

RTI's objections to certain of All's interrogatories and requests for documents on the grounds that the discovery requests are vague, ambiguous, or irrelevant are overruled. The Court finds nothing vague or ambiguous about the wording or content of the interrogatories or requests. Further, with limited exceptions noted below, the discovery requests appear to be relevant to the claim or defense of a party. Under Fed.R.Civ.P. 26(b)(1), discovery is permitted of "any matter, not privileged, that is relevant to the claim or defense of any party." As a general matter, Federal Rule of Civil Procedure 26(b) is to be "liberally interpreted to permit wide-ranging discovery of information," even if that information is not ultimately admitted at trial. See Comcast of Los Angeles, Inc. v. Top End International, Inc., 2003 WL 22251149, at *2 (C.D. Cal. July 2, 2003); see also Fed.R.Civ.P. 26(b)(1) ("[r]elevant information need not be admissible at trial if the discovery appears reasonably calculated to lead to the discovery of admissible evidence."). The burden is on RTI to show that discovery should not be allowed (Comcast, at *2, citing Blankenship v. Hearst Corp., 519 F.2d 418, 429 (9th Cir. 1975)); it is not up to RTI to decide what All needs

---

[5] While RTI complains that the Joint Stipulation is defective as All did not include the language of RTI's general objections, the Court finds in the circumstances presented here that this defect is not material to a resolution of this discovery dispute. RTI has provided no explanation or substantiation for any particular general objection.

[6] As All indicates that it is not seeking information subject to attorney-client and work product protection, the Court will not address RTI's objections in this regard.

to proceed in this action. Here, RTI objects to various discovery requests as seeking irrelevant information, including information about settlements or settlement offers, and amounts paid for licenses under the subject patents. The Court agrees with All that information concerning license payments and settlements is relevant to the issue of determining a reasonable royalty (see Georgia-Pacific Corp. v. U.S. Plywood, Corp., 318 F.Supp. 1116, 1120 (S.D.N.Y. 1970)). As for information concerning RTI's settlements in other cases, the Court will limit production to responsive information that is not subject to confidential settlement agreements. As to such confidential settlement information, RTI shall provide the name of the case, the case number, and the location of the action in which the confidential settlement occurred. Whether or not information concerning licenses and settlements is ultimately admitted at trial is not for this Court to determine at the discovery stage.

The Court also overrules RTI's objections that the interrogatories and requests are overbroad, as those objections lack substantiation or explanation.[7] It is well-established that the burden is on the objecting party to show grounds for failing to provide the requested discovery. See, e.g., Smith v. B & O Railroad Co., 473 F.Supp. 572, 585 (D. Md. 1979); Sherman Park Community Association v. Wauwatosa Realty, 486 F.Supp. 838, 845 (E.D. Wis. 1980); Laufman v. Oakley Building and Loan Co., 72 F.R.D. 116, 121 (S.D. Ohio 1976). RTI cannot simply invoke generalized objections; rather, with respect to All's discovery requests, RTI

> must show specifically how, despite the broad and liberal construction afforded the federal discovery rules, each [request] is not relevant or how each [request] is overly broad, burdensome or oppressive by submitting affidavits or offering evidence revealing the nature of the burden.

Roesberg v. Johns-Manville Corp., 85 F.R.D. 292, 296 (E.D. Pa. 1980) (citations omitted); Wirtz v. Capitol Air Service, Inc., 42 F.R.D. 641, 643 (D. Kan. 1967). RTI's objections to the requests being overbroad are insufficient. Kansas-Nebraska Natural Gas v. Marathon Oil Co., 109 F.R.D. 12, 24 (D. Neb. 1985) (party objecting to production requests must specify why the requests are

---

[7] However, as to Request No. 21, the Court limits production to all documents concerning litigation against RTI during the preceding ten years **that related to any of the patents at issue in this consolidated action.**

objectionable); Roesberg, 85 F.R.D. at 296-97. Finally, RTI's references to its initial disclosure as a substitute for responding to the interrogatories and requests are wholly inadequate, and its assertion that the patents speak for themselves is not at all responsive to many of the requests in which this is asserted as a basis to refuse discovery. The Court overrules RTI's objections in these areas.

The primary basis for RTI's refusal to provide discovery responses to date is its belief that it would be more cost-effective, and perhaps fairer, to require the simultaneous exchange of discovery. As mentioned above, however, RTI's motion in this regard has been denied. It must now provide AII with "verified, substantive supplemental response[s]" to the discovery requests.

CONCLUSION

Accordingly, based on the foregoing, it is **ordered** that AII's Motion to Compel is **granted**, as set forth above. No later than 10 business days from the filing date of this Order, RTI shall produce the ordered supplemental responses to AII's interrogatories and requests for production and all responsive documents, excluding those legitimately protected by the attorney-client privilege or the work product doctrine.[8]

DATED: March 7, 2006

PAUL L. ABRAMS
UNITED STATES MAGISTRATE JUDGE

[8] As for these documents, RTI must produce a privilege log pursuant to Fed.R.Civ.P. 26(b)(5).

FILED
CLERK, U.S. DISTRICT COURT
APR 21 2006
CENTRAL DISTRICT OF CALIFORNIA
BY DEPUTY
SCANNED

DOCKETED ON CM
APR 24 2006
BY 048

Priority
Send
Enter
Closed
JS-5/JS-6
JS-2/JS-3
Scan Only

UNITED STATES DISTRICT COURT

CENTRAL DISTRICT OF CALIFORNIA

WESTERN DIVISION

ALCATEL INTERNETWORKING, INC.,

Plaintiff,

v.

RATES TECHNOLOGY INC., et al.,

Defendants.

and consolidated action.

No. CV 03-9449-ER (PLAx)
No. CV 05-6459-ER (PLAx)
(Consolidated Actions)

ORDER RE: RTI'S MOTION FOR PROTECTIVE ORDER, AND PLAINTIFF'S CROSS-MOTION TO COMPEL

On March 8, 2006, the Court granted the motion of plaintiff Alcatel Internetworking, Inc. ("All") to compel supplemental responses to its interrogatories and requests for production of documents from defendant Rates Technology Inc. ("RTI"). RTI was ordered to produce supplemental responses to interrogatories and requests for production, and all responsive documents, no later than ten business days from the filing date of the Order, i.e., no later than March 22, 2006. For any documents that RTI contended were legitimately protected by the attorney-client privilege or work-product doctrine, it was ordered to produce a privilege log pursuant to Fed.R.Civ.P. 26(b)(5). On March 22, 2006, RTI served supplemental responses to interrogatories and requests for production of documents. See Declaration of Brian K. Brookey in Opposition to Motion for Protective Order ("Brookey Dec."), at Exhibits 2-3. No documents were

302

SCANNED

produced by RTI in response to the Court's Order.[1] Brookey Dec., ¶ 4. It does not appear that a privilege log was served.

On March 16, 2006, RTI filed its Notice of Withdrawal; on March 27, 2006, it filed a Motion to Dismiss, pursuant to which RTI seeks to "dismiss this entire lawsuit." (Hicks Dec., ¶ 3). In light of this development, RTI argues that the District Court lacks discretion to not dismiss this action, and that the Court must grant RTI's Motion to Dismiss the patent infringement complaint, which RTI contends would render all of plaintiff's claims moot. On April 18, 2006, RTI filed its Motion for Protective Order Re Discovery, in which it seeks an order from the Court that all discovery and discovery motions or applications in this case be stayed until RTI's Motion to Dismiss is decided by the District Court, and for an additional two weeks thereafter to allow RTI to provide further supplemental responses to plaintiff's interrogatories and document requests should the case not be completely dismissed at that time. Plaintiff filed a Cross-Motion to compel RTI's compliance with the Court's March 8, 2006, Order, and for monetary and other sanctions.

Defendant's Motion for Protective Order is **denied** without prejudice. This Court does not have the authority to stay or in any way modify the District Court's discovery schedule. Such a request must be made to the District Court.[2] However, as RTI has conceded the existence of supplemental responses to plaintiff's discovery requests that it has not produced, but which it

---

[1] Although RTI asserts that Robert Epstein produced documents "on RTI's behalf in response to the Court's March 8, Order directing RTI to produce documents" (Declaration of James B. Hicks in Support of RTI's Motion for Protective Order ("Hicks Dec."), ¶ 5), the supporting documentation (Hicks Dec., Ex. D), does not support RTI's contention that any documents produced by Mr. Epstein in response to a subpoena were in fact meant to comply with the Court's Order. Indeed, Mr. Epstein's March 8, 2006, letter to counsel for plaintiff, in which he objects to producing documents in response to the subpoena, makes absolutely no reference to RTI's obligation to produce under the Court's Order.

[2] This is especially true where, as here, pursuant to the District Court's Order Granting Modification of Scheduling Order, all discovery, including discovery motions, shall be completed by May 19, 2006, and discovery motions must be filed and heard prior to that date. With a May 9, 2006, hearing date for RTI's Motion to Dismiss, and its request for two weeks following the District Court's order to provide supplemental responses, the relief sought by RTI would significantly impact -- and could in fact violate -- the District Court's discovery schedule.

would produce upon the District Court's determination concerning its Motion to Dismiss,[3] the Court **orders** that all supplemental responses be produced, consistent with this Court's March 8, 2006, Order, **no later than April 28, 2006**. RTI shall pay plaintiff the sum of $500 for each calendar day after April 28, 2006, that full and complete responses to the Court's March 8, 2006, Order have not been produced.

Plaintiff's Cross-Motion is **denied** without prejudice, as it has not presented its specific contentions in the proper format, and the Joint Stipulation submitted in connection with the Protective Order does not suffice in that regard.

DATED: April 21, 2006

PAUL L. ABRAMS
UNITED STATES MAGISTRATE JUDGE

[3] RTI concedes that supplemental responses exist to the discovery it has provided, and has agreed to supplement those response "if the case does remain alive" (Transcript of April 3, 2006, Meet-and-Confer, p. 6, lines 18-19 (Hicks Dec., Ex. O); see also id. at p. 26, lines 17-19; p. 28, lines 17-19; p. 28, line 24 to p. 29, line 1 ("I will provide more information if in fact Judge Rafeedie does not dismiss the case.").

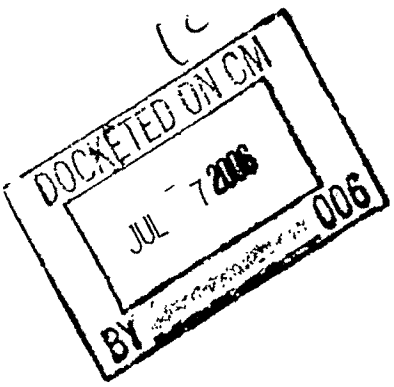

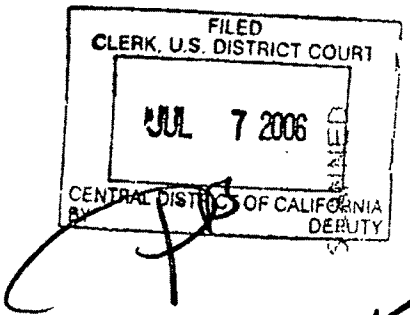

Priority ✓
Send ✓
Enter ____
Closed ____
JS-5/JS-6 ____
JS-2/JS-3 ____
Scan Only ____

UNITED STATES DISTRICT COURT

CENTRAL DISTRICT OF CALIFORNIA

ALCATEL INTERNETWORKING, INC., Plaintiff, v. RATES TECHNOLOGY INC., et al., Defendants.	Case No. CV 03-9449 ER CV 05-6459 ER ORDER DENYING MOTION FOR RELIEF FROM AND TO VACATE AND/OR RECONSIDER JURISDICTIONAL ORDER
AND CONSOLIDATED ACTION	

Rates Technology Inc. ("RTI") and Gerald Weinberger (the "Movants") again have moved the Court for relief from and to vacate and/or to reconsider the Court's February 1, 2005, order (the "Order"), which held that Movants were subject to personal jurisdiction in California. The Court concludes that this matter is appropriate for disposition without oral argument of counsel. See Local Rule 7-15.

The movants make three arguments in support of their requested relief, although their third argument is really an extension of the first. As the Court

318

already has observed, Movants' arguments are "heavy on irrelevant or improperly applied law . . . and light on relevant law properly applied to the applicable facts." The Court again DENIES the motion.

SCANNED

Movants argue that "it has long been a common judicial practice to vacate prior orders in a case upon a party's request after a settlement has been entered, since the parties' 'settlement moots the controversy.'" Motion to Vacate and/or Reconsider Jurisdictional Orders ("Motion to Vacate") p.4. In support of their contention that such an action has "long been a common judicial practice" and is procedurally and substantively correct, Movants cite one case from the Second Circuit, Nestle Co. v. Chester's Market, Inc., 756 F.2d 280, 283 (2d Cir. 1985). A single 1985 case from a sister circuit hardly justifies Movants' claim of a lengthy and common judicial practice. Furthermore, aside from Nestle Co. not being the law of the Ninth Circuit on the issue of vacatur, as discussed in the next paragraph, the Second Circuit expressly has recognized that the holding of Nestle Co. was overruled by the Supreme Court's decision in Bancorp Mortgage Co. v. Bonner Mall Partnership, 513 U.S. 18, 27 (1994), making the proposition for which Movants cite the case no longer good law. See Microsoft Corp. v. Bristol Technology, Inc., 250 F.3d 152, 154-55 (2d Cir. 2001) (formulating a new standard for vacatur, describing it as an "'extraordinary remedy' to be granted only in 'exceptional circumstances'"); see also In re Tamoxifen Antitrust Litigation, 429 F.3d 370, 386-87 (2d Cir. 2005) (stating that Nestle Co. was overruled by Bancorp Mortgage Co.).

The law in the Ninth Circuit regarding vacatur differs from that of the Second Circuit, which fact Movants ignore in their motion. The Ninth Circuit balances the competing values of finality of judgment against the right to relitigation of unreviewed disputes. See Nat'l Union Fire Ins. Co. v. Seafirst Corp., 891 F.2d 762, 765-66 (9th Cir. 1989) (holding that the district court did not abuse its discretion in denying the motion to vacate because of "third-party

SCANNED

interests and the possible, although uncertain status of any preclusive effect" of the order).

After balancing the equitable considerations at issue in this motion, it is clear that vacatur is inappropriate.

First, the Court considered all the arguments set forth in the movants' motions to vacate in deciding the original jurisdictional motion. After a careful review of these arguments, the Court sees no reason, either legal or factual, to question its earlier ruling.

Second, as Movants recognize, the precedential value of the Order is insignificant because it is unpublished. The finding of personal jurisdiction in the Order was based on an analysis of the requirements of specific personal jurisdiction, and thus related to whether the claims at issue in this case arose out of or were related to the movant's forum-related activities. Future plaintiffs suing Movants will find little precedential value in the Order due to its limited applicability to other disputes. Only where Movants are being sued over the patents at issue in this dispute will the Order be instructive, which fact, the Court believes, weighs in favor of keeping the Order on the record.

Third, aside from arguing that the Order was incorrect, Movants fail to raise any other equitable concerns with the Order that would warrant vacatur. The facts of this case are quite unlike the facts of Nestle Co. In that case, the plaintiff sought to vacate a judgment that found one of its trademarks invalid. Nestle Co., 756 F.2d at 281-82. Due to a settlement of the dispute that occurred after the invalidity ruling, the plaintiff did not have the opportunity to seek appellate review of the finding of invalidity and consequently could have been estopped from enforcing its trademark. Id. Under the more relaxed standard of Nestle Co., the court found that potential for estoppel weighed in favor of vacatur of the invalidity ruling. Id.

And finally, the Court finds no reason to rewrite history when no law or

facts require such a result. See In the Matter of Memorial Hospital of Iowa County, Inc., 862 F.2d 1299, 1300 (7th Cir. 1988) (recognizing that in the Seventh Circuit, motions to vacate an order of the district court are always denied because "an opinion is a public act of the government, which may not be expunged by a private agreement" and "[h]istory cannot be rewritten"). At the time the Order was filed, personal jurisdiction over Movants existed in this district.

Movants also argue that Mr. Weinberger's due process rights were violated by the Order because Alcatel Internetworking, Inc. ("Alcatel") "never submitted any evidence . . . that Mr. Weinberger was in fact RTI's alter ego." Motion to Vacate p. 6. This argument misses the importance of the posture of the original motion and order thereon. In a motion to dismiss, the Court must resolve any contested factual issues in favor of the non-moving party. See Electronics for Imaging v. Coyle, 340 F.3d 1344, 1349 (Fed. Cir. 2003). In its complaint, Alcatel alleged that Mr. Weinberger was the alter ego of RTI. The Court accepted as true this allegation for the purposes of the motion to dismiss for lack of personal jurisdiction. Although the Court recognized that Alcatel's allegations ultimately may be incorrect, the settlement of this case precluded a resolution of this factual dispute. Therefore, Movants' argument that "Alcatel never submitted any meaningful evidence to the Court to support" its allegation that Mr. Weinberger is the alter ego of RTI is disingenuous at best. No further evidence ever was required. Thus, the requirements of Local Rule 7-18(1), (2), and (3) are not met.

Movants' final argument, that there is no jurisdiction over Alcatel's declaratory relief claims against RTI due to the settlement and RTI's promise never to sue the Alcatel parties with regards to the patents at issue, is likewise meritless. This argument again misses the importance of the posture of the original motion and order thereon. When the Court decided the original motion, jurisdiction was proper and adequately supported by the facts and the law. The Order was based on the facts and allegations as they existed at that time. The

parties' settlement of the dispute fails to justify reconsideration of the Order where the original basis of personal jurisdiction continues to exist, namely Movants' contacts with the forum. The settlement may resolve the dispute between the parties but it cannot change history nor can it erase the parties' jurisdictional contacts. No new material facts have come to light that would warrant reconsideration of the Order. See Local Rule 7-18(2).

The motion is DENIED. Movants already have wasted enough of the Court's time with their frivolous motions and may not file any other motions for reconsideration of this issue without leave of Court. Movants' counsel is hereby warned that failure to follow this directive may result in the imposition of sanctions.

IT IS SO ORDERED.

IT IS FURTHER ORDERED that the Clerk of the Court shall serve, by United States mail or by telefax or by email, copies of this Order on counsel in this matter.

Dated: JUL -7 2006

EDWARD RAFEEDIE
Senior United States District Judge

SEALED

FILED
CLERK, U.S. DISTRICT COURT
JUL 13 2006
CENTRAL DISTRICT OF CALIFORNIA
BY DEPUTY
SCANNED

THOMAS J. DALY, CA Bar No. 119684
thomas.daly@cph.com
BRIAN K. BROOKEY, CA Bar No. 149522
brian.brookey@cph.com
CHRISTIE, PARKER & HALE, LLP
350 West Colorado Boulevard, Suite 500
Post Office Box 7068
Pasadena, California 91109-7068
Telephone: (626) 795-9900
Facsimile: (626) 577-8800

Attorneys for ALCATEL INTERNETWORKING, INC.

Priority
Send ✓
Enter
Closed
JS-5 JS-6 ✓
JS-[illegible]
Scan Only

LODGED
CENTRAL DIST. OF CALIF. LOS ANGELES
2006 JUL 12 PM 2:55

UNITED STATES DISTRICT COURT

CENTRAL DISTRICT OF CALIFORNIA

ALCATEL INTERNETWORKING, INC., a California corporation,

Plaintiff,

vs.

RATES TECHNOLOGY INC., a Delaware corporation, previously sued as RATES TECHNOLOGY, INC., a New York corporation; and GERALD J. WEINBERGER, an individual,

Defendants.

Case No. CV-03-9449 ER (PLAx)

STIPULATION FOR DISMISSAL OF COMPLAINT; ~~[PROPOSED]~~ ORDER PURSUANT TO STIPULATION

Having reached a settlement of their disputes, and pursuant to Federal Rule of Civil Procedure 41(a)(1)(ii), Plaintiff ALCATEL INTERNETWORKING, INC. and Defendants RATES TECHNOLOGY INC. and GERALD J. WEINBERGER (collectively "Defendants"), by and through their attorneys of record, stipulate as follows:

//

//

DOCKETED ON CM
JUL 14 2006
BY 006

320

SCANNED

(1) That Plaintiff's Complaint be dismissed with prejudice; and

(2) That each party shall each bear its own attorneys' fees and costs.

DATED: July 7, 2006

Respectfully submitted,
CHRISTIE, PARKER & HALE, LLP

By _____
Brian K. Brookey
Attorneys for Plaintiff,
ALCATEL INTERNETWORKING, INC.

DATED: July 11, 2006

Respectfully submitted,
BURKE, WILLIAMS & SORENSEN LLP

By _____
James B. Hicks
Attorneys for Defendants
RATES TECHNOLOGY INC., and
GERALD J. WEINBERGER

IT IS SO ORDERED.

Dated: JUL 13 2006

_____
Judge Edward Rafeedie

CERTIFICATE OF SERVICE

I certify that on July 11, 2006, pursuant to Federal Rules of Civil Procedure, a true and correct copy of the foregoing document described as **STIPULATION FOR DISMISSAL OF COMPLAINT; [PROPOSED] ORDER PURSUANT TO STIPULATION** was served on the parties in this action by U.S. Mail addressed as follows:

James B. Hicks, Esq.
BURKE, WILLIAMS & SORENSEN LLP
444 South Flower Street, Suite 2400
Los Angeles, CA 90071

I declare that I am employed by a member of the bar of this Court, at whose direction this service was made.

Executed on July 11, 2006 at Pasadena, California.

Susan Lovelace

Susan Lovelace

Exhibit J

Civil Action No. 07-441 JJF

UNITED STATES DISTRICT COURT
EASTERN DISTRICT OF NEW YORK
----------X
RATES TECHNOLOGY, INC.,

Plaintiff(s),

ORDER
CV 05-3583 (DRH) (WDW)

-against-

CABLEVISION SYSTEMS CORPORATION,

Defendant(s).
----------X

WALL, Magistrate Judge:

Before the court is defendant Cablevision System Corporation's ("Cablevision") motion to compel responses to document demands and interrogatories. Docket Entry ("DE") #40. Specifically, Cablevision seeks any licenses, settlement agreements, covenants not to sue, and other agreements between plaintiff Rates Technology Inc. ("RTI") and various non-parties concerning one or both of the patents at issue in this case. RTI opposes the motion, primarily on the ground that such information would ultimately be inadmissible under Rule 408 of the Federal Rules of Evidence. For the reasons stated below, the motion is GRANTED.

RTI seeks relief from Cablevision's alleged infringement of two United States patents held by RTI, and alleges $2.85 billion in damages. In this motion, Cablevision seeks to compel production of various agreements between RTI and non-parties concerning use of the same patents. RTI opposes the production of the materials on the grounds that the information sought is inadmissible pursuant to FRE 408. It does not claim that the content of the agreements is in any way privileged.

The Federal Rules state that parties "may obtain discovery regarding any matter, not privileged, that is relevant to the claim or defense of any party." Fed. R. Civ. P. 26 (b) (1). To be

discoverable, the information sought "need not be admissible at the trial if the discovery appears reasonably calculated to lead to the discovery of admissible evidence." *Id.* This rule must be interpreted in line with the general purpose of discovery, which is to "provide both parties with information essential to proper litigation of all the facts." *Sackman v. Liggett Group, Inc.*, 173 F.R.D. 358, 361 (E.D.N.Y. 1997)(quoting *Mallinckrodt Chemical Works v. Goldman, Sachs & Co.*, 58 F.R.D. 348, 353 (S.D.N.Y. 1973)(citation omitted)).

The court finds that the materials sought are discoverable in that they may lead to the discovery of admissible evidence, and that RTI's reliance on FRE 408 is, at best, premature. During the course of this litigation, RTI has bolstered its claims that its patents are universally accepted by stating that "over 120 companies have been covered under" the patents, and that RTI has only had to litigate patent infringement claims "approximately 25 times out of some 740 covered companies." Hicks ltr. of 12/13/05 at 2, DE #21. Having raised this information to its benefit, RTI now seeks to bar inquiry into how or why those companies were "covered." Simply put, RTI cannot have it both ways.

The court takes no position on whether the information sought will be admissible at trial. FRE 408 states, in part, that evidence accepting "valuable consideration in compromising or attempting to compromise a claim which was disputed as to either validity or amount, is not admissible to prove liability for or invalidity of the claim or its amount." In its opposition papers, RTI repeatedly asserts that its agreements with non-parties are settlements and not licenses. Prior communications from RTI, however, characterize the agreements somewhat differently: "[o]ur past 'licensing' practice has been to grant Covenant Not To Sue ('CNS') agreements and not formal licenses, in exchange for one-time payments." Weinberger ltr., DE

#20-5. It is possible that the documents at issue wouldn't be considered settlement materials under FRE 408. *See, e.g., In re Mahurkar,* 831 F. Supp. 1354, 1378 (N.D. Ill. 1993) ("settlement of patent litigation may be functionally identical to a license"). Since discovery is ongoing and the question of admissibility is not currently before the court, it is premature to make a determination as to the nature of RTI's other "agreements."

Plaintiff shall, **by April 24, 2006**, produce all documents concerning any licenses, settlement agreements, covenants not to sue, or any other agreements concerning either or both of the patents at issue. As the parties have not yet entered into a protective order in this case, the court adopts Cablevision's suggestion that all materials produced pursuant to this order be kept on an "outside counsel eyes only" basis. The parties are free to incorporate additional language on the use of these materials as they prepare the protective order.

Dated: Central Islip, New York
April 14, 2006

SO ORDERED:

/s/ William D. Wall
WILLIAM D. WALL
United States Magistrate Judge

UNITED STATES DISTRICT COURT
EASTERN DISTRICT OF NEW YORK
----------X
RATES TECHNOLOGY INC.,

Plaintiff,

vs.

ORDER
05-CV-3583 (DRH) (WDW)

CABLEVISION SYSTEMS CORP.,

Defendant.
----------X

A P P E A R A N C E S :

BURKE, WILLIAMS & SORENSEN LLP
Attorney for Plaintiff
444 South Flower Street, Suite 2400
Los Angeles, CA 90071
By: James B. Hicks, Esq.

GOODWIN PROCTOR LLP
Attorney for Defendant
599 Lexington Avenue
New York, NY 10022
By: Benjamin Hershkowitz, Esq.

HURLEY, Senior District Judge:

BACKGROUND

I. ***Procedural Background***

Plaintiff Rates Technology Inc. ("Plaintiff") filed this patent infringement case on July 29, 2005, alleging, inter alia, that the sale of Optimum Voice, Optimum Online VoIP and voice messaging services by Cablevision Systems Corp. ("Defendant") infringed upon two of Plaintiff's patents. Plaintiff seeks actual damages in the amount of $950 million and requests trebling to $2.85 billion under 35 U.S.C. § 284.

On April 11, 2006, Defendant filed a motion to compel responses to document demands and interrogatories. Specifically, Defendant sought an order directing Plaintiff to produce any

licenses, settlement agreements, covenants not to sue, and other agreements between the Plaintiff and various non-parties concerning both of the patents at issue in this case. Plaintiff opposed the motion, primarily on the ground that discovery of such information would ultimately be inadmissible under Federal Rule of Evidence ("FRE") 408.

A. *The Magistrate Judge's Order*

On April 14, 2006, Magistrate Judge William D. Wall granted Defendant's motion, finding that "the materials sought are discoverable in that they may lead to the discovery of admissible evidence, and [Plaintiff's] reliance on FRE 408 is, at best, premature." (Apr. 14, 2006 Order at 2.) The order provides in pertinent part as follows:

> During the course of this litigation, [Plaintiff] has bolstered its claims that its patents are universally accepted by stating that "over 120 companies have been covered under" the patents, and that [Plaintiff] has only had to litigate patent infringement claims "approximately 25 times out of some 740 covered companies." Having raised this information to its benefit, [Plaintiff] now seeks to bar inquiry into how or why those companies were "covered." Simply put, RTI cannot have it both ways.
>
> The court takes no position on whether the information sought will be admissible at trial. FRE 408 states, in part, that evidence [of] accepting "valuable consideration in compromising or attempting to compromise a claim which was disputed as to either validity or amount, is not admissible to prove liability for or invalidity of the claim or its amount." In its opposition papers, [Plaintiff] repeatedly asserts that its agreements with non-parties are settlements and not licenses. Prior communications from RTI, however, characterize the agreements somewhat differently: "[o]ur past 'licensing' practice has been to grant Covenant Not To Sue ('CNS') agreements and not formal licenses, in exchange for one-time payments." It is possible that the documents at issue wouldn't be considered settlement materials under FRE 408. Since discovery is ongoing and the question of admissibility is not currently before the court, it is premature to make a determination as to the nature of [Plaintiff's] other "agreements."

(*Id.* at 2-3.) Judge Wall directed Plaintiff to produce any licenses, settlement agreements,

covenants not to sue, and other agreements between Plaintiff and various non-parties concerning both of the patents at issue.

B. ***This Court's October 20, 2006 Order***

Plaintiff appealed Judge Wall's decision to this Court. By Memorandum of Decision and Order dated October 20, 2006 (the "October 20, 2006 Order"), the Court affirmed Judge Wall's Order in its entirety and gave Plaintiff ten days to produce the relevant documents. Finding that Judge Wall's Order was neither clearly erroneous nor contrary to law, the Court stated:

> The premise of Plaintiff's objection – that these documents will be inadmissible at trial pursuant to FRE 408 – is, as Judge Wall correctly pointed out, premature and irrelevant to the question of discoverability before the Court. While Rule 408 of the Federal Rules of Evidence limits the introduction at trial of evidence regarding settlement negotiations, this rule does not itself govern discovery. Instead, settlement agreements are governed by Rule 26, which allows discovery thereof so long as such disclosure "appears reasonably calculated to lead to the discovery of admissible evidence." Fed. R. Civ. P. 26(b)(1).

(*Id.* at 5 (citations and internal quotation marks omitted).) Thus, even assuming that the documents at issue could be classified as settlement agreements, they would still be subject to discovery so long as Federal Rule of Civil Procedure ("Rule") 26 was satisfied. Here, that condition was met because in the patent context, "settlement of patent litigation may be functionally identical to a license." (*Id.* at 6 (citations and internal quotation marks omitted).) As the Court further explained:

> [I]n "settling" claims with alleged infringers, it is of no import that Plaintiff may have styled its agreements as "covenants not to sue" rather than licenses because in the patent context, "[a] license may amount to no more than a covenant by the patentee not to sue the licensee for making, using or selling the patented invention." *Ortho Pharm. Corp. v. Genetics Inst. Inc.*, 52 F.3d 1026, 1031 (Fed. Cir. 1995).

(*Id.* at 6.) Thus, regardless of their classification, to the extent these agreements reflect the industry's acquiescence to Plaintiff's patents, they may be relevant to show the validity thereof.[1] (*Id.* n.1) Accordingly, the Court found that they may lead to the discovery of admissible evidence and were discoverable.

In the October 20, 2006 Order, the Court also rejected Plaintiff's argument that public policy concerns dictated that the documents, if settlement agreements, remain confidential. (*See id.* at 8 ("[A]lthough the Sixth Circuit may have recognized a settlement privilege under federal law, other 'courts have generally declined to recognize a privilege that would preclude discovery for the purpose of settlements or settlement negotiations,'" *Newman & Assocs. v. J.K. Harris & Co., LLC*, No. 04CV9264, 2005 WL 3610140, at *2 (S.D.N.Y. Dec. 15, 2005) (collecting cases), including the lower courts in this Circuit as well as other Circuit Courts of Appeals.").)

C. *Plaintiff's Subsequent Applications*

Thereafter, Plaintiff moved for certification of this Court's October 20, 2006 Order so that it could seek an interlocutory appeal pursuant to 28 U.S.C. § 1292(b). Plaintiff also sought a stay of the October 20, 2006 Order. Plaintiff argued:

> [W]hen [Plaintiff] entered into confidential settlements, it promised the other parties that it would keep those settlements confidential – indeed, often at the other's party demand. [Plaintiff] won't break its promises, especially since the Magistrate's April 14 Order is flat-out wrong . . . and [Plaintiff] would rather face terminating sanctions, and see this case dismissed, then produce confidential settlements in violation of its constitutional contract rights . . . .

(Letter by James B. Hicks, dated Oct. 24, 2006, at 1.)

---

[1] Notably, Plaintiff itself at one point characterized the agreements as licenses. (Apr. 14, 2006 Order at 2.)

By Order dated November 16, 2006, the Court denied Plaintiff's application and extended the time within which Plaintiff was to produce the relevant documents to December 1, 2006. That same day, Plaintiff submitted a second application to stay production of the documents, asserting that "Magistrate Wall's underlying order and this Court's October 20 and November 16 Orders are invalid." (Letter by James B. Hicks, dated Nov. 16, 2006, at 1.) Plaintiff repeated its intention not "to produce these documents, even if this case is dismissed as a result." (*Id.* at 2.)

By Order dated November 17, 2006, the Court directed Defendant to respond to Plaintiff's most recent application. The Court noted that because it intended "to move promptly on this matter, no stay [would] be granted at this time." (Nov. 17, 2006 Order.) Defendant responded by letter dated November 21, 2006, and Plaintiff replied by letter dated November 27, 2006.

By Order dated November 30, 2006, the Court found that none of Plaintiff's arguments had "any merit" and denied Plaintiff's request for a stay. (Nov. 30, 2006 Order at 2, 3.) Plaintiff was directed to produce all documents concerning any licenses, settlement agreements, covenants not to sue, or any other agreements concerning either or both of the patents at issue, on an "attorneys' eyes only" basis, on or before December 11, 2006. The Court noted that "[s]hould Plaintiff indicate to the Court that it will not comply with this Order, Defendant shall promptly advise the Court how it wishes to proceed." (*Id.* at 3.)

D. ***The Current Application***

By letter dated December 5, 2006, Plaintiff "respectfully note[d] that the orders requiring it to produce these documents are defective" and indicated that "it does not intend to produce those settlement agreements, even if this case is dismissed as a result." (Letter by James B.

Hicks, dated Dec. 5, 2006, at 1, 2.) By letter dated December 8, 2006, Defendant responded by moving for a dismissal of Plaintiff's claims with prejudice and an award of attorneys' fees and costs. (Letter by Benjamin Hershkowitz, dated Dec. 8, 2006, at 1.) In a footnote, Defendant also noted that under Rule 37(b)(2)(A), "the Court would be justified in light of [Plaintiff's] failure to produce, . . . for example, take as established that: (1) [Defendant's] suppliers are licensed and that [Defendant] is entitled to the benefit of those licenses; (2) that the license agreements do not support [Plaintiff's] damages theories; and (3) that [Plaintiff] cannot rely on secondary considerations to refute [Defendant's] obviousness defense." (*Id.* at 4 n.4.)

Plaintiff responded by stating that though it was aware that the Court would likely dismiss its case for refusing to produce the documents, it objected to Defendant's request for monetary sanctions because Plaintiff's refusal to comply with the various orders was "substantially justified." (Letter by James B. Hicks, dated Dec. 12, 2006, at 1, 2.) Plaintiff also objected to Defendant's suggestion that the Court take certain facts as established based upon Plaintiff' failure to produce the agreements. Finally, Plaintiff argued that if the Court did dismiss Plaintiff's complaint, it should also dismiss Defendant's counterclaim for declaratory relief as moot. (*Id.* at 1.)

By letter dated December 15, 2006, Defendant reiterated its request for monetary sanctions and for findings of fact in its favor. (Letter by Benjamin Hershkowitz, dated Dec. 15, 2006, at 1.) In addition, Defendant, for the first time, explicitly requested that the Court take the facts supporting its counterclaims as established. (*Id.*)

Plaintiff wrote a final letter on December 18, 2006, objecting to Defendant's request for judgment on its counterclaim as untimely, as Defendant "never requested such sanctions before." (Letter by James B. Hicks, dated Dec. 18, 2006, at 1.) In addition, Plaintiff "ask[ed] the Court to

dismiss its claims with prejudice if that is the necessary alternative to being forced to produce confidential settlements to untrustworthy adverse counsel." (*Id.* at 2.)

For the reasons stated below, the Court dismisses Plaintiff's claims with prejudice, declines to take facts supporting Defendant's counterclaims as established, and finds that Defendant is entitled to an award of attorneys' fees in an amount to be subsequently determined.

DISCUSSION

I. *Plaintiff's Claims are Dismissed Pursuant to Rule 37(b)(2)(C)*

Rule 37 provides in pertinent part as follows:

> If a party . . . fails to obey an order to provide or permit discovery, . . . the court in which the action is pending may make such orders in regard to the failure as are just, and among others the following: . . . .
>
> > (C) An order . . . dismissing the action or proceeding . . . .

Fed. R. Civ. P. 37(b)(2) (C). The imposition of sanctions under Rule 37 lies within the broad discretion of the district court. *See, e.g., Corporation of Lloyd's v. Lloyd's U.S.*, 831 F.2d 33, 36 (2d Cir. 1987). "[D]ismissal with prejudice is a harsh remedy to be used only in extreme situations, and then only when a court finds willfulness, bad faith, or any fault on the part of the [sanctioned party]." *Bobal v. Rensselaer Polytechnic Inst.*, 916 F.2d 759, 764 (2d Cir. 1990) (citations and internal quotation marks omitted). As the Supreme Court has noted, however, "the most severe in the spectrum of sanctions provided by statute or rule must be available to the district court in appropriate cases, not merely to penalize those whose conduct may be deemed to warrant such a sanction, but to deter those who might be tempted to such conduct in the absence of such a deterrent." *National Hockey League v. Metropolitan Hockey Club, Inc.*, 427 U.S. 639, 643 (1976); *see also Update Art, Inc. v. Modiin Pub., Ltd.*, 843 F.2d 67, 73 (2d Cir. 1988)

(affirming magistrate judge's decision to award summary judgment against party who failed to comply with discovery orders: "[W]e wish to emphasize the importance we place on a party's compliance with discovery orders. Such compliance is necessary to the integrity of our judicial process. A party who flouts such orders does so at his peril. If one suggests that our decision today is strong medicine, that is precisely what it is intended to be.").

The record in this case demonstrates Plaintiff's sustained and wilful refusal to comply with multiple court orders to produce the agreements at issue based upon Plaintiff's belief that the orders are "flat-out wrong" and "invalid." Such blatant disregard for the rules and procedures of this Court clearly demonstrates willfulness and bad faith. Accordingly, the Court finds that dismissal of Plaintiff's claims with prejudice is warranted under Rule 37.[2]

II. *Defendant's Counterclaims Rule 37(b)(2)(A)*

A. *The Counterclaims are not Dismissed for Lack of Subject Matter Jurisdiction*

Defendants' Answer asserts four counterclaims, to wit: (1) declaratory judgment that Defendant has not infringed upon Plaintiff's patents; (2) declaratory judgment that Plaintiff's patents are invalid; (3) declaratory judgment that Plaintiff's patents are unenforceable due to inequitable conduct; and (4) declaratory judgment that Plaintiff is barred from maintaining this action under the doctrine of unclean hands. Plaintiff moves for dismissal of Defendant's counterclaims, arguing that should the Court dismiss Plaintiff's complaint with prejudice, Defendant's counterclaims will be moot and the Court will lack subject matter jurisdiction over them pursuant to *Super Sack Mfg. Corp. v. Chase Packaging Corp.*, 57 F.3d 1054 (Fed. Cir.

---

[2] Plaintiff cannot claim that it is unfairly surprised by the Court's dismissal of its claims as Plaintiff has repeatedly petitioned for such relief as an alternative to being required to produce the documents.

1995).

In *Super Sack*, the Federal Circuit held that a patentee's promise not to "assert the patent at issue against the putative infringer with respect to any of its past, present, or future acts" divests the court of jurisdiction over the case. *Id.* at 1058. The court reasoned that the patentee's covenant not to sue resolved the actual controversy between the parties, i.e., the question of infringement of the actual patent, such that the court no longer had jurisdiction to hear a declaratory judgment action regarding the validity or enforceability of the patent. *Id.*

Here, Plaintiff has not filed a covenant not to sue Defendant for infringement based upon its patents. Moreover, although this Court has dismissed Plaintiff's claims with prejudice, Plaintiff has "reserve[d] its right to appeal a dismissal." (Letter by James B. Hicks, dated Dec. 12, 2006, at 1 n.1.) Thus, as opposed to the circumstances present in *Super Sack*, where the patentee was "forever estopped . . . from asserting liability against" the alleged infringer and thus had no "reasonable apprehension that it [would] face an infringement suit," 57 F.3d at 1059, the possibility of suit against Defendant has not been permanently foreclosed. Accordingly, based on the argument proffered, the Court declines to dismiss Defendant's counterclaims for lack of subject matter jurisdiction.

B. *The Court Declines to Award Judgment to Defendant on its Counterclaims*

Rule 37(b)(2)(A) provides that if a party fails to obey a discovery order, the Court may issue "[a]n order that the matters regarding which the order was made or any other designated facts shall be taken to be established for the purposes of the action in accordance with the claim of the party obtaining the order." As noted above, by Order dated November 30, 2006, the Court directed Defendant to "promptly advise the Court how it wishe[d] to proceed" with regard to Plaintiff's failure to produce the documents. Defendant responded by moving for dismissal of

Plaintiff's claims with prejudice and an award of attorneys' fees and costs. In a footnote, Defendant noted that the Court would "also be justified" in taking certain facts as established pursuant to Rule 37(b)(2)(A). It was not until Plaintiff responded, by letter dated December 12, 2006, and requested dismissal of Defendants' counterclaim, that Defendant explicitly moved the Court to "take facts supporting [its] counterclaims as established." (*See* Letter by Benjamin Hershkowitz, dated Dec. 15, 2006, at 1.)

In the Court's view, Defendant's sparsely-worded letter application has not satisfactorily explained why this Court, in the exercise of its discretion, should grant Defendant's request. Essentially, Defendant asks this Court to take as established that its suppliers are covered under the unproduced licenses and that Defendant is therefore entitled to the benefit thereof. Such a factual finding would effectively result in judgment in Defendant's favor on its first counterclaim that it has not infringed upon Plaintiff's patents. The Court has already found that Plaintiff is not entitled to the affirmative relief it seeks in its Complaint based upon its discovery violations. Defendant now asks the Court to go one step further and find that Defendant's position is correct. At this juncture, and based upon the papers submitted, the Court declines to do so. Accordingly, Defendant's application to take facts supporting its counterclaims as established pursuant to Rule 37(b)(2)(A) is denied.

C. ***Attorneys' Fees***

Defendant moves for an award of attorneys' fees under Rule 37(b), which provides, in pertinent part:

> In lieu of any of the foregoing orders or in addition thereto, the court shall require the party failing to obey the order or the attorney advising that party or both to pay the reasonable expenses, including attorney's fees, caused by the failure, unless the court finds that the failure was substantially justified or that other

circumstances make an award of expenses unjust.

Fed. R. Civ. P. 37(b). Plaintiff's opposition to such an award is twofold. First, Plaintiff argues that its resistance was "substantially justified." Next, Plaintiff raises due process objections, claiming that Defendant failed to provide it with sufficient notice and that Plaintiff has not had an adequate opportunity to respond.

Plaintiff's first objection is easily disposed of. The Court has repeatedly found that Plaintiff's position has no merit because even if the documents at issue could be characterized as settlement agreements, they are still subject to discovery pursuant to Rule 26. Plaintiff's refusal to comply with these orders based upon its opinion that they are "invalid" cannot be countenanced. Accordingly, the Court finds that Plaintiff has not offered adequate justification for its conduct.

As for Plaintiff's due process argument, the Court notes that "[a]s a general rule, a court is not obliged to give a formal warning that sanctions might be imposed for violation of the court's orders." *Fonar Corp. v. Magnetic Resonance Plus, Inc.*, 128 F.3d 99, 102 (2d Cir. 1997). Further, because Defendant brought its sanctions application under Rule 37, which expressly provides that the Court "shall" impose monetary sanctions under specified circumstances, Plaintiff clearly had notice of the possibility of such sanctions. *See id.* Accordingly, the Court finds that an award of attorneys' fees is warranted in this case. Nonetheless, given Defendant's complete failure to support its fee application with *any* specifics, including what fees it is seeking, for what work, at what hourly rate, etc., the Court cannot make a fee determination on the present record. Accordingly, this matter is respectfully referred to Magistrate Judge Wall for a report and recommendation on the proper amount of attorneys' fees to be awarded.

CONCLUSION

For the foregoing reasons, the Court So Orders the following relief: (1) Defendant's application to dismiss Plaintiff's claims with prejudice pursuant to Rule 37(b)(2)(C) is granted; (2) Defendant's application to take facts supporting its counterclaims as established pursuant to Rule 37(b)(2)(A) is denied; and (3) Defendant's application for attorneys' fees is granted and the matter is respectfully referred to Magistrate Judge Wall for a report and recommendation on the proper amount of attorneys' fees to be awarded.

Plaintiff is directed to advise the Court what effect, if any, this decision has on its pending magistrate judge appeal, docket number 79.

SO ORDERED.

Dated: April 20, 2007
Central Islip, New York

/s
Denis R. Hurley
United States District Judge

Exhibit K

Civil Action No. 07-441 JJF

UNITED STATES PATENT AND TRADEMARK OFFICE

UNITED STATES DEPARTMENT OF COMMERCE
United States Patent and Trademark Office
Address: COMMISSIONER FOR PATENTS
P.O. Box 1450
Alexandria, Virginia 22313-1450
www.uspto.gov

APPLICATION NO.	FILING DATE	FIRST NAMED INVENTOR	ATTORNEY DOCKET NO.	CONFIRMATION NO.
90/007,939	02/14/2006	5425085	61749/4	9558

7590 05/21/2007

EXAMINER	
ART UNIT	PAPER NUMBER

Robert L. Epstein ESQ.
EPSTEIN DRANGEL BAZERMAN & JAMES LLP
60 East 42nd St.
Suite 820
New York, NY 10165

DATE MAILED: 05/21/2007

Please find below and/or attached an Office communication concerning this application or proceeding.

UNITED STATES PATENT AND TRADEMARK OFFICE

Commissioner for Patents
United States Patent and Trademark Office
P.O. Box 1450
Alexandria, VA 22313-1450
www.uspto.gov

DO NOT USE IN PALM PRINTER

(THIRD PARTY REQUESTER'S CORRESPONDENCE ADDRESS)

Kory D. Christensen
STOEL RIVES LLP
201 South Main St. One Utah Center Suite 1100
Salt Lake City, UT 84111

EX PARTE REEXAMINATION COMMUNICATION TRANSMITTAL FORM

REEXAMINATION CONTROL NO. *90/007,939*.

PATENT NO. *5425085*.

ART UNIT *3992*.

Enclosed is a copy of the latest communication from the United States Patent and Trademark Office in the above identified *ex parte* reexamination proceeding (37 CFR 1.550(f)).

Where this copy is supplied after the reply by requester, 37 CFR 1.535, or the time for filing a reply has passed, no submission on behalf of the *ex parte* reexamination requester will be acknowledged or considered (37 CFR 1.550(g)).

Ex Parte Reexamination Communication	**Control No.** 90/007,939	**Patent Under Reexamination** 5425085	
	Examiner Joseph R. Pokrzywa	**Art Unit** 3992	

A SHORTENED STATUTORY PERIOD FOR RESPONSE TO THIS ACTION IS SET TO EXPIRE 2 MONTH(S) FROM THE MAILING DATE OF THIS LETTER. EXTENSIONS OF TIME ARE GOVERNED BY 37 CFR 1.550(c). If the specified period for response is less than thirty (30) days, a response within the statutory minimum of thirty (30) days will be considered timely.

Joseph R. Pokrzywa
Primary Examiner
Art Unit: 3992

cc: Requester (if third party requester)

Office Action in Ex Parte Reexamination	Control No. 90/007,939	Patent Under Reexamination 5425085	
	Examiner Joseph R. Pokrzywa	Art Unit 3992	

-- *The MAILING DATE of this communication appears on the cover sheet with the correspondence address* --

a☐ Responsive to the communication(s) filed on _____. b☐ This action is made FINAL.
c☐ A statement under 37 CFR 1.530 has not been received from the patent owner.

A shortened statutory period for response to this action is set to expire 2 month(s) from the mailing date of this letter. Failure to respond within the period for response will result in termination of the proceeding and issuance of an *ex parte* reexamination certificate in accordance with this action. 37 CFR 1.550(d). **EXTENSIONS OF TIME ARE GOVERNED BY 37 CFR 1.550(c).** If the period for response specified above is less than thirty (30) days, a response within the statutory minimum of thirty (30) days will be considered timely.

Part I THE FOLLOWING ATTACHMENT(S) ARE PART OF THIS ACTION:

1. ☐ Notice of References Cited by Examiner, PTO-892.
2. ☒ Information Disclosure Statement, PTO/SB/08.
3. ☐ Interview Summary, PTO-474.
4. ☐ _____.

Part II SUMMARY OF ACTION

1a. ☒ Claims *1-26* are subject to reexamination.
1b. ☐ Claims _____ are not subject to reexamination.
2. ☐ Claims _____ have been canceled in the present reexamination proceeding.
3. ☒ Claims *6 and 17* are patentable and/or confirmed.
4. ☒ Claims *1-5, 7-16 and 18-26* are rejected.
5. ☐ Claims _____ are objected to.
6. ☐ The drawings, filed on _____ are acceptable.
7. ☐ The proposed drawing correction, filed on _____ has been (7a)☐ approved (7b)☐ disapproved.
8. ☐ Acknowledgment is made of the priority claim under 35 U.S.C. § 119(a)-(d) or (f).
   a)☐ All b)☐ Some* c)☐ None of the certified copies have
   1☐ been received.
   2☐ not been received.
   3☐ been filed in Application No. _____.
   4☐ been filed in reexamination Control No. _____.
   5☐ been received by the International Bureau in PCT application No. _____.
   * See the attached detailed Office action for a list of the certified copies not received.
9. ☐ Since the proceeding appears to be in condition for issuance of an *ex parte* reexamination certificate except for formal matters, prosecution as to the merits is closed in accordance with the practice under *Ex parte* Quayle, 1935 C.D. 11, 453 O.G. 213.
10. ☐ Other: _____

Joseph R. Pokrzywa

JOSEPH R. POKRZYWA
PRIMARY EXAMINER

cc: Requester (if third party requester)

DETAILED ACTION

Reexamination

1. **Claims 1-26** of U.S. Patent 5,425,085 (hereafter "the '085 Patent") are subject to reexamination.

2. Upon reviewing the previous reexamination proceeding for the '085 Patent (noted as Reexamination Control No. 90/005,472), declarations under 37 C.F.R. 1.131 were submitted to overcome the prior art rejection of clams 1-26, being cited under 35 U.S.C.103 as being unpatentable over Azar (U.S. Patent No. 5,799,071) in view of Berenato (U.S. Patent No. 5,400,395), both of which were included in the Information Disclosure Statement dated 9/8/06 in the present proceeding, whereby the declarations demonstrated the completion of the subject invention prior to the filing date of both references, with the earlier noted as Azar, being Oct. 5, 1992.

3. With this, it appears that the proposed rejection of the instant claims 1-5, 7-10, and 13 of the '085 Patent by the reference titled "Strata DK8 & DK16: Digital Key Telephone System General Description", published by Toshiba and dated March 1993 (referred to as "Toshiba"), would not be considered as prior art, according to the date of Oct. 5, 1992, referred to in the declarations. Since the '085 Patent was filed on March 18, 1994, a reference published one year before the application for a patent will be a statutory bar under 35 U.S.C. 102(b) and thus cannot be overcome by an affidavit or declaration under 37 CFR 1.131. However, the Toshiba reference

is dated "March 1993", and with no other indication of a specific date present, the date of March 31, 1993 will be utilized as the publication date. With this, the Toshiba reference was not published over one year before the filing of the '085 Patent, and with the above noted declarations, would not be considered as prior art. Thus, the rejection proposed by the Third Party Requester of claims 1-5, 7-10, and 13 over the reference of Toshiba, is not adopted in this action.

Information Disclosure Statement

4. The references listed in the Information Disclosure Statements (IDS) submitted on 6/22/06, 9/8/06, and 9/22/06 have been considered by the examiner, with one exception. The reference of the article from the IDS dated 9/8/06 titled "Discount Long Distance Digest", was not considered, as this article was published after the filing date of the '085 Patent, and is thus not considered as prior art (see attached PTO-SB/08's).

Claim Rejections - 35 USC § 102

5. The following is a quotation of the appropriate paragraphs of 35 U.S.C. 102 that form the basis for the rejections under this section made in this Office action:

> A person shall be entitled to a patent unless –
>
> (b) the invention was patented or described in a printed publication in this or a foreign country or in public use or on sale in this country, more than one year prior to the date of application for patent in the United States.

6. **Claims 1-5, 7-10, and 13** are rejected under 35 U.S.C. 102(b) as being anticipated by "Starplus SPX: General Description Installation and Maintenance Manual", published by Vodavi Communication Systems, dated September 1990 (hereafter "Vodavi").

Regarding ***claim 1***, Vodavi discloses a device for routing telephone calls along a least cost route originating from a first telephone to a second telephone having an associated telephone number via a network having a plurality of alternate communication switch paths corresponding to different carriers which can be chosen to route the call and normally providing a current to said first telephone when said first telephone is in use [see page 200-8; also see page 300-5; also see page 320-13; also see page 500-18], comprising

a housing forming an enclosure and comprising first jack means for connection to said first telephone and second jack means for connection to said network [see pages 400-2 and 500-2, being the "Basic Cabinet"; also see pages 400-5 through 400-11; also see page 500-16],

switch means operatively connected to said first jack means for disconnecting said first telephone from said network [see page 100-1; also see pages 400-5 through 400-11; also see page 500-16],

means operatively connected to said switch means for generating a current through said switch means to the first telephone, corresponding to a current provided by said network [see pages 410-1 through 410-2; also see page 500-16],

database means for storing billing rate parameters for determining a least cost communication path for call corresponding to said telephone number [see page 200-8; also see page 300-5, wherein "In order for the LCR to operate, the LCR feature must be activated in the

system and the routing data must be entered into the database."; also see pages 660-1 through 660-28, for instance page 660-16, wherein "This command allows the user to add route lists for LCR use to the system. There are sixteen route lists in the system. Each route can have four different time period entries. In each time period, eight trunk groups can have different priority numbers and can reference different insert and delete tables."],

means operatively connected to said switch means for detecting and storing said telephone number originating from the first telephone means for addressing said database means for identifying a plurality of communication switch paths to said second telephone and the cost rate of each path [see page 300-5; also see page 400-5; also see pages 660-1 through 660-28],

means for comparing the cost rate of each path so as to determine a least cost route [see page 200-8, wherein "The trunk groups within each route list entry may be ordered so that the most economical group will be the first choice, the second most economical group is the second choice, etc."; also see page 300-5], and

means operatively connected to said switch means and said second jack means for generating a number sequence corresponding to a desired carrier so that said call is routed through said second jack means to the selected communication path and carrier to establish a switched connection between said first telephone and said second telephone phone [see page 200-8; also see page 300-5, wherein "The dialed digits (or modified dialed digits) are outpulsed on the trunk."].

Regarding ***claim 2***, Vodavi discloses the device discussed above in claim 1, and further teaches that said least cost communication path parameters include the time and date of the call [see page 300-5].

Regarding ***claim 3***, Vodavi discloses the device discussed above in claim 1, and further teaches that said switch means connects said first telephone to said network during an incoming call [see page 200-4].

Regarding ***claim 4***, Vodavi discloses the device discussed above in claim 1, and further teaches that an internal power supply connected to said means for generating a current [see Figure 400.1 on page 400-2].

Regarding ***claim 5***, Vodavi discloses the device discussed above in claim 1, and further teaches that said means for generating said number sequence comprises a dual tone multifrequency generator [see page 400-5].

Regarding ***claim 7***, Vodavi discloses the device discussed above in claim 1, and further teaches that said detecting means includes a dual tone multifrequency detector [see page 400-5].

Regarding ***claim 8***, Vodavi discloses the device discussed above in claim 1, and further teaches of means for maintaining the time and date so as to determine the least cost route based on the time and date of the call [see pages 200.11, 230-2, and 300-5].

Regarding ***claim 9***, Vodavi discloses the device discussed above in claim 1, and further teaches that said cost may be given a bias for preference to a given carrier [see page 620-43, being the priority level].

Regarding ***claim 10***, Vodavi discloses the device discussed above in claim 1, and further teaches of means for updating said database means with a current billing rate schedule [see pages 600-1 and 660-1 through 660-28].

Regarding ***claim 13***, Vodavi discloses the device discussed above in claim 10, and further teaches that said update means includes a modem for receiving signals through said telephone line and downloading the update information [see Figure 400.4 on page 400-5, being the "Modem Unit"; also see pages 400-19 and 600-1].

7. **Claims 1-5, 7-10, 13-16, 18, 19, and 22-26** are rejected under 35 U.S.C. 102(b) as being anticipated by the publication "ISOETEC System/228: Technical Manual", published by ISOETEC Communications, Inc. and dated July 1998 (hereafter "Isoetec").

Regarding ***claim 1***, Isoetec discloses a device for routing telephone calls along a least cost route originating from a first telephone to a second telephone having an associated telephone number via a network having a plurality of alternate communication switch paths corresponding to different carriers which can be chosen to route the call and normally providing a current to

said first telephone when said first telephone is in use [see section 1.5 on page 1.18; also see sections 10.1 and 10.2 on pages 10.1-10.3; also see section 10.6 on page 10.4], comprising

a housing forming an enclosure [228 Cabinet with the Main Distribution Frame (MDF) on page 2.7 (Figure 2-1) and page 3.2 (Figure 3-1)] and comprising first jack means for connection to said first telephone and second jack means for connection to said network [see pages 1.2 and 1.5-1.15; also see pages 3.6-3.9; also see sections 3.6-3.9 on pages 3.20-3.23],

switch means operatively connected to said first jack means for disconnecting said first telephone from said network [see pages 1.5-1.15; also see sections 3.6-3.9 on pages 3.20-3.23; also see pages 4.131 and 4.146],

means operatively connected to said switch means for generating a current through said switch means to the first telephone, corresponding to a current provided by said network [see pages 1.5-1.16; also see sections 3.6-3.9 on pages 3.20-3.23],

database means for storing billing rate parameters for determining a least cost communication path for call corresponding to said telephone number [see page 4.102-4.104; also see pages 10.1-10.6, being the customized LCR Database; also see section 15.2],

means operatively connected to said switch means for detecting and storing said telephone number originating from the first telephone means for addressing said database means for identifying a plurality of communication switch paths to said second telephone and the cost rate of each path [see pages 4.102-4.104; also see Figure 10-1 and pages 10.1-10.6, wherein "This information includes number and types of facilities and services used, and the customer's area code and exchange"; also see pages 4.103, 4.104 and 4.220],

means for comparing the cost rate of each path so as to determine a least cost route [see page 10.1; also see pages 4.102 and 4.103], and

means operatively connected to said switch means and said second jack means for generating a number sequence corresponding to a desired carrier so that said call is routed through said second jack means to the selected communication path and carrier to establish a switched connection between said first telephone and said second telephone phone [see pages 10.1-10.9; also see pages 4.102-4.104].

Regarding ***claim 2***, Isoetec discloses the device discussed above in claim 1, and further teaches that said least cost communication path parameters include the time and date of the call [see pages 10.1-10.9; also see pages 4.102-4.112].

Regarding ***claim 3***, Isoetec discloses the device discussed above in claim 1, and further teaches that said switch means connects said first telephone to said network during an incoming call [see page 1.21; also see pages 4.9-4.15].

Regarding ***claim 4***, Isoetec discloses the device discussed above in claim 1, and further teaches that an internal power supply connected to said means for generating a current [see page 1.16].

Regarding ***claim 5***, Isoetec discloses the device discussed above in claim 1, and further teaches that said means for generating said number sequence comprises a dual tone multifrequency generator [see pages 1.2, 1.8, and 1.15].

Regarding ***claim 7***, Isoetec discloses the device discussed above in claim 1, and further teaches that said detecting means includes a dual tone multifrequency detector [see pages 1.2, 1.8, and 1.15].

Regarding ***claim 8***, Isoetec discloses the device discussed above in claim 1, and further teaches of means for maintaining the time and date so as to determine the least cost route based on the time and date of the call [see pages 10.1-10.9; also see pages 4.102-4.112].

Regarding ***claim 9***, Isoetec discloses the device discussed above in claim 1, and further teaches that said cost may be given a bias for preference to a given carrier [see pages 10.1-10.9; also see pages 4.102-4.112].

Regarding ***claim 10***, Isoetec discloses the device discussed above in claim 1, and further teaches of means for updating said database means with a current billing rate schedule [see pages 10.1-10.9; also see pages 4.102-4.112].

Regarding ***claim 13***, Isoetec discloses the device discussed above in claim 10, and further teaches that said update means includes a modem for receiving signals through said telephone line and downloading the update information [see page 1.24; also see pages 23.1 and 23.19].

Regarding ***claim 14***, Isoetec discloses a device for routing telephone calls along a least cost route originating from a first telephone to a second telephone having an associated telephone number via a network having a plurality of alternate communication switch paths corresponding to different carriers which can be chosen to route the call and normally providing a current to said first telephone when said first telephone is in use [see section 1.5 on page 1.18; also see sections 10.1 and 10.2 on pages 10.1-10.3; also see section 10.6 on page 10.4], comprising

a housing forming an enclosure [228 Cabinet with the Main Distribution Frame (MDF) on page 2.7 (Figure 2-1) and page 3.2 (Figure 3-1)] and comprising first jack means for connection to said first telephone, and second jack means for connection to said network [see pages 1.2 and 1.5-1.15; also see pages 3.6-3.9; also see sections 3.6-3.9 on pages 3.20-3.23],

means positioned on said housing for visibly displaying the time and date [see Figure 1-4 on page 1.5; also see page 2.18; also see page 3.1, being the station port that provides digital data to digital display phones; also see Fig. 3-10 on page 3.16, whereby the I/O Panel, positioned on the housing of the cabinet 228, includes a connection to the monitor; also see page 4.181],

switch means operatively connected to said first jack means for disconnecting said first telephone from said network [see pages 1.5-1.15; also see sections 3.6-3.9 on pages 3.20-3.23; also see pages 4.131 and 4.146],

means operatively connected to said first jack means for disconnecting said first telephone from said network [see pages 1.5-1.15; also see sections 3.6-3.9 on pages 3.20-3.23; also see pages 4.131 and 4.146],

means operatively connected to said switch means for generating a current through said switch means to said first telephone corresponding to said current provided by said network [see page 1.18; also see page 2.4],

means operatively connected to said time and date display means and said switch means for receiving a predetermined dial sequence from said first telephone corresponding to a predetermined date and time to be displayed and means for changing the displayed time and date based on the received signals [see pages 4.79-4.81, whereby return times and return dates are programmed based on DTMF signals from the telephone],

database means for storing billing rate parameters for determining a least cost communication path for a call corresponding to said telephone number, based on such factors as the time and date of the call [see page 4.102-4.104; also see pages 10.1-10.6, being the customized LCR Database; also see section 15.2],

means operatively connected to said switch means for detecting and storing said telephone number originating from the first telephone [see pages 4.102-4.104; also see Figure 10-1 and pages 10.1-10.6, wherein "This information includes number and types of facilities and services used, and the customer's area code and exchange"; also see pages 4.103, 4.104 and 4.220],

means for addressing said database means for identifying a plurality of communication switch paths to said second telephone and the cost rate of each path [see pages 10.1-10.9; also see pages 4.102-4.104],

means for comparing the cost rate of each path so as to determine a least cost route [see pages 10.1-10.9; also see pages 4.102-4.104], and

means operatively connected to said switch means and said second jack means for generating a number sequence corresponding to a desired carrier so that said call is routed through said second jack means to the selected communication path and carrier to establish a switched connection between said first telephone and said second telephone [see pages 10.1-10.9; also see pages 4.102-4.104].

Regarding ***claim 15***, Isoetec discloses the device discussed above in claim 14, and further teaches of means positioned on said housing for manually changing the date and time of the display [see Figure 1-4 on page 1.5; also see page 2.18; also see page 3.1, being the station port that provides digital data to digital display phones; also see page 7.14; also see pages 4.79-4.81, wherein return times and return dates are programmed based on DTMF signals received from the telephone].

Regarding ***claim 16***, Isoetec discloses the device discussed above in claim 14, and further teaches that said means for generating said number sequence comprises a dual tone multifrequency generator [see page 1.8, whereby the 228 system includes a "DTMF tone generator" and a "DTMF tone receiver"; also see pages 4.79-4.81].

Regarding ***claim 18***, Isoetec discloses the device discussed above in claim 14, and further teaches that said detecting means includes a dual tone multifrequency detector [see pages 1.2, 1.8, and 1.15].

Regarding ***claim 19***, Isoetec discloses the device discussed above in claim 14, and further teaches of means for updating said database means with a current billing rate schedule [see pages 10.1-10.9; also see pages 4.102-4.112].

Regarding ***claim 22***, Isoetec discloses the device discussed above in claim 19, and further teaches that said update means includes a modem for receiving signals through said telephone line and downloading the update information [see page 1.24; also see pages 23.1 and 23.19].

Regarding ***claim 23***, Isoetec discloses the device discussed above in claim 14, and further teaches that said cost may be given a bias for preference to a given carrier [see pages 10.1-10.9; also see pages 4.102-4.112].

Regarding ***claim 24***, Isoetec discloses an apparatus for displaying a time quantity which can be initiated from a telephone of the type capable of generating dual tone multifrequency signals [see page 1.8, whereby the 228 system includes a "DTMF tone generator" and a "DTMF tone receiver"; also see pages 4.79-4.81, whereby return times and return dates are programmed based on DTMF signals from the telephone] comprising

a housing forming an enclosure [228 Cabinet with the Main Distribution Frame (MDF) on page 2.7 (Figure 2-1) and page 3.2 (Figure 3-1)] and comprising first jack means for interconnection to said telephone [page 3.6], and second jack means for connection to a telephone switching network [see page 2.4; also see pages 3.8 and 3.9],

said network normally providing a current to said telephone when said telephone is in use [see page 1.18; also see page 2.4],

means positioned on said housing for visibly displaying a time quantity [see Figure 1-4 on page 1.5; also see page 2.18; also see page 3.1, being the station port that provides digital data to digital display phones; also see Fig. 3-10 on page 3.16, whereby the I/O Panel, positioned on the housing of the cabinet 228, includes a connection to the monitor; also see page 4.181],

switch means operatively connected to said first jack means for disconnecting said telephone from said network [see page 1.8; also see page 2.4],

means operatively connected to said switch means for generating a current through said switch means to said telephone corresponding to said current provided by said network [see page 1.16; also see page 2.4],

means operatively connected to said means for displaying a time quantity and said first jack means for receiving said dual tone multifrequency signals, from said telephone when said telephone is disconnected from said network [see page 7.14; also see pages 4.79-4.81, wherein return times and return dates are programmed based on DTMF signals received from the telephone],

said signals corresponding to said time quantity and for changing the displayed time quantity based on signals from said telephone [see pages 4.79-4.81, whereby return times and return dates are programmed based on DTMF signals from the telephone], and

means responsive to a dialing sequence originating on said telephone and operatively connected to said switch means for connecting said telephone to said network [see pages 4.122-4.127].

Regarding ***claim 25***, Isoetec discloses the apparatus discussed above in claim 24, and further teaches that said time quantity is the time of day [see pages 4.79-4.81, whereby return times and return dates are programmed based on DTMF signals from the telephone].

Regarding ***claim 26***, Isoetec discloses the apparatus discussed above in claim 24, and further teaches that said time quantity is the date [see pages 4.79-4.81, whereby return times and return dates are programmed based on DTMF signals from the telephone].

8. **Claims 1, 2, 5, 7, and 10** are rejected under 35 U.S.C. 102(b) as being anticipated by the UK Patent Application No. 2,218,595, with the applicant being STC PLC, being published November 15, 1989 (hereafter "STC'595").

Regarding ***claim 1***, STC'595 discloses a device for routing telephone calls along a least cost route originating from a first telephone to a second telephone having an associated telephone

number via a network having a plurality of alternate communication switch paths corresponding to different carriers which can be chosen to route the call and normally providing a current to said first telephone when said first telephone is in use [see page 4, para. 1], comprising

a housing forming an enclosure and comprising first jack means for connection to said first telephone and second jack means for connection to said network [see Fig. 4, para. 1, wherein "It is housed in a standard box", also wherein "The unit has four telephone connector inlets, one of which connects the box to the line, while the others provide three possible telephone extensions"],

switch means operatively connected to said first jack means for disconnecting said first telephone from said network [see abstract; also see page 2, para. 4 through page 3, para. 4, wherein "switching means responsive to the detection by said monitoring means of the commencement of "dialing" therefrom to connect the network access arrangement between the line and the instrument"; also see page 4, para. 2],

means operatively connected to said switch means for generating a current through said switch means to the first telephone, corresponding to a current provided by said network [see page 4, para. 2, wherein "The telephone during the signaling is powered from the external power supply"],

database means for storing billing rate parameters for determining a least cost communication path for call corresponding to said telephone number [see page 5, para. 2, wherein "A look-up table will be stored…which could have a default data base installed"],

means operatively connected to said switch means for detecting and storing said telephone number originating from the first telephone means for addressing said database means

for identifying a plurality of communication switch paths to said second telephone and the cost rate of each path [see abstract; also see page 2, para. 4],

means for comparing the cost rate of each path so as to determine a least cost route [see page 3, para. 4 through page 4, para. 1, wherein "a device which is connected between the BT line and a telephone, and routes calls to the MCL network when it is cheaper to do so."; also see page 6, para. 3], and

means operatively connected to said switch means and said second jack means for generating a number sequence corresponding to a desired carrier so that said call is routed through said second jack means to the selected communication path and carrier to establish a switched connection between said first telephone and said second telephone phone [see page 3, para. 4 through page 4, para. 1, wherein "a device which is connected between the BT line and a telephone, and routes calls to the MCL network when it is cheaper to do so."; also see page 6, para. 3].

Regarding ***claim 2***, STC'595 discloses the device discussed above in claim 1, and further teaches that said least cost communication path parameters include the time and date of the call [see page 4, para. 1].

Regarding ***claim 5***, STC'595 discloses the device discussed above in claim 1, and further teaches that said means for generating said number sequence comprises a dual tone multifrequency generator [see page 4, para. 3 through page 5, para. 7].

Regarding ***claim 7***, STC'595 discloses the device discussed above in claim 1, and further teaches that said detecting means includes a dual tone multifrequency detector [see page 4, para. 3 through page 5, para. 7].

Regarding ***claim 10***, STC'595 discloses the device discussed above in claim 1, and further teaches of means for updating said database means with a current billing rate schedule [see page 5, para. 2].

9. **Claims 1-5, and 7-11** are rejected under 35 U.S.C. 102(b) as being anticipated by Jabs *et al.* (U.S. Patent Number 5,173,933), issued on Dec. 22, 1992 (hereafter "Jabs").

Regarding ***claim 1***, Jabs discloses a device for routing telephone calls along a least cost route originating from a first telephone to a second telephone having an associated telephone number via a network having a plurality of alternate communication switch paths corresponding to different carriers which can be chosen to route the call and normally providing a current to said first telephone when said first telephone is in use [see col. 4, lines 24-55; also see col. 8, lines 17-19], comprising

a housing forming an enclosure and comprising first jack means for connection to said first telephone and second jack means for connection to said network [see col. 6, lines 34-39; also see col. 8, lines 12-17, whereby the interfaces 108 and 112 are the first jack means and interfaces 100 and 104 are the second jack means]

switch means operatively connected to said first jack means for disconnecting said first telephone from said network [col. 8, lines 24-25],

means operatively connected to said switch means for generating a current through said switch means to the first telephone, corresponding to a current provided by said network [see col. 8, lines 24 and 25; also see col. 9, line 64-col. 10, line 3],

database means for storing billing rate parameters for determining a least cost communication path for call corresponding to said telephone number [col. 6, line 26 and col. 22, lines 49-52; also see col. 12, lines 42 and 43],

means operatively connected to said switch means for detecting and storing said telephone number originating from the first telephone means for addressing said database means for identifying a plurality of communication switch paths to said second telephone and the cost rate of each path [col. 10, lines 7-10; also see col. 2, lines 8-15; also see col. 20, lines 53-55; also see col. 11; also see col. 6, lines 25-30],

means for comparing the cost rate of each path so as to determine a least cost route [see col. 11-col. 12, line 10; also see col. 4, lines 24-28], and

means operatively connected to said switch means and said second jack means for generating a number sequence corresponding to a desired carrier so that said call is routed through said second jack means to the selected communication path and carrier to establish a switched connection between said first telephone and said second telephone phone [col. 4, lines 49-59; also see col. 20, lines 53-55].

Regarding ***claim 2***, Jabs discloses the device discussed above in claim 1, and further teaches that said least cost communication path parameters include the time and date of the call [col. 12, lines 4-6; also see col. 6, lines 53 and 54].

Regarding ***claim 3***, Jabs discloses the device discussed above in claim 1, and further teaches that said switch means connects said first telephone to said network during an incoming call [col. 15, lines 19-32].

Regarding ***claim 4***, Jabs discloses the device discussed above in claim 1, and further teaches that an internal power supply connected to said means for generating a current [col. 6, lines 44-47].

Regarding ***claim 5***, Jabs discloses the device discussed above in claim 1, and further teaches that said means for generating said number sequence comprises a dual tone multifrequency generator [col. 10, lines 7-10; also see cols. 19 and 20].

Regarding ***claim 7***, Jabs discloses the device discussed above in claim 1, and further teaches that said detecting means includes a dual tone multifrequency detector [col. 10, lines 7-10; also see col. 20, lines 20-23].

Regarding ***claim 8***, Jabs discloses the device discussed above in claim 1, and further teaches of means for maintaining the time and date so as to determine the least cost route based on the time and date of the call [col. 6, lines 53-57; also see col. 12, lines 4-6].

Regarding ***claim 9***, Jabs discloses the device discussed above in claim 1, and further teaches that said cost may be given a bias for preference to a given carrier [col. 12, lines 12-15].

Regarding ***claim 10***, Jabs discloses the device discussed above in claim 1, and further teaches of means for updating said database means with a current billing rate schedule [col. 6, lines 25-39].

Regarding ***claim 11***, Jabs discloses the device discussed above in claim 10, and further teaches that said update means includes a circuit board mounted inside said enclosure, and said database means comprises a removable chip on said circuit board, and means for accessing said removable chip from outside said housing [col. 6, lines 26-40].

Claim Rejections - 35 USC § 103

10. The following is a quotation of 35 U.S.C. 103(a) which forms the basis for all obviousness rejections set forth in this Office action:

> (a) A patent may not be obtained though the invention is not identically disclosed or described as set forth in section 102 of this title, if the differences between the subject matter sought to be patented and the prior art are such that the subject matter as a whole would have been obvious at the time the invention was made to a person having ordinary skill in the art to which said subject matter pertains. Patentability shall not be negatived by the manner in which the invention was made.

11. **Claim 12** is rejected under 35 U.S.C. 103(a) as being unpatentable over Jabs *et al.* (U.S. Patent Number 5,425,085 (hereafter "Jabs").

Regarding ***claim 12***, Jabs discloses the device discussed above in claim 11, and further teaches that said means for accessing said removable chip includes a removable cover on said housing for accessing said chip [see col. 6, lines 34-40]. Particularly, Jabs teaches in column 6, lines 34-40, that "Where the interface of the present invention is within a housing, the ability to plug or unplug the external memory cartridge 52 allows for easy upgrading of both tariff information and system code without requiring the opening of such housing or any special programming or erasing equipment." With this, Jabs discloses that accessing of the memory cartridge can be performed by opening the housing. While Jabs prefers the design choice of plugging and unplugging the memory cartridge to the housing, one of ordinary skill in the art would have expected that the alternate design of the device having a removable cover on the housing for accessing the chip, would have performed the same purpose, as even recognized by Jabs. Therefore, it would have been obvious to one of ordinary skill in this art to have the device of Jabs include a removable cover on the housing to access a memory cartridge to obtain the invention as specified in claim 12.

12. **Claims 20 and 21** are rejected under 35 U.S.C. 103(a) as being unpatentable over the publication "ISOETEC System/228: Technical Manual", published by ISOETEC Communications, Inc. and dated July 1998 (hereafter "Isoetec") in view of Jabs *et al.* (U.S. Patent Number 5,425,085 (hereafter "Jabs").

Regarding ***claim 20***, Isoetec discloses the device discussed above in claim 19, and further teaches that said update means includes a circuit board mounted inside said enclosure [see pages 1.5-1.15].

However Isoetec fails to expressly disclose that said database means comprises a removable chip on said circuit board, and means for accessing said removable chip from outside said housing.

Jabs discloses a device that includes an update means having a circuit board mounted inside an enclosure, and a database means that comprises a removable chip on said circuit board, and means for accessing said removable chip from outside said housing [see col. 6, lines 22-40].

Isoetec & Jabs are combinable because they are from the same field of endeavor, being telephone systems having a least cost routing function. At the time of the invention, it would have been obvious to a person of ordinary skill in the art to have a removable chip on the circuit board, as taught by Jabs, in the device of Isoetec. The suggestion/motivation for doing so would have been that a removable chip would allow for easy upgrading of least cost routing data, as recognized by Jabs in column 6, lines 2-40. Therefore, it would have been obvious to combine the teachings of Jabs with the system of Isoetec to obtain the invention as specified in claim 20.

Regarding ***claim 21***, Isoetec and Jabs disclose the device discussed above in claim 20, and Jabs further teaches that said means for accessing said removable chip includes a removable cover on said housing for accessing said chip [see col. 6, lines 34-40]. Particularly, Jabs states in column 6, lines 34-40, that "Where the interface of the present invention is within a housing, the ability to plug or unplug the external memory cartridge 52 allows for easy upgrading of both tariff information and system code without requiring the opening of such housing or any special programming or erasing equipment." With this, Jabs discloses that accessing of the memory cartridge can be performed by opening the housing. While Jabs prefers the design choice of plugging and unplugging the memory cartridge to the housing, one of ordinary skill in the art would have expected that the alternate design of the device having a removable cover on the housing for accessing the chip, would have performed the same purpose, as even recognized by Jabs. As discussed above, it would have been obvious to a person of ordinary skill in the art to have a removable chip on the circuit board, as taught by Jabs, in the device of Isoetec. The suggestion/motivation for doing so would have been that a removable chip would allow for easy upgrading of least cost routing data, as recognized by Jabs in column 6, lines 2-40. Thus, it would have been obvious to one of ordinary skill in this art to have the device of Isoetec and Jabs include a removable cover on the housing to access a memory cartridge to obtain the invention as specified in claim 21.

STATEMENT OF REASONS FOR PATENTABILITY AND/OR CONFIRMATION

13. The following is an examiner's statement of reasons for patentability and/or confirmation of the claims found patentable in this reexamination proceeding:

Claims 6 and 17 are confirmed as patentable.

Specifically, regarding ***claims 6 and 17***, in the examiner's opinion, it would not have been obvious to one of ordinary skill in the art, at the time the invention was made, to have the device, as claimed in claims 1 or 14, respectively, further have the housing substantially cylindrical with opposing ends, and with the first jack means positioned on one end and the second jack means positioned on the opposite end. None of the prior art of record teaches of a least cost device with this structure. Further, the examiner can find no motivation based on the prior art of record that would lead one to construct the claimed devices with this shape for the housing. Particularly, the references of Vodavi and Isoetec teach of telephone systems having least cost routing functions, whereby both references disclose cabinets that contain a plurality of boards. A cylindrical structure would not be desirable in a cabinet such as these, and no motivation is known that would lead one to alter the described devices to have a cylindrical structure with the first jack means positioned on one end and the second jack means positioned on the opposite end. Further, the STC'595 reference states on page 4, lines 4-6, that "It is housed in a standard box, which is double the size of an ordinary dual BT telephone socket." There is no motivation to alter a double-sized ordinary dual British Telecom telephone socket into cylindrical structure. Continuing, the Jabs reference discloses an interface between a plurality of telecommunication stations and a plurality of trunks that link to communication carriers of various media, whereby the interface is adapted for use in an oceangoing vessel. However, there

is no indication that one would desire to have this interface in a substantially cylindrical shape, with a jack means on each of the sides. Thus, the limitations found in claims 6 and 17 are patentable over the prior art of record.

Any comments considered necessary by PATENT OWNER regarding the above statement must be submitted promptly to avoid processing delays. Such submission by the patent owner should be labeled: "Comments on Statement of Reasons for Patentability and/or Confirmation" and will be placed in the reexamination file.

Conclusion

14. Extensions of time under 37 CFR 1.136(a) will not be permitted in these proceedings because the provisions of 37 CFR 1.136 apply only to "an applicant" and not to parties in a reexamination proceeding. Additionally, 35 U.S.C. 305 requires that *ex parte* reexamination proceedings "will be conducted with special dispatch" (37 CFR 1.550(a)). Extensions of time in *ex parte* reexamination proceedings are provided for in 37 CFR 1.550(c).

15. In order to ensure full consideration of any amendments, affidavits or declarations, or other documents as evidence of patentability, such documents must be submitted in response to this Office action. Submissions after the next Office action, which is intended to be a final action, will be governed by the requirements of 37 CFR 1.116, after final rejection and 37 CFR 41.33 after appeal, which will be strictly enforced.

16. The patent owner is reminded of the continuing responsibility under 37 CFR 1.565(a) to apprise the Office of any litigation activity, or other prior or concurrent proceeding, involving Patent No. 5,425,085 throughout the course of this reexamination proceeding.

NOTICE RE PATENT OWNER'S CORRESPONDENCE ADDRESS

Effective May 16, 2007, 37 CFR 1.33(c) has been revised to provide that:

The patent owner's correspondence address for all communications in an *ex parte* reexamination or an *inter partes* reexamination is designated as the correspondence address of the patent.

> *Revisions and Technical Corrections Affecting Requirements for Ex Parte and Inter Partes Reexamination*, 72 FR 18892 (April 16, 2007)(Final Rule)

The correspondence address for any pending reexamination proceeding not having the same correspondence address as that of the patent is, by way of this revision to 37 CFR 1.33(c), automatically changed to that of the patent file as of the effective date.

This change is effective for any reexamination proceeding which is pending before the Office as of May 16, 2007, including the present reexamination proceeding, and to any reexamination proceeding which is filed after that date.

Parties are to take this change into account when filing papers, and direct communications accordingly.

In the event the patent owner's correspondence address listed in the papers (record) for the present proceeding is different from the correspondence address of the patent, it is strongly encouraged that the patent owner affirmatively file a Notification of Change of Correspondence Address in the reexamination proceeding and/or the patent (depending on which address patent owner desires), to conform the address of the proceeding with that of the patent and to clarify the record as to which address should be used for correspondence.

Telephone Numbers for reexamination inquiries:

Reexamination and Amendment Practice	(571) 272-7703
Central Reexam Unit (CRU)	(571) 272-7705
Reexamination Facsimile Transmission No.	(571) 273-9900

17. ALL correspondence relating to this ex parte reexamination proceeding should be directed as follows:

Please mail any communications to:

Attn: Mail Stop "Ex Parte Reexam"
Central Reexamination Unit
Commissioner for Patents
P. O. Box 1450
Alexandria VA 22313-1450

Please FAX any communications to:

(571) 273-9900
Central Reexamination Unit

Please hand-deliver any communications to:

Customer Service Window
Attn: Central Reexamination Unit
Randolph Building, Lobby Level
401 Dulany Street
Alexandria, VA 22314

Any inquiry concerning this communication or earlier communications from the Reexamination Legal Advisor or Examiner, or as to the status of this proceeding, should be directed to the Central Reexamination Unit at telephone number (571) 272-7705.

Signed:

Joseph R. Pokrzywa
Central Reexamination Unit 3992
(571) 272-7410

Conferees :

CRU - Art unit 3992

RQAS

Exhibit L

Civil Action No. 07-441 JJF

MAIL ROOM OCT 27 1994 52 PAT. & TRADEMARK OFF.

#9 GM
Amd'A
11-15-94

RECEIVED
94 NOV -8 PM 12:06
GROUP 260

IN THE UNITED STATES PATENT AND TRADEMARK OFFICE

In Re:	Patent Application of G. WEINBERGER and R. LEE
Serial No.:	08/223,082
Filed:	4/4/94
Title:	METHOD AND SYSTEM FOR UPDATING A CALL RATING DATABASE
Examiner:	Stephen Chin
Art Unit:	2614

New York, New York

RTI-7

COMMISSIONER OF PATENT AND TRADEMARKS
Washington, D.C. 20231

AMENDMENT

Dear Sir:

Responsive to the Office Action dated August 27, 1994, please amend the application as follows:

In the Abstract, line ~~1~~, delete "that",
line ~~3~~, delete "is disclosed".

REMARKS

A new set of drawings has been prepared and is submitted herewith for approval. The comments concerning the Abstract have been noted and appropriate changes made.

Applicants have assigned their rights in this application to Rates Technology Inc. A Power of Attorney from Rates Technology, Inc. to the undersigned is enclosed, along with a copy of the Assignment, the original of which has been forwarded separately to the Assignment Branch for recordation. Further, a Verified Small Entity Status claim form, on behalf of Rates Technology Inc., is submitted.

An Information Disclosure Statement is submitted pursuant 37 CFR 1.97(c), along with the required fee set forth in 37 CFR 1.17(p) of $210.00.

Claims 1-48 have been rejected under 35 U.S.C. Section 102(b) as anticipated by Mincone et al. For the reasons set forth below, reconsideration and withdrawal of this rejection is respectfully requested.

Applicants' claims are directed to a method and system for updating billing rate parameters in the memory of a telephone call rating device. Periodic updating of such parameters is required for accurate cost determination. In Applicants' system, updating of the rate memory is accomplished automatically, that is, without participation by the telephone user or owner, when the system operator determines that updating is required.

At a predetermined time, previously programmed into each station, each station in Applicant's system calls the rate provider. The station, via a modem, identifies itself to the rate provider, for example, by transmitting its telephone number. The time of the last rate memory update of that station is transmitted to the provider. The rate provider determines if a memory update for that station is required. If it is, the updated billing information is transmitted to the station, where it is received and stored. The call in times for the many stations in the system are spaced so as to avoid several stations calling the rate provider at one time.

Mincone teaches a telephone call cost metering device which includes a rate memory. In one emodiment, the rate memory may be programmed with billing data from a remote data bank by means of a modem. However, Mincone does not teach a system capable of automatically updating the information in the rate memories of the stations. Mincone does not teach a system where each station is capable of calling the rate provider at a pre-arranged time. It does not teach a system where each station is capable of identifying itself to the rate provider and indicating the time of its last memory update. There is no determination by the rate provider as to whether updating of the station memory is required.

Mincone, at column 22, describes how the memory can be programmed remotely in the commercial model of his telephone. The

procedure requires the user to call a central computer, identify himself via area code and exchange number and specify the type of service he has contracted. The user then gives the computer operator a list including each long distance number for which he wishes rates to be programmed into his memory. After that, the telephone is placed in the "program" mode and the rate information may be down-loaded from the computer operator into the memory.

The issue of automatic periodic memory updating (as distinct from programming) is not addressed by Mincone. In Mincone, there is simply no capability for automatic period memory updating as all programming of the rate information must be conducted by the user, who decides when and what to program. The user must, each time programming is desired, call the computer operator and go through the procedure described above.

Since Mincone does not provide for automatic memory updating, an individual owner of a Mincone telephone would have to take the time and make the effort necessary to re-program the rate memory every time a rate change occurs with regard to any of the telephone numbers of interest (if the user was aware that a rate change had taken place) in order to have accurate cost determination, even for the limited number of telephone numbers of interest. In todays world, such rate changes are frequent, with many long distance carriers available, each with a variety of rate

schedules. Keeping up could be a full time job for a Mincone telephone owner.

In Mincone, only rates for a few preselected (by the user) telephone numbers are programmed into the memory. Thus, each time a new number is to be called, if cost determination is desired, the rate information for the new number must be programmed, requiring a call to the computer operation. Applicants' system is capable of storing rates applicable to all numbers and automatically updating same. Thus, any call made can be accurately costed, without the user doing anything more than putting the telephone number into the phone.

The Mincone system obviously cannot be employed with public pay telephones. With a public pay telephone, there is no individual who will call the computer operator to program the memory for numbers of interest. There are no repeatedly called numbers to be placed in memory. A user would have to call the computer operator for programming prior to each use, hardly a practical system.

The Mincone programing scheme can not work in a system where thousands of telephones are involved. Without organization and coordination of the call in times, so that many telephones do not call the rate provider at once, jamming of the system seems inevitable.

It should be evident that Mincone does not teach a system which is capable of automatically updating the rate memory in a call cost determining device. It is therefore clear that Applicants' claims are not anticipated.

Specifically, Applicants' claims 1-34 relate to a method for updating a database. Claims 1-22 require the step of connecting the device to the rate provider "at a predetermined time and date". Claims 23-34 require that each subscriber station be "calling at a scheduled time" the rate provider "where the scheduled time for each call is such that the calls from each calling station are substantially spaced apart in time from each other."

Thus, all of the method claims include a limitation as to when updating of the rate memory is to take place. In Mincone, since the call in for programming is user initiated, there is no predetermined or scheduled update time. There certainly is no provision for spacing the calls from subscribers to avoid jamming of the system.

All of the method claims require that the "date and time of the last update of the billing rate parameters" be transmitted to the rate provider, along with identifying information. This aspect is totally lacking in Mincone. Mincone teaches no provision for maintaining or transmitting this type of information.

All of the method claims require the step of "verifying if billing rate parameters should be updated". Mincone does not teach this at all. As noted above, one of the problems with Mincone is that there is no provision for determining if and when the rate memory should be updated.

Claims 35-48 relate to Applicants' call rating updating system. Mincone does not teach a system for updating a rate memory, only a device where programing of the memory with rates for numbers of interest can take place remotely. Claims 35-42 require "means for transmitting ... update information identifying the last update of the billing rate parameters." Claims 43-48 require "means for transmitting information identifying ... the date and time of the last update of the billing rate parameters." Mincone does not keep track of such information nor is it capable of transmitting such information to the computer operator.

Claims 35-42 require "means for verifying if billing rate parameters should be updated." Claims 43-48 require "control means for determining whether the calling party database should be updated." Again, Mincone discloses no means for determining if programming is necessary.

It is therefore clear that Mincone does not anticipate Applicants' claims. Accordingly, reconsideration and withdrawal of the rejection is respectfully requested.

Respectfully submitted,

Robert L. Epstein (Reg. No. 26,451)

JAMES AND FRANKLIN
60 East 42nd Street, Suite 1217
New York, New York 10165
(212) 867-7260

C:\WP51\ROBERT\DOCS\RIT\RIT-7.AME

Exhibit M

Civil Action No. 07-441 JJF

-----Original Message-----
From: Gerald Weinberger [mailto:jerry_weinberger@yahoo.com]
Sent: Thursday, August 23, 2007 5:51 PM
To: DePodesta, John
Cc: RobertL Epstein
Subject: Re: LINGO/ Primus- now or never

Dear John,

This communication is provided as part of settlement discussions and may not be used for any other purpose. Any offer or statement herein is for settlement purposes only, and may not be used as evidence pursuant to Fed. R. Evid. 408 and all similar statutes and legal rules.

Mr. Epstein has reported on his telephone call with Monica Grewal and James Dowd. Had I known that Mr. Dowd would be on the call I would not have authorized Mr. Epstein to attend.

Mr. Epstein reports to me that your attorneys confirmed that the '085 patent is valid, and that your email with the $0 offer was not accurate. It would be a long while before it would be possible for any of the '085 patent claims to be invalidated. It is highly improbable that they will ever be finally invalidated. As to the '769 patent your position that all of the data base updating at all points in the network are done manually is truly absurd, and the only way for us to disprove your bald-faced lie and inaccurate self-serving commentary is to obtain the data base updating information throughout your network in discovery. No IP network could plausibly function call by call with only manual updating. You seem to treat both me and Mr. Epstein as ignorant people, but this in my experience is Mr. Dowd's tact.

Mr. Dowd I am told had suggested that he would recommend a low number to you to settle the case. In view of what RTI and I regard as Primus' and your bad faith business dealings, most recently your egregious and knowingly false statement about the '085 patent claims invalidity, and indeed your total failure to keep your promise to make an offer by last Monday, we have no interest in settlement along those lines. We had held up service so as to consider your Monday offer, and we were prepared to negotiate with you so as to finalize a settlement and avoid a costly time-consuming protracted litigation, but you came back and said $0 as there was nothing that you had to worry about. In essence you at that time said "sue us", as what alternative did you leave us? Did you expect that we would buy into your telling us lies, accept the lies as truth, and say to you thank you we'll just go away? It seems fitting that your own misstatements be the poison which brings down the corporate house. We disagree on the merits; we did not

file a lawsuit against Primus knowing the patent claims were invalid, as you claim that we did. You do your company and its shareholders a great disservice, because you now have to defend in a lawsuit which you claimed on its face could not ever have any merit, and could not ever have an economic downside for Primus. You have been dead wrong about everything, and its now time for RTI to prove its position, and for you to pay the piper. It is all your doing; we had wanted at first only to be fair and to treat Primus in a manner consistent with all of its competitors.

Mr. Dowd I am told suggested that Primus was concerned that it might take patents coverage and the '085 patent would be subsequently invalidated. I said in a recent email to you that many companies since April 10, 2007 (the Re-Ex was filed long before then) have become covered under the RTI patents and each understood the concern you put forward to be foolish.

If prior to our effectuating service upon Primus (this Wednesday) you wish a protection against the future potential invalidity, then I suggest the following:

Primus takes RTI "worldwide" CNS coverage at the full price in effect just before the April 10, 2007 price increases at a price of $5.1 million. RTI will agree that if at any time within the next 21/2 years the '085 patent is finally invalidated that RTI will return all of the $5.1 million, or,

Alternatively, Primus pays pursuant to the terms of the CNS agreement provided to you at the meeting of Monday August 13, 2007, or,

Alternatively, you come out from hiding, stop the oafish deceitful behavior, and you timely finalize a mutually agreeable settlement before service has been effectuated (Wednesday).

Failing your acceptance of any of the above prior to Wednesday August 29, 2007, time being of the essence, RTI will proceed to a finally adjudicated conclusion of the matter.

I have absolutely no patience for your and Mr. Dowd's shenanigans, delays, stalling, stonewalling, deceit and deception. Your ducking again, and your hiding again, and your sending children to do a businessman's job, while precluding me from involvement with your lackeys, is as I said earlier, shooting yourself (Primus) in the foot. You have very much offended me. I find it hard to believe you could have believed what you wrote to me on Monday, especially since no self-respecting patent attorney would ever have told you that the RTI '085 patent claims were invalid, and especially after Mr. Epstein's discussion with, and confirmation from, your two patent attorneys.

RTI will proceed on the merits should we not have finally resolved this by the end of the day Tuesday. I would like to show you how good the patents are, and the best way I can think of is for RTI to win a

full-fledged willful patent infringement case against Primus. That said, please govern your actions accordingly.

Jerry